6–8–95
Vol. 60 No. 110
Pages 30183–30456

federal register

Thursday
June 8, 1995

Briefings on How To Use the Federal Register
For information on briefings in Washington, DC and Boston, MA see announcement on the inside cover of this issue.

FEDERAL REGISTER Published daily, Monday through Friday, (not published on Saturdays, Sundays, or on official holidays), by the Office of the Federal Register, National Archives and Records Administration, Washington, DC 20408, under the Federal Register Act (49 Stat. 500, as amended; 44 U.S.C. Ch. 15) and the regulations of the Administrative Committee of the Federal Register (1 CFR Ch. I). Distribution is made only by the Superintendent of Documents, U.S. Government Printing Office, Washington, DC 20402.

The **Federal Register** provides a uniform system for making available to the public regulations and legal notices issued by Federal agencies. These include Presidential proclamations and Executive Orders and Federal agency documents having general applicability and legal effect, documents required to be published by act of Congress and other Federal agency documents of public interest. Documents are on file for public inspection in the Office of the Federal Register the day before they are published, unless earlier filing is requested by the issuing agency.

The seal of the National Archives and Records Administration authenticates this issue of the **Federal Register** as the official serial publication established under the Federal Register Act. 44 U.S.C. 1507 provides that the contents of the **Federal Register** shall be judicially noticed.

The **Federal Register** is published in paper, 24x microfiche and as an online database through *GPO Access*, a service of the U.S. Government Printing Office. The online database is updated by 6 a.m. each day the **Federal Register** is published. The database includes both text and graphics from Volume 59, Number 1 (January 2, 1994) forward. It is available on a Wide Area Information Server (WAIS) through the Internet and via asynchronous dial-in. The annual subscription fee for a single workstation is $375. Six-month subscriptions are available for $200 and one month of access can be purchased for $35. Discounts are available for multiple-workstation subscriptions. To subscribe, Internet users should telnet to swais.access.gpo.gov and login as newuser (all lower case); no password is required. Dial-in users should use communications software and modem to call (202) 512–1661 and login as swais (all lower case); no password is required; at the second login prompt, login as newuser (all lower case); no password is required. Follow the instructions on the screen to register for a subscription for the **Federal Register** Online via *GPO Access.* For assistance, contact the *GPO Access* User Support Team by sending Internet e-mail to help@eids05.eids.gpo.gov, or a fax to (202) 512–1262, or by calling (202) 512–1530 between 7 a.m. and 5 p.m. Eastern time, Monday through Friday, except Federal holidays.

The annual subscription price for the **Federal Register** paper edition is $494, or $544 for a combined **Federal Register**, Federal Register Index and List of CFR Sections Affected (LSA) subscription; the microfiche edition of the **Federal Register** including the Federal Register Index and LSA is $433. Six month subscriptions are available for one-half the annual rate. The charge for individual copies in paper form is $8.00 for each issue, or $8.00 for each group of pages as actually bound; or $1.50 for each issue in microfiche form. All prices include regular domestic postage and handling. International customers please add 25% for foreign handling. Remit check or money order, made payable to the Superintendent of Documents, or charge to your GPO Deposit Account, VISA or MasterCard. Mail to: New Orders, Superintendent of Documents, P.O. Box 371954, Pittsburgh, PA 15250–7954.

There are no restrictions on the republication of material appearing in the **Federal Register.**

How To Cite This Publication: Use the volume number and the page number. Example: 60 FR 12345.

SUBSCRIPTIONS AND COPIES

PUBLIC

Subscriptions:

Paper or fiche	**202–512–1800**
Assistance with public subscriptions	**512–1806**

Online:

Telnet swais.access.gpo.gov, login as newuser <enter>, no password <enter>; or use a modem to call (202) 512–1661, login as swais, no password <enter>, at the second login as newuser <enter>, no password <enter>.

Assistance with online subscriptions	**202–512–1530**

Single copies/back copies:

Paper or fiche	**512–1800**
Assistance with public single copies	**512–1803**

FEDERAL AGENCIES

Subscriptions:

Paper or fiche	**523–5243**
Assistance with Federal agency subscriptions	**523–5243**

For other telephone numbers, see the Reader Aids section at the end of this issue.

THE FEDERAL REGISTER

WHAT IT IS AND HOW TO USE IT

FOR: Any person who uses the Federal Register and Code of Federal Regulations.

WHO: The Office of the Federal Register.

WHAT: Free public briefings (approximately 3 hours) to present:

1. The regulatory process, with a focus on the Federal Register system and the public's role in the development of regulations.
2. The relationship between the Federal Register and Code of Federal Regulations.
3. The important elements of typical Federal Register documents.
4. An introduction to the finding aids of the FR/CFR system.

WHY: To provide the public with access to information necessary to research Federal agency regulations which directly affect them. There will be no discussion of specific agency regulations.

WASHINGTON, DC

WHEN: June 28 at 9:00 am

WHERE: Office of the Federal Register Conference Room, 800 North Capitol Street NW., Washington, DC (3 blocks north of Union Station Metro)

RESERVATIONS: 202–523–4538

BOSTON, MA

WHEN: June 20 at 9:00 am

WHERE: Room 419, Barnes Federal Building 495 Summer Street, Boston, MA

RESERVATIONS: Call the Federal Information Center 1–800–347–1997

Printed on recycled paper containing 100% post consumer waste

Contents

Federal Register

Vol. 60, No. 110

Thursday, June 8, 1995

Agency for Toxic Substances and Disease Registry
NOTICES
Hazardous substance releases and facilities:
Public health assessments and effects—
Intent to revise process, 30303–30304

Agriculture Department
See Rural Utilities Service
NOTICES
Agency information collection activities under OMB review, 30266–30267

Centers for Disease Control and Prevention
NOTICES
Grant and cooperative agreement awards:
North Carolina Environment, Health and Natural Resources Department, 30304–30305
Grants and cooperative agreements; availability, etc.:
Black College Satellite Network; public health practitioners and minority and underserved populations interaction improvement, 30306–30307
Tuberculosis control efforts on college and university campuses, 30305–30306
Violence prevention for minority medical students; fellowship program, 30307–30309
Memorandums of understanding:
Mine Safety and Health Administration; respiratory devices; certification requrements, 30403–30404

Commerce Department
See Foreign-Trade Zones Board
See International Trade Administration
See National Oceanic and Atmospheric Administration

Comptroller of the Currency
RULES
Practice and procedure:
Ex parte communications, 30183–30184

Corporation for National and Community Service
NOTICES
Center for Excellence in the Environment; environmental training and technical assistance; input solicitation, 30321

Defense Department
RULES
Teacher and teacher's aide placement assistance program (troops to teachers), 30188–30189

Drug Enforcement Administration
NOTICES
Applications, hearings, determinations, etc.:
Ganes Chemicals, Inc., 30318
Johnson & Johnson Pharmaceutical Partners, 30320
Radian Corp., 30318, 30319
Research Triangle Institute, 30318–30319
Roxane Laboratories, Inc., 30320
Stanford Seed Co., 30319–30320

Education Department
NOTICES
Grants and cooperative agreements; availability, etc.:
Women's Educational Equity Act program, 30288–30290

Energy Department
See Federal Energy Regulatory Commission
PROPOSED RULES
Acquisition regulations:
Federal regulatory review, 30258–30263

Environmental Protection Agency
RULES
Air quality implementation plans; approval and promulgation; various States:
Utah, 30189–30192
Clean Air Act:
State operating permits programs—
Utah, 30192–30195
PROPOSED RULES
Air quality implementation plans; approval and promulgation; various States:
Utah, 30217
Water pollution; effluent guidelines for point source categories:
Pesticide chemicals; formulation, packaging and repackaging, and pretreatment standards, 30217–30258
NOTICES
Meetings:
Resource Conservation and Recovery Act (RCRA); targeted legislative changes, 30299–30300
Toxic and hazardous substances control:
Premanufacture exemption approvals, 30300–30301

Executive Office of the President
See Management and Budget Office

Federal Aviation Administration
RULES
Airworthiness directives:
Hiller Aircraft Corp., 30184–30186
PROPOSED RULES
Airworthiness directives:
Boeing, 30208–30211
NOTICES
Airport noise compatibility program:
Palm Beach International Airport, FL, 30329–30333

Federal Communications Commission
NOTICES
Agency information collection activities under OMB review, 30301–30302

Federal Election Commission
NOTICES
Meetings; Sunshine Act, 30334

Federal Energy Regulatory Commission
RULES
Natural Gas Policy Act:
Interstate natural gas pipelines; firm capacity release, 30186–30188

NOTICES
Natural gas certificate filings:
Columbia Gas Transmission Corp. et al., 30296–30299
Preliminary permits surrender:
Portland General Electric Co., 30299
Applications, hearings, determinations, etc.:
ANR Pipeline Co., 30292–30293
ANR Storage Co., 30291
Colorado Interstate Gas Co., 30295
El Paso Natural Gas Co., 30294, 30295
Iroquois Gas Transmission System, L.P., 30293
KN Interstate Gas Transmission Co., 30291–30292
Northern Natural Gas Co., 30292
Northwest Pipeline Corp., 30291, 30293
Pacific Gas Transmission Co., 30290–30291
Southern Natural Gas Co., 30294–30295
Williston Basin Interstate Pipeline Co., 30290, 30293

Federal Housing Enterprise Oversight Office
PROPOSED RULES
Minimum capital, 30201–30208

Federal Mine Safety and Health Review Commission
NOTICES
Meetings; Sunshine Act, 30334

Federal Reserve System
NOTICES
Federal Open Market Committee:
Domestic policy directives, 30302–30303
Applications, hearings, determinations, etc.:
Bank of New York Co., Inc., et al., 30302
Mountain Bancshares, Inc., 30302

Federal Trade Commission
PROPOSED RULES
Telemarketing sales rule, 30406–30428

Fish and Wildlife Service
NOTICES
Endangered and threatened species permit applications, 30313–30314
Environmental statements; availability, etc.:
Incidental take permits—
Travis County, TX; golden-cheeked warbler, 30315

Food and Drug Administration
NOTICES
Human and animal drugs:
Patent term extensions under Uruguay Round Agreements Act and their effects on marketing applications; response to citizen petition, 30309–30310
Medical devices; premarket approval:
Femidom Female Condom, 30310–30311

Foreign-Trade Zones Board
NOTICES
Applications, hearings, determinations, etc.:
Louisiana, 30267
LOOP Inc.; crude oil terminal system, 30267
New Jersey
Merck & Co., Inc.; pharmaceutical manufacturing facility, 30267–30268

Health and Human Services Department
See Agency for Toxic Substances and Disease Registry
See Centers for Disease Control and Prevention
See Food and Drug Administration
See Public Health Service
See Substance Abuse and Mental Health Services Administration

Housing and Urban Development Department
See Federal Housing Enterprise Oversight Office
NOTICES
Grants and cooperative agreements; availability, etc.:
Public and Indian housing—
Family investment centers, 30312
Supportive housing programs—
Elderly; correction, 30311–30312
Organization, functions, and authority delegations:
Regional Administrators et al.; authority revocation and redelegation, 30312–30313

Indian Affairs Bureau
NOTICES
Indian tribes, acknowledgement of existence determinations, etc.:
Golden Hill Paugussett Tribe, 30430–30431

Interior Department
See Fish and Wildlife Service
See Indian Affairs Bureau
See Reclamation Bureau

Internal Revenue Service
PROPOSED RULES
Procedure and administration:
Taxpayer identifying numbers (TIN), 30211–30217

International Trade Administration
NOTICES
Antidumping:
Fresh cut flowers from—
Colombia, 30270–30280
Pasta from—
Italy and Turkey, 30268–30270
Countervailing duties:
Circular welded carbon steel pipes and tubes from—
Thailand, 30284–30286
Pasta from—
Italy and Turkey, 30280–30284
International buyer program; domestic trade shows support, 30286–30287

International Trade Commission
NOTICES
Meetings; Sunshine Act, 30334

Interstate Commerce Commission
NOTICES
Rail carriers:
State intrastate rail rate authority—
Alabama, 30317

Judicial Conference of the United States
NOTICES
Federal Courts; long range plan; Conference actions, 30317–30318

Justice Department
See Drug Enforcement Administration

Labor Department
See Mine Safety and Health Administration

Management and Budget Office
PROPOSED RULES
Reporting and recordkeeping requirements, 30438–30456

Mine Safety and Health Administration
RULES
Coal mine safety and health:
Respiratory protective devices; certification requirements, 30398–30402
NOTICES
Memorandums of understanding:
Centers for Disease Control; respiratory devices; certification requirements, 30403–30404

Mine Safety and Health Federal Review Commission
See Federal Mine Safety and Health Review Commission

National Aeronautics and Space Administration
NOTICES
Patent licenses; non-exclusive, exclusive, or partially exclusive:
Cellulose Conversion Technology, 30320–30321
Total Quality Measures, Inc., 30321

National Highway Traffic Safety Administration
RULES
Motor vehicle safety standards:
Brake hoses and motor vehicle brake fluids—Compatibility testing, 30196–30199

National Oceanic and Atmospheric Administration
RULES
Fishery conservation and management:
Gulf of Alaska groundfish, 30199–30200
PROPOSED RULES
Endangered and threatened species:
West Coast chinook salmon; critical habital designation, 30263–30264
NOTICES
Marine sanctuaries:
Key Largo National Marine Sancutary, FL; coral reef restoration activities; temporary closure of two areas to public access, 30287–30288

National Transportation Safety Board
NOTICES
Meetings; Sunshine Act, 30334

Office of Federal Housing Enterprise Oversight
See Federal Housing Enterprise Oversight Office

Office of Management and Budget
See Management and Budget Office

Public Health Service
See Agency for Toxic Substances and Disease Registry
See Centers for Disease Control and Prevention
See Food and Drug Administration
See Substance Abuse and Mental Health Services Administration
RULES
Occupational safety and health:
Respiratory protective devices; certification requirements, 30336–30398
NOTICES
National toxicology program:
Biennial Report on Carcinogens; review of criteria used in substance listing, 30434–30436

Reclamation Bureau
NOTICES
Environmental statements; availability, etc.:
Tongue River Basin Project, MT, 30315–30316
Meetings:
Bay-Delta Advisory Council, 30316–30317

Rural Utilities Service
NOTICES
Environmental statements; availability, etc.:
Catoosa Utility District and Upper Cumberland Plateau Region, TN, 30266
Lincoln-Pipestone rural water system, MN, 30265–30266

Securities and Exchange Commission
NOTICES
Self-regulatory organizations:
Clearing agency registration applications—Government Securities Clearing Corp., 30324–30325
Applications, hearings, determinations, etc.:
Frank Russell Investment Co. et al., 30321–30324

Small Business Administration
NOTICES
Intergovernmental review of agency programs and activities, 30325–30327

State Department
RULES
Visas; nonimmigrant documentation:
Armed forces members of foreign countries; passport and visa requirements waiver, 30188
NOTICES
Bridge permit applications:
Laredo, TX, 30327–30328
Environmental statements; availability, etc.:
Laredo, TX; new international railroad bridge, 30328
Meetings:
Overseas Schools Advisory Council, 30328

Substance Abuse and Mental Health Services Administration
NOTICES
Grants and cooperative agreements; availability, etc.:
Integrated children and family services competitive supplements, 30311

Toxic Substances and Disease Registry Agency
See Agency for Toxic Substances and Disease Registry

Transportation Department
See Federal Aviation Administration
See National Highway Traffic Safety Administration
RULES
Organization, functions, and authority delegations:
Administrator, Research and Special Programs Administration, et al., 30195–30196

Treasury Department
See Comptroller of the Currency
See Internal Revenue Service

United States Enrichment Corporation
NOTICES
Meetings; Sunshine Act, 30334

Separate Parts In This Issue

Part II
Department of Health and Human Services, Centers for Disease Control and Public Health Service; Department of Labor, Mine Safety and Health Administration, 30336–30404

Part III
Federal Trade Commission, 30406–30428

Part IV
Department of the Interior, Bureau of Indian Affairs, 30430–30431

Part V
Department of Health and Human Services, Public Health Service, 30434–30436

Part VI
Office of Management and Budget, 30438–30456

Reader Aids

Additional information, including a list of public laws, telephone numbers, and finding aids, appears in the Reader Aids section at the end of this issue.

Electronic Bulletin Board

Free **Electronic Bulletin Board** service for Public Law numbers, **Federal Register** finding aids, and a list of documents on public inspection is available on 202–275–1538 or 275–0920.

CFR PARTS AFFECTED IN THIS ISSUE

A cumulative list of the parts affected this month can be found in the Reader Aids section at the end of this issue.

5 CFR
Proposed Rules:
1320.....30438

12 CFR
19.....30183
Proposed Rules:
1750.....30201

14 CFR
39.....30184
Proposed Rules:
39.....30208

16 CFR
Proposed Rules:
310.....30406

18 CFR
284.....30186

22 CFR
41.....30188

26 CFR
Proposed Rules:
301.....30211

30 CFR
11.....30398
49.....30398
56.....30398
57.....30398
58.....30398
70.....30398
72.....30398
75.....30398

32 CFR
254.....30188

40 CFR
52.....30189
70.....30192
Proposed Rules:
52.....30217
455.....30217

42 CFR
84.....30336

48 CFR
Proposed Rules:
9.....30258

49 CFR
1.....30195
571.....30196

50 CFR
672 (3 documents) 30199, 30200
Proposed Rules:
227.....30263

Rules and Regulations

Federal Register
Vol. 60, No. 110
Thursday, June 8, 1995

This section of the FEDERAL REGISTER contains regulatory documents having general applicability and legal effect, most of which are keyed to and codified in the Code of Federal Regulations, which is published under 50 titles pursuant to 44 U.S.C. 1510.

The Code of Federal Regulations is sold by the Superintendent of Documents. Prices of new books are listed in the first FEDERAL REGISTER issue of each week.

DEPARTMENT OF THE TREASURY

Office of the Comptroller of the Currency

12 CFR Part 19

[Docket No. 95–09]

RIN 1557–AB15

Uniform Rules of Practice and Procedure

AGENCY: The Office of the Comptroller of the Currency, Treasury.

ACTION: Final rule.

SUMMARY: The Office of the Comptroller of the Currency (OCC) is amending a provision of the Uniform Rules of Practice and Procedure adopted by the OCC (Uniform Rules). The final rule is intended to clarify that the Uniform Rules' provisions relating to ex parte communications conform to the requirements of the Administrative Procedure Act (APA). The final rule is needed to clarify that the Uniform Rules' ex parte provisions do not apply to intra-agency communications, which are governed by a separate provision of the APA.

EFFECTIVE DATE: July 10, 1995.

FOR FURTHER INFORMATION CONTACT: Daniel Stipano, Director, Enforcement and Compliance (202–874–4800), or Daniel Cooke, Attorney, Legislative and Regulatory Activities Division (202–874–5090).

SUPPLEMENTARY INFORMATION:

Background

Section 916 of the Financial Institutions Reform, Recovery and Enforcement Act of 1989 (FIRREA), Pub. L. 73, 103 Stat. 183 (1989) required the OCC, Board of Governors of the Federal Reserve System (Board of Governors), Federal Deposit Insurance Corporation (FDIC), Office of Thrift Supervision (OTS), and National Credit Union Administration (NCUA) (collectively, the ''agencies'') to develop uniform rules and procedures for administrative hearings. The agencies issued a joint notice of proposed rulemaking on June 17, 1991 (56 FR 27790) and issued their final Uniform Rules in August 1991 (OCC, 56 FR 38024, August 9, 1991; Board of Governors, 56 FR 38052, August 9, 1991; FDIC, 56 FR 37975, August 9, 1991; OTS, 56 FR 38317, August 12, 1991; and NCUA, 56 FR 37767, August 8, 1991).

On November 22, 1994 (59 FR 60094), the Board of Governors proposed to amend its Uniform Rules relating to ex parte communications to clarify that the Uniform Rules parallel the requirements of the APA. The OCC issued a similar notice of proposed rulemaking (proposal) on December 12, 1994 (59 FR 63936). The OTS, FDIC, and NCUA also proposed the amendment (FDIC, 59 FR 60921, November 29, 1994; OTS, 59 FR 62354, December 5, 1994; NCUA, 59 FR 67655, December 30, 1994).

The Board of Governors issued a final rule on December 19, 1994 (59 FR 65244).

As adopted in 1991, § 19.9 of the Uniform Rules prohibited a party, the party's counsel, or another interested person from making an ex parte communication to the Comptroller or other decisional official concerning the merits of an adjudicatory proceeding. When the agencies proposed the Uniform Rules in 1991, they explained that the section on ex parte communications would adopt the rules and procedures set forth in the APA (5 U.S.C. 551(14) and 557(d)) regarding ex parte communications. The OCC did not intend at that time to impose a rule more restrictive than that imposed by the APA.

Scope of the APA

The APA contains two provisions relating to communications with agency decisionmakers. The first, the ex parte communication provision, restricts communications between an interested person *outside* the agency, on the one hand, and the agency head, the administrative law judge (ALJ), or an agency decisional employee, on the other. 5 U.S.C. 557(d).

The second, the intra-agency communications provision, governs the separation of functions *within* an agency. 5 U.S.C. 554(d). That section prohibits agency investigative or prosecutorial staff from participating or advising in the decision, recommended decision, or agency review of an adjudicatory matter pursuant to 5 U.S.C. 557 except as witness or counsel. The provision provides that the ALJ in an adjudicatory matter may not consult any party on a fact in issue unless the other parties have an opportunity to participate. 5 U.S.C. 554(d)(1). The separation of functions provision does not prohibit agency investigatory or prosecutorial staff from seeking the amendment of a notice or the settlement or termination of a proceeding.

The Uniform Rules as proposed and adopted in 1991, however, do not mention the separation of functions concept explicitly. Consequently, the Uniform Rules could have been interpreted to apply the ex parte communication prohibition to all communications concerning the merits of an adjudicatory proceeding between the agency head, ALJ, or decisional employee, on one hand, and any party, the party's counsel, or another person interested in the proceeding on the other hand.

This interpretation of § 19.9 would limit an agency's investigatory or prosecutorial staff's ability to seek approval of amendments to, or terminations of, existing enforcement actions. Thus, as adopted in 1991, § 19.9 could be interpreted to expand the ex parte communication prohibition beyond the scope of the APA. The OCC did not and does not intend that interpretation. The final rule, therefore, makes clear that § 19.9 is no broader than the APA.

The Final Rule

The final rule conforms the Uniform Rules to the APA by: (1) Limiting the prohibition on ex parte communications to communications to or from interested persons outside the agency and the ALJ, agency head, and agency decisional employees (5 U.S.C. 557(d)); and (2) incorporating explicitly the APA's separation of functions provision (5 U.S.C. 554(d)). This approach is also consistent with the most recent Model Adjudication Rules prepared by the Administrative Conference of the United States (ACUS). ACUS, *Model Adjudication Rules* (December, 1993).

In addition, § 19.9(a)(1) of the final rule conforms the definition of ''ex parte communication'' to the language of 5 U.S.C. 557(d), which prohibits ex parte

communications ''relevant to the merits'' of a proceeding. The final rule's definition of ex parte communications substitutes the words ''relevant to the merits'' of an adjudicatory proceeding for the words ''concerning the merits'' of an adjudicatory proceeding, which appear in the current rule.

Comment Received

The OCC received one comment on its proposal. The comment supported the proposal and suggested that the OCC explain the so-called ''Chinese wall'' that prevents those staff members involved in the prosecutorial function from communicating with those who advise the Comptroller on a particular matter. The final rule specifically sets out the APA's separation of functions provision, which prohibits agency prosecutorial personnel in one case from participating in the Comptroller's decision on that or a factually related case.

The final rule prohibits prosecutorial staff from communicating about the merits of a case with those staff members who advise the Comptroller regarding a final decision in the case. Therefore, the OCC believes that it is unnecessary, in a rulemaking, to set out the OCC's internal procedures for maintaining the statutorily required communication barrier. In conformance with the APA and this rule, OCC investigative and prosecutorial staff do not make communications to decisional employees that are relevant to the merits of an adjudicatory proceeding without putting the communications on the record and without giving reasonable prior notice to all parties.

Regulatory Flexibility Act

Pursuant to section 605(b) of the Regulatory Flexibility Act, the OCC hereby certifies that this final rule will not have a significant economic impact on a substantial number of small entities. Accordingly, a regulatory flexibility analysis is not required.

The final rule makes a minor amendment to a rule of practice already in place and affects agency procedure exclusively. Thus, it will not result in additional burden for regulated institutions. The purpose of the proposal is to conform the provisions of the regulation to those imposed by statute.

Executive Order 12866

The OCC has determined that this rule is not a significant regulatory action as defined in Executive Order 12866.

Unfunded Mandates Act of 1995

Section 202 of the Unfunded Mandates Reform Act of 1995, Pub. L. 104–4 (Unfunded Mandates Act) (signed into law on March 22, 1995) requires that an agency prepare a budgetary impact statement before promulgating a rule that includes a Federal mandate that may result in expenditure by State, local, and tribal governments, in the aggregate, or by the private sector, of $100 million or more in any one year. If a budgetary impact statement is required, section 205 of the Unfunded Mandates Act also requires an agency to identify and consider a reasonable number of regulatory alternatives before promulgating a rule. As discussed in the preamble, this final rule is limited in application to the internal procedures of the OCC. The OCC has therefore determined that the final rule will not result in expenditures by State, local, or tribal governments or by the private sector of more than $100 million. Accordingly, the OCC has not prepared a budgetary impact statement or specifically addressed the regulatory alternatives considered.

List of Subjects in 12 CFR Part 19

Administrative practice and procedure, Crime, Investigations, National banks, Penalties, Securities.

Authority and Issuance

For the reasons set out in the preamble, part 19 of chapter I of title 12 of the Code of Federal Regulations is amended as follows:

PART 19—RULES OF PRACTICE AND PROCEDURE

1. The authority citation for part 19 is revised to read as follows:

Authority: 5 U.S.C. 504, 554–557; 12 U.S.C. 93(b), 164, 505, 1817, 1818, 1820, 1831o, 1972, 3102, 3108(a), and 3909; 15 U.S.C. 78(h) and (i), 78o–4(c), 78o–5, 78q–1, 78u, 78u–2, 78u–3, and 78w; and 31 U.S.C. 330.

2. In § 19.9, paragraphs (a)(1) and (b) are revised and a new paragraph (e) is added to read as follows:

§ 19.9 Ex parte communications.

(a) *Definition*—(1) *Ex parte communication* means any material oral or written communication relevant to the merits of an adjudicatory proceeding that was neither on the record nor on reasonable prior notice to all parties that takes place between:

(i) An interested person outside the OCC (including such person's counsel); and

(ii) The administrative law judge handling that proceeding, the Comptroller, or a decisional employee.

* * * * *

(b) *Prohibition of ex parte communications.* From the time the notice is issued by the Comptroller until the date that the Comptroller issues his or her final decision pursuant to § 19.40(c):

(1) No interested person outside the OCC shall make or knowingly cause to be made an ex parte communication to the Comptroller, the administrative law judge, or a decisional employee; and

(2) The Comptroller, administrative law judge, or decisional employee shall not make or knowingly cause to be made to any interested person outside the OCC any ex parte communication.

* * * * *

(e) *Separation of functions.* Except to the extent required for the disposition of ex parte matters as authorized by law, the administrative law judge may not consult a person or party on any matter relevant to the merits of the adjudication, unless on notice and opportunity for all parties to participate. An employee or agent engaged in the performance of investigative or prosecuting functions for the OCC in a case may not, in that or a factually related case, participate or advise in the decision, recommended decision, or agency review of the recommended decision under § 19.40, except as witness or counsel in public proceedings.

Dated: June 2, 1995.

Eugene A. Ludwig,

Comptroller of the Currency.

[FR Doc. 95–14008 Filed 6–7–95; 8:45 am]

BILLING CODE 4810–33–P

DEPARTMENT OF TRANSPORTATION

Federal Aviation Administration

14 CFR Part 39

[Docket No. 95–SW–13–AD; Amendment 39–9252; AD 95–12–02]

Airworthiness Directives; Hiller Aircraft Corporation Model UH–12A, UH–12B, UH–12C, UH–12D, and UH–12E Helicopters

AGENCY: Federal Aviation Administration, DOT.

ACTION: Final rule; request for comments.

SUMMARY: This amendment adopts a new airworthiness directive (AD) that is applicable to Hiller Aircraft Corporation (Hiller) Model UH–12A, UH–12B, UH–

12C, UH–12D, and UH–12E helicopters. This action requires a dye-penetrant inspection of the head of the main rotor outboard tension-torsion (T-T) bar pin for cracks; a visual inspection of the outboard T-T bar pin for proper alignment, and an adjustment, if necessary; and, installation of shims at the inboard end of the drag strut. This amendment is prompted by two accidents involving failure of the outboard T-T bar pin on Hiller UH–12E helicopters. The actions specified by this AD are intended to prevent cracks in the head area of the outboard T-T bar pin, which could result in loss of in-plane stability of the main rotor blade and subsequent loss of control of the helicopter.

DATES: Effective on June 23, 1995.

The incorporation by reference of certain publications listed in the regulations is approved by the Director of the **Federal Register** as of June 23, 1995.

Comments for inclusion in the Rules Docket must be received on or before August 7, 1995.

ADDRESSES: Submit comments in triplicate to the Federal Aviation Administration (FAA), Office of the Assistant Chief Counsel, Attention: Rules Docket No. 95–SW–13–AD, 2601 Meacham Blvd., Room 663, Fort Worth, Texas 76137.

The service information referenced in this AD may be obtained from Hiller Aircraft Corporation, 7980 Enterprise Drive, Newark, California 94560–3497. This information may be examined at the FAA, Office of the Assistant Chief Counsel, 2601 Meacham Blvd., Room 663, Fort Worth, Texas; or at the Office of the Federal Register, 800 North Capitol Street NW., suite 700, Washington, DC.

FOR FURTHER INFORMATION CONTACT: Mr. Charles Matheis, Aerospace Engineer, FAA, Los Angeles Aircraft Certification Office, 3960 Paramount Blvd., Lakewood, California 90712–4137, telephone (310) 627–5235, fax (310) 627–5210.

SUPPLEMENTARY INFORMATION: This amendment adopts a new AD that is applicable to Hiller Model UH–12A, UH–12B, UH–12C, UH–12D, and UH–12E helicopters. This AD is prompted by two accidents, both involving Model UH–12E helicopters, in which failure of the outboard T-T bar pin, part number (P/N) 51452, was subsequently determined to be the cause of the accidents. The Hiller Model UH–12E helicopter main rotor system design is similar to the main rotor system design of the Hiller Model UH–12A, UH–12B, UH–12C, and UH–12D helicopters. The outboard T-T bar pin extends from the main rotor blade root fork and serves as an attachment point for the inboard end of the main rotor blade drag strut. The drag strut fixes the in-plane stability of the main rotor blade and transfers the drag forces applied by the main rotor blade to the main rotor hub.

The National Transportation Safety Board (NTSB) issued Safety Recommendation A–94–189, dated November 30, 1994, which states that both failures resulted from fatigue cracks that originated from the bolt through-hole of an outboard T-T bar pin. The NTSB investigation revealed that improper alignment and excessive play between the outboard T-T bar pin and the inboard end of the drag strut can introduce large operating stresses in the head of the outboard T-T bar pin. A fracture of the outboard T-T bar pin allows the main rotor blade to rotate freely about the blade hub, resulting in a loss of in-plane stability. Any cracks in the head of the outboard T-T bar pin create an unsafe condition. Due to the criticality of the outboard T-T bar pin in maintaining main rotor blade stability, and the relatively short compliance time, this AD is being issued immediately to correct an unsafe condition. The actions required by this AD include an inspection for cracks in the head of the outboard T-T bar pin using a dye-penetrant inspection method; an inspection to ensure the proper alignment of the outboard T-T bar pin; and, the installation of shims between the inboard end of the drag strut and the outboard T-T bar pin. The FAA has determined that correcting any misalignment can reduce large stresses, and can therefore reduce the likelihood of cracking the head of the outboard T-T bar pin. That condition, if not corrected, could result in loss of in-plane stability of the main rotor blade and subsequent loss of control of the helicopter.

The FAA has reviewed Hiller Aviation Service Bulletin (SB) No. 51–9, dated April 8, 1983, which describes procedures for the installation of shims between the inboard end of the drag strut and the outboard T–T bar pin; and Hiller Aviation Service Letter (SL) 51–2, dated March 31, 1978, which describes procedures for an inspection to ensure proper alignment of the outboard T–T bar pin, and an inspection of the head of the outboard T–T bar pin for cracks using a dye-penetrant inspection method. The FAA has determined that the compliance times prescribed in those service documents are not adequate to ensure safety of flight, and is revising those compliance times in this AD.

Since an unsafe condition has been identified that is likely to exist or develop on other Hiller Model UH–12A, UH–12B, UH–12C, UH–12D, and UH–12E helicopters of the same type design, this AD is being issued to prevent cracks in the head area of the outboard T–T bar pin. This AD requires, within 25 hours time-in-service (TIS) or at the next 100 hours TIS inspection, whichever occurs first, and thereafter at intervals not to exceed 100 hours TIS: (1) an inspection of the alignment of the outboard T–T bar pin and an adjustment, if necessary; and (2) an inspection for cracks in the head of the outboard T–T bar pin using a dye penetrant inspection method. Additionally, this AD requires, within 25 hours TIS or at the next 100 hours TIS inspection, whichever occurs first, the installation of shims between the inboard end of the drag strut and the outboard T–T bar pin. The procedures to perform these actions are required to be accomplished in accordance with the service bulletin and service letter described previously, but in accordance with the compliance times stated in this AD.

Since a situation exists that requires the immediate adoption of this regulation, it is found that notice and opportunity for prior public comment hereon are impracticable, and that good cause exists for making this amendment effective in less than 30 days.

Comments Invited

Although this action is in the form of a final rule that involves requirements affecting flight safety and, thus, was not preceded by notice and an opportunity for public comment, comments are invited on this rule. Interested persons are invited to comment on this rule by submitting such written data, views, or arguments as they may desire. Communications should identify the Rules Docket number and be submitted in triplicate to the address specified under the caption **ADDRESSES**. All communications received on or before the closing date for comments will be considered, and this rule may be amended in light of the comments received. Factual information that supports the commenter's ideas and suggestions is extremely helpful in evaluating the effectiveness of the AD action and determining whether additional rulemaking action would be needed.

Comments are specifically invited on the overall regulatory, economic, environmental, and energy aspects of the rule that might suggest a need to modify the rule. All comments submitted will be available, both before and after the closing date for comments,

in the Rules Docket for examination by interested persons. A report that summarizes each FAA-public contact concerned with the substance of this AD will be filed in the Rules Docket.

Commenters wishing the FAA to acknowledge receipt of their comments submitted in response to this rule must submit a self-addressed, stamped postcard on which the following statement is made: ''Comments to Docket No. 95–SW–13–AD.'' The postcard will be date stamped and returned to the commenter.

The regulations adopted herein will not have substantial direct effects on the States, on the relationship between the national government and the States, or on the distribution of power and responsibilities among the various levels of government. Therefore, in accordance with Executive Order 12612, it is determined that this final rule does not have sufficient federalism implications to warrant the preparation of a Federalism Assessment.

The FAA has determined that this regulation is an emergency regulation that must be issued immediately to correct an unsafe condition in aircraft, and that it is not a ''significant regulatory action'' under Executive Order 12866. It has been determined further that this action involves an emergency regulation under DOT Regulatory Policies and Procedures (44 FR 11034, February 26, 1979). If it is determined that this emergency regulation otherwise would be significant under DOT Regulatory Policies and Procedures, a final regulatory evaluation will be prepared and placed in the Rules Docket. A copy of it, if filed, may be obtained from the Rules Docket at the location provided under the caption **ADDRESSES.**

List of Subjects in 14 CFR Part 39

Air transportation, Aircraft, Aviation safety, Incorporation by reference, Safety.

Adoption of the Amendment

Accordingly, pursuant to the authority delegated to me by the Administrator, the Federal Aviation Administration amends part 39 of the Federal Aviation Regulations (14 CFR part 39) as follows:

PART 39—AIRWORTHINESS DIRECTIVES

1. The authority citation for part 39 continues to read as follows:

Authority: 49 U.S.C. App. 1354(a), 1421 and 1423; 49 U.S.C. 106(g); and 14 CFR section 11.89.

§ 39.13 [Amended]

2. Section 39.13 is amended by adding a new airworthiness directive to read as follows:

95–12–02 Hiller Aircraft Corporation: Amendment 39–9252. Docket No. 95–SW–13–AD.

Applicability: Model UH–12A, UH–12B, UH–12C, UH–12D, and UH–12E helicopters, certificated in any category.

Note 1: This AD applies to each helicopter identified in the preceding applicability provision, regardless of whether it has been modified, altered, or repaired in the area subject to the requirements of this AD. For helicopters that have been modified, altered, or repaired so that the performance of the requirements of this AD is affected, the owner/operator must use the authority provided in paragraph (e) to request approval from the FAA. This approval may address either no action, if the current configuration eliminates the unsafe condition, or different actions necessary to address the unsafe condition described in this AD. Such a request should include an assessment of the effect of the changed configuration on the unsafe condition addressed by this AD. In no case does the presence of any modification, alteration, or repair remove any helicopter from the applicability of this AD.

Compliance: Required as indicated, unless accomplished previously.

To prevent cracks in the head area of the main rotor outboard tension-torsion (T–T) bar pin, which could result in loss of in-plane stability of the main rotor blade and subsequent loss of control of the helicopter, accomplish the following:

(a) Within 25 hours time-in-service (TIS) after the effective date of this AD, or at the next 100 hours TIS inspection, whichever occurs first, and thereafter at intervals not to exceed 100 hours TIS, inspect the alignment of the outboard T–T bar pin, part number (P/N) 51452, and adjust the alignment, if necessary, in accordance with Hiller Aviation Service Letter (SL) 51–2, dated March 31, 1978.

(b) Inspect the head of the outboard T-T bar pin for cracks using a dye-penetrant inspection method.

(c) Report the results of the dye-penetrant inspections required by paragraph (b) of this AD within 7 days following each inspection to the Manager, Los Angeles Aircraft Certification Office, Attention: Charles Matheis, ANM–120L, 3960 Paramount Blvd., Lakewood, California 90712–4137. Include the helicopter model number, serial number, and total TIS of the outboard T–T bar pin in the report. Reporting requirements have been approved by the Office of Management and Budget and assigned OMB control number 2120–0056.

(d) Within 25 hours TIS after the effective date of this AD, or at the next 100 hours TIS inspection, whichever occurs first, install shims between the inboard end of the drag strut and the outboard T-T bar pin in accordance with the Accomplishment Instructions of Hiller Aviation Service Bulletin No. 51–9, dated April 8, 1983.

(e) An alternative method of compliance or adjustment of the compliance time that provides an acceptable level of safety may be used when approved by the Manager, Los Angles Aircraft Certification Office, FAA. Operators shall submit their requests through an FAA Principal Maintenance Inspector, who may concur or comment and then send it to the Manager, Los Angeles Aircraft Certification Office.

Note 2: Information concerning the existence of approved alternative methods of compliance with this AD, if any, may be obtained from the Los Angeles Aircraft Certification Office.

(f) Special flight permits may be issued in accordance with sections 21.197 and 21.199 of the Federal Aviation Regulations (14 CFR sections 21.197 and 21.199) to operate the helicopter to a location where the requirements of this AD can be accomplished.

(g) The inspections, modifications, and adjustments, if necessary, shall be done in accordance with Hiller Aviation Service Bulletin No. 51–9, dated April 8, 1983, and Hiller Aviation Service Letter 51–2, dated March 31, 1978. This incorporation by reference was approved by the Director of the Federal Register in accordance with 5 U.S.C. 552(a) and 1 CFR part 51. Copies may be obtained from Hiller Aircraft Corporation, 7980 Enterprise Drive, Newark, California 94560–3497. Copies may be inspected at the FAA, Office of the Assistant Chief Counsel, 2601 Meacham Blvd., Room 663, Fort Worth, Texas; or at the Office of the Federal Register, 800 North Capitol Street NW., suite 700, Washington, DC.

(h) This amendment becomes effective on June 23, 1995.

Issued in Fort Worth, Texas, on May 25, 1995.

Eric Bries,

Acting Manager, Rotorcraft Directorate, Aircraft Certification Service.

[FR Doc. 95–13410 Filed 6–7–95; 8:45 am]

BILLING CODE 4910–13–P

DEPARTMENT OF ENERGY

Federal Energy Regulatory Commission

18 CFR Part 284

[Docket No. RM95–5–001; Order No. 577–A]

Release of Firm Capacity on Interstate Natural Gas Pipelines

Issued May 31, 1995.

AGENCY: Federal Energy Regulatory Commission; Energy.

ACTION: Final rule; order granting rehearing.

SUMMARY: The Federal Energy Regulatory Commission is amending its capacity release regulations, which permit shippers to release capacity without having to comply with the Commission's advance posting and

bidding requirements. The current regulation permits such releases for a full calendar month. The Commission is revising the regulation to permit exempt releases for up to 31 days in order to accommodate releases crossing calendar months.

EFFECTIVE DATE: The final rule becomes effective July 10, 1995.

FOR FURTHER INFORMATION CONTACT: Michael Goldenberg, Federal Energy Regulatory Commission, 825 North Capitol Street, NE., Washington, DC 20426, (202) 208–2294.

SUPPLEMENTARY INFORMATION: In addition to publishing the full text of this document in the **Federal Register**, the Commission also provides all interested persons an opportunity to inspect or copy the contents of this document during normal business hours in Room 3104, 941 North Capitol Street NE., Washington DC 20426.

The Commission Issuance Posting System (CIPS), an electronic bulletin board service, provides access to the texts of formal documents issued by the Commission. CIPS is available at no charge to the user and may be accessed using a personal computer with a modem by dialing (202) 208–1397. To access CIPS, set your communications software to use 19200, 14400, 12000, 9600, 7200, 4800, 2400, 1200, or 300 bps, full duplex, no parity, 8 data bits, and 1 stop bit. The full text of this document will be available on CIPS for 60 days from the date of issuance in ASCII and WordPerfect 5.1 format. After 60 days the document will be archived, but still accessible. The complete text on diskette in WordPerfect format may also be purchased from the Commission's copy contractor, La Dorn Systems Corporation, also located in Room 3104, 941 North Capitol Street, NE., Washington DC 20426.

Before Commissioners: Elizabeth Anne Moler, Chair; Vicky A. Bailey, James J. Hoecker, William L. Massey, and Donald F. Santa, Jr.

Order Granting Rehearing

On May 1, 1995, Great Lakes Gas Transmission Limited Partnership (Great Lakes) filed a request for rehearing and clarification of Order No. 577, issued March 29, 1995.[1] For the reasons discussed below, the Federal Energy Regulatory Commission (Commission) will grant rehearing and revise § 284.243(h) of its regulations.

Background

In Order No. 577, the Commission revised § 284.243(h) of its capacity release regulations to promote a more effective and efficient capacity release mechanism as well as reduce administrative burdens. The prior regulations permitted shippers to release their firm capacity for less than one calendar month without having to comply with the Commission's requirements to post release offers for bidding. In Order No. 577, the Commission extended the advance posting and bidding exception to one full calendar month to comport with the industry's practice of making gas and capacity decisions on a calendar month basis and to reduce administrative burdens resulting from the use of so-called ''29/1'' day deals to effectuate full month releases.

Great Lakes seeks rehearing or clarification as to whether the Commission intended to exempt short term capacity release transactions spanning two calendar months from the bidding requirements. Great Lakes states that, in its restructuring proceeding under Order No. 636, the Commission required Great Lakes to permit an exception from its bidding requirements for short-term capacity releases of less than 30 days that extended over parts of two months.[2] Great Lakes argues that in the March 29, 1995 order in this rulemaking docket, the Commission seemed to adopt a different approach to short-term releases spanning two calendar months.

Great Lakes points to the Commission's rejection of a request by a commenter that the regulation refer to releases of 31 days, rather than to a calendar month, in order to permit releases of 31 days spanning two calendar months (*i.e.*, January 15 to February 15). The Commission found that limiting the exception to a calendar month synchronized the short-term exception with the industry's practice of purchasing gas and capacity on a monthly basis. The Commission further concluded that substitution of the phrase ''31 days'' was not needed to effectuate mid-month releases. Great Lakes points out that this procedure is not only inconsistent with its tariff, but is burdensome because it entails two postings and two separate contracts.

Discussion

The Commission's restructuring orders were inconsistent in interpreting whether releases crossing calendar months were permissible.[3] To ensure that this rule does not limit flexibility shippers already possess, the Commission will revise the language of the regulation to substitute ''31 days'' for ''calendar month.'' This will permit parties to execute releases of up to 31 days without complying with the Commission's advance posting and bidding requirements. This revision will increase shipper flexibility and also reduce administrative burdens by eliminating the need for one bid, two postings, and two contracts in order to consummate short-term releases across calendar months.

Effective Date

The final rule will take effect July 10, 1995.

List of Subjects in 18 CFR Part 284

Continental shelf, Natural gas, Reporting and recordkeeping requirements.

By the Commission.

Linwood A. Watson, Jr.,

Acting Secretary.

In consideration of the foregoing, the Commission amends Part 284, Chapter I, Title 18, Code of Federal Regulations, as set forth below.

PART 284—CERTAIN SALES AND TRANSPORTATION OF NATURAL GAS UNDER THE NATURAL GAS POLICY ACT OF 1978 AND RELATED AUTHORITIES

1. The authority citation for Part 284 continues to read as follows:

Authority: 15 U.S.C. 717–717w, 3301–3432; 42 U.S.C 7101–7532; 43 U.S.C 1331–1356.

2. In § 284.243, paragraph (h)(1) is revised to read as follows:

§ 284.243 Release of firm capacity on interstate pipelines.

* * * * *

(h)(1) A release of capacity by a firm shipper to a replacement shipper for any period of 31 days or less, or for any term at the maximum tariff rate applicable to the release, need not comply with the notification and bidding requirements of paragraphs (c) through (e) of this section. A release under this paragraph may not exceed the maximum rate. Notice of a firm release under this paragraph must be provided on the

[1] Release of Firm Capacity on Interstate Natural Gas Pipelines, Order No. 577, 60 FR 16979 (Apr. 4, 1995), III FERC Stats. & Regs. Preambles ¶ 31,017 (Mar. 29, 1995).

[2] Great Lakes Gas Transmission Limited Partnership, 64 FERC ¶ 61,017 at 61,171 (1993).

[3] *Compare* Northwest Pipeline Corporation, 63 FERC ¶ 61,124 at 61,803 (1993); Kern River Gas Transmission Company, 62 FERC ¶ 61,191 at 62,270 (1993) (no cross month releases) *with* Great Lakes Gas Transmission Limited Partnership, 64 FERC ¶ 61,017 at 61,171 (1993); Columbia Gas Transmission Corporation, 64 FERC ¶ 61,060 at 61,530 (1993) (permitting cross month releases).

pipeline's electronic bulletin board as soon as possible, but not later than forty-eight hours, after the release transaction commences.

* * * * *

[FR Doc. 95–14012 Filed 6–7–95; 8:45 am]

BILLING CODE 6717–01–P

DEPARTMENT OF STATE

Bureau of Consular Affairs

22 CFR Part 41

[Public Notice 2220]

Visas: Documentation of Nonimmigrants Under the Immigration and Nationality Act, as Amended; Waiver of Passport and Visa Requirements

AGENCY: Bureau of Consular Affairs, State.

ACTION: Final rule.

SUMMARY: This rule amends Department of State regulations to authorize a waiver of the passport and visa requirements of INA 212(a)(7)(B)(i) for members of the armed forces of certain additional foreign countries. Such a waiver would be granted under INA 212(d)(4) by the Attorney General and the Secretary of State acting jointly. This rule amends the regulations by removing Albania, Bulgaria, Czechoslovakia, Estonia, German Democratic Republic, Hungary, Latvia, Lithuania, Poland, Romania, and the Union of Soviet Socialist Republics from the list of countries to whom the waiver cannot apply.

DATES: Effective June 8, 1995.

FOR FURTHER INFORMATION CONTACT: Stephen K. Fischel, Chief, Legislation and Regulations Division, Visa Office, (202) 663–1204.

SUPPLEMENTARY INFORMATION: The Department of State, after consultation with the Immigration and Naturalization Service and the Department of Defense, has determined that it is no longer in the national interest to prohibit aliens on active duty in the armed forces of Albania, Armenia, Azerbaijan, Belarus, Bulgaria, the Czech Republic, Estonia, Georgia, Hungary, Kazakhstan, Kyrgyzstan, Latvia, Lithuania, Moldova, Poland, Romania, Russia, the Slovak Republic, Tajikistan, Turkmenistan, Ukraine, and Uzbekistan from benefiting from a waiver of the passport and visa requirement of INA 212(a)(7)(b)(i) in specific circumstances. In fact, the Department of Defense has been working with certain non-NATO nations to enter into bilateral, Status of Forces agreements similar to those in effect with NATO nations. The Department of State is, therefore, publishing amendments to the regulations at 22 CFR 41.3.

The implementation of this rule as a final rule is based upon the ''good cause'' exceptions established by 5 U.S.C. 553(b)(B) and 553(d)(3). This rule grants or recognizes an exemption or relieves a restriction under 5 U.S.C. 553(d)(1) and is considered beneficial to the United States Government.

This rule is not expected to have a significant impact on a substantial number of small entities under the criteria of the Regulatory Flexibility Act. This rule imposes no reporting or recordkeeping action from the public requiring the approval of the Office of Management and Budget under the Paperwork Reduction Act requirements. This rule has been reviewed as required by E.O. 12778 and certified to be in compliance therewith. This rule is exempted from E.O. 12866 but has been reviewed to ensure consistency therewith.

List of Subjects in 22 CFR Part 41

Aliens, Armed Forces, Nonimmigrants, Visas, Passports, Waivers.

In view of the foregoing 22 CFR part 41 is amended as follows:

PART 41—[AMENDED]

1. The authority citation for Part 41 continues to read:

Authority: 8 U.S.C. 1104, 1182.

2. Section 41.3 is amended by revising paragraph (e) to read as follows:

§ 41.3 Waiver by joint action of consular and immigration officers of passport and/or visa requirements.

* * * * *

(e) *Members of armed forces of foreign countries; visa and passport waiver.* An alien on active duty in the armed forces of a foreign country and a member of a group of such armed forces traveling to the United States, on behalf of the alien's government or the United Nations, under advance arrangements made with the appropriate military authorities of the United States. The waiver does not apply to a citizen or resident of Cuba, Mongolian People's Republic, North Korea (Democratic People's Republic of Korea), Vietnam (Socialist Republic of Vietnam), or the People's Republic of China.

* * * * *

Dated: June 2, 1995.

Mary A. Ryan,

Assistant Secretary for Consular Affairs.

[FR Doc. 95–14077 Filed 6–7–95; 8:45 am]

BILLING CODE 4710–06–P

DEPARTMENT OF DEFENSE

Office of the Secretary

32 CFR Part 254

Teacher and Teacher's Aide Placement Assistance Program (Troops to Teachers)

AGENCY: Office of the Secretary of Defense, DoD.

ACTION: Interim final rule: amendment.

SUMMARY: This interim rule amendment implements ''National Defense Authorization Act for Fiscal Year 1995,'' by extending eligibility in the Department of Defense Teacher and Teacher's Aide Placement Assistance program to Service members that were separated or released from active duty during the 9 year period beginning October 1, 1990. Service members that were separated or released before the Department of Defense established the program on January 19, 1994, but on or after October 1, 1990, have until October 5, 1995, to apply. The effect of this change is to give Service members until October 5, 1995, to apply for the program if their date of discharge or release from active duty falls on or after October 1, 1990, but before January 19, 1994.

This interim rule amendment also provides that civilian employees of the Department of Defense and Department of Energy must apply within 1 year following termination of their employment.

DATES: This document is effective November 25, 1994. Forward comments no later than August 7, 1995.

ADDRESSES: Forward comments to Department of Defense, Office of the Assistant Secretary of Defense (Force Management Policy) (PSF&E) (DoDEA), The Pentagon, room 3E784, Washington, DC 20301–4000.

FOR FURTHER INFORMATION CONTACT: Mr. Otto Thomas (703) 696–4384.

SUPPLEMENTARY INFORMATION: Executive Order 12866, ''Regulatory Planning and Review'' It has been certified that this amendment to the interim final rule, in conformance with Executive Order 12866, does not:

(1) Have an annual effect on the economy of $100 million or more or adversely affect in a material way the

economy, a sector of the economy, productivity, competition, jobs, the environment, public health or safety, or state, local, or tribal governments or communities;

(2) Create a serious inconsistency or otherwise interfere with an action taken or planned by another agency;

(3) Materially alter the budgetary impact of entitlements, grants, user fees, or loan programs or the rights and obligations of recipients thereof; or

(4) Raise novel legal or policy issues arising out of legal mandates, the President's priorities, or the principles set forth in this Executive order.

This amendment to the interim final rule is necessary to initiate the program so as to benefit as many personnel as may otherwise be eligible. This program is time-sensitive and is authorized upon publication in the **Federal Register** until October 1, 1999. Comments will be considered in determining whether to amend this amendment to the interim final rule.

Public Law 96–354, ''Regulatory Flexibility Act'' This amendment to the interim rule is not subject to the Regulatory Flexibility Act (5 U.S.C. 601) and does not have a significant impact on a substantial number of small businesses. The primary target for this program will be local educational agencies that are entitled to Chapter 1 funds pursuant to Title I, Elementary and Secondary Education Act of 1965 (20 U.S.C. 2701 *et seq.*). The program also will provide those contract employees whose DoD contract has been terminated as a result of completion or termination of a defense contract or program in defense spending.

Public Law 96–511, ''Paperwork Reduction Act'' This amendment to the interim rule does not impose any reporting or record keeping requirements under the Paperwork Reduction Act of 1980 (44 U.S.C. 3501–3520).

List of Subjects in 32 CFR Part 254

Elementary and secondary education, Military personnel.

Accordingly, 32 CFR part 254 is amended to read as follows:

PART 254—TEACHER AND TEACHER'S AIDE PLACEMENT ASSISTANCE PROGRAM

1. The authority citation for part 254 is revised to read as follows:

Authority: 10 U.S.C. 1151, 1598, 2410C.

2. In § 254.2, paragraphs (d) introductory text, (d)(1) and (d)(2) are revised to read as follows.

§ 254.2 Definition.

* * * * *

(d) *Eligible personnel.* Service members, civilian employees of the Department of Defense and the Department of Energy, and defense contractor employees who meet the specific requirements identified in paragraphs (d) (1) through (3) of this section. All persons selected shall have a baccalaureate or advanced degree (associate degree or higher for teacher's aide applicants) from an accredited institution of higher learning and, if selected, shall be willing to agree to obtain certification or licensure as an elementary or secondary school teacher or teacher's aide and to accept an offer of full-time employment as an elementary or secondary school teacher or teacher's aid for not fewer than 5 school years in a school that serves a concentration of children from low-income families.

(1) *Eligible service members.* Members of the Armed Forces who during the 9-year period beginning on October 1, 1990 are discharged or released from active duty after 6 or more years of continuous active duty immediately before discharge or release, and are not discharged or released from service under other than honorable conditions. Application must be made within 1 year after discharge or release, except that Service members whose date of discharge or release is on or after October 1, 1990, but before January 19, 1994, shall apply by October 5, 1995. Service members who do not meet the degree requirements at the time of discharge shall be considered to be eligible upon satisfying degree requirements with 5 years after discharge from active duty. In such case, former Service members must make application within 1 year after earning the applicable degree.

(2) *Eligible Nonmilitary Government Employees.* Full time civilian employees of the Department of Defense or the Department of Energy who have served at least 5 years in a civil service position and are terminated from Government employment as a result of reductions in defense spending or the closure of realignment of a military installation as determined by the Secretary of Defense or the Secretary of Energy. Application must be made after receipt of a notice of termination but not later than 1 year following termination.

* * * * *

3. In § 254.4, paragraphs (6) and (c) are revised to read as follows.

§ 254.4 Procedures.

* * * * *

(b) Eligible Service members shall apply for participation in the program not later than 1 year after the date of discharge or release, except that eligible Service members whose date of discharge or release is on or after October 1, 1990 but before January 19, 1994, shall apply by October 5, 1995. Service members who are not eligible on their date of separation because they do not meet the degree requirements required to participate in the program, but who earn an applicable degree within 5 years after separation, shall apply not later than 1 year after earning such a degree. Service members are also encouraged to register in the Public Community Service Registry their interest in pursuing employment as an elementary or secondary school teacher or teacher's aide. Information about the Registry is provided during preseparation counseling as part of the transition assistance program.

(c) Eligible Department of Defense or Department of Energy civilian employees shall apply after they have received written notice of termination of employment but not later than 1 year following the date of such termination. DANTES shall provide program information to civilian personnel offices that will allow civilian personnel offices to make an initial determination of eligibility and refer interested employees to installation education centers for program information and to DANTES for selection purposes.

* * * * *

Dated: May 31, 1995.

L.M. Bynum,

Alternate OSD Federal Register Liaison Officer, Department of Defense.

[FR Doc. 95–13956 Filed 6–7–95; 8:45 am]

BILLING CODE 5000–04–M

ENVIRONMENTAL PROTECTION AGENCY

40 CFR Part 52

[UT24–1–7036a; FRL–5218–6]

Determination of Attainment of Ozone Standard for Salt Lake and Davis Counties, Utah, and Determination Regarding Applicability of Certain Reasonable Further Progress and Attainment Demonstration Requirements

AGENCY: Environmental Protection Agency (EPA).

ACTION: Direct final rule.

SUMMARY: The EPA is determining, through direct final procedure, that the Salt Lake and Davis Counties ozone nonattainment area has attained the National Ambient Air Quality Standard (NAAQS) for ozone. This determination

is based upon three years of complete, quality assured ambient air monitoring data for the years 1992, 1993, and 1994 that demonstrate that the ozone NAAQS has been attained in this area. On the basis of this determination, EPA is also determining that certain reasonable further progress and attainment demonstration requirements, along with certain other related requirements, of Part D of Title 1 of the Clean Air Act are not applicable to the area for so long as the area continues to attain the ozone NAAQS. Also, in the proposed rules section of this **Federal Register**, EPA is proposing these determinations and soliciting public comment on them. If adverse comments are received on this direct final rule, EPA will withdraw this final rule and address these comments in a final rule on the related proposed rule which is being published in the proposed rules section of this **Federal Register**.

EFFECTIVE DATES: This action will be effective July 24, 1995 unless written adverse comments are received by July 10, 1995. If the effective date is delayed, timely notice will be published in the **Federal Register**.

ADDRESSES: A copy of the air quality data and EPA's analysis are available for inspection at the following address: United States Environmental Protection Agency, Region 8, Air Programs Branch, 999 18th Street, Suite 500, Denver, Colorado 80202–2466.

Written comments should be addressed to: Douglas M. Skie, Chief, Air Programs Branch (8ART-AP), United States Environmental Protection Agency, Region 8, 999 18th Street, Suite 500, Denver, Colorado 80202–2466.

FOR FURTHER INFORMATION CONTACT: Tim Russ, Air Programs Branch (8ART-AP), United States Environmental Protection Agency, Region 8, 999 18th Street, Suite 500, Denver, Colorado 80202–2466 Phone: (303) 293–1814.

SUPPLEMENTARY INFORMATION:

I. Background

Subpart 2 of Part D of Title I of the Clean Air Act (CAA) contains various air quality planning and State Implementation Plan (SIP) submission requirements for ozone nonattainment areas. EPA believes it is reasonable to interpret provisions regarding reasonable further progress (RFP) and attainment demonstrations, along with certain other related provisions, so as not to require SIP submissions if an ozone nonattainment area subject to those requirements is monitoring attainment of the ozone standard (i.e., attainment of the NAAQS demonstrated with three consecutive years of complete, quality assured air quality monitoring data). As described below, EPA has previously interpreted the general provisions of subpart 1 of part D of Title I (sections 171 and 172) so as not to require the submission of SIP revisions concerning RFP, attainment demonstrations, or contingency measures. As explained in a memorandum dated May 10, 1995, from John Seitz, Director, Office of Air Quality and Planning Standards, to the Regional Air Division Directors, entitled ''Reasonable Further Progress, Attainment Demonstration, and Related Requirements for Ozone Nonattainment Areas Meeting the Ozone National Ambient Air Quality Standard'', EPA believes it is appropriate to interpret the more specific RFP, attainment demonstration and related provisions of subpart 2 in the same manner.

First, with respect to RFP, section 171(1) of the CAA states that, for purposes of part D of Title I, RFP ''means such annual incremental reductions in emissions of the relevant air pollutant as are required by this part or may reasonably be required by the Administrator for the purpose of ensuring attainment of the applicable national ambient air quality standard by the applicable date.'' Thus, whether dealing with the general RFP requirement of section 172(c)(2), or the more specific RFP requirements of subpart 2 for classified ozone nonattainment areas (such as the 15 percent plan requirement of section 182(b)(1)), the stated purpose of RFP is to ensure attainment by the applicable attainment date.[1] If an area has in fact attained the standard, the stated purpose of the RFP requirement will have already been fulfilled and EPA does not believe that the area need submit revisions providing for the further emission reductions described in the RFP provisions of section 182(b)(1).

EPA notes that it took this view with respect to the general RFP requirement of section 172(c)(2) in the General Preamble for the Interpretation of Title I of the Clean Air Act Amendments of 1990 (57 FR 13498 dated April 16, 1992), and it is now extending that interpretation to the specific provisions of subpart 2. In the General Preamble, EPA stated, in the context of a discussion of the requirements applicable to the evaluation of requests to redesignate nonattainment areas to attainment, that the ''requirements for RFP will not apply in evaluating a request for redesignation to attainment since, at a minimum, the air quality data for the area must show that the area has already attained. Showing that the State will make RFP towards attainment will, therefore, have no meaning at that point.'' (57 FR at 13564.)[2]

Second, with respect to the attainment demonstration requirements of section 182(b)(1), an analogous rationale leads to the same result. Section 182(b)(1) requires that the plan provide for ''such specific annual reductions in emissions . . . as necessary to attain the national primary ambient air quality standard by the attainment date applicable under this Act.'' As with the RFP requirements, if an area has in fact monitored attainment of the standard, EPA believes there is no need for an area to make a further submission containing additional measures to achieve attainment. This is also consistent with the interpretation of certain section 172(c) requirements provided by EPA in the General Preamble to Title I, as EPA stated there that no other measures to provide for attainment would be needed by areas seeking redesignation to attainment since ''attainment will have been reached.'' (57 FR at 13564; *see also* the September 4, 1992, John Calcagni memorandum entitled ''Procedures for Processing Requests to Redesignate Areas to Attainment'' at page 6.) Upon attainment of the NAAQS, the focus of state planning efforts shifts to the maintenance of the NAAQS and the development of a maintenance plan under section 175A.

Similar reasoning applies to other related provisions of subpart 2. The first of these are the contingency measure requirements of section 172(c)(9). EPA has previously interpreted the contingency measure requirement of section 172(c)(9) as no longer being applicable once an area has attained the standard since those ''contingency measures are directed at ensuring RFP and attainment by the applicable date.'' (57 FR at 13564; *see also* the September 4, 1992, John Calcagni memorandum entitled ''Procedures for Processing Requests to Redesignate Areas to Attainment'' at page 6.)

[1] EPA notes that paragraph (1) of subsection 182(b) is entitled ''PLAN PROVISIONS FOR REASONABLE FURTHER PROGRESS'' and that subparagraph (B) of paragraph 182(c)(2) is entitled ''REASONABLE FURTHER PROGRESS DEMONSTRATION,'' thereby making it clear that both the 15 percent plan requirement of section 182(b)(1) and the 3 percent per year requirement of section 182(c)(2) are specific varieties of RFP requirements.

[2] *See also* ''Procedures for Processing Requests to Redesignate Areas to Attainment,'' from John Calcagni, Director, Air Quality Management Division, to Regional Air Division Directors, September 4, 1992, at page 6 (stating that the ''requirements for reasonable further progress . . . will not apply for redesignations because they only have meaning for areas not attaining the standard'').

EPA emphasizes that the lack of a requirement to submit the SIP revisions discussed above exists only for as long as an area designated nonattainment continues to attain the standard. If EPA subsequently determines that such an area has violated the NAAQS, the basis for the determination that the area need not make the pertinent SIP revisions would no longer exist. The EPA would notify the State of that determination and would also provide notice to the public in the **Federal Register**. Such a determination would mean that the area would have to address the pertinent SIP requirements within a reasonable amount of time, which EPA would establish taking into account the individual circumstances surrounding the particular SIP submissions at issue. Thus, a determination that an area need not submit one of the SIP submittals amounts to no more than a suspension of the requirement for so long as the area continues to attain the standard.

The State must continue to operate an appropriate air quality monitoring network, in accordance with 40 CFR Part 58, to verify the attainment status of the area. The air quality data relied upon to determine that the area is attaining the ozone standard must be consistent with 40 CFR Part 58 requirements and other relevant EPA guidance and recorded in EPA's Aerometric Information Retrieval System (AIRS).

The determinations that are being made with this **Federal Register** notice are not equivalent to the redesignation of the area to attainment. Attainment of the ozone NAAQS is only one of the criteria set forth in section 107(d)(3)(E) that must be satisfied for an area to be redesignated to attainment. To be redesignated, the state must submit and receive full EPA approval of a redesignation request.

Furthermore, the determinations made in this notice do not shield an area from future State or EPA action to require emissions reductions from sources in the area where there is evidence, such as photochemical grid modeling, showing that emissions from sources in the area contribute significantly to nonattainment in, or interfere with maintenance by, other nonattainment areas. EPA has authority under sections 110(a)(2)(A) and 110(a)(2)(D) to require such emission reductions if necessary and appropriate to deal with transport situations.

II. Analysis of Air Quality Data

The EPA has reviewed the ambient air monitoring data for ozone (consistent with the requirements contained in 40 CFR Part 58 and recorded in AIRS) for the Salt Lake and Davis Counties ozone nonattainment area in the State of Utah for 1992, 1993, and 1994. On the basis of that review EPA has concluded that the area has attained the ozone standard. Thus, this area is no longer recording violations of the air quality standard for ozone. A summary table of the relevant air quality data is provided below. A more detailed description of the ozone monitoring data for the area is provided in the EPA technical support document for this action.

The values in the table below present the maximum recorded ozone measurements expressed, for each year, in parts per million (ppm).

Monitor name	AIRS ID No.	1992	1993	1994
Bountiful (Davis County)	49–011–0001 1	0.103	0.104	0.117
Salt Lake County	49–035–0003 1	0.104	0.111	[1] 0.124
Salt Lake City	49–035–3001 2	0.094	0.100	0.115

[1] EPA's ozone monitoring guideline provides that a measured exceedence of the ozone standard does not occur until a measured value of 0.125 ppm is recorded. Refer to EPA's ''Guideline for the Interpretation of Ozone Air Quality Standards'', EPA–450/4–79–003, OAQPS No. 1.2–108, dated January, 1979.

FINAL ACTION: EPA has determined that the Salt Lake and Davis Counties ozone nonattainment area has attained the ozone standard for 1992, 1993, and 1994. As a consequence of EPA's determination that the Salt Lake and Davis Counties area has attained the ozone standard, the requirements of section 182(b)(1) concerning the submission of the 15 percent plan and ozone attainment demonstration and the requirements of section 172(c)(9) concerning contingency measures are not applicable to the area so long as the area does not violate the ozone standard.

Specific to the Salt Lake and Davis Counties' ozone nonattainment area, Governor Michael Leavitt submitted a Redesignation Request and Maintenance Plan on November 12, 1993. On January 13, 1995, the Governor submitted revisions to that initial submittal that included revised emission inventories.

Because the State submitted an Ozone Redesignation Request and Maintenance Plan SIP revision for Salt Lake and Davis Counties, in lieu of a 15 percent SIP revision, Salt Lake and Davis Counties have been subject to the motor vehicle emissions budget in the Ozone Redesignation Request and Maintenance Plan SIP revision for transportation conformity purposes (see 40 CFR 93.128(i)).

Pursuant to EPA's new May 10, 1995, policy, the State may continue to demonstrate conformity to this submitted motor vehicle emissions budget, or the State may choose to withdraw the applicability of the motor vehicle emissions budget in the Ozone Redesignation Request and Maintenance Plan SIP revision for transportation conformity purposes, through the submittal of a letter from the Governor. If the applicability of the submitted motor vehicle emissions budget is withdrawn for transportation conformity purposes, only the build/no-build and less-than-1990 tests will apply until the Ozone Redesignation Request and Maintenance Plan are approved. If the applicability of the submitted motor vehicle emissions budget is not withdrawn for transportation conformity purposes, it will continue to apply.

EPA emphasizes that the above determinations are contingent upon the continued monitoring and continued attainment and maintenance of the ozone NAAQS in the affected area. If a violation of the ozone NAAQS is monitored in the Salt Lake and Davis Counties area (consistent with the requirements contained in 40 CFR Part 58 and recorded in AIRS), EPA will provide notice to the public in the **Federal Register**. Such a violation would mean that the area would thereafter have to address the requirements of section 182(b)(1) and section 172(c)(9) since the basis for the determination that they do not apply would no longer exist.

As a consequence of the determinations that the area has attained and that the reasonable further progress and attainment demonstration requirements of section 182(b)(1), and the contingency measures requirement of section 172(c)(9), do not presently apply, the sanctions clock started by EPA on January 19, 1994, for the failure to submit a section 182(b)(1) 15 percent plan and attainment demonstration, and

section 172(c)(9) contingency measures, is hereby stopped as the deficiencies for which the clock was started no longer exist.

Nothing in this action shall be construed as permitting or allowing or establishing a precedent for any future request for a revision to any SIP. Each request for revision to the SIP shall be considered separately in light of specific technical, economic, and environmental factors and in relation to relevant statutory and regulatory requirements.

This action will become effective on July 24, 1995. However, if the EPA receives adverse comments by July 10, 1995, then the EPA will publish a notice that withdraws the action, and will address those comments in the final rule on this action which has been proposed for approval in the proposed rules section of this **Federal Register**.

This action has been classified as a Table 2 action by the Regional Administrator under the procedures published in the **Federal Register** on January 19, 1989 (54 FR 2214–2225), as revised by an October 4, 1993, memorandum from Michael H. Shapiro, Acting Assistant Administrator for Air and Radiation. The Office of Management and Budget exempted this regulatory action from Executive Order 12866 review.

Under the Regulatory Flexibility Act, 5 U.S.C. 600 *et. seq.*, EPA must prepare a regulatory flexibility analysis assessing the impact of any proposed or final rule on small entities (5 U.S.C. 603 and 604). Alternatively, EPA may certify that the rule will not have a significant impact on a substantial number of small entities. Small entities include small businesses, small not-for-profit enterprises, and government entities with jurisdiction over populations of less than 50,000. Today's determination does not create any new requirements, but allows suspension of the indicated requirements. Therefore, because the approval does not impose any new requirements, I certify that it does not have a significant impact on any small entities affected.

Under Sections 202, 203 and 205 of the Unfunded Mandates Reform Act of 1995 (''Unfunded Mandates Act''), signed into law on March 22, 1995, EPA must undertake various actions in association with proposed or final rules that include a Federal mandate that may result in estimated costs of $100 million or more to the private sector, or to State, local, or tribal governments in the aggregate.

EPA's final action does not impose any federal intergovernmental mandate, as defined in section 101 of the Unfunded Mandates Act, upon the State. No additional costs to State, local, or tribal governments, or to the private sector, result from this action, which suspends the indicated requirements. Thus, EPA has determined that this final action does not include a mandate that may result in estimated costs of $100 million or more to either State, local, or tribal governments in the aggregate, or to the private sector.

Under Section 307(b)(1) of the Clean Air Act, petitions for judicial review of this action must be filed in the United States Court of Appeals for the appropriate circuit by August 7, 1995. Filing a petition for reconsideration by the Administrator of this final rule does not affect the finality of this rule for the purposes of judicial review nor does it extend the time within which a petition for judicial review may be filed, and shall not postpone the effectiveness of such rule or action. This action may not be challenged later in proceedings to enforce its requirements. (See Section 307(b)(2)).

Executive Order 12866

The Office of Management and Budget has exempted this rule from the requirements of Section 6 of Executive Order 12866.

List of Subjects in 40 CFR Part 52

Environmental protection, Air pollution control, Nitrogen oxides, Ozone, Volatile organic compounds, Intergovernmental relations, Reporting and record keeping requirements.

Authority: 42 U.S.C. 7401–7671q.

Dated: May 31, 1995.

William P. Yellowtail,

Regional Administrator.

40 CFR part 52, Subpart TT, is amended as follows:

PART 52—[AMENDED]

1. The authority citation for part 52 continues to read as follows:

Authority: 42 U.S.C. 7401–7671q

Subpart TT—Utah

2. Section 52.2332 is added to read as follows:

§ 52.2332 Control strategy: Ozone.

Determination—EPA is determining that, as of May 17, 1995, the Salt Lake and Davis Counties ozone nonattainment area has attained the ozone standard based on air quality monitoring data from 1992, 1993, and 1994, and that the reasonable further progress and attainment demonstration requirements of section 182(b)(1) and related requirements of section 172(c)(9) of the Clean Air Act do not apply to the area for so long as the area does not monitor any violations of the ozone standard. If a violation of the ozone NAAQS is monitored in the Salt Lake and Davis Counties ozone nonattainment area, these determinations shall no longer apply.

[FR Doc. 95–14067 Filed 6–7–95; 8:45 am]

BILLING CODE 6560–50–P

---

40 CFR Part 70

[UT–001; FRL–5217–8]

Clean Air Act Final Full Approval of Operating Permits Program; Approval of Construction Permit Program Under Section 112(l); State of Utah

AGENCY: Environmental Protection Agency (EPA).

ACTION: Final full approval.

SUMMARY: The EPA is promulgating full approval of the Operating Permits Program submitted by the State of Utah for the purpose of complying with Federal requirements for an approvable State Program to issue operating permits to all major stationary sources, and to certain other sources. EPA is also approving the Utah Construction Permit Program under section 112(l) of the Clean Air Act for the purpose of creating Federally enforceable permit conditions for sources of hazardous air pollutants listed pursuant to section 112(b) of the Clean Air Act.

EFFECTIVE DATE: July 10, 1995.

ADDRESSES: Copies of the State's submittal and other supporting information used in developing the final full approval are available for inspection during normal business hours at the following location: U.S. Environmental Protection Agency, Region 8, 999 18th Street, suite 500, Denver, Colorado 80202.

FOR FURTHER INFORMATION CONTACT: Laura Farris, 8ART–AP, U.S. Environmental Protection Agency, Region 8, 999 18th Street, suite 500, Denver, Colorado 80202, (303) 294–7539.

SUPPLEMENTARY INFORMATION:

I. Background and Purpose

Title V of the 1990 Clean Air Act Amendments (sections 501–507 of the Clean Air Act (''the Act'')), and implementing regulations at 40 Code of Federal Regulations (CFR) part 70 (part 70) require that States develop and submit operating permits programs to EPA by November 15, 1993, and that EPA act to approve or disapprove each program within one year after receiving the submittal. The EPA's program

review occurs pursuant to section 502 of the Act and the part 70 regulations, which together outline criteria for approval or disapproval. Where a program substantially, but not fully, meets the requirements of part 70, EPA may grant the program interim approval for a period of up to two years. If EPA has not fully approved a program by two years after the November 15, 1993 date, or by the end of an interim program, it must establish and implement a Federal program.

On March 22, 1995, EPA proposed full approval of the Operating Permits Program for the State of Utah (PROGRAM). See 60 FR 15105. EPA received public comments on the proposal, and is taking final action to promulgate full approval of the Utah PROGRAM.

II. Final Action and Implications

A. Analysis of State Submission

The Governor of Utah submitted an administratively complete title V Operating Permit Program (PROGRAM) for the State of Utah on April 14, 1994. The Utah PROGRAM, including the operating permit regulations (Utah Administrative Code Rule R307–15, Operating Permit Requirements), fully meets the requirements of 40 CFR parts 70.2 and 70.3 with respect to applicability; parts 70.4, 70.5, and 70.6 with respect to permit content including operational flexibility; part 70.5 with respect to complete application forms and criteria which define insignificant activities; part 70.7 with respect to public participation and minor permit modifications; and part 70.11 with respect to requirements for enforcement authority.

R307–15–3 contains the PROGRAM definitions. EPA is aware that other Utah regulations may contain similar, but not identical, definitions as those contained in R307–15–3. For purposes of this PROGRAM approval, EPA wishes to clarify that the binding definitions are those contained in R307–15–3.

R307–15–5(5) of the State's permitting regulation lists the insignificant activities that sources do not have to include in their operating permit application. This list includes specific activities and sources which are considered to be insignificant. This provision states that the source's application may not omit information needed to determine applicable requirements or to evaluate the fee amount required.

Utah has the authority to issue a variance from requirements imposed by State law. Section 16–2–113, Utah Code Ann., provides that any person may apply to the board for a variance from its rules. The board may grant the requested variance, ''if it determines that the hardship imposed by compliance would outweigh the benefit to the public.'' This authority is limited by regulation: Utah Administrative Code section R307–1–2.3 provides that the board may grant variances to the extent provided under law, unless prohibited by the Act. Other statutory provisions of State law require that the operating permit program must meet the requirements of title V of the Act. See, section 19–2–104(1)(f) and 19–1–109.1(c)–(d), Utah Code Ann.

In addition to these limitations, EPA regards Utah's variance provision as wholly external to the PROGRAM submitted for approval under part 70, and consequently is proposing to take no action on this provision of State law. EPA has no authority to approve provisions of State law, such as the variance provision referred to, which are inconsistent with part 70. EPA does not recognize the ability of a permitting authority to grant relief from the duty to comply with a Federally enforceable part 70 permit, except where such relief is granted through procedures allowed by part 70. If the State uses its variance provision strictly to establish a compliance schedule for a source that will be incorporated into a title V permit, then EPA would consider this an acceptable use of a variance provision. However, the routine process for establishing a compliance schedule is through appropriate enforcement action. EPA reserves the right to enforce the terms of the part 70 permit where the permitting authority purports to grant relief from the duty to comply with a part 70 permit in a manner inconsistent with part 70 procedures.

Part 70 of the Federal operating permit regulation requires prompt reporting of deviations from the permit requirements. Section 70.6(a)(3)(iii)(B) of that regulation requires the permitting authority to define prompt in relation to the degree and type of deviation likely to occur and the applicable requirements. Although the permit program regulations should define prompt for purposes of administrative efficiency and clarity, an acceptable alternative is to define prompt in each individual permit. The EPA believes that prompt should generally be defined as requiring reporting within two to ten days of the deviation. Two to ten days is sufficient time in most cases to protect public health and safety as well as to provide a forewarning of potential problems. For sources with a low level of excess emissions, a longer time period may be acceptable. However, prompt reporting must be more frequent than the semiannual reporting requirement, given this is a distinct reporting obligation under section 70.6(a)(3)(iii)(A) of the Federal operating permit regulation. Where ''prompt'' is defined in the individual permit but not in the program regulations, EPA may veto permits that do not contain sufficiently prompt reporting of deviations. The Utah PROGRAM will define prompt reporting of deviations in each permit consistent with the degree and type of deviation likely and the applicable requirements (see subsection R307–15–6(1)(c)(iii)(B) of the Utah permitting rule). Deviations from permit requirements due to unavoidable breakdowns shall be reported according to the unavoidable breakdown provisions of the Utah Administrative Code section R307–1–4.7.

R307–15–7(5)(a)(v) correctly allows the State to incorporate the terms of a construction permit (i.e., an ''approval order'') into an operating permit using the administrative permit amendment process. This process will be available when a source requests enhanced procedures in the issuance of its construction permit that are ''substantially equivalent'' to the operating permit issuance or modification procedures. ''Substantial equivalence'' between the construction permit and operating permit issuance procedures necessarily includes, among other things, public and affected state review as well as EPA's 45-day review period and veto authority.

B. Response to Comments

The comments received on the March 22, 1995 **Federal Register** notice proposing full approval of the Utah PROGRAM, and EPA's response to those comments, are as follows:

Comment #1: One commenter objected to EPA's statement that the Utah SIP currently does not allow for emission trading within a permitted facility without requiring a permit revision. The commenter stated that the federally-approved PM10 SIP for Utah currently contains a plant-wide emissions limitation for their specific source for the purposes of providing operational flexibility and further stated that they do not need to request operational flexibility under R307–15–7(a)(ii) since their specific source has existing operational flexibility that is provided in this SIP limit. The commenter stated that R307–15–7(a)(ii) is not applicable to their plant-wide annual emissions limitation.

EPA Response: EPA would like to clarify its statement that ''the approved

Utah SIP does not provide for such trading [as allowed in 40 CFR 70.4(b)(12)(ii)] at this time.'' When it made this statement, EPA was thinking only in terms of a generic trading program. EPA was not addressing whether or not the SIP includes operational flexibility for an individual source. Furthermore, EPA only included the statement for informational purposes. Given that the presence or absence of an emissions trading program in the SIP, whether generic or plant-specific, has no bearing on the approvability of the part 70 PROGRAM, EPA has deleted from this notice the language related to 40 CFR 70.4(b)(12)(ii) which appeared in the notice of proposed rulemaking. Finally, if the Utah SIP includes plant-specific operational flexibility as the commenter suggests, the determination of the applicability of specific part 70 provisions to the exercise of such flexibility is not an approval issue, but an implementation issue. Because Utah's PROGRAM meets all of the requirements of part 70 and Title V of the Act, the commenter's assertions have no bearing on EPA's decision to approve Utah's PROGRAM. Questions pertaining to applicability of specific provisions of Utah's PROGRAM will be addressed during State implementation of the PROGRAM.

Comment #2: One commenter suggested that Utah does not have the authority to impose case-by-case maximum achievable control technology (MACT) limitations under 307–1–3, unless the final section 112(g) rule imposes National Emission Standards for Hazardous Air Pollutants (NESHAP). The commenter also stated that the only conditions applicable to hazardous air pollutants (HAPs) under Utah's construction review program are best available control technology and NESHAPs, but not MACT.

EPA Response: The EPA is aware that Utah lacks a program designed specifically to implement section 112(g). However, Utah does have a construction review program that can serve as a procedural vehicle for establishing a case-by-case MACT or offset determination and making these requirements federally enforceable. The EPA approval of Utah's construction review program clarifies that it may be used for this purpose during any transition period to meet the requirements of section 112(g). An alternative would be for Utah to disallow construction and modifications subject to 112(g) during any transition period if the States are not given a grace period in the final 112(g) rule. See also EPA's response to comment #4.

Comment #3: One commenter indicated that Utah's construction review program, as approved under section 112(l), is an appropriate mechanism for establishing limits on the potential-to-emit hazardous air pollutants. However, this mechanism may only be used if a source voluntarily requests a limit on their potential-to-emit hazardous air pollutants.

EPA Response: EPA agrees with the commenter and does not consider this an adverse comment.

Comment #4: One commenter stated that EPA is proposing to approve Utah's construction review program, found in R307–1–3 of the State's regulations, solely for the purpose of implementing section 112(g) during the transition period between federal promulgation of a section 112(g) rule and the adoption of State implementing regulations. However, the commenter continued on to indicate objection to EPA's proposed approval of the Utah construction review program to implement section 112(g) because (a) Utah's PROGRAM may not conform to the section 112(g) requirements once they have been issued by EPA; and (b) EPA is proposing to approve the PROGRAM without clarifying whether Utah's PROGRAM addresses the critical threshold questions of how a source is to determine if an emissions increase is or is not greater than de minimis, and whether or not it has been offset satisfactorily. The commenter also stated that, until the Agency completes its 112(g) rulemaking, there is no legal basis for allowing Utah to implement section 112(g).

EPA Response: EPA agrees with the commenter's first statement that EPA is proposing to approve Utah's construction review program, found in R307–1–3 of the State's regulations, solely for the purpose of implementing section 112(g) during the transition period between federal promulgation of the section 112(g) rule and the adoption of State implementing regulations. However, EPA disagrees with the remaining comments. The **Federal Register** notice dated March 22, 1995 (60 FR 15107) proposing full approval of the Utah Operating Permits PROGRAM, under ''b. Implementation of Section 112(g),'' clearly stated that ''On February 14, 1995 EPA published an interpretive notice (see 60 FR 8333) that postpones the effective date of section 112(g) until after EPA has promulgated a rule addressing that provision.'' Questions regarding the threshold for determining when an emission increase is greater than de minimis and when it has been offset satisfactorily will be addressed in the final section 112(g) rule. The 112(g) interpretive notice explains that EPA is still considering whether the effective date of section 112(g) should be delayed beyond the date of promulgation of the Federal rule so as to allow States time to adopt rules implementing the Federal rule, and that EPA will provide for any such additional delay in the final section 112(g) rulemaking. However, unless and until EPA provides for such an additional postponement of section 112(g), Utah must be able to implement section 112(g) during the period between promulgation of the Federal section 112(g) rule and adoption of implementing State regulations. EPA believes that, if necessary, Utah can utilize its construction review program to serve as a procedural vehicle for implementing Section 112(g) and making these requirements federally enforceable between promulgation of the Federal section 112(g) rule and adoption of implementing State regulations. EPA's approval of Utah's construction review program may be used solely for the purpose of implementing section 112(g) during the transition period to meet the requirements of section 112(g). EPA is limiting the duration of the approval to 12 months following promulgation by EPA of its section 112(g) rule and this approval will be without effect if EPA decides in the final section 112(g) rule that sources are not subject to the requirements of the rule until State regulations are adopted.

C. Final Action

The EPA is promulgating full approval of the Operating Permits Program submitted by the State of Utah on April 14, 1994. Among other things, Utah has demonstrated that the PROGRAM will be adequate to meet the minimum elements of a State operating permits program as specified in 40 CFR part 70. EPA is also approving the Utah Construction Permit Program found in section R307–1–3 of the State's regulations under section 112(l) of the Act for the purpose of creating Federally enforceable permit conditions for sources of hazardous air pollutants listed pursuant to section 112(b) of the Act, and, under the authority of title V and 40 CFR part 70, for the purpose of providing a mechanism to implement section 112(g) of the Act during any transition period between EPA's promulgation of a section 112(g) rule and adoption by the State of rules to implement section 112(g).

Since EPA proposed full approval of Utah's PROGRAM, EPA has learned that the Utah Legislature adopted two laws which provide a privilege related to

Environmental Self-Evaluations—S.B. 84 and S.J.R. 6, codified at 19–7–101—19–7–108, Utah Code Annotated, and Rule 508 of the Utah Rules of Evidence. It is not clear at this time what effect, if any, this privilege might have on title V enforcement actions. However, EPA regards these bills as being wholly external to the PROGRAM submitted for approval under part 70, and consequently is taking no action in this approval on these provisions of State law. If, during PROGRAM implementation, EPA determines that these provisions interfere with Utah's enforcement responsibilities under part 70, EPA will consider this grounds for withdrawing PROGRAM approval in accordance with 40 CFR 70.10(c).

In Utah's part 70 program submission, the State indicated that it is not seeking approval from EPA to administer the State's part 70 PROGRAM within the exterior boundaries of Indian Reservations in Utah. In this notice, EPA is approving Utah's part 70 PROGRAM for all areas within the State except the following: lands within the exterior boundaries of Indian Reservations (including the Uintah and Ouray, Skull Valley, Paiute, Navajo, Goshute, White Mesa, and Northwestern Shoshoni Indian Reservations) and any other areas which are ''Indian Country'' within the meaning of 18 U.S.C. 1151 (excepted areas).

In not extending the scope of Utah's part 70 PROGRAM to sources located in the excepted areas, EPA is not making a determination that the State either has adequate jurisdiction or lacks jurisdiction over such sources. Should the State of Utah choose to seek program approval within these areas, it may do so without prejudice. Before EPA would approve the State's part 70 PROGRAM for any portion of the excepted areas, EPA would have to be satisfied that the State has authority, either pursuant to explicit Congressional authorization or applicable principles of Federal Indian law, to enforce its laws against existing and potential pollution sources within any geographical area for which it seeks program approval and that such approval would constitute sound administrative practice.

Requirements for approval, specified in 40 CFR 70.4(b), encompass section 112(l)(5) requirements for approval of a program for delegation of section 112 standards as promulgated by EPA as they apply to part 70 sources. Section 112(l)(5) requires that the State's program contain adequate authorities, adequate resources for implementation, and an expeditious compliance schedule, which are also requirements under part 70. Therefore, the EPA is promulgating approval under section 112(l)(5) and 40 CFR 63.91 of the State's PROGRAM for receiving delegation of section 112 standards that are unchanged from Federal standards as promulgated. This program for delegations applies to sources covered by the part 70 program, as well as non-part 70 sources.

III. Administrative Requirements

A. Docket

Copies of the State's submittal and other information relied upon for the final full approval, including public comments received and reviewed by EPA on the proposal, are maintained in a docket at the EPA Regional Office. The docket is an organized and complete file of all the information submitted to, or otherwise considered by, EPA in the development of this final full approval. The docket is available for public inspection at the location listed under the **ADDRESSES** section of this document.

B. Executive Order 12866

The Office of Management and Budget has exempted this action from Executive Order 12866 review.

C. Regulatory Flexibility Act

The EPA's actions under section 502 of the Act do not create any new requirements, but simply address operating permits programs submitted to satisfy the requirements of 40 CFR part 70. Because this action does not impose any new requirements, it does not have a significant impact on a substantial number of small entities.

List of Subjects in 40 CFR Part 70

Environmental protection, Administrative practice and procedure, Air pollution control, Intergovernmental relations, Operating permits, Reporting and recordkeeping requirements.

Dated: May 26, 1995.

Jack W. McGraw,

Acting Regional Administrator.

Part 70, chapter I, title 40 of the Code of Federal Regulations is amended as follows:

PART 70—[AMENDED]

1. The authority citation for part 70 continues to read as follows:

Authority: 42 U.S.C. 7401, *et seq.*

2. Appendix A to part 70 is amended by adding the entry for Utah in alphabetical order to read as follows:

Appendix A to Part 70—Approval Status of State and Local Operating Permits Programs

* * * * *

Utah.

(a) Utah Department of Environmental Quality—Division of Air Quality: submitted on April 14, 1994; effective on July 10, 1995.

(b) [Reserved]

[FR Doc. 95–13927 Filed 6–7–95; 8:45 am]

BILLING CODE 6560–50–P

DEPARTMENT OF TRANSPORTATION

Office of the Secretary

49 CFR Part 1

[OST Docket No. 1; Amdt. 1–270]

Organization and Delegation of Powers and Duties Transfer of Delegations From the Administrator of the Research and Special Programs Administration to the Director of the Bureau of Transportation Statistics

AGENCY: Office of the Secretary, DOT.

ACTION: Final rule.

SUMMARY: Responsibility for the Department's aviation information program has been transferred from the Administrator of the Research and Special Programs Administration to the Director of the Bureau of Transportation Statistics. This rule amends the delegations to be in accordance with the changed responsibilities. The rule is necessary to reflect the delegations in the Code of Federal Regulations.

EFFECTIVE DATE: This rule is effective on May 28, 1995.

FOR FURTHER INFORMATION CONTACT: Steven B. Farbman, Office of the Assistant General Counsel for Regulation and Enforcement (202) 366–9306, United States Department of Transportation, 400 7th Street SW., Washington, DC 20590.

SUPPLEMENTARY INFORMATION: Responsibility for the Department's aviation information program is being transferred from the Administrator of the Research and Special Programs Administration (RSPA) to the Director of the Bureau of Transportation Statistics (BTS). The office within RSPA that has had this responsibility is the Office of Airline Statistics (OAS), formerly known as the Office of Aviation Information Management (OAIM). The name change occurred as part of a 1990 reorganization of RSPA. Although the Code of Federal Regulations (CFR) was not revised to reflect the name change, the industry was informed of the change by a directive issued by RSPA.

The office within BTS that is receiving the responsibility is the Office of Airline Information. This rule

amends the delegations to be in accordance with the transfer. Included among the delegations is the authority to make and amend whatever regulations are necessary to carry out the provisions of 49 U.S.C. 40101 *et seq.*, formerly the Federal Aviation Act of 1958, as amended. (Pub. L. 103–272, enacted July 5, 1994, revised and recodified the Federal Aviation Act within Subtitle VII of Title 49.) We will publish another final rule that will redesignate the Department's regulation that sets forth the authority of the Director of OAIM and will revise those portions of the CFR that still refer to RSPA and OAIM with respect to the aviation information program.

Since this rule relates to departmental management, organization, procedure, and practice, notice and public comment are unnecessary. For the same reason, good cause exists for not publishing this rule at least 30 days before its effective date, as is ordinarily required by 5 U.S.C. 553(d). Because the date of the transfer of responsibility for the aviation information program is May 28, 1995, that is the effective date of this rule.

List of Subjects in 49 CFR Part 1

Authority delegations (Government agencies), Organizations and functions (Government agencies).

PART 1—[AMENDED]

1. The authority citation for Part 1 continues to read as follows:

Authority: 49 U.S.C. 322; Pub. L. 101–552, 28 U.S.C. 2672, 31 U.S.C. 3711(a)(2).

§ 1.2 [Amended]

2. Section 1.2 is amended by adding a new paragraph (j) to read as follows:

* * * * *

(j) The Director of the Bureau of Transportation Statistics.

§ 1.3 [Amended]

3. Section 1.3(b) is amended by adding a new paragraph (b)(10) to read as follows:

* * * * *

(10) The Bureau of Transportation Statistics, headed by the Director.

§ 1.4 [Amended]

4. Section 1.4 is amended by adding a new paragraph (l) to read as follows:

* * * * *

(l) *The Bureau of Transportation Statistics.* Is responsible for:

(1) Compiling, analyzing, and publishing a comprehensive set of transportation statistics to provide timely summaries and total (including industrywide aggregates and multiyear averages) of transportation-related information;

(2) Establishing and implementing, in cooperation with the modal administrators, the States, and other Federal officials, a comprehensive, long-term program for the collection and analysis of data relating to the performance of the national transportation system;

(3) Issuing guidelines for the collection of information by the Department required for statistics to be compiled pursuant to 49 U.S.C. 111(c)(1) in order to ensure that such information is accurate, reliable, relevant, and in a form that permits systematic analysis;

(4) Coordinating the collection of information by the Department required for statistics to be compiled pursuant to 49 U.S.C. 111(c)(1) with related information-gathering activities conducted by the other Federal departments and agencies collecting appropriate data not elsewhere gathered;

(5) Making the statistics published under this subsection readily accessible, in compliance with all disclosure laws, regulations, and requirements; and.

(6) Identifying information that is needed in accordance with 49 U.S.C. 111(c)(1) but which is not being collected, reviewing such needs at least annually with the Advisory Council on Transportation Statistics, and making recommendations to appropriate Department of Transportation research officials concerning extramural and intramural research programs to provide such information.

§ 1.53 [Amended]

5. Section 1.53(g) is removed and reserved.

6. A new § 1.71 is added as follows:

§ 1.71 Delegations to the Director of the Bureau of Transportation Statistics.

The Director of the Bureau of Transportation Statistics is delegated authority to exercise powers and perform duties under the following statutes:

(a) *Aviation information.* (1) 49 U.S.C. 329(b)(1), relating to collection and dissemination of information on civil aeronautics;

(2) Section 4(a)(7) of the Civil Aeronautics Board Sunset Act of 1984 (October 4, 1984; Pub. L. 98–443), relating to the reporting of the extension of unsecured credit to political candidates (section 401, Federal Election Campaign Act of 1971; 2 U.S.C. 451), in conjunction with the General Counsel and the Assistant Secretary for Aviation and International Affairs; and

(3) 49 U.S.C. 40113 (relating to taking such actions and issuing such regulations as may be necessary to carry out responsibilities under the Act), 49 U.S.C. 41702 (relating to the duty of carriers to provide safe and adequate service), 49 U.S.C. 41708 and 41709 (relating to the requirement to keep information and the forms in which it is to be kept), and 49 U.S.C. 41701 (relating to establishing just and reasonable classifications of carriers and rules to be followed by each) as appropriate to carry out the responsibilities under this paragraph in conjunction with the General Counsel and the Assistant Secretary for Aviation and International Affairs.

(b) [Reserve].

Issued at Washington, DC this 25th day of May 1995.

Federico Peña,

Secretary of Transportation.

[FR Doc. 95–13877 Filed 6–7–95; 8:45 am]

BILLING CODE 4910–62–M

National Highway Traffic Safety Administration

49 CFR Part 571

[Docket No. 92–59; Notice 2]

RIN 2127–AE58

Federal Motor Vehicle Safety Standards; Brake Hoses and Motor Vehicle Brake Fluids

AGENCY: National Highway Traffic Safety Administration (NHTSA), Department of Transportation.

ACTION: Final rule.

SUMMARY: This rule amends Federal Motor Vehicle Safety Standards No. 106, *Brake hoses,* and No. 116, *Motor vehicle brake fluids* to specify a new referee material to be used in the compatibility testing of brake hoses and brake fluids. Referee material is used to test specimens of brake hose and fluid for compliance with the standards' requirements. This action is necessary because the present referee material, RM–66–03, will become commercially unavailable. The intended effect of this rule is to ensure the continued availability of the referee material used to test brake hoses and fluids.

DATES: *Effective Date:* This final rule is effective July 10, 1995. The incorporation by reference of certain publications listed in the regulations is approved by the Director of the Federal Register as of July 10, 1995.

Petitions for Reconsideration: Any petition for reconsideration of this final

rule must be received by NHTSA not later than July 10, 1995.

ADDRESSES: Petitions for reconsideration should refer to the docket and notice numbers set forth at the beginning of this rule and be submitted to the following: Administrator, National Highway Traffic Safety Administration, 400 Seventh Street SW., Washington, D.C. 20590. It is requested, but not required, that 10 copies of any petition be submitted.

FOR FURTHER INFORMATION CONTACT: Mr. Richard Carter, Office of Vehicle Safety Standards, National Highway Traffic Safety Administration, 400 Seventh Street, SW Washington, D.C. 20590. Mr. Carter's telephone number is: (202) 366–5274.

SUPPLEMENTARY INFORMATION: Federal Motor Vehicle Safety Standards No. 106, *Brake hoses,* and No. 116, *Motor vehicle brake fluids,* specify performance requirements for brake hoses and motor vehicle brake fluid. Included in the performance requirements for Standard No. 106 is a brake fluid compatibility test, and included in Standard No. 116 are compatibility and chemical stability tests. The procedures for the compatibility and chemical stability tests currently reference the referee material brake fluid specified by the Society of Automotive Engineers (SAE) in J1703. SAE develops, blends, packages, and distributes referee material fluids for use by NHTSA and others for these tests.

Brake fluid compatibility is considered an important factor in establishing brake hose life and strength characteristics. Standard No. 106's compatibility test measures hydraulic brake hose compatibility with brake fluid. The brake hose that is being tested is filled with the SAE Compatibility Fluid for a specified number of hours at specified temperatures, and then is subjected to constriction and burst strength tests. The current compatibility fluid—RM–66–03 Compatibility Fluid (i.e., ''RM–66–03'')—is referenced in the test procedures for the standard's brake fluid compatibility test.

Standard No. 116's compatibility requirements determine the compatibility of brake fluid used in motor vehicles with a referee material. The SAE compatibility fluid that is used in these tests as a referee material should be representative of the fluids found in a braking system in service. The tests measure the compatibility of fluids of different chemical bases by checking whether there are undesirable chemical interactions resulting from the mixture of fluids. Section S6.10 determines the compatibility of a brake fluid with other brake fluids. This section currently references RM–66–03 compatibility fluid as the referee material used in the test procedure.

The current compatibility fluid, RM–66–03, is a blend of four proprietary, commercial brake fluids: Dow HD50–4, Delco Supreme II, Dow 455, and Olin HDS–79. However, because one of these fluids is no longer available and a second one will soon be removed from the market, this compatibility fluid is no longer being produced. Existing quantities of the compatibility fluid have been exhausted. The SAE has already replaced RM–66–03 with a new referee material, RM–66–04.

Rulemaking Petition and Proposal

On December 27, 1991, SAE petitioned the agency to amend portions of Standard No. 106 and Standard No. 116 to specify the RM–66–04 referee material in place of the then used, but soon to be outdated, RM–66–03 compatibility fluid. The RM–66–04 material was developed specifically for the SAE J1703 *Motor Vehicle Brake Fluid* standard. It consists of four American, one Asian and one European fluid, blended equally by volume.

NHTSA proposed amending Standard Nos. 106 and 116 to specify the use of RM–66–04 referee material in place of RM–66–03. 57 FR 49162, October 30, 1992. The agency tentatively concluded that the new compatibility fluid should be specified in the standard since it will be commercially available and the current fluid would not. The agency further believed that the new referee material would be more representative of fluids that will be in service. The agency noted that the International Standards Organization (ISO) is also proposing to use RM–66–04, and that use of the same material would be consistent with international harmonization.

The agency also proposed that the change to the RM–66–04 compatibility fluid be effective on January 1, 1995, but that optional use of RM–66–04 would be permitted 30 days after publication of a final rule. The effective date is discussed further in the ''Effective date'' section.

Comments on the NPRM

In response to the NPRM, the agency received comments from Chrysler, Ford and General Motors. All three commenters supported the wording of the proposed regulatory text. Ford supported the proposed effective date of the amendment and the proposal to permit optional compliance.

Agency Decision

Since all comments supported its proposals, NHTSA adopts the proposals as final. Accordingly, the agency amends S5.3.9 and S6.7.1(a) of Standard No. 106, and S6.5.4.1 through S6.5.4.3, S6.10.1 through S6.10.3(a), and S7.2 of Standard No. 116. In addition, this final rule incorporates by reference Appendix B of SAE Standard J1703 JAN 1995, ''Motor Vehicle Brake Fluid.'' This incorporation by reference was approved by the Director of the Federal Register in accordance with 5 U.S.C. 552(a) and 1 CFR part 51. Copies may be obtained from the Society of Automotive Engineers, 400 Commonwealth Drive, Warrendale, PA 15096. Copies may be inspected at the NHTSA Docket Room, 400 Seventh Street, S.W., Room 5109, Washington, D.C. 20590. (Docket hours are 9:30 a.m. to 4 p.m. Monday through Friday), or at the Office of the Federal Register, 800 North Capitol St., N.W., Suite 700, Washington, D.C.

No adverse impact on safety is anticipated from the use of the new referee material in the test procedures of Standards No. 106 and 116. On the contrary, since the RM–66–03 compatibility fluid is no longer commercially available, ascertaining whether hoses and fluids comply with criteria related to compatibility and boiling points will be difficult. Amending the standards to allow the use of RM–66–04 compatibility fluid in place of RM–66–03 ensures that a compatibility fluid representative of today's brake fluids is readily available for the compliance tests of those standards.

Effective Date

There is good cause for the effective date for this rule. The agency believes an expedited effective date is appropriate since the RM–66–03 material is no longer being produced. Since RM–66–03 is no longer available, manufacturers should be permitted the option of using the new RM–66–04 compatibility fluid almost immediately. This rule permits manufacturers to use the RM–66–04 compatibility fluid 30 days after publication of this rule.

Rulemaking Analyses and Notice

1. Executive Order 12866 and DOT Regulatory Policies and Procedures

This final rule was not reviewed under E.O. 12866, ''Regulatory Planning and Review.'' NHTSA has considered the impact of this rulemaking action under the Department of Transportation's regulatory policies and procedures. The agency believes that a

full regulatory evaluation is not required because the rule will have only minimal economic impacts. The rule will only have a minimal cost impact on manufacturers and users of brake fluids because one referee material will merely replace another referee material. No change is expected in the cost of the new referee material. RM–66–03 fluid was sold at $8.00 per quart. The agency anticipates that RM–66–04 fluid will be sold at the same price.

2. Regulatory Flexibility Act

In accordance with the Regulatory Flexibility Act, NHTSA has evaluated the effects of this action on small entities. Based upon this evaluation, I certify that the final rule would not have a significant economic impact on a substantial number of small entities. Accordingly, no regulatory flexibility analysis has been prepared. The final rule only specifies that manufacturers of brake fluid are to substitute one type of referee material for another type of referee material. Therefore, there should be no cost impacts that would affect the purchase price of brake hoses or brake fluid. Thus, neither manufacturers of motor vehicles, nor small businesses, small organizations, and small governmental units which purchase motor vehicles, would be significantly affected by the amendment.

3. National Environmental Policy Act

The agency has also considered the environmental implications of this final rule in accordance with the National Environmental Policy Act of 1969 and determined that the final rule would not significantly affect the human environment.

4. Executive Order 12612 (Federalism)

This final rule has been analyzed in accordance with the principles and criteria contained in Executive Order 12612. It has been determined that the final rule does not have sufficient Federalism implications to warrant the preparation of a Federalism Assessment. No state laws would be affected.

5. Civil Justice Reform

This final rule would not have any retroactive effect. Under 49 U.S.C. section 30103, whenever a Federal motor vehicle safety standard is in effect, a state may not adopt or maintain a safety standard applicable to the same aspect of performance which is not identical to the Federal standard, except to the extent that the state requirement imposes a higher level of performance and applies only to vehicles procured for the State's use. 49 U.S.C. section 30161 sets forth a procedure for judicial review of final rules establishing, amending or revoking Federal motor vehicle safety standards. That section does not require submission of a petition for reconsideration or other administrative proceedings before parties may file suit in court.

List of Subjects in 49 CFR Part 571

Imports, Incorporation by reference, Motor vehicle safety, Motor vehicles, Rubber and rubber products, Tires.

PART 571—[AMENDED]

In consideration of the foregoing, 49 CFR Part 571 is amended as follows.

1. The authority citation for Part 571 continues to read as follows:

Authority: 49 U.S.C. 322, 30111, 30115, 30117, and 30166; delegation of authority at 49 CFR 1.50.

§ 571.189 [Amended]

2. In Section 571.106, S5.3.9 and paragraph (a) of S6.7.1 are revised to read as follows:

* * * * *

S5.3.9 *Brake fluid compatibility, constriction, and burst strength.* Except for brake hose assemblies designed for use with mineral or petroleum-based brake fluids, a hydraulic brake hose assembly shall meet the constriction requirement of S5.3.1 after having been subjected to a temperature of 200 °F for 70 hours while filled with SAE RM–66–04 Compatibility Fluid, as described in Appendix B of SAE Standard J1703 JAN 1995, ''Motor Vehicle Brake Fluid.'' It shall then withstand water pressure of 4,000 psi for 2 minutes and thereafter shall not rupture at less than 5,000 psi (S6.2). (SAE RM–66–03 Compatibility Fluid, as described in Appendix A of SAE Standard J1703 NOV83, ''Motor Vehicle Brake Fluid,'' November 1983, may be used in place of SAE RM–66–04 until January 1, 1995.)

* * * * *

S6.7.1 *Preparation.*

(a) Attach a hose assembly below a 1-pint reservoir filled with 100 ml. of SAE RM–66–04 Compatibility Fluid as shown in Figure 2. (SAE RM–66–03 Compatibility Fluid, as described in Appendix A of SAE Standard J1703 NOV83, ''Motor Vehicle Brake Fluid,'' November 1983, may be used in place of SAE RM–66–04 until January 1, 1995.)

* * * * *

§ 571.189 [Amended]

3. In Section 571.116, S6.5.4 is republished for the convenience of the reader; S6.5.4.1, S6.5.4.2, S6.5.4.3, S6.10.1, S6.10.2, paragraph (a) of S6.10.3 and S7.2 are revised to read as follows:

S6.5.4 *Chemical stability.*

S6.5.4.1 *Materials.* SAE RM–66–04 Compatibility Fluid as described in Appendix B of SAE Standard J1703 JAN 1995, ''Motor Vehicle Brake Fluid.'' (SAE RM–66–03 Compatibility Fluid as described in Appendix A of SAE Standard J1703 Nov83, ''Motor Vehicle Brake Fluid,'' November 1983, may be used in place of SAE RM–66–04 until January 1, 1995.)

S6.5.4.2 *Procedure.*

(a) Mix 30 ± 1 ml. of the brake fluid with 30 ± 1 ml. of SAE RM–66–04 Compatibility Fluid in a boiling point flask (S6.1.2(a)). Determine the initial ERBP of the mixture by applying heat to the flask so that the fluid is refluxing in 10 ± 2 minutes at a rate in excess of 1 drop per second, but not more than 5 drops per second. Note the maximum fluid temperature observed during the first minute after the fluid begins refluxing at a rate in excess of 1 drop per second. Over the next 15 ± 1 minutes, adjust and maintain the reflux rate at 1 to 2 drops per second. Maintain this rate for an additional 2 minutes, recording the average value of four temperature readings taken at 30 second intervals as the final ERBP.

(b) Thermometer and barometric corrections are not required.

S6.5.4.3 *Calculation.*

The difference between the initial ERBP and the final average temperature is the change in temperature of the refluxing mixture. Average the results of the duplicates to the nearest 0.5 °C (1.0 °F).

* * * * *

S6.10.1 *Summary of the procedure.*

Brake fluid is mixed with an equal volume of SAE RM–66–04 Compatibility Fluid, then tested in the same way as for water tolerance (S6.9) except that the bubble flow time is not measured. This test is an indication of the compatibility of the test fluid with other motor vehicle brake fluids at both high and low temperatures.

S6.10.2 *Apparatus and materials.*

(a) *Centrifuge tube.* See S7.5.1(a).

(b) *Centrifuge.* See S7.5.1(b).

(c) *Cold Chamber.* See S6.7.2(b)

(d) *Oven.* See S6.9.2(d)

(e) *SAE RM–66–04 Compatibility Fluid.* As described in Appendix B of SAE Standard J1703 JAN 1995 ''Motor Vehicle Brake Fluid.'' (SAE RM–66–03 Compatibility Fluid as described in Appendix A of SAE Standard J1703 NOV83, ''Motor Vehicle Brake Fluid,'' November 1983, may be used in place of SAE RM–66–04 until January 1, 1995.)

S6.10.3 *Procedure.*

(a) *At low temperature.*

Mix 50 ± 0.5 ml. of the brake fluid with 50 ± 0.5 ml. of SAE RM–66–04 Compatibility Fluid. Pour this mixture into a centrifuge tube and stopper with a clean dry cork. Place tube in the cold chamber maintained at minus 40° ± 2 °C (minus 40° ± 3.6 °F) After 24 ± 2 hours, remove tube, quickly wipe with a clean lint-free cloth saturated with ethanol (isopropanol when testing DOT 5 fluids) or acetone. Examine the test specimen for evidence of sludging, sedimentation, or crystallization. Test fluids, except DOT 5 SBBF, shall be examined for stratification.

* * * * *

S7.2 *Water content of motor vehicle brake fluids.* Use analytical methods based on ASTM D1123–59, ''Standard Method of Test for Water in Concentrated Engine Antifreezes by the Iodine Reagent Method,'' for determining the water content of brake fluids, or other methods of analysis yielding comparable results. To be acceptable for use, such other method must measure the weight of water added to samples of the SAE RM–66–04 and TEGME Compatibility Fluids within ± 15 percent of the water added for additions up to 0.8 percent by weight, and within ± 5 percent of the water added for additions greater than 0.8 percent by weight. The SAE RM–66–04 Compatibility Fluid used to prepare the samples must have an original ERBP of not less than 205 °C (401 °F) when tested in accordance with S6.1. The SAE TEGME fluid used to prepare the samples must have an original ERBP of not less than 240 °C (464 °F) when tested in accordance with S6.1.

* * * * *

Issued on: June 2, 1995.

Ricardo Martinez,

Administrator.

[FR Doc. 95–13932 Filed 6–7–95; 8:45 am]

BILLING CODE 4910–59–P

DEPARTMENT OF COMMERCE

National Oceanic and Atmospheric Administration

50 CFR Part 672

[Docket No. 950206041–5041–01; I.D. 053095A]

Groundfish of the Gulf of Alaska; Pollock in Area 61

AGENCY: National Marine Fisheries Service (NMFS), National Oceanic and Atmospheric Administration (NOAA), Commerce.

ACTION: Closure.

SUMMARY: NMFS is closing the directed fishery for pollock in Statistical Area 61 in the Gulf of Alaska (GOA). This action is necessary to prevent exceeding the second quarterly allowance for pollock in this area.

EFFECTIVE DATE: 12 noon, Alaska local time (A.l.t.), June 2, 1995, until 12 noon, A.l.t., July 1, 1995.

FOR FURTHER INFORMATION CONTACT: Andrew N. Smoker, 907–586-7228.

SUPPLEMENTARY INFORMATION: The groundfish fishery in the GOA exclusive economic zone is managed by NMFS according to the Fishery Management Plan for Groundfish of the Gulf of Alaska (FMP) prepared by the North Pacific Fishery Management Council under authority of the Magnuson Fishery Conservation and Management Act. Fishing by U.S. vessels is governed by regulations implementing the FMP at 50 CFR parts 620 and 672.

The second quarterly allowance of pollock total allowable catch in Statistical Area 61 was established by the final 1995 harvest specifications of groundfish (60 FR 8470, February 14, 1995) as 7,595 metric tons (mt), determined in accordance with § 672.20(c)(1)(ii)(A).

The Director, Alaska Region, NMFS (Regional Director), has determined, in accordance with § 672.20(c)(2)(ii), that the 1995 second quarterly allowance of pollock in Statistical Area 61 soon will be reached. Therefore, the Regional Director has established a directed fishing allowance of 6,835 mt after determining that 760 mt will be taken as incidental catch in directed fishing for other species in Statistical Area 61 in the GOA. Consequently, NMFS is prohibiting directed fishing for pollock in Statistical Area 61 in the GOA.

Directed fishing standards for applicable gear types may be found in the regulations at § 672.20(g).

Classification

This action is taken under 50 CFR 672.20 and is exempt from review under E.O. 12866.

Authority: 16 U.S.C. 1801 *et seq.*

Dated: June 2, 1995.

Richard W. Surdi,

Acting Director, Office of Fisheries Conservation and Management.

[FR Doc. 95–13953 Filed 6–2–95; 3:04 pm]

BILLING CODE 3510–22–F

50 CFR Part 672

[Docket No. 950206041–5041–01; I.D.053095C]

Groundfish of the Gulf of Alaska; Pollock in Area 63

AGENCY: National Marine Fisheries Service (NMFS), National Oceanic and Atmospheric Administration (NOAA), Commerce.

ACTION: Closure.

SUMMARY: NMFS is prohibiting directed fishing for pollock in Statistical Area 63 in the Gulf of Alaska (GOA). This action is necessary to prevent exceeding the second quarterly allowance for pollock in this area.

EFFECTIVE DATE: 12 noon, Alaska local time (A.l.t.), June 5, 1995, until 12 noon, A.l.t., July 1, 1995.

FOR FURTHER INFORMATION CONTACT: Andrew Smoker, 907–586-7228.

SUPPLEMENTARY INFORMATION: The groundfish fishery in the GOA exclusive economic zone is managed by NMFS according to the Fishery Management Plan for Groundfish of the Gulf of Alaska (FMP) prepared by the North Pacific Fishery Management Council under authority of the Magnuson Fishery Conservation and Management Act. Fishing by U.S. vessels is governed by regulations implementing the FMP at 50 CFR parts 620 and 672.

The second quarterly allowance of pollock total allowable catch in Statistical Area 63 was established by the final 1995 harvest specifications of groundfish (60 FR 8470, February 14, 1995) as 4,078 metric tons (mt), determined in accordance with § 672.20(c)(1)(ii)(A).

The Director, Alaska Region, NMFS (Regional Director), has determined, in accordance with § 672.20(c)(2)(ii), that the 1995 second quarterly allowance of pollock in Statistical Area 63 soon will be reached. Therefore, the Regional Director has established a directed fishing allowance of 3,670 mt after determining that 408 mt will be taken as incidental catch in directed fishing for other species in Statistical Area 63 in the GOA. Consequently, NMFS is prohibiting directed fishing for pollock in Statistical Area 63.

Directed fishing standards for applicable gear types may be found in the regulations at § 672.20(g).

Classification

This action is taken under 50 CFR 672.20 and is exempt from review under E.O. 12866.

Authority: 16 U.S.C. 1801 *et seq.*

Dated: June 2, 1995.

Richard W. Surdi,

Acting Director, Office of Fisheries Conservation and Management, National Marine Fisheries Service.

[FR Doc. 95–13954 Filed 6–2–95; 3:04 pm]

BILLING CODE 3510–22–F

---

50 CFR Part 672

[Docket No. 950206041–5041–01; I.D. 053095B]

Groundfish of the Gulf of Alaska; Pollock in Area 62

AGENCY: National Marine Fisheries Service (NMFS), National Oceanic and Atmospheric Administration (NOAA), Commerce.

ACTION: Closure.

SUMMARY: NMFS is prohibiting directed fishing for pollock in Statistical Area 62 in the Gulf of Alaska (GOA). This action is necessary to prevent exceeding the second quarterly allowance for pollock in this area.

EFFECTIVE DATE: 12 noon, Alaska local time (A.l.t.), June 5, 1995, until 12 noon, A.l.t, July 1, 1995.

FOR FURTHER INFORMATION CONTACT: Andrew Smoker, 907–586-7228.

SUPPLEMENTARY INFORMATION: The groundfish fishery in the GOA exclusive economic zone is managed by NMFS according to the Fishery Management Plan for Groundfish of the Gulf of Alaska (FMP) prepared by the North Pacific Fishery Management Council under authority of the Magnuson Fishery Conservation and Management Act. Fishing by U.S. vessels is governed by regulations implementing the FMP at 50 CFR parts 620 and 672.

The second quarterly allowance of pollock total allowable catch in Statistical Area 62 was established by the final 1995 harvest specifications of groundfish (60 FR 8470, February 14, 1995) as 3,826 metric tons (mt), determined in accordance with § 672.20(c)(1)(ii)(A).

The Director of the Alaska Region, NMFS (Regional Director), has determined, in accordance with § 672.20(c)(2)(ii), that the 1995 second quarterly allowance of pollock in Statistical Area 62 soon will be reached. Therefore, the Regional Director has established a directed fishing allowance of 3,443 mt after determining that 383 mt will be taken as incidental catch in directed fishing for other species in Statistical Area 62 in the GOA. Consequently, NMFS is prohibiting directed fishing for pollock in Statistical Area 62.

Directed fishing standards for applicable gear types may be found in the regulations at § 672.20(g).

Classification

This action is taken under 50 CFR 672.20 and is exempt from review under E.O. 12866.

Authority: 16 U.S.C. 1801 *et seq.*

Dated: June 2, 1995.

Richard W. Surdi,

Acting Director, Office of Fisheries Conservation and Management, National Marine Fisheries Service.

[FR Doc. 95–13955 Filed 6–2–95; 3:04 pm]

BILLING CODE 3510–22–F

Proposed Rules

Federal Register
Vol. 60, No. 110
Thursday, June 8, 1995

This section of the FEDERAL REGISTER contains notices to the public of the proposed issuance of rules and regulations. The purpose of these notices is to give interested persons an opportunity to participate in the rule making prior to the adoption of the final rules.

DEPARTMENT OF HOUSING AND URBAN DEVELOPMENT

Office of Federal Housing Enterprise Oversight

12 CFR Part 1750

RIN 2550–AA03

Minimum Capital

AGENCY: Office of Federal Housing Enterprise Oversight, HUD.

ACTION: Proposed rule.

SUMMARY: The Office of Federal Housing Enterprise Oversight (OFHEO) proposes to issue a regulation for determining the minimum capital requirement for the Federal National Mortgage Association and the Federal Home Loan Mortgage Corporation (collectively, the Enterprises). The proposed regulation defines the necessary terms and sets forth the methodology for computing the minimum capital level. The proposed regulation also establishes procedures for the filing of quarterly minimum capital reports by each Enterprise. In addition, the proposed regulation establishes procedures under which OFHEO will determine the capital classification of each Enterprise on a quarterly basis.

DATES: Written comments on the proposed regulation must be received by August 7, 1995.

ADDRESSES: All comments concerning the proposed regulation should be addressed to Anne E. Dewey, General Counsel, Office of Federal Housing Enterprise Oversight, 1700 G Street NW., 4th Floor, Washington, D.C. 20552. Copies of all communications received will be available for examination by interested parties at the Office of Federal Housing Enterprise Oversight.

FOR FURTHER INFORMATION CONTACT: Gary L. Norton, Deputy General Counsel (202/414–3800); or Michael P. Scott, Assistant Director, Office of Research, Analysis and Capital Standards (202/414–3800), 1700 G Street NW., 4th Floor, Washington, D.C. 20552.

SUPPLEMENTARY INFORMATION:

I. Background

Title XIII of the Housing and Community Development Act of 1992, Pub. L. No. 102–550, known as the Federal Housing Enterprises Financial Safety and Soundness Act of 1992, 12 U.S.C. 4501 *et seq.* (Act), established the Office of Federal Housing Enterprise Oversight (OFHEO). OFHEO is an independent office within the Department of Housing and Urban Development with responsibility for ensuring that the Federal National Mortgage Association (Fannie Mae) and the Federal Home Loan Mortgage Corporation (Freddie Mac) (collectively, the Enterprises) are adequately capitalized and operating in a safe and sound manner. Included among the express statutory authorities of the Director of OFHEO is the authority to issue regulations establishing the capital level requirements.[1]

On February 8, 1995, OFHEO published an Advance Notice of Proposed Rulemaking[2] as the first step toward developing the risk-based capital regulation required by section 1361 of the Act.[3] The risk-based capital requirements will be based on a stress test to be developed by OFHEO. The stress test will determine the amount of capital that an Enterprise must hold to absorb the projected losses associated with credit and interest rate risks during a ten-year period of economic stress. That amount plus an additional 30 percent to cover management and operations risks will constitute the risk-based capital level of the Enterprise.

Separate from the risk-based capital requirements, section 1362 of the Act prescribes the minimum capital requirement for the Enterprises.[4] Unlike the risk-based capital requirements, which are based on the stress test, the minimum capital level is computed largely on the basis of statutorily established ratios that are applied to certain defined on- and off-balance sheet items of the Enterprises.

An Enterprise's capital serves as a cushion to absorb financial losses, thereby reducing the risk of failure. As specified by the Act, the minimum capital level of an Enterprise represents an essential amount of capital needed as protection against the broad categories of risk in its businesses. The minimum capital level is not designed to address the risks of specific exposures within these categories. In addition, none of the capital levels specified in the Act represents the amount needed by an Enterprise to operate safely and soundly under all circumstances.

Section 1364 of the Act[5] requires the Director of OFHEO to determine the capital classification of each Enterprise not less than quarterly. The proposed minimum capital regulation provides procedures for each Enterprise to file a minimum capital level report each quarter and at other times, as required by the Director. In addition, it implements the provisions of section 1368 of the Act,[6] which require OFHEO to provide each Enterprise with notice and an opportunity to comment on its capital classification.

II. Interim Procedures

As discussed below, the Act specifies the minimum capital ratios applicable to on-balance sheet assets and to certain off-balance sheet obligations, *e.g.*, mortgage-backed securities (MBS), but requires adjustment of the minimum capital ratio applicable to other off-balance sheet obligations. Following the appointment of the Director of OFHEO, OFHEO implemented the statutory minimum capital and capital classification provisions by establishing, through administrative action, interim procedures for computing the minimum capital level. These interim procedures will continue to be used until the effective date of the final minimum capital regulation.

On-Balance Sheet Assets

The interim procedures apply the minimum capital ratio applicable to on-balance sheet assets as specified in section 1362(a)(1) of the Act.[7] That section establishes a minimum capital ratio of 2.50 percent of the aggregate on-balance sheet assets of the Enterprises determined in accordance with generally accepted accounting principles (GAAP).

[1] Act, section 1313(b)(1) (12 U.S.C. 4513(b)(1)).
[2] 60 FR 7468, Feb. 8, 1995.
[3] 12 U.S.C. 4611.
[4] 12 U.S.C. 4612.
[5] 12 U.S.C. 4614.
[6] 12 U.S.C. 4618.
[7] 12 U.S.C. 4612(a)(1).

Mortgage-Backed Securities [8]

For MBS, the interim procedures apply the minimum capital ratio specified in section 1362(a)(2) of the Act.[9] That section establishes a minimum capital ratio of 0.45 percent of the unpaid principal balance of outstanding MBS and substantially equivalent off-balance sheet instruments [10] that the Enterprises issue or guarantee. It only applies to MBS and substantially equivalent instruments that are not included among the on-balance sheet items of the Enterprises.

Other Off-Balance Sheet Obligations

Section 1362(a)(3) of the Act [11] requires OFHEO to adjust the minimum capital ratios for off-balance sheet obligations other than MBS. That adjustment must reflect the differences between the credit risk of such obligations and the credit risk of MBS. That section further provides that commitments in excess of 50 percent of the average dollar amount of the commitments outstanding each quarter over the preceding four quarters are to be excluded from minimum capital level computations. The following discussion describes the interim procedures for determining minimum capital requirements for off-balance sheet obligations other than MBS.

Commitments [12]

OFHEO determined that there is no significant difference between the credit risk of commitments and the credit risk of MBS. Therefore, the interim procedures set a minimum capital ratio for commitments of 0.45 percent, which is applied to 50 percent of the average of the dollar amounts of commitments outstanding on the date for which the minimum capital level is being computed and the dates of the three preceding quarter-ends.

Multifamily Credit Enhancements

Multifamily credit enhancements (MFCEs) are guarantees by an Enterprise of payments on multifamily mortgage revenue bonds issued by state and local housing finance agencies. The guarantees permit state and local agencies to obtain a lower cost of funds. The bonds are collateralized by multifamily mortgages to which the Enterprise has recourse in the event of a default. OFHEO concluded that the risk of MFCEs is most analogous to the risk of multifamily MBS. Therefore, the interim procedures apply the minimum capital ratio for MBS (0.45 percent) to the outstanding principal amount of bonds with MFCEs.

Sold Portfolio Remittances Pending

Sold portfolio remittances pending are funds held in custodial accounts awaiting collection by one of the Enterprises for disbursement to the holders of MBS. The obligations associated with these funds arise from the MBS accounting cycle in the accounting system of one of the Enterprises. Once payments of mortgage principal are received by a seller-servicer and placed in custodial accounts, the Enterprise reduces the reported amount of the MBS, or sold portfolio. The Enterprise eventually passes the mortgage principal payments to MBS investors.

OFHEO concluded that the sold portfolio remittances pending are essentially part of MBS. Sold portfolio remittances pending are reflected separately only as a result of the accounting treatment used by one Enterprise. Therefore, the interim procedures apply the same minimum capital ratio for MBS (0.45 percent) to the dollar amount of sold portfolio remittances pending.

Interest Rate and Foreign Exchange Rate Contracts

The Enterprises use interest rate contracts [13] to obtain more desirable financing terms and hedge interest rate risk exposure. Fannie Mae uses foreign exchange rate contracts [14] to fix the United States dollar costs of debt issued in foreign currencies. The credit risk associated with interest rate and foreign exchange rate contracts is the risk of loss that may result when a counterparty defaults.

Because the credit risk of interest rate and foreign exchange rate contracts is not fundamentally different than the risk of those contracts to banks and bank holding companies, the interim procedures apply substantially the same requirements as the risk-based requirements that are applicable to banks and bank holding companies. Those bank-related requirements are contained in guidelines that have been adopted by the Board of Governors of the Federal Reserve System at 12 C.F.R. Part 208, Appendix A, for state member banks, and at 12 C.F.R. Part 225, Appendix A, for bank holding companies; by the Comptroller of the Currency at 12 C.F.R. Part 3, Appendix A, for national banks; and by the Federal Deposit Insurance Corporation at 12 C.F.R. Part 325, Appendix A, for federally insured state nonmember banks (hereinafter referred to as the Guidelines).[15]

The Guidelines convert off-balance sheet items into balance sheet equivalents by determining a credit equivalent amount (CEA) for each item. Risk-weights are applied to the CEA based on the type of counterparty and on the extent to which qualifying collateral has been posted.

The CEA for interest rate and foreign exchange rate contracts is an estimate of the overall credit exposure associated with such contracts. Under the Guidelines, the CEA is the sum of two components: (1) the current exposure and (2) the potential future exposure. The current exposure (often referred to as ''replacement cost'') of a contract is equal to the contract's market value or zero, if its market value is negative. The potential future exposure of an interest rate or foreign exchange rate contract (often referred to as the ''add-on'') is calculated for each contract, regardless of its current market value.[16] Potential future exposure is calculated by multiplying the notional amount of the contract by a credit conversion factor, which is determined by the remaining maturity and by the type of the contract (0.0 percent for interest rate contracts expiring in less than one year and 0.5 percent for those expiring in more than

[8] Mortgage-backed securities are defined in the proposed regulation as securities, investments, or substantially equivalent instruments that represent an interest in a pool of loans secured by mortgages or deeds of trust where the principal or interest payments to the investor in the security or substantially equivalent instrument are guaranteed or effectively guaranteed by an Enterprise.

[9] 12 U.S.C. 4612(a)(2).

[10] An off-balance sheet obligation is defined in the proposed regulation to mean a binding agreement, contract, or similar arrangement that requires or may require future payment(s) in money or kind by another party to an Enterprise or that effectively guarantees all or part of such payment(s) to third parties, where such agreement or contract is a source of credit risk for an Enterprise not included on its balance sheet.

[11] 12 U.S.C. 4612(a)(3).

[12] A commitment is defined in the proposed regulation to mean any contractual, legally binding arrangement that obligates an Enterprise to purchase mortgages for portfolio or securitization.

[13] Interest rate contracts include single currency interest rate swaps, basis swaps, forward rate agreements, interest rate options purchased (including caps, collars, and floors), and other instruments that give rise to similar credit risks (including when-issued securities and forward deposits accepted).

[14] Foreign exchange rate contracts include cross-currency interest rate swaps, forward foreign exchange contracts, currency options purchased, and other instruments that give rise to similar credit risks.

[15] The Guidelines are based upon a framework developed jointly by supervisory authorities from the countries that are represented on the Basle Committee on Banking Regulations and Supervisory Practices.

[16] Because the floating rates associated with basis swaps are highly correlated, potential future exposure is not material; the credit exposure for these contracts is evaluated solely on the basis of the mark-to-market values.

one year; 1.0 percent for foreign exchange contracts expiring in less than one year and 5.0 percent for those expiring in more than a year).

Once the CEA of an interest rate or foreign exchange rate contract has been determined, the amount of the contract is assigned a risk-weight (20 or 50 percent) appropriate to the counterparty or, if relevant, the nature of any collateral or guarantees. Total risk-weighted assets are then multiplied by 8.0 percent [17] to determine the amounts included in the Enterprise's minimum capital level.

The interim procedures allow the Enterprises to recognize the risk-reducing benefits of qualifying bilateral netting contracts as outlined in the Federal Reserve Board's final rule amending the risk-based capital guidelines (59 FR 62987, Dec. 7, 1994). Thus, the Enterprises may net positive and negative mark-to-market values of interest rate and foreign exchange rate contracts in the determination of the current exposure portion of the CEA.

The interim procedures supplement the Guidelines in the area of foreign exchange rate contracts. Fannie Mae includes items associated with foreign exchange rate contracts on its balance sheet. With respect to such contracts, OFHEO determines the amount that would be required under the Guidelines and compares it to the amount that would result from applying the 2.50 percent ratio for on-balance sheet assets contained in the Act, and applies the higher amount.

III. Basis for the Proposed Minimum Capital Regulation [18]

The proposed regulation continues the interim approach with respect to on-balance sheet items, MBS, commitments, multifamily credit enhancements, and sold portfolio remittances pending. However, the proposed regulation modifies the interim approach with respect to interest rate and foreign exchange rate contracts. A discussion of how OFHEO arrived at the approach adopted by the proposed regulation follows.

The Act requires OFHEO to adjust the statutory minimum capital ratio applicable to any class of off-balance sheet obligations if the credit risk of that class of obligations differs from the credit risk of MBS. OFHEO believes that the credit risk of interest rate and foreign exchange rate contracts, as measured by their CEAs, is significantly greater than that of MBS. Accordingly, the proposed regulation contains a minimum capital ratio for interest rate and foreign exchange rate contracts that is higher than the ratio applicable to MBS. Under the proposed regulation, this ratio will be applied to the CEAs of these contracts. The proposed regulation provides a relatively lower ratio for exposures that are collateralized than for those that are not collateralized. However, the proposed regulation does not distinguish between different types of counterparties. The minimum capital amount associated with interest rate and foreign exchange rate contracts under the proposed regulation is not expected to be substantially different than it is under the interim procedures.

Risk of MBS

In developing the proposed regulation, OFHEO analyzed the relative risk of interest rate and foreign exchange rate contracts as compared with MBS. The source of credit risk of MBS to the Enterprises is the risk of defaults and losses on the underlying mortgages. Guarantee fees provide a continuing source of income to offset these losses.

The aggregate risk associated with the Enterprises' underlying mortgages is low because the Enterprises have—

- Very broad geographic diversification;
- Strict and consistent mortgage underwriting standards; and
- Requirements for minimum initial collateralization of 125 percent (*i.e.*, maximum 80 percent loan-to-value ratio) or supplemental mortgage insurance, as well as increasing levels of collateralization as loans amortize and property values increase.

Neither Enterprise has experienced a net credit loss on its MBS. Annual losses to date have ranged from two basis points to ten basis points (expressed as a percentage of the outstanding portfolio) and have been easily covered by guarantee fee income, which has ranged from 20 to 25 basis points.

Risks of Interest Rate and Foreign Exchange Rate Contracts

The Enterprises limit the credit risk of interest rate and foreign exchange rate contracts by restricting their business to high quality counterparties and adjusting collateral requirements on the basis of the current replacement cost and counterparty credit quality of interest rate and foreign exchange rate contracts. Notwithstanding these limitations of risk, interest rate and foreign exchange rate contracts entail the following risks beyond those of MBS:

- Large swings in market rates, on which interest rate and foreign exchange rate contracts are based, may simultaneously increase exposure to, and risk of default by, one or more counterparties, which are typically financial firms.
- While losses may be infrequent, systemic problems could cause disproportionately high losses when they do occur.
- Counterparty risk is concentrated. The loss resulting from the default of a single counterparty could be many times larger than the amount of capital that would be associated with the application of a 0.45 percent capital ratio.
- The interest rate and foreign exchange rate contracts market is

[17] Eight percent represents the required ratio of total capital to risk-weighted assets contained in the Guidelines.

[18] In the course of developing this proposed regulation, OFHEO solicited and received comments and recommendations from the Enterprises regarding alternative approaches. One Enterprise asserted that a low minimum capital ratio for interest rate and foreign exchange rate contracts is justified because these contracts are not used for speculative purposes; credit losses on these contracts have not been experienced; the contracts are mostly executed under master netting agreements with counterparties that are investment-grade; and, depending on counterparty credit quality, require the posting of collateral or other credit enhancements. The Enterprise suggested that OFHEO continue to apply the Guidelines to calculate the CEA to measure the credit exposure of interest rate and foreign exchange rate contracts, but that OFHEO apply a fixed ratio of 0.45 percent to the CEA, rather than apply the 8.00 percent ratio and various risk-weights, as required by the Guidelines. The Enterprise suggested the elimination of risk-weights because it believes they do not measure credit quality. The Enterprise suggested that the enforcement of strict credit and performance standards for its counterparties, coupled with aggressive collateral requirements for credit exposure, eliminates the need for credit differentiation among counterparties and the corresponding risk-weights. The Enterprise also recommended that OFHEO's regulations reflect, without amendment, the proposed and final changes to the Guidelines related to the calculation of current and potential future exposure. These changes would incorporate the impact of bilateral netting in the calculation of credit exposure, extend the capital treatment under the Guidelines to activities other than interest rate and currency contracts, and add higher credit conversion factors for longer-term contracts.

The other Enterprise supported the application of the Guidelines to calculate the CEA and recommended that OFHEO apply, as a starting point, a capital ratio of 0.45 percent to that amount. It made further recommendations that would collectively have the effect of lowering the capital requirements, namely, that OFHEO consider: (1) easing the requirements under which bilateral netting contracts become ''qualifying,'' enabling an institution to ''net'' and thus reduce its current and potential future exposure; (2) increasing the benefit of netting over what proposed amendments to the Guidelines provide by applying the ''net-to-gross ratio'' (the current net positive market value of swaps divided by their current gross positive market value) on a portfolio-wide basis rather than counterparty-by-counterparty, and applying it to 100 percent of the notional amount rather than 50 percent; and (3) adjusting the 0.45 percent capital ratio applied to the CEA of interest rate and foreign exchange rate contracts downward based on the credit ratings of the counterparties, collateral arrangements, and other credit enhancements.

comparatively new; therefore, the functioning of this market is less predictable in terms of operational and legal risk.

- Interest rate and foreign exchange rate contract exposures are not as fully-collateralized as are the mortgages underlying the Enterprises' MBS.
- There is no current stream of fee income to offset losses on interest rate and foreign exchange rate contracts associated with counterparty failures.

The effect of these differences is difficult to quantify. Derivative markets are relatively new. While the Enterprises have not experienced any losses on interest rate or foreign exchange rate contracts, recent losses by major participants make clear that the unexpected, sudden failure of a financial firm that is a counterparty is a risk that must be seriously considered.

Based on a weighing of these factors, the proposed regulation applies a higher ratio to the CEAs of interest rate and foreign exchange rate contracts than to MBS. The proposed regulation applies a ratio of 3.00 percent to uncollateralized exposure and a ratio of 1.50 percent to collateralized exposure. OFHEO believes that the proposed regulation will encourage prudent management of counterparty risk by reducing the capital requirement by half to the extent a counterparty posts collateral that qualifies under the Guidelines. This approach is consistent with a minimum capital level that focuses on the general risk characteristics of instruments rather than the credit quality of third parties.

The proposed regulation continues to allow the Enterprises to recognize the risk-reducing benefits of qualifying bilateral netting contracts. As under the interim procedures, the Enterprises are allowed to net positive and negative mark-to-market values of interest rate and foreign exchange rate contracts in the determination of the current exposure portion of the CEA.[19]

In developing this proposal, OFHEO compared the results of the application of the interim procedures and the proposed regulation with respect to interest rate and foreign exchange rate contracts. For each of the past five quarters, OFHEO determined the weighted average capital ratio that resulted from the application of the interim procedures for all interest rate and foreign exchange rate contracts. The weighted average capital ratio for each Enterprise over this period ranged between 2.24 percent and 3.41 percent. Had the ratios in the proposed regulation been used, the average ratio for each Enterprise would have ranged from 2.32 percent to 3.00 percent. Thus, the application of the ratios in the proposed regulation will result in a minimum capital level roughly consistent with the minimum capital level under the interim procedures.

OFHEO considered the argument that because MBS are accorded a much lower capital ratio by the Act than MBS under the Guidelines, consistency requires that interest rate and foreign exchange rate contracts be accorded a similarly lower ratio. Unlike the Enterprises, institutions subject to the Guidelines do not issue MBS that are fully guaranteed by the institutions. The Guidelines would apply the same capital ratio to MBS backed by the issuers' guarantees as is applied to mortgages held in portfolio. Banks' mortgage loans held in portfolio are considerably more risky than the mortgages underlying the Enterprises' MBS because they are not as well-diversified, on average have experienced higher loss rates, are not required to be as well-collateralized, and are not protected by a stream of guarantee fee income.

OFHEO has also considered the argument that OFHEO should establish a low minimum capital ratio for interest rate and foreign exchange rate contracts in recognition of the steps the Enterprises take to manage that risk. Further, OFHEO has considered the argument that OFHEO should apply different minimum capital ratios for interest rate and foreign exchange rate contracts based on the specific counterparty risk of the contract. OFHEO believes that these arguments are inconsistent with the purpose of minimum capital requirements. The proposed minimum capital regulation is designed to establish an essential amount of capital that an Enterprise, with given levels of outstanding business, must hold to address broad categories of risks. The minimum capital ratios should reflect risk inherent in types of instruments, not the Enterprises' current practices.

IV. Proposed Minimum Capital Regulation: Section-by-Section Summary

The proposed regulation sets forth the minimum capital requirements that will replace the interim procedures currently in use. The proposed minimum capital regulation also establishes procedures for the filing of minimum capital reports by the Enterprises each quarter, or at other times as required by the Director. The proposed minimum capital regulation also requires OFHEO to provide each Enterprise with notice and opportunity to comment on its capital classification. A summary of the treatment of the on- and off-balance sheet items, the filing procedures, and the notice of capital classification follows.

On-Balance Sheet Assets

The minimum capital ratio for on-balance sheet assets is specified in section 1362(a)(1) of the Act.[20] That section establishes a minimum capital ratio equal to 2.50 percent of the aggregate on-balance sheet assets of the Enterprises determined in accordance with GAAP. The proposed regulation adopts that ratio.

Mortgage-Backed Securities

Section 1362(a)(2) of the Act[21] establishes a minimum capital ratio of 0.45 percent of the unpaid principal balance of outstanding MBS and substantially equivalent instruments issued or guaranteed by the Enterprises that are not included in the on-balance sheet assets of the Enterprises. The proposed regulation adopts that ratio.

Other Off-Balance Sheet Obligations

Section 1362(a)(3) of the Act[22] also establishes a minimum capital ratio of 0.45 percent for all other off-balance sheet obligations, except as adjusted by the Director to reflect the differences in the credit risk of those off-balance sheet obligations in relation to MBS and substantially equivalent instruments. The proposed regulation continues the interim treatment for three of the four major categories of off-balance sheet obligations: (1) commitments will require capital equal to 0.45 percent of 50 percent of the average dollar amount

[19] Proposals by the Comptroller of the Currency (59 FR 45243, Sept. 1, 1994) and the Board of Governors of the Federal Reserve System (59 FR 43508, Aug. 24, 1994) would make other changes to the Guidelines. First, they would increase the number of credit conversion factors that are used to measure the potential future exposure, subjecting contracts with longer maturities to higher factors. Second, they would set new credit conversion factors for contracts related to equities, precious metals, and other commodities. (These are not currently relevant to the Enterprises.) Finally, they would change the way that potential future exposure is calculated when the contracts are subject to a qualifying bilateral netting agreement, resulting in a reduction in the amount of capital required for the netted interest rate and foreign exchange rate contracts.

OFHEO will continue to review the progress of the banking agency proposals which permit similar risk-reducing benefits of netting in the calculation of potential future exposure and which address other issues identified in this proposal. OFHEO will make a determination of the appropriateness of the inclusion of these changes in the minimum capital regulation if and when these banking agency proposals become effective.

[20] 12 U.S.C. 4612(a)(1).

[21] 12 U.S.C. 4612(a)(2).

[22] 12 U.S.C. 4612(a)(3).

of commitments outstanding each quarter over the preceding four quarters, (2) multifamily credit enhancements will require capital equal to 0.45 percent of the unpaid principal balance, and (3) sold portfolio remittances pending will require capital equal to 0.45 percent of the dollar amount.[23] Any individual interest rate and foreign exchange rate contract or group of contracts subject to a recognized netting agreement will require capital equal to 3.00 percent of the CEA, except to the extent that the Enterprises hold qualifying collateral. The portion of the CEA equal to the market value of the collateral for that contract or group of contracts will equal 1.50 percent.

Minimum Capital Report

The proposed regulation requires that each Enterprise file with the Director of OFHEO a minimum capital report each quarter or at other times, as required by the Director. The report will contain the information required by OFHEO in written instructions to the Enterprise, including, but not limited to, an estimate of the minimum capital level and an estimate of core capital overage or shortfall relative to the estimated minimum capital level. The proposed regulation provides the Director flexibility to determine the specific items to be included in the minimum capital report. The proposed regulation also addresses the timing, certification, and amendment of the report. The information provided by each Enterprise in the minimum capital report will be used by OFHEO in determining the capital classification of the Enterprise.

Notice of Capital Classification

Section 1368 of the Act[24] requires OFHEO to provide the Enterprises with notice of, and an opportunity to comment on, the proposed minimum capital classification. This proposed regulation provides that before OFHEO determines the capital classification of an Enterprise, OFHEO will provide the Enterprise with written notice of the proposed classification and a 30-day period during which each Enterprise may submit its views regarding the classification. The proposed regulation provides that OFHEO may extend the period for up to 30 days and may shorten the period to less than 30 days if the Director determines that the condition of an Enterprise so warrants. Following the expiration of the response period, OFHEO will take into consideration any comments received from an Enterprise prior to issuing the final notice of capital classification.

Regulatory Impact

Executive Order 12606, The Family

This proposed regulation does not have potential for significant impact on family formulation, maintenance, and general well-being, and thus, is not subject to review under Executive Order 12606.

Executive Order 12612, Federalism

This proposed regulation has no federalism implications that warrant the preparation of a Federalism Assessment in accordance with Executive Order 12612.

Executive Order 12866, Regulatory Planning and Review

This proposed regulation has been reviewed by the Office of Management and Budget pursuant to Executive Order 12866.

Unfunded Mandates Reform Act of 1995

This proposed regulation does not include a federal mandate that may result in the expenditure by State, local, and tribal governments, in the aggregate, or by the private sector, of $100,000,000 or more (adjusted annually for inflation) in any one year. As a result, this proposed regulation does not warrant the preparation of an assessment statement in accordance with the Unfunded Mandates Reform Act of 1995.

Regulatory Flexibility Act

This proposed regulation will not have significant economic impact on a substantial number of small entities.

Paperwork Reduction Act

This proposed regulation contains no information collection requirements that require the approval of the Office of Management and Budget pursuant to the Paperwork Reduction Act of 1980, 44 U.S.C. 3501 *et seq.*

List of Subjects in 12 CFR Part 1750

Minimum capital, capital classifications.

Accordingly, for the reasons set forth in the preamble, OFHEO proposes to amend Chapter XVII of Title 12 of the Code of Federal Regulations by adding Part 1750 to read as follows:

PART 1750—CAPITAL

Subpart A—Minimum Capital

Sec.
1750.1 General.
1750.2 Definition.
1750.3 Procedure and timing.
1750.4 Minimum capital level computation.
1750.5 Notice of capital classification.

Appendix A to Subpart A of Part 1750—Minimum Capital Level Components for Interest Rate and Foreign Exchange Rate Contracts

Subpart B—[Reserved]

Authority: 12 U.S.C. 4513, 4514, 4612, 4614, 4618.

Subpart A—Minimum Capital

§ 1750.1 General.

The regulation contained in this Subpart A establishes the minimum capital requirements for each Enterprise. The board of directors of each Enterprise is responsible for ensuring that the Enterprise maintains capital at a level that is sufficient to ensure the continued financial viability of the Enterprise and in excess of the minimum capital level contained in this Subpart A.

§ 1750.2 Definitions.

For purposes of this Subpart A, the following definitions shall apply.

Act means the Federal Housing Enterprises Financial Safety and Soundness Act of 1992, found at Title XIII of the Housing and Community Development Act of 1992, Pub. L. No. 102–550, 12 U.S.C. 4501 *et seq.*

Affiliate means any entity that controls, is controlled by, or is under common control with, an Enterprise, except as otherwise provided by the Director.

Commitment means any contractual, legally binding arrangement that obligates an Enterprise to purchase mortgages for portfolio or securitization.

Core Capital (1) means the sum of—

(i) the par or stated value of outstanding common stock,

(ii) the par or stated value of perpetual, noncumulative preferred stock,

(iii) paid-in capital, and

(iv) retained earnings; and

(2) Does not include any amounts the Enterprise could be required to pay at the option of an investor to retire capital or debt instruments.

Director means the Director of OFHEO.

Enterprise means the Federal National Mortgage Association and any affiliate thereof or the Federal Home Loan

[23] Freddie Mac accounts for these funds held by seller-servicers in custodial accounts separately from MBS until principal payments are passed on to MBS investors. Fannie Mae includes these custodial accounts in its MBS accounts.

[24] 12 U.S.C. 4618.

Mortgage Corporation and any affiliate thereof.

Foreign exchange rate contracts means cross-currency interest rate swaps, forward foreign exchange contracts, currency options purchased, and any other instruments that give rise to similar credit risks.

Interest rate contracts means single currency interest rate swaps, basis swaps, forward rate agreements, interest rate options purchased (including caps, collars and floors purchased), and any other instruments that give rise to similar credit risks (including when-issued securities and forward deposits accepted).

Mortgage-backed security means a security, investment, or substantially equivalent instrument that represents an interest in a pool of loans secured by mortgages or deeds of trust where the principal or interest payments to the investor in the security or substantially equivalent instrument are guaranteed or effectively guaranteed by an Enterprise.

Multifamily credit enhancement means a guarantee by an Enterprise of the payments on a multifamily mortgage revenue bond issued by a state or local housing finance agency.

Notional amount means the face value of the underlying financial instrument(s) on which an interest rate or foreign exchange rate contract is based.

Off-balance sheet obligation means a binding agreement, contract, or similar arrangement that requires or may require future payment(s) in money or kind by another party to an Enterprise or that effectively guarantees all or part of such payment(s) to third parties, where such agreement or contract is a source of credit risk that is not included on its balance sheet.

OFHEO means the Office of Federal Housing Enterprise Oversight.

Other off-balance sheet obligations means all off-balance sheet obligations of an Enterprise that are not mortgage-backed securities or substantially equivalent instruments.

Perpetual, noncumulative preferred stock means preferred stock that (1) does not have a maturity date, (2) provides the issuer the ability and the legal right to eliminate dividends and does not permit the accruing or payment of impaired dividends, (3) cannot be redeemed at the option of the holder, and (4) has no other provisions that will require future redemption of the issue, in whole or in part, or that will reset the dividend periodically based, in whole or in part, on the Enterprise's current credit standing, such as auction rate, money market, or remarketable preferred stock, or that may cause the dividend to increase to a level that could create an incentive for the issuer to redeem the instrument, such as exploding rate stock.

Qualifying collateral means cash on deposit, securities issued or guaranteed by the central governments of the OECD-based group of countries,[1] United States Government agencies, or United States Government-sponsored agencies, and securities issued or guaranteed by multilateral lending institutions or regional development banks.

§ 1750.3 Procedures and timing.

(a) Each Enterprise shall file with the Director a minimum capital report each quarter or at such other times as the Director requires, in his or her sole discretion. The report shall contain the information that responds to all of the items required by OFHEO in written instructions to the Enterprise, including, but not limited to:

(1) estimate of the minimum capital level;

(2) estimate of core capital coverage or shortfall relative to the estimated minimum capital level;

(3) such other information as may be required by the Director.

(b) The quarterly minimum capital report shall be submitted not later than April 30, July 30, October 30, and January 30 of each year.

(c) Each minimum capital report shall be submitted in writing and in such other format as may be required by the Director.

(d) In the event an Enterprise makes an adjustment to its financial statements for a quarter or a date for which the information was requested, which would cause an adjustment to a minimum capital report, the Enterprise shall file with the Director an amended minimum capital report not later than 3 business days after the date of such adjustment.

(e) Each minimum capital report or any amended minimum capital report shall contain a declaration by an officer authorized by the board of directors of the Enterprise to make such a declaration, including, but not limited to a president, vice president, or treasurer, that the report is true and correct to the best of such officer's knowledge and belief.

§ 1750.4 Minimum capital level computation.

(a) The minimum capital level for each Enterprise shall be computed by adding the following amounts:

(1) 2.50 percent times the aggregate on-balance sheet assets of the Enterprise;

(2) 0.45 percent times the unpaid principal balance of mortgage-backed securities and substantially equivalent instruments that were issued or guaranteed by the Enterprise;

(3) 0.45 percent of 50 percent of the average dollar amount of commitments outstanding each quarter over the preceding four quarters;

(4) 0.45 percent of the outstanding principal amount of bonds with multifamily credit enhancements;

(5) 0.45 percent of the dollar amount of sold portfolio remittances pending;

(6) (i) 3.00 percent of the credit equivalent amount of interest rate and foreign exchange rate contracts except to the extent of the current market value of posted qualifying collateral, computed in accordance with Appendix A to this subpart;

(ii) 1.50 percent of the credit equivalent amount of interest rate and foreign exchange rate contracts equal to the market value of posted qualifying collateral, computed in accordance with Appendix A to this subpart; and

(7) 0.45 percent of the outstanding amount of other off-balance sheet obligations, excluding commitments, multifamily credit enhancements, sold portfolio remittances pending, and interest rate contracts and foreign exchange rate contracts, except as adjusted by the Director to reflect differences in the credit risk of such obligations in relation to mortgage-backed securities.

(b) Any asset or financial obligation that can be properly classified in more than one of the categories enumerated in paragraphs (a)(1) through (7) of this section shall be classified in the category that yields the highest minimum capital level.

(c) As used in this section, the term ''preceding four quarters'' means the last day of the quarter just ended (or the date for which the minimum capital report is filed, if different), and the three preceding quarter-ends.

§ 1750.5 Notice of capital classification.

(a) Pursuant to section 1364 of the Act (12 U.S.C. 4614), OFHEO is required to determine the capital classification of

[1] The OECD-based group of countries is comprised of all full members of the Organization for Economic Cooperation and Development (OECD), as well as countries that have concluded special lending arrangements with the International Monetary Fund (IMF) associated with the Fund's General Arrangements to Borrow. The OECD includes the following countries: Australia, Austria, Belgium, Canada, Denmark, Finland, France, Germany, Greece, Iceland, Ireland, Italy, Japan, Luxembourg, the Netherlands, New Zealand, Norway, Portugal, Spain, Sweden, Switzerland, Turkey, the United Kingdom, and the United States. Saudi Arabia has concluded special lending arrangements with the IMF associated with the IMF's General Arrangements to Borrow.

each Enterprise on a not less than quarterly basis.

(b) The determination of the capital classification shall be made following a notice to, and opportunity to respond by, the Enterprise.

(1) Not later than 60 calendar days after the date for which the minimum capital report is filed, OFHEO will provide each Enterprise with a proposed notice of classification in accordance with section 1368 of the Act (12 U.S.C. 4618). The proposed notice shall contain the following information:

(i) the proposed classification;

(ii) the proposed minimum capital level; and

(iii) the summary computation of the proposed minimum capital level.

(2) Each Enterprise shall have a period of 30 calendar days following receipt of a proposed notice of classification to submit a response regarding the proposed classification. The response period may be extended for up to 30 additional calendar days at the sole discretion of the Director. The Director may shorten the response period with the consent of the Enterprise or without such consent if the Director determines that the condition of the Enterprise requires a shorter period.

(3) The Director shall take into consideration any response to the proposed notice received from the Enterprise and shall issue a final notice of capital classification for each Enterprise not later than 30 calendar days following the end of the response period in accordance with section 1368 of the Act (12 U.S.C. 4618).

Appendix A to Subpart A of Part 1750—Minimum Capital Level Components for Interest Rate and Foreign Exchange Rate Contracts

The minimum capital level components for interest rate and foreign exchange rate contracts are computed on the basis of the credit equivalent amounts of such contracts. Credit equivalent amounts are computed for each of the following off-balance sheet interest rate and foreign exchange rate instruments:

1. *Interest Rate Contracts*

a. Single currency interest rate swaps.

b. Basis swaps.

c. Forward rate agreements.

d. Interest rate options purchased (including caps, collars, and floors).

e. Any other instrument that gives rise to similar credit risks (including when-issued securities and forward deposits accepted).

2. *Foreign Exchange Rate Contracts*

a. Cross-currency interest rate swaps.

b. Forward foreign exchange rate contracts.

c. Currency options purchased.

d. Any other instrument that gives rise to similar credit risks.

Foreign exchange rate contracts with an original maturity of 14 calendar days or less and instruments traded on exchanges that require daily payment of variation margins are excluded from the minimum capital level computation. Over-the-counter options purchased, however, are included and treated in the same way as the other interest rate and foreign exchange rate contracts.

3. *Calculation of Credit Equivalent Amounts*

a. The credit equivalent amount of an off-balance sheet rate contract that is not subject to a qualifying bilateral netting contract in accordance with this Appendix A is equal to the sum of the current exposure (sometimes referred to as the replacement cost) of the contract and an estimate of the potential future credit exposure over the remaining life of the contract.

b. The current exposure is determined by the mark-to-market value of the contract. If the mark-to-market value is positive, then the current exposure is the mark-to-market value. If the mark-to-market value is zero or negative, then the current exposure is zero. Mark-to-market values are measured in United States dollars, regardless of the currency or currencies specified in the contract, and should reflect changes in the relevant rates, as well as counterparty credit quality.

c. The potential future credit exposure of a contract, including a contract with a negative mark-to-market value, is estimated by multiplying the notional principal amount of the contract by a credit conversion factor. The Enterprises shall use the effective rather than the apparent or stated notional amount in this calculation. The credit conversion factors are:

Remaining maturity	Interest rate contracts (percent)	Foreign exchange rate contracts (percent)
One year or less	0.0	1.0
Over one year	0.5	5.0

d. Because foreign exchange rate contracts involve an exchange of principal upon maturity, and foreign exchange rates are generally more volatile than interest rates, higher conversion factors have been established for foreign exchange rate contracts than for interest rate contracts.

e. No potential future credit exposure is calculated for single currency interest rate swaps in which payments are made based upon two floating rate indexes, so-called floating/floating or basis swaps. The credit exposure on these contracts is evaluated solely on the basis of their mark-to-market values.

4. *Avoidance of Double Counting*

In certain cases, credit exposures arising from the interest rate and foreign exchange instruments covered by this Appendix A may already be reflected, in part, on the balance sheet. To avoid double counting such exposures in the assessment of capital adequacy, counterparty credit exposures arising from the types of instruments covered by this Appendix A may need to be excluded from balance sheet assets in calculating the minimum capital level.

5. *Collateral*

The sufficiency of collateral and guarantees for off-balance sheet items is determined by the market value of the collateral in relation to the credit equivalent amount. Collateral held against a netting contract is not recognized for minimum capital level purposes unless it is legally available to support the single legal obligation credit by the netting contract. The only forms of collateral that are formally recognized by the minimum capital level framework are cash on deposit in the bank; securities issued or guaranteed by the central governments of the OECD-based group of countries,[1] United States Government agencies, or United States Government-sponsored agencies; and securities issued by multilateral lending institutions or regional development banks. Excess collateral held against one contract or a group of contracts for which a recognized netting agreement exists may not be considered.

6. *Netting*

a. For purposes of this Appendix A, netting refers to the offsetting of positive and negative mark-to-market values in the determination of a current exposure to be used in the calculation of a credit equivalent amount. Any legally enforceable form of bilateral netting (that is, netting with a single counterparty) of interest rate contracts and foreign exchange rate contracts is recognized for purposes of calculating the credit equivalent amount provided that:

i. The netting is accomplished under a written netting contract that creates a single legal obligation, covering all included individual contracts, with the effect that the Enterprise would have a claim to receive, or obligation to pay, only the net amount of the sum of the positive and negative mark-to-market values on included individual contracts in the event that a counterparty, or a counterparty to whom the contract has been validly assigned, fails to perform due to default, insolvency, liquidation, or similar circumstances.

ii. The Enterprise obtains a written and reasoned legal opinion(s) representing that in the event of a legal challenge—including one resulting from default, insolvency, liquidation, or similar circumstances—the relevant court and administrative authorities would find the Enterprise's exposure to be such a net amount under:

[1] The OECD-based group of countries is comprised of all full members of the Organization for Economic Cooperation and Development (OECD), as well as countries that have concluded special lending arrangements with the International Monetary Fund (IMF) associated with the Fund's General Arrangements to Borrow. The OECD includes the following countries: Australia, Austria, Belgium, Canada, Denmark, Finland, France, Germany, Greece, Iceland, Ireland, Italy, Japan, Luxembourg, the Netherlands, New Zealand, Norway, Portugal, Spain, Sweden, Switzerland, Turkey, the United Kingdom, and the United States. Saudi Arabia has concluded special lending arrangements with the IMF associated with the IMF's General Arrangements to Borrow.

—The law of the jurisdiction in which the counterparty is chartered or the equivalent location in the case of noncorporate entities, and if a branch of the counterparty is involved, then also under the law of the jurisdiction in which the branch is located;
—The law that governs the individual contracts covered by the netting contract; and
—The law that governs the netting contract.

iii. The Enterprise establishes and maintains procedures to ensure that the legal characteristics of netting contracts are kept under review in the event of possible changes in relevant law.

iv. The Enterprise maintains in its files documentation adequate to support the netting of rate contracts, including a copy of the bilateral netting contract and necessary legal opinions.

b. A contract containing a walkaway clause is not eligible for netting for purposes of calculating the credit equivalent amount.[2]

c. By netting individual contracts for the purpose of calculating its credit equivalent amount, the Enterprise represents that it has met the requirements of this Appendix A and all the appropriate documents are in the Enterprise's files and available for inspection by OFHEO. OFHEO may determine that an Enterprise's files are inadequate or that a netting contract, or any of its underlying individual contracts, may not be legally enforceable under any one of the bodies of law described in this Appendix A. If such a determination is made, the netting contract may be disqualified from recognition for minimum capital level purposes or underlying individual contracts may be treated as though they are not subject to the netting contract.

d. The credit equivalent amount of rate contracts that are subject to a qualifying bilateral netting contract is calculated by adding the current exposure of the netting contract and the sum of the estimates of the potential future credit exposures on all individual contracts subject to the netting contract, estimated in accordance with section 3 of this Appendix A. Offsetting contracts in the same currency maturing on the same date will have lower potential future exposure as well as lower current exposure. Therefore, for purposes of calculating potential future credit exposure to a netting counterparty for foreign exchange rate contracts and other similar contracts in which notional principal is equivalent to cash flows, total notional principal is defined as the net receipts falling due on each value date in each currency.

e. The current exposure of the netting contract is determined by summing all positive and negative mark-to-market values of the individual contracts included in the netting contract. If the net sum of the mark-to-market values is positive, then the current exposure of the netting contract is equal to that sum. If the net sum of the mark-to-market values is zero or negative, then the current exposure of the netting contract is zero. OFHEO may determine that a netting contract qualifies for minimum capital level netting treatment even though certain individual contracts may not qualify. In such instances, the nonqualifying contracts should be treated as individual contracts that are not subject to the netting contract.

f. In the event a netting contract covers contracts that are normally excluded from the minimum capital level computation—for example, foreign exchange rate contracts with an original maturity of fourteen calendar days or less, or instruments traded on exchanges that require daily payment of variation margin—an Enterprise may elect consistently either to include or exclude all mark-to-market values of such contracts when determining net current exposure.

[2] A walkaway clause is a provision in a netting contract that permits a non-defaulting counterparty to make lower payments than it would make otherwise under the contract, or no payment at all, to a defaulter or to the estate of a defaulter, even if the defaulter or the estate of the defaulter is a net creditor under the contract.

Subpart B—[Reserved]

Dated: June 1, 1995.

Aida Alvarez,

Director, Office of Federal Housing Enterprise Oversight.

[FR Doc. 95–13913 Filed 6–7–95; 8:45 am]

BILLING CODE 4220–01–P

DEPARTMENT OF TRANSPORTATION

Federal Aviation Administration

14 CFR Part 39

[Docket No. 94–NM–72–AD]

Airworthiness Directives; Boeing Model 757 Series Airplanes Equipped With Pratt & Whitney Engines

AGENCY: Federal Aviation Administration, DOT.

ACTION: Supplemental notice of proposed rulemaking; reopening of comment period.

SUMMARY: This document revises an earlier proposed airworthiness directive (AD), applicable to certain Boeing Model 757 series airplanes, that would have required inspection of certain fuse pins, and replacement of certain fuse pins with certain other fuse pins. That proposal was prompted by the development of new corrosion-resistant steel fuse pins. This action revises the proposed rule by including a requirement for inspections of refinished straight fuse pins and replacement of cracked refinished straight fuse pins with certain other straight fuse pins. The actions specified by this proposed AD are intended to prevent cracking of the midspar fuse pins, which may lead to separation of the strut and engine from the wing of the airplane.

DATES: Comments must be received by June 29, 1995.

ADDRESSES: Submit comments in triplicate to the Federal Aviation Administration (FAA), Transport Airplane Directorate, ANM–103, Attention: Rules Docket No. 94–NM–72–AD, 1601 Lind Avenue, SW., Renton, Washington 98055–4056. Comments may be inspected at this location between 9:00 a.m. and 3:00 p.m., Monday through Friday, except Federal holidays.

The service information referenced in the proposed rule may be obtained from Boeing Commercial Airplane Group, P.O. Box 3707, Seattle, Washington 98124–2207. This information may be examined at the FAA, Transport Airplane Directorate, 1601 Lind Avenue, SW., Renton, Washington.

FOR FURTHER INFORMATION CONTACT: Carrie Sumner, Aerospace Engineer, Airframe Branch, ANM–120S, FAA, Transport Airplane Directorate, Seattle Aircraft Certification Office, 1601 Lind Avenue, SW., Renton, Washington 98055–4056; telephone (206) 227–2778; fax (206) 227–1181.

SUPPLEMENTARY INFORMATION:

Comments Invited

Interested persons are invited to participate in the making of the proposed rule by submitting such written data, views, or arguments as they may desire. Communications shall identify the Rules Docket number and be submitted in triplicate to the address specified above. All communications received on or before the closing date for comments, specified above, will be considered before taking action on the proposed rule. The proposals contained in this notice may be changed in light of the comments received.

Comments are specifically invited on the overall regulatory, economic, environmental, and energy aspects of the proposed rule. All comments submitted will be available, both before and after the closing date for comments, in the Rules Docket for examination by interested persons. A report summarizing each FAA-public contact concerned with the substance of this proposal will be filed in the Rules Docket.

Commenters wishing the FAA to acknowledge receipt of their comments submitted in response to this notice must submit a self-addressed, stamped postcard on which the following statement is made: ''Comments to Docket Number 94–NM–72–AD.'' The postcard will be date stamped and returned to the commenter.

Availability of NPRMs

Any person may obtain a copy of this NPRM by submitting a request to the FAA, Transport Airplane Directorate, ANM–103, Attention: Rules Docket No. 94–NM–72–AD, 1601 Lind Avenue, SW., Renton, Washington 98055–4056.

Discussion

A proposal to amend part 39 of the Federal Aviation Regulations (14 CFR part 39) to add an airworthiness directive (AD), applicable to certain Boeing Model 757 series airplanes, was published as a notice of proposed rulemaking (NPRM) in the **Federal Register** on August 9, 1994 (59 FR 40490). That NPRM would have superseded AD 93–16–09, amendment 39–8666 (58 FR 45044, August 26, 1993) to require:

1. inspections to detect cracking of straight fuse pins,
2. replacement of cracked straight fuse pins with either new 15–5PH corrosion-resistant steel fuse pins or like pins,
3. replacement of bulkhead fuse pins with new 15–5PH corrosion-resistant steel fuse pins, and
4. repetitive inspections of newly-installed fuse pins. (Installation of the new 15–5PH corrosion-resistant steel fuse pins would allow a longer repetitive inspection interval than was previously provided by AD 93–16–09.)

That NPRM was prompted by the development of new 15–5PH corrosion-resistant steel fuse pins. Cracking of the midspar fuse pins, if not detected and corrected in a timely manner, could result in separation of the strut and engine from the wing of the airplane.

Due consideration has been given to the comments received in response to that NPRM.

One commenter requests that the proposal be revised to clarify the replacement requirements. The commenter questions whether straight fuse pins may be replaced independently of the other fuse pins in the same pylon when only one fuse pin is cracked. Further, the commenter questions whether steel fuse pins having part number (P/N) 311N5067–1 may be installed on the same pylon as corrosion-resistant steel (CRES) fuse pins having P/N 311N5217–1. The FAA concurs that clarification is warranted. It is not the FAA's intent to require replacement of uncracked fuse pins. However, the FAA has determined that it is unacceptable to mix the types of fuse pins on the same strut since fuse pin double shear load depends upon the type of fuse pin. Therefore, a steel fuse pin having part number (P/N) 311N5067–1 may not be installed on the same strut that has a corrosion-resistant steel (CRES) fuse pin having P/N 311N5217–1 installed on that strut. However, each strut must have fuse pins of the same type, which may differ from fuse pins on another strut. A new paragraph (e) has been added to this supplemental NPRM to clarify the replacement requirements.

One commenter requests that the proposal be revised to include repetitive inspections of refinished straight fuse pins. The commenter asserts that these pins should be inspected repetitively until cracking is found, at which time they should be replaced with the new 15–5PH fuse pins. The FAA concurs. The FAA's intent was to continue the requirements of AD 93–16–09 to inspect repetitively currently installed refinished straight fuse pins. However, this requirement was inadvertently excluded from the originally issued NPRM; therefore, a new paragraph (b) has been added to this supplemental NPRM to specify this.

[All paragraphs subsequent to paragraph (b) have been redesignated in this supplemental NPRM to accommodate the new paragraph (b).]

One commenter requests that the proposed requirement in paragraph (b) of the NPRM, which would require replacement of the bulkhead fuse pins within 90 days, be extended to 3,000 flight cycles. The commenter notes that there have been no reports of cracking or corrosion on 68 bulkhead fuse pins that had accumulated between 4,500 and 6,000 flight cycles. Further, the commenter states that its suggested 3,000-flight cycle compliance time will not adversely affect safety, since test results indicate that these fuse pins will maintain limit load beyond 5,000 flight cycles after the detection of an initial crack. Additionally, the commenter asserts that the fail-safe capability of the strut on Model 757 series airplanes can withstand full limit load with a total failure (i.e., failure of both shear planes) of the midspar fuse pin.

The FAA concurs. The FAA has reviewed the test data submitted by this commenter and has determined that extending the compliance time for replacement to 3,000 flight cycles will not adversely affect safety, since the strut of Model 757 series airplanes has fail-safe capability and can withstand full limit load, even with total failure of a midspar fuse pin. Paragraph (c) of this supplemental NPRM specifies this revised compliance time.

One commenter requests that the proposed repetitive inspection interval of 3,000 flight cycles for inspection of the new 15–5PH fuse pins be revised to coincide with operators' regularly scheduled maintenance visits at 3,500 landings. The FAA concurs. The FAA finds that extending the compliance time by 500 flight cycles will not adversely affect safety, and will allow the modification to be performed at a base during regularly scheduled maintenance where special equipment and trained maintenance personnel will be available if necessary. Therefore, paragraphs (a)(2)(ii), (d)(1), and (d)(2)(ii) of the supplemental NPRM specify a repetitive inspection interval of 3,500 flight cycles for inspection of the new 15–5PH corrosion-resistant steel fuse pins.

One commenter states that Boeing Service Bulletin 757–54A0019, Revision 5, dated March 17, 1994 (which is referenced in the proposal as the appropriate source of service information), does not describe procedures for eddy current inspections of the new 15–5PH corrosion-resistant steel fuse pins. Therefore, the commenter requests that the proposal be revised to reference another source of service information for accomplishing the eddy current inspections. The FAA does not concur. However, since these procedures are the same as those for the old style fuse pins, part number 311N5067–1, the FAA finds that the procedures in the referenced service bulletin also apply to the new 15–5PH fuse pins. Therefore, paragraph (a)(1)(ii) and (d)(2)(ii) of this supplemental NPRM reference the procedures described in the service bulletin to perform the eddy current inspections of the new 15–5PH corrosion-resistant steel fuse pins.

The FAA has recently reviewed the figures it has used over the past several years in calculating the economic impact of AD activity. In order to account for various inflationary costs in the airline industry, the FAA has determined that it is necessary to increase the labor rate used in these calculations from $55 per work hour to $60 per work hour. The economic impact information, below, has been revised to reflect this increase in the specified hourly labor rate.

As a result of recent communications with the Air Transport Association (ATA) of America, the FAA has learned that, in general, some operators may misunderstand the legal effect of AD's on airplanes that are identified in the applicability provision of the AD, but that have been altered or repaired in the area addressed by the AD. The FAA points out that all airplanes identified in the applicability provision of an AD are legally subject to the AD. If an airplane has been altered or repaired in the affected area in such a way as to affect

compliance with the AD, the owner or operator is required to obtain FAA approval for an alternative method of compliance with the AD, in accordance with the paragraph of each AD that provides for such approvals. A note has been included in this supplemental notice to clarify this long-standing requirement.

Since these changes expand the scope of the originally proposed rule, the FAA has determined that it is necessary to reopen the comment period to provide additional opportunity for public comment.

There are approximately 273 Model 757 series airplanes equipped with Pratt & Whitney engines of the affected design in the worldwide fleet. The FAA estimates that 237 airplanes of U.S. registry would be affected by this proposed AD.

The inspections that were previously required by AD 93–16–09, and retained in this supplemental proposal take approximately 8 work hours per fuse pin at an average labor rate of $60 per work hour. There are 4 fuse pins per airplane. Based on these figures, the total cost impact of these inspections on U.S. operators is estimated to be $455,040, or $1,920 per airplane, per cycle. However, since the integrity and strength of the new steel fuse pins permit longer inspection intervals, the cost impact for these inspections would actually be lessened because the proposed inspections are not required to be performed as frequently as currently required by AD 93–16–09.

The proposed replacement would take approximately 56 work hours per fuse pin at an average labor rate of $60 per work hour. (There are 4 fuse pins per airplane.) Required parts would be provided by the manufacturer at no cost to the operator. Based on these figures, the total cost impact of the proposed replacement on U.S. operators is estimated to be $3,185,280, or $13,440 per airplane.

The total cost impact figures discussed above are based on assumptions that no operator has yet accomplished any of the proposed requirements of this AD action, and that no operator would accomplish those actions in the future if this AD were not adopted.

The FAA recognizes that the obligation to maintain aircraft in an airworthy condition is vital, but sometimes expensive. Because AD's require specific actions to address specific unsafe conditions, they appear to impose costs that would not otherwise be borne by operators. However, because of the general obligation of operators to maintain aircraft in an airworthy condition, this appearance is deceptive. Attributing those costs solely to the issuance of this AD is unrealistic because, in the interest of maintaining safe aircraft, most prudent operators would accomplish the required actions even if they were not required to do so by the AD.

A full cost-benefit analysis has not been accomplished for this proposed AD. As a matter of law, in order to be airworthy, an aircraft must conform to its type design and be in a condition for safe operation. The type design is approved only after the FAA makes a determination that it complies with all applicable airworthiness requirements. In adopting and maintaining those requirements, the FAA has already made the determination that they establish a level of safety that is cost-beneficial. When the FAA, as in this proposed AD, makes a finding of an unsafe condition, this means that this cost-beneficial level of safety is no longer being achieved and that the proposed actions are necessary to restore that level of safety. Because this level of safety has already been determined to be cost-beneficial, a full cost-benefit analysis for this proposed AD would be redundant and unnecessary.

The regulations proposed herein would not have substantial direct effects on the States, on the relationship between the national government and the States, or on the distribution of power and responsibilities among the various levels of government. Therefore, in accordance with Executive Order 12612, it is determined that this proposal would not have sufficient federalism implications to warrant the preparation of a Federalism Assessment.

For the reasons discussed above, I certify that this proposed regulation (1) is not a ''significant regulatory action'' under Executive Order 12866; (2) is not a ''significant rule'' under the DOT Regulatory Policies and Procedures (44 FR 11034, February 26, 1979); and (3) if promulgated, will not have a significant economic impact, positive or negative, on a substantial number of small entities under the criteria of the Regulatory Flexibility Act. A copy of the draft regulatory evaluation prepared for this action is contained in the Rules Docket. A copy of it may be obtained by contacting the Rules Docket at the location provided under the caption **ADDRESSES.**

List of Subjects in 14 CFR Part 39

Air transportation, Aircraft, Aviation safety, Safety.

The Proposed Amendment

Accordingly, pursuant to the authority delegated to me by the Administrator, the Federal Aviation Administration proposes to amend part 39 of the Federal Aviation Regulations (14 CFR part 39) as follows:

PART 39—AIRWORTHINESS DIRECTIVES

1. The authority citation for part 39 continues to read as follows:

Authority: 49 U.S.C. App. 1354(a), 1421 and 1423; 49 U.S.C. 106(g); and 14 CFR 11.89.

§ 39.13 [Amended]

2. Section 39.13 is amended by removing amendment 39–8666 (58 FR 45044, August 26, 1993), and by adding a new airworthiness directive (AD), to read as follows:

Boeing: Docket 94–NM–72–AD. Supersedes AD 93–16–09, Amendment 39–8666.

Applicability: Model 757 series airplanes equipped with Pratt & Whitney engines, certificated in any category.

Note 1: This AD applies to each airplane identified in the preceding applicability provision, regardless of whether it has been modified, altered, or repaired in the area subject to the requirements of this AD. For airplanes that have been modified, altered, or repaired so that the performance of the requirements of this AD is affected, the owner/operator must use the authority provided in paragraph (f) of this AD to request approval from the FAA. This approval may address either no action, if the current configuration eliminates the unsafe condition; or different actions necessary to address the unsafe condition described in this AD. Such a request should include an assessment of the effect of the changed configuration on the unsafe condition addressed by this AD. In no case does the presence of any modification, alteration, or repair remove any airplane from the applicability of this AD.

Compliance: Required as indicated, unless accomplished previously.

Note 2: Inspections accomplished prior to the effective date of this amendment in accordance with the procedures described in Boeing Service Bulletin 757–54A0019, Revision 4, dated May 27, 1993; Revision 3, dated March 26, 1992; or Revision 2, dated October 11, 1989; are considered acceptable for compliance with the applicable inspection specified in this amendment.

To prevent cracking of the midspar fuse pins, which may lead to separation of the strut and engine from the wing of the airplane, accomplish the following:

(a) For airplanes equipped with straight fuse pins, part number (P/N) 311N5067–1: Prior to the accumulation of 3,800 total flight cycles on the straight fuse pin, perform an eddy current inspection to detect cracking in the straight fuse pins, in accordance with Boeing Service Bulletin 757–54A0019, Revision 5, dated March 17, 1994.

(1) If no cracking is detected, repeat the inspection thereafter at intervals not to exceed 1,000 flight cycles on the straight fuse pin.

(2) If any cracking is detected, prior to further flight, accomplish the requirements of either paragraph (a)(2)(i) or (a)(2)(ii) of this AD.

(i) Replace the cracked straight fuse pin with a new straight fuse pin, P/N 311N5067–1. Prior to the accumulation of 3,800 total flight cycles on that newly installed straight fuse pin, perform an eddy current inspection to detect cracking in that straight fuse pin, in accordance with the service bulletin. Repeat the inspection thereafter at intervals not to exceed 1,000 flight cycles on that newly installed straight fuse pin. Or

(ii) Replace the cracked straight fuse pin with a new 15–5PH fuse pin, P/N 311N5217–1. Prior to the accumulation of 14,000 total flight cycles on that newly installed 15–5PH fuse pin, perform an eddy current inspection to detect cracking in that newly installed 15–5PH fuse pin, in accordance with the procedures described in the service bulletin. Repeat the inspection thereafter at intervals not to exceed 3,500 flight cycles on that newly installed 15–5PH fuse pin.

(b) For airplanes equipped with refinished straight fuse pins, P/N 311N5067–1: Prior to the accumulation of 1,000 total flight cycles on the refinished straight fuse pin, perform an eddy current inspection to detect cracking in the refinished straight fuse pins, in accordance with Boeing Service Bulletin 757–54A0019, Revision 5, dated March 17, 1994.

(1) If no cracking is detected, repeat the inspection thereafter at intervals not to exceed 1,000 flight cycles on the refinished straight fuse pin.

(2) If any cracking is detected, prior to further flight, accomplish the requirements of either paragraph (b)(2)(i), (b)(2)(ii), or (b)(2)(iii) of this AD, in accordance with the service bulletin.

(i) Replace the cracked refinished straight fuse pin with a crack-free refinished straight fuse pin, P/N 311N5067–1. Prior to the accumulation of 1,000 total flight cycles on that newly installed refinished straight fuse pin, perform an eddy current inspection to detect cracking in that newly installed refinished straight fuse pin, in accordance with the procedures described in the service bulletin. Repeat this inspection thereafter at intervals not to exceed 1,000 flight cycles on the newly installed refinished straight fuse pin. Or

(ii) Replace the cracked refinished straight fuse pin with a new straight fuse pin, P/N 311N5067–1. Prior to the accumulation of 3,800 total flight cycles on that newly installed straight fuse pin, perform an eddy current inspection to detect cracking in that newly installed straight fuse pin, in accordance with the service bulletin. Repeat the inspection thereafter at intervals not to exceed 1,000 flight cycles on that newly installed straight fuse pin. Or

(iii) Replace the cracked refinished straight fuse pin with a new 15–5PH fuse pin, P/N 311N5217–1. Prior to the accumulation of 14,000 total flight cycles on that newly installed 15–5PH fuse pin, perform an eddy current inspection to detect cracking in that newly installed 15–5PH pin, in accordance with the procedures described in the service bulletin. Repeat the inspection thereafter at intervals not to exceed 3,500 flight cycles on that newly installed 15–5PH fuse pin.

(c) For airplanes equipped with bulkhead fuse pins, P/N 311N5211–1: Within 3,000 flight cycles after the effective date of this AD, replace the bulkhead fuse pins with 15–5PH fuse pins, P/N 311N5217–1, in accordance with Boeing Service Bulletin 757–54A0019, Revision 5, dated March 17, 1994, and accomplish the requirements of paragraph (d) of this AD.

(d) For airplanes equipped with 15–5PH fuse pins: Prior to the accumulation of 14,000 total flight cycles on the 15–5PH fuse pins, perform an eddy current inspection to detect cracking in those 15–5PH fuse pins, in accordance with the procedures described in Boeing Service Bulletin 757–54A0019, Revision 5, dated March 17, 1994.

(1) If no cracking is detected, repeat the inspection thereafter at intervals not to exceed 3,500 flight cycles on the 15–5PH fuse pin.

(2) If any cracking is detected, accomplish the requirements of both paragraphs (d)(2)(i) and (d)(2)(ii) of this AD.

(i) Prior to further flight, replace any cracked 15–5PH fuse pin with a new 15–5PH fuse pin, P/N 311N5217–1, in accordance with the procedures described in the service bulletin. And

(ii) Prior to the accumulation of 14,000 total flight cycles on that newly installed 15–5PH fuse pin, perform an eddy current inspection to detect cracking in that newly installed 15–5PH fuse pin, in accordance with the procedures described in the service bulletin. Repeat the inspection thereafter at intervals not to exceed 3,500 flight cycles on that newly installed 15–5PH fuse pin.

(e) Fuse pins must be of the same type on the same strut. For example, a steel fuse pin having P/N 311N5067–1 may not be installed on the same strut that has a corrosion-resistant steel (CRES) fuse pin having P/N 311N5217–1 installed on that strut. However, fuse pins on one strut may differ from those on another strut, provided the fuse pins are not of mixed types on the same strut.

(f) An alternative method of compliance or adjustment of the compliance time that provides an acceptable level of safety may be used if approved by the Manager, Seattle Aircraft Certification Office (ACO), FAA, Transport Airplane Directorate. Operators shall submit their requests through an appropriate FAA Principal Maintenance Inspector, who may add comments and then send it to the Manager, Seattle ACO.

Note 3: Information concerning the existence of approved alternative methods of compliance with this AD, if any, may be obtained from the Seattle ACO.

(g) Special flight permits may be issued in accordance with sections 21.197 and 21.199 of the Federal Aviation Regulations (14 CFR 21.197 and 21.199) to operate the airplane to a location where the requirements of this AD can be accomplished.

Issued in Renton, Washington, on June 2, 1995.

Darrell M. Pederson,

Acting Manager, Transport Airplane Directorate, Aircraft Certification Service.

[FR Doc. 95–14055 Filed 6–7–95; 8:45 am]

BILLING CODE 4910–13–U

DEPARTMENT OF THE TREASURY

Internal Revenue Service

26 CFR Part 301

[INTL–0024–94]

RIN 1545–AS83

Taxpayer Identifying Numbers (TIN)

AGENCY: Internal Revenue Service (IRS), Treasury.

ACTION: Withdrawal of notice of proposed rulemaking; Notice of proposed rulemaking and notice of public hearing.

SUMMARY: This document withdraws the notice of proposed rulemaking relating to taxpayer identifying numbers published in the **Federal Register** on September 27, 1990, at 55 FR 39486. This document also contains proposed amendments to the regulations relating to requirements for furnishing a taxpayer identifying number on returns, statements, or other documents. These amendments set forth procedures for requesting a taxpayer identifying number for certain alien individuals for whom a social security number is not available. These numbers would be called ''IRS individual taxpayer identification numbers.'' These amendments also require certain foreign persons to furnish a taxpayer identifying number on their tax returns. This document also provides notice of a public hearing on these proposed regulations.

DATES: Written comments and outlines of the oral comments to be presented at the public hearing scheduled for 10 a.m. on September 28, 1995, must be received by September 7, 1995.

ADDRESSES: Send submissions to: CC:DOM:CORP:T:R (INTL–0024–94), room 5228, Internal Revenue Service, POB 7604, Ben Franklin Station, Washington, DC 20044. In the alternative, submissions may be hand delivered between the hours of 8 a.m. and 5 p.m. to: CC:DOM:CORP:T:R (INTL–0024–94), Courier's Desk, Internal Revenue Service, 1111 Constitution Avenue NW., Washington, DC. The public hearing will be held in the Internal Revenue Service Auditorium, 7400 corridor, 1111

Constitution Avenue, NW., Washington, DC.

FOR FURTHER INFORMATION CONTACT: Concerning the regulations, Lilo A. Hester (202) 874–1490; concerning submissions and the hearing, Christina Vasquez (202) 622–7180 (not a toll-free numbers).

SUPPLEMENTARY INFORMATION:

Paperwork Reduction Act

The collection of information contained in this notice of proposed rulemaking has been submitted to the Office of Management and Budget for review in accordance with the Paperwork Reduction Act (44 U.S.C. 3504(h)). Comments on the collection of information should be sent to the Office of Management and Budget, Attn: Desk Officer for the Department of the Treasury, Office of Information and Regulatory Affairs, Washington, DC 20503, with copies to the Internal Revenue Service, Attn: IRS Reports Clearance Officer, PC:FP, Washington, DC 20224.

The collection of information from certain resident alien individuals and foreign persons required to furnish taxpayer identifying numbers under section 6109 of the Internal Revenue Code (Code) is found in § 301.6109–1. This information will be used by the IRS for tax administration purposes. The likely respondents and recordkeepers are certain resident alien individuals and foreign persons such as nonresident alien individuals and foreign corporations who make a return of tax.

The burden for the collection of information contained in § 301.6109–1(d) is reflected in the burden of Form W–7.

Background

This document withdraws the notice of proposed rulemaking under section 6109 published in the **Federal Register** on September 27, 1990 at 55 FR 39486. This document also contains proposed amendments to 26 CFR part 301 to provide rules under section 6109 of the Internal Revenue Code relating to a new type of taxpayer identifying number.

Explanation of Provisions

In General

Section 6109(a) of the Code provides that, when required by regulations, a person must furnish a taxpayer identifying number (TIN) for securing proper identification of that person on any return, statement, or other document made under the Code. The assignment of a unique and permanent number to each taxpayer is important for the effective operation of the IRS automatic data processing system. The numbering system improves the IRS' ability to identify and access database records; to match information provided on tax and information returns, statements, and other documents with the proper taxpayers; and to provide better customer service to taxpayers.

The Treasury Department and the IRS are concerned about individuals who are filing tax returns but who are unable to obtain a social security number. In order to insure that all taxpayers required to provide a TIN for tax purposes are able to obtain one, the IRS is developing a separate numbering system that will make unique and permanent numbers available to those individuals. The proposed regulations explain how alien individuals, whether resident or nonresident, can obtain an IRS individual taxpayer identification number from the IRS.

The regulations require any foreign person who makes a return to provide a TIN on the return. This TIN may be an employer identification number, a social security number, or a new IRS individual taxpayer identification number in the case of an alien individual who does not have a social security number and cannot obtain one.

The Treasury Department and the IRS are also considering changes to the procedures that apply to withholding tax on payments to foreign persons in order to encourage compliance and reduce paperwork burden. The Treasury Department and the IRS are aware that significant changes in this area will impact some aspects of transactions subject to withholding. Accordingly, the Treasury Department and the IRS intend to move very cautiously, particularly by considering the possible effect of changes in these procedures on investment decisions by foreign persons and by considering the adequacy of existing procedures for those taxpayers who wish to continue to comply with current rules. Generally, no new procedures will be adopted without adequate opportunity for public comment and appropriate transition periods before taking effect. This will not, however, preclude the Treasury Department and the IRS from adopting new procedures to replace the current address rule for dividends.

Specific Changes

The most significant changes proposed by these regulations are described below. The first change is the introduction of a new IRS-issued TIN for use by alien individuals who currently do not have, and are not eligible to obtain, social security numbers. The number is called an IRS individual taxpayer identification number (ITIN). This number is intended to be issued to alien individuals, whether resident or nonresident, who are currently required to furnish a number for tax purposes but who are not entitled to obtain social security numbers. Therefore, these amendments are designed to help taxpayers maintain compliance with TIN requirements under the Code and regulations. The Social Security Administration limits its assignment of social security numbers to individuals who are U.S. citizens and alien individuals legally admitted to the United States for permanent residence or under other immigration categories which authorize U.S. employment. Therefore, IRS-issued numbers are necessary for those individuals who need a TIN but cannot qualify for a social security number.

The second change is to modify the existing rule set forth in § 301.6109–1(g) that currently excludes from the general requirement of providing a TIN, foreign persons that do not have either (1) income effectively connected with the conduct of a U.S. trade or business or (2) a U.S. office or place of business or a U.S. fiscal or paying agent. Under the proposed regulations, the exclusion is modified to require that any foreign person who makes a return of tax furnish its TIN on that return. This change is intended solely to address the IRS' and Treasury's concern that, without TINs, taxpayers cannot be identified and tax returns cannot be processed effectively.

The Treasury Department and the IRS are giving added thought to applying the TIN requirement to facilitate changes to the procedures that apply to withholding taxes on payments to foreign persons. Decisions with respect to the withholding tax system have yet to be made, and when made, will be proposed in subsequent regulations. The Treasury Department and the IRS will proceed cautiously in expanding the scope of the TIN requirement and will consider the adequacy of existing procedures for those taxpayers who wish to continue to comply with current rules.

The IRS individual taxpayer identification numbers issued under this regulation will differ from, and replace, the ''temporary'' TINs the IRS currently issues under the authority of section 6109(c). For example, after declaring in Rev. Rul. 84–158, 1984–2 C.B. 262, that a partnership must request the social security numbers of its individual partners (including a nonresident alien limited partner), the IRS announced in Rev. Rul. 85–61, 1985–1 C.B. 355, that it would issue

temporary numbers to nonresident alien limited partners who do not have, and cannot obtain, social security numbers. All of these temporary numbers, however, will be retired upon subsequent revocation of these revenue rulings.

IRS individual taxpayer identification numbers are intended for tax use only. For example, the numbers will create no inference regarding the immigration status of a foreign person or the right of that person to be legally employed in the United States. The IRS individual taxpayer identification numbers and the information obtained by the IRS as a result of issuing numbers constitute confidential taxpayer information. Section 6103 strictly prohibits the disclosure of this information to other government agencies, private entities, or citizens. Disclosure in violation of the restrictions under section 6103 may lead to civil or criminal penalties.

Section-by-Section Analysis

Proposed § 301.6109–1(a)(1)(i) provides a general description of the types of TINs, including the new IRS individual taxpayer identification number. The IRS individual taxpayer identification number will begin with a specific number designated by the IRS and will otherwise resemble a social security number. Proposed § 301.6109–1(a)(1)(ii) provides general rules for use of the different TINs, including the rule for an estate to obtain and furnish its employer identification number when required, such as in its capacity as a payor or payee of royalties. This rule for estates was announced previously in the proposed regulations under section 6109 published in the **Federal Register** at 55 FR 39486 on September 27, 1990.

The requirement for foreign persons to provide a TIN if they have income effectively connected with the conduct of a U.S. trade or business, if they have a U.S. office or place of business, or a U.S. fiscal or paying agent during the taxable year, or if they are treated as resident alien individuals under section 6013(g) or (h), is restated without change in proposed §§ 301.6109–1(b)(2) and (c). However, proposed § 301.6109–1(b)(2)(iv) modifies the exclusion currently provided in § 301.6109–1(g) with respect to other foreign persons by providing that a foreign person filing a return of tax is subject to the TIN requirements under section 6109. For this purpose, a return of tax includes income, estate, and gift tax returns but excludes information returns, statements or other documents. This requirement is proposed to be effective for foreign persons who file returns of tax after December 31, 1995.

The provisions of § 301.6109–1(d)(2) dealing with obtaining an employer identification number are unchanged except to specify that a Form SS–4 will be available from U.S. consular offices abroad. This change is intended to accommodate those foreign persons that are required to provide an employer identification number.

The procedures governing the new IRS individual taxpayer identification number, including procedures for obtaining such a number, are set forth in proposed § 301.6109–1(d)(3). An IRS individual taxpayer identification number is applied for on Form W–7, Application for IRS Individual Taxpayer Identification Number. Under normal procedures, the application is submitted to the IRS for processing together with required documentation designed to substantiate foreign status, as well as true identity. Further guidance will be issued to specify the types of acceptable documentation. Because the IRS intends to rely as much as possible on the identifying documents that are customarily used in a foreign jurisdiction to identify a resident in that jurisdiction, the documentation requirements are likely to vary from country to country. Comments and suggestions are solicited regarding the type of documents that could be used reliably to establish the identity of taxpayers and their foreign status.

The IRS is planning a wide distribution of application forms in the United States and abroad and will insure that the form is easily available to the public. Further, in order to facilitate the application process and to expedite the issuance of the TINs, the regulations propose to authorize agreements that would permit certain persons to act as an applicant's agent. These agents are called acceptance agents. Generally, an acceptance agent may include financial institutions or educational institutions, i.e., institutions that are likely to come in contact with a large number of foreign taxpayers earning U.S. source income and that can establish to the IRS that they have the resources and procedures necessary to undertake the duties expected from an acceptance agent.

Under an agreement with the IRS, an acceptance agent would assume responsibility for providing the necessary information to the IRS for the issuance of a number, together with a certification that the applicant is a foreign person. The certification would be issued on the basis of prescribed documentation obtained from the applicant. Under this procedure, no documentation generally would be required to be furnished to the IRS, except as part of a verification process by which the IRS may periodically verify the agent's compliance with the agreement. In order to streamline the process and facilitate the agent's due diligence under the agreement, the agreement would specify the type of documentation that must be obtained to verify foreign status and true identity of an applicant.

Proposed § 301.6109–1(d)(4) provides rules for the coordination of the different TINs. A person entitled to a social security number will not be issued an IRS individual taxpayer identification number. Once a person has a social security number, that number must be used for all tax purposes, even though the person is a nonresident alien. A nonresident alien who is issued an IRS individual taxpayer identification number and later becomes entitled to a social security number (e.g., becomes a U.S. resident under an immigration visa) must apply for a social security number and must stop using the IRS number. IRS matching systems will help the IRS detect taxpayers who are incorrectly using an IRS individual taxpayer identification number. The IRS will contact those individuals and request that they obtain a social security number.

Section 301.6109–1(f) is modified to cross reference the new penalty provisions under sections 6721 through 6724.

Proposed § 301.6109–1(g)(1) provides the general rule that, in the IRS records, a person with a social security number or an employer identification number will normally be identified as a U.S. person. Regulations to be issued at a later time may make it important for a person to be identified correctly in the IRS records as a U.S. or a foreign person. Accordingly, these proposed regulations provide that the foreign person with a social security number or an employer identification number may establish foreign status with the IRS. Any foreign person that holds an employer identification number issued prior to the effective date of this proposed regulation may continue to use its employer identification number for tax purposes. However, when requested by the IRS, such persons must apply for a new employer identification number that is exclusively dedicated to foreign persons. Proposed § 301.6109–1(g)(1) also provides that an IRS individual taxpayer identification number is considered by the IRS to belong to a nonresident alien individual if the foreign status of the individual is established upon initial application for the number. If foreign status is not

established, the IRS will generally require the individual to apply for a social security number. In rare cases when a resident alien individual is not eligible for a social security number, the taxpayer will be entitled to use an IRS individual taxpayer identification number, and the IRS will note in its records that the number belongs to a U.S. person.

No re-filings are required in order to maintain foreign status described in proposed § 301.6109–1(g)(1). However, proposed § 301.6109–1(g)(2) provides that if circumstances change (for example, a taxpayer becomes a U.S. resident), then the taxpayer must notify the IRS to record the change of status. The IRS will issue guidance on procedures for notifying the IRS of a person's status or changes thereof.

Proposed § 301.6109–1(g)(3) concerns disclosure provisions. In order to make the acceptance agent's procedures possible, it is necessary that taxpayers requesting a TIN through an acceptance agent authorize the disclosure of taxpayer information to the extent necessary to allow communications between the IRS and the acceptance agent in the course of the issuance and administration of the number. Accordingly, the application form will include a waiver of the prohibition against disclosure of taxpayer information in order to permit the IRS to communicate with an acceptance agent regarding matters related to the assignment of a TIN.

Proposed Effective Date

These regulations would apply to returns, statements, or documents filed after December 31, 1995, except the provision relating to the requirement for an estate to obtain an employer identification number applies on and after January 1, 1984. Thus, these regulations would apply to foreign persons described in proposed § 301.6109–1(b)(2)(iv) who file a return of tax after December 31, 1995.

Special Analyses

It has been determined that this notice of proposed rulemaking is not a significant regulatory action as defined in EO 12866. Therefore, a regulatory assessment is not required. It also has been determined that section 553(b) of the Administrative Procedure Act (5 U.S.C. chapter 5) and the Regulatory Flexibility Act (5 U.S.C. chapter 6) do not apply to these regulations, and, therefore, a Regulatory Flexibility Analysis is not required. Pursuant to section 7805(f) of the Internal Revenue Code, this notice of proposed rulemaking will be submitted to the Chief Counsel for Advocacy of the Small Business Administration for comment on its impact on small business.

Comments and Public Hearing

Before these proposed regulations are adopted as final regulations, consideration will be given to any written comments that are submitted timely (preferably a signed original and eight (8) copies) to the IRS. All comments will be available for public inspection and copying.

A public hearing has been scheduled for 10 a.m. on September 28, 1995. Because of access restrictions, visitors will not be admitted beyond the Internal Revenue Building lobby more than 15 minutes before the hearing starts.

The rules of 26 CFR 601.601(a)(3) apply to the hearing.

Persons that wish to present oral comments at the hearing must submit written comments and an outline of the topics to be discussed and the time to be devoted to each topic by September 7, 1995.

A period of 10 minutes will be allotted to each person for making comments.

An agenda showing the scheduling of the speakers will be prepared after the deadline for receiving outlines has passed. Copies of the agenda will be available free of charge at the hearing.

Drafting Information

The principal author of these proposed regulations is Lilo A. Hester of the Office of Associate Chief Counsel (International), within the Office of Chief Counsel, IRS. However, other personnel from the IRS and Treasury Department participated in their development.

Withdrawal of Proposed Regulations

The previously proposed regulations under § 301.6109–1, as published in the **Federal Register** on September 27, 1990, at 55 FR 39486, are hereby withdrawn.

List of Subjects in 26 CFR Part 301

Employment taxes, Estate taxes, Excise taxes, Gift taxes, Income taxes, Penalties, Reporting and recordkeeping requirements.

Proposed Amendments to the Regulations

Accordingly, 26 CFR part 301 is proposed to be amended as follows:

PART 301—PROCEDURE AND ADMINISTRATION

Paragraph 1. The authority citation for part 301 is amended by adding an entry in numerical order to read in part as follows:

Authority: 26 U.S.C. 7805 * * *

Section 301.6109–1 also issued under 26 U.S.C. 6109(a), (c), and (d). * * *

Par. 2. Section § 301.6109–1 is amended as follows:

1. Paragraphs (a)(1), (b), (c), and (d)(2) are revised.
2. Paragraphs (d)(3) and (4) are added.
3. Paragraphs (f), (g), and (h) are revised.

The revisions and additions read as follows:

§ 301.6109–1 Identifying numbers.

(a) *In general*—(1) *Taxpayer identifying numbers*—(i) *Types.* There are generally three types of taxpayer identifying numbers: social security numbers, Internal Revenue Service (IRS) individual taxpayer identification numbers, and employer identification numbers. Social security numbers take the form 000–00–0000, IRS individual taxpayer identification numbers take the form 000–00–0000 but begin with a specific number designated by the IRS, and employer identification numbers take the form 00–0000000. Both social security numbers and IRS individual taxpayer identification numbers identify individual persons. For the definition of social security number and employer identification number, see §§ 301.7701–11 and 301.7701–12, respectively. For the definition of IRS individual taxpayer identification number, see paragraph (d)(3) of this section.

(ii) *Uses.* Except as otherwise provided in applicable regulations under this title or on a return, statement, or other document, and related instructions, taxpayer identifying numbers must be used as follows:

(A) Except as otherwise provided in paragraphs (a)(1)(ii)(B) and (D) of this section, an individual required to furnish a taxpayer identifying number must use a social security number.

(B) Except as otherwise provided in paragraph (a)(1)(ii)(D) of this section, an individual required to furnish a taxpayer identifying number but who is not eligible to obtain a social security number, must use an IRS individual taxpayer identification number.

(C) Any person other than an individual (such as corporations, partnerships, nonprofit associations, trusts, estates, and similar nonindividual persons) that is required to furnish a taxpayer identifying number must use an employer identification number.

(D) An individual, whether U.S. or foreign, who is an employer or who is engaged in trade or business as a sole proprietor should use an employer identification number as required by

returns, statements, or other documents and their related instructions.

* * * * *

(b) *Requirement to furnish one's own number*—(1) *U.S. persons.* Every U.S. person who makes under this title a return, statement, or other document must furnish its own taxpayer identifying number as required by the forms and the accompanying instructions. A U.S. person whose number must be included on a document filed by another person must give the taxpayer identifying number so required to the other person on request. For penalties for failure to supply taxpayer identifying numbers, see sections 6721 through 6724. For provisions dealing specifically with the duty of employees with respect to their social security numbers, see § 31.6011(b)–2 (a) and (b) of this chapter (Employment Tax Regulations). For provisions dealing specifically with the duty of employers with respect to employer identification numbers, see § 31.6011(b)–1 of this chapter (Employment Tax Regulations).

(2) *Foreign persons.* The provisions of paragraph (b)(1) of this section regarding the furnishing of one's own number shall apply to the following foreign persons—

(i) A foreign person that has income effectively connected with the conduct of a U.S. trade or business at any time during the taxable year;

(ii) A foreign person that has a U.S. office or place of business or a U.S. fiscal or paying agent at any time during the taxable year;

(iii) A nonresident alien treated as a resident under section 6013(g) or (h); and

(iv) Any other foreign person who makes a return of tax under this title (including income, estate, and gift tax returns) but excluding information returns, statements, or documents.

(c) *Requirement to furnish another's number.* Every person required under this title to make a return, statement, or other document must furnish such taxpayer identifying numbers of other U.S. persons and foreign persons that are described in paragraph

(b)(2) (i), (ii), or (iii) of this section as required by the forms and the accompanying instructions. If the person making the return, statement, or other document does not know the taxpayer identifying number of the other person, such person must request the other person's number. A request should state that the identifying number is required to be furnished under authority of law. When the person making the return, statement, or other document does not know the number of the other person, and has complied with the request provision of this paragraph, such person must sign an affidavit on the transmittal document forwarding such returns, statements, or other documents to the Internal Revenue Service, so stating. A person required to file a taxpayer identifying number shall correct any errors in such filing when such person's attention has been drawn to them.

(d) * * *

(2) *Employer identification number.* Any person required to furnish an employer identification number must apply for one, if not done so previously, on Form SS–4. A Form SS–4 may be obtained from any office of the Internal Revenue Service, U.S. consular office abroad, or from an acceptance agent described in paragraph (d)(3)(iv) of this section. The person must make such application in advance of the first required use of the employer identification number to permit issuance of the number in time for compliance with such requirement. The form, together with any supplementary statement, must be prepared and filed in accordance with the form, accompanying instructions, and relevant regulations, and must set forth fully and clearly the requested data.

(3) *IRS individual taxpayer identification number*—(i) *Definition.* The term *IRS individual taxpayer identification number* means a taxpayer identifying number issued to an alien individual by the Internal Revenue Service, upon application, for use in connection with filing requirements under this title. The term *IRS individual taxpayer identification number* does not refer to a social security number or an account number for use in employment for wages. For purposes of this section, the term *alien individual* means an individual who is not a citizen or national of the United States.

(ii) *General rule for obtaining number.* Any individual who is not eligible to obtain a social security number and is required to furnish a taxpayer identifying number must apply for an IRS individual taxpayer identification number on Form W–7, Application for IRS Individual Taxpayer Identification Number, or such other form as may be prescribed by the Internal Revenue Service. Form W–7 may be obtained from any office of the Internal Revenue Service, U.S. consular office abroad, or any acceptance agent described in paragraph (d)(3)(iv) of this section. The individual shall furnish the information required by the form and accompanying instructions, including the individual's name, address, foreign tax identification number (if any), and specific reason for obtaining an IRS individual taxpayer identification number. The individual must make such application in advance of the first required use of the IRS individual taxpayer identification number to permit issuance of the number in time for compliance with such requirement. The application form, together with any supplementary statement and documentation, must be prepared and filed in accordance with the form, accompanying instructions, and relevant regulations, and must set forth fully and clearly the requested data.

(iii) *General rule for assigning number.* Under procedures issued by the Internal Revenue Service, an IRS individual taxpayer identification number will be assigned to an individual upon the basis of information reported on Form W–7 (or such other form as may be prescribed by the Internal Revenue Service) and any such accompanying documentation that may be required by the Internal Revenue Service. An applicant for an IRS individual taxpayer identification number must submit such documentary evidence as the Internal Revenue Service may prescribe in order to establish alien status and identity. Examples of acceptable documentary evidence for this purpose may include items such as an original (or a certified copy of the original) passport, driver's license, birth certificate, identity card, or U.S. visa.

(iv) *Acceptance agents*—(A) *Agreements with acceptance agents.* A person described in paragraph (d)(3)(iv)(B) of this section will be accepted by the Internal Revenue Service to act as an acceptance agent for purposes of the regulations under this section upon entering into an agreement with the Internal Revenue Service, under which the acceptance agent will be authorized to act on behalf of taxpayers seeking to obtain a taxpayer identifying number from the Internal Revenue Service. The agreement must contain such terms and conditions as are necessary to insure proper administration of the process by which the Internal Revenue Service issues taxpayer identifying numbers to foreign persons, including proof of their identity and foreign status. In particular, the agreement may contain—

(*1*) Procedures for providing Form SS–4 and Form W–7, or such other necessary form to applicants for obtaining a taxpayer identifying number;

(*2*) Procedures for providing assistance to applicants in completing

the application form or completing it for them;

(*3*) Procedures for collecting, reviewing, and maintaining, in the normal course of business, a record of the required documentation for assignment of a taxpayer identifying number;

(*4*) Procedures for submitting the application form and required documentation to the Internal Revenue Service, or if permitted under the agreement, submitting the application form together with a certification that the acceptance agent has reviewed the required documentation and that it has no actual knowledge or reason to know that the documentation is not complete or accurate;

(*5*) Procedures for assisting taxpayers with notification procedures described in paragraph (g)(2) of this section in the event of change of foreign status;

(*6*) Procedures for making all documentation or other records furnished by persons applying for a taxpayer identifying number promptly available for review by the Internal Revenue Service, upon request; and

(*7*) Provisions that the agreement may be terminated in the event of a material failure to comply with the agreement, including failure to exercise due diligence under the agreement.

(B) *Persons who may be acceptance agents.* An acceptance agent may include any financial institution as defined in section 265(b)(5) or § 1.165–12(c)(1)(v) of this chapter, any college or university that is an educational organization as defined in § 1.501(c)(3)–1(d)(3)(i) of this chapter, any federal agency as defined in section 6402(f) or any other person or categories of persons that may be authorized by regulations or Internal Revenue Service procedures. A person described in this paragraph (d)(3)(iv)(B) that seeks to qualify as an acceptance agent must have an employer identification number for use in any communication with the Internal Revenue Service. In addition, it must establish to the satisfaction of the Internal Revenue Service that it has adequate resources and procedures in place to comply with the terms of the agreement described in paragraph (d)(3)(iv)(A) of this section.

(4) *Coordination of taxpayer identifying numbers*—(i) *Social security number.* Any individual who is duly assigned a social security number or who is entitled to a social security number will not be issued an IRS individual taxpayer identification number. The individual can use the social security number for all tax purposes under this title, even though the individual is, or later becomes, a nonresident alien individual. Further, any individual who has an application pending with the Social Security Administration will be issued an IRS individual taxpayer identification number only after the Social Security Administration has notified the individual that a social security number cannot be issued. Any alien individual duly issued an IRS individual taxpayer identification number who later becomes a U.S. citizen, or an alien lawfully permitted to enter the United States either for permanent residence or under authority of law permitting U.S. employment, will be required to obtain a social security number. Any individual who has an IRS individual taxpayer identification number and a social security number, due to the circumstances described in the preceding sentence, must notify the Internal Revenue Service of the acquisition of the social security number and must use the newly-issued social security number as the taxpayer identifying number on all future returns, statements, or other documents filed under this title.

(ii) *Employer identification number.* Any individual with both a social security number (or an IRS individual taxpayer identification number) and an employer identification number may use the social security number (or the IRS individual taxpayer identification number) for individual taxes, and the employer identification number for business taxes as required by returns, statements, and other documents and their related instructions. Any alien individual duly assigned an IRS individual taxpayer identification number who also is required to obtain an employer identification number must furnish the previously-assigned IRS individual taxpayer identification number to the Internal Revenue Service on Form SS–4 at the time of application for the employer identification number. Similarly, where an alien individual has an employer tax identification number and is required to obtain an IRS individual taxpayer identification number, the individual must furnish the previously-assigned employer identification number to the Internal Revenue Service on Form W–7, or such other form as may be prescribed by the Internal Revenue Service, at the time of application for the IRS individual taxpayer identification number.

* * * * *

(f) *Penalty.* For penalties for failure to supply taxpayer identifying numbers, see sections 6721 through 6724.

(g) *Special rules for taxpayer identifying numbers issued to foreign persons*—(1) *General rule*—(i) *Social security number.* A social security number is generally identified in the records and database of the Internal Revenue Service as a number belonging to a U.S. citizen or resident alien individual. A person may establish a different status for the number by providing proof of foreign status with the Internal Revenue Service under such procedures as the Internal Revenue Service shall prescribe, including the use of a form as the Internal Revenue Service may specify. Upon accepting an individual as a nonresident alien individual, the Internal Revenue Service will assign this status to the individual's social security number.

(ii) *Employer identification number.* An employer identification number is generally identified in the records and database of the Internal Revenue Service as a number belonging to a U.S. person. However, the Internal Revenue Service may establish a separate class of employer identification numbers solely dedicated to foreign persons which will be identified as such in the records and database of the Internal Revenue Service. A person may establish a different status for the number either at the time of application or subsequently by providing proof of U.S. or foreign status with the Internal Revenue Service under such procedures as the Internal Revenue Service shall prescribe, including the use of a form as the Internal Revenue Service may specify. The Internal Revenue Service may require a person to apply for the type of employer identification number that reflects the status of that person as a U.S. or foreign person.

(iii) *IRS individual taxpayer identification number.* An IRS individual taxpayer identification number is generally identified in the records and database of the Internal Revenue Service as a number belonging to a nonresident alien individual. If the Internal Revenue Service determines at the time of application or subsequently, that an individual is not a nonresident alien individual, the Internal Revenue Service may require that the individual apply for a social security number. If a social security number is not available, the Internal Revenue Service may accept that the individual use an IRS individual taxpayer identification number, which the Internal Revenue Service will identify as a number belonging to a U.S. resident alien.

(2) *Change of foreign status.* Once a taxpayer identifying number is identified in the records and database of the Internal Revenue Service as a number belonging to a U.S. or foreign person, the status of the number is

permanent until the circumstances of the taxpayer change. A taxpayer whose status changes (for example, a nonresident alien individual with a social security number becomes a U.S. resident alien) must notify the Internal Revenue Service of the change of status under such procedures as the Internal Revenue Service shall prescribe, including the use of a form as the Internal Revenue Service may specify.

(3) *Waiver of prohibition to disclose taxpayer information when acceptance agent acts.* As part of its request for an IRS individual taxpayer identification number or submission of proof of foreign status with respect to any taxpayer identifying number, where the foreign person acts through an acceptance agent, the foreign person will agree to waive the limitations in section 6103 regarding the disclosure of certain taxpayer information. However, the waiver will apply only for purposes of permitting the Internal Revenue Service and the acceptance agent to communicate with each other regarding matters related to the assignment of a taxpayer identifying number and change of foreign status.

(h) *Effective date.* The provisions of this section generally are effective for any return, statement, or other document to be filed after December 31, 1995. However, the provision of paragraph (a)(1)(ii) of this section that requires an estate to obtain an employer identification number applies on and after January 1, 1984.

Margaret Milner Richardson,

Commissioner of Internal Revenue.

[FR Doc. 95–13818 Filed 6–7–95; 8:45 am]

BILLING CODE 4830–01–U

ENVIRONMENTAL PROTECTION AGENCY

40 CFR Part 52

[UT24–1–7036b; FRL–5218–5]

Determination of Attainment of Ozone Standard for Salt Lake and Davis Counties, Utah, and Determination Regarding Applicability of Certain Reasonable Further Progress and Attainment Demonstration Requirements

AGENCY: Environmental Protection Agency (EPA).

ACTION: Proposed rule.

SUMMARY: The EPA proposes to determine that the Salt Lake and Davis Counties ozone nonattainment area has attained the National Ambient Air Quality Standard (NAAQS) for ozone and that certain reasonable further progress and attainment demonstration requirements, along with certain other related requirements, of Part D of Title 1 of the Clean Air Act are not applicable to the area for so long as the area continues to attain the ozone NAAQS. In the Final Rules section of this **Federal Register**, EPA is making these determinations without prior proposal. A detailed rationale for the action is set forth in the direct final rule. If no adverse comments are received in response to that direct final rule, no further activity is contemplated in relation to this proposed rule. If EPA receives adverse comments, EPA will withdraw the direct final rule and address the comments in a subsequent final rule based on this proposed rule. EPA will not institute a second comment period on this notice. Any parties interested in commenting on this notice should do so at this time.

DATES: Comments on this action must be received by July 10, 1995.

ADDRESSES: Written comments should be addressed to: Douglas M. Skie, Chief, Air Programs Branch (8ART-AP), United States Environmental Protection Agency, Region 8, 999 18th Street, Suite 500, Denver, Colorado 80202–2466.

A copy of the air quality data and EPA's analysis are available for inspection at the following address: United States Environmental Protection Agency, Region 8, Air Programs Branch, 999 18th Street, Suite 500, Denver, Colorado 80202–2466.

FOR FURTHER INFORMATION CONTACT: Tim Russ, Air Programs Branch (8ART-AP), United States Environmental Protection Agency, Region 8, 999 18th Street, Suite 500, Denver, Colorado 80202–2466 Phone: (303) 293–1814

SUPPLEMENTARY INFORMATION: For additional information, see the direct final rule published in the Final Rules section of this **Federal Register**.

Dated: May 31, 1995.

William P. Yellowtail,

Regional Administrator.

[FR Doc. 95–14066 Filed 6–7–95; 8:45 am]

BILLING CODE 6560–50–P

40 CFR Part 455

[FRL–5214–7]

RIN 2040–AC21

Pesticide Chemicals Category, Formulating, Packaging and Repackaging Effluent Limitations Guidelines, Pretreatment Standards, and New Source Performance Standards; Supplemental Notice

AGENCY: Environmental Protection Agency.

ACTION: Supplemental notice to proposed rule.

SUMMARY: EPA is publishing this Supplemental Notice to obtain public comment on two topics for which comments were received on the proposed rulemaking (59 FR 17850, April 14, 1994) for the Pesticides Formulating, Packaging and Repackaging (PFPR) Industry. EPA seeks comment on the scope and applicability of the rulemaking as they pertain to commenters' requests for the exemption of certain pesticide active ingredients (PAIs) and certain wastewater discharges from the rulemaking.

In addition, EPA is soliciting comment on a regulatory option under consideration by the Agency that is comprised of two alternatives between which industry may choose: (1) Achieving zero discharge or (2) incorporating specific pollution prevention (or best management) practices and treatment technologies and achieving an allowable discharge of small quantities of pollutants.

EPA's addition of the pollution prevention alternative to achieving zero discharge provides benefits to the environment by reducing the cross-media impacts that would otherwise occur from hauling and incinerating the non-reusable portion of PFPR wastewaters. The provision of an alternative compliance method also provides flexibility to industry in meeting the effluent limitations guidelines and standards. Reducing the scope of the rule will reduce regulatory burden without compromising environmental protection. This notice also solicits comment on various means of implementing a pollution prevention alternative to zero discharge.

EPA has estimated the compliance costs and economic impacts expected to result from a rule comprised of a zero discharge and a pollution prevention alternative (referred to as the Zero/P2 Option) as specified in this notice. The Agency has determined that the Zero/P2 Option will result in a similar removal of toxic pound equivalents per year

(approximately 30 million toxic pound equivalents) as the proposed zero discharge option alone. At the same time, the Zero/P2 Option is expected to result in a reduced annualized cost ($32.7 million in $1988 or $39.4 million in $1995) and fewer facility closures (no facility closures) and line closures (162) than would result from the zero discharge option in the proposed rule. EPA has determined that the Zero/P2 Option is economically achievable.

DATES: Comments on the proposed rule must be received in writing by July 10, 1995 at the following address.

ADDRESSES: Send comments in writing to Ms. Shari H. Zuskin, Engineering & Analysis Division (4303), U.S. EPA, 401 M Street SW., Washington, DC 20460.

The complete record for this rulemaking is available for review at EPA's Water Docket; 401 M Street, SW., Washington, DC 20460. For access to Docket materials, call (202) 260–3027 between 9 a.m. and 3:30 p.m. for an appointment. The EPA public information regulation (40 CFR part 2) provides that a reasonable fee may be charged for copying.

FOR FURTHER INFORMATION CONTACT: For additional technical information write or call Ms. Zuskin at (202) 260–7130. For additional information on the economic impact analyses contact Dr. Lynne G. Tudor at the above address or by calling (202) 260–5834.

SUPPLEMENTARY INFORMATION:

I. Background
II. Changes to Scope
A. Sanitizers
B. Pool Chemicals
C. Other Pesticide Active Ingredients
1. Microorganisms
2. Mixtures
3. PAIs That Have Been Determined Not To Pass Through
D. Wastewater Sources
E. Clarification of Definitions
III. Pollution Prevention Alternative
A. Authority
B. Background
C. Structure of the Alternative
1. Alternative to Zero
2. Definition of Pollution Prevention Allowable Discharge
3. Description of Specified Practices
4. Implementation of the Pollution Prevention Alternative
IV. Costing Methodology
V. Estimated Costs, Economic Impacts, and Cost-Effectiveness
VI. Unfunded Mandates Reform Act
VII. Solicitation of Comment
Appendix A—PAIs Considered for Exemption
Appendix B—Sample Regulatory Text Considered for the Final Rule
Appendix C—List of PAI Specific Treatment Technologies
Appendix D—List of Acronyms

I. Background

In a Notice of Proposed Rulemaking on April 14, 1994 (59 FR 17850), EPA proposed effluent limitations guidelines and standards for the control of wastewater pollutants from the Pesticide Formulating, Packaging and Repackaging (PFPR) industry. This proposed rulemaking would have established a zero discharge limitation of wastewater pollutants for almost all of the formulating, packaging and repackaging of FIFRA registered pesticide active ingredients. Only a small number of PAIs were not completely covered by the proposed zero discharge.

As result of disproportionate economic impacts, EPA proposed a partial exemption for the exterior wastewaters [1] from small sanitizer facilities. Small sanitizer facilities were defined as those facilities which formulate, package or repackage 265,000 lbs/yr or less of all FIFRA registered products containing one or more sanitizer active ingredients (listed in Table 8 of the regulation) and no other active ingredients at a single pesticide producing establishment (i.e., a single PFPR facility). The production cutoff of 265,000 lbs/yr represents the production level (of these sanitizer products) at the largest facility that would experience economic impacts if there was no exemption of wastewater treatment requirements for non-interior wastewater sources. (See Section II.A. of this notice for a description of revisions made to this exemption).

EPA based the zero discharge limitation on pollution prevention, recycle/reuse and, when necessary, treatment through the Universal Treatment System (UTS) for reuse. EPA visualized the UTS as a flexible system consisting of a variety of treatment technologies that have been determined to be effective for treating PFPR wastewaters. In calculating compliance costs, EPA included costs for treatment technologies such as emulsion breaking, hydrolysis, chemical oxidation, metals precipitation and carbon adsorption. EPA also included costs for contract hauling treatment residuals (sludges) from the UTS for incineration. Because of the estimates of reduced wastewater volumes based on the increase in reuse/recycle practices, the overall volume of wastewaters being contract hauled off-site for incineration was not expected to increase. Thus, EPA did not include additional costs for contract hauling of PFPR wastewaters in the original proposal. Based on comments, revised costs for the proposed zero discharge option have been included in this notice.

The public comment on the proposed rule was originally 60 days and was extended for 30 additional days. EPA received 93 individual comment letters, including those requesting an extension of the comment period. The subject of the comments spanned a variety of topics, including changes to scope of the regulation, EPA's pesticide cross-contamination policy and its effect on the industry's ability to meet zero discharge, increased cross-media impacts due to contract hauling of wastewater for incineration to meet zero discharge, and requests for a discharge allowance when following specific pollution prevention practices.

II. Changes to Scope

A large portion of the comment letters addressed issues concerning the scope and applicability of the proposed regulation. Many commenters requested that the partial exemption of the listed sanitizer active ingredients be expanded to be a total exemption from the regulation for all antimicrobial active ingredients. Others requested that the exemption for sodium hypochlorite (bleach) be extended to other ''pool chemicals.'' Commenters also requested that EPA exempt from the regulation certain low risk PAIs, such as cloves and citronella; specific wastewater sources such as aerosol leak test water, safety equipment cleaning water, laboratory equipment rinse water and storm water; and experimental/ research facilities. In response to the information and data supplied by commenters, EPA is considering whether to revise some aspects of the scope of the proposed PFPR effluent guidelines. EPA is using today's notice to solicit comment on these issues.

If the Agency determines to exclude any of the pollutants discussed in this section of the notice from the scope of the rule, PFPR facilities that discharge such pollutants directly into navigable waters (i.e., direct discharge PFPR/ Manufacturers) will still need to comply with the general NPDES permitting requirements, including the possible establishment by the permitting authority of case-by-case effluent limitations based upon Best Professional Judgement (BPJ) under CWA section 402(a)(1)(B). (See 40 CFR 125.3). In addition, those PFPR facilities that indirectly discharge such excluded PAI pollutants to navigable waters through a

[1] At the time of proposal, exterior wastewaters included: exterior equipment cleaning water, floor wash, leak and spill cleanup water, safety equipment cleaning water, DOT aerosol test bath water, air pollution control scrubber water, laboratory rinsate and contaminated precipitation runoff.

POTW would remain subject to the Pass Through and Interference prohibitions contained in the general pretreatment regulations (40 CFR 403.5(a)(1)). PFPR facilities that are indirect dischargers of the excluded PAIs could also be subject to local limits established by the POTW receiving the facility's wastewater (40 CFR 403.5(d)).

A. Sanitizers

A large number of the comments received by EPA were requests for an exemption for antimicrobial products from the scope of the regulation. Although EPA did propose to partially exempt a list of sanitizer active ingredients due to economic reasons (i.e., disproportionate economic impacts), commenters requested expansion of this list. In today's notice EPA is soliciting comment on the exemption of indoor/home use and similar institutional sanitizer products from the regulation in addition to those sanitizer active ingredients initially listed in Table 8 of the proposed regulation (See Appendix A to this notice). The exemption would apply to both interior and exterior wastewater sources and would no longer be limited by a maximum production level because it is no longer solely based on disproportionate impacts (see discussion on production cutoff in Section I). However, EPA is not planning to exempt sporicidals or industrial preservatives. EPA has also included, in Appendix A, a list of those PAIs that are considered, under FIFRA, to be inert ingredients when used with antimicrobial active ingredients.

In addition to economic impacts, EPA believes that there are a number of other factors to be considered in broadening the scope of the proposed sanitizer exemption. First, these indoor home use sanitizer products are formulated for the purposes of their labeled use to ''go down the drain'' (i.e., toilet bowl cleaners and tub and tile cleaners). All labels for registered products, including the use and disposal statements, are reviewed by EPA. Second, these same chemicals go to Publicly Owned Treatment Works (POTWs), possibly in higher concentrations and volumes, from their approved labeled use in homes than from equipment cleaning at PFPR facilities. Third, EPA has not been able to identify any reported upsets to POTWs caused by these sanitizer active ingredients. EPA did receive biodegradation data for some of these sanitizer active ingredients which supports a hypothesis that these PAIs also do not pass through POTWs. Finally, these sanitizer active ingredients represent a large portion of the low toxicity PAIs considered for regulation at the time of proposal.

For the purpose of exempting indoor/home use (and similar institutional) sanitizers, EPA would make use of the following definition in the final regulation:

> Sanitizer Products means pesticide products that (1) contain the sanitizer active ingredients listed in Table 8 of the regulation and no other active ingredient; or (2) pesticide products that are intended to disinfect or sanitize, reducing or mitigating growth or development of microbiological organisms including bacteria, fungi or viruses on surfaces or inanimate objects in the household and or institutional environment, as provided in the directions for use on the product label. The only institutional antimicrobial products which are included by this definition are those with formulations similar to the household sanitizer products.

For the purposes of identifying the PAIs which EPA is considering exempting from the scope of this rule and in order to estimate compliance costs to the industry for this notice, EPA was able to use the 1988–1991 FATES (FIFRA and TSCA Enforcement System) database which was previously used in developing costs for the proposal. In addition to the database, EPA used the definition shown above to construct the expanded list of sanitizer active ingredients that would receive an exemption from the final regulation. The expanded list of exempted sanitizer active ingredients used to develop revised compliance costs is contained in Appendix A, Table 1 of this notice. The discussion of estimating the revised compliance costs is contained in Section IV of this notice. EPA solicits comment on both the definition and its use, and whether to use the definition in conjunction with a list or to use a list only.

B. Pool Chemicals

In the proposed regulation EPA exempted sodium hypochlorite (bleach) from the pretreatment standards. EPA solicited comment on additional chemicals that should also be excluded along with sodium hypochlorite. Commenters suggested that several other chemicals, that are mainly used in the swimming pool industry, including calcium hypochlorite, potassium hypochlorite, lithium hypochlorite, chlorinated isocyanurate compounds and several halogenated hydantoins should be included in this exemption.

EPA did not include these ''pool chemicals'' in the exemption, at the time of proposal, because EPA believed that the formulating, packaging and repackaging of these chemicals did not involve the use of water (e.g., dry production). After review of the comments and a site visit to a ''pool chemicals'' facility, EPA understands that although the products are dry, the addition of water is necessary in certain instances.

Throughout the course of normal dry operations, small amounts of product fall on the floor or accumulate on equipment surfaces and become contaminated with ordinary dust and dirt. These chemicals act as strong oxidizing agents and left untreated, the sweepings pose a serious fire and safety hazard. Facilities treat (de-activate) these chemicals with the addition of water and neutralizing chemicals such as sodium hydroxide or sodium carbonate. With this treatment, the available chlorine in the water is converted to a pH neutral salt which can be discharged to the POTW.

Commenters also provided additional reasons for the sodium hypochlorite exemption, stating that the chemical does not survive in the sanitary waste stream and would be converted to sodium chloride long before it reaches the POTW. Commenters supplied data on the degradation of sodium hypochlorite in water. This data is available for review in the public record for this notice. In addition, EPA notes that calcium hypochlorite, potassium hypochlorite and lithium hypochlorite exhibit similar chemistry and half-lives as sodium hypochlorite. EPA also received comment requesting the extension of the exemption to sodium carbonate, phosphoric acid and hydrochloric acid. Phosphoric acid and hydrochloric acid fall under the original sanitizer exemption and sodium carbonate is considered an inert ingredient when used in formulations with other sanitizer chemicals; therefore, EPA does not believe it is necessary to list these chemicals under the pool chemicals exemption. EPA is considering whether to exempt the chemicals on Table 2 in Appendix A from these categorical pretreatment standards (PSES and PSNS) in the final regulation. In addition, EPA is considering using a definition for pool chemicals in conjunction with the list in Appendix A. This would provide more flexibility to newly registered chemicals that are deserving of the pool chemicals exemption to receive it in the future. EPA solicits comment on a definition for this group of chemicals.

C. Other PAIs

Based on comments received, EPA performed a more extensive investigation to develop options for appropriate treatment technologies for certain PAIs. Upon completing this

more recent evaluation, EPA was left with two groups of PAIs for which insufficient information was available to identify best available control technologies. The two groups are identified as microorganisms and mixtures and are discussed below. In addition, comments were received requesting the exemption of specific low risk pesticides that fall into the ''mixtures'' grouping.

1. Microorganisms

EPA is considering whether to exclude microorganisms that are registered for pesticidal use, such as Bacillus thuringiensis, from these regulations. Although, EPA has little information on the formulation, packaging and repackaging of such pesticides or the generation and characteristics of wastewaters from such operations, EPA believes these ''pesticides'' are not formulated in a similar fashion as other PAIs covered by the proposed rule. Microorganisms which have registered pesticidal uses are generally created through a fermentation process, similar to those found in some food processing plants. Fermentation is a biological process, where as other pesticides are manufactured and formulated through chemical and physical processes.

In addition, almost all the microorganisms registered as pesticide products are exempt from the requirement of obtaining a (residue) tolerance for pesticide chemicals in or on raw agricultural commodities (40 CFR 180.1001). Under Part 180 Subpart D - Exemptions From Tolerance- it states that ''an exemption from a tolerance shall be granted when it appears that the total quantity of the pesticide chemical in or on all raw agricultural commodities for which it is useful under conditions of use currently prevailing or proposed will involve no hazard to the public health.'' Also, some of these microorganisms will not survive in aquatic environments, and therefore, pose no harm to aquatic life. These microorganisms are listed in Appendix A of this notice. EPA solicits comment on the exemption of these pesticides from the PFPR regulation.

2. Mixtures

EPA had difficulty in finding information on appropriate treatment technology options for a second group of PAIs, which will be referred to as ''mixtures.'' This group of mixtures represents those PAIs that are made up of a number of substances. The molecular weights, solubilities and aromaticity of these pesticides are not easily defined because they are comprised of a variety of compounds. For example, oil of eucalyptus contains cineole, alpha-pinene, phellandrene, terpineol, citronellal, geranyl acetate, eudesmol, eudesmil acetate, piperitone and volatile aldehydes.

This group of mixtures can be separated into two subgroups. The first subgroup of mixtures was the subject of several comments requesting exemption for these PAIs from the proposed rule. This first subgroup contains active ingredients that are plants, extracts from plants, non-toxic household items, foods or constituents of foods. In addition, many of these pesticides have been determined to be Generally Regarded As Safe (GRAS) under Food and Drug Administration (FDA) regulation (20 CFR 170.1). Examples of these pesticides include: oil of anise, rosemary herbs, thyme herbs, cloves, oil of citronella, lanolin, cottonseed oil, soybean oil, oil of lemongrass, cedarwood oil, soap and sawdust. EPA is considering whether to exclude this subgroup of mixtures from the PFPR effluent guidelines regulation. The list of these mixtures can be found in Appendix A of this notice. EPA solicits comment on the exclusion of these pesticides and requests information on additional pesticides which should be included in this group of mixtures.

The other subgroup of mixtures is not as easily defined. This subgroup also contains mixtures of a number of substances of varying nature whose identifying characteristics are not easily identified. EPA has not been able to identify treatability data for these pesticides in the available literature. Many of these mixtures, such as kerosene, petroleum distillate oils, xylene range aromatic solvent and heavy aromatic naphtha, are typically found in the organic chemicals industry or are used as inert ingredients in the PFPR industry; however, in some instances they have been registered for pesticidal uses. EPA does not believe there is sufficient data to exclude these PAIs from this regulation; therefore, EPA is considering whether to reserve regulation of these types of pesticides and evaluate them at a later time. Specific identification of this subgroup of mixtures is contained in Appendix A of this notice.

3. PAIs That Have Been Determined Not to Pass Through

As discussed in the preamble to the proposed regulation, under the pesticide manufacturing effluent limitations guidelines and pretreatment standards, EPA found that four organic chemicals considered to be priority pollutants did not pass through POTWs (59 FR 17872). The four chemicals are phenol, 2-chlorophenol, 2,4-dichlorophenol and 2,4-dimethylphenol (58 FR 50649; September 28, 1993). In addition to being a priority pollutant, phenol is considered a PAI under the proposed PFPR effluent guidelines.

EPA did not propose to exempt these four chemicals from the PFPR effluent limitations and categorical pretreatment standards. EPA proposed to establish a categorical pretreatment standard of zero discharge. EPA based this zero discharge standard upon the technology of recycling, reuse, treatment, and/or off-site disposal, which would be most likely shown by ''no flow'' of a PFPR facility's entire process wastewater stream. EPA found that PFPR facilities do not typically isolate their process wastewater streams; therefore the four ''no pass through'' pollutants would not be discharged in a separate wastewater stream. The zero discharge standard (premised upon a no flow technology) applied equally to all PAIs and priority pollutants, resulting in the removal of pass through pollutants and the incidental removal of those four pollutants that do not pass through. Thus, the Agency determined that it was unnecessary to exempt any PAI or priority pollutant from the pretreatment standards on the basis that it does not pass through a POTW. (59 FR 17872).

However, EPA is considering whether to add a pollution prevention alternative (see Section III) to the regulation which would provide for an allowable level of discharge where facilities are performing specified pollution prevention practices. With this proposed alternative, EPA believes it would be appropriate to exclude phenol, 2-chlorophenol, 2,4-dichlorophenol and 2,4-dimethylphenol from regulation in these categorical pretreatment standards (PSES and PSNS) for this alternative because they have been found not to pass through and facilities would no longer have to achieve no flow of process wastewater. EPA solicits comments on this determination.

D. Wastewater Sources

Commenters requested exemption of Department of Transportation (DOT) aerosol leak test water, safety equipment cleaning water, laboratory rinsates and storm water from the definition of process wastewater. After reviewing the information and data supplied by commenters and performing additional data gathering, EPA believes that, in certain situations, these wastewaters should be exempted from the rule.

DOT aerosol leak test baths are used by PFPR facilities that package their

products into aerosol cans. The leak test is performed as a requirement prior to transporting the cans. Test baths must be kept at 130°F, cans must be fully submerged, and the baths must be visually monitored for leaking or bursting cans.

EPA believes that unless there are leaking or bursting cans, the water in the bath should not contain pollutants from the formulations. When facilities are not using continuous overflow baths, they will change the water periodically. This is usually due to the build up of small amounts of oil and grease from the exterior surface of the cans themselves (or the silk screened labels). EPA is considering whether to exclude discharges from DOT test bath water from the rule when a facility operates a batch bath where no leaks have been detected or where cans have not burst from the time of the last water change out. EPA solicits comment on this exclusion (See Section III for a discussion on non-excluded DOT test bath water and the pollution prevention alternative.)

EPA has also reexamined the inclusion of discharges from safety equipment cleaning water in the rule. Commenters requested the exemption of safety equipment cleaning water from the zero discharge requirement on the basis that it contains only small amounts of pollutants. Commenters also stated that a zero discharge limitation on discharges from safety equipment cleaning waters would create a disincentive for testing safety showers and eye washes and would create worker safety problems. Safety showers and eye washes are typically tested by running water through the equipment long enough to ensure that water is flowing freely to the unit and that associated alarms are functioning. EPA proposed exempting wastewater discharges from the operation of employee showers, laundry facilities and the fire protection equipment test water for similar reasons, including worker safety issues. In addition, the water from testing this safety equipment should not contain any pesticide active ingredients or other pollutants of concern. Therefore, EPA is considering whether to exclude discharges from the testing of safety showers and eye washes from coverage under the final rule. However, other wastewater associated with cleaning safety equipment, such as rinsing respirators or boots, would still be covered by the rule and the pollution prevention alternative (see Section III) as it would be expected to contain some level of pollutants. EPA solicits comment on this exclusion.

Laboratory equipment rinse water is another wastewater source which commenters considered to contain low levels of PAIs. Typically, a finished product is analyzed prior to packaging as part of the facility's quality control program. A small sample, referred to as the retain sample, is taken into the laboratory for testing.

EPA believes that the only measurable amounts of PAI would come from the retain sample itself and the container that is used to bring it into the laboratory. Facilities can usually reuse the retain sample back into a future formulation of the same product. Wastewaters originating from water that is used to rinse other laboratory glassware, such as graduated cylinders, beakers and pipets should contain non-detectible levels of pesticide active ingredients. In addition, while performing analytical testing other chemicals may be used to perform extractions and render the glassware rinsates non-reusable. Therefore, EPA is considering whether to exclude wastewater discharges from cleaning analytical equipment in on-site laboratories from these regulations. However, EPA would not be excluding wastewater from the retain sample itself or the water used to clean the container that is used to bring the sample into the laboratory. EPA solicits comment on this exclusion.

In the proposed regulation, EPA included contaminated precipitation runoff (storm water) that collects in tank farms, secondary containment structures or on loading pads. Commenters requested the exclusion of storm water from the zero discharge regulation because it was not reusable and because storm water is covered by the Storm Water Regulations (57 FR 41297; September 9, 1992).

In the proposed regulation, EPA suggested the use of the Universal Treatment System (UTS) for achieving zero discharge for wastewaters that could not be reused directly into product. EPA suggested that, for example, floor wash could be treated through the UTS and reused as floor wash. Commenters disagreed with this suggestion in terms of storm water, stating that storm water cannot not be reused for its original purpose following treatment.

In addition, comments were received on the redundancy of the proposed effluent guidelines regulations with the storm water regulations (57 FR 41297). In response to comment, EPA has reviewed the recent storm water regulations and has made a determination that except for the repackaging establishments, storm water at PFPR facilities is already covered by the individual or general NPDES permits issued to cover storm water from industrial activity. For general permits and most individual permits, the storm water regulations require a very detailed pollution prevention plan which must contain a list of site specific best management practices, plans for employee training, and schedules for inspections. EPA believes that the pollution prevention plan required by the storm water regulations mandates practices similar to those outlined in the pollution prevention alternative (see Section III.B.3.). To avoid duplicative regulatory coverage, EPA is considering whether to exempt storm water discharges from the PFPR rule for the Subcategory C facilities (which does not include repackaging establishments). (See Section II.E for a discussion on the change from ''refilling establishments'' to ''repackaging establishments.'')

The coverage of storm water at repackaging establishments is not as clearly defined. The primary SIC code describing repackaging establishments is SIC 5191 and is not specifically included as one of the SIC codes covered under the definition of industrial activity (55 FR 47990) in the storm water regulations (although storm water in storage areas including tank farms is included). EPA believes a gap may be created if storm water from repackaging establishments is not covered in the PFPR effluent guidelines or the storm water regulations. EPA also believes that storm water collected from secondary containment at repackaging establishments where refilling of agricultural pesticides into minibulk containers is conducted, is not different than the type of storm water collected from tank farms at PFPR facilities. EPA solicits comment on the inclusion of the requirements for general storm water permits (i.e., storm water pollution prevention plan) into the PFPR guidelines for Subcategory E facilities (repackaging establishments) or into the storm water regulations under a separate rulemaking.

In addition, EPA believes that the possible contamination of storm water at repackaging establishments can be reduced through use of good housekeeping practices, closed loop refilling systems and small enclosures or roofs around pumps and valves. EPA solicits comment on these or other best management practices associated with repackaging establishments that could be employed to reduce the level of wastewater pollutants found in storm water at these facilities. EPA also requests comment from repackaging establishments that are not able to reuse

storm water or rinsates as make up water for use in applications, if it is in accordance with the product label.

E. Clarification of Definitions

Commenters requested clarification on several issues and definitions in the proposed regulations. Commenters requested specific definitions for formulating, packaging and repackaging, as well as, clarification between pesticide formulating and pesticide manufacturing when they occur at the same facility. Clarification was also requested for the determination that on-site incineration meets the requirements of zero discharge for this regulation. The definition of repackaging establishments, particularly in reference to ''retail sales,'' also prompted comment.

EPA considers the formulation of pesticide products to mean the process of mixing, blending or diluting one or more PAIs with one or more active or inert ingredients, without a chemical reaction that changes one active ingredient into another active ingredient, to obtain a manufacturing use product or an end use product. EPA considers the packaging of pesticide products to mean enclosing or placing a formulated pesticide product into a marketable container. EPA considers the repackaging of pesticide products to mean the direct transfer of a single PAI or single formulation from any marketable container to another marketable container, without intentionally mixing in any inerts, diluents, solvents, other ingredients or other materials of any sort.

Pesticide manufacturers may sometimes add a solvent to a manufactured PAI or intermediate for the purpose of stabilizing transport or at the request of the formulator who is receiving the PAI as a raw material. EPA would like to clarify that manufacturers can perform such operations without being subject to the PFPR effluent guidelines. Typically, such operations are performed without placing the pesticide in a marketable container (i.e., they are shipped in bulk via tank truck, rail car or tote tank). However, PFPR facilities should not conclude that they can receive PAIs (that they do not manufacture), even in bulk quantities, and dilute it with solvent or other carrier without being subject to the PFPR effluent guidelines, as this would be considered formulating.

Although EPA proposed zero discharge limitations with pollution prevention, recycle/reuse and treatment for reuse as the basis for the zero discharge limitation, facilities may meet the requirement of zero discharge to water through a number of other options. Most of these options include hauling wastewater to off-site destinations. These destinations include incinerators, deep wells and commercial waste treaters and, in some cases, wastes are returned to the registrant or manufacturer. EPA received comment requesting clarification of on-site incineration as a means of achieving zero discharge. For purposes of this regulation only, EPA considers on-site incineration a valid option for achieving zero discharge of PFPR process wastewater. Wet scrubbing devices used for air pollution control on these on-site incinerators are not subject to the PFPR effluent guidelines. The only existing on-site incinerators at facilities covered by the PFPR regulation are at facilities which also manufacture pesticide active ingredients. Scrubber wastewater discharges from these incineration activities are currently regulated under the pesticide manufacturing effluent guidelines (58 FR 50638, September 28, 1993) for the PAIs manufactured at these facilities.

Based on comments received, EPA intends to clarify how the PFPR effluent guidelines would apply to refilling establishments. EPA proposed that the PFPR limitations and standards (proposed Section 455.60) would apply to refilling establishments that repackage agricultural pesticides whose primary business is retail sales (59 FR 17904). This is the same scope used in the proposed Standards for Pesticide Containers and Containment regulations (59 FR 6712, February 11, 1994). EPA chose to specify a subset of the universe of refilling establishments within the proposed containment rule to require secondary containment only at agricultural pesticide refilling facilities where there was documented evidence of environmental contamination from leaks and spills. Specifically, EPA believed that it did not have sufficient information regarding the practices and environmental problems at formulators and manufacturers where pesticide refilling may occur to prescribe containment requirements (59 FR 6754).

EPA received comments from State of Minnesota officials on the proposed PFPR effluent guidelines stating that there are refilling establishments whose business is primarily wholesale sales located in their state that repackage agricultural chemicals into refillable containers.

The EPA believes that in an attempt to be consistent with the language in the proposed containment regulations, it may have misstated the intended scope of the PFPR effluent guidelines. EPA believes that the types of refilling establishments used as the basis for extrapolating data to all refilling establishments in the PFPR industry included facilities whose primary business is wholesale and/or retail sales and did not include pesticide formulators or manufacturers or repackagers of non-agricultural pesticides.

EPA intends to clarify the scope of Subpart E of the proposed PFPR effluent guidelines, § 455.60. However, this change in the definition, may cause the regulated community confusion, as there would be two definitions of the term ''refilling establishment.'' Therefore, EPA is considering keeping the term refilling establishment for the Container regulations and using the term repackaging establishments for the final PFPR effluent guidelines. In this situation § 455.60 would read ''a repackaging establishment is an establishment where the activity of repackaging agricultural pesticide product into refillable containers occurs, whose primary business is wholesale or retail sales, and where no pesticide manufacturing, formulating, or packaging occurs''. EPA solicits comment on this clarification.

III. Pollution Prevention Alternative

This section discusses the background on the pollution prevention alternative incorporated in the Zero/P2 Option, including the comments received which led to today's supplemental notice and solicitation for comments. The structure of the alternative and the pollution prevention (P2) practices are described. The notice solicits comment on the degree to which these practices should be specified in the regulatory text (i.e., specified vs. guidance). The wastewater treatment cost savings and pollutant loading reductions that are associated with the P2 practices are briefly discussed. In addition, several options for implementation of the P2 alternative on which EPA seeks comment are described including self-certification, submittal of a plan to permitting authorities, and greater flexibility for the permitting authorities to use best professional judgement (BPJ).

In response to the zero discharge proposal, a variety of commenters stated that PFPR facilities should be given the opportunity to conduct various pollution prevention practices and thereby limit the level of PAIs which would be discharged into navigable waters. Commenters cited to a list of such practices that the Agency had already developed in its Development Document for the proposed rule. These same commenters argued that the zero discharge limitations and standards

were inappropriate given the non-water quality environmental impacts that would arguably result from the increased amount of incineration of process wastewater that would need to occur. Commenters also raised concerns about the costs of the proposed zero discharge standard.

Given these set of comments concerning costs and non-water quality impacts, EPA believes that it is appropriate to consider a pollution prevention (P2) alternative to the proposed zero discharge limitations and standards. As described in more detail below, PFPR facilities would generally have a choice of either meeting the relevant zero discharge standard or limitation or choosing to conduct the listed P2 practices as set forth in Tables B–1 and B–2 of this supplemental notice. Two variations in the structure of the P2 alternative are discussed below, they vary in the practices that would be specified in the regulatory text of the final regulation (see Section III.C.3).

For either variation of the pollution prevention alternative chosen for final promulgation, those PFPR facilities which choose to conduct the P2 practices would need to also agree to make the P2 alternative enforceable, *e.g.,* direct dischargers would need to agree to have the P2 practices included in their NPDES permits and indirect dischargers would need to file notices of intent to use the P2 practices with the POTW. (See Part III.C.4 for discussion and solicitation of comment on several approaches that EPA anticipates could be utilized to implement the P2 alternative.)

If a PFPR facility chooses to adopt the P2 alternative by conducting the P2 practices, agreeing to its enforceability, complying with specified record keeping requirements, and, in certain instances, treating the process wastewater, the facility would be permitted to discharge those levels of PAIs and priority pollutants which remain in the process wastewater stream. The Agency believes that the level of PAIs and priority pollutants remaining in the process wastewater should be considerably reduced and, in most cases, should pose no environmental harm.

Direct dischargers of the covered PAIs which choose to adopt the P2 alternative in lieu of meeting the zero discharge limitations may be subject to the establishment by the permitting authority of more stringent effluent limitations based on applicable water quality standards. See 40 CFR 122.44. In addition, those PFPR facilities that are indirect dischargers which adopt the P2 alternative would remain subject to the Pass Through and Interference prohibitions contained in the general pretreatment regulations. 40 CFR 403.5(a)(1). Indirect dischargers which choose to be subject to the P2 alternative could also be subject to local limits established by the pretreatment authority receiving the facility's wastewater. 40 CFR 403.5(d).

A. Authority

EPA believes that promulgation of this pollution prevention alternative is authorized under the Clean Water Act (CWA) for a number of reasons. In promulgating Best Available Technology Economically Achievable (BAT) effluent limitations, EPA is authorized to consider a number of factors, including, among other things, non-water quality environmental impacts (including energy requirements) (CWA section 303(b)(2)(B)). In addition, in establishing BAT limitations, EPA is to identify the degree of effluent reduction attainable, *e.g.,* the level of pollutant removal attained through implementation of the effluent limitation (CWA section 304(b)(2)(A)). While not required under the CWA, EPA also evaluates the cost-effectiveness of the BAT effluent limitations.

Pretreatment Standards for Existing Sources (PSES) under CWA section 307(b) are designed to prevent the discharge of pollutants that pass through, interfere with, or are otherwise incompatible with the operation of POTWs. The CWA authorizes EPA to establish pretreatment standards for pollutants that pass-through POTWs or interfere with treatment processes or sludge disposal methods at POTWs. The legislative history of the 1977 Act indicates that pretreatment standards are to be technology-based and analogous to the BAT effluent limitations for removal of toxic pollutants. Thus, in proposing the zero discharge PSES limitation, EPA analyzed the same factors which were assessed for the proposed BAT zero limitation standard.

For example, in proposing the original BAT and PSES effluent limitations and the standards for new sources for PFPR facilities, EPA determined that zero discharge represents the best available and that zero discharge was economically achievable for the PFPR industry (59 FR 17891 and 17898). EPA also estimated the pounds of pollutants removed under a zero discharge limitation and determined that such a limitation option was cost-effective by estimating the cost per toxic pound equivalent removed from PFPR process wastewaters (59 FR 17894–99). EPA also evaluated the non-water quality environmental impacts by assessing the effects a zero discharge limitation and standard would have on air pollution, solid waste generation, and energy requirements (59 FR 17900). Based upon those evaluations and analyses of the other factors to be considered in promulgating the BAT and PSES effluent limitations, the Agency found zero discharge to be an appropriate limitation for pollutants in wastewater from PFPR facilities.

However, in response to the proposed rule, a number of commenters argued that EPA had underestimated the non-water quality environmental impacts of a zero discharge limitation. In particular, commenters stated that air pollution would increase because of the increased use of incineration as an option for disposal of process wastewater. In addition, commenters argued that energy requirements resulting from BAT and PSES zero discharge limitations would be greater than those estimated by EPA because of the increased consumption of fuel for use in transporting wastewater to incineration facilities or deep well injection sites and the increased fuel needed for burning these dilute wastewaters in an incinerator.

In response to these comments, EPA re-evaluated its position on the degree to which the non-water quality environmental impacts effect this regulation and now recognizes that under a zero discharge BAT or PSES limitation for this industry, significantly increased amounts of process wastewater that cannot be recycled, reused, or treated may be transported to incinerators for disposal (resulting in an increase in air emissions) and that increased amounts of energy may have to be used for such transport and for incineration of these dilute wastewaters.

Neither this revised assessment of non-water environmental quality impacts or the revised economic assessment (see Section V) alter EPA's determination that a zero discharge limitation is an appropriate BAT and PSES limitation for pollutants in PFPR process wastewater. However, in response to concerns raised by commenters about the costs and non-water quality environmental impacts of the zero discharge option, EPA believes it is appropriate to consider the Pollution Prevention (P2) alternative presented by these commenters.

To evaluate economic impact and economic efficiency, EPA has grouped the zero discharge proposal and the P2 alternative as proffered by commenters into the Zero Discharge/P2 Option

(Zero/P2 Option). Under this Option, all PFPR facilities subject to the final rule would have a choice of either meeting the zero discharge limitation (or pretreatment standard) or employing the P2 practices and discharging the small amount of PAI pollutants that remain in the process wastewater.

EPA believes that this Zero/P2 Option addresses both the economic cost and non-water quality environmental impacts which commenters believed were not adequately considered by the Agency in its proposed zero discharge option. As discussed in more detail in Section V, under the Zero/P2 Option both the costs impacts and the cost effectiveness compare favorably to the proposed Zero Discharge Option alone. Moreover, the Zero/P2 Option will reduce the level of adverse non-water quality environmental impacts which may occur in comparison to those resulting from a Zero Discharge limitation and standard alone by using pollution prevention practices to decrease the use of cross-media transfers (off-site disposal to incineration, deep-well injection, central waste treaters, etc. * * *).

Under the Zero/P2 Option, PFPR facilities would need to agree to implement the listed P2 practices in lieu of complying with the zero discharge limitation or standard and also agree to make compliance with the P2 practices enforceable. For PFPR facilities that directly discharge (only PFPR/Manufacturers) the covered PAIs into navigable waters, EPA believes that the P2 alternative is authorized under the CWA as a system of best management practices (''BMPs'') that may be incorporated into any NPDES permit. (CWA section 304(e)). BMPs are defined, in part, to mean ''schedules of activities, prohibitions of practices, maintenance procedures, and other management practices to prevent or reduce the pollution of ''waters of the United States * * *.'' 40 CFR 122.2 EPA believes that the list of pollution prevention practices contained in Tables B–1 and B–2 fit within that definition. The NPDES regulations authorize permitting authorities to include BMPs in NPDES permits under a number of conditions. 40 CFR 122.44(k). EPA believes that incorporation of these pollution prevention practices as BMPs into an NPDES permit is authorized because they carry out the purposes and intent of the CWA. 40 CFR 122.44(k)(3).

EPA recognizes that in the proposed rule, the Agency took the position that regulating PFPR facilities on a nationwide basis through the use of BMPs may not be appropriate because they may not provide the needed flexibility for the many different facilities subject to any final rule (59 FR 17901, April 14, 1994). However, EPA has provided for the needed flexibility in the Zero/P2 Option by making only certain pollution prevention practices mandatory if a facility chooses the P2 alternative, i.e., those practices contained in Table B–1. The other pollution prevention practices (Table B–2) may be modified under a variety of circumstances. In addition, EPA is soliciting comment on a variation of the P2 alternative where only practices which directly reduce pollutant loadings to wastewater are specified in the regulatory text and where water conservation practices are only provided as guidance (see Section III.C for discussion on this variation).

For PFPR facilities that discharge covered PAIs into navigable waters indirectly through a POTW, EPA believes that the Zero/P2 Option is appropriate as an alternative pretreatment standard under CWA section 307(b) and does not conflict with the implementation of the general pretreatment regulations. 40 CFR Part 403. Pretreatment standards for existing and new sources are designed to prevent the discharges of pollutants that pass through, interfere with, or are otherwise incompatible with the operations of POTWs. (CWA 307(b)).

As stated above, in establishing pretreatment standards for existing and new facilities, EPA is authorized to evaluate the same factors that it assesses in establishing BAT limitations. In assessing the removal of pollutants from wastewater, the cost impact, cost effectiveness, and non-water quality impacts of the P2 alternative for both the Zero Discharge proposed PSES and PSNS standards and the P2 alternative, EPA has found that the P2 alternative (as part of the Zero/P2 Option) compares either favorably (cost impact, cost effectiveness, non-water quality impacts) or similarly (pollutant removal) with the Zero Discharge Option. Thus, EPA believes that it is appropriate to consider the P2 alternative as pretreatment standards for existing and new sources.

B. Background

As discussed in Section I, EPA proposed a zero discharge regulation for wastewaters generated by the formulating, packaging and repackaging of pesticide products, with the exception of exterior wastewaters from facilities formulating, packaging and repackaging certain sanitizer active ingredients. The basis for the proposed zero discharge regulation was pollution prevention, recycle/reuse and treatment and reuse when necessary. EPA received comment on the technical feasibility and economic achievability of the proposed zero discharge regulation. Many comments focused on circumstances where wastewater was not completely reusable. Commenters requested that EPA reduce both the cross-media and economic impacts associated with the proposed regulation.

One situation where commenters believe complete reuse is not achievable concerns EPA's existing policy on cross-contamination. Currently, EPA sets a standard of zero for cross-contamination. This means that an active ingredient may not be present at any concentration in a FIFRA registered product where it is not listed on the confidential statement of formula (CSF) of that product. During the study phase for the development of the proposal, the industry practice was to triple rinse containers and equipment. Because of recent EPA enforcement actions, industry commented that additional rinsing is being used to comply with the cross-contamination policy. EPA is currently reviewing the pesticide cross-contamination policy.

Commenters believe that more aggressive enforcement of a zero-standard cross-contamination policy would create additional wastewaters that would not be reusable and that were not taken into account when the proposed zero discharge regulation was developed. According to commenters, a facility that performs a triple rinse of the equipment interiors when changing from formulating one product to another, may have to perform additional rinses (e.g., a five times rinse) to ensure a level of zero cross-contamination. Commenters stated that even in cases where the rinsate from the multiple rinse could be stored for use in a future formulation, the additional rinses create more rinsewater than could be reused and that these very dilute wastewaters would have to be contract hauled for off-site disposal to achieve zero discharge. Commenters believe this additional contract hauling of wastewater not only makes the proposed regulation economically unachievable, but increases the opportunity for cross-media impacts.

A second situation described by commenters focuses on the need for periodic blowdown of the treatment system. Commenters believe that even when using an appropriate treatment system, such as the Universal Treatment System (UTS), continuous reuse is not technically feasible (i.e., PFPR wastewater is not reusable indefinitely). Commenters state this is due to a

buildup of salts in the system that would require a periodic blowdown to maintain a well operated treatment system. To achieve zero discharge this blowdown wastewater would have to be contract hauled for off-site disposal, increasing the economic impact to the industry and increasing the opportunity for cross-media transfers.

The third situation described by commenters concerns the reuse of water following treatment. In the proposed regulation, EPA demonstrated, in the discussion on estimation of compliance costs, that it did not expect facilities to reuse wastewaters that had been treated directly into product or for cleaning equipment interiors (59 FR 17876). Although some facilities do reuse treated wastewaters in this way, only interior rinsates that could be reused without treatment and could, therefore, be directly reused into formulation or stored for reuse in a future formulation of the same or compatible product formed the basis for the proposed zero discharge. EPA recommended that wastewaters that needed treatment prior to reuse could be reused for their original purpose (i.e., treated floor wash can be used to wash floors). However, commenters felt that EPA did not account for wastewaters that could not be reused for their original purpose such as interior wastewaters that could not be stored due to concerns for microbial growth or interior wastewaters generated when changing a formulating or packaging line from a solvent-based product to a water-based product. EPA notes that cost estimates for the proposed regulation did include costs for contract hauling similar excess wastewaters for off-site incineration. However, EPA does recognize that, as stated previously, contract hauling these wastewaters for incineration may increase economic and cross-media impacts.

Due to the concerns described above, many commenters requested a discharge allowance for these excess or non-reusable wastewaters. Commenters suggested that they would be willing to agree to use specified pollution prevention or best management practices and pointed to the pollution prevention, recycle and reuse practices described in the preamble to the proposal (59 FR 17866) and the technical development document [EPA #821–R–94–002]. In some cases commenters provided examples of possible additional practices they would be willing to agree to use. EPA believes that a discharge allowance (''pollution prevention allowable discharge'') may provide an added incentive to increase the use of pollution prevention and recycle practices while ensuring that facilities are maximizing pollutant reductions in the wastewater without increasing cross-media impacts.

The following sections describe the possible variations in the structure of the pollution prevention alternative, the practices which may be included as part of final regulation for either variation, and the various approaches for implementing the final rule.

C. Structure of the Alternative

For purposes of soliciting comment on today's supplemental notice, two variations of the structure of the pollution prevention alternative, as they might appear in the final regulation are discussed below. EPA has also provided possible regulatory text in Appendix B of this notice to assist commenters in focusing their written comments. Appendix B to this notice focuses on a version of the P2 alternative which would list all the pollution prevention, recycle and reuse practices that would be specified in the final regulatory text. The other version of the P2 alternative would specify, in the final rule, only those pollution prevention, recycle and reuse practices that directly reduce pollutant loadings in the wastewater, while only recommending the use of the water conservation practices and equipment as guidance. For example, in this case the use of a floor scrubber would not be specified in the regulation; however, floor wash from cleaning liquid production area floors would still require treatment prior to being considered a P2 allowable discharge. Thus, floor scrubbers would be recommended because they can reduce the size and cost of the treatment system by reducing the volume of wastewater requiring treatment. (See Section III.C.4 for a discussion on an implementation approach which could increased the use of BPJ in reference to the specified practices).

EPA believes that although most facilities would choose to use both the specified and recommended practices, this approach may be more difficult to permit and enforce. Also, this approach does not ensure that the total pounds of pollutants in the discharged wastewaters are at desirable levels. Without the use of certain flow equipment devices, the maximum reusability of certain wastewater sources, particularly interior equipment rinsates, may not be possible (i.e., facilities may have too much rinsewater volume than is called for in the formulation). In addition, in the case where water conservation practices are not incorporated into the final regulatory text, the use of dilution to achieve the P2 allowable concentrations may be encouraged.

In addition to soliciting comment on these variations, EPA is soliciting comment on the approach related to implementation of the pollution prevention alternative. (See Section III.C.4. for a discussion on implementation).

1. *Alternative to Zero*

The pollution prevention alternative has been designed to serve as an alternative to the proposed zero discharge regulation. This means that if a facility agrees to comply with the prescriptive practices (and any local limits which may be more stringent) and make them enforceable, the facility would be allowed a discharge allowance (P2 allowable discharge). However, if a facility does not agree to comply with the requirements of the alternative they would be subject to a zero discharge limitation or standard.

2. *Definition of Pollution Prevention Allowable Discharge*

EPA has extensively evaluated the definition of the P2 allowable discharge for use in the pollution prevention alternative. EPA is not planning to set a numerical definition of P2 allowable discharge for many of the same reasons that EPA did not set numerical limitations and standards in the proposed regulation (59 FR 17875). Briefly, the reasons included the lack of data, such as long term monitoring data necessary to set numerical limitations, lack of analytical methods for testing for many of the PAIs in wastewater, and the large annual cost that would be associated with compliance monitoring for all PAIs that a PFPR facility may use in production over a year's time.

In general, the definition as described would require that, in addition to performing the specified practices, certain waste streams be treated (or pretreated) prior to being eligible for consideration as an ''allowable discharge.'' In order to allow additional flexibility, EPA is considering allowing permitting authorities (NPDES or pretreatment authority) to use BPJ to make a special modification to this definition in which treatment would not be necessary for a specific facility. EPA solicits comments on the use of a special modification to the definition. The remainder of this section focuses on the definition of pollution prevention allowable discharge.

Use of a definition for P2 allowable discharge should account for the difference between waste streams of high concentration and other waste streams (e.g., interior wastewaters, floor

wash and spill and leak cleanup water versus DOT test bath water or safety equipment cleaning water). Due to the additional pollutant removals afforded by treatment at the POTW, EPA has developed similar but separate definitions for indirect and direct dischargers. In brief, treatment would be required for any waste streams discharged to the nation's waters by direct dischargers. The definition of P2 allowable discharge for direct dischargers will be discussed later in this section. The definition of P2 allowable discharge for indirect dischargers that send wastewater to POTWs is constructed as a two-part definition, which would apply to waste streams of different raw concentrations.

For PFPR process wastewaters, excluding interior equipment cleaning, floor wash and spill and leak cleanup water, EPA believes that (1) many of these sources contain lower concentrations of pollutants prior to pretreatment and (2) the use of the specified pollution practices alone will sufficiently reduce the pollutant loadings in the wastewater when followed by treatment at a POTW. However, based on raw wastewater characterization data collected on sampling visits to PFPR facilities, pretreatment may be necessary for interior equipment cleaning, floor wash and spill and leak cleanup water to reduce the levels of pesticide active ingredients and other pollutants. Thus, EPA is requesting comment on the following two part definition of pollution prevention allowable discharge for indirect dischargers:

Pollution prevention allowable discharge (excluding interior wastewaters, leak/spill cleanup water and floor wash) means: the quantity of/concentrations in PFPR process wastewaters that remain after a facility has demonstrated that it is using the specified practices of the Pollution Prevention Alternative as listed.

Pollution prevention allowable discharge for interior wastewaters, leak/spill cleanup water, and floor wash means: the quantity of/concentrations in PFPR process wastewaters that remain after a facility has demonstrated that it is using the specified practices of the Pollution Prevention Alternative as listed *AND* that have been pretreated using appropriate pollution control technologies which can be used individually or in conjunction with one another as listed in Appendix C, or an equivalent system to achieve a sufficient level of pollutant reduction. Facilities must demonstrate that the appropriate pollution control technology is properly maintained and operated.

Appendix C contains those pollutant control technologies, such as hydrolysis, chemical oxidation, metals precipitation and activated carbon adsorption, which have been used for estimating compliance costs on a PAI specific basis. In general, these treatment technologies have been determined to be effective in treating pesticide containing wastewaters in literature, in bench or pilot scale treatability studies or in the Pesticide Manufacturing effluent guidelines.[2] These are the same technologies that were presented as part of the Universal Treatment System at the time of proposal. However, these technologies are PAI specific and may need to be used in conjunction with one another to provide treatment for all PAIs used at a facility over a period of time. In addition, facilities may experience difficulties treating wastewaters that contain emulsions, therefore, ''appropriate'' treatment for emulsified wastewaters must include an emulsion breaking step.

Note: EPA has costed facilities for these types of dynamic treatment needs.

In the proposed regulation, EPA recognized that although the 1978 regulation for the pesticides industry set a zero direct discharge limitation (BPT) on wastewaters generated from the formulating, packaging and repacking of pesticide products, some facilities were directly discharging PFPR wastewaters. These facilities manufacture pesticide active ingredients, as well as, perform PFPR activities (referred to as PFPR/Manufacturers in the proposed regulation) and were able to comply with zero discharge (BPT) by treating these wastewaters through the same treatment system used for treating their pesticide manufacturing wastewaters without an additional allowance for PFPR wastewater pollutants in the facility's pesticide manufacturing discharge limits. These facilities should be the only PFPR facilities currently discharging directly to the nation's waters.

These direct discharging pesticide manufacturing facilities have treatment systems that are required to meet the BAT pesticide manufacturing limitations (57 FR 50368). However, because these facilities discharge directly into the nation's waters without the removals afforded by secondary treatment at POTWs, EPA believes that, unlike indirect dischargers, these facilities may have to treat all PFPR wastewaters. Therefore, the following definition of pollution prevention allowable discharge would apply to direct dischargers who formulate, package or repackage pesticides and manufacture pesticides.

Pollution prevention allowable discharge (for PFPR/Manufacturers) means: the quantity of/concentrations in all PFPR process wastewaters that remain after a facility has demonstrated that it is using the specified practices of the Pollution Prevention Alternative as listed *AND* that have been treated using appropriate pollution control technologies which can be used individually or in conjunction with Manufacturer's treatment systems or one another as listed in Appendix C, or an equivalent system to achieve a sufficient level of pollutant reduction. Facilities must demonstrate that the appropriate pollution control technology is properly maintained and operated.

By using the above definition, EPA would be including wastewaters into the pollution prevention alternative generated at these facilities by the PFPR of pesticides that are manufactured and formulated, packaged and/or repackaged as well as the wastewaters from the PFPR of those pesticides that are not also manufactured. In the case of these PFPR/Manufacturers, the term ''appropriate'' pollution control technology takes on additional meaning than the one discussed above for indirect dischargers. It also implies that when the pollution control technology in place for treating their manufacturing wastewater is not identified in Appendix C, in literature, or in treatability studies as an effective treatment technology for a PAI that they only use in formulating and packaging operations, they must add to their existing treatment system. EPA is soliciting comment on the above definition.

In the above definitions, for both indirect and direct discharges, EPA makes reference to allowable amounts of pollutants in terms of concentration and quantity.

Note: EPA is considering a variation of the P2 alternative which would specify certain P2 practices while providing water conservation practices solely as guidance.

The main purpose for including volume in the definition of P2 allowable discharge is that in lieu of setting a mass-based definition, the incorporation of volume or flow reduction is meant to discourage the use of dilution of wastewaters to create concentrations that appear to be at an allowable level. In addition, EPA notes that when facilities use water conservation technologies to control the volume of wastewater they generate, they can more easily store and reuse interior rinsates, which may result in additional pollutant removals. Also, the use of flow

[2] EPA is still determining the appropriate treatment technologies for a number of inorganic pesticide chemicals. Activated carbon (AC) adsorption was only used to provide a conservative cost estimate. Therefore, listed technologies for such PAIs are subject to change for final regulation.

reduction practices or equipment reduces the volume of water that must be treated before it can be considered a P2 allowable discharge. Reduced volumes require smaller treatment systems that, therefore, cost less to install and operate and run more efficiently, and in using certain technologies, such as precipitation/clarification, will result in reduced effluent pollutant loadings. Some facilities may adopt flow reduction strategies to save money and incidentally save loadings.

EPA believes that the definition of P2 allowable discharge can be implemented for this industry without the use of numerical limitations. In the pollution prevention alternative, EPA has included the requirement for paperwork that would include a discussion describing how a facility would demonstrate to their permitting authority (NPDES or pretreatment authority) that they are operating a well maintained treatment system (UTS or equivalent) that includes pollution control technologies that are appropriate for the PAIs handled at their facility. In addition, the paperwork would have to include the rationale for choosing the method of demonstration. For example, a facility may determine a surrogate method for determining breakthrough of their carbon adsorption unit. This method could be used instead of performing analytical testing for all or any of the PAIs that may have been in production at the facility over a specific period of time.

Note: EPA will submit an ICR to the Office of Management and Budget concerning this paperwork prior to final promulgation.

In addition, some indirect discharge facilities may be able to achieve complete pollution prevention, recycle and reuse of some wastewater sources, such as interior equipment cleaning rinsates, that would otherwise require treatment prior to being considered allowable discharges under the pollution prevention alternative. Such facilities would not have to incur the cost of treatment to discharge their remaining streams to the POTW (assuming no local limits requiring treatment). These facilities would not be operating treatment systems to comply with this regulation and; therefore, would not need to include a discussion in the necessary paperwork that demonstrates they are operating a well maintained treatment system. However, these facilities should indicate in the necessary paperwork that the wastewater sources which remain and which they are discharging are not the wastewater sources that require treatment under the pollution prevention alternative. In addition, there may also be facilities that choose comply with the zero discharge track of the Zero/P2 Option. For example, these facilities may choose to recycle and reuse wastewaters to the best of their ability and contract haul remaining wastewaters to avoid incurring the costs associated with installing and operating a treatment system.

3. *Description of Pollution Prevention Practices*

EPA has developed a list of pollution prevention, recycle and reuse practices for the pollution prevention alternative. The list is derived from the pollution prevention, recycle and reuse practices that have been demonstrated in the PFPR industry and are documented in the public record to the proposed rule. (See Section 7 of the Technical Development Document for the proposed rule [EPA 821–R–94–002].) If performed, these practices will reduce the pollutant loading of the wastewater and reduce the volume of wastewater by creating opportunities for reuse. In some instances the water conservation aspect of the practices will discourage the practice of dilution of the wastewater to create concentrations that appear to be at an allowable level.

For use as part of the pollution prevention alternative, the list has been separated into two tiers: (1) Practices that discharger must agree to comply with without any modification; and (2) other practices that discharger must agree to with acceptable justification. The second list has been set up to include possible modification based on comments received on the proposed rule or during meetings with industry. These modifications are discussed below. Both sets of pollution prevention, recycle, and reuse practices are included in Appendix B of this supplemental notice.

The list of pollution prevention practices for which no modification is provided includes: the use of flow reduction on hoses; the use of good housekeeping practices such as using drip pans and performing preventive maintenance; specific practices concerning the reuse of rinsate from rinsing drums that contain liquid PAI (or inerts) for formulation of water-based products; the sweeping of dry production areas prior to rinsing; and the use of recirculation (with periodic blowdown) when operating air pollution control wet scrubbers and continuous overflow DOT aerosol leak test baths. In addition, this list of pollution prevention practices includes a provision for some equipment dedication that is contingent on the ability to reuse interior rinsates as discussed on the second list (See discussion below). In the version of the P2 alternative, where water conservation practices and equipment would only be included as guidance and not specified in the regulatory text, the list above would be modified. The use of flow reduction devices on hoses and the use of recirculating air pollution control scrubbers and DOT test baths would not be included in the regulatory text of the final regulation and would only be recommended. EPA solicits comment on the practices contained in Table B–1 of Appendix B and whether the water conservation practices and equipment discussed above should be used only in guidance.

The second list sets forth other pollution prevention, recycle and reuse practices that may be modified with acceptable justification. In Appendix B, acceptable justification for modifying an individual practice is described following the description of the practice itself. A modification, for purposes of the pollution prevention alternative, means that a facility would no longer have to perform a listed practice or that it would need to comply with the described alternative practice. However, the modification only applies to the specific practice from the second list for which the modification has been justified and to no other listed practices. Facilities would be required to discuss all modifications in the paperwork necessary for the pollution prevention alternative.

The pollution prevention, recycle and reuse practices on the second list include: practices concerning the reuse of rinsates from rinsing drums that contain liquid PAI (or inert) for formulation of solvent-based products; the use of low volume/high pressure rinsing equipment for rinsing PFPR equipment interiors when rinsing with water; the use of floor scrubbing machines or mops for cleaning floors in liquid production areas; the segregation of production equipment for water and solvent based production; and the storage of interior equipment rinsates for use in future formulation of the same or compatible product. Water conservation equipment such as low volume/high pressure rinsing equipment, floor scrubbing machines, and mops and buckets that do not directly reduce pollutant loadings to the wastewater and, therefore, may not be specified in the regulatory text of the final rule. Instead, they may be discussed as guidance.

Upon reviewing the comments to the proposed regulation and discussions

with facilities on post-proposal site visits, EPA has determined situations where it may be justified not to conduct these practices. For example, facilities may not always be able to store interior equipment rinsates for use in future formulation of the same or compatible product for a variety of reasons. These reasons include: microbial growth in the stored product or other deterioration such as phase separation or formation of precipitate; space limitations; dropping of product registration or discontinuation of production for a specific product; customer specifications (e.g., manufacturer/formulator for which a toll formulating contract directs otherwise); and the facility only packages but does not formulate the product. EPA is soliciting comment on the above reasons for modification and whether the water conservation equipment discussed above should be used only in guidance.

Facilities who modify a practice must provide justification. For example, facilities who modify the practice of storing rinsate for future formulation for any of the reasons above must provide justification such as: evidence of microbial growth or deterioration or written statement from the customer for which they are contract toll formulating directing otherwise (e.g., the contract specifies that the rinsate be sent back to customer or sent for off-site disposal). In some instances in which modifications are allowed, specific alternative practices must be agreed to and conducted in addition to those in the list of specified practices (Table B–1, Appendix B). These specific alternative requirements are listed with the second list of pollution prevention, recycle and reuse practices in Table B–2, Appendix B and would be incorporated into the regulatory text at the time of promulgation. For example, where a facility cannot store interior rinsates for use in future formulation due to space limitations, the facility would have to store rinsates for use in future formulation of the same or compatible product only for their most frequently produced products.

There is also a contingent practice in the first list of pollution prevention practices (Table B–1, Appendix B) which mandates some dedication of equipment that will reduce rinsates from changeover. Under this contingent practice, facilities would not have to dedicate all equipment, but instead would have to dedicate equipment in at least one of the following ways, by: frequently produced products (i.e., top production products); hard to clean products (e.g., viscous, sticky or colored products); product families; or a portion of the formulating/packaging equipment (e.g., just the mix tank, just the agitator, just the transfer hoses). Facilities would not have to dedicate equipment for the same products where they cannot store the interior rinsates for future formulation. EPA believes such a contingent practice would be over prescriptive and would possibly be economically unachievable at some PFPR facilities. The purpose of this contingent practice for dedication is to avoid the generation of wastewater where plausible in order to off-set the wastewater generated when a facility has modified the specified practice. EPA solicits comment and data on the pollutant loadings in wastewater and the volume of wastewater saved by the use of dedicated equipment in any of the ways listed in the above discussion.

In general, EPA believes that the use of the practices specified by the pollution prevention alternative, including practices focusing on water conservation, create the opportunity for increased source reduction through reusability of wastewaters. This would lead to large pollutant reductions and, in the case of water conservation practices, smaller, less expensive treatment systems. Use of the practices as part of the pollution prevention alternative (with a P2 discharge allowance) should also limit cross-media impacts by reducing the amount of process wastewater that would otherwise be transported off-site and incinerated.

4. *Implementation of the Pollution Prevention Alternative*

This section describes several implementation options for this effluent guideline. EPA solicits comment from all interested parties. In addition, EPA hopes to provide guidance on the implementation of the final rulemaking through the use of a guidance manual and regional workshops. EPA is soliciting comment on additional forms of guidance that would be useful.

EPA believes that either variation of the pollution prevention alternative (all practices specified vs. some as guidance only) could be implemented in a variety of ways. Each PFPR facility subject to this regulation, if promulgated with the Zero/P2 Option, will need to make an initial choice: to either comply with the Zero Discharge effluent limitation or pretreatment standard or choose to agree to conduct the listed pollution prevention practices and also agree to make the practices and the pollution prevention discharge allowance enforceable. However, beyond this initial choice, the continued implementation of the Zero/P2 Option will differ for direct and indirect dischargers.

For direct dischargers, the Zero/P2 Option will be implemented through the NPDES permitting process. For each direct discharging PFPR/Manufacturer or new facility, the facility would need to make the initial choice at the permitting or permit renewal stage. If the facility chooses the P2 alternative over the zero discharge limitation, the permitting authority would include all of the P2 practices and the specified treatment technologies in the facility's NPDES permit. The pollution prevention practices and treatment technologies included in such a NPDES permit would be enforceable under CWA sections 309 and 505.

PFPR facilities which are indirect dischargers would also need to make an initial choice of meeting the zero discharge pretreatment standard or adopting and implementing the P2 practices and the treatment technologies (if so specified). If the indirect discharging PFPR facility chooses the P2 alternative, EPA would propose that the facility file a Notice of Intent (NOI) with the pretreatment authority. In addition, indirect discharging PFPR facilities which choose the P2 alternative would need to self-certify in writing that they are performing the listed practices or provide the necessary justification for modifying certain of the pollution prevention practices as listed in Table B–2. This certification would require a signature by the appropriate manager in charge of overall operations of the facility to assure that information provided is true, accurate, and complete to the best of his or her knowledge. The pretreatment authority, as part of its approved pretreatment program, must have the authority to ensure compliance with a pretreatment standard (40 CFR 403.8(f)(1)(ii)) and to carry out inspections of the indirect dischargers' self-certifications and of the paperwork described below. 40 CFR 403.8(e)(1)(v).

Both direct and indirect discharging facilities would be required to keep certain paperwork on-site and available for permitting authorities and enforcement officials. For each facility, this necessary paperwork would include, at a minimum, descriptions of the practices that are being employed and how they are being implemented, discussions of any modifications that are made and the justification for each modification (including records that indicate, for example, microbial growth, space limitations, infrequent or intermittent production). The necessary paperwork must also include: (1) A discussion on demonstrating that the treatment system being used contains

the appropriate treatment technologies (i.e., listed by PAI in Appendix C or equivalent established in literature) for removing PAIs that are used in production at their facility and could be in their wastewater; (2) and establishes a method for demonstrating that the treatment system is well operated and maintained; and (3) the rationale for choosing the method of demonstration.

Permitting authorities could, after receipt of the NOI or at the time of issuing, reissuing, or modifying the NPDES permit, inspect the PFPR facility to see that the listed practices are being employed, that the treatment system is well operated and maintained and that the necessary paperwork provides sufficient justification for any modifications. EPA solicits comment on this approach to implementation of the pollution prevention alternative.

EPA also requests comment on a second implementation option. Instead of utilizing self-certification, this approach could require facilities to submit the necessary paperwork to the permit writer or pretreatment authority for approval. For this option, EPA is requesting comment on whether the submitted paperwork should support the practices as listed in Appendix B of this notice or be based on the practices listed in Appendix B, but allow flexibility to the permitting authority. More specifically, the permitting authority could add to or replace practices in Appendix B with new or innovative practices that are more effective at reducing the pollutant loading (directly or indirectly) from a specific facility to the environment, based on best professional judgement (BPJ). EPA realizes that requiring submittal of paperwork to and approval from the permitting authority would increase the burden and may cause untimely delays in implementing this option. In addition, EPA believes that it may be difficult for the permitting authority to review a facility specific plan that is not based wholly on the listed practices found in Appendix B of this notice. This approach may provide more flexibility for the industry and the permitting authority; however, it will substantially increase the burden on the permitting authorities.

As in other effluent guidelines and pretreatment standards, the compliance deadline for the PFPR pretreatment standards for existing sources would be three years following promulgation and the date of issue, reissue or modification of the NPDES permit for direct discharging PFPR/Manufacturing facilities. New source standards and limitations (PSNS and NSPS) must be complied with when a facility commences the discharging of wastewater.

IV. Costing Methodology

This section will briefly describe the revisions that have been made to the costing methodology that was used to estimate compliance costs and the pollutant removals for the proposed rule. These revisions are discussed more thoroughly in the updated version of the Cost and Loadings Report and the Treatability Database Report which can be found in the public docket.

In addition to the changes that are made due to the revisions to the scope that are being considered (as discussed in Section II), there are three areas where changes have been made to the costing methodology. These include revisions to: (1) The treatability database to include activated carbon adsorption (AC) as the treatment technology for certain PAIs where additional treatability information has been identified; (2) the costs for the zero discharge alternative to include costs for off-site incineration of non-reusable wastewaters; and (3) the computer model used to develop costs and pollutant removals for the proposed rule to estimate compliance costs and pollutant removals for the pollution prevention alternative.

In order to adjust the estimated compliance costs and pollutant loadings to account for the exemption of specific PAIs and wastewater sources (see Section II for discussion of exemptions), EPA had to remove the PAIs from the influent database. In addition, EPA had to make adjustments to account for the volume of wastewater previously contributed by the PFPR of these PAIs. In the situation where exempted PAIs are the only PAIs used in a product or on a line, it is not difficult to zero out the associated pollutant removals, treatment cost estimates or the wastewater related to production of the exempted PAIs. However, when exempted PAIs are used in conjunction (in products or on shared lines) with PAIs that are covered by the rule, only the pollutant loading contributed by the exempted PAIs can be excluded; the total wastewater related to the production must still be costed. A more extensive description on the revisions to wastewater volumes due to the exemption of certain PAIs (including PAIs with non-surveyed production) can be found in the updated Cost & Loadings Report. These revisions tend to reduce an individual facility's annualized compliance cost estimates as compared to the proposed rule.

EPA revised the treatability database to assign activated carbon as the treatment technology for certain PAIs where additional treatability information has been identified. In addition to deciding which treatment technologies were appropriate for these PAIs through literature searches and technology transfers, EPA used the same transfer basis as was used in the proposal to transfer achievable effluent concentrations (i.e., the 90th percentile highest achievable effluent concentration) for these PAIs. This information was added to the treatability database for the PFPR industry. This revision tends to increase annualized compliance cost estimates for some facilities as compared to costs estimated at proposal.

In addition to the overall revisions above, revisions were made specifically to the cost estimates for achieving zero discharge of wastewater for the proposed rule. In the proposed rule, EPA only included costs for contract hauling to off-site incineration of treatment system sludges. Based on comment, EPA has revised the costing methodology for the zero discharge option to reflect additional contract hauling of interior equipment rinsates to off-site incineration, and to account for possible water balance problems. Interior equipment cleaning rinsates from lines where detergents or solvents were used are now costed for contract hauling for off-site incineration rather than treatment and reuse. Based on comment, EPA also increased overall, the percentage of the blowdown (bleed off stream) from the UTS. This revision accounts for the volume of wastewater that cannot be reused due to either a salt buildup or a water balance problem at the facility. The percent for blowdown has been increased from 0.2% in the proposed rule to 5% in this notice.

Note: EPA continued to use a blowdown of 0.2% for estimations for the pollution prevention alternative, because under this alternative facilities can discharge these excess wastewater under the P2 discharge allowance.

A third revision was made which was applied to both the revised zero discharge cost estimates and those estimated for the pollution prevention alternative. For the proposal, EPA costed directly reusable rinsewaters that were stored for longer than 90 days to be treated prior to reuse. This conservative approach was used to address the Resource Conservation and Recovery Act (RCRA) limitation for accumulating hazardous wastes for more than 90 days without a permit or interim status (40 CFR 262.34). Instead, EPA is using a more realistic approach by assuming that since these rinsewaters

are directly reusable (i.e., do not require treatment prior to reuse, and due to stringent product specifications, do not contain constituents that are not used in the product) they would not be considered a waste, and therefore, would not trigger the 90 day RCRA accumulation limitation on listed or characteristic hazardous wastewaters. Therefore, EPA has revised the cost model so that it no longer costs stored interior equipment cleaning rinsates that have been stored for greater than 90 days for treatment through the UTS. Instead, these reusable rinsewaters are costed for storage only (not RCRA storage costs).

Note: To avoid speculative accumulation, 75% of these directly reusable rinsewaters must be reused within a calendar year.

Estimated annualized compliance costs to achieve zero discharge tend to decrease due to changes in scope, but increase in the aggregate due to the three revisions described in the above discussion as compared to the proposed rule.

Finally, EPA also developed estimated annualized compliance costs and pollutant removals for the pollution prevention alternative. This cost estimate is based on the version of the P2 alternative which would specify the pollution prevention, recycle and reuse practices in the regulatory text of the final rule (see Section III.C). However, it can also be viewed as a conservative estimate for the P2 alternative where water conservation practices are not specified in the regulatory text, but are instead provided as guidance.

The computer model used for estimating costs was altered slightly to estimate costs for the pollution prevention alternative. Capital costs were added to account for equipment (e.g., cost of floor scrubbing machine or other flow reduction devices) needed to perform the specific practices. In reference to this equipment, EPA applied an 80% reduction to floor wash and exterior equipment cleaning volumes. Also, revisions were made to include removing the cost of pretreatment for the wastewater sources that would not require treatment prior to discharge to a POTW (e.g., DOT aerosol test bath water or safety equipment cleaning). [Note: EPA has not estimated costs for direct discharging stand alone PFPR facilities because these facilities are currently considered to be at zero discharge]. Wastewaters that would require treatment prior to discharge under a pollution prevention discharge allowance were costed for treatment through the UTS (including a 0.2% blowdown costed for contract hauling sludges for incineration). As mentioned above, EPA did not include costs for treating interior equipment cleaning rinsates that are stored for greater than 90 days. In addition, interior equipment cleaning rinsates from lines where detergents were used were costed for treatment and discharge under the P2 discharge allowance. In the cases of indirect dischargers, many facilities benefited from the decrease in the size of the UTS necessary to treat their wastewater remaining after utilizing the specified practices. For the purpose of conducting the economic analysis, including determining the incremental cost-effectiveness (see Section V), EPA revised the costs and loadings of Option 2 (from proposal) to reflect the costs and loadings associated with the pollution prevention alternative. Both the pollution prevention alternative and Option 2 from the proposal are based on pollution prevention with treat and discharge; however, the pollution prevention alternative would only allow reduced discharge and is designed so that it would not have to require numerical limitations for compliance, as did Option 2 in the proposal.

EPA requests comment on the revisions to the costing methodology.

V. Estimated Costs, Economic Impacts, and Cost-Effectiveness

A. Options at Proposal

EPA considered 5 PSES options at proposal. Options 1 and 2 were not zero discharge options but involved treatment of wastewater and discharge to POTWs. Options 3, 4, and 5 were zero discharge options but involved different compliance methods with differing costs and impacts.

Option 1 consisted of end-of-pipe treatment for all wastewaters through the Universal Treatment System (UTS) and discharge to POTWs. Option 1 was rejected because it did not include pollution prevention, did not incorporate the best available technology available and because the Agency would be unable to control the discharge of all pollutants due to a lack of analytical methods for some active ingredients. Option 1 would require significant additional data on a large number of pollutants for which the Agency would have to establish standards and for which facilities would need to monitor. See 59 FR 17875.

Option 2 added pollution prevention by recycling wastewaters from cleaning the interiors of formulating and packaging equipment, and raw material and shipping containers into the product to recover product value in the wastewaters. Other wastewaters were still expected to be treated through the UTS and discharged to POTWs. Option 2 contained pollution prevention provisions but was rejected for the analytical and monitoring reasons stated above, as it still required numerical limitations.

Option 3 employed the same technology and pollution prevention practices as Option 2 but achieved zero discharge of all process wastewater by recycling the wastewater back to the facility after treatment through the UTS. Option 3/S', the proposed option, is a variant on Option 3 which expanded the coverage of the regulation to PAIs not covered by the Section 308 survey and exempted certain waste streams associated with specific sanitizer PAIs from the zero discharge requirement.

Option 4 incorporated the pollution prevention aspects of Options 2 and 3, but instead of treatment, added off-site disposal to an incinerator for the rest of the wastewater. Option 4 was rejected because it relied on transferring wastewater pollutants to another media and resulted in higher costs with no increased benefits.

Option 5 assumed that all wastewater would be disposed of through off-site incineration. Option 5 was rejected because it did not contain any pollution prevention provisions and for the same reasons as Option 4.

A complete discussion of the estimated compliance costs, impacts, and cost-effectiveness at proposal can be found in the *Economic Impact Analysis of Proposed Effluent Limitations Guidelines and Standards for the Pesticide Formulation, Packaging, and Repackaging Industry (EIA) and the Cost-Effectiveness Analysis Of Proposed Effluent Limitations Guidelines And Standards For The Pesticide Formulating, Packaging, And Repackaging Industry.* Both of these documents are available for review in the public docket of this rulemaking.

B. Compliance Costs

For the purposes of economic analysis, EPA re-estimated the annualized compliance costs and economic impacts for two of the regulatory options presented at proposal (Options 1 and 4) to incorporate the changes in scope discussed in this notice. EPA also estimated compliance costs and economic impacts for a new regulatory option referred to as the Zero/P2 Option. The Zero/P2 Option consists of two alternatives. When implemented, facilities would either meet zero discharge limitations, as the proposed rule required, or would be allowed a reduced discharge (P2 allowable discharge) if they met certain pollution prevention and treatment practices. The Zero/P2 Option revises both Options 2 and 3/S' presented at proposal, and incorporates them into one option, allowing industry to choose between these alternatives. The new pollution prevention alternative is different from the old Option 2 in that

the pollution prevention practices are specified and must be used for compliance and does not require numerical limitations (which could not be developed due to insufficient data). As stated in III.A. of this notice, the Agency now believes that it may also be appropriate to establish an alternate BAT and PSES limitations that allow a discharge of pollutants as long as PFPR facilities comply with certain pollution prevention practices. It also differs from the old Option 2 in that as part of the Zero/P2 Option, the Agency believes that the pollution prevention alternative can be implemented without the use of numerical limitations (see Section III.C.2). EPA did not re-estimate costs for Option 5 because it is not a viable option given that it achieves the same results as the new regulatory option and Option 4 (i.e., zero discharge) at substantially higher costs.

EPA previously estimated the total annualized compliance cost of the proposed rule at $56.1 million (1988) (which equals $67.4 million in 1995). EPA is using 1988 dollars because it is the base year for the survey data that was collected and because costs were presented in 1988 dollars in the proposal. As shown in Table 1, total annualized compliance costs (including amortized capital costs and operating and maintenance costs) equal $32.7 (1988) million ($39.4 million in 1995) for the Zero/P2 Option. In choosing between the two components of the Zero/P2 Option, industry is expected to choose the lower cost compliance alternative for each facility. For some facilities, particularly those with low volumes of wastewater, achieving zero discharge will be the less expensive alternative (even when they comply by contract hauling wastewaters for off-site incineration); for most facilities, achieving the P2 allowable discharge by complying with pollution prevention practices and treatment of certain waste streams is less expensive. The cost estimate for the Zero/P2 Option selects the least costly alternative for each facility.

As discussed in the proposed rule (59 FR 17896), EPA expanded the scope of the rule to account for facilities that formulate PAIs other than those PAIs covered by the 1988 survey questionnaire. In the proposal, EPA referred to these additional PAIs as the ''non 272'' PAIs. Several of the non-272 PAIs are being considered for exemption from the final rule (see Section II. A of this notice). Consistent with the methodology used at proposal, EPA assumed that facilities using only non-272 PAIs have the same average compliance costs, percent of impacted facilities, and average pollutant removals as facilities covered by the survey.

C. Economic Impacts

EPA re-estimated the economic impacts resulting from the compliance costs using the methodology presented in the EIA for the proposed rule. EPA projected two categories of economic impacts that may result from regulation: severe impacts measured as projected facility closures, and moderate impacts measured as conversion of PFPR product lines to non-pesticide formulating, packaging and repackaging operations, or compliance costs in excess of five percent of facility revenue. Under the proposed option, EPA projected facility closures at two facilities and moderate economic impacts at 250 facilities (see Table 1). Under the new combined Zero/P2 Option, EPA projects no severe impacts and moderate impacts at 162 facilities, a substantial decrease from the proposed rule.

TABLE 1.—NATIONAL ESTIMATES OF COSTS AND IMPACTS FOR SUB-CATEGORY C PSES OPTIONS IN 1988 DOLLARS

(Assuming Zero Cost Pass-Through)

	Zero/P2 option	Proposed option 3/S'
All facilities:		
# of Facilities Projected to Incur Costs	651	869
Total Annualized Compliance Costs (million dollars) [1]	$32.7	$56.1
Facility Closures: (Severe Economic Impacts)	0	2
Moderate Economic Impacts	162	250

[1] Total annualized compliance costs are in $1988 and therefore differ from the costs used in the cost-effectiveness section below.

D. Cost-Effectiveness

Cost-effectiveness analysis is used in the effluent guidelines process to compare the efficiency of one regulatory option in removing pollutants to another regulatory option, and to compare the regulation with other promulgated regulations. Cost-effectiveness is defined as the incremental annual cost of a pollution control option in an industry or industry subcategory per incremental pollutant removal. The increments considered are relative to another option or benchmark such as existing treatment. The cost-effectiveness value, therefore, represents the marginal cost of removing the next pound of pollutant.

For this cost-effective analysis, the costs were annualized using a social discount rate of seven percent. To facilitate comparison among rules promulgated in different years, cost-effectiveness values are always reported in 1981 dollars. Pollutant removals are measured in copper-based toxic ''pounds-equivalent''. This adjustment accounts for differences in toxicity among the regulated pollutants. (Note that the analysis presented here is not strictly comparable with that presented at proposal because the toxic weighting factor used for pyrethrin has decreased significantly since proposal as a result of a new calculation method.)

Table 2 presents the total annualized costs, total pounds, total pounds-equivalent of pollutants removed, and average cost per pound removed for the three options (Options 1, Zero/P2, and 4). Table 3 presents the incremental cost-effectiveness for the three options.

TABLE 2.—NATIONAL ESTIMATE OF ANNUALIZED COSTS AND REMOVALS UNDER PSES[1] SUBCATEGORY C FACILITIES

Options	Annualized cost, MM$ (1981 dollars)	Pound removals[3]	Pound equivalent removals[3]	Average cost/pound removed
Zero/P2[2]	$26.1	266,336	29,832,701	$0.87
1[4]	44.9	269,181	29,943,443	1.50
4	383.3	269,738	29,973,224	12.79

[1] These removals are not strictly comparable with those presented in the cost-effectiveness at proposal as the toxic weighting factor used to calculate pound equivalent removals for Pyrethrin has decreased significantly since proposal.

[2] EPA is considering giving industry the choice of complying with zero discharge or the pollution prevention alternative which allows a reduced discharge. This choice was proposed by industry. Option Zero/P2 combines revised Options 2 and 3/S' into a single option of choice.

[3] The removal numbers presented here are not precise. All options have virtually identical removals ($2.7x10^5$ pounds and $3.0x10^7$ lb-eq). The precision with which we can estimate the removals is not precise enough to accurately differentiate such small differences. The Zero/P2 Option is the least costly alternative and removes approximately the same number of pounds as the other Options.

[4] Option 1 requires numerical limitations. EPA did not set numerical limitations and standards in the proposed regulation (59 FR 17875) because of the lack of data such as the long term monitoring data necessary to set numerical limitations, lack of analytical methods for testing for many of the PAIs in wastewater, and the large annual cost that would be associated with compliance monitoring for all PAIs that a PFPR facility may use in production over a years time. The revised Option 1 costs presented here underestimate the true costs associated with Option 1 because they only include monitoring costs associated with the original 272 PAIs. They do not include monitoring costs associated with the Non-272 PAIs, because analytical methods have not currently been identified for all of them.

TABLE 3.—NATIONAL ESTIMATE OF INDUSTRY COST EFFECTIVENESS UNDER PSES[1] ALL SUBCATEGORY C FACILITIES

Option	Incremental costs	Incremental lb-eq removed[3]	Cost-effectiveness in $/lb-eq
Least cost alternative zero or P2[2]	26.1	29,832,701	$0.87
1[4]	18.9	110,742	170.22
4	$338.3	29,781	11,361

[1] Dollar values are in constant 1981 dollars. These removals are not strictly comparable with those presented in the cost-effectiveness at proposal as the toxic weighting factor used to calculate pound equivalent removals for Pyrethrin has decreased significantly since proposal.

[2] EPA is considering giving industry the choice of complying with zero discharge or the pollution prevention alternative which allows a reduced discharge. This choice was proposed by industry. Option Zero/P2 combines revised Options 2 and 3/S' into a single option of choice.

[3] The cost effectiveness numbers presented here are for illustrative purposes only. All options have virtually identical removals ($2.7x10^5$ lbs. and $3.0x10^7$ lb-eq). The precision with which we can estimate the removals is not precise enough to differentiate such small differences. EPA has determined that the Zero/P2 alternative is the least costly, and thus the most cost-effective.

[4] Option 1 requires numerical limitations. EPA did not set numerical limitations and standards in the proposed regulation (59 FR 17875) because of the lack of data such as the long term monitoring data necessary to set numerical limitations, lack of analytical methods for testing for many of the PAIs in wastewater, and the large annual cost that would be associated with compliance monitoring for all PAIs that a PFPR facility may use in production over a years time. The revised Option 1 costs presented here underestimate the true costs associated with Option 1 because they only include monitoring costs associated with the original 272 PAIs. They do not include monitoring costs associated with the Non-272 PAIs, because analytical methods have not currently been identified for all of them.

VI. Unfunded Mandates Reform Act

Under section 202 of the Unfunded Mandates Reform Act of 1995 (the Act), P.L. 104–4, which was signed into law on March 22, 1995, EPA generally must prepare a written statement for rules with Federal mandates that may result in estimated costs to State, local, and tribal governments in the aggregate, or to the private sector, of $100 million or more in any one year. When such a statement is required for EPA rules, under section 205 of the Act EPA must identify and consider alternatives, including the least costly, most cost-effective or least burdensome alternative that achieves the objectives of the rule. EPA must select that alternative, unless the Administrator explains in the final rule why it was not selected or it is inconsistent with law. Before EPA establishes regulatory requirements that may significantly or uniquely affect small governments, including tribal governments, it must develop under section 203 of the Act a small government agency plan. The plan must provide for notifying potentially affected small governments, giving them meaningful and timely input in the development of EPA regulatory proposals with significant Federal intergovernmental mandates, and informing, educating, and advising them on compliance with the regulatory requirements.

EPA has determined that the alternative Zero/P2 Option discussed in this notice does not include a Federal mandate that may result in estimated costs of $100 million or more to State, local, or tribal governments in the aggregate, or to the private sector, in any one year. EPA has estimated that the annual costs of the Zero/P2 Option to the private sector to be $32.7 million in 1988 dollars or $39.4 million in 1995). Although EPA has not empirically estimated the annual costs to States, local, or tribal governments resulting from implementation of the Zero/P2 Option, the Agency expects the annualized costs to be much less than those which the private sector, i.e., the PFPR facilities will face. States, local, or tribal governments will face the costs of issuing NPDES permits or conducting inspections of facilities; however, EPA does not expect these costs to produce any significant increase to the costs that these entities incur by issuing an NPDES permit or discharge agreement prior to the promulgation of the effluent limitations or pretreatment standards. EPA solicits comment on this estimate.

As to section 203 of the Act, EPA has determined that the Zero/P2 Option discussed in this notice will not significantly or uniquely affect small governments, including tribal governments. EPA recognizes that small governments may own or operate POTWs that receive wastewater from PFPR facilities subject to the pretreatment standards contained in this notice, including the Zero/P2 Option. Thus, there may be certain small governments which receive notices of intent from PFPR facilities that choose to avail themselves of the P2 alternative. These same small governments will

need to enforce the pretreatment standards through compliance mechanisms, including inspections. However, these mandates are already contained in the existing general Pretreatment Standards, which include requirements for an approved POTW pretreatment program. 40 CFR 403.8. Thus, EPA believes that any mandates resulting from this notice are not significant or unique.

EPA has, however, sought meaningful and timely input from the private sector, states, and local governments on the development of this notice. After receiving comment on the pollution prevention alternative, EPA met with members of private sector who requested that such meetings be held to discuss this alternative. EPA shared a draft version of the pollution prevention alternative with the Effluent Guidelines Task Force, the members of which include industry, environmental groups, state governments, and owner/operators of POTWs. EPA officials also presented the pollution prevention alternative at a conference held by the Association of Metropolitan Sewerage Agencies, which includes representatives from, primarily, large and medium municipal sewer authorities (POTWs) from across the United States. EPA also plans to distribute this **Federal Register** notice to several smaller POTWs which service different small communities throughout the United States in an attempt to seek timely and meaningful input from small governments. Thus, EPA expects that any applicable requirements of section 203 of the Act will have been satisfied prior to promulgating a final rule.

VII. Solicitation of Comment

In addition to those areas where EPA specifically requested comment throughout this notice, EPA solicits comment in the following areas:

- Research and development (R&D) facilities—EPA has received comment from stand alone R&D facilities that develop new formulations and perform efficacy and field testing on these new formulations. These facilities requested exemption from the PFPR effluent guidelines for several reasons. First, the majority of wastewater that is generated at these facilities is due to operation of a greenhouse or residue laboratory. EPA notes that even if these facilities are included in the final regulation, these wastewaters should not be considered process wastewater associated with pesticide formulating, packaging and repackaging operations.

Second, the remainder of wastewater is generated by the operation of a quality control (QC) laboratory or by cleaning the pilot scale formulating equipment. Both of these wastewater sources would have been considered PFPR process wastewaters under the proposed rule. However, as discussed in today's notice, EPA is considering whether to exempt laboratory equipment rinsates from cleaning analytical equipment from the definition of PFPR process wastewater. In the case of rinsate generated from cleaning the experimental formulation equipment, commenters stated that they could not meet the proposed regulation of zero discharge based on reuse. Since these facilities do not produce the same pesticides again once they have completed testing, they do not have the same ability to reuse water as a typical PFPR facility. EPA is soliciting comment and additional information on whether stand alone R&D facilities that perform PFPR operations should be exempted from the PFPR effluent guidelines rule. EPA is not considering exempting wastewaters generated by R&D activities at PFPR facilities.

- Stand alone direct discharging PFPR facilities—EPA requests comment on allowing stand alone direct discharging PFPR facilities (i.e., PFPR facilities that do not perform pesticide manufacturing operations) to have the option of complying with the pollution prevention alternative. [Note: During the development of the proposed regulation, EPA estimated that there were only two direct discharging PFPR stand alone facilities (one of which was both an indirect and a direct discharger).] Based on available data, EPA does not believe that stand alone PFPR facilities have the necessary treatment in place to discharge directly to the nation's waters; therefore, Appendix B does not include BAT and NSPS limitations for PFPR stand alone direct discharging facilities.

Triple rinse and the pollution prevention allowable discharge—EPA solicits comment and data on concentrations of pollutants (PAIs and other pollutants) found in the second and third rinses of a triple rinse from cleaning equipment interiors or raw material drums. In discussions with industry, EPA was asked whether the second or third rinses of a triple rinse could be considered a P2 allowable discharge for the purposes of the pollution prevention alternative. Under the pollution prevention alternative, as it is presented today, these rinses would have to be reused because EPA believes that these subsequent rinses contain pollutant loadings which are at high enough levels to be reused. However, if sufficient data is available, EPA may reconsider specifying reuse of these rinses and allow discharge (possibly only after treatment) in the final regulation. [Note to commenters providing data: please indicate if data represents concentrations in second or third rinses and if from drum rinsing, interior equipment rinsing, minibulk or bulk tank rinsing.]

Burden to permitting authorities (NPDES and Pretreatment)—EPA solicits comment from POTWs and NPDES permit writers on the burden to them associated with both the variations of the pollution prevention alternative and on the different implementation approaches. EPA believes the burden for either of the variations of the P2 alternative and for implementation by self-certification is no larger than what is associated with the proposed zero discharge limitation as on-site inspections would still be the expected method of demonstrating compliance. EPA notes that implementation by self-certification of the pollution prevention alternative does not require analytical testing on the part of the permitting authority. However, EPA solicits comment, including estimates of burden, on whether there would be a substantial additional burden associated with increased use of guidance (versus the use of all practices being specified in the regulatory text). In addition, EPA solicits estimates of the burden associated with requiring submittal of paperwork for approval to the permitting authority (NPDES and/or pretreatment authority).

The following four appendices (A–D) are the appendices which are referred to in this Supplemental Notice.

Appendix A.—Pesticide Active Ingredients Considered for Exemption

TABLE 1.—PAIS THAT ARE SANITIZER CHEMICALS

Shaughnessey code	PAI code	Chemical name [1]	Previously proposed as sanitizer PAI [2]
000101		Glycolic acid	
004206		Rosin amine D	
009601		Oxalic acid	
045901		Hydrogen chloride	
046607		Heptadecyl hydroxyethylimidazolinium chloride	
046621		Alkyl*-1-benzyl-1-(2-hydroxyethyl)-2-imidazolinium chloride	✔
046914		PVP iodine	
046915		Octylphenoxypolyethoxyethanol—iodine complex	
046923		Tetraglycine hydroperiodide	
046925		Alkyl*-omega-hydroxy-poly(oxyethylene)poly(oxypropylene)-iod.	
046926		Polyethylene glycol ether of linear secondary alcohol—iodi	
059804	051	Oxine-sulfate	✔
062201		o-Benzyl-p-chlorophenol	
062212		Chloro-2-biphenylol, sodium salt	
062215		Chloro-4-biphenylol, sodium salt	
063604		Potassium peroxymonosulfate	
064103	211	Phenylphenol	
064210		Trichlorophenol	
069104		Alkyl* dimethyl benzyl ammonium chloride *(60%C14, 30%C16, 5	✔
069105	056	Alkyl dimethyl benzyl ammonium chloride (Hyamine 3500)	✔
069106		Alkyl* dimethyl benzyl ammonium chloride *(50%C12, 30%C14, 1	✔
069107		Benzyl dimethyl tetradecyl ammonium chloride	
069108		Benzyl hexadecyl dimethyl ammonium chloride	
069110		Alkyl* dimethyl 3,4-dichlorobenzyl ammonium chloride *(50%C1.	
069111		Alkyl* dimethyl ethylbenzyl ammonium chloride *(50%C12, 30%C	✔
069112		Alkyl* dimethyl 1-naphthylmethyl ammonium chloride *(98%C12,	✔
069119		Dialkyl* methyl benzyl ammonium chloride *(60% C14, 30% C16,	✔
069122	105	Benzethonium Chloride (Hyamine 1622)	✔
069125		Dodecylbenzyl trimethyl ammonium chloride	✔
069129	162	Hyamine 2389 (Methyl dodecylbenzyltrimethyl ammonium chlorid	✔
069134	159	Methylbenzethonium chloride	✔
069136		Dialkyl* dimethyl ammonium chloride *(47%C12, 18%C14, 10%C18	
069137		Alkyl* dimethyl benzyl ammonium chloride *(60%C14, 25%C12, 1	✔
069138		Dialkyl* dimethyl ammonium chloride *(as in fatty acids of c	
069140		Alkyl* dimethyl benzyl ammonium chloride *(61% C12, 23% C14,	✔
069141		Alkyl* dimethyl benzyl ammonium chloride *(58%C14, 28%C16, 1	✔
069143		Alkyl* dimethyl benzyl ammonium chloride *(67%C12, 24%C14, 9	
069144		Alkyl* dimethyl 3,4-dichlorobenzyl ammonium chloride *(61%C1	
069145		Alkyl* dimethyl 3,4-dichlorobenzyl ammonium chloride *(90%C1	✔
069149		Didecyl dimethyl ammonium chloride	✔
06951		Alkyl* trimethyl ammonium chloride *(90%C18, 10%C16)	
069154		Alkyl* dimethyl ethylbenzyl ammonium chloride *(68%C12, 32%C	✔
069156		Cetyl dimethyl ethyl ammonium bromide	
069157		Alkyl* dimethyl benzyl ammonium chloride *(65%C12, 25%C14, 1	
069158		Alkyl* dimethyl benzyl ammonium chloride *(93%C14, 4%C12, 3%	
069162		Dialkyl* dimethyl ammonium chloride *(85% C18, 15% C16)	
069165		Octyl decyl dimethyl ammonium chloride	✔
069166		Dioctyl dimethyl ammonium chloride	✔
069167		Alkyl* dimethyl ethylbenzyl ammonium chloride *(60%C14, 30%C	
069173		Oxydiethylenebis(alkyl* dimethyl ammonium chloride) *(as in	✔
069175		Alkyl* dimethyl benzyl ammonium chloride *(67%C12, 25%C14, 7	
069177		Dialkyl* dimethyl ammonium chloride *(50% C12, 30% C14, 20%	
069184		Alkyl* dimethyl benzyl ammonium chloride *(95%C14, 3%C12, 2%	
069189		Alkyl* dimethyl benzyl ammonium chloride *(61% C12, 23% C14,	
069192		Alkyl* dimethyl benzyl ammonium chloride *(70% C12, 30% C14)	
069194		Alkyl* dimethyl benzyl ammonium chloride *(90% C14, 5% C12,	✔
073201		Sodium bisulfate	
076001		Phosphoric acid	
078101		Sulfamic acid	
079005		Ethoxylated nonylphenol	
081406		Mono(trichloro)tetra(monopotassium dichloro))penta-s-triazin	
099001	036	2-(Hydroxymethyl) amino ethanol (HAE)	✔
104001		Hydroxymethyl)amino)-2-methyl-1-propanol	
107601		Alkoxy*-2-hydroxypropyl trimethyl ammonium chloride *(100% C	
124201		Chlorinated trisodium phosphate	
128875		Isobornyl acetate	
128919		Octanoic acid	

TABLE 1.—PAIS THAT ARE SANITIZER CHEMICALS—Continued

Shaughnessey code	PAI code	Chemical name [1]	Previously proposed as sanitizer PAI [2]
128928		Alkyl* dimethyl benzyl ammonium chloride *(67%C12, 25%C14, 7	
128955		Capric acid	
169101		Alkyl* dimethyl 3,4-dichlorobenzyl ammonium chloride *(50%C1	
169105		Alkyl* dodecylbenzyl dimethyl ammonium chloride *(70% C12, 3	
169108		Alkyl* dimethyl benzyl ammonium chloride *(as in fatty acids	
169124		Alkyl* trimethyl ammonium chloride *(70% C12, 30% C14)	
169128		Alkyl* bis(2-hydroxyethyl)benzyl ammonium chloride *(57%C10,	
169131		Alkyl* amino betaine *(46%C12, 24%C14, 10%C16, 8%C10, 7%C8,.	
PAIs That Are Inert When Used With Sanitizer PAIs			
001501		Ethyl alcohol	
004205		Ethylenediamine	
009603		Ammonium oxalate	
011102		Borax	
011601		Ethanolamine	
013905		Sodium chloride	
016001		Carbon	
028002		Dimethyl phthalate	
039101		Ethylenediaminetetraacetic acid	
039107		Tetrasodium ethylenediaminetetraacetate	✔
039110		Ethylenediaminetetraacetic acid, trisodium salt	
039113		Tripotassium ethylenediaminetetraacetate	
039115		Disodium ethylenediaminetetraacetate	
039122		Sodium dihydroxyethylglycine	
044008		Sodium diacetate	
044101		Acetone	
046903		Nonylphenoxypolyethoxyethanol—iodine complex	
047501		Isopropanol	
051601		Menthol	
068604		Dipropylene glycol	
072604		Sodium metasilicate	
073504		Potassium carbonate	
073506		Sodium carbonate	✔
073507		Sodium sesquicarbonate	
076403		Sodium phosphate ($Na_2H(PO_4)$)	
076404		Sodium tripolyphosphate	
076406		Trisodium phosphate	
076409		Monosodium phosphate	
076601		Methyl salicylate	
079007		Polyoxyethylene sorbitol, mixed ether ester	
079011		Sodium lauryl sulfate	
079019		Sodium xylenesulfonate	
079020		Triethanolamine dodecylbenzenesulfonate	
079022		Potassium myristate	
079023		Potassium ricinoleate	
079046		Triethanolamine lauryl sulfate	
079058		Toluene sulfonic acid	
079701		Limonene	
081201		Trichloroethane	
085501		Undecylenic acid	
086802		Xylene	
098002		Dodecylbenzenesulfonic acid.	

[1] Shaughnessey codes and chemical names are taken directly from the FATES database. Several chemical names are truncated because the chemical names listed in the FATES database are limited to 60 characters.

[2] Two chemicals previously proposed as sanitizer PAIs, essential oils (Code 40501) and pine oil (Code 67002), are included on the PAI Mixtures table.

TABLE 2.— PAIS THAT ARE POOL CHEMICALS

Shaughnessey code	Chemical name
006315	1-Bromo-3-chloro-5,5-dimethylhydantoin.
014701	Calcium hypochlorite.
014702	Lithium hypochlorite.
014703	Bleach (or Sodium hypochlorite.
081401	Dichloro-s-triazinetrione.
081403	Potassium dichloro-s-triazinetrione.
081404	Sodium dichloro-s-triazinetrione.
081405	Trichloro-s-triazinetrione.
081407	Sodium dichloroisocyanurate dihydrate.

TABLE 3.—PAIS THAT ARE MICROORGANISMS

Shaughnessey code	Chemical name [1]
006401	Bacillus thuringiensis subsp. israelensis.
006402	Bacillus thuringiensis subsp. kurstaki.
006405	Bacillus thuringiensis subsp. tenebrionis.
006422	Bacillus thuringiensis subsp. kurstaki strain EG 2424.
006423	Bacillus thuringiensis subsp. kurstaki strain EG2371.
006424	Bacillus thuringiensis subsp. kurstaki strain EG2348.
006426	Bacillus thuringiensis subsp. aizawai strain GC–91.
006440	Pseudomonas fluorescens EG–1053 (previously coded 006418).
054501	Bacillus popilliae and B. lentimorbus.

TABLE 3.—PAIS THAT ARE MICROORGANISMS—Continued

Shaughnessey code	Chemical name [1]
111301	Phytophthora palmivora, chlamydospores of.
114201	Agrobacterium radiobacter.
128902	Trichoderma polysporum (ATCC 20475).
128903	Trichoderma harzianum (ATCC 20476).
128946	Bacillus thuringiensis subsp. San Diego.
129000	Gliocladium virens G–21.
129069	Streptomyces griseoviridis.
129084	Lagenidium giganteum, mycelium or oospores.
226300	Colletotrichum gloeosporioides spores.

[1] Shaughnessey codes and chemical names are taken directly from the FATES database. Several chemical names are truncated because the chemical names listed in the FATES database are limited to 60 characters.

TABLE 4.—PAIS THAT ARE MIXTURES

Shaughnessey code	Chemical name[1,2]	Mixtures That are reserved
000611	Dried blood	✔
002201	Sabadilla alkaloids	✔
004301	Oil of anise	
006501	Aromatic petroleum derivative solvent	✔
006602	Heavy aromatic naphtha	✔
010801	Bone oil	
021901	Oil of citronella	
022003	Coal tar	✔
025001	Coal tar neutral oils	✔
025003	Creosote oil (Note: Derived from any source)	✔
025004	Coal tar creosote	✔
031601	Lanolin	
031602	Cottonseed oil	
031605	Soybean oil	
031607	Ethoxylated lanolin	
031801	Ammonium salts of C8–18 and C18' fatty acids	✔
040501	Essential oils	
040502	Oil of lemongrass	
040503	Oil of eucalyptus	
040505	Cedarwood oil	
040509	Oil of Pennyroyal	
040517	Oil of orange	
040519	Oils, rue	
055601	BNOA	✔
056704	Tobacco dust	
063501	Kerosene	✔
063502	Mineral oil—includes paraffin oil from 063503	✔
063503	Petroleum distillate, oils, solvent, or hydrocarbons; also p	✔
063506	Mineral spirits	✔
067002	Pine oil	
067003	Terpineols (unspec.)	✔
067205	Pine tar oil	✔
067207	Ester gum	✔
067209	Canadian balsam	
067302	Amines, N-coco alkyltrimethylenedi-, acetates	✔
069152	Amines, coco alkyl, hydrochlorides	✔
070801	Red Squill glycoside	✔
071004	Cube Resins other than rotenone	✔
071501	Ryania speciosa, powdered stems of	✔
079009	Soap.	
079014	Turkey red oil	✔
079021	Potassium salts of fatty acids	✔
079029	Fatty alcohols (52–61% C10, 39–46% C8, 0–3% C6, 0–3% C12)	✔

TABLE 4.—PAIS THAT ARE MIXTURES—Continued

Shaughnessey code	Chemical name[1,2]	Mixtures That are reserved
079034	Methyl esters of fatty acids (100% C8–C12)	✔
079059	Fatty alcohols (54.5% C10, 45.1% C8, 0.4% C6)	✔
086803	Xylene range aromatic solvent	✔
105101	Putrescent whole egg solids	
107302	Polyhedral inclusion bodies of Douglas fir tussock moth nucl	✔
107303	Polyhedral inclusion bodies of gypsy moth nucleopolyhedrosis	✔
107304	Polyhedral inclusion bodies of n. sertifer	✔
116902	Gibberellin A4 mixt. with Gibberellin A7	✔
117001	Nosema locustae	✔
128827	Garlic oil	
128888	Lactofen (ANSI)	✔
128892	Mint Herbs	
128893	Rosemary Herbs	
128894	Thyme Herbs	
128895	Clove, Crushed	
129029	Bergamot Oil	✔
129083	Sawdust	
224600	Diethanolamides of the fatty acids of coconut oil (coded 079)	✔
505200	Isoparaffinic hydrocarbons	✔

[1] Shaughnessey codes and chemical names are taken directly from the FATES database. Several chemical names are truncated because the chemical names listed in the FATES database are limited to 60 characters.
[2] Two chemicals previously proposed as sanitizer PAIs, essential oils (Code 40501) and pine oil (Code 67002), are included on this table.

Appendix B.—Sample Regulatory Text Considered for the Final Rule

General Definitions

(g) Sanitizer Products means pesticide products that (1) contain the sanitizer active ingredients listed in Table 8 of the proposed regulation and no other active ingredient; or (2) pesticide products that are intended to disinfect or sanitize, reducing or mitigating growth or development of microbiological organisms including bacteria, fungi or viruses on surfaces on surfaces or inanimate objects in the household and or institutional environment, as provided in the directions for use on the product label. The only institutional antimicrobial products which are included by this definition are those with formulations similar to the household sanitizer products in their active ingredients and relative concentrations.

(h) Repackaging Establishment means an establishment where the activity of repackaging agricultural pesticide product into refillable containers occurs, whose primary business is wholesale or retail sales and where no pesticide manufacturing, formulating, or packaging occurs.

(i) Interior Cleaning Wastewater Sources means wastewater that is generated from cleaning or rinsing the interior of pesticide formulating, packaging or repackaging equipment, or from cleaning or rinsing the interior of raw materials containers, shipping containers or bulk storage tanks.

(j) Pool Chemicals means the pesticide active ingredients that are listed in Table 2, Appendix A of this notice as pool chemicals.

(k) Microorganisms means registered pesticide active ingredients that are biological agents listed in 40 CFR 150.20 (a)(3) including Eucaryotes (protozoa, algae and fungi), Procaryotes (bacteria) and Viruses and/or are listed in Table 3, Appendix A of this notice.

(l) Mixtures means the pesticide active ingredients listed in Table 4, Appendix A of this notice.

Subcategory C—PFPR and PFPR/Manufacturers

Applicability; Description of the Pesticide Chemicals Formulating, Packaging and Repackaging Subcategory

(a) The provisions of this subpart are applicable to discharges resulting from all pesticide formulating, packaging and repackaging operations except as provided in paragraphs (b), (c) and (d) of this section.

(b) The provisions of this subpart do not apply to repackaging of agricultural pesticides performed at repackaging establishments, as defined in the General Definitions Section. (See Subpart E for provisions that apply to repackaging establishments.)

(c) The provisions of this subpart do not apply to wastewater discharges from the operation of employee showers and laundry facilities; testing fire protection equipment, safety shower and eye washes; storm water; DOT aerosol leak test bath water from a non-continuous overflow bath (batch bath) where from the time of the last water change-out no leaks have been detected or where cans have not burst; and on-site laboratory wastewaters from cleaning analytical equipment. [This does not exclude the retain batch sample being tested or the water used to clean the container used to bring this sample into the laboratory.]

(d) The provisions of this subpart do not apply to wastewater discharges from the formulation, packaging and or repackaging of sanitizer products, pool chemicals, microorganisms and mixtures, as defined under General Definitions.

Specialized Definitions for Subcategory C

For Indirect Dischargers

Pollution prevention allowable discharge (excluding interior wastewaters, leak/spill cleanup water and floor wash) means: the quantity of/concentrations in PFPR process wastewaters that remain after a facility has demonstrated that it is using the specified practices of the Pollution Prevention Alternative as listed.

Pollution prevention allowable discharge for interior wastewaters, leak/spill cleanup water, and floor wash means: the quantity of/concentrations in PFPR process wastewaters that remain after a facility has demonstrated that it is using the specified practices of the Pollution Prevention Alternative as listed and that have been pretreated using appropriate pollution control technologies which can be used individually or in conjunction with one another as listed in Appendix C, or an

equivalent system to achieve a sufficient level of pollutant reduction. Facilities must demonstrate that the appropriate pollution control technology is properly maintained and operated.

For Direct Dischargers

Pollution prevention allowable discharge (for PFPR/Manufacturers) means: the quantity of/concentrations in all PFPR process wastewaters that remain after a facility has demonstrated that it is using the specified practices of the Pollution Prevention Alternative as listed and that have been treated using appropriate pollution control technologies which can be used individually or in conjunction with Manufacturer's treatment systems or one another as listed in Appendix C, or an equivalent system to achieve a sufficient level of pollutant reduction. Facilities must demonstrate that the appropriate pollution control technology is properly maintained and operated.

The following provisions apply to existing and new indirect discharge PFPR and PFPR/Manufacturers:

Pretreatment Standards for Existing Sources (PSES) for Subcategory C

(a) Except as provided in paragraph (b) of this section, any existing source subject to this subpart which introduces pollutants into a publicly owned treatment works must comply with 40 CFR part 403 and achieve the pretreatment standards for existing sources as follows: There shall be no discharge of process wastewater pollutants.

(b) Any pesticides formulating, packaging and repackaging facility may use the Pollution Prevention Alternative when it demonstrates that it has met the requirements of the Pollution Prevention Alternative listed on Table B–1 and Table B–2 (or received a modification for requirements on Table B–2) and has notified the pretreatment authority of their intent and has made a written statement of certification to be kept on-site concerning these practices and has kept any necessary paperwork on-site and readily available for pretreatment authorities. This paperwork shall: (1) Describe the facility specific practices which are to be practiced as part of the Pollution Prevention Alternative; (2) describe any justification allowing modification to practices listed on Table B–2; (3) include a written discussion demonstrating that the treatment system being used contains the appropriate treatment technologies for removing PAIs; (4) establish a method for demonstrating to the pretreatment authority that the treatment system is well operated and maintained; and (5) include a discussion of the rationale for choosing the method of demonstration. Any wastewater from the formulating, packaging and repackaging of pesticides at any existing facility which has been described in this paragraph and which introduces pollutants into a publicly owned treatment works must comply with 40 CFR part 403 and achieve the pretreatment standards for existing sources as follows: There shall be allowed a pollution prevention allowable discharge of wastewater pollutants, as defined in the Specialized Definition Section.

Pretreatment Standards for New Sources (PSNS) for Subcategory C

(a) Except as provided in paragraph (b) of this section, any new source subject to this subpart which introduces pollutants into a publicly owned treatment works must comply with 40 CFR part 403 and achieve the pretreatment standards for new sources as follows: There shall be no discharge of process wastewater pollutants.

(b) Any new pesticides formulating, packaging and repackaging facility may use the Pollution Prevention Alternative when it demonstrates that it has met the requirements of the Pollution Prevention Alternative listed on Table B–1 and Table B–2 (or received a modification for requirements on Table B–2) and has notified the pretreatment authority of their intent and has made a written statement of certification to be kept on-site concerning these practices and has kept any necessary paperwork on-site and readily available for pretreatment authorities. This paperwork shall: (1) describe the facility specific practices which are to be practiced as part of the Pollution Prevention Alternative; (2) describe any justification allowing modification to practices listed on Table B–2; (3) include a written discussion demonstrating that the treatment system being used contains the appropriate treatment technologies for removing PAIs; (4) establish a method for demonstrating to the pretreatment authority that the treatment system is well operated and maintained; and (5) include a discussion of the rationale for choosing the method of demonstration. Any wastewater from the formulating, packaging and repackaging of pesticides at any new facility which has been described in this paragraph and which introduces pollutants into a publicly owned treatment works must comply with 40 CFR part 403 and achieve the pretreatment standards for new sources as follows: There shall be allowed a pollution prevention allowable discharge of wastewater pollutants, as defined in the Specialized Definitions Section.

The following provisions apply to existing and new direct discharge PFPR/Manufacturers only:

Effluent Limitations Guidelines Representing the Degree of Effluent Reduction Attainable by the Application of the Best Available Technology Economically Achievable (BAT) for Subcategory C

(a) Except as provided in 40 CFR 125.30 through 125.32, and as provided in paragraph (b) of this section, any existing point source subject to this subpart which must achieve effluent limitations representing the degree of effluent reduction attainable by the application of the best available technology economically achievable: There shall be no discharge of process wastewater pollutants.

(b) Any existing pesticides formulating, packaging and repackaging facility may use the Pollution Prevention Alternative when it demonstrates that it has met the requirements of the Pollution Prevention Alternative listed on Table B–1 and Table B–2 (or received a modification for requirements on Table B–2) and has notified their NPDES permit writer at renewal or modification of their permit and has kept any necessary paperwork on-site and readily available for the permitting authority. This paperwork shall: (1) Describe the facility specific practices which are to be practiced as part of the Pollution Prevention Alternative; (2) describe any justification allowing modification to practices listed on Table B–2; (3) include a written discussion demonstrating that the treatment system being used contains the appropriate treatment technologies for removing PAIs; (4) establish a method for demonstrating to the pretreatment authority that the treatment system is well operated and maintained; and (5) include a discussion of the rationale for choosing the method of demonstration. Any existing source must achieve effluent limitations representing the degree of effluent reduction attainable by the application of the best available technology economically achievable: There shall be allowed a pollution prevention allowable discharge of wastewater pollutants, as defined in the Specialized Definition Section.

New Source Performance Standards (NSPS) for Subcategory C

(a) Any new source, except as provided in paragraph (b) of this section, subject to this subpart which discharges process wastewater must meet the following standards: There shall be no discharge of process wastewater.

(b) Any new pesticides formulating, packaging and repackaging facility may use the Pollution Prevention Alternative when it demonstrates that it has met the requirements of the Pollution Prevention Alternative listed on Table B–1 and Table B–2 (or received a modification for requirements on Table B–2) and has notified the NPDES permit writer through the application process and has kept any necessary paperwork on-site and readily available for permitting authorities. This paperwork shall: (1) Describe the facility specific practices which are to be practiced as part of the Pollution Prevention Alternative; (2) describe any justification allowing modification to practices listed on Table B–2; (3) include a written discussion demonstrating that the treatment system being used contains the appropriate treatment technologies for removing PAIs; (4) establish a method for demonstrating to the pretreatment authority that the treatment system is well operated and maintained; and (5) include a discussion of the rationale for choosing the method of demonstration. Any wastewater from the formulating, packaging and repackaging of pesticides at any new facility which has been described in this paragraph which discharges process wastewater must meet the following standards: There shall be allowed a pollution prevention allowable discharge of wastewater pollutants, as defined in the Specialized Definition Section.

Subcategory E—Repackaging of Agricultural Pesticides Performed by Repackaging Establishments

Applicability; Description of the Repackaging Establishment Subcategory

(a) The provisions of this subpart are applicable to discharges resulting from all repackaging of agricultural pesticide products into refillable containers that occurs at repackaging establishments, as defined in the General Definitions Section except as provided in paragraphs (b), and (c) of this section.

(b) The provisions of this subpart do not apply to wastewater discharges from the operation of employee showers and laundry facilities; and testing of fire protection equipment, safety showers and eye washes.

(c) The provisions of this subpart do not apply to wastewater discharges from the repackaging of microorganisms, as defined under General Definitions.

TABLE B–1.—LIST OF POLLUTION PREVENTION ALTERNATIVE PRACTICES

1. Must use spray nozzles on hoses used for rinsing (or other flow reduction devices).
2. Must practice good housekeeping:
   (1) perform preventative maintenance on all valves and fittings and repair leaky valves and fittings in a timely manner;
   (2) use drip pans under leaky valves/fittings, collect for reuse when possible; and
   (3) perform quick cleanup of leaks and spills in outdoor bulk storage or process areas.
3. When performing drum rinsing (of liquid PAI or inert) for formulation of water-based products ➧
   Must reuse the drum/shipping container rinsate DIRECTLY into the formulation at the time of formulation, store for use in next formulation or use staged drum rinsing station (counter current rinsing).
4. If all interior rinsate cannot be reused for a reason listed in Table B–2, # 5, ➧
   Must dedicate some equipment in at least one of the ways listed below.
   Dedicate to:
   (a) frequently produced product (i.e., top production product);
   (b) hard to clean products (i.e., viscous, sticky, colored products)
   (c) product families
   (d) a portion of the formulating/packaging equipment (i.e., just the mix tank or just the agitator)
5. Must sweep or vacuum dry production areas prior to rinsing with water.
6. If operating air pollution control wet scrubbers must operate as recirculating scrubbers (periodic blowdown is allowed as needed).
7. If operating continuous overflow Department of Transportation (DOT) aerosol leak test baths must operate with some recirculation.

Note:
(1) After following the practices above, some wastewaters may require treatment prior to discharge to POTWs. See definition of pollution prevention allowable discharge.
(2) After following the practices above, all wastewaters require treatment prior to discharge directly to the nation's waters. See definition of pollution prevention allowable discharge.

TABLE B–2.—LIST FOR POLLUTION PREVENTION ALTERNATIVE—OTHER PRACTICES

[May be modified with acceptable justification]

A modification to the list of practices on this table that an individual facility must comply with to be eligible for the pollution prevention alternative is allowed with acceptable justification. A modification, for purposes of this table, means that a facility would no longer have to perform a listed practice or would need to comply with a modified practice. However, the modification only applies to the specific practice for which the modification has been justified and to no other listed practices. Facilities are required to thoroughly discuss all modifications in the ''necessary'' paperwork as described above in the limitations and standards.

1. When performing drum rinsing (of liquid PAI or inert) for formulation of solvent-based products ——➧
   Must reuse the drum/shipping container rinsate (solvent) DIRECTLY into the formulation at the time of formulation or store for use in next formulation.
   [Modification allowed when: drums are going to a drum refurbisher/recycler and they will only accept drums rinsed with water.]
2. Must use low volume/high pressure rinsing equipment for rinsing PFPR equipment interiors when rinsing with water.
   [Modification allowed when: rinsing narrow transfer lines or piping where sufficient rinsing is better achieved by flushing with water.]
3. Must use a floor scrubbing machine to clean floors in liquid production areas.
   [Modification allowed when: facility has uneven floor surfaces or crowded areas where floor scrubber cannot fit, BUT must then use a mop and bucket.]
4. Must dedicate PFPR production equipment by water-based versus solvent-based products.
   [Modification allowed when: facility can provide evidence, such as production information, of infrequent/very intermittent formulation of one or the other or facility has installed and is using a solvent recovery system.]
5. Must store the rinsate from interior rinsing for future formulation of SAME or compatible product.
   [Modification allowed when:
   (a) evidence of biological growth or other product deterioration over typical storage period;
   (b) space limitations, BUT must still store rinsates for most frequently produced products;
   (c) manufacturer (or formulator contracting for toll formulating) has directed otherwise (i.e., send back to them or send for off-site disposal); or
   (d) facility is dropping registration or production of formulation at the facility after present campaign;
   (e) facility only performs packaging of the pesticide product from which interior rinsate is generated.]

Note:
(1) After following the practices above, some wastewaters may require treatment prior to discharge to POTWs. See definition of pollution prevention allowable discharge.
(2) After following the practices above, all wastewaters require treatment prior to discharge directly to the nation's waters. See definition of pollution prevention allowable discharge.

Appendix C—List of PAI Specific Treatment Technologies

This Appendix C contains those pollutant control technologies, such as hydrolysis, chemical oxidation, metals precipitation and activated carbon adsorption, which have been used for estimating compliance costs on a PAI specific basis. In general, these treatment technologies have been determined to be effective in treating pesticide containing wastewaters in literature, in bench or pilot scale treatability studies or in the Pesticide Manufacturing effluent guidelines.[1] These are the same technologies that were presented as part of the Universal Treatment System at the time of proposal. However, these technologies are PAI specific and may need to be used in conjunction with one another to provide treatment for all PAIs used at a facility over a period of time. In addition, facilities may experience difficulties treating wastewaters that contain emulsions, therefore, ''appropriate'' treatment for emulsified wastewaters must include an emulsion breaking step. [Note: EPA has costed facilities for these types of dynamic treatment needs.]

TABLE C–1.—TABLE OF TREATABILITY INFORMATION FOR THE 272 PAIS AND THE NON-272 PAIS LISTED IN THE 1988 FATES DATABASE [1]

PAI name [2]	PAI code [3]	Shaughnessy code [4]	PAI classification [5]	Structural group [5]	Treatment technology bases for cost [6]	Inert [7]
Dicofol	001	10501		DDT	Hydrolysis	
Maleic Hydrazide	002	51501		Hydrazide	Activated Carbon	
EDB	003	42002		EDB	Activated Carbon	
Vancide TH	004	82901		s-Triazine	Activated Carbon	
1,3–Dichloropropene	005	29001		EDB	Hydrolysis	
Thenarsazine Oxide	006	12601		Organoarsenic	Precipitation	
Dowicil 75	007	17901		NR4	Activated Carbon	
Triadimefon	008	109901		s-Triazine	Activated Carbon	
Hexachlorophene	009	44901		Chlorophene	Activated Carbon	
Tetrachlorophene	010			Chlorophene	Activated Carbon	
Dichlorophene	011	55001		Chlorophene	Activated Carbon	
Dichlorvos	012	84001		Phosphate	Hydrolysis	
Landrin-2	013			Carbamate	Activated Carbon	
2,3,6–T, S&E or Fenac	014	82605		2,4-D	Activated Carbon	
2,4,5-T and 2,4,5-T, S&E.	015	*		2,4-D	Activated Carbon	
2,4-D (2,4-D, S&E)	016	*		2,4-D	Chemical Oxidation	
2,4-DB, S&E	017	*		2,4-D	Activated Carbon	
Dyrene or Anilazine	018	80811		s-Triazine	Activated Carbon	
Dinocap	019	36001		Phenylcrotonate	Activated Carbon	
Dichloran or DCNA	020	31301		Aryl Halide	Activated Carbon	
Busan 90	021	8707		Miscellaneous	Activated Carbon	
Mevinphos	022	15801		Phosphate	Hydrolysis	
Sulfallate	023			Dithiocarbamate	Activated Carbon	
Chlorfenvinphos	024	84101		Phosphate	Activated Carbon	
Cyanazine or Bladex	025	100101		s-Triazine	Activated Carbon	
Propachlor	026	19101		Acetanilide	Activated Carbon	
MCPA, S&E	027	*		2,4-D	Activated Carbon	
Octhilinone	028	99901		Heterocyclic	Activated Carbon	
Pindone	029	67703		Miscellaneous	Activated Carbon	
Dichlorprop, S&E	030	*		2,4-D	Activated Carbon	
MCPP, S&E or Mecoprop.	031	*		2,4-D	Activated Carbon	
Thiabendazole	032	60101		Heterocyclic	Activated Carbon	
Belclene 310	033	80815		s-Triazine	Activated Carbon	
Chlorprop, S&E	034	21202		2,4-D	Activated Carbon	
Busan 72 or TCMTB	035	35603		Heterocyclic	Hydrolysis	
Chlorophacinone	037	67707		Miscellaneous	Activated Carbon	
Landrin-1	038			Carbamate	Activated Carbon	
Pronamide	039	101701		Chlorobenzamide	Activated Carbon	
Methiocarb or Mesurol	040	100501		Carbamate	Hydrolysis	
Propanil	041	28201		Chloropropionanilide	Activated Carbon	
Polyphase	042	107801		Carbamate	Activated Carbon	
Coumafuryl or Fumarin	043	86001		Coumarin	Activated Carbon	
DNOC	044			Phenol	Activated Carbon	
Metribuzin	045	101101		Triazathione	Activated Carbon	
CPA, S&E	046	*		2,4-D	Activated Carbon	
MCPB, S&E	047	19202		2,4-D	Activated Carbon	
Aminocarb	048			Carbamate	Hydrolysis	
Etridiazole	049	84701		Heterocyclic	Activated Carbon	
Ethoxyquin	050	55501		Quinolin	Activated Carbon	
Acephate or Orthene	052	103301		Phosphoroamidothioate	Activated Carbon	

[1] EPA is still determining the appropriate treatment technologies for a number of inorganic pesticide chemicals. Activated carbon (AC) adsorption was only used to provide a conservative cost estimate. Therefore, listed technologies for such PAIs are subject to change for final promulgation.

TABLE C–1.—TABLE OF TREATABILITY INFORMATION FOR THE 272 PAIS AND THE NON-272 PAIS LISTED IN THE 1988 FATES DATABASE [1]—Continued

PAI name [2]	PAI code [3]	Shaughnessy code [4]	PAI classification [5]	Structural group [5]	Treatment technology bases for cost [6]	Inert [7]
Acifluorfen	053	114402		Benzoic Acid	Activated Carbon	
Alachlor	054	90501		Acetanilide	Activated Carbon	
Aldicarb	055	98301		Carbamate	Hydrolysis	
Allethrin	057	*		Pyrethrin	Activated Carbon	
Ametryn	058	80801		s-Triazine	Activated Carbon	
Amitraz	059	106201		Iminamide	Activated Carbon	
Atrazine	060	80803		s-Triazine	Hydrolysis	
Bendiocarb	061	105201		Carbamate	Hydrolysis	
Benomyl	062	99101		Carbamate	Hydrolysis	
BHC	063			Lindane	Hydrolysis	
Benzyl Benzoate	064	9501		Ester	Activated Carbon	
Lethane 60	065			Thiocyanate	Activated Carbon	
Bifenox	066	104301		Nitrobenzoate	Activated Carbon	
Biphenyl	067	17002		Aryl	Activated Carbon	
Bromacil (Lithium Salt)	068	*		Uracil	Activated Carbon	
Bromoxynil	069	*		Benzonitrile	Activated Carbon	
Butachlor	070			Acetanilide	Activated Carbon	
Giv-gard	071	101401		Miscellaneous	Activated Carbon	
Cacodylic Acid	072	*		Organoarsenic	Precipitation	
Captafol	073			Phthalimide	Hydrolysis	
Captan	074	81301		Phthalimide	Hydrolysis	
Carbaryl	075	56801		Carbamate	Hydrolysis	
Carbofuran	076	90601		Carbamate	Hydrolysis	
Carbosulfan	077			Carbamate	Activated Carbon	
Chloramben	078	*		Benzoic Acid	Activated Carbon	
Chlordane	079	58201		Tricyclic	Activated Carbon	
Chloroneb	080	27301		Aryl Halide	Chemical Oxidation	
Chloropicrin	081	81501		Alkyl Halide	Chemical Oxidation	
Chlorothalonil	082	81901		Chloropropionanilide	Activated Carbon	
Chloroxuron	083			Urea	Activated Carbon	
Stirofos	084	83701		Phosphate	Hydrolysis	
Chlorpyrifos Methyl	085	59102		Phosphorothioate	Hydrolysis	
Chlorpyrifos	086	59101		Phosphorothioate	Chemical Oxidation	
Mancozeb	087	14504		Dithiocarbamate	Activated Carbon	
Bioquin (Copper)	088	24002		Organocopper	Precipitation	
Copper EDTA	089	39105		Organocopper	Precipitation	
Pydrin or Fenvalerate	090	109301		Pyrethrin	Activated Carbon	
Cycloheximide	091			Cyclic Ketone	Activated Carbon	
Dalapon	092	*		Alkyl Halide	Activated Carbon	
Dienochlor	093	27501		HCp	Activated Carbon	
Demeton	094			Phosphorothioate	Hydrolysis	
Desmedipham	095	104801		Carbamate	Hydrolysis	
Amobam	096			Miscellaneous	Activated Carbon	
DBCP	097			EDB	Activated Carbon	
Dicamba	098	*		Aryl Halide	Activated Carbon	
Dichlone	099	29601		Quinone	Activated Carbon	
Thiophanate Ethyl	100	103401		Carbamate	Hydrolysis	
Perthane	101			DDT	Activated Carbon	
EXD	102			Dithiocarbamate	Activated Carbon	
Diazinon	103	57801		Phosphorothioate	Hydrolysis	
Diflubenzuron	104	108201		Urea	Activated Carbon	
Dimethoate	106	35001		Phosphorodithioate	Hydrolysis	
Parathion Methyl	107	53501		Phosphorothioate	Hydrolysis	
Dicrotophos	108	35201		Phosphate	Activated Carbon	
Crotoxyphos	109	58801		Phosphate	Activated Carbon	
DCPA	110	78701		Aryl Halide	Activated Carbon	
Trichlorofon	111	57901		Phosphonate	Activated Carbon	
Dinoseb	112	37505		Phenol	Activated Carbon	
Dioxathion	113	37801		Phosphorodithioate	Hydrolysis	
Diphacinone	114	67701		Indandione	Activated Carbon	
Diphenamide	115	36601		Acetamide	Activated Carbon	
Diphenylamine	116	38501		Aryl Amine	Activated Carbon	
MGK 326	117	47201		Ester	Activated Carbon	
Nabonate	118	63301		Isocyanate	Chemical Oxidation	
Diuron	119	35505		Urea	Activated Carbon	
Metasol DGH	120	44303		NR4	Activated Carbon	
Dodine	121	44301		NR4	Activated Carbon	
Endosulfan	122	79401		Tricyclic	Activated Carbon	
Endothall (Endothall S&E).	123	*		Bicyclic	Activated Carbon	

TABLE C–1.—TABLE OF TREATABILITY INFORMATION FOR THE 272 PAIS AND THE NON-272 PAIS LISTED IN THE 1988 FATES DATABASE [1]—Continued

PAI name [2]	PAI code [3]	Shaughnessy code [4]	PAI classification [5]	Structural group [5]	Treatment technology bases for cost [6]	Inert [7]
Endrin	124	41601		Tricyclic	Activated Carbon	
Ethalfluralin	125	113101		Toluidine	Activated Carbon	
Ethion	126	58401		Phosphorodithioate	Hydrolysis	
Ethoprop	127	41101		Phosphorodithioate	Activated Carbon	
Fenamiphos	128	100601		Phosphoroamidate	Activated Carbon	
Chlorobenzilate	129	28801		Aryl Halide	Activated Carbon	
Butylate	130	41405		Thiocarbamate	Activated Carbon	
Famphur	131			Phosphorothioate	Hydrolysis	
Fenarimol	132	206600		Pyrimidine	Activated Carbon	
Fenthion or Baytex	133	53301		Phosphorothioate	Hydrolysis	
Ferbam	134	34801		Dithiocarbamate	Activated Carbon	
Fluometuron	135	35503		Urea	Activated Carbon	
Fluoroacetamide	136			Acetamide	Activated Carbon	
Folpet	137	81601		Phthalimide	Hydrolysis	
Glyphosate (Glyphosate S&E).	138	*		Phosphoroamidate	Chemical Oxidation	
Glyphosine	139			Phosphoroamidate	Activated Carbon	
Heptachlor	140	44801		Tricyclic	Activated Carbon	
Cycloprate	141			Thiocarbamate	Activated Carbon	
Hexazinone	142	107201		s-Triazine	Activated Carbon	
Isofenphos	143	109401		Phosphoroa midothioate	Activated Carbon	
Isopropalin	144	100201		Toluidine	Activated Carbon	
Propham	145			Carbamate	Hydrolysis	
Karabutilate	146	97401		Carbamate	Hydrolysis	
Lindane	147	9001		Lindane	Activated Carbon	
Linuron	148	35506		Urea	Chemical Oxidation	
Malachite Green	149	39504		NR4	Activated Carbon	
Malathion	150	57701		Phosphorodithioate	Hydrolysis	
Maneb	151	14505		Dithiocarbamate	Activated Carbon	
Manam	152			Dithiocarbamate	Activated Carbon	
Mefluidide	153	114002		Carbamate	Activated Carbon	
Methamidophos	154	101201		Phosphoroamidothioate	Activated Carbon	
Methidathion	155	100301		Phosphorodithioate	Activated Carbon	
Methomyl	156	90301		Carbamate	Hydrolysis	
Methoprene	157	*		Ester	Activated Carbon	
Methoxychlor	158	34001		DDT	Hydrolysis	
Methyl Bromide	160	53201		Alkyl Halide	Activated Carbon	
Monosodium Methyl Arsenate.	161	*		Organoarsenic	Precipitation	
Nalco D–2303	163	68102		Thiocyanate	Activated Carbon	
Quinomethionate	164	54101		Miscellaneous	Activated Carbon	
Metolachlor	165	108801		Acetanilide	Activated Carbon	
Mexacarbate	166			Carbamate	Hydrolysis	
Metiram	167	14601		Dithiocarbamate	Activated Carbon	
Monuron TCA	168	35502		Urea	Activated Carbon	
Monuron	169	35501		Urea	Activated Carbon	
Napropamide	170	103001		Carbamate	Activated Carbon	
Deet	171	80301		Toluamide	Activated Carbon	
Nabam	172	14503		Dithiocarbamate	Chemical Oxidation	
Naled	173	34401		Phosphate	Hydrolysis.	
Norea	174			Urea	Activated Carbon	
Norflurazon	175	105801		Heterocyclic	Activated Carbon	
Naptalam or Neptalam	176	30703		Phthalamide	Activated Carbon	
MGK 264	177	57001		Bicyclic	Activated Carbon	
Benfluralin	178	84301		Toluidine	Activated Carbon	
Sulfotepp	179	79501		Phosphorothioate	Activated Carbon	
Aspon	180			Phosphorothioate	Activated Carbon	
Coumaphos	181	36501		Phosphorothioate	Hydrolysis	
Fensulfothion	182	32701		Phosphorothioate	Hydrolysis	
Disulfoton	183	32501		Phosphorodithioate	Hydrolysis	
Fenitrothion	184	105901		Phosphorothioate	Hydrolysis	
Phosmet	185	59201		Phosphorodithioate	Hydrolysis	
Azinphos Methyl (Guthion).	186	58001		Phosphorodithioate	Hydrolysis	
Oxydemeton Methyl	187	58702		Phosphorothioate	Activated Carbon	
Organo-Arsenic Pesticides.	188			Organoarsenic	Precipitation	
Organo-Cadmium Pesticides.	189			Organocadmium	Precipitation	

TABLE C–1.—TABLE OF TREATABILITY INFORMATION FOR THE 272 PAIS AND THE NON-272 PAIS LISTED IN THE 1988 FATES DATABASE [1]—Continued

PAI name [2]	PAI code [3]	Shaughnessy code [4]	PAI classification [5]	Structural group [5]	Treatment technology bases for cost [6]	Inert [7]
Organo-Copper Pesticides.	190	*		Organocopper	Precipitation	
Organo-Mercury Pesticides.	191	*		Organomercury	Precipitation	
Organo-Tin Pesticides	192	*		Organotin	Precipitation	
o-Dichlorobenzene	193	59401		Aryl Halide	Activated Carbon	
Oryzalin	194	104201		Sulfanilamide	Activated Carbon	
Oxamyl	195	103801		Carbamate	Hydrolysis	
Oxyfluorfen	196	111601		Miscellaneous	Activated Carbon	
Bolstar	197	111501		Phosphorodithioate	Activated Carbon	
Sulprofos Oxon	198			Phosphorothioate	Hydrolysis	
Santox (EPN)	199	41801		Phosphorodithioate	Hydrolysis	
Fonofos	200	41701		Phosphorodithioate	Hydrolysis	
Propoxur	201	47802		Carbamate	Hydrolysis	
p-Dichlorobenzene	202	61501		Aryl Halide	Activated Carbon	
Parathion Ethyl	203	57501		Phosphorothioate	Hydrolysis	
Pendimethalin	204	108501		Benzeneamine	Activated Carbon	
PCNB	205	56502		Aryl Halide	Activated Carbon	
PCP or Penta	206	*		Phenol	Activated Carbon	
Perfluidone	207			Sulfonamide	Activated Carbon	
Permethrin	208	109701		Pyrethrin	Activated Carbon	
Phenmedipham	209	98701		Carbamate	Hydrolysis	
Nemazine	210	64501		Heterocyclic	Activated Carbon	
Phorate	212	57201		Phosphorodithioate	Hydrolysis	
Phosalone	213	97701		Phosphorodithioate	Hydrolysis	
Phosphamidon	214	18201		Phosphate	Hydrolysis	
Picloram	215	*		Pyridine	Activated Carbon	
Piperonyl Butoxide	216	67501		Ester	Activated Carbon	
PBED or WSCP (Busan 77).	217	69183		NR4	Activated Carbon	
Busan 85 or Arylane	218	34803		Dithiocarbamate	Chemical Oxidation	
Busan 40	219	102901		Dithiocarbamate	Chemical Oxidation	
KN Methyl	220	39002		Dithiocarbamate	Chemical Oxidation	
Metasol J26	221	101301		Miscellaneous	Activated Carbon	
Profenofos	222	111401		Phosphorothioate	Activated Carbon	
Prometon or Caparol	223	80804		s-Triazine	Chemical Oxidation	
Prometryn	224	80805		s-Triazine	Activated Carbon	
Propargite	225	97601		Miscellaneous	Activated Carbon	
Propazine	226	80808		s-Triazine	Activated Carbon	
Propionic Acid	227	77702		Alkyl Acid	Activated Carbon	
Previcur N	228	119301		Carbamate	Hydrolysis	
Pyrethrin Coils	229	69004		Pyrethrin	Activated Carbon	
Pyrethrum I	230	69001		Pyrethrin	Hydrolysis	
Pyrethrum II	231	69002		Pyrethrin	Hydrolysis	
Pyrethrins	232	*		Pyrethrin	Hydrolysis	
Resmethrin	233	*		Pyrethrin	Activated Carbon	
Fenchlorphos or Ronnel	234	58301		Phosphorothioate	Hydrolysis	
Mexide or Rotenone	235	71003		Miscellaneous	Activated Carbon	
DEF	236	74801		Phosphorotrithioate	Activated Carbon	
Siduron or Tupersan	237	35509		Urea	Activated Carbon	
Silvex	238	*		2,4-D	Activated Carbon	
Simazine	239	80807		s-Triazine	Activated Carbon	
Sodium Bentazon	240	103901		Heterocyclic	Chemical Oxidation	
Carbam-S or Sodam	241	34804		Dithiocarbamate	Chemical Oxidation	
Sodium Fluoroacetate	242	75003		Acetamide	Activated Carbon	
Vapam or Metham Sodium.	243	39003		Dithiocarbamate	Chemical Oxidation	
Sulfoxide	244	57101		Miscellaneous	Activated Carbon	
Cycloate or Ro-Neet	245	41301		Thiocarbamate	Activated Carbon	
EPrecipitationC or Eptam.	246	41401		Thiocarbamate	Activated Carbon	
Molinate	247	41402		Thiocarbamate	Activated Carbon	
Pebulate or Tillman	248	41403		Thiocarbamate	Activated Carbon	
Vernolate or Vernam	249	41404		Thiocarbamate	Activated Carbon	
HPrecipitationMS	250	35604		Thiosulphonate	Activated Carbon	
Bensulide or Betesan	251	9801		Phosphorodithioate	Activated Carbon	
Tebuthiuron	252	105501		Urea	Activated Carbon	
Temephos	253	59001		Phosphorothioate	Hydrolysis	
Terbacil	254	12701		Uracil	Activated Carbon	
Terbufos or Counter	255	105001		Phosphorodithioate	Activated Carbon	

TABLE C–1.—TABLE OF TREATABILITY INFORMATION FOR THE 272 PAIS AND THE NON-272 PAIS LISTED IN THE 1988 FATES DATABASE [1]—Continued

PAI name [2]	PAI code [3]	Shaughnessy code [4]	PAI classification [5]	Structural group [5]	Treatment technology bases for cost [6]	Inert [7]
Terbuthylazine	256	80814		s-Triazine	Activated Carbon	
Terbutryn	257	80813		s-Triazine	Activated Carbon	
Tetrachlorophenol	258	63004		Phenol	Activated Carbon	
Dazomet	259	35602		Heterocyclic	Chemical Oxidation	
Thiophanate Methyl	260	102001		Carbamate	Hydrolysis	
Thiram	261	79801		Dithiocarbamate	Activated Carbon	
Toxaphene	262	80501		Bicyclic	Activated Carbon	
Merphos	263	74901		Phosphorotrithioate	Hydrolysis	
Trifluralin or Treflan	264	36101		Toluidine	Activated Carbon	
Warfarin	265	*		Coumarin	Activated Carbon	
Zinc MBT	266	51705		Organozinc	Precipitation	
Zineb	267	14506		Dithiocarbamate	Activated Carbon	
Ziram	268	34805		Dithiocarbamate	Activated Carbon	
Triallate	269	78802		Thiocarbamate	Activated Carbon	
Phenothrin	270	69005		Pyrethrin	Activated Carbon	
Tetramethrin	271	69003		Pyrethrin	Activated Carbon	
Chloropropham	272	18301		Carbamate	Hydrolysis	
Non-272 PAIs						
CFC 11		13	Non-Aromatic >100		Activated Carbon	
CFC 12		14	Non-Aromatic >100		Activated Carbon	
Gluconic acid		104	Non-Aromatic >100		Activated Carbon	
Polyethylene		152	Polymer		Activated Carbon	
Hydrogen peroxide		595	Inorganic		Activated Carbon	
Acrolein		701	Non-Aromatic <100		Activated Carbon	
Dimethyl-m-dioxan-4-ol acetate.		1001	Non-Aromatic >100		Activated Carbon	
Ethyl alcohol		1501	Non-Aromatic <100		Activated Carbon	I
Dodecyl alcohol		1509	Non-Aromatic >100		Activated Carbon	
Tetradecyl alcohol		1510	Non-Aromatic >100		Activated Carbon	
Rosin amine D acetate		4201	Non-Aromatic >100		Activated Carbon	
Ethylenediamine		4205	Non-Aromatic <100		Activated Carbon	I
Triethanolamine		4208	Non-Aromatic >100		Activated Carbon	
Dihydroabietylamine acetate.		4213	Non-Aromatic >100		Activated Carbon	
Amitrole		4401	Non-Aromatic <100		Activated Carbon	
Allyl isothiocyanate		4901	Non-Aromatic <100		Activated Carbon	
AMS		5501	Non-Aromatic >100		Activated Carbon	
Calcium sulfate		5602	Inorganic		Activated Carbon	
Tartar emetic		6201	Non-Aromatic >100		Activated Carbon	
Diphenylstibene 2-ethylhexanoate.		6202	Aromatic		Activated Carbon	
Streptomycin		6306	Non-Aromatic >100		Activated Carbon	
Oxytetracycline hydrochloride.		6308	Aromatic		Activated Carbon	
Streptomycin sesquisulfate.		6310	Aromatic		Activated Carbon	
Neomycin sulfate		6313	Aromatic		Activated Carbon	
Antimycin A		6314	Aromatic		Activated Carbon	
1,3-Dibromo-5,5-dimethylhydantoin.		6317	Non-Aromatic >100		Activated Carbon	
Calcium oxytetracycline		6321	Aromatic		Activated Carbon	
Espesol 3A		6601	Not Classified		Activated Carbon	
Arsenic acid		6801	Metallic		Precipitation	
Arsenic acid anhydride		6802	Metallic		Precipitation	
Arsenous acid anhydride		7001	Metallic		Precipitation	
Copper oxychloride		8001	Metallic		Precipitation	
Basic cupric sulfate		8101	Metallic		Precipitation	
Bromine		8701	Inorganic		Activated Carbon	
Bromophos		8706	Aromatic		Activated Carbon	
Benzyl bromoacetate		8710	Aromatic		Activated Carbon	
Benzoic acid		9101	Aromatic		Activated Carbon	
Benzyl diethyl ((2,6-xylylcarbamoyl)methyl) ammonium benzoat.		9106	Aromatic		Activated Carbon	
Benzyl alcohol		9502	Aromatic		Activated Carbon	
Ammonium oxalate		9603	Inorganic		Activated Carbon	
Ammonium oxalate		9603	Non-Aromatic >100		Activated Carbon	I
3-Chloro-p-toluidine hydrochloride.		9901	Aromatic		Activated Carbon	

TABLE C–1.—TABLE OF TREATABILITY INFORMATION FOR THE 272 PAIS AND THE NON-272 PAIS LISTED IN THE 1988 FATES DATABASE [1]—Continued

PAI name [2]	PAI code [3]	Shaughnessy code [4]	PAI classification [5]	Structural group [5]	Treatment technology bases for cost [6]	Inert [7]
Butoxyethoxy)ethyl thiocyanate.	.....	10002	Non-Aromatic >100	.....	Activated Carbon	
2-Naphthol	.....	10301	Aromatic	.....	Activated Carbon	
Boric acid	.....	11001	Inorganic	.....	Activated Carbon	
Barium metaborate	.....	11101	Inorganic	.....	Activated Carbon	
Borax	.....	11102	Inorganic	.....	Activated Carbon	I
Boron sodium oxide (B8 Na2O13), tetrahydrate (12280–03–4).	.....	11103	Inorganic	.....	Activated Carbon	
Sodium metaborate (NaBO2).	.....	11104	Inorganic	.....	Activated Carbon	
Boron sodium oxide (B8 Na2O13) (12008–41–2).	.....	11107	Inorganic	.....	Activated Carbon	
Boron sodium oxide (B4Na2O7), pentahydrate (12179–04–3).	.....	11110	Inorganic	.....	Activated Carbon	
Boron sodium oxide (B4Na2O7) (1330–43–4).	.....	11112	Inorganic	.....	Activated Carbon	
Polybutene	.....	11402	Polymer	.....	Activated Carbon	
Polyisobutylene	.....	11403	Polymer	.....	Activated Carbon	
Butyl cellosolve	.....	11501	Non-Aromatic >100	.....	Activated Carbon	
Ethanolamine	.....	11601	Non-Aromatic <100	.....	Activated Carbon	I
Butoxypolypropylene glycol.	.....	11901	Polymer	.....	Activated Carbon	
Neburon (ANSI)	.....	12001	Aromatic	.....	Activated Carbon	
Methyltrimethylenediox-y)bis(4-methyl-1,3,2-dioxaborinane).	.....	12401	Non-Aromatic >100	.....	Activated Carbon	
Oxybis(4,4,6-trimethyl-1,3,2-dioxaborinane).	.....	12402	Non-Aromatic >100	.....	Activated Carbon.	
Cadmium chloride	.....	12902	Metallic	.....	Precipitation	
Lead arsenate, basic	.....	13502	Metallic	.....	Precipitation	
Lead arsenate	.....	13503	Metallic	.....	Precipitation	
Sodium arsenate	.....	13505	Metallic	.....	Precipitation	
Sodium arsenite	.....	13603	Metallic	.....	Precipitation	
Potassium bromide	.....	13903	Inorganic	.....	Activated Carbon	
Sodium chloride	.....	13905	Inorganic	.....	Activated Carbon	I
Aluminum sulfate	.....	13906	Inorganic	.....	Activated Carbon	
Sodium bromide	.....	13907	Inorganic	.....	Activated Carbon	
Camphor	.....	15602	Non-Aromatic >100	.....	Activated Carbon	
Carbon	.....	16001	Inorganic	.....	Activated Carbon	I
Carbon disulfide	.....	16401	Inorganic	.....	Activated Carbon	
Carbon tetrachloride	.....	16501	Non-Aromatic >100	.....	Activated Carbon	
Dry Ice	.....	16601	Inorganic	.....	Activated Carbon	
Barban (ANSI)	.....	17601	Aromatic	.....	Activated Carbon	
Chloro-2-propenyl)-3, 5,7,triaza-1-azoniatricyclo (3.3.1.1(sup.	.....	17902	Non-Aromatic >100	.....	Activated Carbon	
Chlormequat chloride	.....	18101	Non-Aromatic >100	.....	Activated Carbon	
Chloromethoxypropylme-rcuric acetate.	.....	18401	Metallic	.....	Precipitation	
Allidochlor	.....	19301	Non-Aromatic >100	.....	Activated Carbon	
Chlorine	.....	20501	Inorganic	.....	Activated Carbon.	
Sodium chlorite	.....	20502	Inorganic	.....	Activated Carbon	
Chlorine dioxide	.....	20503	Inorganic	.....	Activated Carbon	
Bromine chloride	.....	20504	Inorganic	.....	Activated Carbon	
Chromic acid	.....	21101	Metallic	.....	Precipitation	
Chromic oxide	.....	21103	Metallic	.....	Precipitation	
Citric acid	.....	21801	Non-Aromatic >100	.....	Activated Carbon	
Cresol (unspec) (Cre-sylic acid).	.....	22101	Aromatic	.....	Activated Carbon	
Cresol	.....	22102	Aromatic	.....	Activated Carbon	
Copper (metallic)	.....	22501	Metallic	.....	Precipitation	
Copper ammonium car-bonate.	.....	22703	Metallic	.....	Precipitation	
Copper carbonate	.....	22901	Metallic	.....	Precipitation	

TABLE C–1.—TABLE OF TREATABILITY INFORMATION FOR THE 272 PAIS AND THE NON-272 PAIS LISTED IN THE 1988 FATES DATABASE [1]—Continued

PAI name [2]	PAI code [3]	Shaughnessy code [4]	PAI classification [5]	Structural group [5]	Treatment technology bases for cost [6]	Inert [7]
Copper hydroxide		23401	Metallic		Precipitation	
Copper chloride hydroxide (Cu2Cl(OH)3).		23501	Metallic		Precipitation	
Copper oxychloride sulfate.		23503	Metallic		Precipitation	
Copper sulfate		24401	Metallic		Precipitation	
Copper (from triethanolamine complex).		24403	Metallic		Precipitation	
Copper as metallic (in the form of chelates of copper citrat.		24405	Metallic		Precipitation	
Copper as elemental from copper—ethylenediamine complex.		24407	Metallic		Precipitation	
Copper sulfate (anhydrous).		24408	Metallic		Precipitation	
Copper(I) oxide		25601	Metallic		Precipitation	
Cuprous thiocyanate		25602	Metallic		Precipitation	
Cyclohexane		25901	Non-Aromatic <100		Activated Carbon	
Cyclohexanone		25902	Non-Aromatic <100		Activated Carbon	
Dichlobenil		27401	Aromatic		Activated Carbon	
Dimethyl phthalate		28002	Aromatic		Activated Carbon	I
Dichloro-5,5-dimethylhydantoin.		28501	Non-Aromatic >100		Activated Carbon	
Diquat dibromide		32201	Aromatic		Activated Carbon	
Dimethrin (ANSI)		34101	Non-Aromatic >100		Activated Carbon	
Dicapthon		34502	Aromatic		Activated Carbon	
Ziram, cyclohexylamine complex.		34806	Non-Aromatic >100		Activated Carbon	
Butyl dimethyl trithioper oxycarbamate.		34807	Non-Aromatic >100		Activated Carbon	
Ferric sulfate		34902	Inorganic		Activated Carbon	
Daminozide		35101	Non-Aromatic >100		Activated Carbon	
Bis(trichloro methyl) sulfone.		35601	Non-Aromatic >100		Activated Carbon	
Bis(bromoacet oxy)-2-butene.		35605	Non-Aromatic >100		Activated Carbon	
Dazomet, sodium salt		35607	Non-Aromatic >100		Activated Carbon	
Butonate		35701	Non-Aromatic >100		Activated Carbon	
Trifluoro-4-nitro-m-cresol (**) = alpha, alpha, alpha-.		36201	Aromatic		Activated Carbon	
Triethanolamine dinoseb (2-sec-Butyl-4,6-dinitrophenol).		37506	Aromatic		Activated Carbon	
Sodium 4,6-dinitro-o-cresylate.		37508	Non-Aromatic >100		Activated Carbon	
Dinitrophenol		37509	Aromatic		Activated Carbon	
Alkanol* amine dinoseb (2-sec-butyl-4,6-dinitrophenol) *(s.		37511	Aromatic		Activated Carbon	
Sodium dinoseb (2-sec-Butyl-4,6-dinitrophenol).		37512	Aromatic		Activated Carbon	
Ethylenediaminetetraacetic acid.		39101	Non-Aromatic >100		Activated Carbon	I
Ethylenediaminetetraacetic acid, sodium salt.		39103	Non-Aromatic >100		Activated Carbon	
Nitrilotriacetic acid, trisodium salt.		39106	Non-Aromatic >100		Activated Carbon	
Tetrasodium ethylenediaminetetraacetate.		39107	Non-Aromatic >100		Activated Carbon	I
Trisodium (2-hydroxyethyl) ethylenedi aminetriacetate.		39109	Non-Aromatic >100		Activated Carbon	
Ethylenediaminetetraacetic acid, trisodium salt.		39110	Non-Aromatic >100		Activated Carbon	I

TABLE C–1.—TABLE OF TREATABILITY INFORMATION FOR THE 272 PAIS AND THE NON-272 PAIS LISTED IN THE 1988 FATES DATABASE [1]—Continued

PAI name [2]	PAI code [3]	Shaughnessy code [4]	PAI classification [5]	Structural group [5]	Treatment technology bases for cost [6]	Inert [7]
Tripotassium ethyl-enediamine tetraacetate.	.....	39113	Non-Aromatic >100	.....	Activated Carbon	I
Disodium di(2-hydroxyethyl) ethyl-enediamine diacetate.	.....	39114	Non-Aromatic >100	.....	Activated Carbon	
Disodium ethylene diaminetetraacetate.	.....	39115	Non-Aromatic >100	.....	Activated Carbon	I
Ammonium ethylene diaminetetraacetate.	.....	39117	Non-Aromatic >100	.....	Activated Carbon	
Pentasodium diethyl enetriaminepentaacet-ate.	.....	39120	Non-Aromatic >100	.....	Activated Carbon	
Sodium dihydroxyethylglycine.	.....	39122	Non-Aromatic >100	.....	Activated Carbon	I
Ethyl-1,3-hexanediol	.....	41001	Non-Aromatic >100	.....	Activated Carbon	
Ethylene	.....	41901	Non-Aromatic <100	.....	Activated Carbon	
EDC	.....	42003	Non-Aromatic <100	.....	Activated Carbon	
Methylene chloride	.....	42004	Non-Aromatic <100	.....	Activated Carbon	
Methoxyethanol	.....	42202	Non-Aromatic <100	.....	Activated Carbon	
Ethylene glycol	.....	42203	Non-Aromatic <100	.....	Activated Carbon	
Butylene glycol	.....	42205	Non-Aromatic <100	.....	Activated Carbon	
Ethylene oxide	.....	42301	Non-Aromatic <100	.....	Activated Carbon	
Copper(II) oxide	.....	42401	Metallic	.....	Precipitation	
Cuprous and cupric oxide, mixed.	.....	42403	Metallic	.....	Precipitation	
Propylene oxide	.....	42501	Non-Aromatic <100	.....	Activated Carbon	
Formaldehyde	.....	43001	Non-Aromatic <100	.....	Activated Carbon	
Paraformaldehyde	.....	43002	Polymer	.....	Activated Carbon	
Bis (2-butylene) tetrahydro-2-furaldehyde.	.....	43302	Aromatic	.....	Activated Carbon	
Gibberellic acid	.....	43801	Aromatic	.....	Activated Carbon	
Potassium gibberellate	.....	43802	Non-Aromatic >100	.....	Activated Carbon	
Glutaral	.....	43901	Non-Aromatic >100	.....	Activated Carbon	
Copper citrate	.....	44005	Metallic	.....	Precipitation	
Sodium diacetate	.....	44008	Non-Aromatic >100	.....	Activated Carbon	I
Acetone	.....	44101	Non-Aromatic <100	.....	Activated Carbon	I
Methyl nonyl ketone	.....	44102	Non-Aromatic >100	.....	Activated Carbon	
Methyl-2-pentanone	.....	44105	Non-Aromatic >100	.....	Activated Carbon	
Monosodium 2, 2′-methy lenebis(3,4,6-trichlorophenate).	.....	44902	Aromatic	.....	Activated Carbon	
Potassium 2,2′-methyl-ene bis(3,4,6-tri chlorophenate).	.....	44904	Aromatic	.....	Activated Carbon	
Hexachloro epoxy octahydro-endo, exo-dimethanona phthalene 85%.	.....	45001	Non-Aromatic >100	.....	Activated Carbon	
Chlorhexidine diacetate	.....	45502	Aromatic	.....	Activated Carbon	
Chlorhexidine digluconate.	.....	45504	Aromatic	.....	Activated Carbon	
Hydrocyanic acid	.....	45801	Inorganic	.....	Activated Carbon	
Hydroxyethyl octyl sul-fide.	.....	46301	Aromatic	.....	Activated Carbon	
Heptadecenyl-2-(2-hydroxyethyl)-2-imidazolinium chloride.	.....	46608	Aromatic	.....	Activated Carbon	
Hydroxyethyl)-2-alkyl-2-imidazoline (as in fatty acids of t.	.....	46609	Aromatic	.....	Activated Carbon.	
IBA	.....	46701	Aromatic	.....	Activated Carbon	
Dihydropyrone	.....	46801	Non-Aromatic >100	.....	Activated Carbon	
Butoxy polypropoxy polyethoxyet hanol—iodine complex.	.....	46901	Polymer	.....	Activated Carbon	
Nonylp henoxypolyet hoxyethanol—iodine complex.	.....	46903	Polymer	.....	Activated Carbon	I

TABLE C–1.—TABLE OF TREATABILITY INFORMATION FOR THE 272 PAIS AND THE NON-272 PAIS LISTED IN THE 1988 FATES DATABASE [1]—Continued

PAI name [2]	PAI code [3]	Shaughnessy code [4]	PAI classification [5]	Structural group [5]	Treatment technology bases for cost [6]	Inert [7]
Polyethoxypoly propoxyet hanol—iodine complex.	.....	46904	Polymer	.....	Activated Carbon	
Iodine	.....	46905	Inorganic	.....	Activated Carbon	
Use code no. 046904	.....	46909	Polymer	.....	Activated Carbon	
Iodine—potassium iodide complex.	.....	46917	Inorganic	.....	Activated Carbon	
Alkyl-omega-hydroxypoly (oxyethy lene)—iodine complex *(100%.	.....	46921	Polymer	.....	Activated Carbon	
Isopropanol	.....	47501	Non-Aromatic <100	.....	Activated Carbon	I
Lead acetate	.....	48001	Metallic	.....	Precipitation	
Ferrous sulfate heptahydrate.	.....	50502	Inorganic	.....	Activated Carbon	
Nickel sulfate hexahydrate.	.....	50505	Metallic	.....	Precipitation	
Ferrous ammonium sulfate.	.....	50506	Inorganic	.....	Activated Carbon	
Ferrous sulfate monohydrate.	.....	50507	Inorganic	.....	Activated Carbon.	
Maleic hydrazide, diethanolamine salt.	.....	51502	Non-Aromatic >100	.....	Activated Carbon	
Maleic hydrazide, potassium salt.	.....	51503	Non-Aromatic >100	.....	Activated Carbon	
Menthol	.....	51601	Non-Aromatic >100	.....	Activated Carbon	
Sodium 2-mercapto benzothiolate.	.....	51704	Aromatic	.....	Activated Carbon	
Mercuric chloride	.....	52001	Metallic	.....	Precipitation	
Mercurous chloride	.....	52201	Metallic	.....	Precipitation	
Metaldehyde	.....	53001	Non-Aromatic >100	.....	Activated Carbon	
Methyl alcohol	.....	53801	Non-Aromatic <100	.....	Activated Carbon	
Methylated naphthalenes.	.....	54002	Aromatic	.....	Activated Carbon	
Chloro-2-(2,4-dichloro phenoxy) phenol.	.....	54901	Aromatic	.....	Activated Carbon	
Sodium 2,2′-methylenebis (4-chlorop henate).	.....	55005	Aromatic	.....	Activated Carbon	
Naphthalene	.....	55801	Aromatic	.....	Activated Carbon	
NAD	.....	56001	Aromatic	.....	Activated Carbon	
NAA (1-Naph thaleneacetic Acid).	.....	56002	Aromatic	.....	Activated Carbon	
Potassium 1-naphthale neacetate.	.....	56003	Aromatic	.....	Activated Carbon	
Ammonium 1-naphthale neacetate.	.....	56004	Aromatic	.....	Activated Carbon	
Sodium 1-naphthale neacetate.	.....	56007	Aromatic	.....	Activated Carbon	
Ethyl 1-naphthale neacetate.	.....	56008	Aromatic	.....	Activated Carbon	
Nitrophenol	.....	56301	Aromatic	.....	Activated Carbon	
Nicotine	.....	56702	Aromatic	.....	Activated Carbon	
Carbop henothion (ANSI).	.....	58102	Aromatic	.....	Activated Carbon	
Sodium 5-chloro-2-(4-chloro-2-(3-(3,4-dichlorop henyl)ureido).	.....	58802	Aromatic	.....	Activated Carbon	
Monocrotophos	.....	58901	Non-Aromatic >100	.....	Activated Carbon	
Chlordimeform	.....	59701	Aromatic	.....	Activated Carbon	
Chlordimeform hydrochloride.	.....	59702	Aromatic	.....	Activated Carbon	
Thiabendazole hypophosphite.	.....	60102	Aromatic	.....	Activated Carbon	
Hexachlorobenzene	.....	61001	Aromatic	.....	Activated Carbon	
Methyl 4-hydroxybenzoate.	.....	61201	Aromatic	.....	Activated Carbon	
Butyl paraben	.....	61205	Aromatic	.....	Activated Carbon	
Paraquat dichloride	.....	61601	Aromatic	.....	Activated Carbon	

TABLE C–1.—TABLE OF TREATABILITY INFORMATION FOR THE 272 PAIS AND THE NON-272 PAIS LISTED IN THE 1988 FATES DATABASE [1]—Continued

PAI name [2]	PAI code [3]	Shaughnessy code [4]	PAI classification [5]	Structural group [5]	Treatment technology bases for cost [6]	Inert [7]
Potassium 2-benzyl-4-chlorophenate.	.....	62202	Aromatic	.....	Activated Carbon	
Sodium 2-benzyl-4-chlorophenate.	.....	62203	Aromatic	.....	Activated Carbon	
Chloro-4-phenylphenol ..	.....	62206	Aromatic	.....	Activated Carbon	
Chloro-2-phenylphenol ..	.....	62208	Aromatic	.....	Activated Carbon	
Chloro-2-biphenylol, potassium salt.	.....	62209	Aromatic	.....	Activated Carbon	
Chloro-2-phenylphenol ..	.....	62210	Aromatic	.....	Activated Carbon	
Chloro-2-phenylphenol, potassium salt.	.....	62211	Aromatic	.....	Activated Carbon	
Peroxyacetic acid	.....	63201	Non-Aromatic <100	.....	Activated Carbon	
Sodium phenate	.....	64002	Aromatic	.....	Activated Carbon	
Amylphenol	.....	64101	Aromatic	.....	Activated Carbon	
Sodium o-phenylphenate	.....	64104	Aromatic	.....	Activated Carbon	
Phenylphenol, potassium salt.	.....	64108	Aromatic	.....	Activated Carbon	
Amylphenol, potassium salt.	.....	64111	Aromatic	.....	Activated Carbon	
Amylphenol, sodium salt	.....	64112	Aromatic	.....	Activated Carbon	
Butylphenol, sodium salt	.....	64115	Aromatic	.....	Activated Carbon	
Ammonium 2-phenylphenate.	.....	64116	Aromatic	.....	Activated Carbon	
Chloro-2-cyclopentylphenol.	.....	64202	Aromatic	.....	Activated Carbon	
Bithionolate sodium	.....	64203	Aromatic	.....	Activated Carbon	
Chloro-3-cresol	.....	64206	Aromatic	.....	Activated Carbon	
Sodium 2,4,5-trichlorophenate.	.....	64217	Aromatic	.....	Activated Carbon	
Aluminum phosphide	.....	66501	Inorganic	.....	Activated Carbon	
Phosphorus	.....	66502	Inorganic	.....	Activated Carbon	
Magnesium phosphide ..	.....	66504	Inorganic	.....	Activated Carbon	
1-(Alkyl* amino)-3-aminopropane *(Fatty acids of coconut oil).	.....	67301	Non-Aromatic >100	.....	Activated Carbon	
Alkyl* amino)-3- amino propane *(53% C12, 19% C14, 8.5% C16, 7% C8.	.....	67305	Non-Aromatic >100	.....	Activated Carbon	
Alkyl* amino)-3-aminopropane benzoate* (fatty acids of coconut.	.....	67307	Aromatic	.....	Activated Carbon	
Alkyl* dipropoxyamine *(47% C12, 18% C14, 10% C18, 9% C10, 8.	.....	67308	Non-Aromatic >100	.....	Activated Carbon	
Alkyl* amino)-3-aminopropane hydroxy acetate* (acids of coconut.	.....	67309	Non-Aromatic >100	.....	Activated Carbon	
Alkyl* amino)-3-amino propane* (42% C12, 26% C18, 15% C14, 8% C16.	.....	67310	Non-Aromatic >100	.....	Activated Carbon	
Alkyl*amino) -3-aminopropane diacetate* (fatty acids of coconu.	.....	67313	Non-Aromatic >100	.....	Activated Carbon	
Octadecenyl -1,3-propanediamine monogluconate.	.....	67316	Non-Aromatic >100	.....	Activated Carbon	
Alkyl* amine acetate *(5% C8, 7% C10, 54% C12, 19% C14, 8% C16.	.....	67329	Non-Aromatic >100	.....	Activated Carbon	
Pindone sodium salt	.....	67704	Aromatic	.....	Activated Carbon	
Diphacinone, sodium salt.	.....	67705	Aromatic	.....	Activated Carbon	

TABLE C–1.—TABLE OF TREATABILITY INFORMATION FOR THE 272 PAIS AND THE NON-272 PAIS LISTED IN THE 1988 FATES DATABASE [1]—Continued

PAI name [2]	PAI code [3]	Shaughnessy code [4]	PAI classification [5]	Structural group [5]	Treatment technology bases for cost [6]	Inert [7]
Isovaleryl-1,3-indandione, calcium salt.	.....	67706	Aromatic	.....	Activated Carbon	
Methyl isothiocyanate	.....	68103	Non-Aromatic <100	.....	Activated Carbon	
Potassium dichromate ...	.....	68302	Inorganic	.....	Activated Carbon	
Sodium chromate	.....	68303	Inorganic	.....	Activated Carbon	
Sodium dichromate	.....	68304	Metallic	.....	Precipitation	
Potassium permanganate.	.....	68501	Inorganic	.....	Activated Carbon	
Propylene glycol	.....	68603	Non-Aromatic <100	.....	Activated Carbon	
Dipropylene glycol	.....	68604	Non-Aromatic <100	.....	Activated Carbon	I
Alkenyl* dimethyl ethyl ammonium bromide* (90% C18', 10% C16').	.....	69102	Non-Aromatic >100	.....	Activated Carbon	
Alkyl*-N-ethyl morpholinium ethyl sulfate *(92% C18, 8% C16).	.....	69113	Non-Aromatic >100	.....	Activated Carbon	
Alkyl* isoquinolinium bromide *(50% C12, 30% C14, 17% C16, 3.	.....	69115	Aromatic	.....	Activated Carbon	
Alkyl* methyl isoquinolinium chloride *(55% C14, 12% C12, 17% C.	.....	69116	Aromatic	.....	Activated Carbon	
Cetyl trimethyl ammonium bromide.	.....	69117	Non-Aromatic >100	.....	Activated Carbon	
Cetyl pyridinium bromide	.....	69118	Aromatic	.....	Activated Carbon	
Dodecyl dimethyl benzyl ammonium naphthenate.	.....	69127	Aromatic	.....	Activated Carbon	
Alkyl* dimethyl ethylbenzyl ammonium cyclohexyl sulfamate *(5.	.....	69135	Aromatic	.....	Activated Carbon	
Alkyl* dimethyl ethyl ammonium bromide *(90% C14, 5% C16, 5%.	.....	69146	Aromatic	.....	Activated Carbon	
Alkyl*-N-ethyl morpholinium ethyl sulfate *(66% C18, 25% C16,.	.....	69147	Non-Aromatic >100	.....	Activated Carbon	
Alkyl* trimethyl ammonium bromide *(95% C14, 5% C16).	.....	69153	Non-Aromatic >100	.....	Activated Carbon	
Benzyl ((dodecylcarbamoyl) methyl) dimethyl ammonium chloride.	.....	69159	Aromatic	.....	Activated Carbon	
Cetyl pyridinium chloride	.....	69160	Aromatic	.....	Activated Carbon	
Alkyl* dimethyl ethyl ammonium bromide *(85% C16, 15% C18).	.....	69186	Non-Aromatic >100	.....	Activated Carbon	
Cetyl-N-ethylmorp holinium ethyl sulfate.	.....	69187	Non-Aromatic >100	.....	Activated Carbon	
Use code no. 069102 (Alkenyl* Dimethyl Ammonium bromide).	.....	69198	Non-Aromatic >100	.....	Activated Carbon	
p-Aminopyridine	.....	69201	Aromatic	.....	Activated Carbon	
Nitrapyrin (ANSI)	.....	69203	Aromatic	.....	Activated Carbon	
Alkyl pyridines	.....	69205	Aromatic	.....	Activated Carbon	
Pyrazon (ANSI)	.....	69601	Non-Aromatic >100	.....	Activated Carbon	
Capsaicin (in oleoresin of capsicum).	.....	70701	Aromatic	.....	Activated Carbon	
Ryanodine	.....	71502	Aromatic	.....	Activated Carbon	
Silver	.....	72501	Inorganic	.....	Activated Carbon	
Silver chloride	.....	72506	Inorganic	.....	Activated Carbon	
Silica gel	.....	72602	Inorganic	.....	Activated Carbon	
Sodium metasilicate	.....	72604	Inorganic	.....	Activated Carbon	

TABLE C–1.—TABLE OF TREATABILITY INFORMATION FOR THE 272 PAIS AND THE NON-272 PAIS LISTED IN THE 1988 FATES DATABASE [1]—Continued

PAI name [2]	PAI code [3]	Shaughnessy code [4]	PAI classification [5]	Structural group [5]	Treatment technology bases for cost [6]	Inert [7]
Silicon dioxide		72605	Inorganic		Activated Carbon	
Silver thiuronium acrylate co-polymer.		72701	Polymer		Activated Carbon	
Sodium chlorate		73301	Inorganic		Activated Carbon	
Potassium carbonate		73504	Inorganic		Activated Carbon	
Sodium carbonate		73506	Inorganic		Activated Carbon	
Sodium sesquicarbonate		73507	Non-Aromatic >100		Activated Carbon	
Calcium cyanide		74001	Inorganic		Activated Carbon	
Sodium cyanide		74002	Inorganic		Activated Carbon	
Cryolite		75101	Non-Aromatic >100		Activated Carbon	
Sodium fluoride		75202	Inorganic		Activated Carbon	
Ammonium fluosilicate		75301	Inorganic		Activated Carbon	
Sodium fluosilicate		75306	Inorganic		Activated Carbon	
Potassium hydroxide (K(OH)).		75602	Inorganic		Activated Carbon	
Sodium hydroxide		75603	Inorganic		Activated Carbon	
Calcium oxide		75604	Inorganic		Activated Carbon	
Potassium iodide		75701	Inorganic		Activated Carbon	
Potassium tetrathionate		75903	Non-Aromatic >100		Activated Carbon	
Potassium nitrate		76103	Inorganic		Activated Carbon	
Sodium nitrate		76104	Inorganic		Activated Carbon	
Sodium nitrite		76204	Inorganic		Activated Carbon	
Sodium phosphate (Na2H (PO4)).		76403	Inorganic		Activated Carbon	I
Sodium tripolyphosphate		76404	Polymer		Activated Carbon	I
Trisodium phosphate		76406	Inorganic		Activated Carbon	I
Monosodium phosphate		76409	Inorganic		Activated Carbon	I
Benzenesulfonamide, N-chloro-, sodium salt.		76501	Aromatic		Activated Carbon	
Methyl salicylate		76601	Aromatic		Activated Carbon	I
Salicylic acid		76602	Aromatic		Activated Carbon	
Ethoxyethyl p-methoxycinnamate.		76604	Aromatic		Activated Carbon	
Calcium polysulfide		76702	Polymer		Activated Carbon	
Strychnine		76901	Aromatic		Activated Carbon	
Strychnine sulfate		76902	Aromatic		Activated Carbon	
Trichloromelamine		77101	Aromatic		Activated Carbon	
Niclosamide		77401	Aromatic		Activated Carbon	
Dibromosalicylanilide		77402	Aromatic		Activated Carbon	
Tribromsalan		77404	Aromatic		Activated Carbon	
Dibromosalicylanilide		77405	Aromatic		Activated Carbon	
Chlorosalicylanilide		77406	Aromatic		Activated Carbon	
Sulfur		77501	Inorganic		Activated Carbon	
Sulfur dioxide7		7601	Inorganic		Activated Carbon	
Sulfaquinoxaline		7901	Aromatic		Activated Carbon	
Sulfacetamide		7904	Aromatic		Activated Carbon	
Sulfuric acid		78001	Inorganic		Activated Carbon	
Sulfuryl fluoride		78003	Non-Aromatic >100		Activated Carbon	
Sodium bisulfite		78201	Inorganic		Activated Carbon	
Tetrachloroethylene		78501	Non-Aromatic >100		Activated Carbon	
Ethoxylated isooctylphenol.		79004	Aromatic		Activated Carbon	
Polyoxyethylene sorbitol, mixed ether ester.		79007	Polymer		Activated Carbon	I
Sodium dodecylbenzene sulfonate.		79010	Aromatic		Activated Carbon	
Sodium lauryl sulfate		79011	Non-Aromatic >100		Activated Carbon	I
Lauric diethanolamide		79018	Non-Aromatic >100		Activated Carbon	
Sodium xylenesulfonate		79019	Aromatic		Activated Carbon	I
Triethanolamine dodecylbenzene sulfonate.		79020	Aromatic		Activated Carbon	I
Potassium myristate		79022	Non-Aromatic >100		Activated Carbon	I
Potassium ricinoleate		79023	Non-Aromatic >100		Activated Carbon	I
Triethanolamine oleate		79025	Non-Aromatic >100		Activated Carbon	
Dioctyl sodium sulfosuccinate.		79027	Non-Aromatic >100		Activated Carbon	
Use code no. 069179		79036	Not Classified		Activated Carbon	
Decanol		79038	Non-Aromatic >100		Activated Carbon	

TABLE C–1.—TABLE OF TREATABILITY INFORMATION FOR THE 272 PAIS AND THE NON-272 PAIS LISTED IN THE 1988 FATES DATABASE [1]—Continued

PAI name [2]	PAI code [3]	Shaughnessy code [4]	PAI classification [5]	Structural group [5]	Treatment technology bases for cost [6]	Inert [7]
Alkyl* diethanolamide *(70% C12, 30% C14).	.....	79045	Non-Aromatic >100	.....	Activated Carbon	
Triethanolamine lauryl sulfate.	.....	79046	Non-Aromatic >100	.....	Activated Carbon	I
Toluene sulfonic acid	.....	79058	Aromatic	.....	Activated Carbon	I
Sulfonated oleic acid, sodium salt.	.....	79064	Non-Aromatic >100	.....	Activated Carbon	
Tetradecyl formate	.....	79069	Non-Aromatic >100	.....	Activated Carbon	
Polyoxyethylene sorbitol oleate-laurate.	.....	79075	Polymer	.....	Activated Carbon	
Polyethoxylated stearylamine.	.....	79094	Polymer	.....	Activated Carbon	
Capric diethanolamide	.....	79099	Non-Aromatic >100	.....	Activated Carbon	
Limonene	.....	79701	Aromatic	.....	Activated Carbon	I
Calcium thiosulfate	.....	80101	Inorganic	.....	Activated Carbon	
Ammonium thiosulfate	.....	80103	Inorganic	.....	Activated Carbon	
Thymoxydi chloroacetic acid.	.....	80401	Aromatic	.....	Activated Carbon	
Thymol	.....	80402	Aromatic	.....	Activated Carbon	
Sodium trichloroacetate	.....	81001	Non-Aromatic >100	.....	Activated Carbon	
Trichloroacetic acid	.....	81002	Non-Aromatic >100	.....	Activated Carbon	
Trichloroethane	.....	81201	Non-Aromatic >100	.....	Activated Carbon	I
Use code no. 082053	.....	82072	Not Classified	.....	Activated Carbon	
Use code no. 082555	.....	82572	Not Classified	.....	Activated Carbon	
Hexahydro-1,3,5-tris(2-hydroxyethyl)-s-tri-azine.	.....	83301	Aromatic	.....	Activated Carbon	
Triethylene glycol	.....	83501	Non-Aromatic >100	.....	Activated Carbon	
2-(Hydroxymethyl)-2-nitro-1,3-propanediol.	.....	83902	Non-Aromatic >100	.....	Activated Carbon	
Bomyl	.....	84201	Non-Aromatic >100	.....	Activated Carbon	
Turpentine	.....	84501	Non-Aromatic >100	.....	Activated Carbon	
Chloro-1- (2,5-dichlorophenyl) vinyl) O,O-diethyl phosphorothi.	.....	84901	Aromatic	.....	Activated Carbon	
Undecylenic acid	.....	85501	Non-Aromatic >100	.....	Activated Carbon	I
Chloroxylenol	.....	86801	Aromatic	.....	Activated Carbon	
Xylene	.....	86802	Aromatic	.....	Activated Carbon	I
Zinc chloride	.....	87801	Metallic	.....	Precipitation	
Zinc 2-pyridinethiol-1-oxide.	.....	88002	Metallic	.....	Precipitation	
Hydroxy-2-(1H)-pyridinethione, sodium salt.	.....	88004	Aromatic	.....	Activated Carbon	
Omadine TBAO	.....	88005	Aromatic	.....	Activated Carbon	
Zinc naphthenate	.....	88301	Metallic	.....	Precipitation	
Zinc oxide	.....	88502	Metallic	.....	Precipitation	
Zinc phosphide (Zn3P2)	.....	88601	Metallic	.....	Precipitation	
Zinc phenol sulfonate	.....	89002	Metallic	.....	Precipitation	
Zinc sulfate, basic	.....	89101	Metallic	.....	Precipitation	
Dimetilan	.....	90101	Non-Aromatic >100	.....	Activated Carbon	
Carboxin	.....	90201	Non-Aromatic >100	.....	Activated Carbon	
Oxycarboxin	.....	90202	Aromatic	.....	Activated Carbon	
Benzocaine	.....	97001	Aromatic	.....	Activated Carbon	
Piperalin	.....	97003	Aromatic	.....	Activated Carbon	
Tetracaine hydrochloride	.....	97005	Aromatic	.....	Activated Carbon	
Formetanate hydro-chloride.	.....	97301	Non-Aromatic >100	.....	Activated Carbon	
Dodecyl benzene sul-fonic acid.	.....	98002	Aromatic	.....	Activated Carbon	I
Azacosterol HCl	.....	98101	Non-Aromatic >100	.....	Activated Carbon	
Use code no. 039502	.....	98401	Not Classified	.....	Activated Carbon	
Ammonium alum	.....	98501	Inorganic	.....	Activated Carbon	
Bismuth subgallate	.....	98601	Metallic	.....	Precipitation	
Chlorflurenol, methyl ester.	.....	98801	Non-Aromatic >100	.....	Activated Carbon	
Benzisothiazolin-3-one	.....	98901	Aromatic	.....	Activated Carbon	

TABLE C–1.—TABLE OF TREATABILITY INFORMATION FOR THE 272 PAIS AND THE NON-272 PAIS LISTED IN THE 1988 FATES DATABASE [1]—Continued

PAI name [2]	PAI code [3]	Shaughnessy code [4]	PAI classification [5]	Structural group [5]	Treatment technology bases for cost [6]	Inert [7]
Methyl 2-benzimidazolecarbamate phosphate.	.....	99102	Aromatic	.....	Activated Carbon	
Ethephon	.....	99801	Non-Aromatic >100	.....	Activated Carbon	
Pentanethiol	.....	100701	Non-Aromatic >100	.....	Activated Carbon	
Nitrobutyl) morpholine ...	.....	100801	Aromatic	.....	Activated Carbon	
Ethyl-2-nitrotri methylene) dimorpholine.	.....	100802	Aromatic	.....	Activated Carbon	
Tolyl diiodomethyl sulfone.	.....	101002	Aromatic	.....	Activated Carbon	
Isobutyric acid	.....	101502	Non-Aromatic <100	.....	Activated Carbon	
Dibromo-3-nitrilopropionamide.	.....	101801	Non-Aromatic >100	.....	Activated Carbon	
Polyethoxylated oleylamine.	.....	101901	Non-Aromatic >100	.....	Activated Carbon	
Dinitramine (ANSI)	.....	102301	Aromatic	.....	Activated Carbon	
Phenylethyl propionate ..	.....	102601	Aromatic	.....	Activated Carbon	
Eugenol	.....	102701	Aromatic	.....	Activated Carbon	
Tricosene	.....	103201	Non-Aromatic >100	.....	Activated Carbon	
Tricosene	.....	103202	Non-Aromatic >100	.....	Activated Carbon	
Sodium 1,4′,5′-trichloro-2′-(2,4,5-trichlorophenoxy) methanes.	.....	104101	Aromatic	.....	Activated Carbon	
Hexahydro-1,3,5-tris(2-hydroxypropyl)-s-triazine.	.....	105601	Aromatic	.....	Activated Carbon	
Methazole	.....	106001	Aromatic	.....	Activated Carbon	
Difenzoquat methyl sulfate.	.....	106401	Non-Aromatic >100	.....	Activated Carbon	
Butralin	.....	106501	Aromatic	.....	Activated Carbon	
Fosamine ammonium	.....	106701	Non-Aromatic >100	.....	Activated Carbon	
Asulam	.....	106901	Aromatic	.....	Activated Carbon	
Sodium asulam	.....	106902	Aromatic	.....	Activated Carbon	
Hydroxy methoxy methyl-1-aza-3,7-dioxabicyclo (3.3.0) octane.	.....	107001	Non-Aromatic >100	.....	Activated Carbon	
Hydroxy methyl-1-aza-3,7- dioxabicyclo (3.3.0) octane.	.....	107002	Non-Aromatic >100	.....	Activated Carbon	
Hydroxypoly (methyleneoxy)* methyl-1-aza-3,7-dioxabicyclo (3.3.	.....	107003	Non-Aromatic >100	.....	Activated Carbon	
Chloro-2-methyl-3(2H)-isothiazolone.	.....	107103	Non-Aromatic >100	.....	Activated Carbon	
Methyl-3(2H) -isothiazolone.	.....	107104	Non-Aromatic >100	.....	Activated Carbon	
Trimethoxysilyl) propyl dimethyl octadecyl ammonium chloride.	.....	107401	Non-Aromatic >100	.....	Activated Carbon	
Kinoprene	.....	107502	Non-Aromatic >100	.....	Activated Carbon	
Triforine (ANSI)	.....	107901	Non-Aromatic >100	.....	Activated Carbon	
Pirimiphos-methyl (ANSI).	.....	108102	Aromatic	.....	Activated Carbon	
Thiobencarb	.....	108401	Aromatic	.....	Activated Carbon	
Ancymidol (ANSI)	.....	108601	Aromatic	.....	Activated Carbon	
Oxadiazon (ANSI)	.....	109001	Aromatic	.....	Activated Carbon	
Mepiquat chloride	.....	109101	Non-Aromatic >100	.....	Activated Carbon	
Fluvalinate	.....	109302	Aromatic	.....	Activated Carbon	
Chloro-N-(hydroxymethyl) acetamide.	.....	109501	Non-Aromatic >100	.....	Activated Carbon	
Dikegulac sodium	.....	109601	Non-Aromatic >100	.....	Activated Carbon	
Iprodione (ANSI)	.....	109801	Aromatic	.....	Activated Carbon	
Phenylmethyl)-9-(tetrahydro -2H-pyran-2-yl) -9H-purin amine.	.....	110001	Aromatic	.....	Activated Carbon	
Prodiamine	.....	110201	Aromatic	.....	Activated Carbon	
Erioglaucine	.....	110301	Aromatic	.....	Activated Carbon	

TABLE C–1.—TABLE OF TREATABILITY INFORMATION FOR THE 272 PAIS AND THE NON-272 PAIS LISTED IN THE 1988 FATES DATABASE [1]—Continued

PAI name [2]	PAI code [3]	Shaughnessy code [4]	PAI classification [5]	Structural group [5]	Treatment technology bases for cost [6]	Inert [7]
Tartrazine		110302	Aromatic		Activated Carbon	
Dodemorph acetate		110401	Non-Aromatic >100		Activated Carbon	
Ethofumesate (ANSI)		110601	Aromatic		Activated Carbon	
Aldoxycarb (ANSI)		110801	Non-Aromatic >100		Activated Carbon	
Diclofop-methyl		110902	Aromatic		Activated Carbon	
Bromo-1-(bromomethyl)-1,3- propanedicar bonitrile.		111001	Non-Aromatic >100		Activated Carbon	
Poly (iminoimidocar bonyliminoimi docar bonyliminohexa methylene).		111801	Polymer		Activated Carbon	
Imazalil		111901	Aromatic		Activated Carbon	
Bromadiolone		112001	Aromatic		Activated Carbon	
Brodifacoum		112701	Aromatic		Activated Carbon	
Bromethalin (ANSI)		112802	Aromatic		Activated Carbon	
Fluridone (ANSI)		112900	Not Classified		Activated Carbon	
Vinclozolin		113201	Aromatic		Activated Carbon	
Metalaxyl		113501	Aromatic		Activated Carbon	
Propetamphos (ANSI)		113601	Non-Aromatic >100		Activated Carbon	
Methyl-1-naphthyl) malei mide.		113701	Aromatic		Activated Carbon	
Hexadecadien-1-yl acetate.		114101	Non-Aromatic >100		Activated Carbon	
Hexadecadien-1-yl acetate.		114102	Non-Aromatic >100		Activated Carbon	
Epoxy-2-methyloctadecane.		114301	Non-Aromatic >100		Activated Carbon	
Thiodicarb (ANSI)		114501	Non-Aromatic >100		Activated Carbon	
Dimethyloxazolidine (8CA & 9CA).		114801	Non-Aromatic >100		Activated Carbon	
Trimethyloxazolidine		114802	Non-Aromatic >100		Activated Carbon	
Hydroxy phenyl) oxoacetohy droximic chloride.		114901	Aromatic		Activated Carbon	
EEEBC		115001	Not Classified		Activated Carbon	
MDM Hydantoin		115501	Non-Aromatic >100		Activated Carbon	
DMDM Hydantoin		115502	Non-Aromatic >100		Activated Carbon	
Triclopyr (ANSI)		116001	Aromatic		Activated Carbon	
Triethylamine triclopyr		116002	Aromatic		Activated Carbon	
Butoxyethyl triclopyr		116004	Aromatic		Activated Carbon	
Decenyl) dihydro-2(3H)-furanone.		116501	Non-Aromatic >100		Activated Carbon	
Cytokinins		116801	Not Classified		Activated Carbon	
Benzyladenine		116901	Aromatic		Activated Carbon	
Clopyralid, monoethanolamine salt.		117401	Aromatic		Activated Carbon	
Clopyralid (ANSI)		117403	Aromatic		Activated Carbon	
Flucythrinate (ANSI)		118301	Aromatic		Activated Carbon	
Hydra methylnon (ANSI)		118401	Aromatic		Activated Carbon	
Chlorsulfuron		118601	Aromatic		Activated Carbon	
Dimethipin		118901	Non-Aromatic >100		Activated Carbon	
Hexadecenal		120001	Non-Aromatic >100		Activated Carbon	
Tetradecenal		120002	Non-Aromatic >100		Activated Carbon	
Thidiazuron		120301	Non-Aromatic >100		Activated Carbon	
Metronidazole		120401	Non-Aromatic >100		Activated Carbon	
Erythrosine B		120901	Aromatic		Activated Carbon	
Sethoxydim		121001	Non-Aromatic >100		Activated Carbon	
Clethodim		121011	Not Classified		Activated Carbon	
Cyromazine		121301	Aromatic		Activated Carbon	
Tralomethrin		121501	Aromatic		Activated Carbon	
Azadirachtin		121701	Non-Aromatic >100		Activated Carbon	
Tridecen-1-yl acetate		121901	Non-Aromatic >100		Activated Carbon	
Tridecen-l-yl acetate		121902	Non-Aromatic >100		Activated Carbon	
Sulfometuron methyl		122001	Aromatic		Activated Carbon	
Metsulfuron-methyl		122010	Aromatic		Activated Carbon	
Propiconazole		122101	Aromatic		Activated Carbon	
Furanone, dihydro-5-pentyl-.		122301	Non-Aromatic >100		Activated Carbon	

TABLE C–1.—TABLE OF TREATABILITY INFORMATION FOR THE 272 PAIS AND THE NON-272 PAIS LISTED IN THE 1988 FATES DATABASE [1]—Continued

PAI name [2]	PAI code [3]	Shaughnessy code [4]	PAI classification [5]	Structural group [5]	Treatment technology bases for cost [6]	Inert [7]
Furanone, 5- heptyldi hydro-.		122302	Non-Aromatic >100		Activated Carbon	
Abamectin (ANSI)		122804	Non-Aromatic >100		Activated Carbon	
Fluazifop-butyl		122805	Aromatic		Activated Carbon	
Fluazifop-R-butyl		122809	Aromatic		Activated Carbon	
Flumetralin		123001	Not Classified		Activated Carbon	
Fosetyl-Al		123301	Non-Aromatic >100		Activated Carbon	
Methanol, (((2-(dihydro-5-methyl-3(2H)-oxazolyl)-1-methyl)et.		123702	Non-Aromatic >100		Activated Carbon	
Fomesafen		123802	Not Classified		Activated Carbon	
Tridiphane		123901	Aromatic		Activated Carbon	
POE isooctadecanol		124601	Non-Aromatic >100		Activated Carbon	
Periplanone B		124801	Non-Aromatic >100		Activated Carbon	
Fenoxycarb		125301	Not Classified		Activated Carbon	
Clomazone		125401	Aromatic		Activated Carbon	
Clofentezine		125501	Aromatic		Activated Carbon	
Paclobutrazol		125601	Aromatic		Activated Carbon	
Flurprimidol		125701	Aromatic		Activated Carbon	
Isoxaben		125851	Aromatic		Activated Carbon	
Isazofos		126901	Non-Aromatic >100		Activated Carbon	
Triadimenol		127201	Aromatic		Activated Carbon	
Fenpropathrin		127901	Non-Aromatic >100		Activated Carbon	
Sulfosate		128501	Not Classified		Activated Carbon	
Fenoxaprop-ethyl		128701	Non-Aromatic >100		Activated Carbon	
Quizalofop-ethyl		128711	Aromatic		Activated Carbon	
Bensulfuron-methyl		128820	Aromatic		Activated Carbon	
Imazapyr		128821	Not Classified		Activated Carbon	
Bifenthrin		128825	Aromatic		Activated Carbon	
Dichloro-5-ethyl-5-methylhydantoin.		128826	Non-Aromatic >100		Activated Carbon	
Amazapyr, isopropylamine salt.		128829	Not Classified		Activated Carbon	
Sodium salt of 1-carboxymethyl-3,5,7-triaza-1-azoniatricyclo.		128832	Non-Aromatic >100		Activated Carbon	
Linalool		128838	Non-Aromatic >100		Activated Carbon	
Imazaquin, monoammonium salt.		128840	Aromatic		Activated Carbon	
Imazethabenz		128842	Aromatic		Activated Carbon	
Thifensulfuron methyl		128845	Not Classified		Activated Carbon	
Imazaquin		128848	Aromatic		Activated Carbon	
Myclobutanil (ANSI)		128857	Aromatic		Activated Carbon	
Zinc borate (3ZnO, 2B03, 3.5H2O; mw 434.66).		128859	Metallic		Precipitation	
Cyhalothrin		128867	Aromatic		Activated Carbon	
Potassium cresylate		128870	Aromatic		Activated Carbon	
Triflumizole		128879	Aromatic		Activated Carbon	
Tribenuron methyl		128887	Not Classified		Activated Carbon	
Cyhalothrin		128897	Aromatic		Activated Carbon	
Chlorimuron-ethyl		128901	Aromatic		Activated Carbon	
Dodecen-1-yl acetate		128906	Non-Aromatic >100		Activated Carbon	
Dodecen-1-yl acetate		128907	Non-Aromatic >100		Activated Carbon	
DDOL		128908	Non-Aromatic >100		Activated Carbon	
Farnesol		128910	Non-Aromatic >100		Activated Carbon	
Nerolidol		128911	Non-Aromatic >100		Activated Carbon	
Tefluthrin		128912	Not Classified		Activated Carbon	
Bromoxynil heptanoate		128920	Aromatic		Activated Carbon.	
Imazethapyr		128922	Not Classified		Activated Carbon	
Imazethapyr, ammonium salt.		128923	Not Classified		Activated Carbon	
Chitosan		128930	Polymer		Activated Carbon	
Nitrogen, Liquid		128934	Inorganic		Activated Carbon	
Sulfuric acid, monourea adduct.		128961	Non-Aromatic <100		Activated Carbon	
Hydroprene		128966	Non-Aromatic >100		Activated Carbon	
Triasulfuron		128969	Aromatic		Activated Carbon	
Primisulfuron-methyl		128973	Aromatic		Activated Carbon	
Uniconazole (ANSI)		128976	Aromatic		Activated Carbon	

TABLE C–1.—TABLE OF TREATABILITY INFORMATION FOR THE 272 PAIS AND THE NON-272 PAIS LISTED IN THE 1988 FATES DATABASE [1]—Continued

PAI name [2]	PAI code [3]	Shaughnessy code [4]	PAI classification [5]	Structural group [5]	Treatment technology bases for cost [6]	Inert [7]
Tetradecenyl acetate		128980	Non-Aromatic >100		Activated Carbon	
Chitin		128991	Polymer		Activated Carbon	
Sulfluramid		128992	Non-Aromatic >100		Activated Carbon	
Dithiopyr (ANSI)		128994	Not Classified		Activated Carbon	
Nicosulfuron		129008	Not Classified		Activated Carbon	
Zinc		129015	Metallic		Precipitation	
Tetradecen-1-ol, acetate, (E)-.		129019	Non-Aromatic >100		Activated Carbon	
Imazaquin, sodium salt		129023	Aromatic		Activated Carbon	
Dodecadien-1-ol		129028	Non-Aromatic >100		Activated Carbon	
Ionone		129030	Non-Aromatic >100		Activated Carbon	
Ionone		129030	Non-Aromatic >100		Activated Carbon	
Dicamba, aluminum salt		129042	Aromatic		Activated Carbon	
Benzene methanaminium, N-(2-((2,6-dimethylphenyl) amino)-2-oxo.		129045	Aromatic		Activated Carbon	
Fenoxaprop-p-Ethyl		129092	Aromatic		Activated Carbon	
Alkyl* bis(2-hydroxyethyl) ammonium acetate *(as in fatty ac.		169103	Non-Aromatic >100		Activated Carbon	
Alkenyl* dimethyl ammonium acetate *(75% C18', 25% C16').		169104	Non-Aromatic >100		Activated Carbon	
Amines, N-coco alkyltri methylenedi-, adipates.		169109	Non-Aromatic >100		Activated Carbon	
Dialkyl* dimethyl ammonium bentonite *(as in fatty acids of.		169111	Non-Aromatic >100		Activated Carbon	
Alkyl* bis(2-hydroxyethyl) amine acetate *(65% C18, 30% C16,.		169125	Non-Aromatic >100		Activated Carbon	
Dodecyl bis (hydroxyethyl) dioctyl ammonium phosphate.		169154	Non-Aromatic >100		Activated Carbon	
Dodecyl bis(2-hydroxyethyl) octyl hydrogen ammonium phosphat.		169155	Non-Aromatic >100		Activated Carbon	
Didecyl-N-methyl-3-(trimethoxysilyl) propanaminium chloride.		169160	Non-Aromatic >100		Activated Carbon	
Cholecalciferol		202901	Non-Aromatic >100		Activated Carbon	
Use code no. 202901		208700	Non-Aromatic >100		Activated Carbon	
Alkyl* N,N-bis(2-hydroxyethyl)amine *(100% C8–C18).		210900	Non-Aromatic >100		Activated Carbon	
Bromo-2-nitropropane-1,3-diol.		216400	Non-Aromatic >100		Activated Carbon	
Use code no. 114601		229300	Not Classified		Activated Carbon	
Diethatyl ethyl		279500	Non-Aromatic >100		Activated Carbon	
Hydroprene (ANSI)		486300	Non-Aromatic >100		Activated Carbon	
Zinc sulfate monohydrate.		527200	Metallic		Precipitation	
Geraniol		597501	Non-Aromatic >100		Activated Carbon	

[1] The 272 Pesticide Active Ingredients (PAIs) are listed first, by PAI code, followed by the non-272 PAIs from the 1988 FIFRA and TSCA Enforcement System (FATES) Database, which are listed in Shaughnessy code order. PAIs that were exempted or reserved from the supplemental PFPR effluent guidelines are not listed in the table.

[2] The non-272 PAI names are taken directly from the 1988 FATES database. Several of the PAI names are truncated because the PAI names listed in the FATES database are limited to 60 characters.

[3] The non-272 PAIs do not have PAI codes.

[4] All Shaughnessy codes are taken from the 1988 FATES database. Some of the 272 PAIs are not listed in the 1988 FATES database; therefore, no Shaughnessy codes are listed for these PAIs.

[5] The PAI classification and structural group are not provided for every PAI. Structural groups are provided for the 272 PAIs, and classifications are provided for the non-272 PAIs.

[6] The listed treatment technology represents the technology used as the basis for developing treatment costs for wastewaters containing the PAI. The analysis of treatment technologies has not been completed for all PAIs, therefore some non-272 PAIs were costed for activated carbon as a temporary treatment technology to give a conservatively high cost estimate.

[7] PAIs with an ''I'' in this column are considered to be active ingredients only when used on combination with other active ingredients listed in this table.

*This PAI code represents a category or group of PAIs; therefore, it has multiple Shaughnessy codes.

Appendix D—List of Acronyms

AC	Activated Carbon.
BAT	Best Available Technology Economically Achievable.
BCT	TBest Conventional Pollutant Control Technology.
BPT	Best Practicable Control Technology Currently Available.
CSF	Confidential Statement of Formula.
DOT	Department of Transportation.
FATES	FIFRA and TSCA Enforcement System.
FDA	Food and Drug Administration.
FIFRA	Federal Insecticide, Fungicide, and Rodenticide Act.
GRAS	Generally Regarded as Safe.
NOI	Notice of Intent.
NPDES	National Pollutant Discharge Elimination System.
NSPS	New Source Performance Standards.
PAIs	Pesticide Active Ingredients.
PFPR	Pesticide Formulating, Packaging, and Repackaging.
POTWs	Publicly Owned Treatment Works.
PSES	Pretreatment Standards for Existing Sources.
PSNS	Pretreatment Standards for New Sources.
QC	Quality Control
R&D	Research and Development.
RCRA	Resource Conservation and Recovery Act.
SIC	Standard Industrial Classification.
TSCA	Toxic Substances Control Act.
UTS	Universal Treatment System.

Dated: May 24, 1995.

Robert Perciasepe,

Assistant Administrator for Water.

[FR Doc. 95–13541 Filed 6–7–95; 8:45 am]

BILLING CODE 6560–50–P

DEPARTMENT OF ENERGY

48 CFR Chapter 9

Acquisition Regulation; Regulatory Reduction

AGENCY: Department of Energy.

ACTION: Notice of proposed rulemaking.

SUMMARY: The Department of Energy (DOE) proposes to amend the Department of Energy Acquisition Regulation (DEAR) in its continuing effort to achieve the goals of several Executive Orders (EO), including: EO 12861, Elimination of One-Half of Executive Branch Internal Regulations; EO 12931, Federal Procurement Reform; and EO 12866, Regulatory Planning and Review. This proposed rule would delete existing regulatory material that has been determined to be unnecessary. Specific material to be deleted from the DEAR is summarized in the ''Section-by-Section Analysis'' appearing later in this document.

DATES: Written comments should be forwarded no later than August 7, 1995.

ADDRESSES: Send written comments to Kevin M. Smith, Procurement Policy Division (HR–51), Department of Energy, 1000 Independence Avenue, SW., Washington, DC 20585.

FOR FURTHER INFORMATION CONTACT: Kevin M. Smith, (202) 586–8189.

SUPPLEMENTARY INFORMATION:

I. Background
II. Section-by-Section Analysis
III. Procedural Requirements
A. Review Under Executive Order 12866
B. Review Under Executive Order 12778
C. Review Under the Regulatory Flexibility Act
D. Review Under the Paperwork Reduction Act
E. Review Under Executive Order 12612
F. Review Under the National Environmental Policy Act
G. Public Hearing Determination

I. Background

Executive Order (EO) 12861, dated September 11, 1993, Elimination of One-Half of Executive Branch Internal Regulations, was issued by the President to streamline Government operations, improve productivity, and improve customer service. EO 12931, dated October 13, 1994, Federal Procurement Reform, calls for significant changes to make the Government procurement process more effective and efficient. EO 12866, dated October 4, 1993, Regulatory Planning and Review, requires agencies to review regulations to improve effectiveness and to reduce regulatory burden. This proposed rule eliminates existing regulatory material that is unnecessary. In promulgating this rule, the Department will further the objectives of the EOs by reducing the volume of the DEAR; streamlining operations; reducing constraints, prescriptive requirements, and administrative processes; making requirements outcome oriented vs. process oriented; and, defining roles and responsibilities at the lowest appropriate level within the procurement organization by lowering certain responsibilities from the Head of the Contracting Activity to the contracting officer. The DEAR coverage proposed for removal includes material that is for informational purposes only and nonregulatory in nature; internal guidance and procedures; regulations that constrain the Department's own procuring activities; coverage that is more restrictive than the Federal Acquisition Regulation (FAR); and coverage that is repetitive of the FAR or of other regulations.

II. Section-by-Section Analysis

The following sections of the DEAR are proposed to be eliminated:

1. Section 901.103, second sentence, addressing the applicability of the DEAR to procurements using nonappropriated funds; this is recommended guidance and is nonregulatory in nature.

2. Subsection 901.103–70, identifying those types of actions excluded from the scope of the DEAR; this is for informational purposes only and is nonregulatory in nature.

3. Subsection 901.104–3, third sentence of paragraph (a), and paragraph (b), identifying distribution procedures of the DEAR; this is for informational purposes only and is nonregulatory in nature.

4. Section 901.170, explaining references to organizations within DOE; this is for informational purposes only and is nonregulatory in nature.

5. Subsection 901.301–71, addressing the amendment procedure; this is internal procedural information and is nonregulatory in nature.

6. Subsection 901.301–72, paragraphs (a), (b), and (c), detailing other issuances related to acquisition; this is for informational purposes only and is nonregulatory in nature.

7. Subsection 901.601–70, prescribing the use of internal controls for DOE activities; this is internal oversight procedure and is nonregulatory in nature.

8. Subsection 901.603–70, addressing modification to existing contracting officer authority; this is internal oversight procedure and is nonregulatory in nature.

9. Subsection 901.603–71, addressing the responsibility of other Government personnel; this is internal oversight procedure and is nonregulatory in nature.

10. Subsection 901.603–72, paragraph (b), addressing contracting officer subordinates; this is for informational purposes only and is nonregulatory in nature.

11. Subpart 902.1, providing definitions; this is for informational purposes only and is nonregulatory in nature.

12. Subsection 903.101–3, last four sentences, requiring a standards of conduct notebook to be maintained at all contracting activities; this is unduly constrictive oversight of the Department's contracting offices.

13. Section 904.402, paragraph (b), second and third sentences, and paragraphs (c) through (k), providing cross-reference information on security issues; this is for informational purposes only and is nonregulatory in nature.

14. Section 904.403, providing cross-reference information on restricted data; this is for informational purposes only and is nonregulatory in nature.

15. Section 904.601, providing information on contract reporting; this is for informational purposes only and is nonregulatory in nature.

16. Subsection 904.601–70, providing information on contract reporting; this is for informational purposes only and is nonregulatory in nature.

17. Subsection 904.601–71, paragraphs (a) and (b), providing information on contract reporting; this is for informational purposes only and is nonregulatory in nature.

18. Section 904.702, paragraph (b), second sentence, explaining the need for longer retention periods of certain records; this is for informational purposes only and is nonregulatory in nature.

19. Subpart 905.2, addressing research and development advance notices; coverage at FAR 5.205 is sufficient.

20. Subpart 905.3, providing cross-reference information on notices of awards; this is for informational purposes only and is nonregulatory in nature.

21. Subsection 906.303–1, first sentence, which references FAR justification requirements for other than full and open competition; coverage at FAR 6.303–1 is sufficient.

22. Subpart 907.1, addressing acquisition plans; coverage at FAR 7.102 is sufficient.

23. Subpart 907.4, addressing Lease or Purchase requirements; coverage at FAR 7.4 and Federal Property Management Regulation (FPMR) 101–25.5 is sufficient.

24. Section 908.802, the last sentence, addressing forms and instructions to contractors on the acquisition of printing and related supplies; this is procedural information that is already addressed within the section.

25. Subpart 908.70, addressing the use of excess materials from General Services Administration inventories; this is internal procedural information and is nonregulatory in nature.

26. Subpart 908.72, addressing Nevada Test Site support services; this is site-specific policy and is not appropriate for DOE-wide regulations.

27. Section 909.404, addressing debarment, suspension and ineligibility procedures; the separate DOE List of Debarred, Suspended, Ineligible and Voluntarily Excluded Awardees is no longer maintained.

28. Part 910, addressing specifications, standards and other purchase descriptions; this is internal oversight procedure and is nonregulatory in nature.

29. Subpart 912.5, addressing approval of stop work orders; this requirement is more restrictive than the requirement at FAR 12.503(b).

30. Subsection 913.505–3, addressing the use of SF 44's; the coverage at FAR 13.505–3 is sufficient.

31. Subpart 914.2, addressing solicitation of bids; this is for informational purposes only and is nonregulatory in nature.

32. Section 914.401, addressing the opening and receipt of bids; the coverage at FAR 14.401 is sufficient.

33. Subsection 914.402–1, addressing unclassified bids; the coverage at FAR 14.402–1 is sufficient.

34. Subsection 915.406–5, addressing representations and instructions; the coverage at FAR 15.406–5 is sufficient.

35. Section 915.610, addressing written or oral discussions; the coverage at FAR 15.610 is sufficient.

36. Section 915.801, providing a definition of field pricing support; the coverage at FAR 15.801 is sufficient.

37. Subsection 915.804–8, prescribing the use of FAR clauses; the coverage at FAR 15.804–8 is sufficient.

38. Subsection 915.804–70, addressing the submission of uncertified cost or pricing data; the coverage at FAR 15.804–6 is sufficient.

39. Subsection 915.805–70, paragraphs (a), (b), (c), and (f), addressing the use of audits; this is for informational purposes only and is nonregulatory in nature.

40. Section 915.807, addressing prenegotiation plans; coverage at FAR 15.807 is sufficient.

41. Section 915.808, addressing the price negotiation memorandum; coverage at FAR 15.808 is sufficient.

42. Section 916.207, addressing approval for the use of firm-fixed-price, level-of-effort contracts; this requirement is more restrictive than the requirement at FAR 16.207.

43. Subsection 916.301–3, addressing limitations on the use of cost-reimbursement contracts; the referenced determination and findings, prescribed at FAR 16.301–3(c), are no longer required.

44. Section 916.303, providing a cross-reference within DEAR; this is for informational purposes only and is nonregulatory in nature.

45. Subpart 916.6 addressing letter contract definitization and funding requirements; these requirements are more restrictive than the requirements at FAR 16.603–2.

46. Subsection 919.705–2, addressing subcontracting plans; coverage at FAR 19.705–2 is sufficient.

47. Subsection 919.705–5, addressing awards involving subcontracting plans; coverage at FAR 19.705–5 is sufficient.

48. Section 919.708, addressing the use of incentives for subcontracting; this is more restrictive than the requirement at FAR 19.708(c).

49. Part 920, addressing labor surplus area concerns; coverage at FAR Part 20 is sufficient.

50. Subpart 922.4, addressing construction contract labor standards; coverage at FAR 22.4 is sufficient.

51. Part 924, providing cross-reference information on protection of privacy and Freedom of Information policies; this is for informational purposes only and is nonregulatory in nature.

52. Subpart 925.5, addressing payment in foreign currency; coverage at FAR 25.5 is sufficient.

53. Subsection 928.103–2, addressing the need for performance bonds; coverage at FAR 28.103–2 is sufficient.

54. Subpart 928.2, addressing sureties; coverage at FAR 28.2 is sufficient.

55. Subpart 933.2, addressing the contracting officer's written findings in a dispute; coverage at FAR 33.211 is sufficient.

56. Section 935.007, providing a cross-reference to Program Research and Development Announcements; this is for informational purposes only and is nonregulatory in nature.

57. Section 935.015, providing a cross-reference to special research contracts coverage; coverage on that subject was removed in a prior rulemaking and this section is no longer necessary.

58. Section 936.202, paragraphs (a) and (b), addressing specifications for construction contracts; FAR coverage at 36.202 is sufficient.

59. Subpart 937.2, providing a cross-reference to internal directives on consulting services; this is for informational purposes only and is nonregulatory in nature.

60. Section 937.7010, addressing protective services; this is for informational purposes only and is nonregulatory in nature.

61. Section 937.7020, addressing continuity of protective services; this is for informational purposes only and is nonregulatory in nature.

62. Section 937.7030, addressing continuity of protective services; this is for informational purposes only and is nonregulatory in nature.

63. Section 942.000 addressing post award activity; this is for informational purposes only and is nonregulatory in nature.

64. Section 942.001, addressing contract administration; this is for informational purposes only and is nonregulatory in nature.

65. Section 942.002, addressing monitoring of contracts; coverage at FAR Part 42 is sufficient.

66. Section 942.003, providing an explanation of organizations that perform post-award contract management functions; this is for informational purposes only and is nonregulatory in nature.

67. Subpart 942.1, providing an explanation of cross-servicing contract management activity; this is for informational purposes only and is nonregulatory in nature.

68. Subpart 942.2, addressing the reporting of contract administration assignment; this is internal procedural information and is nonregulatory in nature.

69. Section 942.708, addressing quick closeout procedures; this requirement is more restrictive than the requirement at FAR 42.708.

70. Subpart 942.14, addressing traffic and transportation management; this is internal procedural information and is nonregulatory in nature.

71. Part 943 addressing the extension of contracts resulting from unsolicited proposals and the use of forms; this is internal procedural information and is nonregulatory in nature.

72. Subpart 944.1, providing definitions; this is for informational purposes only and is nonregulatory in nature.

73. Subpart 944.2, addressing consent to subcontract; coverage at FAR 44.2 is sufficient.

74. Subsection 945.104–70, addressing the review and correction of contractor property management systems; coverage in the DOE Property Management Regulations at 41 CFR 109–1.52 is sufficient.

75. Section 945.304, providing cross-references on motor vehicle policies; this is for informational purposes only and is nonregulatory in nature.

76. Section 945.501, providing definitions; this is for informational purposes only and is nonregulatory in nature.

77. Subsection 945.502–70, addressing physical protection of property; coverage at FAR 45.5 and in the DOE Property Management Regulations at 41 CFR 109–1.51 is sufficient.

78. Subsection 945.502–71, addressing control of sensitive items of property; coverage at FAR 45.5 and in the DOE Property Management Regulations at 41 CFR 109–1.51 is sufficient.

79. Subsection 945.502–72, addressing the management of precious metals; coverage in the DOE Property Management Regulations at 41 CFR 109–27.53 is sufficient.

80. Section 945.508, specifying the frequency of physical inventories; coverage in the DOE Property Management Regulations at 41 CFR 109–1.51 is sufficient.

81. Section 945.570, addressing motor vehicle and aircraft management; coverage at FAR 45.304 and in the DOE Property Management Regulations at 41 CFR 109–38 is sufficient.

82. Subsection 945.570–1, classifying types of motor vehicles; this is for informational purposes only and is nonregulatory in nature.

83. Subsection 945.570–3, addressing the selection of type of motor vehicle; coverage in the DOE Property Management Regulations at 41 CFR 109–38 is sufficient.

84. Subsection 945.570–4, addressing the identification of motor vehicles; coverage in the DOE Property Management Regulations at 41 CFR 109–38 is sufficient.

85. Subsection 945.570–5, addressing the utilization of motor vehicles; coverage in the DOE Property Management Regulations at 41 CFR 109–38 is sufficient.

86. Subsection 945.570–6, addressing the maintenance of motor vehicles; coverage in the DOE Property Management Regulations at 41 CFR 109–38 is sufficient.

87. Subsection 945.570–9, addressing the purchase and use of aircraft; coverage in the DOE Property Management Regulations at 41 CFR 109–38 is sufficient.

88. Subpart 947.1, addressing transportation insurance and cost-reimbursement contracts; the coverage at FAR 47.1 is sufficient.

89. Subsection 949.108–4, addressing authorization for subcontract settlements; this requirement is more restrictive than the requirement at FAR 49.108–4.

90. Subsection 949.108–8, addressing the assignment of rights under subcontracts; this requirement is more restrictive than the requirement at FAR 49.108–8.

91. Subsection 949.112–1, addressing partial payments; this requirement is more restrictive than the requirement at FAR 49.112–1.

92. Subpart 949.2, addressing the submission of settlement proposals and the bases for settlement proposals; these requirements are more restrictive than the requirements at FAR 49.2.

93. Subpart 949.3, addressing the submission of settlement proposals; this requirement is more restrictive than the requirement at FAR 49.3.

94. Subpart 951.2, addressing contractor use of interagency motor pool vehicles; the coverage at FAR 51.2 is sufficient.

95. Section 951.7000, addressing contractor travel discounts; this is for informational purposes only and is nonregulatory in nature.

96. Section 951.7001, addressing contractor use of Government travel discounts; this is for informational purposes only and is nonregulatory in nature.

97. Subpart 971.2, prescribing contracting activity review requirements; this is unduly constrictive oversight of the Department's contracting offices.

98. Subpart 971.3, addressing procurement management system reviews; these reviews are no longer performed within the Department.

III. Procedural Requirements

A. Review Under Executive Order 12866

This regulatory action has been determined not to be a ''significant regulatory action'' under Executive Order 12866, ''Regulatory Planning and Review,'' (58 FR 51735, October 4, 1993). Accordingly, this action was not subject to review, under that Executive Order, by the Office of Information and Regulatory Affairs of the Office of Management and Budget (OMB).

B. Review Under Executive Order 12778

Section 2 of Executive Order 12778 instructs each agency to adhere to certain requirements in promulgating new regulations and reviewing existing regulations. These requirements, set forth in sections 2(a) and (b)(2), include eliminating drafting errors and needless ambiguity, drafting the regulations to minimize litigation, providing clear and certain legal standards for affected legal conduct, and promoting simplification and burden reduction. Agencies are also instructed to make every reasonable

effort to ensure that the regulation specifies clearly any preemptive effect, effect on existing Federal law or regulation, and retroactive effect; describes any administrative proceedings to be available prior to judicial review and any provisions for the exhaustion of such administrative proceedings; and defines key terms. DOE certifies that this proposed rule meets the requirements of sections 2(a) and (b) of Executive Order 12778.

C. Review Under the Regulatory Flexibility Act

This proposed rule was reviewed under the Regulatory Flexibility Act of 1980, Pub. L. 96–354, which requires preparation of a regulatory flexibility analysis for any rule that is likely to have a significant economic impact on a substantial number of small entities. This proposed rule will have no impact on interest rates, tax policies or liabilities, the cost of goods or services, or other direct economic factors. It will also not have any indirect economic consequences such as changed construction rates. DOE certifies that this proposed rule will not have a significant economic impact on a substantial number of small entities and, therefore, no regulatory flexibility analysis has been prepared.

D. Review Under the Paperwork Reduction Act

No new information collection or recordkeeping requirements are imposed by this proposed rule. Accordingly, no OMB clearance is required under the Paperwork Reduction Act of 1980 (44 U.S.C. 3501, et seq.).

E. Review Under Executive Order 12612

Executive Order 12612, entitled ''Federalism,'' 52 FR 41685 (October 30, 1987), requires that regulations, rules, legislation, and any other policy actions be reviewed for any substantial direct effects on States, on the relationship between the Federal Government and the States, or in the distribution of power and responsibilities among various levels of government. If there are sufficient substantial direct effects, then the Executive Order requires preparation of a federalism assessment to be used in all decisions involved in promulgating and implementing a policy action. DOE has determined that this proposed rule will not have a substantial direct effect on the institutional interests or traditional functions of States.

F. Review Under the National Environmental Policy Act

Pursuant to the Council on Environmental Quality Regulations (40 CFR 1500–1508), the Department has established guidelines for its compliance with the provisions of the National Environmental Policy Act (NEPA) of 1969 (42 U.S.C. 4321, et seq.). Pursuant to Appendix A of Subpart D of 10 CFR 1021, National Environmental Policy Act Implementing Procedures (Categorical Exclusion A6), DOE has determined that this proposed rule is categorically excluded from the need to prepare an environmental impact statement or environmental assessment.

G. Public Hearing Determination

DOE has concluded that this proposed rule does not involve any significant issues of law or fact. Therefore, consistent with 5 U.S.C. 553, DOE has not scheduled a public hearing.

List of Subjects in 48 CFR Parts 901, 902, 903, 904, 905, 906, 907, 908, 909, 910, 912, 913, 914, 915, 916, 919, 920, 922, 924, 925, 928, 933, 935, 936, 937, 942, 943, 944, 945, 947, 949, 951, and 971

Government procurement.

Issued in Washington, D.C., on June 1, 1995.

Richard H. Hopf,

Deputy Assistant Secretary for Procurement and Assistance Management.

For the reasons set out in the preamble, Chapter 9 of Title 48 of the Code of Federal Regulations is proposed to be amended as set forth below.

1. The authority citation for Parts 901, 902, 903, 904, 905, 906, 907, 908, 909, 910, 912, 913, 914, 915, 916, 919, 920, 922, 924, 925, 928, 933, 935, 936, 937, 942, 943, 944, 945, 947, 949, 951, and 971 continues to read as follows:

Authority: 42 U.S.C. 7254; 40 U.S.C. 486(c).

PART 901—FEDERAL ACQUISITION REGULATIONS SYSTEM

901.103 [Amended]

2. Section 901.103 is amended by removing the second sentence.

901.103–70 [Removed]

3. Subsection 901.103–70 is removed.

901.104–3 [Amended]

4. Subsection 901.104–3 is amended by removing the third sentence of paragraph (a), and by removing paragraph (b).

901.170 [Removed]

5. Section 901.170 is removed.

901.301–71 [Removed]

6. Subsection 901.301–71 is removed.

901.301–72 [Amended]

7. Subsection 901.301–72 is amended by removing paragraphs (a), (b), and (c).

901.601–70 [Removed]

8. Subsection 901.601–70 is removed.

901.603–70 [Removed]

9. Subsection 901.603–70 is removed.

901.603–71 [Removed]

10. Subsection 901.603–71 is removed.

901.603–72 [Amended]

11. Subsection 901.603–72 is amended by removing paragraph (b).

PART 902—DEFINITIONS OF WORDS AND TERMS

902.1 [Removed]

12. Subpart 902.1 is removed.

PART 903—IMPROPER BUSINESS PRACTICES AND PERSONAL CONFLICTS OF INTEREST

903.101–3 [Amended]

13. Subsection 903.101–3 is amended by removing the second through fifth sentences.

PART 904—ADMINISTRATIVE MATTERS

904.402 [Amended]

14. Section 904.402 is amended in paragraph (b) by removing the second and third sentences, and by removing paragraphs (c), (d), and (k).

904.403 [Removed]

15. Section 904.403 is removed.

904.601 [Removed]

16. Section 904.601 is removed.

904.601–70 [Removed]

17. Subsection 904.601–70 is removed.

904.601–71 [Amended]

18. Subsection 904.601–71 is amended by removing paragraphs (a) and (b).

904.702 [Amended]

19. Section 904.702 is amended in paragraph (b) by removing the second sentence.

PART 905—PUBLICIZING CONTRACT ACTIONS

905.2 [Removed]

20. Subpart 905.2 is removed.

905.3 [Removed]

21. Subpart 905.3 is removed.

PART 906—COMPETITION REQUIREMENTS

906.303–1 [Amended]

22. Subsection 906.303–1 is amended in paragraph (a) by removing the first sentence.

PART 907—ACQUISITION PLANNING

907.1 [Removed]

23. Subpart 907.1 is removed.

907.4 [Removed]

24. Subpart 907.4 is removed.

PART 908—REQUIRED SOURCES OF SUPPLIES AND SERVICES

908.802 [Amended]

25. Section 908.802 is amended in paragraph (b) by removing the last sentence.

908.70 [Removed]

26. Subpart 908.70 is removed.

908.72 [Removed]

27. Subpart 908.72 is removed.

PART 909—CONTRACTOR QUALIFICATIONS

909.404 [Removed]

28. Section 909.404 is removed.

PART 910—SPECIFICATIONS, STANDARDS, AND OTHER PURCHASE DESCRIPTIONS [REMOVED]

29. Part 910 is removed.

PART 912—CONTRACT DELIVERY OR PERFORMANCE

912.5 [Removed]

30. Subpart 912.5 is removed.

PART 913—SMALL PURCHASE AND OTHER SIMPLIFIED PURCHASE PROCEDURES

913.505–3 [Removed]

31. Subsection 913.505–3 is removed.

PART 914—SEALED BIDDING

914.2 [Removed]

32. Subpart 914.2 is removed.

914.401 [Removed]

33. Section 914.401 is removed.

914.402–1 [Removed]

34. Subsection 914.402–1 is removed.

PART 915—CONTRACTING BY NEGOTIATION

915.406–5 [Removed]

35. Subsection 915.406–5 is removed.

915.610 [Removed]

36. Section 915.610 is removed.

915.801 [Removed]

37. Section 915.801 is removed.

915.804–8 [Removed]

38. Subsection 915.804–8 is removed.

915.804–70 [Removed]

39. Subsection 915.804–70 is removed.

915.805–70 [Amended]

40. Subsection 915.805–70 is amended by removing paragraphs (a), (b), (c), and (f).

915.807 [Removed]

41. Section 915.807 is removed.

915.808 [Removed]

42. Section 915.808 is removed.

PART 916—TYPES OF CONTRACTS

916.207 [Removed]

43. Section 916.207 is removed.

916.301–3 [Removed]

44. Subsection 916.301–3 is removed.

916.303 [Removed]

45. Section 916.303 is removed.

916.6 [Removed]

46. Subpart 916.6 is removed.

PART 919—SMALL BUSINESS AND SMALL DISADVANTAGED BUSINESS CONCERNS

919.705–2 [Removed]

47. Subsection 919.705–2 is removed.

919.705–5 [Removed]

48. Subsection 919.705–5 is removed.

919.708 [Removed]

49. Section 919.708 is removed.

PART 920—LABOR SURPLUS AREA CONCERNS [REMOVED]

50. Part 920 is removed.

PART 922—APPLICATION OF LABOR LAWS TO GOVERNMENT ACQUISITION

922.4 [Removed]

51. Subpart 922.4 is removed.

PART 924—PROTECTION OF PRIVACY AND FREEDOM OF INFORMATION [REMOVED]

52. Part 924 is removed.

PART 925—FOREIGN ACQUISITION

925.5 [Removed]

53. Subpart 925.5 is removed.

PART 928—BONDS AND INSURANCE

928.103–2 [Removed]

54. Subsection 928.103–2 is removed.

928.2 [Removed]

55. Subpart 928.2 is removed.

PART 933—PROTESTS, DISPUTES AND APPEALS

933.2 [Removed]

56. Subpart 933.2 is removed.

PART 935—RESEARCH AND DEVELOPMENT CONTRACTING

935.007 [Removed]

57. Section 935.007 is removed.

935.015 [Removed]

58. Section 935.015 is removed.

PART 936—CONSTRUCTION AND ARCHITECT-ENGINEER CONTRACTS

936.202 [Amended]

59. Section 936.202 is amended by removing paragraphs (a) and (b).

PART 937—SERVICE CONTRACTING

937.2 [Removed]

60. Subpart 937.2 is removed.

937.7010 [Removed]

61. Section 937.7010 is removed.

937.7020 [Removed]

62. Section 937.7020 is removed.

937.7030 [Removed]

63. Section 937.7030 is removed.

PART 942—CONTRACT ADMINISTRATION

942.000 [Removed]

64. Section 942.000 is removed.

942.001 [Removed]

65. Section 942.001 is removed.

942.002 [Removed]

66. Section 942.002 is removed.

942.003 [Removed]

67. Section 942.003 is removed.

942.1 [Removed]

68. Subpart 942.1 is removed.

942.2 [Removed]

69. Subpart 942.2 is removed.

942.708 [Removed]

70. Section 942.708 is removed.

942.14 [Removed]

71. Subpart 942.14 is removed.

PART 943—CONTRACT MODIFICATIONS [REMOVED]

72. Part 943 is removed.

PART 944—SUBCONTRACTING POLICIES AND PROCEDURES

944.1 [Removed]

73. Subpart 944.1 is removed.

944.2 [Removed]

74. Subpart 944.2 is removed.

PART 945—GOVERNMENT PROPERTY

945.104–70 [Removed]

75. Subsection 945.104–70 is removed.

945.304 [Removed]

76. Section 945.304 is removed.

945.501 [Removed]

77. Section 945.501 is removed.

945.502–70 [Removed]

78. Subsection 945.502–70 is removed.

945.502–71 [Removed]

79. Subsection 945.502–71 is removed.

945.502–72 [Removed]

80. Subsection 945.502–72 is removed.

945.508 [Removed]

81. Section 945.508 is removed.

945.570 [Removed]

82. Section 945.570 is removed.

945.570–1 [Removed]

83. Subsection 945.570–1 is removed.

945.570–3 [Removed]

84. Subsection 945.570–3 is removed.

945.570–4 [Removed]

85. Subsection 945.570–4 is removed.

945.570–5 [Removed]

86. Subsection 945.570–5 is removed.

945.570–6 [Removed]

87. Subsection 945.570–6 is removed.

945.570–9 [Removed]

88. Subsection 945.570–9 is removed.

PART 947—TRANSPORTATION

947.1 [Removed]

89. Subpart 947.1 is removed.

PART 949—TERMINATION OF CONTRACTS

949.108–4 [Removed]

90. Subsection 949.108–4 is removed.

949.108–8 [Removed]

91. Subsection 949.108–8 is removed.

949.112–1 [Removed]

92. Subsection 949.112–1 is removed.

949.2 [Removed]

93. Subpart 949.2 is removed.

949.3 [Removed]

94. Subpart 949.3 is removed.

PART 951—USE OF GOVERNMENT SOURCES BY CONTRACTORS

951.2 [Removed]

95. Subpart 951.2 is removed.

951.7000 [Removed]

96. Section 951.7000 is removed.

951.7001 [Removed]

97. Section 951.7001 is removed.

PART 971—REVIEW AND APPROVAL OF CONTRACT ACTIONS

971.2 [Removed]

98. Subpart 971.2 is removed.

971.3 [Removed]

99. Subpart 971.3 is removed.

[FR Doc. 95–13866 Filed 6–7–95; 8:45 am]

BILLING CODE 6450–01–P

DEPARTMENT OF COMMERCE

National Oceanic and Atmospheric Administration

50 CFR Part 227

[I.D. 042795A]

Listing Endangered and Threatened Species and Designating Critical Habitat: Petition To List Chinook Salmon Throughout its Range in California, Oregon, Washington, and Idaho

AGENCY: National Marine Fisheries Service (NMFS), National Oceanic and Atmospheric Administration (NOAA), Commerce.

ACTION: Notice of petition finding; request for information.

SUMMARY: NMFS has received a petition to list chinook salmon (*Oncorhynchus tshawytscha*) throughout its range in California, Oregon, Washington, and Idaho, and to designate critical habitat under the Endangered Species Act of 1973 (ESA). The petition presents substantial scientific information indicating that the request for listing may be warranted. Therefore, NMFS is initiating a status review to determine if the petitioned action is warranted. To ensure that the review is comprehensive, NMFS is soliciting information and data regarding this action. Information received during the comment period for this status review will be used in NMFS' ongoing review of West Coast chinook salmon populations.

DATES: Comments and information must be received by August 7, 1995.

ADDRESSES: Requests for copies of the petition and comments regarding the species populations in Washington, Oregon, and Idaho should be submitted to Dr. Jacqueline Wyland, Chief, Environmental and Technical Services Division, NMFS, 525 NE Oregon Street, Suite 500, Portland, OR 97232. Comments regarding species populations in California should be submitted to James H. Lecky, Chief, Protected Species Management Division, NMFS, Southwest Region, 501 W. Ocean Blvd., Suite 4200, Long Beach, CA 90802–4213.

FOR FURTHER INFORMATION CONTACT: Garth Griffin, 503–231–2005; Craig Wingert, 310–980–4021; or Marta Nammack, 301–713–1401.

SUPPLEMENTARY INFORMATION:

Background

Section 4 of the ESA contains provisions allowing interested persons to petition the Secretary of the Interior or the Secretary of Commerce (Secretary) to add a species to or remove a species from the List of Endangered and Threatened Wildlife and to designate critical habitat. Section 4(b)(3)(A) of the ESA requires that, to the maximum extent practicable, within 90 days after receiving such a petition, the Secretary make a finding whether the petition presents substantial scientific or commercial information indicating that the petitioned action may be warranted.

Petition Received

On February 1, 1995, the Secretary received a petition from the Oregon Natural Resources Council (ONRC) and Richard K. Nawa to list chinook salmon throughout its range in California, Oregon, Washington, and Idaho, and to designate critical habitat under the ESA. The Assistant Administrator for Fisheries, NOAA (AA), makes a finding that the petition presents substantial scientific information indicating that a listing may be warranted based on the criteria specified in 50 CFR 424.14(b)(2), and based on evidence presented in the petition that the petitioned populations may qualify as ''species'' under the ESA, in accordance with NMFS' Policy on Applying the Definition of Species under the Endangered Species Act to Pacific Salmon (56 FR 58612, November 20, 1991). Under section 4(b)(3)(A) of the ESA, this finding requires that a review of the status of chinook salmon populations in California, Oregon,

Washington, and Idaho be conducted to determine if the petitioned action is warranted. Information received during this status review will be used in NMFS' ongoing review of West Coast chinook salmon populations (59 FR 46808, September 12, 1994).

Listing Factors and Basis for Determination

Under section 4(a)(1) of the ESA, a species can be determined to be endangered or threatened for any of the following reasons: (1) Present or threatened destruction, modification, or curtailment of its habitat or range; (2) overutilization for commercial, recreational, scientific, or educational purposes; (3) disease or predation; (4) inadequacy of existing regulatory mechanisms; or (5) other natural or manmade factors affecting its continued existence. In addition, under section 4(b)(7) of the ESA, the Secretary may at any time issue an emergency regulation if there exists a significant risk to the well-being of the species. In such a case, the Secretary must publish a **Federal Register** notice detailing the reasons for an emergency listing. Listing determinations are made solely on the best scientific and commercial data available.

Information Solicited

To ensure that the chinook salmon status review is complete and is based on the best available scientific and commercial data, NMFS is soliciting information and comments concerning: (1) Whether or not the populations qualify as ''species'' under the ESA in accordance with NMFS' Policy on Applying the Definition of Species Under the Endangered Species Act (56 FR 58612, November 20, 1991); and (2) whether or not the populations are endangered or threatened based on the above listing criteria. Specifically, NMFS is soliciting information in the following areas: Influence of historical and present hatchery fish releases on naturally spawning populations of chinook salmon, separation of hatchery and natural chinook salmon escapement, alteration of chinook salmon freshwater and marine habitats, disease epizootiology of chinook salmon, age structure of chinook salmon populations, migration timing and behavior of juvenile and adult chinook salmon, and interactions of chinook salmon with other salmonids. This information should address all chinook salmon populations in California, Oregon, Washington, and Idaho. NMFS is also soliciting information regarding factors which have contributed to the decline of west coast chinook salmon populations, and any efforts being made to protect this species. In conducting this status review, NMFS will consider information received in response to a very similar request for information published in the **Federal Register** (59 FR 46808, September 12, 1994) in conjunction with NMFS' decision to conduct a review of West Coast chinook salmon populations. Consequently, it is not necessary for parties to submit the same information for this request. Copies of the petition are available (see **ADDRESSES**).

Critical Habitat

NMFS is also requesting information on areas that may qualify as critical habitat for California, Oregon, Washington, and Idaho populations of chinook salmon. Areas that include the physical and biological features essential to the recovery of the species should be identified. Areas outside the present range should also be identified if such areas are essential to the recovery of the species. Essential features should include, but are not limited to: (1) Space for individual and population growth, and for normal behavior; (2) food, water, air, light, minerals, or other nutritional or physiological requirements; (3) cover or shelter; (4) sites for reproduction and rearing of offspring; and (5) habitats that are protected from disturbance or are representative of the historic geographical and ecological distributions of the species.

For areas potentially qualifying as critical habitat, NMFS is requesting information describing: (1) The activities that affect the area or could be affected by the designation, and (2) the economic costs and benefits of additional requirements of management measures likely to result from the designation.

The economic cost to be considered in the critical habitat designation under the ESA is the probable economic impact of the (critical habitat) designation upon proposed or ongoing activities (50 CFR 424.19). NMFS must consider the incremental costs specifically resulting from a critical habitat designation that are above the economic effects attributable to listing the species. Economic effects attributable to listing include actions resulting from section 7 consultations under the ESA to avoid jeopardy to the species and from the taking prohibitions under section 9 of the ESA. Comments concerning economic impacts should distinguish the costs of listing from the incremental costs that can be directly attributed to the designation of specific areas as critical habitat.

Data, information, and comments should include: (1) Supporting documentation such as maps, bibliographic references, or reprints of pertinent publications; and (2) the person's name, address, and association, institution, or business.

Dated: June 2, 1995.

William W. Fox, Jr.,

Director, Office of Protected Resources, National Marine Fisheries Service.

[FR Doc. 95–13965 Filed 6–7–95; 8:45 am]

BILLING CODE 3510–22–F

Notices

Federal Register

Vol. 60, No. 110

Thursday, June 8, 1995

This section of the FEDERAL REGISTER contains documents other than rules or proposed rules that are applicable to the public. Notices of hearings and investigations, committee meetings, agency decisions and rulings, delegations of authority, filing of petitions and applications and agency statements of organization and functions are examples of documents appearing in this section.

DEPARTMENT OF AGRICULTURE

Rural Utilities Service

Notice of Intent To Prepare an Environmental Impact Statement To Evaluate Aquifer Appropriations at the Burr Well Field and To Fund the Design and Construction of the Northeast Phase of the Lincoln-Pipestone Rural Water System

AGENCY: Rural Utilities Service, USDA.

ACTION: Notice of intent.

SUMMARY: The Rural Utilities Service (RUS), USDA announces its intent to prepare an Environmental Impact Statement (EIS) pursuant to the National Environmental Policy Act of 1969 (NEPA) (U.S.C. 4231 *et seq.*) in accordance with the Council on Environmental Quality regulations for implementing the procedural provisions of NEPA (40 CFR 1500–1508) and Agency regulations 7 CFR 1940–G. The primary scope of the EIS is to evaluate water appropriations from a hydrological subunit of the Prairie Coteau Aquifer at the Burr Well Field for the Lincoln-Pipestone Rural Water System (LPRWS) in southwestern Minnesota and its potential affects on surface water bodies and wetlands in the area and to evaluate the environmental impacts of an expansion phase of LPRWS—the Northeast Phase. With this notice, RUS invites any affected Federal, State, and local Agencies and other interested persons to comment on the scope and the significant issues to be analyzed in depth in the EIS.

DATES: Written comments on the scope of the EIS will be accepted 30 days after the public scoping meetings are held.

ADDRESSES: Comments should be sent to Mark S. Plank, USDA, Rural Economic and Community Development Services, Rural Utilities Service, Program Support Staff, AG Box 0761, Washington, DC 20250, telephone (202) 720–1640 or Fax (202) 690–4335.

FOR FURTHER INFORMATION CONTACT: John J. Melbo, USDA, Rural Economic and Community Development Services, 410 AgriBank Building, 375 Jackson Street, St. Paul, MN 55101–1853, telephone (612) 290–3842 or Mark S. Plank, USDA, Rural Economic and Community Development Services, Rural Utilities Service, Program Support Staff, AG Box 0761, Room 6309, Washington, DC 20250–0761, telephone (202) 720–1640.

SUPPLEMENTARY INFORMATION: From a historic perspective, water in adequate quantity and quality has been difficult to obtain in southwest Minnesota. Periodic drought conditions often deplete already marginal supplies. Shallow farm wells in the area have been affected by drought and pollution from agricultural run-off that has resulted in nitrate and pesticide contamination. Deeper wells in the area are costly to construct and usually yield highly mineralized water with high levels of iron, manganese, and sulfates. In an attempt to resolve water supply difficulties, the LPRWS, headquartered in Lake Benton, Minnesota, was organized as a Minnesota municipality for the sole purpose of delivering and supplying high quality water supplies to rural users and various municipalities. LPRWS is governed by a board of commissioners who are appointed by the District Court. Water supply costs are borne by LPRWS customers and through various federal grants.

LPRWS currently provides water service to 1,700 rural customers and seventeen cities in southwest Minnesota. LPRWS has constructed its water system in various phases and has utilized several well fields to provide water for the different phases. The current phase, in which concerns have been raised, is the *Existing System North/Lyon County Expansion* project. The well field designed to supply water for this phase and future service areas in the Burr Well Field. The Burr Well Field is utilizing a subunit of the Prairie Coteau aquifer. The Prarie Coteau aquifer is collectively defined as numerous lenticular bodies of glacial outwash buried beneath a surficial layer of glacial till and within a thick layer of glacial drift.

RUS, and its predecessor agencies, has provided a series of loans and grants to fund infrastructure development for the LPRWS. As required by NEPA, RUS has prepared a series of Environmental Assessments (EA) for the various phases. The previous EA conducted for the Existing North/Lyon County Expansion phase was completed in 1992 with an issuance of a Finding of No Significant Impact (FONSI) on February 17, 1992. During the construction phase of the water treatment plant at the Burr Well Field concerns were raised by local citizens and state regulatory bodies concerning potential impacts to surface water bodies and wetland areas from groundwater appropriations at the Burr Well Field. To respond to these concerns RUS decided to amend the earlier EA and re-examine the issues raised by concerned parties. Upon completion of the EA amendment, RUS concluded that an Environmental Impact Statement was necessary to fully evaluate the technical issues raised by the concerned parties.

The primary unresolved concern includes, but is not limited to, the appropriation of water from the Prairie Coteau aquifer at the Burr Well Field site. As mentioned above, the Burr Well Field is utilizing a subunit of the Prairie Coteau aquifer. This subunit appears to be one of the aforementioned lenticular bodies of outwash within a larger deposit of glacial drift and is under artesian conditions within its areal extent and at the well head site. The artesian nature of the outwash body is the source of the concern. It is hypothesized that due to localized artesian conditions, numerous surface water bodies and wetland areas receive, through a hydraulic connection, an undetermined quantity of water as recharge and that the recharge sustains water levels in these areas. Since the Burr Well Field is utilizing this aquifer, it is alleged that sustained appropriation of water at the well head may adversely reduce recharge to area wetlands and lakes, thus altering water budgets for these resources. The EIS will attempt to evaluate these concerns, as well as, evaluate environmental impacts from the construction of the Northeast Phase.

Two public meetings will be held in the project area to receive oral and written comments. One meeting will be held in Minnesota and the other one in South Dakota. Detail about these meetings will be announced later in area newspapers. Oral comments received at

this meeting will be accorded the same weight as written comments. The U.S. Environmental Protection Agency will participate in the EIS process as a cooperating agency.

After the scoping process and the initial environmental analysis are completed RUS will issue a Draft EIS. A Notice of Availability of the Drift EIS will be published in the **Federal Register** and area newspapers, and public comments will again be solicited. Those persons who choose not to comment on the scope of the document at this time but desire a copy of the Draft EIS should sent their names and addresses to Mark S. Plank at the address listed above. RUS anticipates releasing a final EIS in about 16–18 months.

Dated: June 1, 1995.

Adam M. Golodner,

Acting Administrator, Rural Utilities Service.

[FR Doc. 95–14003 Filed 6–7–95; 8:45 am]

BILLING CODE 3410–15–M

Environmental Impact Statement: Water Supply Development for the Catoosa Utility District and Upper Cumberland Plateau Region of East Tennessee

AGENCY: Rural Utilities Service, USDA.

ACTION: Notice of intent clarification.

SUMMARY: This notice clarifies the Tennessee Valley Authority's (TVA) Notice of Intent (NOI) that was published on February 8, 1995, at 60 FR 7623–7624. In that notice, TVA announced that it and the Rural Utilities Service (RUS) would be cooperating in the preparation of an Environmental Impact Statement (EIS), pursuant to the National Environmental Policy Act (NEPA), on a water supply development proposal for the Catoosa Utility District (CUD) and Upper Cumberland Plateau Region of East Tennessee. One clarification is that the NOI issued by TVA was published on behalf of RUS, the lead agency. Also in today's notice, the agencies clarify their roles in the preparation of the EIS and its focus.

ADDRESSES: Comments should be sent to Dale V. Wilhelm, NEPA Liaison, Tennessee Valley Authority, 400 West Summit Drive, WT 8B, Knoxville, Tennessee 37902, phone (615) 632–7182.

FOR FURTHER INFORMATION CONTACT: Jack L. Davis, Manager, Water Resource Projects, Tennessee Valley Authority, 400 West Summit Drive, Knoxville, Tennessee 37902, phone (615) 632–7183 or Tom Mayberry, USDA, Rural Economic and Community Development, 3322 West End Ave., Suite 300, Nashville, TN 37203, phone (615) 783–1345.

SUPPLEMENTARY INFORMATION: RUS has been asked by the CUD to provide financial assistance for a proposed water supply dam and impoundment on Clear Creek, a tributary of the Obed River. The CUD is considering the construction of a 100-acre water supply impoundment, a 1.5 million gallons per day treatment plant, and transmission lines that feed into existing water distribution systems. Subsequent to this request, RUS decided to prepare an EIS on the proposed action. Pursuant to RUS's status as lead agency for this action, RUS requested TVA participate in the preparation of the EIS as a cooperating agency. TVA's status as a cooperating agency is defined by two factors: TVA's regulatory status in reviewing and approving impoundment structures in the Tennessee River and its tributaries under Section 26a of the TVA Act; and TVA's specialized expertise in evaluating community and regional water supply needs, developing appropriate responses to defined needs, and the design and construction of dams and impoundments. RUS, as consistent with its lead agency status, shall supervise the preparation of the EIS.

The primary focus of the EIS will be to analyze design and engineering alternatives for achieving the goal of providing a reliable source of water to people utilizing CUD's services. A secondary focus of the EIS, as required by NEPA, is to consider and evaluate reasonable alternative water supply scenarios which, in this case, includes those supply options from a more regional perspective. The necessity to evaluate a more regional water supply perspective is prompted by numerous communities on the Upper Cumberland Plateau Region of eastern Tennessee who have expressed an interest to RUS for consideration of future financial assistance in developing reliable water sources for their citizens. This EIS will assist RUS in determining the economic feasibilities and environmental impacts of a range of water supply options. Alternatives that may be considered for both the primary and secondary forces of the EIS include: Construction of a water impoundment structure on Clear Creek or other water courses; installation of a water pipeline from Watts Bar, Center Hill, or Dale Hollow Reservoirs; and regional water supply options.

TVA and RUS, also, issued a notice on March 27, 1995, at 60 FR 15810, that announced an extension of the public scoping period until June 5, 1995. The agencies will continue to accept written comments on the scope of the EIS through that date. In addition, the comments provided at the April 4, 1995, public scoping meeting will continue to be considered.

Dated: June 1, 1995.

Adam M. Golodner,

Acting Administrator Rural Utilities Service.

[FR Doc. 95–14004 Filed 6–7–95; 8:45 am]

BILLING CODE 3410–15–M

Forms Under Review by Office of Management and Budget

June 2, 1995.

The Department of Agriculture has submitted to OMB for review the following proposal for the collection of information under the provisions of the Paperwork Reduction Act (44 U.S.C. Chapter 35) since the last list was published. This list is grouped into new proposals, revisions, extension, or reinstatements. Each entry contains the following information:

(1) Agency proposing the information collection; (2) Title of the information collection; (3) Form number(s), if applicable; (4) Who will be required or asked to report; (5) An estimate of the number of responses; (6) An estimate of the total number of hours needed to provide the information; (7) Name and telephone number of the agency contract person.

Questions about the items in the listing should be directed to the agency person named at the end of each entry. Copies of the proposed forms and supporting documents may be obtained from: Department Clearance Officer, USDA, OIRM, Room 404-W Admin. Bldg., Washington, D.C. 20250, (202) 690–2118.

Extension

- Consolidated Farm Service Agency

7 CFR 1435 Price Support Loan Program for Sugar Beets and Sugarcane
SU–2, SU–3, SU–4, SU–5, SU–6 and CCC–278
Business or other for-profit; 330 responses; 841 hours
Dave Wolf, (202) 720–4704

- Rural Economic & Community Development

7 CFR 1944–D, Farm Labor Housing and Grant Policies, Procedures, and Authorizations
Not-for-profit institutions; Farms; State, Local or Tribal Government; 770 responses; 8,762 hours
Jack Holston, (202) 720–9736

- Forest Service

Recreation Fee Permit Envelope
FS–2300–26, 26A

Individuals or households; 2,000,000 responses; 60,000 hours
Jon Meade, (202) 205–1129

Revision

• Agricultural Research Service
National Nutrient Database for Child Nutrition Program (NNDCNP)
Business or other for-profit; Federal Government; 1,500 responses; 4,125 hours
Rena Cutrufelli, (301) 734–5639

• Consolidated Farm Service Agency
7 CFR Part 1435, Sugar and Fructose Marketing Allotment
Regulations for Fiscal Years 1992 through 1998
CCC–831, CCC–832, CCC–835, CCC–833
Individuals or households; Business or other for-profit; Farms; 936 responses; 23,460 hours
Bob Barry, (202) 720–3391

Reinstatement Without Change

• Consolidated Farm Service Agency
7 CFR Part 7 and Title 5 U.S.C. 1104, Application for County Employment and Supplemental Qualifications Statement ASCS–650 and ASCS–675
Individuals or households; responses 15,000; hours 16,000
Don Samuels, (202) 720–7517

Donald E. Hulcher,

Deputy Departmental Clearance Officer.

[FR Doc. 95–14005 Filed 6–7–95; 8:45 am]

BILLING CODE 3410–01–M

DEPARTMENT OF COMMERCE

Foreign-Trade Zones Board

[Docket 28–95]

Foreign-Trade Zone 145—Shreveport, Louisiana; Application for Expansion

An application has been submitted to the Foreign-Trade Zones Board (the Board) by the Caddo-Bossier Port Commission, grantee of Foreign-Trade Zone 145, requesting authority to expand its zone in the Shreveport, Louisiana, area, within the Shreveport-Bossier City Customs port of entry. The application was submitted pursuant to the provisions of the Foreign-Trade Zones Act, as amended (19 U.S.C. 81a–81u), and the regulations of the Board (15 CFR part 400). It was formally filed on May 30, 1995.

FTZ 145 was approved on January 7, 1988 (Board Order 370, 53 FR 1503, 1/20/88). The zone currently consists of a 116-acre site on U.S. Highway 171 at Baird Road, Shreveport. The zone project also includes subzone status for the AT&T Shreveport Works.

The applicant is now requesting authority to expand the general-purpose zone to include the new Port of Shreveport-Bossier terminal complex (2,000 acres), located 4 miles south of Shreveport in Caddo Parish, Louisiana. The Port complex primarily is owned and operated by the applicant, with some privately-owned facilities.

No specific manufacturing requests are being made at this time. Such requests would be made to the Board on a case-by-case basis.

In accordance with the Board's regulations, a member of the FTZ Staff has been designated examiner to investigate the application and report to the Board.

Public comment on the application is invited from interested parties. Submissions (original and 3 copies) shall be addressed to the Board's Executive Secretary at the address below. The closing period for their receipt is August 7, 1995. Rebuttal comments in response to material submitted during the foregoing period may be submitted during the subsequent 15-day period (to August 22, 1995).

A copy of the application and accompanying exhibits will be available for public inspection at each of the following locations:

Office of the Port Director, U.S. Customs Service, 6125 Interstate Drive, Bay 11, Shreveport, Louisiana 71109
Office of the Executive Secretary, Foreign-Trade Zones Board, Room 3716, U.S. Department of Commerce, 14th and Pennsylvania Avenue, NW., Washington, DC 20230.

Dated: June 2, 1995.

Dennis Puccinelli,

Acting Executive Secretary.

[FR Doc. 95–14071 Filed 6–7–95; 8:45 am]

BILLING CODE 3510–DS–P

[Order No. 748]

Grant of Authority for Subzone Status, Loop Inc. (Crude Oil Terminal System) Lafourche and St. James Parishes, LA

Pursuant to its authority under the Foreign-Trade Zones Act of June 18, 1934, as amended (19 U.S.C. 81a-81u), the Foreign-Trade Zones Board (the Board) adopts the following Order:

Whereas, by an Act of Congress approved June 18, 1934, an Act ''To provide for the establishment . . . of foreign-trade zones in ports of entry of the United States, to expedite and encourage foreign commerce, and for other purposes,'' as amended (19 U.S.C. 81a-81u) (the Act), the Foreign-Trade Zones Board (the Board) is authorized to grant to qualified corporations the privilege of establishing foreign-trade zones in or adjacent to U.S. Customs ports of entry;

Whereas, the Board's regulations (15 CFR part 400) provide for the establishment of special-purpose subzones when existing zone facilities cannot serve the specific use involved;

Whereas, an application from the South Louisiana Port Commission, grantee of Foreign-Trade Zone 124, for authority to establish special-purpose subzone status for the crude oil terminal system operated by LOOP Inc. in Lafourche and St. James Parishes, Louisiana, was filed by the Board on November 17, 1994, and notice inviting public comment was given in the **Federal Register** (FTZ Docket 37–94, 59 FR 60951, 11/29/94); and,

Whereas, the Board has found that the requirements of the FTZ Act and Board's regulations are satisfied, and that approval of the application is in the public interest;

Now, therefore, the Board hereby authorizes the establishment of a subzone (Subzone 124D) at the LOOP Inc. facilities in Lafourche and St. James Parishes, Louisiana, at the location described in the application, subject to the FTZ Act and the Board's regulations, including § 400.28.

Signed at Washington, DC, this 1st day of June, 1995.

Susan G. Esserman,

Assistant Secretary of Commerce for Import Administration, Alternate Chairman, Foreign-Trade Zones Board.

John J. Da Ponte, Jr.,

Executive Secretary.

[FR Doc. 95–14072 Filed 6–7–95; 8:45 am]

BILLING CODE 3510–DS-P

[Order No. 750]

Grant of Authority for Subzone Status, Merck & Co., Inc., (Pharmaceuticals), Rahway, New Jersey

Pursuant to its authority under the Foreign-Trade Zones Act of June 18, 1934, as amended (19 U.S.C. 81a-81u), the Foreign-Trade Zones Board (the Board) adopts the following Order:

Whereas, by an Act of Congress approved June 18, 1934, an Act ''To provide for the establishment . . . of foreign-trade zones in ports of entry of the United States, to expedite and encourage foreign commerce, and for other purposes,'' as amended (19 U.S.C. 81a-81u) (the Act), the Foreign-Trade Zones Board (the Board) is authorized to grant to qualified corporations the privilege of establishing foreign-trade zones in or adjacent to U.S. Customs ports of entry;

Whereas, the Board's regulations (15 CFR part 400) provide for the establishment of special-purpose subzones when existing zone facilities cannot serve the specific use involved;

Whereas, an application from the Port Authority of New York and New Jersey, grantee of Foreign-Trade Zone 49, for authority to establish special-purpose subzone status at the pharmaceutical manufacturing facility of Merck & Co., Inc., in Rahway, New Jersey, was filed by the Board on May 20, 1994, and notice inviting public comment was given in the **Federal Register** (FTZ Docket 21–94, 59 FR 28052, 5–31–94); and,

Whereas, the Board has found that the requirements of the FTZ Act and Board's regulations are satisfied, and that approval of the application is in the public interest;

Now, therefore, the Board hereby authorizes the establishment of a subzone (Subzone 49D) at the plant site of Merck & Co., Inc., in Rahway, New Jersey, at the location described in the application, subject to the FTZ Act and the Board's regulations, including § 400.28.

Signed at Washington, DC, this 1st day of June 1995.

Susan G. Esserman,

Assistant Secretary of Commerce for Import Administration, Alternate Chairman, Foreign-Trade Zones Board.

Attest:

John J. Da Ponte, Jr.,

Executive Secretary.

[FR Doc. 95–14073 Filed 6–7–95; 8:45 am]

BILLING CODE 3510–DS–P

International Trade Administration

[A–475–818, A–489–805]

Initiation of Antidumping Duty Investigations: Certain Pasta From Italy and Turkey

AGENCY: Import Administration, International Trade Administration, Department of Commerce

EFFECTIVE DATE: June 8, 1995.

FOR FURTHER INFORMATION CONTACT: John Brinkmann at (202) 482–5288, or Greg Thompson at (202) 482–3003, Office of Antidumping Investigations, Import Administration, International Trade Administration, U.S. Department of Commerce, 14th Street and Constitution Avenue NW., Washington, DC 20230.

Initiation of Investigations

The Applicable Statute

Unless otherwise indicated, all citations to the statute are references to the provisions effective January 1, 1995, the effective date of the amendments made to the Tariff Act of 1930 (the Act) by the Uruguay Round Agreements Act (URAA).

The Petition

On May 12, 1995, the Department of Commerce (the Department) received a petition filed in proper form by Borden, Inc., Hershey Foods Corp., and Gooch Foods, Inc. (the petitioners), three U.S. producers of certain pasta. Supplements to the petition were filed on May 26 and June 1, 1995.

In accordance with section 732(b) of the Act, the petitioners allege that imports of certain pasta from Italy and Turkey are being, or are likely to be, sold in the United States at less than fair value within the meaning of section 731 of the Act, and that such imports are materially injuring, or threatening material injury to, a U.S. industry.

The petitioners state that they have standing to file the petition because they are interested parties, as defined under section 771(9)(C) of the Act.

Determination of Industry Support for the Petition

Section 732(c)(4)(A) of the Act requires the Department to determine, prior to the initiation of an investigation, the domestic industry supports an antidumping petition. A petition meets this requirement if (1) the domestic producers or workers who support the petition account for at least 25 percent of the total production of the domestic like product; and (2) the domestic producers or workers who support the petition account for more than 50 percent of the production of the domestic like product produced by that portion of the industry expressing support for, or opposition to, the petition.

A review of the industry support data provided in the petition and other production information readily available to the Department indicates that the petitioners account for more than 25 percent of the total production of the domestic like product and for more than 50 percent of that produced by companies expressing support for, or opposition to, the petition. The Department received no expressions of opposition to the petition from any interested party. Accordingly, the Department determines that this petition is supported by the domestic industry.

Scope of the Investigations

The Department has inherent authority to redefine and clarify the scope of an investigation, as set forth in a petition, whenever it determines that the petition language is overly broad, or insufficiently specific to allow proper investigation, or is in any other way defective. *See NTN Bearing Corp.* v. *United States, 747 F. Supp. 726 (CIT 1990).* We revised the petitioners' proposed scope to eliminate channel of trade as a scope criterion in order to ensure that it would be clear and administrable.

The scope of these investigations consists of certain non-egg dry pasta in packages of five pounds (or 2.27 kilograms) or less, whether or not enriched or fortified or containing milk or other optional ingredients such as chopped vegetables, vegetable purees, milk, gluten, diastases, vitamins, coloring and flavorings, and up to two percent egg white. The pasta covered by this scope is typically sold in the retail market, in fiberboard or cardboard cartons or polyethylene or polypropylene bags, of varying dimensions.

Excluded from the scope of these investigations are refrigerated, frozen, or canned pastas, as well as all forms of egg pasta, with the exception of non-egg dry pasta containing up to two percent egg white.

The merchandise under investigation is currently classifiable under items 1902.19.20 of the *Harmonized Tariff Schedule of the United States (HTSUS).* Although the *HTSUS* subheadings are provided for convenience and customs purposes, our written description of the scope of this investigation is dispositive.

Italy

Export Price and Normal Value

The petitioners based export price on two sources. First, the petitioners based export price on the average unit values (AUVs) derived from the IM–146 monthly import statistics for HTSUS subheading 1902.19.20, published by the U.S. Department of Commerce, for the months of December 1994 and January and February 1995. These AUVs corresponded to the months the available home market price lists were in effect. The AUVs, which represent the f.o.b. Italy price of the subject pasta, were not adjusted for foreign inland freight. We find the AUVs a reasonable basis for export price because 1) the HTSUS subheading is inclusive of all sales of the subject merchandise, 2) there were limited imports of non-subject pasta under this subheading, and 3) a market research report submitted by the petitioners shows the AUVs to be consistent with the average export values of non-egg pasta from Italy to the U.S.

The second methodology used by the petitioners was based on U.S. retail prices obtained from 1) the domestic industry's weekly sales reports compiled by the petitioners' own sales representative for November and December of 1994, and 2) *InfoScan Markets*, which reports published weekly prices charged by U.S. retailers for pasta for the month of January 1995. The prices used were for brand name products of two Italian producers, and were adjusted downward for U.S. ocean freight and other movement charges.

The petitioners used Italian producer price lists to wholesale customers obtained from a market research report as the basis for normal value. For comparisons to the three U.S. retail prices, the petitioners selected a single ''regular or regular cut'' pasta price from the appropriate producer's price list. For comparisons to the U.S. AUVs, the petitioners selected a single price from a producers' price list. Because the prices were reported in Italian lire per kilogram (kg), the petitioners calculated the lire per pound (lb) equivalent for each product listed and then converted to U.S. dollars per pound using the average exchange rate for the two month period that is used to calculate the U.S. prices. The petitioners deducted a nine percent quantity discount and 7.5 percent ''other discount'' based on the Italian market research report. Finally, the petitioners made an adjustment to normal value for U.S. and Italian imputed credit expenses.

We find the petitioners' selection of home market prices not to be representative comparisons to the U.S. export price to which they are being compared. In the case of the AUVs, the petitioners have selected a single price of a specific pasta type to compare to an export price which is an average of all imports of the subject pasta from Italy. For purposes of this initiation, we have revised the normal value to a simple average of all of the subject pasta prices that are listed in the producer's price list used by the petitioners in their fair value comparisons. In the case of the export prices based on the three retail prices described as ''regular or regular cuts,'' we have revised the normal value to be a simple average of the subject pasta prices that are listed in producer's price list used by the petitioners that are described in that price list as ''regular'' pasta.

Based on comparisons of export price to normal value, the estimated dumping margins for certain pasta from Italy range from 21.85 percent to 71.49 percent.

Turkey

Export Price and Normal Value

The petitioners based export price on the AUVs derived from the IM–146 monthly import statistics for HTSUS subheading 1902.19.20, published by the U.S. Department of Commerce for the months of January and February, 1995. Claiming that Turkey's economy is hyperinflationary, the petitioners used AUVs for the month when the comparison home market sales occurred as the basis for export price. Specifically, petitioners state that Turkey experienced an annual inflation rate of 70 percent during 1994, which rose to approximately 130 percent in early 1995. The AUVs were not adjusted for foreign inland freight. We find the AUVs a reasonable basis for export price for the same reasons stated above for Italy.

The petitioners based normal value on January and February 1995 prices between a Turkish producer and its wholesaler which were obtained by a market researcher. The gross home market prices were adjusted downward for the following costs: value added taxes, quantity discounts, special annual rebate, and average delivery costs. The petitioners converted the unit price quotes in Turkish lire to U.S. dollars using the exchange rates that were in effect on or about the time the home market sales occurred.

In accordance with Section 773(b)(2) of Act, the petitioners alleged that sales of certain pasta in the home market were made at prices below the cost of production (COP). The components of COP, as enumerated in Section 773(b)(3) of the Act, are the cost of manufacture (COM), packing and selling, general, and administrative (SG&A) expenses. SG&A includes the company's net financing expense.

The petitioners calculated COM based on their own production experience for January and February 1995, adjusted for known differences between costs incurred to produce certain pasta in the United States and production costs incurred for the merchandise in Turkey. For SG&A expenses, the petitioners used their own 1994 audited annual financial statements because they could not obtain financial statements for a Turkish pasta or food processing company. The Department normally uses cost information specific to the home market. However, the petitioners documented that they attempted to obtain financial statements through various sources but were unable to gather financial data on the Turkish pasta or food processing industry.

The allegation that the Turkish producers are selling the foreign like product in their home market at prices below its COP is based upon a comparison of the adjusted home market prices with the calculated COP. Based on this reasonably available information, we find reasonable grounds to believe or suspect that sales of the foreign like product may have been made at prices below COP in accordance with section 773(b)(2)(A)(i) of the Act. Accordingly, the Department is initiating a cost investigation with respect to Turkey.

The petitioners calculated a constructed value (CV) using the same COM, packing and SG&A figures used to compute the Turkish home market costs for pasta. The petitioners also added to CV an amount for profit. To calculate profit, the petitioners relied on 1993 audited financial statements reported by a major Italian producer. Although the petitioners demonstrated significant efforts in attempting to obtain Turkish specific financial data for the pasta and food processing industries, we do not consider the profit of an Italian pasta producer an acceptable alternative. For purposes of this initiation, we have rejected the estimated margin based on CV, and have instead relied solely on the comparison of export price to the home market price above COP.

Based on this comparison of export price to normal value, the estimated dumping margin for certain pasta from Turkey is 63.29 percent.

Fair Value Comparisons

Based on the data provided by the petitioners, there is reason to believe that imports of certain pasta from Italy and Turkey are being, or likely to be, sold at less than fair value. If it becomes necessary at a later date to consider the petition as a source of facts available, we may review the calculations.

Initiation of Investigations

We have examined the petition on certain pasta from Italy and Turkey and have found that it meets the requirements of section 732 of the Act, including the requirements concerning allegations of material injury or threat of material injury to the domestic producers of a domestic like product by reason of the complained-of imports, allegedly sold at less than fair value. Therefore, we are initiating antidumping duty investigations to determine whether imports of certain pasta from Italy and Turkey are being, or are likely to be, sold in the United States at less than fair value. Unless extended, we will make our preliminary determinations by October 19, 1995.

Distribution of Copies of the Petition

In accordance with section 732(b)(3)(A) of the Act, copies of the public versions of the petition have been provided to the representatives of the governments of Italy and Turkey. We will attempt to provide copies of the public versions of the petition to all the exporters named in the petition.

International Trade Commission (ITC) Notification

We have notified the ITC of our initiations, as required by section 732(d) of the Act.

Preliminary Determination by the ITC

The ITC will determine by June 26, 1995, whether there is a reasonable indication that imports of certain pasta from Italy and Turkey are causing material injury, or threatening to cause material injury, to a U.S. industry. A negative ITC determination in either investigation will result in the respective investigation being terminated; otherwise, these investigations will proceed according to statutory and regulatory time limits.

Dated: June 1, 1995.

Susan G. Esserman,

Assistant Secretary for Import Administration.

[FR Doc. 95–13982 Filed 6–7–95; 8:45 am]

BILLING CODE 3510–DS–P

[A–301–602]

Certain Fresh Cut Flowers From Colombia; Preliminary Results of Antidumping Duty Administrative Review, Partial Termination of Administrative Reviews, and Notice of Intent To Revoke Order (In Part)

AGENCY: Import Administration, International Trade Administration, Department of Commerce.

ACTION: Notice of preliminary results of antidumping duty administrative reviews, partial termination of administrative reviews, and notice of intent to revoke in part the antidumping duty order.

SUMMARY: In response to requests from interested parties, the Department of Commerce (the Department) is conducting three concurrent administrative reviews of the antidumping duty order on certain fresh cut flowers from Colombia. These reviews cover a total of 336 producers and/or exporters of this merchandise to the United States for at least one of the following periods: March 1, 1991 through February 29, 1992; March 1, 1992 through February 28, 1993; and March 1, 1993 through February 28, 1994. The reviews indicate the existence of dumping margins for certain firms during the relevant periods.

We are terminating the administrative reviews with respect to 18 producers/exporters, because the Department either received timely withdrawal of review requests from these firms, or the firms were no longer subject to the order due to exclusion or revocation actions taken by the Department. We are also announcing our intent to revoke the antidumping duty order for the following exporters/growers: Cultivos Miramonte, Flores Aurora, the Funza Group, and Industrial Agricola. We determined that these firms have not sold the subject merchandise at less than foreign market value (FMV) in these reviews and for at least three consecutive administrative review periods, and these firms have submitted certifications that they will not sell at less than FMV in the future.

We have preliminarily determined that sales have been made below the FMV. If these preliminary results are adopted in our final results of administrative review, we will instruct U.S. Customs to assess antidumping duties equal to the difference between the United States price (USP) and the FMV.

We invite interested parties to comment on these preliminary results and intent to revoke.

EFFECTIVE DATE: June 8, 1995.

FOR FURTHER INFORMATION CONTACT: J. David Dirstine or Richard Rimlinger, Office of Antidumping Compliance, Import Administration, International Trade Administration, U.S. Department of Commerce, 14th Street and Constitution Avenue, N.W., Washington, D.C. 20230; telephone (202) 482–4733.

SUPPLEMENTARY INFORMATION:

Background

On March 5, 1992, March 12, 1993, and March 4, 1994, the Department published notices in the **Federal Register** of ''Opportunity to Request Administrative Review'' (57 FR 7910, 58 FR 13583, and 59 FR 10368, respectively) of the antidumping duty order on certain fresh cut flowers from Colombia. On May 21, 1992, May 28, 1993, and May 2, 1994, in accordance with 19 CFR 353.22(c), we initiated administrative reviews of this order for over 500 Colombian firms covering the periods March 1, 1991 through February 29, 1992 (the 5th review), March 1, 1992 through February 28, 1993 (the 6th review), and March 1, 1993 through February 28, 1994 (the 7th review), respectively (*see* 57 FR 21643, 58 FR 31010, and 59 FR 22579, respectively).

On May 9, 1994, the Department notified interested parties of its decision to collapse these three reviews for the record, and to conduct the three reviews concurrently. *See* Memorandum To File dated May 9, 1994.

We have preliminarily determined to revoke the antidumping duty order for the following exporters/growers: Cultivos Miramonte, Flores Aurora, the Funza Group, and Industrial Agricola. These firms have submitted requests in accordance with 19 CFR 353.25(b) to revoke the order with respect to their sales of flowers to the United States. Their requests were accompanied by certifications that they have not sold flowers to the United States at less than FMV for at least a three-year period, including the subject review periods, and will not do so in the future. Since we preliminarily determine that these firms have not sold the subject merchandise at less than FMV in these reviews, and have not sold the subject merchandise at less than FMV for at least the required three-year period, we intend to revoke the order with respect to these companies.

The Department has now conducted the administrative reviews in accordance with section 751 of the Tariff Act of 1930, as amended (the Tariff Act).

Scope of Review

Imports covered by these reviews are shipments of certain fresh cut flowers from Colombia (standard carnations, miniature (spray) carnations, standard chrysanthemums and pompon chrysanthemums). These products are currently classifiable under item numbers 0603.10.30.00, 0603.10.70.10, 0603.10.70.20, and 0603.10.70.30 of the Harmonized Tariff Schedule (HTS). The HTS item numbers are provided for convenience and Customs purposes. The written description remains dispositive.

Although we initiated reviews on over 500 firms, we have actually reviewed a total of 336 firms for at least one of the three review periods.

There was one firm, Agroteusa, which was not included in our initiation notices but was included in these reviews because of its close relationship to another firm for which reviews were initiated.

Subsequent to the publication of our initiation notices, we received timely withdrawals of requests for Agricola Sagasuca (6th and 7th reviews), Daflor Ltda. (7th review), Flores el Tandil Ltda. (7th review), Industrial Agricola (7th review), the Santana Flowers Group

(consisting of Hacienda Curubital, Inversiones Istra, and Santana Flowers) (7th review), and Velez de Monchaux e Hijos y Cia (6th review). Because there were no other requests for review for the companies and administrative review periods indicated above from any other interested parties, we are terminating these particular reviews with respect to these companies in accordance with 19 CFR 353.22(a)(5).

We are also terminating the 5th and 6th administrative reviews initiated for the Flores Colombianas Group (including Agrosuba Ltda., Flores Colombianas, Jardines de los Andes S.A., and Productos de Cartucho S.A.) and Flores Condor, because these firms were subsequently revoked from the antidumping order in an earlier review. Moreover, we are terminating the 5th and 6th administrative reviews with respect to Flores Timana Ltda., because this firm was originally excluded from the order, and these reviews should not have been initiated.

In addition, at the request of the petitioner, we initiated reviews for Agriflora (5th, 6th, and 7th reviews), Elite Farms (7th review), Emerald Farms (7th review), and Comercializadora Caribbean (7th review). The first three firms have informed us that they are flower importers, and the last firm informed us that it is a freight facilitator. Consequently, we are preliminarily terminating the reviews with respect to these four firms.

During the course of these reviews, we learned that several respondents were sufficiently related for us to collapse these firms, or group of firms, into one entity for purposes of calculating a dumping rate. The firms we considered one entity are: (1) Agricola las Cuadras and Flores de Hacaritama; (2) Agricola de la Fontana, Flores de Hunza, Flores Tibati, and Inversiones Cubivan; (3) Cultivos Miramonte S.A. and Flores Mocari S.A.; (4) Agricola Guacari S.A., Flores Altamira S.A., Flores de Exportacion S.A., Flores de Salitre, Four Farmers Inc, S.B. Talee, and Santa Helena S.A.; (5) MG Consultores, Flores Canelon, Flores la Valvanera, Flores del Hato, Agroindustrial del Riofrio, Jardines de Chia, Queen's Flowers de Colombia, and Jardines Fredonia (this group is hereinafter referred to as the ''Queen's Flowers Group''). *See* Memorandum to File ''Collapsing Related Parties'': Farm Fresh Flowers Group, dated November 14, 1994; Florex Group, dated November 15, 1994, and November 21, 1994; Miramonte Group, dated November 15, 1994; and Queen's Flowers Group, dated November 17, 1994, and January 10, 1995[1]. In the previous review covering the period March 1, 1990 through February 28, 1991, we also collapsed (1) Agricola Las Cuadras and Flores Hacaritama (2) Agricola Guacari S.A., Flores Altamira S.A., Flores de Exportacion S.A., Four Farmers Inc, and Santa Helena S.A., and (3) Jardines de Chia, Queen's Flowers de Colombia, and Jardines Fredonia.

Finally, we initiated reviews for a large number of firms which could not be located in spite of our requests for assistance from such diverse sources as the Floral Trade Council (the FTC), Asocolflores, the American Embassy in Bogotá, and the U.S. Customs Service. Therefore, we were unable to conduct administrative reviews for these firms, and any entries into the United States on the part of these firms will continue to be assessed duties equal to the ''all others'' rate of 3.10 percent from the less-than-fair-value (LTFV) investigation. The firms in question are:

Achalay
Agricola Altiplano
Agricola de Los Alisos Ltda.
Agricola de Occidente
Agricola del Monte
Agricola Megaflor Ltda.
Agrocaribu Ltd.
Agro de Narino
Agroindustrial Madonna, S.A.
Agroindustrias de Narino Ltda.
Agropecuaria la Marcela
Agropecuaria Mauricio
Agrocosas
Agrotabio Kent
Aguacarga
Alcala
Alstroflores Ltda.
Amoret
Andalucia
Ancas Ltda.
A.Q.
Arboles Azules Ltda.
Caico
Carcol Ltda.
Classic
Clavelez
Coexflor
Color Explosion
Consorcio Agroindustrial Columbiano S.A. ''CAICO''
Cota
Crest D'or
Crop S.A.
Cultivos Guameru
Cypress Valley
Degaflor
Del Monte
Del Tropico Ltda.
Disagro Ltda.
Diveragricola
El Dorado
Elite Flowers
El Milaro
El Tambo
El Timbul Ltda.
Euroflora
Exoticas
Exotic Flowers
Exotico
Exportadora
F. Salazar
Ferson Trading
Flamingo Flowers
Flor y Color
Flores Abaco, S.A.
Flores Agromonte
Flores Ainsus
Flores Alcala Ltda.
Flores Calichana
Flores Cerezangos
Flores Corola
Flores de Guasca
Flores de Iztari
Flores de Memecon/Corinto
Flores de la Cuesta
Flores de la Hacienda
Flores de la Maria
Flores del Cielo Ltda.
Flores del Cortijo
Flores del Tambo
Flores el Talle Ltda.
Flores Flamingo Ltda.
Flores Fusu
Flores Gloria
Flores la Cabanuela
Flores la Pampa
Flores la Union/Santana
Flores Montecarlo
Flores Palimana
Flores Saint Valentine
Flores San Andres
Flores Santana
Flores Sausalito
Flores Sindamanoi
Flores Suasuque
Flores Tenerife Ltda.
Flores Urimaco
Flores Violette
Florexpo
Floricola
Floricola la Ramada Ltda.
Florisol
Florpacifico
Flower Factory
Flowers of the World/Rosa
Four Seasons
Fracolsa
Fresh Flowers
Garden and Flowers, Ltda.
German Ocampo
Granja
Gypso Flowers
Hacienda La Embarrada
Hacienda Matute
Hana/Hisa Group
  Flores Hana Ichi de Colombia Ltda.
  Flores Tokai Hisa

[1] In these memos, we collapsed an additional 12 companies into the Queen's Flowers Group. However, for purposes of these preliminary results, we are considering only these eight companies as one entity.

Hernando Monroy
Hill Crest Gardens
Horticultura de la Sasan
Horticultura Montecarlo
Illusion Flowers
Indigo S.A.
Industria Santa Clara
Industrial Terwengel, Ltda.
Innovacion Andina, S.A.
Inversiones Bucarelia
Inversiones Maya, Ltda.
Inversiones Playa
Inversiones & Producciones Tecnicas
Inversiones Silma
Inversiones Sima
Jardin de Carolina
Jardines Choconta
Jardines Darpu
Jardines de Los Andes
Jardines de Timana
Jardines Natalia Ltda.
Jardines Tocarema
J.M. Torres
Karla Flowers
Kingdom S.A.
La Colina
La Embairada
La Flores Ltda.
La Floresta
Laura Flowers
L.H.
Loma Linda
Loreana Flowers
M. Alejandra
Mauricio Uribe
Merastec
Morcoto
Nasino
Olga Rincon
Otono
Pinar Guameru
Piracania
Prismaflor
Reme Salamanca
Rosa Bella
Rosales de Suba Ltda.
Rosas y Jardines
Rose
San Ernesto
San Valentine
Sarena
Select Pro
Shila
Solor Flores Ltda.
Starlight
Sunbelt Florals
Susca
The Rose
Tomino
Tropical Garden
Villa Diana
Zipa Flowers

Best Information Available

In accordance with section 776(c) of the Tariff Act, we have preliminarily determined that the use of best information otherwise available (BIA) is appropriate for certain firms. In determining what is BIA, our regulations provide that we may take into account whether a party refuses to provide information (19 CFR 353.37(b)). For purposes of these reviews, we have used the most adverse BIA—generally, the highest rate for any company for this same class or kind of merchandise from this or any prior segment of the proceeding—whenever a company refused to cooperate with the Department or otherwise significantly impeded the proceeding. When a company substantially cooperated with our requests for information, but failed to provide all the information requested in a timely manner or in the form requested, we used as BIA the higher of (1) the highest rate (including the ''all others'' rate) ever applicable to the firm for the same class or kind of merchandise from the same country from either the LTFV investigation or a prior administrative review; or (2) the highest calculated rate in this review for any firm for the same class or kind of merchandise from the same country. *See Antifriction Bearings (Other Than Tapered Roller Bearings) and Parts Thereof From the Federal Republic of Germany, et al.; Final Results of Antidumping Duty Administrative Review,* 56 FR 31692, 31704 (July 11, 1991); *see also Allied-Signal Aerospace Co. v. United States,* 996 F.2d 1185 (Fed. Cir. 1993).

Because a number of firms failed to respond to our requests for information, we have used the highest rate ever found in this proceeding to establish their margins. This rate is 75.92 percent for the 5th administrative review and 83.61 percent for the 6th and 7th administrative reviews. The firms that have received adverse BIA rates and the review periods for which these firms are receiving a BIA rate (as indicated in parentheses) are:

Agricola Jicabal (5,6,7)
Agricola Malqui (5,6,7)
Agricola Monteflor Ltda. (7)
Agrobloom Ltda. (7)
Agrokoralia (5,6,7)
Bali Flowers (7)
Bloomshares (7)
Bogota Flowers (5,6,7)
Ciba Geigy (5,6,7)
Claveles Tropicales (7)
Colony International Farm (5,6,7)
Conflores Ltda. (5,6,7)
Cultivos el Lago (5,6,7)
Fernando de Mier (7)
Flora Bellisima (5,6,7)
Flores Alfaya (5,6,7)
Flores Arco Iris (5,6,7)
Flores Balu (7)
Flores Catalina (7)
Flores de Fragua (7)
Flores de la Pradera Ltda. (5,6,7)
Flores del Pradro (7)
Flores el Majui (7)
Flores Guaicata Ltda. (5,6,7)
Flores Magara
Flores Naturales (7)
Flores Petaluma Ltda.(5,6,7)
Flores Rio Grande (7)
Flores Santa Lucia (5,6,7)
Flores Suesca (5,6)
Flores Tejas Verdes (5,6,7)
Fribir Ltda. (7)
Groex S.A. (5,6)
Hacienda Susata (7)
Inpar (5,6,7)
Inter Flores (7)
Interflora Ltda. (5,6,7)
Internacional Flowers (7)
Invernavas (5,6,7)
Inversiones del Alto (7)
Inversiones Nativa Ltda. (5,6,7)
Jardin (5,6,7)
Jardines del Muna (5,6,7)
La Florida (5,6,7)
My Flowers Ltda. (7)
Naranjo Exportaciones e Importaciones (7)
Plantas Ornamentales de Colombia S.A. (7)
Rosas y Flores (5,6,7)
Rosicler Ltda. (5,6,7)
Sabana Flowers (5,6,7)
Sunset Farms (5,6,7)
Tempest Flowers (5,6,7)

As previously discussed under the *Scope of Review* section of this notice, we have preliminarily determined that eight flower companies are significantly related to each other to warrant collapsing their sales and production information into the Queen's Flowers Group. Although these companies provided responses to our questionnaire and supplemental questionnaires, we did not receive complete information regarding the interrelationships between these companies. In addition, one firm had purchased major inputs from other members of the group but failed to provide requested information establishing the arm's-length nature of these transactions. Other members of the group failed to identify their suppliers of inputs when requested to do so. Another firm claimed it had no transactions with two particular customers, both members of the group; however, there is information on the record from these customers indicating that they had purchased subject merchandise from this firm during the POR. Moreover, several companies failed to notify the Department that they had included shared administrative expenses in their constructed value response. Finally, one company improperly amortized certain production expenses in an optional crop adjustment methodology and failed to

correct the problem in response to a supplemental questionnaire. These problems precluded the Department from merging sales and constructed value data to form one consolidated response for these related entities. Therefore, we preliminarily determine that the members of the Queen's Flowers Group have significantly impeded our reviews and we have used as uncooperative, or first-tier, BIA, the highest rate for any company for this same class or kind of merchandise from this or any prior segment of the proceeding.

Based on the responses provided by these eight respondents, we believe that there are an additional 12 companies with strong ties to the Queen's Flowers Group. We are giving these 12 companies an opportunity to respond to our questionnaire. Since these companies were not included in our ''Notice of Initiation,'' there will not be a preliminary margin applicable to these companies. If, however, in our final results of review, we conclude that any or all of these companies are significantly related to the Queen's Flowers Group to be considered to be one entity, the rates for the group will apply to these companies as well.

Two firms, Agricola Uzatama and Proflores Ltda., responded to our original questionnaire, but failed to respond to our requests for supplemental information. We preliminarily determine that these companies have not cooperated with our requests for information. Therefore, we have preliminarily applied a first-tier BIA rate to these firms for the seventh review, which is 83.61 percent, the highest rate for any firm in any segment of this proceeding.

Although Iturrama and Santa Helena submitted responses to our supplemental questionnaires, these firms failed to provide information allowing us to correct serious deficiencies in their cost responses. Therefore we were unable to use their cost data for comparison purposes. However, because these firms substantially cooperated with our requests for information, we have preliminarily applied a cooperative, or second-tier, BIA rates to sales made by these companies.

Flores el Zorro, Ltda., substantially cooperated with our requests for information and provided complete sales and cost data for its U.S. sales. However, the data provided by Flores el Zorro contained numerous problems and deficiencies (specifically in the areas of indirect selling expenses incurred in the United States, indirect selling expenses incurred in the home market, financial expenses, and financial income). Since insufficient information was placed on the record by Flores el Zorro to correct these problems and we were unable to use the firm's response to make comparisons because of the existing deficiencies, we have preliminarily applied second-tier BIA rates to sales made by Flores el Zorro for all three reviews.

We conducted verification of responses submitted by the Agrodex Group, Cultivos Miramonte, Floralex, Flores Aurora, Flores Depina, the Funza Group, Flores de la Vereda, Flores Juanambu, the Florex Group, the Guacatay Group, the HOSA Group, Industrial Agricola, the Santana Group, Senda Brava, and the Tinzuque Group. We encountered serious verification problems with respect to Flores de la Vereda and Floralex. During the verification of Flores de la Vereda, we could not successfully verify completeness and accuracy of the company's sales data. Also, during the verification of Floralex, we were unable to verify the accuracy of the constructed value information submitted by this firm. Because Flores de la Vereda and Floralex have substantially cooperated with our requests for information, we have preliminarily applied a second-tier BIA rate to these firms for all three reviews.

Also, we are applying a second-tier BIA rate to sales made by Colflores, Flores Estrella, Flores Mountgar, and Flor Colombia S.A. These firms are no longer in business, and we have preliminarily determined, in accordance with the standards enunciated in *Certain Fresh Cut Flowers From Colombia; Final Results of Antidumping Duty Administrative Review, and Notice of Revocation of Order (in Part),* 59 FR 15159 (March 31, 1994), that they are unable to respond to the Department's questionnaire.

In certain situations, we found it necessary to use partial BIA for a number of firms to correct for more limited response deficiencies. In a supplemental questionnaire, Flores de Aposentos reported aggregate carnation sales totals made through resellers which it knew were destined for sale in the United States. Since these sales were not broken down in the company's response as required by the Department's questionnaire, we applied the BIA rate for cooperative firms and limited its application to the particular sales involved.

In the case of Las Amalias, we found that the firm had reported its sales prices to a related importer for certain U.S. sales transactions instead of its sales prices to the first unrelated U.S. customer as required by our questionnaire. We applied the BIA rate for cooperative firms to these particular transactions.

United States Price

Pursuant to section 777A of the Tariff Act, we determined that it was appropriate to average U.S. prices on a monthly basis in order (1) to use actual price information that is often available only on a monthly basis, (2) to account for large sales volumes, and (3) to account for perishable product pricing practices (*see Final Results of Antidumping Duty Administrative Review; Certain Fresh Cut Flowers from Colombia* (56 FR 50554, October 7, 1991)).

In calculating USP, we used purchase price when sales were made to unrelated purchasers in the United States prior to the date of importation, or exporter's sales price (ESP) when sales were made to unrelated purchasers in the United States after the date of importation, both pursuant to section 772 of the Tariff Act.

We calculated purchase price based on the packed price to the first unrelated purchaser in the United States. The terms of purchase price sales were either f.o.b. Bogotá or c.i.f. Miami. We made deductions, where appropriate, for foreign inland freight, air freight, brokerage and handling, U.S. customs duties, and return credits.

ESP, for sales made on consignment or through a related affiliate, was calculated based on the packed price to the first unrelated customer in the United States. We made adjustments, where appropriate, for foreign inland freight, brokerage and handling, air freight, box charges, credit expenses, returned merchandise credits, royalties, U.S. duty, and either commissions paid to unrelated U.S. consignees or indirect U.S. selling expenses of related consignees.

Foreign Market Value

Section 733(a)(1)(A) of the Tariff Act requires the Department to compare sales in the United States with viable home market sales of such or similar merchandise sold in the home market or a third-country market in the ordinary course of trade. Although some companies reported either viable home or third-country markets for sales of particular flower types, consistent with our discussion in *Certain Fresh Cut Flowers from Colombia; Final Results of Antidumping Duty Review, and Notice of Revocation of Order (in Part)* (59 FR 15159, March 31, 1994), we have concluded that home market and third-

country sales are not an appropriate basis for FMV.

The FTC, representing domestic parties in this proceeding, argues that most of the conditions on which the above decision was based have changed with respect to third-country sales for these reviews. The FTC claims that sales by Colombian growers to third countries have increased, and the FTC argues that Colombian growers now have greater, unrestricted access to third-country markets, resulting in more stable annual sales to those countries. Also, the FTC argues, this increase in third-country demand for Colombian-grown flowers has affected the production decisions of the Colombian growers and has helped to lessen the seasonal disparities in market demand.

Based on our review of the questionnaire responses and other data on the record, we have preliminarily concluded that the conditions which governed sales in third countries have not changed significantly between our last review and the current reviews. While we have found that Colombian flower producers enjoy greater access and sales to third-country markets, we find that the other conditions on which we based our original decision to disregard third-country sales as a basis for FMV still apply.

Although the petitioner argues that holidays in third countries coincide with holidays in the United States, we find that, with a few exceptions, such as Christmas, this is not the case. For example, there are no flower-giving holidays in third countries that coincide with Valentine's Day or Mother's Day, and there are no United States flower-giving holidays that coincide with All Souls Day.

We find that the market patterns differ greatly between third countries and the United States. The United States market is extremely volatile, and can experience great price swings depending on the season and whether there is a holiday. For example, flower prices on Valentine's Day can increase by more than one hundred percent. This is because United States consumers tend to purchase flowers only on special occasions. On the other hand, third-country customers, particularly those in Europe, tend to purchase flowers more for everyday use. Therefore, demand and prices are much more stable in Europe than in the United States. While price swings do exist, they do not occur on the same order of magnitude as in the United States.

We find the FTC's argument that the correlation between flower prices in the United States and in Europe justify the use of third-country prices as FMV to be unconvincing. While the charts submitted by the FTC in support of its argument indicate that there is a correlation between flower prices in Miami, Florida, and flower prices in Europe, we find the correlation to be weak, and we observed that prices in the two markets moved in the opposite direction in approximately half of the months of the year. The FTC also alleges that the prices of flowers in California more closely correlate with the prices in Europe. While the charts petitioner submitted indicate a moderate correlation, we again observed that Californian and European prices moved in opposite directions in nearly half of the months out of the year. Also, the vast majority of Colombian flowers enter the United States in Miami, Florida, and are sold there. In addition, we noted that the information submitted by the FTC is for only one flower type and only covered part of the 5th review period.

For these reasons, we have not used third-country sales as the basis for FMV. Instead, we used constructed value as defined in section 773(e) of the Tariff Act for all companies. The constructed value represents the average per-flower cost for each type of flower, based on the costs incurred to produce that type of flower over each review period.

The Department used the materials, fabrication, and general expenses reported by respondents. The per-unit average constructed value was based on the quantity of export quality flowers sold by the grower/exporter to the United States. We consider non-export quality flowers (culls) which are produced in conjunction with export quality flowers to be by-products. Therefore, revenue from the sales of culls was used as an offset against the cost of producing the export quality flowers.

For cases in which actual general expenses exceeded the statutory minimum of 10 percent of the cost of materials and fabrication, we used the actual general expenses to calculate constructed value. For cases in which actual general expenses were less than the statutory minimum of 10 percent of the cost of materials and fabrication, we used the statutory minimum of 10 percent. Because imputed credit was included in constructed value, we reduced the actual interest expense reported in the companies' financial statements to prevent double-counting.

When respondents indicated that the actual profit for merchandise of the same general class or kind could not be calculated or was less than eight percent of the sum of the cost of production and general expenses, the Department used the eight percent statutory minimum for profit. We added U.S. packing to constructed value. Adjustments to constructed value were made for credit and indirect selling expenses.

Finally, according to the 1993 edition of *Doing Business in Colombia,* published by Price Waterhouse, there has been a change in the Colombian generally accepted accounting practices effective January 1, 1992. Firms are now required to revalue certain financial statement accounts in order to reflect the effects of inflation experienced during each financial reporting period. As part of this revaluation, firms must restate their fixed asset accounts and their corresponding depreciation expense. Respondents' restated depreciation expenses are not reflected in the constructed value calculations used in our preliminary results. We intend, however, to ask respondents to provide additional data to allow us to make this adjustment for our final results. We invite comments from interested parties on this matter.

Preliminary Results of Review

As a result of our comparison of USP with FMV, we preliminarily determine the margins for the 5th, 6th, and 7th administrative reviews to be:

Producer/exporter	5th	6th	7th
Abaco Tulipanex de Colombia	(1)	(1)	(1)
Agrex de Oriente	(2)	(2)	(1)
AGA Group	(2)	(2)	9.03
Agricola la Celestina			
Agricola la Maria			
Agricola Benilda Ltda			
Agricola Acevedo Ltda	0.96	4.38	1.89
Agricola Arenales Ltda	2.98	2.67	2.10
Agricola Benilda	(1)	(1)	8.78
Agricola Bonanza Ltda	(1)	(1)	(1)

Producer/exporter	5th	6th	7th
Agricola Circasia Ltda	14.21	0.41	1.29
Agricola el Cactus	2.21	1.70	1.16
Agricola el Redil	0.46	0.37	0.42
Agricola Guali S.A	(1)	(1)	(1)
Agricola Jicabal	75.92	83.61	83.61
Agricola la Corsaria	4.85	2.89	1.78
Agricola las Cuadras Group	1.71	3.87	1.44
Agricola Las Cuadras Ltda			
Flores de Hacaritama			
Agricola La Siberia	(2)	(2)	26.94
Agricola Malqui	75.92	83.61	83.61
Agricola Monteflor Ltda	(2)	(2)	83.61
Agricola Uzatama	(2)	(2)	83.61
Agricola Yuldama	(2)	(2)	(1)
Agrobloom Ltda	(2)	(2)	83.61
Agrodex Group	0.90	0.17	1.00
Agricola El Retiro Ltda			
Agricola Los Gaques Ltda			
Agrodex Ltda			
Degaflores Ltda			
Flores Camino Real Ltda			
Flores de la Comuna Ltda			
Flores De Las Mercedes Ltda			
Flores De Los Amigos Ltda			
Flores De Los Arrayanes Ltda			
Flores De Mayo Ltda			
Flores Del Gallinero Ltda			
Flores Del Potrero Ltda			
Flores Dos Hectareas Ltda			
Flores De Pueblo Viejo Ltda			
Flores El Puente Ltda			
Flores El Trentino Ltda			
Flores La Conejera Ltda			
Flores Manare Ltda			
Florlinda Ltda			
Inversiones Santa Rosa ARW Ltda			
Horticola El Triunfo			
Horticola Montecarlo Ltda			
Agroindustrial Don Eusebio Group	4.03	1.68	1.30
Agroindustrial Don Eusebio Ltda			
Celia Flowers			
Passion Flowers			
Primo Flowers			
Temptation Flowers			
Agrokoralia	75.92	83.61	83.61
Agromonte Ltda	7.51	1.40	2.10
Agropecuria Cuernavaca Ltda	2.59	4.59	1.70
Aspen Gardens Ltda	(2)	(2)	12.28
Astro Ltda	(1)	20.25	20.59
Bali Flowers	(2)	(2)	83.61
Becerra Castellanos y Cia	2.86	0.29	64.05
Bloomshare	(2)	(2)	83.61
Bogota Flowers	75.92	83.61	83.61
Bojaca Group	75.92	19.96	0.21
Agricola Bojaca			
Universal Flowers			
Flores Y Plantas Tropicales			
Caicedo Group	0.19	2.53	8.64
Agro Bosque, S.A			
Aranjuez S.A			
Exportaciones Bochica S.A			
Floral Ltda			
Flores Del Cauca			
Inversiones Targa Ltda			
Productos El Zorro			
Cantarrana Group	1.74	4.89	1.07
Cantarrana Ltda			
Agricola Los Venados Ltda			
Ciba Geigy	75.92	83.61	83.61
Cienfuegos Group	5.14	2.75	6.15
Cienfuegos Ltda			
Flores La Conchita			
Cigarral Group	4.97	36.16	45.90

Producer/exporter	5th	6th	7th
Flores Cigarral			
Flores Tayrona			
Claveles Colombianas Group	5.74	3.80	4.42
Claveles Colombianos Ltda			
Fantasia Flowers Ltda			
Splendid Flowers Ltda			
Sun Flowers Ltda			
Claveles De Los Alpes Ltda	0.96	6.38	3.77
Claveles Tropicales de Colombia	(2)	(2)	83.61
Colflores	75.92	83.61	83.61
Colibri Flowers Ltda	3.19	2.05	2.93
Colony International Farm	75.92	83.61	83.61
Combiflor	(2)	(2)	0.37
Conflores Ltda	75.92	83.61	83.61
Cultiflores Ltda	(2)	0.00	5.51
Cultivos el Lago	75.92	83.61	83.61
Cultivos Medellin Ltda	4.51	0.02	3.47
Cultivos Miramonte Group	0.27	0.10	0.11
Cultivos Miramonte S.A			
Flores Mocari S.A			
Cultivos Tahami Ltda	3.90	0.06	1.08
Daflor Ltda	0.16	0.31	(2)
De la Pava Guevara e Hijos Ltda	(1)	(1)	(1)
Dianticola Colombiana Ltda	2.59	22.23	8.16
Dynastry Roses Ltda	(2)	(2)	(1)
El Antelio S.A	(2)	(2)	(1)
Envy Farms Group	(2)	(2)	0.00
Envy Farms			
Flores Marandua Ltda			
Expoflora Ltda	(1)	(1)	(1)
Exporosas	(2)	(2)	(1)
Falcon Farms De Colombia S.A (formerly Flores de Cajibio Ltda.).	0.00	0.00	0.13
Farm Fresh Flowers Group	1.30	0.72	1.49
Agricola de la Fontana			
Flores de Hunza			
Flores Tibati			
Inversiones Cubivan			
Fernando de Mier	(2)	(2)	83.61
Flor Colombiana S.A	(2)	(2)	64.05
Flora Bellisima Ltda	75.92	83.61	83.61
Flora Intercontinental	(1)	(1)	(1)
Floralex Ltda	75.92	83.61	83.61
Florandia Herrera Camacho y Cia	(1)	(1)	(1)
Floraterra Group	17.31	5.37	9.04
Flores Casablanca S.A			
Flores San Mateo S.A			
Siete Flores S.A			
Floreales Group	(1)	8.93	4.56
Floreales			
Kimbaya			
Florenal (Flores el Arenal) Ltda	0.62	13.89	7.70
Flores Acuarela S.A	(1)	(1)	(1)
Flores Aguila	0.02	(1)	(1)
Flores Ainsuca Ltda	(2)	(2)	2.74
Flores Alfaya Ltda	75.92	83.61	83.61
Flores Andinas	(1)	(1)	(1)
Flores Arco Iris	75.92	83.61	83.61
Flores Aurora Ltda	0.03	0.31	0.01
Flores Bachue	(1)	(1)	(1)
Flores Balu	(2)	(2)	83.61
Flores Carmel S.A	(2)	(2)	2.24
Flores Catalina	(2)	(2)	83.61
Flores Colon Ltda	0.90	1.96	1.08
Flores Comercial Bellavista Ltda	2.40	0.20	1.75
Flores de Aposentos Ltda	(2)	(2)	2.83
Flores de Fragua	(2)	(2)	83.61
Flores de la Montana	6.27	0.14	4.51
Flores de la Parcelita	(1)	(1)	(1)
Flores de la Pradera	75.92	83.61	83.61
Flores de la Sabana S.A	7.43	1.10	1.54
Flores de la Vega Ltda	3.09	0.18	1.50
Flores de la Vereda	75.92	83.61	83.61
Flores del Campo Ltda	4.95	3.85	4.51

Producer/exporter	5th	6th	7th
Flores del Lago Ltda	3.74	0.14	1.55
Flores del Pradro	(2)	(2)	83.61
Flores del Rio Group	0.15	5.03	4.16
Agricola Cardenal S.A			
Flores Del Rio S.A			
Indigo S.A			
Flores de Oriente	(2)	(2)	3.31
Flores Depina Ltda	8.95	0.00	7.65
Flores de Serrezuela Ltda	1.23	0.26	0.13
Flores de Suba	8.63	3.10	5.37
Flores de Tenjo Ltda	(1)	(1)	(1)
Flores el Lobo	(2)	14.75	1.59
Flores el Majui	(2)	(2)	83.61
Flores el Molino S.A	0.26	0.94	4.66
Flores el Rosal Ltda	23.77	6.51	2.24
Flores el Zorro Ltda	75.92	83.61	83.61
Flores Estrella	75.92	83.61	(2)
Flores Galia Ltda	(1)	(1)	(1)
Flores Gicro Group	5.82	5.78	5.09
Flores Gicro Ltda			
Flores de Colombia			
Flores Guaicata Ltda	75.92	83.61	83.61
Flores Hacienda Bejucol	(2)	(2)	(1)
Flores Juanambu Ltda	0.69	1.08	1.62
Flores Juncalito Ltda	(1)	(1)	(1)
Flores la Fragrancia	11.03	23.93	11.05
Flores la Gioconda	(2)	(2)	1.99
Flores la Lucerna	(1)	(1)	(1)
Flores la Macarena	(1)	(1)	(1)
Flores la Union/Gomez Arango & Cia	0.37	0.00	0.00
Flores las Caicas	34.46	83.61	42.77
Flores las Mesitas	(2)	(2)	(1)
Flores los Sauces	(2)	(2)	1.35
Flores Magara	(2)	(2)	83.61
Flores Monserrate Ltda	1.49	3.32	1.09
Flores Monteverde Ltda	5.03	3.20	3.42
Flores Mountgar	43.02	83.61	(2)
Flores Naturales	(2)	(2)	83.61
Flores Petaluma Ltda	75.92	83.61	83.61
Flores Ramo Ltda	(1)	(1)	(1)
Flores Rio Grande	(2)	(2)	83.61
Flores S.A	(1)	(1)	(1)
Flores Sagaro	0.17	1.12	2.59
Flores Sairam Ltda	(2)	(2)	(1)
Flores San Carlos	(1)	(1)	(1)
Flores San Juan S.A	(2)	(2)	3.50
Flores Santa Fe Ltda	2.50	3.78	4.07
Flores Santa Lucia	75.92	83.61	83.61
Flores Selectas	(2)	(2)	(1)
Flores Silvestres	2.10	0.09	1.57
Flores (de) Suesca	75.92	83.61	(2)
Flores Tejas Verdes Ltda	75.92	83.61	83.61
Flores Tiba S.A	1.06	2.20	0.09
Flores Tocarinda	0.00	0.25	0.52
Flores Tomine Ltda	1.17	0.00	1.17
Flores Tropicales (Happy Candy) Group	1.25	4.77	6.14
Flores Tropicales Ltda			
Happy Candy Ltda			
Mercedes Ltda			
Rosas Colombianas Ltda			
Florex Group	6.47	6.85	5.47
Agricola Guacari			
Flores Altamira S.A			
Flores de Exportacion S.A			
Santa Helena S.A			
Flores del Salitre Ltda			
S.B. Talee de Colombia			
Floricola La Gaitana S.A	0.02	0.17	0.01
Florimex Colombia Ltda	(2)	(2)	(1)
Floval	(2)	(2)	7.22
Fribir Ltda	(2)	(2)	83.61
Funza Group	0.04	0.25	0.47

Producer/exporter	5th	6th	7th
Flores Alborada			
Flores de Funza S.A			
Flores del Bosque Ltda			
Green Flowers	(2)	(2)	12.57
Groex S.A	75.92	83.61	(1)
Grupo Andes	3.43	0.35	0.22
Cultivos Buenavista Ltda			
Flores De Los Andes Ltda			
Flores Horizante Ltda			
Inversiones Penas Blancas Ltda			
Grupo el Jardin	(2)	(2)	0.40
Agricola el Jardin Ltda			
La Marotte S.A			
Orquideas Acatayma Ltda			
Guacatay Group	3.00	2.70	3.32
Agricola Guacatay S.A			
Jardines Bacata Ltda			
Hacienda Susata	(2)	(2)	83.61
Horticultura El Molino	(2)	(2)	(1)
Hosa Group	0.65	0.18	1.26
Horticultura De La Sabana S.A			
Innovacion Andina S.A			
Minispray S.A			
HOSA Ltda			
Prohosa Ltda			
Industrial Agricola Ltda	0.39	0.43	(2)
Ingro Ltda	8.23	0.02	1.20
Inpar	75.92	83.61	83.61
Interflora Ltda	75.92	83.61	83.61
Inter Flores Ltda	(2)	(2)	83.61
Internacional Flowers	(2)	(2)	83.61
Invernavas	75.92	83.61	83.61
Inverpalmas	0.90	10.93	3.78
Inversiones Almer Ltda	(1)	(1)	(1)
Inversiones Cota	(2)	(2)	(1)
Inversiones el Bambu Ltda	(1)	(1)	(1)
Inversiones Flores del Alto	(2)	(2)	83.61
Inversiones Morcote	(1)	(1)	(1)
Inversiones Morrosquillo	(2)	(2)	4.73
Inversiones Nativa Ltda	75.92	83.61	83.61
Inversiones Santa Rita Ltda	15.41	17.85	19.05
Inversiones Supala S.A	(2)	3.36	3.23
Inversiones Valley Flowers Ltda	(2)	(2)	29.38
Iturrama S.A	75.92	83.61	83.61
Las Amalias Group	8.89	4.05	2.80
Las Amalias S.A			
Pompones Ltda			
La Fleurette de Colombia Ltda			
Ramiflora Ltda			
Jardin	75.92	83.61	83.61
Jardines de America	(2)	(2)	0.85
Jardines del Muna	75.92	83.61	83.61
La Florida	75.92	83.61	83.61
La Plazoleta Ltda	(1)	(1)	(1)
Linda Colombiana Ltda	1.11	2.11	1.32
Las Flores	(1)	(1)	(1)
Los Geranios Ltda	6.69	0.29	1.19
Luisa Flowers	(2)	(2)	(1)
Manjui Ltda	(2)	0.01	0.06
Maxima Farms Group	0.33	0.64	0.10
Agricola los Arboles S.A			
Polo Flowers			
Rainbow Flowers			
Maxima Farms Inc			
Monteverde Ltda	5.03	3.20	3.42
My Flowers Ltda	(2)	(2)	83.61
Naranjo Exportaciones e Importaciones	(2)	(2)	83.61
Natuflora Ltda./San Martin Bloque B	2.12	1.12	1.49
Oro Verde Group	2.10	1.05	0.19
Inversiones Miraflores S.A			
Inversiones Oro Verde S.A			
Papagayo Group	3.23	9.52	2.11
Agricola Papagayo Ltda.			
Inversiones Calypso S.A			
Petalos De Colombia Ltda	13.63	3.28	2.82

Producer/exporter	5th	6th	7th
Pisochago Ltda	(2)	(2)	8.77
Plantaciones Delta Ltda	(1)	(1)	(1)
Plantas Ornamentales De Colombia S.A	0.02	3.85	83.61
Plantas S.A	(1)	(1)	(1)
Proflores Ltda	(2)	(2)	83.61
Propagar Plantas	(1)	(1)	(1)
Queen's Flowers Group	75.92	83.61	83.61
Queen's Flowers De Colombia Ltda			
Jardines De Chia Ltda			
Jardines Fredonia Ltda			
Agrodindustrial del Rio Frio			
Flores Canelon			
Flores del Hato			
Flores La Valvanera Ltda			
M.G. Consultores Ltda			
Rosaflor	(1)	(1)	(1)
Rosales de Colombia Ltda	(1)	(1)	(1)
Rosalinda Ltda	(2)	(2)	(1)
Rosas de Colombia	(1)	(1)	(1)
Rosas Sabanilla Group	0.22	0.49	0.17
Flores La Colmena Ltda			
Rosas Sabanilla Ltda			
Inversiones La Serena			
Agricola La Capilla			
Rosas y Flores Ltda	75.92	83.61	83.61
Roselandia	(1)	(1)	(1)
Rosex Ltda	(1)	(1)	(1)
Rosicler Ltda	75.92	83.61	83.61
Sabana Flowers	75.92	83.61	83.61
Sansa Flowers	(1)	(1)	(1)
Santa Rosa Group	9.27	7.53	2.38
Flores Santa Rosa Ltda			
Floricola la Ramada Ltda			
Santana Flowers Group	0.26	1.76	(2)
Hacienda Curubital			
Inversiones Istra			
Santana Flowers			
Senda Brava Ltda	13.12	0.00	1.53
Shasta Flowers y Compania Ltda	3.61	0.19	0.00
Siempreviva	(1)	(1)	(1)
Soagro Group	8.66	10.01	3.71
Agricola el Mortino Ltda			
Flores Aguaclara Ltda			
Flores del Monte Ltda			
Flores la Estancia			
Jaramillo y Daza			
Sunset Farms	75.92	83.61	83.61
Superflora Ltda	(2)	(2)	5.58
Sweet Farms	(2)	(2)	(1)
Tag Ltda	0.20	0.56	2.68
Tempest Flowers	75.92	83.61	83.61
The Beall Company	(1)	(1)	(1)
Tinzuque Group	5.26	0.02	0.00
Tinzuque Ltda			
Catu S.A			
Toto Flowers Group	1.19	1.93	0.06
Flores De Suesca S.A			
Toto Flowers			
The Tuchany Group	0.52	0.43	0.55
Tuchany S.A			
Flores Sibate S.A			
Flores Munya S.A			
Flores Tikaya Ltda			
Uniflor Ltda	5.54	0.68	2.75
Velez de Monchaux Group	3.78	4.76	4.51
Velez De Monchaux e Hijos Y			
Cia. S. en C			
Agroteusa			
Victoria Flowers	0.62	2.13	1.61
Villa Cultivos Ltda	(2)	(2)	2.43
Vuelven Ltda	(2)	3.16	2.33

[1] No U.S. sales during this review period.
[2] No review requested for this period.

Parties to the proceeding may request disclosure within 5 days and interested parties may request a hearing not later than 10 days after publication of this notice. Interested parties may submit written arguments in case briefs on these preliminary results within 30 days of the date of publication of this notice. Rebuttal briefs, limited to issues raised in case briefs, may be filed no later than 7 days after the time limit for filing case briefs. Any hearing, if requested, will be held 7 days after the scheduled date for submission of rebuttal briefs. Copies of case briefs and rebuttal briefs must be served on interested parties in accordance with 19 CFR 353.38(e). Representatives of parties to the proceeding may request disclosure of proprietary information under administrative protective order no later than 10 days after the representative's client or employer becomes a party to the proceeding, but in any event not later than the date the case briefs, under 19 CFR 353.38(c), are due. The Department will publish the final results of this administrative review including the results of its analysis of issues raised in any case or rebuttal brief or at a hearing.

Upon completion of the final results in this review, the Department shall determine, and the Customs Service shall assess, antidumping duties on all appropriate entries. Individual differences between USP and FMV may vary from the percentages stated above. The Department will issue appraisement instructions on each exporter directly to the Customs Service.

Furthermore, the following deposit requirements will be effective for all shipments of the subject merchandise entered, or withdrawn from warehouse, for consumption on or after the publication date of the final results of this administrative review, as provided for by section 751(a)(1) of the Tariff Act: (1) The cash deposit rates for the reviewed companies will be those rates established for the last covered period in the final results of these reviews; (2) for previously reviewed or investigated companies not listed above, the cash deposit rate will continue to be the company-specific rate published for the most recent period; (3) if the exporter is not a firm covered in this review, a prior review, or the original LTFV investigation, but the manufacturer is, the cash deposit rate will be the rate established for the most recent period for the manufacturer of the merchandise; and (4) for all other producers and/or exporters of this merchandise, the cash deposit rate shall be 3.10 percent, the adjusted ''all others'' rate from the fair value investigation. These deposit requirements, when imposed, shall remain in effect until publication of the final results of the next administrative reviews.

This notice also serves as a preliminary reminder to importers of their responsibility under 19 CFR 353.26 to file a certificate regarding the reimbursement of antidumping duties prior to liquidation of the relevant entries during these review periods. Failure to comply with this requirement could result in the Secretary's presumption that reimbursement of antidumping duties occurred and the subsequent assessment of double antidumping duties.

These administrative reviews and notice are in accordance with section 751(a)(1) of the Tariff Act (19 U.S.C. 1675(a)(1)) and section 353.22 of the Department's regulations (19 CFR 353.22(c)(5)).

Dated: May 26, 1995.

Susan G. Esserman,

Assistant Secretary for Import Administration.

[FR Doc. 95–14074 Filed 6–7–95; 8:45 am]

BILLING CODE 3510–DS–P

[C–475–819, C–489–806]

Notice of Initiation of Countervailing Duty Investigations: Certain Pasta (''Pasta'') From Italy and Turkey

AGENCY: Import Administration, International Trade Administration, Department of Commerce.

EFFECTIVE DATE: June 8, 1995.

FOR FURTHER INFORMATION CONTACT: Jennifer Yeske (Italy) and Elizabeth Graham (Turkey), Office of Countervailing Investigations, U.S. Department of Commerce, Room 3099, 14th Street and Constitution Avenue, N.W., Washington, DC 20230; telephone (202) 482–0189 and (202) 482–4105, respectively.

Initiation of Investigations

The Applicable Statute

Unless otherwise indicated, all citations to the statute are references to the provisions of the Tariff Act of 1930, as amended by the Uruguay Round Agreements Act effective January 1, 1995 (the Act).

The Petition

On May 12, 1995, the Department of Commerce (the Department) received a petition filed in proper form by Borden Inc., Hershey Foods Corp., and Gooch Foods, Inc. (the petitioners), three U.S. producers of pasta. Supplements to the petition were filed on May 26, 1995, and May 31, 1995.

In accordance with section 701(a) of the Act, petitioners allege that manufacturers, producers, or exporters of the subject merchandise in Italy and Turkey receive countervailable subsidies.

The petitioners state that they have standing to file the petition because they are interested parties, as defined under section 771(9)(C) of the Act.

Determination of Industry Support for the Petition

Section 702(c) of the Act requires the Department to determine, prior to the initiation of an investigation, that a minimum percentage of the domestic industry supports a countervailing duty petition. A petition meets this requirement if (1) domestic producers or workers who support the petition account for at least 25 percent of the total production of the domestic like product; and (2) those domestic producers or workers who support the petition account for more than 50 percent of the production of the domestic like product produced by that portion of the industry expressing support for, or opposition to, the petition.

A review of the production data provided in the petition and other information readily available to the Department indicates that the petitioners account for more than 25 percent of the total production of the domestic like product and for more than 50 percent of that produced by companies expressing support for, or opposition to, the petition. The Department received no expressions of opposition to the petition from any interested party. Accordingly, the Department determines that this petition is supported by the domestic industry.

Injury Test

Because Italy and Turkey are ''Subsidies Agreement Countries'' within the meaning of section 701(b) of the Act, Title VII of the Act applies to this investigation. Accordingly, the U.S. International Trade Commission (''ITC'') must determine whether imports of the subject merchandise from Italy and Turkey materially injure, or threaten material injury to, a U.S. industry.

Scope of the Investigation

The Department has inherent authority to redefine and clarify the scope of an investigation, as set forth in a petition, whenever it determines that the petition language is overly broad, or insufficiently specific to allow proper

investigation, or in any other way defective. *See NTN Bearing Corp.* v. *United States*, 747 F. Supp. 726 (CIT 1990). We revised the petitioners' proposed scope to eliminate channel of trade as a scope criterion in order to ensure that it would be clear and administrable.

The scope of these investigations consists of certain non-egg dry pasta in packages of five pounds (or 2.27 kilograms) or less, whether or not enriched or fortified or containing milk or other optional ingredients such as chopped vegetables, vegetable purees, milk, gluten, diastases, vitamins, coloring and flavorings, and up to two percent egg white. The pasta covered by this scope is typically sold in the retail market in fiberboard or cardboard cartons or polyethylene or polypropylene bags, of varying dimensions.

Excluded from the scope of these investigations are refrigerated, frozen, or canned pastas, as well as all forms of egg pasta, with the exception of non-egg dry pasta containing up to two percent egg white.

The merchandise under investigation is currently classifiable under subheading 1902.19.20 of the *Harmonized Tariff Schedule of the United States* (*HTS*). Although the HTS subheadings are provided for convenience and customs purposes, our written description of the scope of this proceeding is dispositive.

Allegation of Subsidies

Section 702(b) of the Act requires the Department to initiate a countervailing duty proceeding whenever an interested party files a petition, on behalf of an industry, that (1) alleges the elements necessary for an imposition of a duty under section 701(a), and (2) is accompanied by information reasonably available to petitioners supporting the allegations.

Initiation of Countervailing Duty Investigations

The Department has examined the petition on pasta from Italy and Turkey and found that it complies with the requirements of section 702(b) of the Act. Therefore, in accordance with section 702(b) of the Act, we are initiating countervailing duty investigations to determine whether manufacturers, producers, or exporters of pasta from Italy and Turkey receive subsidies.

A. Italy

We are including in our investigation the following programs alleged in the petition to have provided subsidies to producers of the subject merchandise in Italy:

1. *Law 675/77—Capital Grants*
2. *Law 675/77—VAT Reductions*
3. *Laws 227/77, 394/81, and 304/90—Preferential Export Financing and Export Promotion*
4. *Law 64/86—Industrial Investment Development Assistance*
5. *ILOR & IRPEG Tax Exemptions*
6. *Law 345/92—Social Security Exemptions*
7. *Law 1329/65—Interest Contributions Under the Sabatini Law*
8. *Law 181—Urban Redevelopment Packages*
9. *Pasta Export Restitution Program*
10. *European Regional Development Fund (''ERDF'') Aid*
11. *European Social Fund (''ESF'') Aid*
12. *Miscellaneous EU Subsidies*

We are not including in our investigation the following programs alleged to be benefitting producers of the subject merchandise in Italy:

1. Law 675/77—Interest Contributions on Bank Loans, Interest Grants for Loans Financed by IRI Bond Issues, Ministry of Industry Mortgage Loans, and Personnel Retraining Grants

Law 675 has been investigated and found countervailable in prior investigations, *i.e., Final Affirmative Countervailing Duty Determination: Certain Steel from Italy* (58 FR 37327, July 9, 1993 (''*Certain Steel*'') and *Final Affirmative Countervailing Duty Determination: Grain-Oriented Electrical Steel from Italy* (59 FR 18357, April 18, 1994) (''*GOES*''). However, the determination of countervailability in those cases was based on a finding that the automobile and steel industries were dominant users of Law 675 benefits. In *Certain Steel*, the Department verified that the steel and automobile industries together accounted for 66 percent of the total assistance provided under Law 675. The remaining portion of the benefits provided under this law were spread among nine other industries. Petitioners have noted that the agro-food industry is one of the other nine industries which received benefits. However, petitioners have not provided any basis to believe or suspect that the pasta industry, in particular, was a dominant user; nor have they provided any other basis to believe that benefits under this program are specific to the pasta industry. For these reasons, we are not including the above-named portions of Law 675 in our investigation.[1]

2. Law 796/76—Exchange Rate Guarantee Program

Law 796 provides exchange rate guarantees on foreign currency loans obtained under ECSC Article 54 and/or the Council of European Resettlement (''CER'') Fund. This program has been investigated in the past and has been found countervailable on the basis of dominant use by the steel industry (*see, Preliminary Affirmative Countervailing Duty Determination: Oil Country Tubular Goods From Italy*, (59 FR 61870)). In that case, the information provided by the GOI showed that the steel industry received 25 percent of the benefits under this program. Petitioners have alleged that because CER loans are available to agriculture, tourism, and handicraft, pasta producers may have received benefits under this program. However, petitioners have not provided any basis to believe or suspect that the pasta industry, in particular, was a dominant user; nor have they provided any other bases to believe that benefits under this program are specific to the pasta industry. Moreover, in accordance with section 355.43(b)(8) of our *Countervailing Duties: Notice of Proposed Rulemaking and Request for Public Comments*, 54 FR 23366 (May 31, 1989) (*Proposed Regulations*), a program cannot be found specific solely on the basis of being limited to agriculture. Therefore, we are not including this program in our investigation.

Although the Department has withdrawn the *Proposed Regulations*, references to the *Proposed Regulations* are provided for further explanation of the Department's CVD practice.

3. Council of Europe Resettlement (''CER'') Loans

In their discussion of the Exchange Rate Guarantee program, petitioners request that the Department initiate an investigation of CER loans independent of the Exchange Rate Guarantee program to determine whether CER funds are provided at preferential rates or otherwise provide a benefit to recipient companies. However, petitioners have neither provided evidence that CER loans are provided at preferential rates nor provided evidence that these loans are specific to the pasta industry. For these reasons, we are not including CER loans in our investigation.

4. Law 46/82—Research and Development Grants

This program was found to be not countervailable in *GOES*, because benefits under the program are not

[1] Two types of benefits under this program, (*i.e.*, Capital Grants and VAT Reductions) were found in *GOES* to be available only in the Mezzogiorno region of Italy, making them regionally specific. Therefore, we have included those benefits under Law 675 in our investigation, as indicated above.

limited to a specific enterprise or industry or group of enterprises or industries. Petitioners acknowledge this finding, but argue that there is no indication that the Department considered a 1985 amendment to Law 46/82. Specifically, Article 14 of the law was amended at that time to authorize government assistance for several additional agricultural and/or industrial purposes. Innovations in pasta production is one of the newly enumerated purposes. Petitioners also claim that under Article 14 pasta may have received a disproportionate share of the benefits.

Petitioners have not provided a sufficient basis to believe that the program has changed since the determination of non-countervailability in *GOES*. Because the period of investigation for *GOES* was 1992, the Department's specificity analysis did take into account any changes to Law 46/82 made in 1985. In addition, petitioners have not provided a sufficient basis to believe that pasta received a disproportionate share of the benefits under this program. Therefore, we are not including Law 46/82 grants in our investigation.

5. Miscellaneous Italian Government Subsidies

Petitioners have reviewed the annual reports of four Italian pasta producers and noted numerous references to items such as ''subsidies'' which petitioners were unable to link to any alleged programs. Petitioners recognize that many of these items might be covered by programs which have been alleged; however, they request that we investigate them under a separate program of Miscellaneous Italian Government Subsidies.

The allegation does not provide a basis for investigating these as subsidy programs. However, to the extent that our investigation includes the four relevant producers as respondents, we will make appropriate inquiries about the items in question.

6. European Investment Bank (''EIB'') Loans

Petitioners allege that Italian pasta producers may have received countervailable loans from the EIB.

These loans have been investigated in past investigations and, most recently, were found not countervailable in the *Final Affirmative Countervailing Duty Determinations: Certain Steel Products From Belgium* (58 FR 37273, 37285, July 9, 1993). In that case the Department found at verification that the EIB provides loans to numerous sectors in all parts of the various EU countries. However, petitioners have not addressed this finding. Petitioners have neither alleged that the circumstances have changed nor that pasta producers may have received a disproportionate share of the benefits provided by this program. For these reasons, we are not including EIB loans in our investigation.

7. European Agriculture Fund (''EAGGF'') Aid

The EAGGF is a Structural Fund initiative similar to the ERDF and the ESF. However, while the ERDF and ESF have been investigated previously, the EAGGF has not. Petitioners allege that because these funds are allocated specifically to agriculture, pasta producers may have received benefits.

However, petitioners have provided no information regarding the types of benefits available under this program. In addition, section 355.43(b)(8) of our Proposed Regulations, which reflects our past practice, states that a program cannot be found specific solely on the basis of being limited to agriculture. For these reasons, we are not including EAGGF aid in our investigation.

B. Turkey

We are including in our investigation the following programs alleged in the petition to have provided subsidies to producers of the subject merchandise in Turkey:

1. *The Support and Price Stabilization Fund*
2. *Payments for Exports Shipped on Turkish Ships*
3. *Export Promotion Program*
4. *Pre-Shipment Export Loans*
5. *Export Credit Program*
6. *Tax Exemption for Export Earnings/ Advance Refunds of Tax Savings*
7. *Export Credit Through Foreign Trade Corporate Companies Rediscount Credit Facility*
8. *Normal Foreign Currency Export Loans*
9. *Performance Foreign Currency Export Loans*
10. *Export Credit Insurance*
11. *Regional Subsidy Programs*
    a. *Investment Allowances*
    b. *Mass Housing Fund Levy Exemptions*
    c. *Customs Duty Exemption*
    d. *Rebate of VAT on Domestic Goods*
    e. *Postponement of VAT on Imported Goods*
    f. *Additional Refunds of VAT*
    g. *Other Tax Exemptions*
    h. *Payment of Certain Obligations of Firms Undertaking Large Investments*
    i. *Corporate Tax Deferral*
    j. *Subsidized Turkish Lira Credit Facilities*
    k. *Subsidized Credit for Proportion of Fixed Expenditures*
    l. *Subsidized Credit in Foreign Currency*
    m. *Land Allocation*
12. *General Incentives Program*
    a. *Exemptions from Customs Duties*
    b. *Investment Allowances*
    c. *Employee Tax Exemptions*
    d. *Investment Financing Fund*
    e. *Building Construction Licensing Charge Immunity*
    f. *Tax, Duty and Charge Exemptions*
    g. *Foreign-Exchange Allocation*
    h. *Other Tax, Duty and Charge Exemptions*
    i. *Interest Spread Return*
    j. *Deferment of VAT on Machinery and Equipment*
    k. *Incentive Premium on Domestically Obtained Goods*
    l. *Incentive Credit for Investment Goods Manufacturers*
    m. *Wharfage Exemption*
    n. *Authorization to Seek Foreign Financing*
    o. *Interest Rebates on Export Financing*
13. *Exemption from Mass Housing Fund Levy (Duty Exemptions)*

We are not including in our investigation the following programs alleged to be benefitting producers of the subject merchandise in Turkey:

1. Direct Payments to Exporters of Wheat Products to Compensate for High Domestic Input Prices; Resource Utilization Support Fund; Preferential Export Financing

Petitioners have asked the Department to investigate three programs which, based on all evidence, were terminated prior to 1994. Petitioners argue that the Government of Turkey (''GOT'') has a practice of revoking and reinstituting programs, and as such, the Department should investigate whether these programs were available in 1994.

Petitioners' assertion that the GOT revokes and reinstitutes programs is based solely on the revision of the Export Tax Rebate and Supplemental Tax Rebate Programs described in *Final Affirmative Countervailing Duty Determination: Acetylsalicylic Acid (Aspirin) from Turkey* (52 FR 24404, July 1, 1987) (''*Aspirin*''). We do not believe this action provides a sufficient basis for us to conclude that the Turkish government has reinstated the programs at issue here. Therefore, we are not including these three programs in our investigation.

2. Direct Payments to Exporters of Wheat Products Based on Tonnage Exported

Petitioners allege that in December 1994, the GOT introduced a program to

encourage exports of wheat flour. This program provides exporters of wheat flour $35 per ton, for up to 20 percent of the total value of the exports. Petitioners assert that because the program is available for one wheat product, wheat flour, it is likely to be provided also for other wheat-based products.

Petitioners based their allegation on information contained in the *1995 Annual Report of Grain and Feed*, prepared by the American Embassy in Ankara. This publication provides no evidence that pasta producers are eligible for benefits under this program. Therefore, we are not including this program in our investigation.

3. Rebates of Various Taxes Upon Exportation

Petitioners allege that the GOT imposes a three percent customs duty on imported durum wheat, a raw material used in the production of pasta. Manufacturers are allowed to claim duty drawback from the Customs and Excise Authority for customs duties levied on raw materials which are used in the manufacture of exported goods and packaging materials. Petitioners allege that this drawback may be the same program that was found countervailable in both *Aspirin* and *Pipe and Tube*. Petitioners acknowledge that during the 1980's the GOT reduced the rebate rates in line with current economic policies. However, petitioners assert that there is a lack of correlation between the taxes actually paid and amounts rebated, and therefore, the Department should investigate this program.

Although petitioners' public summary of its market research describes this program as a duty drawback program, petitioners' other sources refer to an export tax rebate program. To the extent that this is an export tax rebate, we note that one of the publications petitioners used to support their allegation indicates that tax rebate rates for exports were reduced during the 1980's, and in 1989 the rates were reduced to zero. In fact, we determined the export tax rebate program to be terminated for exports of aspirin to the United States in *Aspirin*. Moreover, because the *Pipe and Tube* and *Aspirin* investigations involved tax rebates, not duty drawback, we have no reason to believe or suspect that these programs are related.

Finally, to the extent that this is a duty drawback program, we do not consider duty drawback on inputs consumed in production of the exported product to be countervailable subsidies unless excessive. We have no basis to believe or suspect that the duty drawback is excessive. For the foregoing reasons, we are not including this program in our investigation.

4. Supplemental Tax Rebates

Petitioners allege that the GOT provides supplemental tax rebates to exporters that have annual exports of more than $2 million, with the rate of rebate increasing as the value of a company's annual exports increases. These supplemental tax rebates are provided in addition to the export tax rebates described in 3. above.

This program was found countervailable in *Aspirin*. However, we also determined in *Aspirin* that the program had been terminated for exports of aspirin to the United States. Further, as indicated above, one of petitioners' sources indicates that tax rebate rates for exports were reduced to zero in 1989. Given these circumstances, and given that we treated the Supplemental Tax Rebate program as related to the Export Tax Rebate program (discussed immediately above), petitioners have not provided a sufficient basis to believe that the Supplemental Tax Rebate program remains in existence. On this basis, we are not including this program in our investigation.

5. Foreign Exchange Risk Insurance Scheme

Petitioners allege that in 1984 the GOT established the Foreign Exchange Risk Insurance Scheme to encourage domestic producers to obtain financing for the importation of capital goods. This scheme allegedly provided insurance against foreign exchange losses which was not otherwise available in the market.

Because the program is aimed at importation of capital equipment, it does not appear to be limited to exporters or any industry or group of industries in particular. Since petitioners have provided no information which indicates that this program provides benefits to a specific enterprise or industry or group of enterprises or industries, we are not including this program in our investigation.

6. Provision of Wheat to Beslen

Petitioners assert that the GOT, through the Soil Crops Corporation (''TMO''), became a joint venture partner in pasta producer Beslen Makarna Gida Sanayi ve Ticaret (''Beslen''). In return for providing the company with a quantity of its durum wheat, TMO was given a 45 percent equity stake in the company. Petitioners request that the Department investigate this arrangement to determine whether the provision of durum wheat by TMO constitutes an equity infusion into an unequityworthy company. If the Department treats Beslen as equityworthy, petitioners request that the Department investigate whether the equity stake obtained by TMO was adequate remuneration for the quantity of wheat provided under the arrangement.

Petitioners have provided no basis for considering this transaction to involve a subsidy. Petitioners have simply asked the Department to investigate whether TMO made an equity infusion into an unequityworthy company, without providing any evidence that the government's investment was inconsistent with the usual investment practices of private investors, including the practice regarding the provision of risk capital in Turkey. Similarly, petitioners have asked the Department to investigate whether TMO paid adequate remuneration, without providing any evidence regarding this matter. Because petitioners have not provided sufficient evidence to support their allegations, we are not including the provision of wheat to Beslen in our investigation.

7. Aid From the European Union

Petitioners assert that Turkey is an associate member of the EU, and as such, is eligible for aid from the EU. Petitioners have provided the 1993 European Investment Bank Annual Report which lists amounts for loans and grant aid going to Turkey (as well as Syria, Egypt, Lebanon, and other Mediterranean countries).

We have established that Turkey is an associate member of the EU. However, associate members of the EU are not part of the customs union known as the EU. Benefits conferred upon Turkish products from entities outside Turkey do not constitute subsidies within the meaning of sections 701(a) and 771(3) of the Act (*see* also General Issues Appendix to *Final Affirmative Countervailing Duty Determination: Certain Steel Products from Austria* (58 FR 37217, 37233, July 9, 1993) (''*General Issues Appendix*'')). On this basis, we are not including EU aid in our investigation.

8. Exemption From Mass Housing Fund Levy (Duty Drawback)

The GOT imposes a Mass Housing Fund levy on the importation of certain raw materials and finished or semifinished goods. For wheat, this levy amounted to $100 per metric ton. Petitioners have analyzed this part of the program as a duty drawback scheme.

Duty drawback on inputs consumed in the production process of exported products is not a subsidy, unless excessive. (See Agreement on Subsidies and Countervailing Measures, Annex I, item i of the Illustrative List). Because petitioners have not alleged that the duty drawback is excessive, we are not including the Mass Housing Fund Duty Drawback in our investigation. As noted earlier, however, we are initiating an investigation of the Mass Housing Fund Levy program which provides duty exemptions for pasta producers when importing durum wheat, regardless of whether the pasta is sold domestically or exported.

9. Employee Wage and Salary Tax Exemption (GIP/Regional Subsidies Programs)

Employees working in facilities constructed in First or Second Priority areas or in priority industries are partially exempt from income tax on their wages and salaries.

Section 355.44(j) of our Proposed Regulations (*see* also *General Issues Appendix*) states that the provision by a government of financial assistance to workers confers a countervailable benefit to the extent that such assistance relieves a firm of an obligation which it would normally incur. Since there is no indication that this program provides benefits to the employer and not the employee, we are not including this program in our investigation.

Creditworthiness

Petitioners assert that the Department should investigate whether the pasta producers in Turkey are creditworthy. Petitioners claim there is a lack of financial information available about the producers but that their analysis shows that Turkish producers are selling below cost in their home market. The existence of dumping margins based on a comparison of U.S. prices with the producers' cost of production shows that they are also not covering their costs in their largest export market.

The Department does not consider the creditworthiness of a firm absent a specific allegation by the petitioner which is supported by information establishing a reasonable basis to believe or suspect that the firm is uncreditworthy. This information would normally cover three years prior to the year in which the company is alleged to be uncreditworthy. Because petitioners have not provided sufficient evidence of the Turkish pasta producers' uncreditworthiness, we are not including a creditworthiness analysis in our investigation at this time.

Distribution of Copies of the Petition

In accordance with section 702(b)(4)(A)(i) of the Act, copies of the public version of the petition have been provided to the representatives of Italy and Turkey. We will attempt to provide copies of the public version of the petition to all the exporters named in the petition.

ITC Notification

Pursuant to section 702(d) of the Act, we have notified the ITC of these initiations.

Preliminary Determination by the ITC

The ITC will determine by June 26, 1995, whether there is a reasonable indication that an industry in the United States is being materially injured, or is threatened with material injury, by reason of imports from Italy and Turkey of pasta. Any ITC determination which is negative will result in the investigations being terminated; otherwise, the investigations will proceed according to statutory and regulatory time limits.

This notice is published pursuant to 702(c)(2) of the Act.

Dated: June 1, 1995.

Susan G. Esserman,

Assistant Secretary for Import Administration.

[FR Doc. 95–13984 Filed 6–7–95; 8:45 am]

BILLING CODE 3510–DS–P

[C–549–501]

Certain Circular Welded Carbon Steel Pipes and Tubes From Thailand: Preliminary Results of Countervailing Duty Administrative Review

AGENCY: Import Administration, International Trade Administration, Department of Commerce.

ACTION: Notice of Preliminary Results of Countervailing Duty Administrative Review.

SUMMARY: The Department of Commerce (the Department) is conducting an administrative review of the countervailing duty order on certain circular welded carbon steel pipe and tubes from Thailand. We preliminarily determine the net subsidy to be 0.23 percent *ad valorem* for Saha Thai Pipe and Tube Company (Saha Thai) and all other companies for the period January 1, 1993, through December 31, 1993. Because the net subsidy is *de minimis*, if the final results are the same as these preliminary results of administrative review, we will instruct U.S. customs to liquidate entries without regard to countervailing duties. Interested parties are invited to comment on these preliminary results.

EFFECTIVE DATE: June 8, 1995.

FOR FURTHER INFORMATION CONTACT: Stephen Lebowitz and Kelly Parkhill, Office of Countervailing Compliance, Import Administration, International Trade Administration, U.S. Department of Commerce, Room B099, 14th Street and Constitution Avenue, N.W., Washington, DC 20230; telephone (202) 482–1503 or 482–4126, respectively.

SUPPLEMENTARY INFORMATION

Background

On August 14, 1985, the Department published in the **Federal Register** (50 FR 32751) the countervailing duty order on certain circular welded carbon steel pipes and tubes from Thailand. On August 3, 1994, the Department published a notice of ''Opportunity to Request an Administrative Review'' (59 FR 39543) of this countervailing duty order. We received a timely request from Saha Thai.

We initiated the review, covering the period January 1, 1993, through December 31, 1993, on September 16, 1994 (59 FR 47609). The review covers one manufacturer/exporter of the subject merchandise and nine programs. The final results of the last administrative review in this case were published October 9, 1991 (56 FR 50852).

Applicable Statute and Regulations

The Department is conducting this administrative review in accordance with section 751(a) of the Tariff Act of 1930, as amended (the Act). Unless otherwise indicated, all citations to the statute and to the Department's regulations are in reference to the provisions as they existed on December 31, 1994.

Scope of Review

On March 29, 1994, the Department clarified the Harmonized Tariff Schedule (HTS) numbers that were applicable to the subject merchandise (*see Memorandum to Susan Esserman from Susan Kuhbach*, available in the Central Records Unit, Room B099, Main Commerce Building). This clarification was necessary because of annual changes in the HTS. The scope now reads:

Imports covered in this review are shipments of circular welded carbon steel pipes and tubes (pipes and tubes) with an outside diameter of 0.375 inch or more but not over 16 inches, of any wall thickness. These products, commonly referred to in the industry as standard pipe or structural tubing, are

produced to various ASTM specifications, most notably A–120, A–53 and A–135. During the review period, this merchandise was classified under item numbers 7306.30.10 and 7306.30.50 of the HTS. The HTS numbers are provided for convenience and Customs purposes. The written description remains dispositive.

The review covers the period January 1, 1993, through December 31, 1993.

Calculation Methodology for Assessment and Cash Deposit Purposes

We calculated the net subsidy on a country-wide basis by first calculating the subsidy rate for Saha Thai. As this was the only exporter of the subject merchandise, we used Saha Thai's rate as the country-wide rate. Since the country-wide rate calculated using this methodology was *de minimis,* as defined by 19 CFR § 355.7(1994), no further calculations were necessary.

Analysis of programs

I. Program Conferring Subsidies

Export Packing Credits

Export packing credits (EPCs) are short-term loans used for pre-shipment export financing. The loans are issued by commercial banks in baht for up to 180 days. The commercial banks are required to charge no more than a maximum interest rate of 10 percent *per annum* on the loan. Interest is paid on the due date of the loan. To obtain these loans, exporters issue promissory notes to the lending bank. The notes must be supported by an irrevocable letter of credit, a sales agreement, a purchase order, warehouse receipt, or issuance export bill. Commercial banks can lend up to the amount of the shipment. The commercial banks may rediscount 50 percent of the loan with the Bank of Thailand (BOT). On the date the loan is due, the BOT debits the commercial bank's account for the principal and the interest due. The commercial bank, in turn, debits the exporter's account or extends further credit at negotiated, commercial rates to the exporter.

If the exporter fails to export the total value of the goods by the due date, the BOT automatically charges the commercial bank a penalty retroactive to the first day of the loan. In case of non-performance by the exporter on the due date of the loan, this penalty is passed on to the exporter. During the period of review (POR), the penalty interest rate was 6.5 percent *per annum* on the entire loan. This penalty is forgiven and the exporter receives the EPC preferential rate if it makes the export shipment or receives payment in foreign currency for the product within 60 days after the due date of the promissory note. Because EPCs are available only to exporters, they are countervailable to the extent that the loans are provided at preferential rates.

To determine whether the loans are preferential, we ordinarily use as the benchmark the interest rate for the predominant source of short-term financing in the country in question. Where there is no single, predominant source of short-term financing, we may use a benchmark composed of the interest rates for two or more sources of short-term financing in the country in question, weighted, whenever possible, according to the value of the financing granted by each source. In *Final Countervailing Duty Determination and Countervailing Duty Order: Steel Wire Rope from Thailand* (56 FR 46299; Sept. 11, 1991) (*Steel Wire Rope*), the Department concluded that the minimum loan rate (MLR) and the minimum overdraft rate (MOR) as reported in the BOT Quarterly Bulletin are more representative of the prevailing short-term interest rates in Thailand than the rates used in previous cases. Based on that determination and on the recent United States Court of International Trade (CIT) decision in *Royal Thai Government and TTU Industrial Corp.* v *United States,* 850 F. Supp. 44 (CIT 1994), which said that the average rate of the MLR and MOR rates was the appropriate benchmark for short term loans, we are using the average of the 1993 MLR and MOR rates as reported in the BOT Quarterly Bulletin for 1993. That rate was 11.18 percent, which exceeded the maximum interest rate on EPCs of 10 percent. Therefore, we preliminarily determine that EPC loans are preferential.

To calculate the benefit provided to Saha Thai, currently the only known producer/exporter of the subject merchandise,[1] by the EPC loans during the POR, we compared the amount of interest actually paid to the amount that would have been paid at the benchmark rate. During the verification of the 1992 administrative review, we noted that the company had to specify the destination of the merchandise in order to receive the EPC loans. (*See, Certain Circular Welded Carbon Steel Pipes and Tubes From Thailand: Preliminary Results of Countervailing Duty Administrative Review* (60 FR 15901; March 28, 1995).) Because Saha Thai had to specify the destination of the subject merchandise for approval and because they exported only the subject merchandise to the United States, we divided the benefit by its total exports of the subject merchandise to the United States to arrive at a net bounty or grant of 0.23 percent *ad valorem*.

II. Programs Preliminary Found Not To Be Used

We also examined the following programs and preliminarily determine that Saha Thai did not apply for or receive benefits under these programs for the review period.

1. Tax Certificates for Exporters
2. Electricity Discounts for Exporters
3. Tax and Duty Exemptions Under Section 28 of the Investment Promotion Act
4. Repurchase of Industrial Bills
5. Export Processing Zones
6. International Trade Promotion Fund/ Export Promotion Fund
7. Reduced Business Taxes for Producers of Intermediate Goods for Export Industries
8. Additional Incentives under the IPA.

Preliminary Results of Review

For the period of January 1, 1993, through December 31, 1993, we preliminarily determine the net subsidy to be 0.23 percent *ad valorem* for all exporters and producers of pipe and tube from Thailand. In accordance with 19 CFR § 355.7, any rate less than 0.5% *ad valorem* is *de minimis.*

If the final results of this review remain the same as these preliminary results, the Department intends to instruct the U.S. Customs Service to liquidate, without regard to countervailing duties, all shipments of the subject merchandise from Thailand exported on or after January 1, 1993, and on or before December 31, 1993.

The Department intends to instruct the Customs Service to collect cash deposits of zero percent *ad valorem* of the f.o.b. invoice price on all shipments of this merchandise entered, or withdrawn from the warehouse, for consumption on or after the date of publication of the final results of this administrative review.

Parties to the proceeding may request disclosure of the calculation methodology and interested parties may request a hearing not later than 10 days after the date of publication of this written notice. Interested parties may submit written arguments in case briefs on these preliminary results within 30 days of the date of publication. Rebuttal briefs, limited to arguments raised in case briefs, may be submitted seven days after the time limit for filing the case brief. Any hearing, if requested, will be held seven days after the

[1] S.A.F. is an export trading company that is related to Saha Thai that began operations in 1993. All pipe exported by S.A.F. is produced by Saha Thai. We are treating the two companies as one corporate entity for purposes of our calculations.

scheduled date for submission of rebuttal briefs. Copies of case briefs and rebuttal briefs must be served on interested parties in accordance with 19 CFR 355.38(e).

Representatives of parties to the proceeding may request disclosure of proprietary information under administrative protective order no later than 10 days after the representative's client or employer becomes a party to the proceeding, but in no event later than the date the case briefs, under 19 CFR 355.38(c), are due. The Department will publish the final results of this administrative review including the results of its analysis of issues raised in any case or rebuttal brief or at a hearing.

The administrative review and notice are in accordance with section 751(a)(1) of the Act (19 U.S.C. 1675(a)(1)) and 19 CFR 355.22.

Dated: May 26, 1995.

Susan G. Esserman,

Assistant Secretary for Import Administration.

[FR Doc. 95–13983 Filed 6–7–95; 8:45 am]

BILLING CODE 3510–DS–P

[Docket Number 950531143–5143–01]

International Buyer Program (Formerly Known as the Foreign Buyer Program); Support for Domestic Trade Shows

AGENCY: International Trade Administration, Commerce.

ACTION: Notice and Call for Applications for the FY'97 International Buyer Program (October 1, 1996, through September 30, 1997).

SUMMARY: This notice sets forth objectives, procedures and application review criteria associated with the U.S. Department of Commerce's International Buyer Program (IBP), formerly known as the Foreign Buyer Program, to support domestic trade shows: Selection in the International Buyer Program for Fiscal Year 1997.

The International Buyer Program was established to bring international buyers together with U.S. firms by promoting leading U.S. trade shows in industries with high export potential. The International Buyer Program emphasizes cooperation between the U.S. Department of Commerce (DOC) and trade show organizers to benefit U.S. firms exhibiting at selected events and provides practical, hands-on assistance to U.S. companies interested in exporting such as export counseling and market analysis. The assistance provided to show organizers includes worldwide overseas promotion of selected shows to potential international buyers, end-users, representatives and distributors. The worldwide promotion is executed through the offices of the Commerce Department's Commercial Service of the United States of America (Commercial Service), formerly referred to as United States and Foreign Commercial Service, in 69 countries representing America's major trading partners, and also through U.S. Embassies in countries where the Commercial Service does not maintain offices. The Department expects to select approximately 22 shows for FY97 from among applicants to the program. Shows selected for the International Buyer Program will provide a venue for U.S. companies interested in expanding their sales into international markets. Successful applicants will be required to enter into a Memorandum of Understanding (MOU) that sets forth the specific actions to be performed by the show organizer and the DOC. The MOU constitutes a participation agreement between the DOC and the show organizer specifying which services are to be rendered by DOC as part of the IBP and, in turn, what responsibilities must be assumed by the show organizer. Anyone wishing to apply will be sent a copy of the MOU along with the application package. The services to be rendered by DOC will be carried out by the Commercial Service of the United States of America unless otherwise indicated.

DATES: Applications must be received within July 24, 1995. A contribution of $5,000 is required for each show selected by the IBP for inclusion in the FY97 program.

ADDRESSES: Export Promotion Services/International Buyer Program, Commercial Service of the United States of America, International Trade Administration, U.S. Department of Commerce, Room 2116, 14th and Constitution Avenue, N.W., Washington, D.C. 20230. Telephone: (202) 482–0481 (Facsimile applications will not be accepted.)

FOR FURTHER INFORMATION CONTACT: Contact Jim Boney, Product Manager, International Buyer Program, Room 2116, Export Promotion Services, U.S. and Foreign Commercial Service, International Trade Administration, U.S. Department of Commerce, 14th and Constitution Avenue, N.W., Washington, D.C. 20230. Telephone: (202) 482–0481 or Fax: (202) 482–0115.

SUPPLEMENTARY INFORMATION: The International Trade Administration (ITA) of the U.S. Department of Commerce is accepting applications for the International Buyer Program (IBP) for events taking place between October 1, 1996, and September 30, 1997.

Under the IBP, the Department seeks to bring international buyers together with U.S. firms by selecting and promoting in international markets domestic trade shows in industries with high export potential. Selection of a trade show is one-time, i.e., a trade show organizer seeking selection for a recurring event must submit a new application for selection for each occurrence of the event. If the event occurs more than once in the 12-month period covering this announcement, the trade show organizer must submit a separate application for each event.

The Department will select approximately 22 events to support during this 12-month period. The Department will select those events that, in its judgment, most clearly meet the Department's objectives and selection criteria mentioned below.

Selection indicates that the Department has found the event to be a leading international trade show appropriate for participation by U.S. exporting firms and promotion in overseas markets by U.S. Embassies and Consulates. Selection does not constitute a guarantee by the U.S. Government of the show's success. Selection is not an endorsement of the show organizer except as to its International Buyer Program activities. Non-Selection should not be viewed as a finding that the event will not be successful in the promotion of U.S. exports.

Exclusions

Trade shows that are either first-time or horizontal (non-industry specific) events will not be considered. Annual trade shows will not be selected for this program more than twice in any three-year period (e.g., shows selected for fiscal years 1995 and 1996 are not eligible for inclusion in this program in fiscal year 1997, but can be considered in subsequent years).

The Office of Management and Budget has approved the information collection requirements of the application to this program under the provisions of the Paperwork Reduction Act of 1980 (44 U.S.C. 3501 et. seq.) (OMB control no. 0625–0151 approved for use through 10/31/97).

General Selection Criteria

Subject to Departmental budget and resource constraints, those events will be selected that, in the judgment of the Department, most clearly meet the following criteria:

(a) Export Potential

The products and services to be promoted at the trade show are from U.S. industries that have high export potential, as determined by U.S. Department of Commerce sources, i.e., best prospects lists and U.S. export statistics. (Certain industries are rated as priorities by our domestic and international commercial officers in their Country Commercial Guides.)

(b) International Interest

The trade show meets the needs of a significant number of overseas markets covered by the Commercial Service and corresponds to marketing opportunities as identified by the posts in their Country Commercial Guides (e.g., best prospects lists). Previous international attendance at the show may be used as an indicator.

(c) Scope of the Show

The trade show offers a broad spectrum of U.S. made products and/or services for the subject industry. Trade shows with a majority of U.S. firms will be given preference.

(d) Stature of the Show

The trade show is clearly recognized by the industry it covers as a leading event for the promotion of that industry's products and services both domestically and internationally and as a showplace for the latest technology or services in that industry.

(e) Exhibitor Interest

There is demonstrated interest on the part of U.S. exhibitors in receiving international business visitors during the trade show. A significant number of these exhibitors should be new-to-export or seeking to expand sales into additional international markets.

(f) Overseas Marketing

There has been demonstrated effort made to market prior shows overseas. In addition, the applicant should describe in detail the international marketing program to be conducted for the event, explaining how efforts should increase individual and group international attendance.

(g) Logistics

The trade show site, facilities, transportation services and availability of accommodations are in the stature of an international-class trade show.

(h) Cooperation

The applicant demonstrates willingness to cooperate with the Commercial Service of the United States of America to fulfill the program's goals and to adhere to target dates set out in the Memorandum of Understanding and the event timetable, both of which are available from the program office.

Past experience in the IBP will be taken into account in evaluating current applications to the program.

Authority: The statutory authority authorizing the Department to provide the type of assistance contemplated under the International Buyer Program is 15 U.S.C. 4724.

John Klinglehut,

Acting Director, Office of Public/Private Initiatives, Commercial Service of the United States of America, International Trade Administration, U.S. Department of Commerce.

[FR Doc. 95–14033 Filed 6–7–95; 8:45 am]

BILLING CODE 3510–25–P

National Oceanic and Atmospheric Administration

Notice of Closure Areas To Conduct Restoration Activities in the Key Largo National Marine Sanctuary, Within the Florida Keys National Marine Sanctuary

AGENCY: Sanctuaries and Reserves Division (SRD), Office of Ocean and Coastal Resource Management (OCRM), National Ocean Service (NOS), National Oceanic and Atmospheric Administration (NOAA), Department of Commerce (DOC).

ACTION: Notice.

SUMMARY: The National Oceanic and Atmospheric Administration (NOAA) will temporarily close to public access two specified areas of the Key Largo National Marine Sanctuary (KLNMS), within the Florida Keys National Marine Sanctuary (FKNMS) between June 15 to September 15, 1995. The areas will be closed in order for NOAA, the U.S. Army Corps of Engineers (COE), and authorized contractors to conduct construction restoration activities to restore coral reefs and associated Sanctuary resources injured or destroyed as a result of the M/V *Elpis* and M/V *Alec Owen Maitland* grounding incidents, which occurred on October 25, and November 11, 1989, respectively. During the period for which the areas are closed, public access will be prohibited in order to efficiently allow and implement restoration and recovery activities, and to ensure protection of life and property during these complex construction activities.

FOR FURTHER INFORMATION CONTACT: Dr. Charles M. Wahle, Chief, Technical Projects Branch, Sanctuaries and Reserves Division, National Oceanic and Atmospheric Administration, 1305 East West Highway, SSMC4, 12th Floor, Silver Spring, Maryland 20910. 301–713–3141.

SUPPLEMENTARY INFORMATION: In accordance with the National Marine Sanctuaries Act (NMSA), Florida Keys National Marine Sanctuary and Protection Act (FKNMSPA), and particularly the KLNMS regulations at 15 CFR Part 929.7(b), NOAA will temporarily close to public access specified areas of the KLNMS, within the FKNMS.

Background

On October 25, and November 11, 1989, two large freighters grounded within the KLNMS, now part of the KFNMS. These groundings, as well as subsequent attempts by the operators to free the vessels from the reef, resulted in significant injuries to the reef substrate and resident marine organisms. Coral colonies, sponges and sea fans at the site were destroyed and attempts to free the vessels created holes in the reef's surface. In addition, the resulting debris continues to threaten living resources in the vicinity of the grounding site. Since the groundings, the excavations have expanded and will continue to do so in the absence of restoration efforts.

Section 312 of the NMSA authorizes NOAA to pursue civil actions to recover response costs and damages from parties who destroy, cause the loss of, or injury Sanctuary resources. Damage claims include, among other things, the cost of restore, replace, or acquire the equivalent of destroyed, lost or injured Sanctuary resources; the value of lost uses pending recovery of Sanctuary resources; the cost of conducting damage assessments; and the reasonable costs of monitoring. NOAA pursued natural resource damage actions under the NMSA to recover costs and damages from the responsible parties in order to restore the damaged reefs. The two grounding cases were settled in 1991 and the recovered monies are being used by NOAA to fund the coral reef restoration efforts.

NOAA, COE and authorized contractors will implement coral reef restoration work at the two grounding sites/Closure Areas in the KLNMS. The first phase of this project will be to stabilize the damaged reef habitat and re-create the overall physical structure of the coral reef surface, thereby enhancing rates of recovery of the coral communities that exited prior to the groundings.

At Closure Area 1, 40 large, pre-cast concrete structures will be placed over

the unstable excavations in the reef's surface which were caused by these groundings, and then cemented together. At Closure Area 2, quarried limestone boulders will be placed in large blow holes and sand poured around the boulders to form a continuous natural surface. These structures will recreate typical three-dimensional habitat relief and act as a stable, natural framework on which coral may be transplanted and coral larvae can colonize, thereby increasing the habitat value of the area.

Section 929.7(b) of the KLNMS regulations provide for closing to public use the KLNMS, or certain areas therein, in the event of emergency conditions endangering life or property, and/or to permit recovery of the living resources from overuse, or provide scientific research relating to protection and management. NOAA has deemed it necessary to close these two areas to public use to efficiently implement coral reef restoration and recovery activities and to ensure the protection of life and property during the conduct of such activities. Heavy construction materials and equipment (e.g., barges and cranes, concrete structures, and boulders) will be used at both sites to conduct the coral reef restoration activities. Consequently, it is necessary to secure a work area that adequately protects persons working on the site and the general public, as well as the equipment used to conduct the coral reef restoration activities. However, to minimize disruption of public access to the area, NOAA will close only the amount of area necessary to complete these coral reef restoration activities, including buffer zones to moor support vessels and provide an extra margin of public safety. Furthermore, these areas will be closed no longer than necessary to complete the coral restoration activities.

Locations and Boundaries of Closure Areas

The two Closure Areas are located approximately 5.6 nautical miles offshore northern Key Largo, or 40 nautical miles south-southwest of Government Cut at Miami Beach. The total area of the two Closure Areas consists of approximately one-half of a square nautical mile (snm), or one-quarter snm per site. The total area closed includes less than one percent of the total area of the KLNMS. The boundary of these exclusion areas will be marked by visible buoys.

Closure Area 1 (*Maitland* site) is approximately 1.5 nautical miles south-southwest of the Carysfort Light. Closure Area 1 is bounded by the following coordinates:

	State Plane Coordinates		Latitude	Longitude
	Northing	Easting		
A	316,430 N	755,480 E	25° 12′ 9.0″ N	80° 13′ 37.6″ W
B	315,705 N	756,810 E	25° 12′ 1.8″ N	80° 13′ 23.2″ W
C	314,380 N	756,085 E	25° 11′ 48.7″ N	80° 13′ 31.1″ W
D	315,105 N	754,770 E	25° 11′ 56.0″ N	80° 13′ 45.4″ W

Closure Area 2 (*Elpis* site) is approximately 0.25 nautical miles east-northeast of the Elbow Reef Light. Closure Area 2 is bounded by the following coordinates:

	State Plane Coordinates		Latitude	Longitude
	Northing	Easting		
E	296,955 N	746,345 E	25° 8′ 56.7″ N	80° 15′ 18.3″ W
F	297,860 N	747,410 E	25° 9′ 5.6″ N	80° 15′ 6.6″ W
G	296,840 N	748,265 E	25° 8′ 55.4″ N	80° 14′ 57.3″ W
H	295,675 N	746,880 E	25° 8′ 43.9″ N	80° 15′ 12.5″ W
I	296,310 N	746,340 E	25° 8′ 50.3″ N	80° 15′ 18.3″ W

Time frame

Closure Areas 1 and 2 will be closed to public access from June 15 to September 15, 1995. Notice of the removal of the Closure Areas restriction will be issued by NOAA once coral reef restoration activities are completed.

Penalties

Pursuant to the NMSA, regulations at 15 CFR Part 922, and KLNMS regulations at 15 CFR § 929.9, any violation of the NMSA or regulations, including unauthorized entry into the Closure Areas, is subject to a Maximum civil penalty of $100,000 per violation per day. Furthermore, the NMSA and regulations authorize a proceeding *in rem* against any vessel used in violation of any such regulation.

Section 929.7(b) of the LKNMS regulations provides that public notice of closures will be provided through local news media and posting of placards at the John Pennekamp Coral Reef State Park, if deemed necessary. In addition to providing notice in the **Federal Register**, NOAA will provide public notice of the closures in a notice to mariners, local newspaper notices, bulletin boards, and brochures.

Dated: June 2, 1995.

W. Stanley Wilson,

Assistant Administrator for Ocean Services and Coastal Zone Management.

[FR Doc. 95–14070 Filed 6–7–95; 8:45 am]

BILLING CODE 3510–08–M

DEPARTMENT OF EDUCATION

[CFDA No.: 84.083]

Women's Educational Equity Act Program; Notice Inviting Applications for New Awards for Fiscal Year (FY) 1995

Purpose of Program: To promote gender equity in education; to promote equity in education for women and girls who suffer from multiple forms of discrimination based on sex and race, ethnic origin, limited English proficiency, disability or age; and to provide financial assistance to enable educational agencies to meet the requirements of title IX of the Education Amendments of 1972.

Eligible Applicants: Public agencies, private nonprofit agencies, organizations, institutions, student

groups, community groups, and individuals.

Deadline for Transmittal of Applications: July 24, 1995.

Deadline for Intergovernmental Review: September 22, 1995.

Applications Available: June 19, 1995.

Available Funds: $3.2 million.

Estimated Range of Awards: Implementation Grants: $210,000–$310,000; Research and Development Grants: $80,000–$200,000.

Estimated Average Size of Awards: Implementation Grants: $260,000; Research and Development Grants: $140,000.

Estimated Number of Awards: Implementation Grants: 10; Research and Development Grants: 4.

Note: The Department is not bound by any estimates in the notice.

Project Period: Up to 48 months.

Applicable Regulations: The Education Department General Administrative Regulations (EDGAR) in 34 CFR parts 74, 75, 77, 79, 80, 81, 82, 85, and 86.

SUPPLEMENTARY INFORMATION: The Department will award two types of grants: (1) grants for the *implementation* of gender equity programs in schools; and (2) *research and development* grants to develop model equity programs. Examples of authorized activities under the program include—

Implementation Grants

(a) Assisting educational agencies and institutions to implement policies and practices to comply with title IX of the Education Amendments of 1972;

(b) Training for teachers, counselors, administrators, and other school personnel, especially preschool and elementary school personnel, in gender-equitable teaching and learning practices;

(c) Leadership training for women and girls to develop professional and marketable skills to compete in the global marketplace, improve self-esteem, and benefit from exposure to positive role models;

(d) School-to-work transition programs, guidance and counseling activities, and other programs to increase opportunities for women and girls to enter a technologically demanding workplace and, in particular, to enter highly skilled, high-paying careers in which women and girls have been underrepresented;

(e) Enhancing educational and career opportunities for those women and girls who suffer multiple forms of discrimination, based on sex and on race, ethnic origin, limited-English proficiency, disability, socioeconomic status, or age;

(f) Assisting pregnant students and students rearing children to remain in or to return to secondary school, graduate, and prepare their preschool children to start school;

(g) Evaluating exemplary model programs to assess the ability of such programs to advance educational equity for women and girls;

(h) Introduction into the classroom of textbooks, curricula, and other materials designed to achieve equity for women and girls;

(i) Programs and policies to address sexual harassment and violence against women and girls and to ensure that educational institutions are free from threats to the safety of students and personnel;

(j) Nondiscriminatory tests of aptitude and achievement and of alternative assessments that eliminate biased assessment instruments from use;

(k) Programs to increase educational opportunities, including higher education, vocational training, and other educational programs for low-income women, including underemployed and unemployed women, and women receiving Aid to Families with Dependent Children benefits;

(l) Programs to improve representation of women in educational administration at all levels; and

(m) Planning, development, and initial implementation of—

(i) Comprehensive institution or districtwide evaluation to assess the presence or absence of gender equity in educational settings;

(ii) Comprehensive plans for implementation of equity programs in State and local educational agencies and institutions of higher education, including community colleges; and

(iii) Innovative approaches to school-community partnerships for educational equity.

Research and Development Activities

(a) Research and development of innovative strategies and model training programs for teachers and other education personnel;

(b) The development of high-quality and challenging assessment instruments that are nondiscriminatory;

(c) The development and evaluation of model curricula, textbooks, software, and other educational materials to ensure the absence of gender stereotyping and bias;

(d) The development of instruments and procedures that employ new and innovative strategies to assess whether diverse educational settings are gender equitable;

(e) The development of instruments and strategies for evaluation, dissemination, and replication of promising or exemplary programs designed to assist local educational agencies in integrating gender equity in their educational policies and practices;

(f) Updating high-quality educational materials previously developed through Women's Educational Equity Act grants;

(g) The development of policies and programs to address and prevent sexual harassment and violence to ensure that educational institutions are free from threats to safety of students and personnel;

(h) The development and improvement of programs and activities to increase opportunity for women, including continuing educational activities, vocational education, and programs for low-income women, including underemployed and unemployed women, and women receiving Aid to Families with Dependent Children; and

(i) The development of guidance and counseling activities, including career education programs, designed to ensure gender equity.

Selection Criteria

The selection criteria for implementation grants and research and development grants, respectively, are included, in full, in the WEEA application package. These selection criteria were established based on the Department's Notice of Optional Procedure for Conducting Fiscal Year 1995 Grant Competitions Under the Improving America's Schools Act of 1994, which was published in the **Federal Register** on March 7, 1995.

The respective criteria provide that the Secretary may award up to 100 points for the selection criteria for that competition. The selection criteria for each competition include all the EDGAR selection criteria in 34 CFR 75.210. The Secretary has also established the following additional selection criteria for the respective competitions by assigning the number of points indicated to particular WEEA statutory provisions identified below. The Secretary awards points under these criteria according to how well the applicant addresses the statutory provision:

Additional Implementation Grant Criteria

(a) *Project as a component of a comprehensive plan*—20 U.S.C. 7235(a)(2)(C)—(5 points).

(b) *Implementing an institutional change strategy*—20 U.S.C. 7235(a)(2)(D)—(5 points).

(c) *Meeting local needs*—20 U.S.C. 7235(a)(2)(B)—(5 points).

Additional Research and Development Grant Criteria

(a) *Addressing multiple discrimination*—20 U.S.C. 7235(a)(2)(A)—(5 points).

(b) *Addressing issues of national significance*—20 U.S.C. 7235(b)(3)(D)—(5 points).

Priorities

Under 34 CFR 75.105(c)(1) and 20 U.S.C. 7235, the Secretary invites and encourages applications that meet the following invitational priorities for implementation grant and research and development grant competitions, respectively. The Secretary is particularly interested in applications that meet these priorities. However, an application that meets the respective invitational priority does not receive competitive or absolute preference over other applications.

Implementation Grants

Projects that address the educational needs of women and girls who suffer multiple or compound discrimination based on sex and on race, ethnic origin, disability, or age.

Research and Development Grants

Projects to update high-quality educational materials developed through previous WEEA grants. These products are identified and described in the WEEA application package.

Note: In funding projects to update previously developed materials, the Department will utilize its license under 34 CFR 74.145 and 80.34 to use, and authorize others to use, copyrighted material for Federal Government purposes. These purposes include implementing WEEA's statutory authorization to develop, maintain, and disseminate materials and resources relating to education equity for women and girls and to update education materials previously developed through WEEA grants. In addition, the Department expects to fund only one project to update any individual WEEA product.

FOR APPLICATIONS OR INFORMATION CONTACT: Carrolyn N. Andrews, U.S. Department of Education, 600 Independence Avenue, SW., Portals Room 4500, Washington, DC 20202–6140. Telephone (202) 260–2670. Individuals who use a telecommunications device for the deaf (TDD) may call the Federal Information Relay Service (FIRS) at 1–800–877–8339 between 8 a.m. and 8 p.m., Eastern time, Monday through Friday.

Information about the Department's funding opportunities, including copies of application notices for discretionary grant competitions, can be viewed on the Department's electronic bulletin board (ED Board), telephone (202) 260–9950; or on the Internet Gopher Server at GOPHER.ED.GOV (under Announcements, Bulletins, and Press Releases). However, the official application notice for a discretionary grant competition is the notice published in the **Federal Register**.

Program Authority: 20 U.S.C. 7231–7238.

Dated: June 1, 1995.

Thomas W. Payzant,

Assistant Secretary for Elementary and Secondary Education.

[FR Doc. 95–14009 Filed 6–7–95; 8:45 am]

BILLING CODE 4000–01–P

DEPARTMENT OF ENERGY

Federal Energy Regulatory Commission

[Docket No. TM95–3–49–000]

Williston Basin Interstate Pipeline Co.; Notice of Annual Take-or-Pay Reconciliation Filing

June 2, 1995.

Take notice that on May 31, 1995, Williston Basin Interstate Pipeline Company (Williston Basin), tendered for filing its Annual Take-or-Pay Reconciliation Filing pursuant to Sections 36 and 37 of the General Terms and Conditions of its FERC Gas Tariff, Second Revised Volume No. 1, more specifically, Williston Basin filed the following tariff sheets:

Primary: Second Revised Volume No. 1

Eleventh Revised Sheet No. 15
Fourteenth Revised Sheet No. 16
Eleventh Revised Sheet No. 18
Tenth Revised Sheet No. 21
Second Revised Sheet No. 308
Second Revised Sheet No. 320
Second Revised Sheet No. 321

Original Volume No. 2

Fifty-seventh Revised Sheet No. 11B

Williston Basin has requested that the Commission accept this filing to become effective July 1, 1995.

Williston Basin states that the revised tariff sheets are being filed to reflect recalculated fixed monthly surcharges and revised throughput surcharges to be effective during the period July 1, 1995 through June 30, 1996 pursuant to the procedures contained in Sections 36 and 37 of the General Terms and Conditions of Williston Basin's FERC Gas Tariff, Second Revised Volume No. 1.

Any person desiring to be heard or to protest said filing should file a motion to intervene or protest with the Federal Energy Regulatory Commission, 825 North Capitol Street NE., Washington, DC 20426, in accordance with Rules 211 and 214 of the Commission's Rules of Practice and Procedure (18 CFR 385.211 and 385.214). All such motions or protests should be filed on or before June 9, 1995. Protests will be considered by the Commission in determining the appropriate action to be taken, but will not serve to make protestants parties to the proceeding. Any person wishing to become a party to the proceeding must file a motion to intervene. Copies of the filing are on file with the Commission and are available for public inspection.

Linwood A. Watson, Jr.,

Acting Secretary.

[FR Doc. 95–14031 Filed 6–7–95; 8:45 am]

BILLING CODE 6717–01–M

[Docket No. TM95–3–86–000]

Pacific Gas Transmission Co.; Notice of Change in Rates

June 2, 1995.

Take notice that on May 31, 1995, Pacific Gas Transmission Company (PGT) tendered for filing and acceptance proposed tariff sheets to be a part of its FERC Gas Tariff, First Revised Volume No. 1–A and Second Revised Volume No. 1.

PGT requests these tariff sheets become effective on July 1, 1995.

PGT further states that it is submitting these tariff sheets to comply with Paragraphs 37 and 23 of the terms and conditions of First Revised Volume No. 1–A and Second Revised Volume No. 1, respectively of its FERC Gas Tariff, ''Adjustment for Fuel, Line Loss and Other Unaccounted For Gas Percentages.'' These tariff changes reflect the new fuel and line loss surcharge percentage to become effective July 1, 1995. Also included, as required by Paragraphs 37 and 23, are workpapers showing the derivation of the current fuel and line loss percentage in effect for each month the fuel tracking mechanism has been in effect.

PGT further states that a copy of this filing has been served on PGT's jurisdictional customers and interested state regulatory agencies.

Any person desiring to be heard or protest said filing should file a motion to intervene or protest with the Federal Energy Regulatory Commission, 825 North Capitol Street NE., Washington, DC 20426, in accordance with Sections 385.214 and 385.211 of the Commission's Rules of Practice and Procedure. All such motions or protests should be filed on or before June 9, 1995. Protests will be considered by the Commission in determining the appropriate action to be taken, but will

not serve to make protestants parties to the proceeding. Any person wishing to become a party must file a motion to intervene. Copies of this filing are on file with the Commission and are available for public inspection in the Public Reference Room.

Linwood A. Watson, Jr.,

Acting Secretary.

[FR Doc. 95–14030 Filed 6–7–95; 8:45 am]

BILLING CODE 6717–01–M

[Docket No. CP95–528–000]

ANR Storage Co., Notice of Request Under Blanket Authorization

June 2, 1995.

Take notice that on May 26, 1995, ANR Storage Company (ANR) 500 Renaissance Center, Detroit, Michigan 48243, filed in Docket No. CP95–528–000, a request pursuant to Sections 157.205 and 157.212 of the Commission's Regulations under the Natural Gas Act (18 CFR 157.205 and 157.212) for authorization to add and operate a delivery point (the Rapid River Delivery Point) in Rapid River Township, Kalkaska County, Michigan under the blanket certificate issued in Docket No. CP82–523–000, pursuant to Section 7(c) of the Natural Gas Act, all as more fully set forth in the request which is on file with the Commission and open to public inspection.

ANR proposes to add the Rapid River Delivery Point where ANR is currently physically interconnected with ANR Pipeline Company in the Township of Rapid River. ANR relates that the interconnect was authorized by a May 1, 1992, Commission order in Docket No. CP91–2705–000. ANR states that it does not propose to increase its maximum authorized storage deliveries, abandon any service, nor construct any new facilities. ANR states that the gas delivered or redelivered at the proposed new delivery point will be measured by measuring equipment owned by ANR Pipeline Company. ANR asserts that the new delivery point will not impact the storage services ANR currently provides to its existing customers other than to offer ANR's current and future customers the additional flexibility of another delivery point to deliver gas for storage or withdraw gas from storage.

Any person or the Commission's staff may, within 45 days after issuance of the instant notice by the Commission, file pursuant to Rule 214 of the Commission's Procedural Rules (18 CFR 385.214) a motion to intervene or notice of intervention and pursuant to Section 157.205 of the Regulations under the Natural Gas Act (18 CFR 157.205) a protest to the request. If no protest is filed within the time allowed therefor, the proposed activity shall be deemed to be authorized effective the day after the time allowed for filing a protest. If a protest is filed and not withdrawn within 30 days after the time allowed for filing a protest, the instant request shall be treated as an application for authorization pursuant to Section 7 of the Natural Gas Act.

Linwood A. Watson, Jr.,

Acting Secretary.

[FR Doc. 95–14029 Filed 6–7–95; 8:45 am]

BILLING CODE 6717–01–M

[Docket No. CP95–529–000]

Northwest Pipeline Corp.; Notice of Request Under Blanket Authorization

June 2, 1995.

Take notice that on May 26, 1995, Northwest Pipeline Corporation (Northwest), 295 Chipeta Way, Salt Lake City, Utah 84158, filed in Docket No. CP95–529–000 a request pursuant to Sections 157.205 and 157.211 of the Commission's Regulations under the Natural Gas Act (18 CFR 157.205, 157.211) for authorization to construct and operate delivery point facilities in Franklin County, Washington, to accommodate deliveries of natural gas to Cascade Natural Gas Corporation (Cascade), under Northwest's blanket certificate issued in Docket No. CP82–433–000 pursuant to Section 7 of the Natural Gas Act, all as more fully set forth in the request that is on file with the Commission and open to public inspection.

Northwest proposes to construct and operate the North Pasco Meter Station to accommodate the delivery of approximately 263 dt equivalent of gas per day. It is stated that the design capacity of the meter station would permit Northwest to deliver up to 1,700 dt equivalent of gas per day to Cascade. It is further stated that Northwest is authorized to transport gas for Cascade under the terms of its Rate Schedule TF–1. The construction cost of the facilities is estimated at approximately $365,100. It is asserted that the new facilities are required to serve new residential and commercial customers in Franklin County. It is further asserted that no significant impact on Northwest's peak day deliveries will result from the proposed construction of the North Pasco Meter Station.

Any person or the Commission's staff may, within 45 days after issuance of the instant notice by the Commission, file pursuant to Rule 214 of the Commission's Procedural Rules (18 CFR 385.214) a motion to intervene or notice of intervention and pursuant to Section 157.205 of the Regulations under the Natural Gas Act (18 CFR 157.205) a protest to the request. If no protest is filed within the time allowed therefor, the proposed activity shall be deemed to be authorized effective the day after the time allowed for filing a protest. If a protest is filed and not withdrawn within 30 days after the time allowed for filing a protest, the instant request shall be treated as an application for authorization pursuant to Section 7 of the Natural Gas Act.

Linwood A. Watson, Jr.,

Acting Secretary.

[FR Doc. 95–14028 Filed 6–7–95; 8:45 am]

BILLING CODE 6717–01–M

[Docket No. RP95–312–000]

KN Interstate Gas Transmission Co., Notice of Proposed Changes in FERC Gas Tariff

June 2, 1995.

Take notice that on May 31, 1995, KN Interstate Gas Transmission Co. (KN Interstate) tendered for filing certain revised tariff sheets to its FERC Gas Tariff, Second Revised Volume No. 1–A. KN Interstate requests that the tendered sheets be accepted for filing and permitted to become effective on June 1, 1995.

KN Interstate states that the purpose of its filing is to comply with the Commission's Order Issued May 2, 1995 in Docket No. CP95–187–000 and with its commitment to its customers pursuant to its settlement in its most recent rate case in Docket No. RP94–93–000. In the instant filing, KN Interstate submits rate revisions which reduce its open access storage, SCS and no notice rates by removing from its rates the costs associated with the storage facilities which are being abandoned pursuant to authority granted in Docket No. CP95–187–000. In addition, KN Interstate submits revised tariff sheets removing references to the storage fields which are being abandoned.

KN Interstate states that a copy of its filing was served on all storage customers and on all interested parties.

Any person desiring to be heard or to protest said filing should file a motion to intervene or a protest with the Federal Energy Regulatory Commission; 825 North Capitol Street NE, Washington, DC 20426, in accordance with Sections 385.214 and 385.211 of the Commission's Rules and Regulations. All such motions or protests should be filed on or before June 9, 1995. Protests will be considered

by the Commission in determining the appropriate action to be taken, but will not serve to make protestants parties to the proceeding. Any person wishing to become a party must file a motion to intervene. Copies of this filing are on file with the Commission and are available for public inspection in the Public Reference Room.

Linwood A. Watson, Jr.,

Acting Secretary.

[FR Doc. 95–14026 Filed 6–7–95; 8:45 am]

BILLING CODE 6717–01–M

[Docket No. RP95–313–000]

Northern Natural Gas Co.; Notice of Proposed Changes in FERC Gas Tariff

June 2, 1995.

Take notice that on May 31, 1995, Northern Natural Gas Company (Northern), tendered for filing changes in its FERC Gas Tariff, Fifth Revised Volume No. 1.

Northern states that the filing revises the current Stranded Account No. 858 surcharge, which is designed to recover costs incurred by Northern related to its contracts with third-party pipelines. Therefore, Northern has filed 1 Rev Seventeenth Revised Sheet Nos. 50 and 51 to revise this surcharge effective July 1, 1995.

Northern states that copies of this filing were served upon the Company's customers and interested state commissions.

Any person desiring to be heard or to protest said filing should file a motion to intervene or protest with the Federal Energy Regulatory Commission, 825 North Capitol Street NE., Washington, DC 20426, in accordance with Sections 385.214 and 385.211 of the Commission's Rules and Regulations. All such motions or protests should be filed on or before June 9, 1995. All protests will be considered by the Commission in determining the appropriate action to be taken in this proceeding, but will not serve to make protestant a party to the proceedings. Any person wishing to become a party must file a motion to intervene. Copies of this filing are on file with the Commission and are available for inspection.

Linwood A. Watson, Jr.,

Acting Secretary.

[FR Doc. 95–14025 Filed 6–7–95; 8:45 am]

BILLING CODE 6717–01–M

[Docket No. RP95–315–000]

ANR Pipeline Co.; Notice of Proposed Changes in FERC Gas Tariff

June 2, 1995.

Take notice that on May 31, 1995, ANR Pipeline Company (ANR), tendered for filing as part of its FERC Gas Tariff, Second Revised Volume No. 1, the following tariff sheets, with a proposed effective date of June 1, 1995:

Eighth Revised Sheet No. 8
Tenth Revised Sheet No. 9
Tenth Revised Sheet No. 13
Tenth Revised Sheet No. 16
Eleventh Revised Sheet No. 18

ANR states that the above-referenced tariff sheets are being filed pursuant to the approved recovery mechanism of its Tariff to implement recovery of $9.2 million of costs that are associated with its obligations to Dakota Gasification Company (Dakota). ANR proposes a reservation surcharge applicable to its Part 284 firm transportation customers to collect ninety percent (90%) of the Dakota costs and an adjustment to the maximum base tariff rates of Rate Schedule ITS and overrun rates applicable to Rate Schedule FTS–2 so as to recover the remaining ten percent (10%).

ANR states that the filing also reflects an update to the Eligible MDQ used to calculate the reservation surcharge, as required by ANR's tariff.

ANR states that all of its Volume No. 1 customers and interested State Commissions have been mailed a copy of this filing.

Any person desiring to be heard or to protest said filing should file a motion to intervene or protest with the Federal Energy Regulatory Commission, 825 North Capitol Street, NE., Washington, DC 20426 in accordance with Rules 211 and 214 of the Commission's Rules of Practice and Procedure (18 CFR 385.211, 385.214). All such motions or protests must be filed on or before June 9, 1995. Protests will be considered by the Commission in determining the appropriate action to be taken, but will not serve to make protestants parties to the proceeding. Any person wishing to become a party must file a motion to intervene. Copies of this application are on file with the Commission and are available for public inspection.

Linwood A. Watson, Jr.,

Acting Secretary.

[FR Doc. 95–14024 Filed 6–7–95; 8:45 am]

BILLING CODE 6717–01–M

[Docket No. RP95–316–000]

ANR Pipeline Co.; Notice of Proposed Changes in FERC Gas Tariff

June 2, 1995.

Take notice that on May 31, 1995, ANR Pipeline Company (ANR), tendered for filing as part of its FERC Gas Tariff, Second Revised Volume No. 1, the following tariff sheets:

Twelfth Revised Sheet No. 18
Third Revised Sheet No. 177
Second Revised Sheet No. 180
Third Revised Sheet No. 181

ANR states that the above-referenced tariff sheets are being filed to restate its currently effective Gas Supply Realignment (GSR) and Pricing Differential (PD) Reservation Surcharges, to reflect the impact of the annual update of the Eligible MDQ that is used to calculate those Surcharges, and to make a change to its existing tariff mechanism to incorporate a permanent change to the timing of all such subsequent update filings. ANR has requested that the Commission accept the tendered sheets to become effective June 1, 1995.

ANR states that all of its Volume No. 1 FERC Gas Tariff customers and interested State Commissions have been mailed a copy of this filing.

Any person desiring to be heard or to protest said filing should file a motion to intervene or protest with the Federal Energy Regulatory Commission, 825 North Capitol Street, NE., Washington, DC 20426 in accordance with Rules 211 and 214 of the Commission's Rules of Practice and Procedure (18 CFR 385.211). All such motions or protests should be filed on or before June 9, 1995. Protests will be considered by the Commission in determining the appropriate action to be taken, but will not serve to make protestants parties to the proceeding. Any person wishing to become a party must file a motion to intervene. Copies of the application are on file with the Commission and are available for public inspection.

Linwood A. Watson, Jr.,

Acting Secretary.

[FR Doc. 94–14023 Filed 6–7–94; 8:45 am]

BILLING CODE 6717–01–M

[Docket No. RP95–317–000]

ANR Pipeline Co.; Notice of Proposed Changes in FERC Gas Tariff

June 2, 1995.

Take notice that on May 31, 1995, ANR Pipeline Company (ANR) tendered for filing as part of its FERC Gas Tariff, Second Revised Volume No. 1, the

following revised tariff sheet, proposed to be effective July 1, 1995:

Second Revised Sheet No. 179

ANR states that the above-referenced tariff sheet is being filed to extend by two years ANR's pricing differential mechanism.

ANR states that all of its Volume No. 1 customers and interested State Commissions have been mailed a copy of this filing.

Any person desiring to be heard or protest said filing should file a motion to intervene or protest with the Federal Energy Regulatory Commission, 825 North Capitol Street NE., Washington, DC 20426, in accordance with Rules 211 and 214 of the Commission's Rules of Practice and Procedure (18 CFR 385.211 and 385.214). All such motions or protests should be filed on or before June 9, 1995. Protests will be considered by the Commission in determining the appropriate action to be taken, but will not serve to make protestants parties to the proceeding. Anyone wishing to become a party to the proceeding must file a motion to intervene. Copies of this application are on file with the Commission and are available for public inspection.

Linwood A. Watson, Jr.,

Acting Secretary.

[FR Doc. 95–14022 Filed 6–7–95; 8:45 am]

BILLING CODE 6717–01–M

[Docket No. RP95–318–000]

Williston Basin Interstate Pipeline Co.; Notice of Proposed Changes in FERC Gas Tariff

June 2, 1995.

Take notice that on May 31, 1995, Williston Basin Interstate Pipeline Company (Williston Basin), tendered for filing a revised tariff sheet to Second Revised Volume No. 1 of its FERC Gas Tariff.

Williston Basin states that the revised tariff sheet is being submitted to effectuate the termination of small customer transportation service to Frannie–Deaver Utilities Company and to eliminate such reference from Rate Schedule ST–1.

Any person desiring to be heard or to protest said filing should file a motion to intervene or protest with the Federal Energy Regulatory Commission, 825 North Capitol Street NE., Washington DC 20426, in accordance with Rules 211 and 214 of the Commission's Rules of Practice and Procedure (18 CFR 385.211 and 385.214). All such motions or protests should be filed on or before June 9, 1995. Protests will be considered by the Commission in determining the appropriate action to be taken, but will not serve to make protestants parties to the proceeding. Any person wishing to become a party to the proceeding must file a motion to intervene. Copies of the filing are on file with the Commission and are available for public inspection.

Linwood A. Watson, Jr.,

Acting Secretary.

[FR Doc. 95–14021 Filed 6–7–95; 8:45 am]

BILLING CODE 6717–01–M

[Docket No. RP95–319–000]

Iroquois Gas Transmission System, L.P.; Notice of Proposed Changes in FERC Gas Tariff

June 2, 1995.

Take notice that on May 31, 1995, Iroquois Gas Transmission, System, L.P. (Iroquois) tendered for filing as part of its FERC Gas Tariff, First Revised Volume No. 1, the following revised tariff sheets, with a proposed effective date of June 1, 1995:

First Revised Tariff Sheet No. 93
First Revised Tariff Sheet No. 94

Iroquois states that the purpose of the proposed changes is to bring its tariff into conformity with recent regulatory changes promulgated by the Commission in Order No. 577, revising 18 CFR 284.243(h), which provides for limited exemptions to the advance posting and bidding requirements of the Commission's capacity release regulations. Specifically, these revised tariff sheets; (i) permit shippers to enter into pre-arranged releases of one calendar month or less without complying with the advance posting and bidding requirements; (ii) allow a releasing customer to make another exempt release to a replacement customer 28 days after the previous exempt release; and (iii) provide that Iroquois will post notice of an exempt transaction at the maximum rate as soon as possible, but not later than 48 hours after the release transaction commences.

Iroquois states that copies of this filing were served upon all jurisdictional customers and interested state regulatory agencies.

Any person desiring to be heard or to protest said filing should file a motion to intervene or protest with the Federal Energy Regulatory Commission, 825 North Capitol Street NE., Washington, DC 20426, in accordance with 18 CFR 385.214 and 385.211 of the Commission's Rules and Regulations. All such petitions or protests should be filed on or before June 9, 1995. Protests will be considered by the Commission in determining the appropriate action to be taken, but will not serve to make protestants parties to the proceeding. Any person wishing to become a party must file a motion to intervene. Copies of this filing are on file with the Commission and are available for public inspection in the public reference room.

Linwood A. Watson, Jr.,

Acting Secretary.

[FR Doc. 95–14020 Filed 6–7–95; 8:45am]

BILLING CODE 6717–01–M

[Docket No. RP95–320–000]

Northwest Pipeline Corp.; Notice of Account No. 191 Report

June 2, 1995.

Take notice that on May 31, 1995, Northwest Pipeline Corporation (Northwest) tendered for filing with the Federal Energy Regulatory Commission an Account No. 191 report pursuant to Section 28.7(c) of the General Terms and Conditions of Northwest's FERC Gas Tariff, Third Revised Volume No. 1. Northwest states that Section 28.7(c) requires Northwest to file a report with the Commission within 60 days of the amortization period pertaining to the Account No. 191 payments by Conversion Customers (as defined in Section 28.3 of Northwest's General Terms and Conditions) showing the total amounts billed to each customer and containing workpapers supporting the amounts billed and paid by each customer.

Northwest states that a copy of this filing has been served upon Northwest's Conversion Customers and interested state regulatory commissions.

Any person desiring to be heard or protest said filing should file a motion to intervene or protest with the Federal Energy Regulatory Commission, 825 North Capitol Street NE., Washington, DC 20426, in accordance with Sections 385.214 and 385.211 of the Commission's Rules of Practice and Procedure. All such motions or protests should be filed on or before June 9, 1995. Protests will be considered by the Commission in determining the appropriate action to be taken, but will not serve to make protestants parties to the proceeding. Any person wishing to become a party must file a motion to intervene. Copies of this filing are on file with the Commission and are available for public inspection in the Public Reference Room.

Linwood A. Watson, Jr.,

Acting Secretary.

[FR Doc. 95–14019 Filed 6–7–95; 8:45 am]

BILLING CODE 6717–01–M

[Docket No. RP95–322–000]

El Paso Natural Gas Co.; Notice of Tariff Filing

June 2, 1995.

Take notice that on May 31, 1995, El Paso Natural Gas Company (El Paso) tendered for filing pursuant to Part 154 of the Federal Energy Regulatory Commission's Regulations Under the Natural Gas Act Second Revised Sheet No. 254 to its Second Revised Volume No. 1–A Tariff.

El Paso states that the tendered tariff sheet proposes to revise certain tariff provisions applicable to its Gas Research Institute (GRI) Funding Mechanism to provide that when a Releasing Shipper releases capacity at less than the maximum reservation charge(s) and reservation surcharge(s), pursuant to the provisions of Section 28.4 of El Paso's Second Revised Volume No. 1–A Tariff, the GRI reservation surcharge(s) will be the first rate increment discounted. El Paso further states that it will not assess the GRI reservation surcharge(s) on any capacity that is released and acquired at a discount greater than the GRI reservation surcharge(s).

El Paso respectfully requested that the Commission accept the tendered tariff sheet for filing and permit it to become effective on July 1, 1995. El Paso states that it is requesting this effective date to coincide with its monthly accounting and billing cycle.

El Paso states that copies of the filing were served upon all of El Paso's interstate pipeline system transportation customers and interested state regulatory commissions.

Any person desiring to be heard or to protest said filing should file a motion to intervene or protest with the Federal Energy Regulatory Commission, 825 North Capitol Street NE., Washington, DC 20426, in accordance with Sections 385.214 and 385.211 of the Commission's Rules and Regulations. All such motions or protests should be filed on or before June 9, 1995. Protests will be considered by the Commission in determining the appropriate action to be taken, but will not serve to make the protestants parties to the proceeding. Any person wishing to become a party must file a motion to intervene. Copies of this filing are on file with the Commission and are available for public inspection in the Public Reference Room.

Linwood A. Watson, Jr.,

Acting Secretary.

[FR Doc. 95–14018 Filed 6–7–95; 8:45 am]

BILLING CODE 6717–01–M

[Docket No. RP95–321–000]

El Paso Natural Gas Co.; Notice of Tariff Filing

June 2, 1995.

Take notice that on May 31, 1995, El Paso Natural Gas Company (El Paso), tendered for filing pursuant to Part 154 of the Federal Energy Regulatory Commission's Regulations Under the Natural Gas Act and Section 31 of the General Terms and Conditions of its Volume No. 1–A Tariff, certain tariff sheets.

El Paso states that Section 31.4(b) of its tariff provides the mechanism by which El Paso adjusts the interest calculated on the unrecovered balance of its stranded investment cost in the Washington Ranch Storage Facility and then adjusts the Monthly Amortized Amount allocated to each Shipper. The tariff further provides that El Paso will adjust its rates for any differences resulting from the use of the estimated interest versus the actual interest and such difference shall be added to or deducted from the estimated interest for the upcoming six (6) month period.

El Paso states that the Monthly Amortized Amount has been adjusted to reflect the projected interest and the difference in the previously estimated interest and actual interest utilizing the appropriate interest rate calculated pursuant to Section 154.67(c)(2)(iii) of the Commission's Regulations. El Paso states that the projected interest was calculated on the remaining unrecovered balance of the stranded investment costs. El Paso states that the revised Washington Ranch Reservation Surcharges and resulting Monthly Billed Amounts are shown on the tendered tariff sheets.

El Paso respectfully requests that the Commission accept the tendered tariff sheets for filing and permit them to become effective on July 1, 1995, which is not less than thirty (30) days after the date of the filing.

El Paso states that copies of the filing were served upon all of El Paso's affected interstate pipeline system transportation customers and interested state regulatory commissions.

Any person desiring to be heard or to protest said filing should file a motion to intervene or protest with the Federal Energy Regulatory Commission, 825 North Capitol Street NE., Washington, DC 20426, in accordance with Sections 385.214 and 385.211 of the Commission's Rules and Regulations. All such motions or protests should be filed on or before June 9, 1995. Protests will be considered by the Commission in determining the appropriate action to be taken, but will not serve to make protestants parties to the proceeding. Any person wishing to become a party must file a motion to intervene. Copies of this filing are on file with the Commission and are available for public inspection in the Public Reference Room.

Linwood A. Watson, Jr.,

Acting Secretary.

[FR Doc. 95–14017 Filed 6–7–95; 8:45 am]

BILLING CODE 6717–01–M

[Docket No. RP95–323–000]

Southern Natural Gas Co.; Notice of Transition Cost Recovery Filing

June 2, 1995.

Take notice that on May 31, 1995, Southern Natural Gas Company (Southern) set forth its revised demand surcharges that will be charged in connection with its recovery of transition costs associated with payments made by Company (1) under contracts for the transmission and compression of gas by others, (2) to terminate or reduce the cost or volume obligations under existing transmission and compression agreements, and (3) to Southern Energy Company pursuant to Section 6 of its FERC Gas Tariff, Original Volume No. 1 during the period February 1, 1995 through April 30, 1995. These costs have arisen as a direct result of customers' elections during restructuring to terminate their sales entitlements under Order No. 636.

Southern submitted the following tariff sheets to its FERC Gas Tariff, Seventh Revised Volume No. 1, the following tariff sheets, with the proposed effective date of July 1, 1995.

Nineteenth Revised Sheet No. 15
Second Revised Sheet No. 15a
Nineteenth Revised Sheet No. 17
Second Revised Sheet No. 17a

Southern states that copies of the filing were served upon Southern's customers and interested state commissions.

Any person desiring to be heard or to protest said filing should file a motion to intervene or protest with the Federal Energy Regulatory Commission, 825 North Capitol Street NE., Washington, DC 20426, in accordance with Rules 211 and 214 of the Commission's Rules of Practice and Procedure. All such motions or protests should be filed on or before June 9, 1995. Protests will be considered by the Commission in determining the appropriate action to be taken, but will not serve to make protestants parties to the proceeding. Any person wishing to become a party must file a motion to intervene. Copies

of Southern's filing are on file with the Commission and are available for public inspection.

Linwood A. Watson, Jr.,

Acting Secretary.

[FR Doc. 95–14016 Filed 6–7–95; 8:45 am]

BILLING CODE 6717–01–M

[Docket No. RP95–324–000]

Southern Natural Gas Co.; Notice of GSR Cost Recovery Filing

June 2, 1995.

Take notice that on May 31, 1995, Southern Natural Gas Company (Southern) set forth its revised demand surcharges and revised interruptible rates that will be charged in connection with this recovery of GSR cots associated with the payment of price differential costs under realigned gas supply contracts or contract buyout costs associated with continuing realignment efforts during the period February 1, 1995 through April 30, 1995. These GSR costs have arisen as a direct result of customers' elections during restructuring to terminate their sales entitlements under Order No. 636.

Southern submitted the following tariff sheets to its FERC Gas Tariff, Seventh Revised Volume No. 1, with the proposed effective date of July 1, 1995.

Eighteenth Revised Sheet No. 15
Eighteenth Revised Sheet No. 17
Eleventh Revised Sheet No. 18

Southern states that copies of the filing were served upon Southern's customers and interested state commissions.

Any person desiring to be heard or to protest said filing should file a motion to intervene or protest with the Federal Energy Regulatory Commission, 825 North Capitol Street NE., Washington, DC 20426, in accordance with Rules 211 and 214 of the Commission's Rules of Practice and Procedure. All such motions or protests should be filed on or before June 2, 1995. Protests will be considered by the Commission in determining the appropriate action to be taken, but will not serve to make protestants parties to the proceeding. Any person wishing to become a party must file a motion to intervene. Copies of Southern's filing are on file with the Commission and are available for public inspection.

Linwood A. Watson, Jr.,

Acting Secretary.

[FR Doc. 95–14015 Filed 6–7–95; 8:45 am]

BILLING CODE 6717–01–M

[Docket No. RP95–325–000]

El Paso Natural Gas Co.; Notice of Request for Approval of Procedures

June 2, 1995.

Take notice that on May 31, 1995, El Paso Natural Gas Company (El Paso) submitted a Notice of Procedures for Implementation of Gas Research Institute (GRI) crediting of 1994 GRI over-collections as a result of the Federal Energy Regulatory Commission's May 3, 1995, order issued at Docket No. RP95–124–001. El Paso requested that the Commission approve this methodology so that El Paso can coordinate with GRI to facilitate Releasing and Acquiring Shippers receiving any applicable GRI collections which were assessed to such shippers for capacity released at less than the maximum reservation charge(s) and reservation surcharge(s).

El Paso states that once the Commission approves this methodology, El Paso will provide GRI with the necessary amounts in order to facilities GRI's return to El Paso of all GRI collections which were assessed to Releasing and Acquiring Shippers for capacity released at less than the maximum rate, i.e., the discount exceeded the GRI surcharge rate. El Paso states that it thereafter will immediately flow-through these funds to all affected shippers.

El Paso states that based on this methodology, GRI will refund and El Paso will flow-through 1994 over-collections of $1,848,012.51 to all affected shippers: $1,361,521.39 to Releasing Shippers and $486,491.12 to Acquiring Shippers.

El Paso states that assuming the Commission approves El Paso's proposed July 1, 1995, effective date for its concurrent tariff filing, El Paso will cease GRI collections on the capacity release transactions where the discount is greater than the GRI surcharge beginning with July, 1995 business and calculate and flow-through 1995 over-collections through June 30, 1995 utilizing identical procedures as it used for the 1994 over-collections.

El Paso states that copies of the filing were served upon all affected transportation customers of El Paso and interested state regulatory commissions.

Any person desiring to be heard or to protest said filing should file a motion to intervene or protest with the Federal Energy Regulatory Commission, 825 North Capitol Street, NE., Washington, DC 20426, in accordance with Sections 385.214 and 385.211 of the Commission's Rules and Regulations. All such motions or protests should be filed on or before June 9, 1995. Protests will be considered by the Commission in determining the appropriate action to be taken, but will not serve to make protestants parties to the proceeding. Any person wishing to become a party must file a motion to intervene. Copies of this filing are on file with the Commission and are available for public inspection in the Public Reference Room.

Linwood A. Watson, Jr.,

Acting Secretary.

[FR Doc. 95–14014 Filed 6–7–95; 8:45 am]

BILLING CODE 6717–01–M

[Docket No. TM95–4–32–000]

Colorado Interstate Gas Co.; Notice of Tariff Filing

June 2, 1995.

Take notice that on May 31, 1995, Colorado Interstate Gas Company (CIG) filed as part of its FERC Gas Tariff, First Revised Volume No. 1, Twelfth Revised Sheet No. 11, reflecting a decrease in the fuel reimbursement percentage for Lost, Unaccounted-For and Other Fuel Gas from (1.08%) to (1.16%) effective July 1, 1995.

CIG states that copies of this filing have been served on CIG's jurisdictional customers and public bodies.

Any person desiring to be heard or to protest said filing should file a motion to intervene or a protest with the Federal Energy Regulatory Commission, 825 North Capitol Street NE., Washington, DC 20426, in accordance with Sections 385.211 and 385.214 of the Commission's Rules of Practice and Procedure (18 CFR Sections 385.214 and 385.211). All such petitions or protests should be filed on or before June 9, 1995. Protests will be considered by the Commission in determining the appropriate action to be taken, but will not serve to make protestants parties to the proceeding. Any person wishing to become a party must file a motion to intervene. Copies of this filing are on file with the Commission and are available for public inspection in the Public Reference Room.

Linwood A. Watson, Jr.,

Acting Secretary.

[FR Doc. 95–14013 Filed 6–7–95; 8:45 am]

BILLING CODE 6717–01–M

[Docket No. CP95–502–000, et al.]

Columbia Gas Transmission Corporation, et al.; Natural Gas Certificate Filings

June 1, 1995.

Take notice that the following filings have been made with the Commission:

1. Columbia Gas Transmission Corporation

[Docket No. CP95–502–000]

Take notice that on May 17, 1995, Columbia Gas Transmission Corporation (Columbia), 1700 MacCorkle Avenue, S.E., Charleston, West Virginia 25314, filed in Docket No. CP95–502–000 a request pursuant to Sections 157.205 and 157.211 of the Commission's Regulations under the Natural Gas Act (18 CFR 157.205, 157.211) for authorization to operate as jurisdictional facilities, two existing delivery point facilities, constructed under Section 311 (a) of the Natural Gas Policy Act of 1978, under Columbia's blanket certificate issued in Docket No. CP83–76–000 pursuant to Section 7 of the Natural Gas Act, all as more fully set forth in the request that is on file with the Commission and open to public inspection.

Columbia proposes to operate as jurisdictional facilities an existing delivery point located in Stark County, Ohio to serve Power Resources Operating Company and an existing delivery point located in Clay County, West Virginia to serve Wagner Gas Company. Columbia asserts that these facilities would be used for Part 284 Subpart G transportation service under Columbia's Blanket Certificate in Docket No. CP86–240–000. Columbia states that deliveries to the Stark County point, which cost $35,400, would be 4,000 Dth of gas per day and deliveries to the Clay County point, which cost $13,562, would be 10 Dth of gas per day.

Columbia states that the quantities of gas to be provided through the new delivery points would be within its authorized level of services and there would be no adverse impact on its existing customers.

Comment date: July 17, 1995, in accordance with Standard Paragraph G at the end of this notice.

2. ANR Pipeline Company

[Docket No. CP95–507–000]

Take notice that on May 22, 1995, ANR Pipeline Company (ANR), 500 Renaissance Center, Detroit, Michigan 48243, filed a request with the Commission in Docket No. CP95–507–000 pursuant to Sections 157.205 and 157.211 of the Commission's Regulations under the Natural Gas Act (NGA) to construct and operate an interconnection to the City of Gallatin (Gallatin), authorized in blanket certificate issued in Docket No. CP82–480–000, all as more fully set forth in the request on file with the Commission and open to public inspection.

ANR proposes to construct an interconnection which would consist of a tie-in that would provide delivery of natural gas to the City of Gallatin, located in Harrison County, Missouri. The interconnection would consist of a tie-in to ANR's existing 4-inch lateral, one 2-inch turbine meter, one 2-inch displacement meter, electronic measurement and a yard building in addition to approximately 100 feet of 3-inch yard pipe. ANR states that the costs of the proposed facilities would be approximately $162,000 and further states that facilities would provide Gallatin with a maximum capacity of 10 Mmcf/d.

Comment date: July 17, 1995, in accordance with Standard Paragraph (G) at the end of this notice.

3. Northern Natural Gas Company

[Docket No. CP95–515–000]

Take notice that on May 24, 1995, Northern Natural Gas Company (Northern), 1111 South 103rd Street, Omaha, Nebraska 68124–1000, filed a prior notice request with the Commission in Docket No. CP95–515–000 pursuant to Section 157.205 of the Commission's Regulations under the Natural Gas Act (NGA) for authorization to upgrade an existing delivery point in Cumings County, Nebraska, under Northern's blanket certificate issued in Docket No. CP82–401–000 pursuant to Section 7 of the NGA, all as more fully set forth in the request which is open to the public for inspection.

Northern proposes to upgrade the existing West Point Town Border Station (TBS) #1, Cumings County, Nebraska, in order to accommodate natural gas deliveries to UtiliCorp United Inc. (UCU) under currently effective throughput service agreements. Northern states that the incremental peak day and annual gas deliveries at the West Point TBS #1 would increase by 451 MMBtu and 17,740 MMBtu, respectively. Northern further states that the total volumes to be delivered to UCU would not exceed the currently certificated volumes and that Northern's tariff does not prohibit the proposed upgrade.

Northern also states that the upgrade would enable Northern to meet peak day requirements, maintain the operational integrity and efficiency of the meter, and assure UCU's continuous service to their residential, industrial, and commercial customers. Northern estimates that the proposed West Point TBS #1 upgrade would cost approximately $15,000.

Comment date: July 17, 1995, in accordance with Standard Paragraph (G) at the end of this notice.

4. Enron Gulf Coast Gathering, Limited Partnership

[Docket No. CP95–516–000]

Take notice that on May 25 1995, Enron Gulf Coast Gathering, Limited Partnership (EGCG), P. O. Box 1188, Houston, Texas 77251–1188, filed a petition in Docket No. CP95–516–000, requesting that when EGCG acquires Northern Natural Gas Company's (Northern) Matagorda Offshore Pipeline System (MOPS), located in offshore and onshore Texas, that the Commission declare that the MOPS facilities are gathering facilities exempt from the provisions of the Natural Gas Act (NGA), all as more fully set forth in the petition which is on file with the Commission and open to public inspection.

It is stated that on May 24, 1995, EGCG and Northern entered into a contract where EGCG will acquire MOPS from Northern, subject to certain conditions, including a determination by the Commission that the MOPS' facilities are nonjurisdictional gathering facilities not subject to Commission jurisdiction under Section 1(b) of the NGA. EGCG states that after abandonment of MOPS by Northern and its transfer to EGCG, it will still be subject to the Outer Continental Shelf Lands Act (OCSLA). EGCG asserts that it will provide open and nondiscriminatory access to all shippers in accordance with Section 5(f) of the OCSLA by offering gathering, treating, dehydrating and compression services to producers and shippers seeking such services.

EGCG submits that MOPS meets the criteria of ''gathering facilities'' under Section 1(b) of the NGA as interpreted by the Commission under the ''modified primary function'' test, as set forth in *Amerada Hess Corp., et al.,* as amended. 52 FERC ¶ 61,268 (1990). EGCG notes that the pipeline diameters in MOPS vary from 4″ for the smallest tie lines up to 24″ for the final segment of the line which gathers the gas before being dehydrated and delivered to any of seven onshore delivery points on interstate and intrastate downstream pipelines. EGCG states that the diameter of the larger lines is simply a function of the number of tie lines and wells, the

fact that it is an offshore pipeline and the distance of the gas from interconnecting points to the market. EGCG argues that it must be recognized that the capacity of a given pipeline is a function not only of the diameter of the pipe, but also of the pressure at which the line is operated and the geographic area where it is located. EGCG notes that, typically, pipelines operating in the Gulf Coast are operated at high pressures.

EGCG relates that the central point for this analysis is Tivoli. EGCG says that the system's configuration is similar to that in *Koch Hydrocarbon Corp.*, 59 FERC ¶ 61,110 (1992), where the Commission found as significant the fact that the stubs downstream of a plant were relatively short in length as compared to the remaining gathering system. EGCG states the minimal facilities downstream of Tivoli are necessary for the gas production to reach various interconnection facilities. EGCG states that the geographic configuration is similar to an inverted ''y'', typical of other offshore systems found to be gathering, and that the aggregate length of all the gathering pipeline in MOPS is 101 miles which EGCG says supports a finding that the configuration of the system and the distance between the area of production and the nearest interconnecting points with transmission facilities of an interstate or intrastate pipeline are consistent with the criteria which constitutes gathering.

EGCG indicates that the wells attached to MOPS are located throughout the Texas Gulf Coast producing areas where Northern operates its MOPS facilities. EGCG states that the MOPS facilities gather gas from various producing areas in the OCS for ultimate delivery to Tivoli, and redelivery to any of seven onshore transporters. EGCG further relates that the gas flowing through the system is unprocessed gathered gas, and if compressor facilities are needed, the gas is compressed on Northern's MAT 686 platform to a pressure sufficient to allow the gas to flow into the downstream onshore dehydration facilities and to third party separation facilities located onshore at Tivoli or to onshore delivery points. EGCG says the pressure at which MOPS usually operates is 1,200 psig, which the Commission has found to be consistent with that of offshore gathering systems. Finally, EGCG relates that upon EGCG's purchase of MOPS, those facilities will be owned and operated by an entity which will be engaged in the gathering of natural gas on the OCS as its primary business.

EGCG requests that its petition be consolidated with Northern's abandonment application filed in Docket No. CP95–519–000 which involves the abandonment by sale of what is commonly known as Northern's MOPS facilities.

Comment date: June 22, 1995, in accordance with the first subparagraph of Standard Paragraph F at the end of this notice.

5. Northern Natural Gas Company

[Docket No. CP95–517–000]

Take notice that on May 25, 1995, Northern Natural Gas Company, (Northern), P.O. 3330, Omaha Nebraska 68103–0330, filed in Docket No. CP95–517–000 a request for an order declaring that certain facilities be functionalized as transmission facilities for rate purposes and requests expedited action, all as more fully set forth in the petition which is on file with the Commission and open to public inspection.

Northern lists certain facilities in its Exhibit 1 and states that such facilities are located on Northern's transmission system and perform purification and/or dehydration of natural gas in interstate commerce. Northern states that application of the primary function test leads to the conclusion that these facilities serve transmission-related functions and, therefore, the costs associated with the facilities are appropriately recovered in Northern's transmission rates.

Comment date: June 22, 1995, in accordance with Standard Paragraph F at the end of this notice.

6. Transwestern Pipeline Company

[Docket No. CP95–518–000]

Take notice that on May 25, 1995, Transwestern Pipeline Company (Transwestern), 1400 Smith Street, P.O. Box 1188, Houston, Texas 77251–1188, filed in Docket No. CP95–518–000 a request pursuant to Sections 157.205 and 157.211 of the Commission's Regulations under the Natural Gas Act (18 CFR 157.205, 157.211) for authorization to construct and operate two taps and two valves as a new point of delivery in Mohave County, Arizona under Transwestern's blanket certificate issued in Docket No. CP82–534–000 pursuant to Section 7 of the Natural Gas Act, all as more fully set forth in the request that is on file with the Commission and open to public inspection.

Transwestern proposes to install and operate two taps and two side valves as a new point of delivery to North Star Steel Company.

Comment date: July 17, 1995, in accordance with Standard Paragraph (G) at the end of this notice.

7. Northern Natural Gas Company

[Docket No. CP95–519–000]

Take notice that on May 25, 1995, Northern Natural Gas Company (Northern), 1111 South 103rd Street, Omaha, Nebraska 68124–1000, filed, in Docket No. CP95–519–000, an application pursuant to Section 7(b) of the Natural Gas Act (NGA) and Part 157 of the Commission's Regulations for permission and approval to abandon, by sale to Enron Gulf Coast Gathering, Limited Partnership (EGCG), its interest in certain compression, pipeline, and dehydration facilities, with appurtenances, located in offshore and onshore Texas, and more commonly known as Northern's Matagorda Offshore Pipeline System (MOPS) facilities, as more fully set forth in the application which is on file with the Commission and open to public inspection.

Northern states that the MOPS facilities are non-contiguous to Northern's traditional transmission pipeline system and are no longer needed by Northern as its role in the marketplace has changed from a merchant of natural gas to a transporter of natural gas. Northern relates that the MOPS facilities are located on the Outer Continental Shelf (OCS) and are subject to Sections 5(e) and 5(f) of the OCS Lands Act (OCSLA), 43 USC § 1334 (e) and (f). Northern states that it proposes to transfer its interest in the MOPS facilities to an affiliated company, EGCG, which will operate the facilities on a non-jurisdictional basis. Northern notes that upon its abandonment of the facilities, EGCG will be subject to the OCSLA.

Northern states it is currently providing transportation service on the facilities which will be terminated on the effective date of the sale of the MOPS facilities to EGCG. Northern says that EGCG will assume Northern's obligations and perform the services needed as non-jurisdictional gathering services during the remaining term for any transportation contracts whose primary terms have not expired by the effective date of the sale. Northern has submitted in Exhibit U, Part 2, a proposed default agreement to be used by EGCG to provide continuity of service to existing customers utilizing the MOPS facilities.

Northern says it will be seeking abandonment of Rate Schedule X–87 (an exchange agreement with TGPL) and Rate Schedule X–103 (an exchange agreement with Pan-Alberta Gas Inc.),

both which contain receipt and delivery points on the MOPS facilities. Northern requests that if abandonment authorization for these two rate schedules has not been received prior to the approval of the instant application, that abandonment authorization be issued concurrently.

Exhibit T to the application identifies the receipt and delivery points on MOPS facilities which Northern will eliminate upon abandonment.

Exhibit X to the application contains pro forma tariff sheet No. 221 to be included in Northern's FERC Gas Tariff, Fifth Revised Volume No. 1. The pro forma tariff sheet sets forth language for standards of conduct for affiliate gathering consistent with recent Commission direction. *Field Gas Gathering Inc.*, 67 FERC ¶ 61,259 (1994).

Northern states that EGCG will be assuming the entire economic risk of the MOPS facilities and any remaining service obligations associated with the MOPS facilities. Northern asserts that it will not seek any Order No. 636, *et al.* stranded facility costs associated with its MOPS facilities.

Northern requests that its petition in Docket No. CP95–519–000 be consolidated with EGCG's Petition for a Declaratory Order in Docket No. CP95–516–000 which seeks a determination that the MOPS facilities, once conveyed to EGCG, are gathering facilities not subject to the Commission's jurisdiction pursuant to Section 1(b) of the NGA.

Comment date: June 22, 1995, in accordance with Standard Paragraph (F) at the end of this notice.

8. Northwest Pipeline Corporation

[Docket No. CP95–521–000]

Take notice that on May 25, 1995, Northwest Pipeline Corporation (Northwest), 295 Chipeta Way, Salt Lake City, Utah 84158, filed in Docket No. CP95–521–000 a request pursuant to Sections 157.205, 157.211 and 157.216 of the Commission's Regulations under the Natural Gas Act (18 CFR 157.205, 157.211) for authorization to abandon delivery point facilities and construct and operate replacement facilities in Snohomish County, Washington, to accommodate deliveries of natural gas to Cascade Natural Gas Corporation (Cascade), under Northwest's blanket certificate issued in Docket No. CP82–433–000 pursuant to Section 7 of the Natural Gas Act, all as more fully set forth in the request that is on file with the Commission and open to public inspection.

Northwest proposes to modify its existing Deming Meter Station by replacing obsolete metering facilities with new ones. It is stated that the replacement is necessary to accommodate more efficient deliveries to Cascade and to increase the capacity of the meter station. The cost of the proposed modification of facilities is estimated at $46,020, including both removal and construction. It is asserted that Northwest is authorized to provide a firm transportation service for Cascade under the terms of its Rate Schedules TF–1 and TF–2. It is asserted that no significant impact on Northwest's peak day or annual deliveries will result from the proposed modification of the Deming Meter Station.

Comment date: July 17, 1995, in accordance with Standard Paragraph (G) at the end of this notice.

9. Williams Natural Gas Company

[Docket No. CP95–525–000]

Take notice that on May 25, 1995, Williams Natural Gas Company (WNG), P.O. Box 3288, Tulsa, Oklahoma 74101, filed in Docket No. CP95–525–000 a request pursuant to Sections 157.205, 157.216, 157.208 and 157.212 of the Commission's Regulations under the Natural Gas Act (18 CFR 157.205, 157.216, 157.208, 157.212) for authorization: (1) to abandon approximately 3.7 miles of WNG's South Iola 8-inch pipeline and to construct and operate approximately 3.7 miles of replacement 6-inch pipeline; (2) to construct approximately 1.2 miles of 6-inch pipeline to connect WNG's existing Iola 8-inch pipeline and its new South Iola 6-inch pipeline; (3) to relocate two domestic customers and the Western Resources, Inc. Dry Lake town border from the South Iola 8-inch pipeline to the new 6-inch pipeline and (4) to relocate the Coffman meter setting from the Iola 8-inch pipeline to the new South Iola 6-inch pipeline, all located in Allen County, Kansas, under WNG's blanket certificate issued in Docket No. CP82–479–000 pursuant to Section 7 of the Natural Gas Act, all as more fully set forth in the request that is on file with the Commission and open to public inspection.

WNG states that since it will operate the new 6-inch pipeline at a higher pressure than the existing 8-inch pipeline, it does not anticipate any change in delivery capability. WNG estimates the total construction cost to be $803,000.

Comment date: July 22, 1995, in accordance with Standard Paragraph (G) at the end of this notice.

10. Columbia Gas Transmission Corporation

[Docket No. CP95–527–000]

Take notice that on May 26, 1995, Columbia Gas Transmission Corporation (Columbia), P.O. Box 1273, Charleston, West Virginia 25325–1273, filed in Docket No. CP95–527–000 an abbreviated joint application pursuant to Section 7(b) of the Natural Gas Act, as amended, and Sections 157.7 and 157.18 of the Federal Energy Regulatory Commission's (Commission) regulations thereunder, for permission and approval to abandon a natural gas transportation service for Weirton Steel Corporation (Weirton Steel)[1], all as more fully set forth in the application which is on file with the Commission and open to public inspection.

Columbia states that it received up to 35,000 Dth per day of gas for Weirton Steel's account from Kentucky-West Virginia Gas Company (Kentucky West) at existing points of interconnection near Maytown or Dwale, Floyd County, Kentucky. It is indicated that Columbia then transported this gas under authority granted by the Commission in Docket No. CP83–364–000[2] and under Rate Schedule X–111 on an interruptible basis, less retainage, for the account of Weirton Steel to Mountaineer Gas Company (Mountaineer)[3] for ultimate delivery to Weirton Steel's plant in Weirton, West Virginia. Columbia further states that its obligation to transport the gas was subject to the limits of available capacity in its existing facilities, to its obligation to customers served pursuant to its FERC Gas Tariff, Volume No. 1, to the transportation of Columbia's own gas production and purchases, and to precedent transportation and exchange agreements.

Columbia indicates that it provided written notice to National Steel and to Weirton Steel on July 6, 1993, of termination of the transportation agreement. Columbia states that volumes were last transportation under Rate Schedule X–111 in January 1983 and there are no outstanding imbalances.

Comment date: June 22, 1995, in accordance with Standard Paragraph (G) at the end of this notice.

Standard Paragraphs

F. Any person desiring to be heard or to make any protest with reference to said application should on or before the comment date, file with the Federal

[1] Formerly National Steel Group

[2] *See* order at 27 FERC ¶ 61,368 (1984)

[3] Formerly Columbia Gas of West Virginia, Inc.

Energy Regulatory Commission, Washington, D.C. 20426, a motion to intervene or a protest in accordance with the requirements of the Commission's Rules of Practice and Procedure (18 CFR 385.214 or 385.211) and the Regulations under the Natural Gas Act (18 CFR 157.10). All protests filed with the Commission will be considered by it in determining the appropriate action to be taken but will not serve to make the protestants parties to the proceeding. Any person wishing to become a party to a proceeding or to participate as a party in any hearing therein must file a motion to intervene in accordance with the Commission's Rules.

Take further notice that, pursuant to the authority contained in and subject to the jurisdiction conferred upon the Federal Energy Regulatory Commission by Sections 7 and 15 of the Natural Gas Act and the Commission's Rules of Practice and Procedure, a hearing will be held without further notice before the Commission or its designee on this application if no motion to intervene is filed within the time required herein, if the Commission on its own review of the matter finds that a grant of the certificate and/or permission and approval for the proposed abandonment are required by the public convenience and necessity. If a motion for leave to intervene is timely filed, or if the Commission on its own motion believes that a formal hearing is required, further notice of such hearing will be duly given.

Under the procedure herein provided for, unless otherwise advised, it will be unnecessary for applicant to appear or be represented at the hearing.

G. Any person or the Commission's staff may, within 45 days after issuance of the instant notice by the Commission, file pursuant to Rule 214 of the Commission's Procedural Rules (18 CFR 385.214) a motion to intervene or notice of intervention and pursuant to Section 157.205 of the Regulations under the Natural Gas Act (18 CFR 157.205) a protest to the request. If no protest is filed within the time allowed therefor, the proposed activity shall be deemed to be authorized effective the day after the time allowed for filing a protest. If a protest is filed and not withdrawn within 30 days after the time allowed for filing a protest, the instant request shall be treated as an application for authorization pursuant to Section 7 of the Natural Gas Act.

Linwood A. Watson, Jr.,

Acting Secretary.

[FR Doc. 95–14058 Filed 6–7–95; 8:45 am]

BILLING CODE 6717–01–P

[Project No. 11265–001 Oregon]

Portland General Electric Co.; Notice of Surrender of Preliminary Permit

June 2, 1995.

Take notice that Portland General Electric Company, Permittee for the Clackamas Creeks Project No. 11265, has requested that its preliminary permit be terminated. The preliminary permit for Project No. 11265 was issued June 29, 1992, and would have expired May 31, 1995. The project would have been located on the Clackamas River, Clackamas County, Oregon.

The Permittee filed the request on May 15, 1995, and the preliminary permit for Project No. 11265 shall remain in effect through the thirtieth day after issuance of this notice unless that day is a Saturday, Sunday or holiday as described in 18 CFR 385.2007, in which case the permit shall remain in effect through the first business day following that day. New applications involving this project site, to the extent provided for under 18 CFR Part 4, may be filed on the next business day.

Linwood A. Watson, Jr.,

Acting Secretary.

[FR Doc. 95–14027 Filed 6–7–95; 8:45 am]

BILLING CODE 6717–01–M

ENVIRONMENTAL PROTECTION AGENCY

[FRL–5219–3]

Notice of Meeting on Targeted Legislative Changes to RCRA

AGENCY: U.S. Environmental Protection Agency.

ACTION: Notice of meeting.

SUMMARY: On April 28, 1995, EPA announced in the **Federal Register** (volume 60, No. 82: 20992) an opportunity for interested individuals to present their ideas and suggestions for improving the solid and hazardous waste system under RCRA. This notice announces an additional meeting that EPA has scheduled for June 13, 1995. This additional meeting will focus primarily on issues faced by communities and small businesses. A limited number of individuals have been invited to sit on a panel and participate in a public, facilitated dialogue on various issues. Space is available for other members of the public to observe and comment on the dialogue as well. EPA's notice of April 28, 1995 also provided information on the initiative, and solicited input from all interested individuals.

DATES: EPA will accept public comments on this initiative until June 15, 1995. Both written and electronic comments must be submitted on or before this date.

An additional public panel discussion has been scheduled. Representatives from a cross-section of communities, local environmental interest groups, Environmental Justice groups, small businesses and states will be invited to participate in a panel discussion. There will also be an opportunity for public comment.

ADDRESSES: The Meeting (open to the public) will be held as follows: June 13, 1995, 9 a.m. until 4 p.m., Crystal City Marriott, 1999 Jefferson Davis Highway, Washington, DC 22202. Commenters must send an original and two copies of their comments referencing docket number F–95–LRRA–FFFFF to: RCRA Docket Information Center (5305), Office of Solid Waste (5305), U.S. Environmental Protection Agency (EPA, HQ), 401 M Street, SW., Washington, DC 20460.

Comments also may be submitted electronically by sending electronic mail to RCRA-Docket@epamail.epa.gov. Comments in electronic format should also be identified by the docket number F–95–LRRA–FFFFF. All electronic comments must be submitted as an ASCII file avoiding the use of special characters and any form of encryption. Comments will also be accepted on 3.5″ disks in WordPerfect in 5.1 file format or ASCII file format.

Commenters should not submit electronically any Confidential Business Information (CBI). An original and two copies of CBI must be submitted under separate cover to: RCRA CBI Control Officer, Office of Solid Waste (5305), U.S. EPA, 401 M Street, SW., Washington, DC 20460.

Public comments and relevant documents are available for viewing in the RCRA Information Center (RIC) located in room M2616, at the EPA address listed above. The RIC is open from 9 a.m. to 4 p.m. Monday through Friday, excluding Federal holidays. To review docket materials, the public must make an appointment by calling (202) 260–9327. Materials may be copied for $0.15 per page. Charges under $25.00 are waived. For information on accessing paper and/or electronic copies of the materials, see the **SUPPLEMENTARY INFORMATION** Section.

Individuals interested in the June 13 meeting should contact Denise Madigan of JAMS–ENDISPUTE at (202) 942–9180 if you wish to attend, as space may be limited.

FOR FURTHER INFORMATION CONTACT: One of the following individuals at EPA in the Office of Solid Waste, RCRA Legislative Reform Team may be contacted for further information: David Hockey at (202) 260–7596, Ginny Kronke at (202) 260–4498, or Judy Kertcher at (202) 260–4522.

SUPPLEMENTARY INFORMATION: As called for in the President's plan for ''Reinventing Environmental Regulation'', EPA is seeking to identify a package of targeted legislative improvements to the Resource Conservation and Recovery Act (RCRA). The Agency will consider the views of all stakeholders and communicate the results, findings, and recommendations to Congress by July 15, 1995. EPA is providing an opportunity for interested individuals to present their ideas and suggestions for improving the solid and hazardous waste system under RCRA.

Paper copies of this **Federal Register** and other relevant materials (meeting summaries, public comments) are available in the RCRA Docket at the address listed in the previous section. These materials will also be available in electronic format on the Internet System. Follow these instructions to access information electronically:

Gopher: gopher.epa.gov.
WWW: http://www.epa.gov
Dial-up: (919) 558–0335

These materials can be accessed off the main EPA Gopher menu, in the directory: EPA Offices and Regions/Office of Solid Waste and Emergency Response (OSWER)/Office of Solid Waste (RCRA)/RCRA General/Notice of Meetings

FTP: ftp.epa.gov
Login: Anonymous
Password: Your Internet Address.
Files are located in /pub/gopher/OSWRCRA

The Federal Register notices, minutes of the public meetings, and copies of all comments submitted also will be kept in paper form. Accordingly, EPA will transfer all comments received electronically into printed paper form as they are received, and will place the paper copies in the public record which will place the paper copies in the public record which will also include all comments submitted directly in writing. The official public record is the paper record maintained at the address in ''Addresses'' at the beginning of this notice.

This notice is also available electronically through INDIANnet, operated by Americans for Indian Opportunity. For information and assistance with using INDIANnet, call 1–605–345–9642.

This document is also available on the EPA's Clean-up Information Bulletin Board (CLU-IN). To access CLU-IN with a modem of up to 28,800 baud, dial (301) 589–8366. First-time users will be asked to input some initial registration information. Next, select ''D'' (download) from the main menu. Input the file name ''RCRA.REF'' to download this notice. Follow the on-line instructions to complete the download. For additional help with these instructions, telephone the CLU-IN help line at (301) 589–8368.

Background

The Resource Conservation and Recovery Act has been an enormously effective tool in achieving a dramatic transformation in the way that we manage hazardous waste. RCRA has allowed the Agency to develop a cradle-to-grave system to ensure the protection of human health and the environment when generating, transporting, storing, or disposing of hazardous waste. The Agency believes that a successful legislative process to make targeted changes to RCRA, could make the statute an even more effective tool in safely managing our solid and hazardous waste.

EPA has already held three roundtable meetings as one of its methods of soliciting input from a wide range of stakeholders. This notice announces an additional meeting scheduled for June 13, 1995. This meeting will focus primarily on issues faced by communities and small businesses, such as reporting requirements, public access to information, disproportionate impacts and tailored requirements.

In developing the package of targeted legislative reforms for RCRA, EPA will be following the principles for reinventing environmental protection outlined in the President's plan:

- Protecting public health and the environment is an important national goal, and individuals, businesses and government must take responsibility for the impact of their actions.
- Regulation must be designed to achieve environmental goals in a manner that minimizes costs to individuals, businesses, and other levels of government.
- Environmental regulations must be performance-based, providing maximum flexibility in the means of achieving our environmental goals, but requiring accountability for the results.
- Preventing pollution, not just controlling or cleaning it up, is preferred.
- Market incentives should be used to achieve environmental goals, whenever appropriate.
- Environmental regulation should be based on the best science and economics, subject to expert and public scrutiny, and grounded in values Americans share.
- Government regulations must be understandable to those who are affected by them.
- Decisionmaking should be collaborative, not adversarial, and decisionmakers must inform and involve those who must live with the decisions.
- Federal, state, tribal and local governments must work as partners to achieve common environmental goals, with non-federal partners taking the lead when appropriate.
- No citizen should be subjected to unjust or disproportionate environmental impacts.

Dated: June 6, 1995.

James H. Mathews,

Acting Assistant Administrator, Office of Solid Waste and Emergency Response.

[FR Doc. 95–14194 Filed 6–7–95; 8:45 am]

BILLING CODE 6560–50–M

[OPPTS–59347; FRL–4959–5]

Certain Chemicals; Approval of a Test Marketing Exemption

AGENCY: Environmental Protection Agency (EPA).

ACTION: Notice.

SUMMARY: This notice announces EPA's approval of an application for test marketing exemption (TME) under section 5(h)(1) of the Toxic Substances Control Act (TSCA) and 40 CFR 720.38. EPA has designated this application as TME–95–9. The test marketing conditions are described below.

DATES: This notice becomes effective May 31, 1995. Written comments will be received until June 23, 1995.

ADDRESSES: Written comments, identified by the docket number [OPPTS–59347] and the specific TME number should be sent to: TSCA Nonconfidential Information Center (NCIC), Office of Pollution Prevention and Toxics, Environmental Protection Agency, Rm. NEB–607 (7407), 401 M St., SW., Washington, DC 20460, (202) 554–1404, TDD (202) 554–0551.

Comments and data may also be submitted electronically by sending electronic mail (e-mail) to: ncic@epamail.epa.gov. Electronic comments must be submitted as an ASCII file avoiding the use of special characters and any form of encryption.

Comments and data will also be accepted on disks in WordPerfect in 5.1 file format or ASCII file format. All comments and data in electronic form must be identified by [OPPTS–59347]. No CBI should be submitted through e-mail. Electronic comments on this notice may be filed online at many Federal Depository Libraries. Additional information on electronic submissions can be found under ''SUPPLEMENTARY INFORMATION''.

FOR FURTHER INFORMATION CONTACT: Shirley Howard, New Chemicals Branch, Chemical Control Division (7405), Office of Pollution Prevention and Toxics, Environmental Protection Agency, Rm. E–447H, 401 M St. SW., Washington, DC 20460, (202) 260–3780.

SUPPLEMENTARY INFORMATION: Section 5(h)(1) of TSCA authorizes EPA to exempt persons from premanufacture notification (PMN) requirements and permit them to manufacture or import new chemical substances for test marketing purposes if the Agency finds that the manufacture, processing, distribution in commerce, use, and disposal of the substances for test marketing purposes will not present an unreasonable risk of injury to human health or the environment. EPA may impose restrictions on test marketing activities and may modify or revoke a test marketing exemption upon receipt of new information which casts significant doubt on its finding that the test marketing activity will not present an unreasonable risk of injury.

EPA hereby approves TME–95–9. EPA has determined that test marketing of the new chemical substance described below, under the conditions set out in the TME application, and within the time period and restrictions specified below, will not present an unreasonable risk of injury to human health or the environment. Production volume, use, and the number of customers must not exceed that specified in the application. All other conditions and restrictions described in the application and in this notice must be met.

Inadvertently the notice of receipt of the application was not published. Therefore, an opportunity to submit comments is being offered at this time. EPA may modify or revoke the test marketing exemption if comments are received which cast significant doubt on its finding that the test marketing activities will not present an unreasonable risk of injury.

The following additional restrictions apply to TME–95–9. A bill of lading accompanying each shipment must state that the use of the substance is restricted to that approved in the TME. In addition, the applicant shall maintain the following records until five years after the date they are created, and shall make them available for inspection or copying in accordance with section 11 of TSCA:

1. Records of the quantity of the TME substance produced and the date of manufacture.
2. Records of dates of the shipments to each customer and the quantities supplied in each shipment.
3. Copies of the bill of lading that accompanies each shipment of the TME substance.

TME–95–9

Date of Receipt: April 18, 1995. The extended comment period will close (insert date 15 days after date of publication in the **Federal Register**).

Applicant: IPS Corporation.

Chemical: (G) Polyester polyols.

Use: (G) Industrial Adhesive.

Production Volume: 223 kg.

Number of Customers: 150.

Test Marketing Period: Six months, commencing on first day of commercial manufacture.

Risk Assessment: EPA identified no significant health or environmental concerns for the test market substance. Therefore, the test market activities will not present any unreasonable risk of injury to human health or the environment.

The Agency reserves the right to rescind approval or modify the conditions and restrictions of an exemption should any new information that comes to its attention cast significant doubt on its finding that the test marketing activities will not present any unreasonable risk of injury to human health or the environment.

A record has been established for this notice under docket number [OPPTS–59347] (including comments and data submitted electronically a described above). A public version of this record, including printed, paper versions of electronic comments, which does not include any information calimed as CBI, is avaiable for inspection from 12 noon to 4 p.m., Monday through Friday, excluding legal holidays. The public record is located in the NCIC, at the above address.

The official record for this notice, as well as the public version, as described above will be kept in paper form. Accordingly, EPA will transfer all comments received electronically into printed, paper form as they are received and will place the paper copies in the official record which will also include all comments submitted directly in writing. The official record is the paper record maintained at the address in ''ADDRESSES'' at the beginning of this document.

List of Subjects

Environmental protection, Test marketing exemptions.

Dated: May 31, 1995.

Paul J. Campanella,

Chief, New Chemicals Branch Office of Pollution Prevention and Toxics.

[FR Doc. 95–14064 Filed 6–7–95; 8:45 am]

BILLING CODE 6560–50–F

FEDERAL COMMUNICATIONS COMMISSION

Public Information Collection Requirement Submitted to Office of Management and Budget for Review

June 2, 1995.

The Federal Communications Commission has submitted the following information collection requirements to OMB for review and clearance under the Paperwork Reduction Act of 1980 (44 U.S.C. 3507).

Copies of these submissions may be purchased from the Commission's copy contractor, International Transcription Service, Inc., 2100 M Street, NW., Suite 140, Washington, DC 20037, (202) 857–3800. For further information on this submission contact Dorothy Conway, Federal Communications Commission, (202) 418–0217 or via internet at DConway@FCC.GOV. Persons wishing to comment on this information collection should contact Timothy Fain, Office of Management and Budget, Room 10214 NEOB, Washington, DC 20503, (202) 395–3561.

OMB Number: 3060–0027.

Title: Application for Construction Permit for Commercial Broadcast Station.

Form No.: FCC 301.

Action: Revision to a currently approved collection.

Respondents: Businesses or other for-profit.

Frequency of Response: On occasion.

Estimated Annual Burden: 1,924 responses; 73.6 hour burden per response; 141,611 hours total annual burden.

Needs and Uses: FCC 301 is used to apply for authority to construct a new commercial AM, FM or TV broadcast station, or to make changes to existing facilities. The data is used by FCC staff to determine if the applicant meets basic statutory requirements to become a Commission licensee.

Federal Communications Commission.

LaVera F. Marshall,

Acting Secretary.

[FR Doc. 95–14040 Filed 6–7–95; 8:45 am]

BILLING CODE 6712–01–F

FEDERAL RESERVE SYSTEM

The Bank of New York Company, Inc., et al.; Formations of; Acquisitions by; and Mergers of Bank Holding Companies

The companies listed in this notice have applied for the Board's approval under section 3 of the Bank Holding Company Act (12 U.S.C. 1842) and § 225.14 of the Board's Regulation Y (12 CFR 225.14) to become a bank holding company or to acquire a bank or bank holding company. The factors that are considered in acting on the applications are set forth in section 3(c) of the Act (12 U.S.C. 1842(c)).

Each application is available for immediate inspection at the Federal Reserve Bank indicated. Once the application has been accepted for processing, it will also be available for inspection at the offices of the Board of Governors. Interested persons may express their views in writing to the Reserve Bank or to the offices of the Board of Governors. Any comment on an application that requests a hearing must include a statement of why a written presentation would not suffice in lieu of a hearing, identifying specifically any questions of fact that are in dispute and summarizing the evidence that would be presented at a hearing.

Unless otherwise noted, comments regarding each of these applications must be received not later than July 3, 1995.

A. Federal Reserve Bank of New York (William L. Rutledge, Senior Vice President) 33 Liberty Street, New York, New York 10045:

1. The Bank of New York Company, Inc., New York, New York; to acquire 100 percent of the voting shares of The Putnam Trust Company of Greenwich, Greenwich, Connecticut.

B. Federal Reserve Bank of St. Louis (Randall C. Sumner, Vice President) 411 Locust Street, St. Louis, Missouri 63166:

1. Simmons First National Corporation, Pine Bluff, Arkansas; to merge with DSB Bancshares, Inc., Dermott, Arkansas, and thereby indirectly acquire Dermott State Bank, Dermott, Arkansas.

C. Federal Reserve Bank of Kansas City (John E. Yorke, Senior Vice President) 925 Grand Avenue, Kansas City, Missouri 64198:

1. First State Bancorporation, Albuquerque, New Mexico; to acquire 100 percent of the voting shares of First Bank of Grants, Grants, New Mexico.

Board of Governors of the Federal Reserve System, June 2, 1995.

William W. Wiles,

Secretary of the Board.

[FR Doc. 95–14034 Filed 6–7–95; 8:45 am]

BILLING CODE 6210–01–F

Mountain Bancshares, Inc.; Acquisition of Company Engaged in Permissible Nonbanking Activities

The organization listed in this notice has applied under § 225.23(a)(2) or (f) of the Board's Regulation Y (12 CFR 225.23(a)(2) or (f)) for the Board's approval under section 4(c)(8) of the Bank Holding Company Act (12 U.S.C. 1843(c)(8)) and § 225.21(a) of Regulation Y (12 CFR 225.21(a)) to acquire or control voting securities or assets of a company engaged in a nonbanking activity that is listed in § 225.25 of Regulation Y as closely related to banking and permissible for bank holding companies. Unless otherwise noted, such activities will be conducted throughout the United States.

The application is available for immediate inspection at the Federal Reserve Bank indicated. Once the application has been accepted for processing, it will also be available for inspection at the offices of the Board of Governors. Interested persons may express their views in writing on the question whether consummation of the proposal can ''reasonably be expected to produce benefits to the public, such as greater convenience, increased competition, or gains in efficiency, that outweigh possible adverse effects, such as undue concentration of resources, decreased or unfair competition, conflicts of interests, or unsound banking practices.'' Any request for a hearing on this question must be accompanied by a statement of the reasons a written presentation would not suffice in lieu of a hearing, identifying specifically any questions of fact that are in dispute, summarizing the evidence that would be presented at a hearing, and indicating how the party commenting would be aggrieved by approval of the proposal.

Comments regarding the application must be received at the Reserve Bank indicated or the offices of the Board of Governors not later than June 22, 1995.

A. Federal Reserve Bank of St. Louis (Randall C. Sumner, Vice President) 411 Locust Street, St. Louis, Missouri 63166:

1. Mountain Bancshares, Inc., Yellville, Arkansas; to invest in Financial Institution Services, Inc., Green Forest, Arkansas, a joint venture with First National Bank of Berryville, Berryville, Arkansas, and First National Bank of Green Forest, Green Forest, Arkansas, and thereby engage in providing data processing and data transmission services for financial institutions, pursuant to § 225.25(b)(7) of the Board's Regulation Y. The geographic scope for these activities is Green Forest, Arkansas, and the surrounding area.

Board of Governors of the Federal Reserve System, June 2, 1995.

William W. Wiles,

Secretary of the Board.

[FR Doc. 95–14035 Filed 6–7–95; 8:45 am]

BILLING CODE 6210–01–F

Federal Open Market Committee; Domestic Policy Directive of March 28, 1995

In accordance with § 271.5 of its rules regarding availability of information (12 CFR part 271), there is set forth below the domestic policy directive issued by the Federal Open Market Committee at its meeting held on March 28, 1995.[1] The directive was issued to the Federal Reserve Bank of New York as follows:

The information reviewed at this meeting suggests that the expansion of economic activity has moderated considerably in early 1995. Nonfarm payroll employment rose appreciably further in January and February, but at a pace below the average monthly gain in 1994; the civilian unemployment rate, after rising in January, fell back in February to its December level of 5.4 percent. Advances in industrial production also moderated in January and February, and capacity utilization rates generally changed little from already high levels. Total retail sales were about unchanged over the two months. Housing starts have declined somewhat after posting sizable gains on balance during the closing months of 1994. Orders for nondefense capital goods point to a still strong expansion of spending on business equipment, but with tentative signs of some deceleration; nonresidential construction has been trending appreciably higher. The nominal deficit on U.S. trade in goods and services widened sharply in January from its

[1] Copies of the Minutes of the Federal Open Market Committee meeting of March 28, 1995, which include the domestic policy directive issued at that meeting, are available upon request to the Board of Governors of the Federal Reserve System, Washington, D.C. 20551. The minutes are published in the Federal Reserve Bulletin and in the Board's annual report.

average rate in the fourth quarter. Broad indexes of consumer and producer prices increased faster on average over January and February.

On February 1, 1995, the Board of Governors approved an increase from 4-3/4 to 5-1/4 percent in the discount rate, and in keeping with the Committee's decision at the January 31-February 1 meeting, the increase was allowed to show through fully to interest rates in reserve markets. Nonetheless, most market interest rates have declined somewhat since the Committee meeting; the largest declines have been concentrated in intermediate- and long-term obligations. In foreign exchange markets, the trade-weighted value of the dollar in terms of the other G-10 currencies was down substantially further over the intermeeting period. The Mexican peso has continued to depreciate against the dollar.

M2 and M3 weakened in February, though data for the first part of March pointed to some rebound. Growth of total domestic nonfinancial debt has picked up a little in recent months.

The Federal Open Market Committee seeks monetary and financial conditions that will foster price stability and promote sustainable growth in output. In furtherance of these objectives, the Committee at its meeting on January 31-February 1 established ranges for growth of M2 and M3 of 1 to 5 percent and 0 to 4 percent respectively, measured from the fourth quarter of 1994 to the fourth quarter of 1995. The Committee anticipated that money growth within these ranges would be consistent with its broad policy objectives. The monitoring range for growth of total domestic nonfinancial debt was lowered to 3 to 7 percent for the year. The behavior of the monetary aggregates will continue to be evaluated in the light of progress toward price level stability, movements in their velocities, and developments in the economy and financial markets.

In the implementation of policy for the immediate future, the Committee seeks to maintain the existing degree of pressure on reserve positions. In the context of the Committee's long-run objectives for price stability and sustainable economic growth, and giving careful consideration to economic, financial, and monetary developments, somewhat greater reserve restraint would or slightly lesser reserve restraint might be acceptable in the intermeeting period. The contemplated reserve conditions are expected to be consistent with moderate growth in M2 and M3 over coming months.

By order of the Federal Open Market Committee, June 2, 1995.

Normand Bernard,

Deputy Secretary, Federal Open Market Committee.

[FR Doc. 95–14036 Filed 6–7–95; 8:45 am]

BILLING CODE 6210–01–F

DEPARTMENT OF HEALTH AND HUMAN SERVICES

Agency for Toxic Substances and Disease Registry

[ATSDR–93]

Notice of Intent To Revise the Public Health Assessment Process

AGENCY: Agency for Toxic Substances and Disease Registry (ATSDR), Public Health Service (PHS), Department of Health and Human Services (HHS).

ACTION: Notice of intent to revise ATSDR's public health assessment process.

SUMMARY: This notice announces proposed revisions in ATSDR's current public health assessment process. The revisions are intended to: (1) Produce earlier, more targeted evaluations that can be more effectively integrated into the Superfund Program and; (2) incorporate administrative improvements in ATSDR's Superfund mandates.

This process will begin through a pilot program, which includes an initial appraisal of the impact of program changes by July 30, 1995. The purpose of this pilot is to allow us to effect the planned changes over time, while receiving valuable feedback from all stakeholders, including the Environmental Protection Agency (EPA), State and local environmental and health departments and communities. (The term ''EPA,'' when used to designate the lead Federal remediation agency, applies to respective Federal agencies operating Federal Superfund facilities). An ongoing evaluation of the success of the revised public health assessment process and progress/success of the pilot is essential to the design of the program.

FOR FURTHER INFORMATION CONTACT: Robert C. Williams, P.E., D.E.E., Director, Division of Health Assessment and Consultation, Agency for Toxic Substances and Disease Registry, 1600 Clifton Road, NE., Mailstop E–32, Atlanta Georgia 30333, telephone (404) 639–0610 or FAX 639–0654.

SUPPLEMENTARY INFORMATION: Section 104(i)(6)(A) of the Comprehensive Environmental Response, Compensation, and Liability Act of 1980 (CERCLA), as amended [42 U.S.C. 9604(i)(6)(A)], requires ATSDR to conduct health assessments of sites on or proposed for inclusion on the National Priorities List established by the Environmental Protection Agency (EPA). In addition, section 104(i)(6)(B) of CERCLA provides that any person or group of persons may submit evidence of a release of or exposure to a hazardous substance to ATSDR and request ATSDR to perform a health assessment. Further, section 3019(b) of the Resource Conservation and Recovery Act of 1984 (RCRA), as amended [42 U.S.C. 6939a] provides that when, in the judgment of the U.S. EPA or a State, a landfill or surface impoundment poses a substantial potential risk to human health, the EPA or State may request ATSDR to perform a health assessment.

Under the revised process, neither the definition nor the purpose of public health assessments will change. The purposes of health assessments, as defined by CERCLA, are to assist in determining whether actions should be taken to reduce human exposure to hazardous substances from a facility and whether additional information on human exposure and associated health risks is needed. ATSDR's public health assessments are evaluations of data and information on the release of hazardous substances into the environment in order to assess any current or future impact on public health, develop health advisories or other recommendations, and identify studies or actions needed to evaluate and mitigate or prevent human health effects. These purposes will not change.

Although ATSDR will continue to perform public health assessments, as set out in the legislation, we plan to initiate a phased approach to conducting them. This means that ATSDR may provide input to the EPA, States, and communities at any point in the Superfund process, thus allowing for the possible production of several site-related documents or reports. Those documents could then be utilized by the EPA or State and local health departments as they make decisions (e.g., early actions) related to particular sites. This would ensure that public health perspectives are considered at critical points in the process.

Key phases in the revised process, which are designed to coincide with the EPA's site evaluation and remediation process under Superfund, will include one or more of the following:

(1) *Site Assessment Activities*, which could include performing site visits,

evaluating preliminary environmental characterization data, releasing initial findings and public health decisions, and initializing community involvement and education efforts;

(2) *Sampling Strategies,* which could include participating in the design of multiple media sampling and analysis plans that assist in identifying human exposure pathways;

(3) *Community Health Outreach,* such as initiating early community contact, designing the public health agenda, developing sampling and analysis strategies to help define human exposure levels, and collaborating with decision-makers regarding on- and off-site remediation strategies for characterizing environmental contamination;

(4) *Public Health Evaluation,* which includes the comparison of existing morbidity and mortality data on diseases that may be associated with the observed levels of exposure. Also included are exposure investigations, which involve gathering and analyzing site-specific information, to determine if human populations have been exposed to hazardous substances, and release of comprehensive findings from evaluations;

(5) *Public Health Actions,* which could be short-term, including providing health professional education, medical intervention, and health studies; or long-term actions, which could include providing surveillance, medical monitoring, and registries;

(6) *Remediation and Site Closure Planning,* which could include providing a public health analysis of environmental monitoring plans, evaluating final sampling data, and releasing comprehensive public health findings regarding efficacy of cleanup efforts in mitigating or reducing human exposure; and

(7) *Customer Satisfaction Evaluations* to confirm the effectiveness of activities through reader/customer surveys, pilot projects, questionnaires, and community meetings.

Greater participation of communities and remediation decisionmakers will be fundamental to the implementation of the revised process, and interaction with stakeholders will be an integral part in each of the activities noted above. Community involvement will be emphasized throughout ATSDR's activities. In particular, efforts to facilitate community outreach will be undertaken through actions such as increased use of Public Availability Sessions, poster sessions, direct contact with community groups, focus group workshops for team-building, distribution of Community Notices and Fact Sheets, and establishing Community Assistance Panels. In addition, ATSDR will continue to provide independent peer-review of a sample of our public health assessments.

Dated: June 1, 1995.

Claire V. Broome,

Deputy Administrator, Agency for Toxic Substances and Disease Registry.

[FR Doc. 95–14046 Filed 6–7–95; 8:45 am]

BILLING CODE 4163–70–P

Centers for Disease Control and Prevention

[Announcement 551]

Announcement of Cooperative Agreement to the North Carolina Department of Environment, Health and Natural Resources

Summary

The Centers for Disease Control and Prevention (CDC) announces the availability of funds for fiscal year (FY) 1995 for a sole source cooperative agreement with the North Carolina Department of Environment, Health and Natural Resources (NCDEHNR) to support the Efficacy of a Mandatory Substance Abuse Assessment Program in Reducing Repeat Arrest for Driving While Impaired. Approximately $50,000 is available in FY 1995 to support this project. It is expected the award will begin on or about September 30, 1995, and will be made for a 12-month budget period with a one-year project period. The funding estimate is subject to change based on the availability of funds.

The purpose of this project is to evaluate the effectiveness of the Mandatory Substance Abuse Assessment Program in North Carolina's in decreasing repeat driving while impaired (DWI) arrests. The study will test the following two hypotheses:

1. Drivers convicted of DWI for the first time (first offenders who complete North Carolina's Mandatory Substance Abuse Assessment Program (MSAAP)) will be less likely than other first offenders to have a repeat arrest for DWI.

2. Among first offenders who are subsequently arrested for DWI, the time interval between the first conviction and the second arrest will be greater for those drivers who have completed North Carolina's MSAAP.

The CDC will develop a research protocol for the evaluation of the MSAAP, analyze and interpret the data, produce a report that describes the results of the MSAAP evaluation, and disseminate the results via publication in peer reviewed journals, the MMWR and other literature and means.

The Public Health Service (PHS) is committed to achieving the health promotion and disease prevention objectives of ''Healthy People 2000,'' a PHS-led national activity to reduce morbidity and mortality and improve the quality of life. This announcement is related to the priority area of Unintentional Injuries (Objective 4.1) which calls for a reduction in alcohol-related crash deaths. In addition, *Injury Control in the 1990s: A National Plan for Action* (Recommendation 15) calls for the implementation and strengthening of programs for reducing impaired driving. (For ordering a copy of ''Healthy People 2000,'' see the Section **WHERE TO OBTAIN ADDITIONAL INFORMATION.**)

Authority

This program is authorized under Sections 301, 317, 391, 392 and 394 of the Public Health Service Act, (42 U.S.C. 241, 247b, 280b, 280b-1 and 280b-2), as amended. Program regulations are set forth in 42 CFR Part 52.

Smoke-Free Workplace

PHS strongly encourages all grant recipients to provide a smoke-free workplace and to promote the nonuse of all tobacco products, and Public Law 103–227, the Pro-Children Act of 1994, prohibits smoking in certain facilities that receive Federal funds in which education, library, day care, health care, and early childhood development services are provided to children.

Eligible Applicant

Assistance will be provided only to NCDEHNR. No other applications are solicited. The program announcement and application kit have been sent to NCDEHNR.

NCDEHNR is the only organization able to conduct the work under this cooperative agreement because North Carolina is the only State meeting all of the following requirements:

1. North Carolina requires all drivers who are convicted of driving while impaired (DWI) to obtain a substance abuse assessment and comply with treatment requirements before they can get their license back. This provides an important opportunity to evaluate the effectiveness of mandatory substance abuse assessment and treatment for drivers with a first conviction for DWI (first offenders)—a population who may be more responsive to treatment.

2. North Carolina's substance abuse assessment and treatment requirement

for drivers convicted of DWI is administered along with other license sanctions (e.g., license suspension). Participation in the State's MSAAP does not result in less severe sentencing. This combination of substance abuse assessment and treatment with strict license sanctions is considered the preferred approach to administering such a program; therefore, it is particularly important to determine the effectiveness of such a program.

3. During 1988 and 1989, North Carolina pilot-tested the use of the MSAAP for all first offenders in 10 counties. Consequently, there has been sufficient time since then to evaluate the long-term effect of the program on the driving behavior of program participants.

4. The Injury Control Program in the NCDEHNR was recently involved in a study to assess the risk of dying in alcohol-related motor vehicle crashes among drivers who were arrested for DWI. The evaluation of the State's MSAAP will build on this research by assessing the effectiveness of mandatory substance abuse assessment and treatment in reducing the risk of rearrest for DWI.

5. NCDEHNR works closely with the State's Highway Safety Research Center (HSRC). The HSRC retains copies of the State's driver history files—which will be used for this evaluation—and provides the programming and technical assistance needed to work with the State's driver history files.

Executive Order 12372 Review

This program is subject to Intergovernmental Review of Federal Programs as governed by Executive Order (E.O.) 12372. E.O. 12372 sets up a system for State and local government review of proposed Federal assistance applications. The applicant should contact their State Single Point of Contact (SPOC) as early as possible to alert them to the prospective application and receive any necessary instructions on the State process. If the SPOC has any State process recommendations on the application, they should be sent to Henry S. Cassell, III, Grants Management Officer, Grants Management Branch, Procurement and Grants Office, Centers for Disease Control and Prevention (CDC), 255 East Paces Ferry Road, NE., Room 300, Mailstop E–13, Atlanta, GA 30305, no later than 60 days after the application deadline date. The Announcement Number and Program Title should be referenced on the document. The granting agency does not guarantee to ''accommodate or explain'' for State process recommendations it receives after that date.

Public Health System Reporting Requirements

This program is not subject to the Public Health System Reporting Requirements.

Catalog of Federal Domestic Assistance Number

The Catalog of Federal Domestic Assistance Number is 93.136.

Where To Obtain Additional Information

If you are interested in obtaining additional information regarding this project, please refer to Announcement 551 and contact Adrienne Brown, Grants Management Specialist, Grants Management Branch, Procurement and Grants Office, Centers for Disease Control and Prevention (CDC), 255 E. Paces Ferry Road, NE., Mailstop E–13, Atlanta, GA 30305, telephone (404) 842–6634.

A copy of ''Healthy People 2000'' (Full Report; Stock No. 017–001–00474–0) or ''Healthy People 2000'' (Summary Report; Stock No. 017–001–00473–1) referenced in the **SUMMARY** may be obtained through the Superintendent of Documents, Government Printing Office, Washington, DC 20402–9325, telephone (202) 512–1800.

Dated: June 1, 1995.

Joseph R. Carter,

Acting Associate Director for Management and Operations, Centers for Disease Control and Prevention (CDC).

[FR Doc. 95–14045 Filed 6–7–95; 8:45 am]

BILLING CODE 4163–18–P

[CDC 573]

Project Grant to Assess Tuberculosis Control Efforts on College and University Campuses in the United States

Summary

The Centers for Disease Control and Prevention (CDC) announces the availability of fiscal year (FY) 1995 project grant funds for a sole source grant to the American College Health Association (ACHA). Approximately $60,000 is available in FY 1995 to support this project. It is expected the award will begin on or about September 30, 1995, for a 12-month budget and project period. The funding estimate may vary and is subject to change.

The purpose of this grant is to assess: (1) implementation of student prematriculation and staff screening for tuberculosis (TB) infection; (2) attitudes toward and barriers to implementing screening; (3) practices concerning preventive therapy and therapy for TB cases; and (4) the impact of TB control policies on college and university campuses.

The Public Health Service (PHS) is committed to achieving the health promotion and disease prevention objectives of ''Healthy People 2000,'' a PHS-led national activity to reduce morbidity and mortality and improve the quality of life. This announcement is related to the priority areas of HIV Infection and Immunization and Infectious Diseases. (To order a copy of ''Healthy People 2000,'' see the section **WHERE TO OBTAIN ADDITIONAL INFORMATION.**)

Authority

This grant is authorized under Sections 301(a) and 317(a) of the Public Health Service Act (42 U.S.C. 241 and 247b) as amended. Applicable program regulations are found in part 51 (b), subparts A, of Title 42, Code of Federal Regulations.

Smoke-Free Workplace

The PHS strongly encourages all grant recipients to provide a smoke-free workplace and to promote the non-use of all tobacco products, and Public Law 103–227, the Pro-Children Act of 1994, prohibits smoking in certain facilities that receive Federal funds in which education, library, day care, health care, and early childhood development services are provided to children.

Eligible Applicant

Assistance will only be provided to ACHA for this project. No other applications are solicited. The program announcement and application kit have been sent to ACHA.

ACHA is the most appropriate and qualified agency to provide the services specified under this program announcement because: ACHA is a voluntary, nonprofit organization representing over 850 colleges and universities in the United States, Canada, and internationally, as well as more than 2600 individual health professionals. ACHA's operations are national in scope and are implemented via six regions: New York/New England; Mid-Atlantic; South/Southwest; Mid-America; Rocky Mountain and Pacific Coast. ACHA promotes cooperative efforts among schools of higher education, shares knowledge on important college health issues and is a central resource for development of educational materials and programs concerning health policies for colleges and universities. Only ACHA has the

following characteristics that are essential to this study: (1) previous experience executing studies in colleges and the required methodology to do so; (2) the only national focus on the target audience for this study and a unique relationship with colleges which can enhance their interest and willingness to participate; and (3) a unique relationship with and access to college and university health programs that have been identified as the best and most reliable source for the information to be collected. No other multi-university consortium of student health programs exists with these features and such extensive experience in health related issues. Limiting eligibility to ACHA will also ensure the most timely and cost-effective start up and completion of the project. Therefore, ACHA is uniquely qualified, and the only eligible applicant for this study.

Executive Order 12372 Review

This application is not subject to review as governed by Executive Order 12372, Intergovernmental Review of Federal Programs.

Public Health System Reporting Requirements

This program is not subject to the Public Health System Reporting Requirements.

Catalog of Federal Domestic Assistance Number

The Catalog of Federal Domestic Assistance Number is 93.947, TB Demonstration, Research, Public and Professional Education Projects.

Other Requirements

Confidentiality

Applicants must have in place systems to ensure the confidentiality of patient records.

Human Subjects

If the proposed project involves research on human subjects, the applicant must comply with the Department of Health and Human Services' Regulations, 45 CFR part 46, regarding the protection of human subjects. Assurance must be provided to demonstrate that the project will be subject to initial and continuing review by an appropriate institutional review committee. The applicant will be responsible for providing assurance in accordance with the appropriate guidelines and form provided in the application kit.

Where to Obtain Additional Information

If you are interested in obtaining additional information regarding this project, please refer to Announcement 573 and contact Manuel Lambrinos, Grants Management Specialist, Grants Management Branch, Procurement and Grants Office, Centers for Disease Control and Prevention (CDC), 255 East Paces Ferry Road, NE., Room 300, Mailstop E–16, Atlanta, GA 30305, telephone (404) 842–6777.

Applicant may obtain a copy of ''Healthy People 2000'' (Full Report, Stock No. 017–001–00474–0) or ''Healthy People 2000'' (Summary Report, Stock No. 017–001–00473–1) referenced in the **SUMMARY** through the Superintendent of Documents, Government Printing Office, Washington, DC 20402–9325, telephone (202) 512- 1800.

Dated: June 2, 1995.

Joseph R. Carter,

Acting Associate Director for Management and Operations, Centers for Disease Control and Prevention (CDC).

[FR Doc. 95–14042 Filed 6–7–95; 8:45 am]

BILLING CODE 4163–18–P

[CDC–504]

Cooperative Agreement Program With the Black College Satellite Network to Improve Interaction Between Public Health Practice Officials and Minority and Underserved Populations

Summary

The Centers for Disease Control and Prevention (CDC) announces a fiscal year (FY) 1995 cooperative agreement program with the Black College Satellite Network (BCSN) to assist them in developing a program to improve the interaction between public health practitioners and minority and underserved populations. One award for approximately $50,000 will be awarded subject to the availability of FY 1995 funding. It is expected that the award will begin on or about September 29, 1995, and will be made for a 12-month budget period within a project period of up to five years. Funding estimates may vary and are subject to change. Continuation awards within the project period will be made on the basis of satisfactory progress and the availability of funds.

This award will assist the BCSN in the production and distribution of a series of satellite video conferences on the whole range of public health priority issues. This cooperative agreement will permit BCSN to enhance the preparation of public health workers thus improving the interaction between public health practitioners and minority and underserved populations.

The CDC will: (1) provide technical assistance through telephone calls, correspondence, and site visits in the areas of video conference content development, production treatment, selection of faculty, and preparation of faculty; (2) provide technical assistance and consultation for agenda and proposed project activities; (3) assist in the reporting and dissemination of results of video conferences to appropriate Federal, State, and local agencies, academic institutions, and the general public; (4) participate in activities related to acquisition of downlink sites and coordinate sites with BCSN; and (5) coordinate the roles and responsibilities of the state distance learning coordinators.

The Public Health Service is committed to achieving the health promotion and disease prevention objectives of ''Healthy People 2000,'' a PHS-led national activity to reduce morbidity and mortality and improve the quality of life. This announcement is related to all the priority areas of ''Healthy People 2000.'' (For ordering a copy of ''Healthy People 2000,'' see the section ''Where to Obtain Additional Information.'')

Authority

This program is authorized under section 301(a) of the Public Health Service Act, 42 U.S.C. 241(a), and the President's Executive Order 12876 of 1993.

Smoke-Free Workplace

PHS strongly encourages all grant recipients to provide a smoke-free workplace and to promote the non-use of all tobacco products, and Public Law 103–227, the Pro-Children Act of 1994, prohibits smoking in certain facilities that receive Federal funds in which education, library, day care, health care, and early childhood development services are provided to children.

Eligible Applicant

Assistance will be provided only to the Black College Satellite Network (BCSN). No other applications are solicited. The program announcement and application kit have been sent to the BCSN. The BCSN is the only organization with the capacity to perform the activities of this cooperative agreement. BCSN is the only minority organization that provides comprehensive telecommunications services to all Historically Black Colleges and Universities (HBCU's) in

the United States and the Virgin Islands. The Network provides the HBCU's and Predominantly Black colleges and universities with programming, orientation, and satellite technology training sessions for faculty, staff, and students on satellite technology, program development and productions, and the integration of telecommunications into the curriculum. BCSN assists the member institutions: (1) in securing funding for productions to be broadcast to other campuses; and (2) with productions and uplinking of line programs from the colleges and universities.

BCSN provides in-service workshops for the colleges and universities as well as technical assistance in telecommunications to the faculty, administration, and students. There is no other telecommunications group with a comparable record and experience, minority or otherwise. The BCSN Board consists of 18 presidents of the member universities. The Network staff has over 100 years of combined experience and service to HBCU's.

Executive Order 12372 Review

The application is not subject to review as governed by Executive Order 12372, entitled ''Intergovernmental Review of Federal Programs.''

Public Health System Reporting Requirements

This program is not subject to the Public Health System Reporting Requirements.

Catalog of Federal Domestic Assistance Number

The Catalog of Federal Domestic Assistance Number is 93.283.

Where To Obtain Additional Information

If you are interested in obtaining additional information regarding this project, please refer to Announcement 504 and contact Van Malone, Grants Management Specialist, Grants Management Branch, Procurement and Grants Office, Centers for Disease Control and Prevention (CDC), 255 East Paces Ferry Road, NE., Room 320, Mailstop E–15, Atlanta, GA 30305, telephone (404) 842–6872.

A copy of ''Healthy People 2000'' (Full Report, Stock No. 017–001–00474–0) or ''Healthy People 2000'' (Summary Report, Stock No. 017–001–00473–1) referenced in the ''Summary'' may be obtained through the Superintendent of Documents, Government Printing Office, Washington, DC 20402–9325, telephone (202) 512–1800.

Dated: June 2, 1995.

Joseph R. Carter,

Acting Associate Director for Management and Operations, Centers for Disease Control and Prevention (CDC).

[FR Doc. 95–14043 Filed 6–7–95; 8:45 am]

BILLING CODE 4163–18–P

[Announcement 548]

Fellowship Program in Violence Prevention for Minority Medical Students

Introduction

The Centers for Disease Control and Prevention (CDC) announces the availability of fiscal year (FY) 1995 funds for a cooperative agreement for a Fellowship Program in Violence Prevention for Minority Medical Students.

The Public Health Service (PHS) is committed to achieving the health promotion and disease prevention objectives of ''Healthy People 2000,'' a PHS-led national activity to reduce morbidity and mortality and to improve the quality of life. This announcement is related to the priority area of Violent and Abusive Behavior. (For ordering a copy of ''Healthy People 2000,'' see the section ''Where to Obtain Addition Information.'')

Authority

This program announcement is authorized under sections 391(a) and 393(a), of the Public Health Service Act (42 U.S.C. 280b(a), and 280b-2(a)), as amended.

Smoke-Free Workplace

PHS strongly encourages all grant recipients to provide a smoke-free workplace and to promote the non-use of all tobacco products, and Public law 103–227, the Pro-Children Act of 1994, prohibits smoking in certain facilities that receive Federal funds in which education, library, day care, health care, and early childhood development services are provided to children.

Eligible Applicants

Applications may be submitted by public and private, nonprofit and for-profit organizations, and governments and their agencies. Thus, universities, colleges, research institutions, hospitals, other public and private organizations, State and local governments or their bona fide agents, federally recognized Indian tribal governments, Indian tribes or Indian tribal organizations are eligible to apply.

Availability of Funds

Approximately $50,000 is available in FY 1995 to fund one award. It is expected that the award will begin on or about September 30, 1995, and will be made for a 12-month budget period with a project period of 1 year.

Purpose

The purpose of this cooperative agreement is to provide minority medical students with training in violence prevention and epidemiologic research. Specifically, this award is intended to:

A. Develop and strengthen minority physicians leadership in violence prevention;

B. Provide education and research opportunities in violence prevention for minority medical students;

C. Provide a model for future violence prevention training programs at the undergraduate medical school level and;

D. Provide 8–12 week fellowships for four fellows, in rotation, to participate in epidemiologic research on violence and in violence prevention projects.

Program Requirements

Applicants must:

1. Demonstrate a 5-year history of developing and managing fellowship assistance and/or specialized training for minority medical students;

2. Demonstrate that faculty/staff committed to this project have experience supervising medical fellows and medical fellowship programs and;

3. Demonstrate experience in providing and managing fellowship programs which places no fewer than 30 fellows in a one year period, and which has placed no fewer than 250 fellows over the life of the program.

In conducting activities to achieve the purpose of this program, the recipient will be responsible for the activities under A. (Recipient Activities), and CDC will be responsible for the activities listed under B. (CDC Activities).

A. Recipient Activities:

Provide two fellows to participate in an 8–12 week program for each of two periods of performance, one in the fall of 1995, and the other in the winter of 1996, who will:

1. Review existing literature and data on violence prevention efforts and organize the information into text and table for a report;

2. Evaluate violence prevention strategies;

3. Analyze data and prepare written manuscripts for publication;

4. Observe technical assistance to local violence prevention projects; and

5. Make clear, concise presentations of projects completed during the fellowship period.

Fellows should be:

a. Second or third year medical students;

b. Able to organize and analyze data;

c. Interested in pursing a career in public health research, practice, or teaching.

B. CDC Activities:

1. Coordinate and facilitate orientation on CDC Division activities;

2. Provide related background and reading materials;

3. Coordinate site visits to funded projects and;

4. Coordinate and assign project activities.

Review and Evaluation Criteria

Applications will be reviewed and evaluated according to the following criteria (maximum 100 total points):

A. Background and Need (20%)

The extent to which the applicant presents data justifying need for the program in terms of magnitude of the related injury problem and the need for minority medical students' training in violence prevention. The extent to which a description of current and previous related experiences: (a) is inclusive in terms of fellowship activities and success, evaluation capability and coordination activities, and (b) demonstrates capacity to conduct the program.

B. Goals and Objectives (15%)

The extent to which the applicant has included goals which are relevant to the purpose of the proposal and feasible to be accomplished during the project period, and the extent to which these are specific, and measurable. The extent to which the applicant has included objectives which are feasible to be accomplished during the budget period, and which address all activities necessary to accomplish the purpose of the proposal. The extent to which the objectives are specific, time-phased, and measurable.

C. Methods (35%)

The extent to which the applicant provides a detailed description of proposed activities which are likely to achieve each objective and overall program goals and which includes designation of responsibility for each action undertaken. The extent to which the applicant provides a reasonable and complete schedule for implementing all activities. The extent to which roles of each Fellow and CDC are described, and coordination and supervision of Fellows in proposed activities is delineated. The extent to which documentation of program organizational location is clear. The extent to which position descriptions, CV's and lines of command are appropriate to accomplishment of program goals and objectives. The extent to which concurrence with the applicant's plans by all other involved parties is specific and documented.

D. Evaluation (30%)

The extent to which the proposed evaluation system is detailed and will document program process, effectiveness, impact, and outcome. The extent to which the applicant demonstrates potential data sources for evaluation purposes, and documents staff availability, expertise, and capacity to perform the evaluation. The extent to which a feasible plan for reporting evaluation results and using evaluation information for programmatic decisions is included.

E. Budget and Justification (Not Scored)

The extent to which the applicant provides a detailed budget and narrative justification consistent with stated objectives and planned program activities.

Executive Order 12372 Review

This program is not subject to the Executive Order 12372 review.

Public Health System Reporting Requirements

This program is not subject to the Public Health System Reporting Requirements.

Catalog of Federal Domestic Assistance Number

The Catalog of Federal Domestic Assistance Number is 93.136.

Other Requirements

Human Subjects

If the proposed project involves research on human subjects, the applicant must comply with the Department of Health and Human Services Regulations, 45 CFR part 46, regarding the protection of human subjects. Assurance must be provided to demonstrate that the project will be subject to initial and continuing review by an appropriate institutional review committee. The applicant will be responsible for providing assurance in accordance with the appropriate guidelines and form provided in the application kit.

In addition to other applicable committees, Indian Health Service (IHS) institutional review committees also must review the project if any component of IHS will be involved or will support the research. If any American Indian community is involved, its tribal government must also approve that portion of the project applicable to it.

Paperwork Reduction Act

Projects that involve the collection of information from 10 or more individuals and are funded by the cooperative agreement will be subject to review and approval by the Office of Management and Budget (OMB) under the Paperwork Reduction Act.

Application Submission and Deadline

The original and two copies of the application PHS Form 5161–1 (OMB Number 0937-0189) must be submitted to Henry S. Cassell, III, Grants Management Officer, Grants Management Branch, Procurement and Grants Office, Centers for Disease Control and Prevention (CDC), 255 East Paces Ferry Road, NE., Room 300, Mailstop E–13, Atlanta, GA 30305, on or before July 31, 1995.

1. Deadlines: Applications shall be considered as meeting the deadline if they are either:

a. Received on or before the deadline date; or

b. Sent on or before the deadline date and received in time for submission to the objective review group. (Applicants must request a legibly dated U.S. Postal Service postmark or obtain a legibly dated receipt from a commercial carrier or the U.S. Postal Service. Private metered postmarks shall not be acceptable as proof of timely mailing.)

2. Late Applications:

Applications which do not meet the criteria in 1.a. or 1.b. above are considered late. Late applications will not be considered in the current competition and will be returned to the applicant.

Where To Obtain Additional Information

To receive additional written information call (404) 332–4561. You will be asked to leave your name, address and phone number and will need to refer to Announcement 548. You will receive a complete program description, information on application procedures, and application forms.

If you have any questions after reviewing the contents of all the documents, business management technical assistance may be obtained from Adrienne Brown, Grants Management Specialist, Grants Management Branch, Procurement and Grants Office, Centers for Disease

Control and Prevention (CDC), 255 East Paces Ferry Road, NE., Room 300, Mailstop E–13, Atlanta, GA 30305, telephone (404) 842–6630. Programmatic technical assistance may be obtained from Timothy Thornton, National Center for Injury Prevention and Control, Centers for Disease Control and Prevention (CDC), 1600 Clifton Road, NE., Mailstop K–60, Atlanta, GA 30333, telephone (404) 488–4389.

Please refer to Announcement 548 when requesting information and submitting an application.

Potential applicants may obtain a copy of ''Healthy People 2000'' (Full Report, Stock No. 017–001–00474–0) or ''Healthy People 2000'' (Summary Report, Stock No. 017–001–00473–1) referenced in the ''Introduction'' through the Superintendent of Documents, Government Printing Office, Washington, DC 20402–9325, telephone (202) 512–1800.

Dated: June 1, 1995.

Joseph R. Carter,

Acting Associate Director for Management and Operations, Centers for Disease Control and Prevention (CDC).

[FR Doc. 95–14044 Filed 6–7–95; 8:45 am]

BILLING CODE 4163–18–P

Food and Drug Administration

[Docket Nos. 95P–0061, 95S–0117, 95S–0126, and 95S–0135]

Patent Term Extensions Under the Uruguay Round Agreements Act and Their Effects on Marketing Applications for Human and Animal Drug Products

AGENCY: Food and Drug Administration, HHS.

ACTION: Notice of availability.

SUMMARY: The Food and Drug Administration (FDA) is announcing the availability of its response to a citizen petition from Glaxo Pharmaceuticals, Inc. (Glaxo). The petition requested that the agency announce how the Uruguay Round Agreements Act (URAA) will affect the patent information submission and patent certification requirements for applications to market drug products under the Federal Food, Drug, and Cosmetic Act (the act). FDA responded to the petition on May 25, 1995. The response provides applicants with current information on how the URAA will affect patent term extension requirements for applications to market human and animal drugs.

DATES: Amended patent information, reflecting any extended patent terms under the URAA, should be submitted to FDA before July 8, 1995, but no earlier than June 8, 1995.

ADDRESSES: Copies of the citizen petition (95P–0061/CP1), comments submitted to FDA regarding the citizen petition, and FDA's response to the citizen petition may be obtained from the Freedom of Information Staff (HFI–35), Food and Drug Administration, rm. 12A–16, 5600 Fishers Lane, Rockville, MD 20857. Copies are also available for public examination at the Dockets Management Branch (HFA–305), Food and Drug Administration, rm. 1–23, 12420 Parklawn Dr., Rockville, MD 20857, between 9 a.m. and 4 p.m., Monday through Friday.

FOR FURTHER INFORMATION CONTACT: Wayne H. Mitchell, Center for Drug Evaluation and Research (HFD–362), Food and Drug Administration, 7500 Standish Pl., Rockville, MD 20855, 301–594–1049.

SUPPLEMENTARY INFORMATION: On December 8, 1994, the URRA (Pub. L. 103–465) was signed into law. The URAA made amendments to Title 35 of the United States Code. These amendments relate to patent terms for existing and future patents, and they will become effective on June 8, 1995. Certain provisions of the URAA patent amendments will change the terms of some existing patents from 17 years from the date of the granting of the patent to 20 years from the filing of the patent application.

On February 16, 1995, the Patent and Trademark Office (PTO) held a public hearing on the patent provisions amended by the URAA. The PTO devoted a portion of the hearing to addressing several issues pertaining to the effect of these changes in patent law on FDA's enforcement of the act. (See the **Federal Register** notice of January 17, 1995 (60 FR 3398).) Oral testimony was given at the hearing and written submissions were made to PTO and FDA. Glaxo submitted its citizen petition to FDA on March 7, 1995. The petition requested that the agency announce the effect the URAA will have on the patent information submission and patent certification requirements for applicants to market drug products under the act. FDA has received a number of responses to Glaxo's citizen petition from generic and innovator drug manufacturers. Glaxo submitted an additional comment on the responses dated April 13, 1995. These documents are included in Docket No. 95P–0061. These oral and written submissions were considered by FDA in developing its response to the petition.

A brief summary of FDA's position on patent term extensions under the URAA is set out below in this document. A fuller exposition of the agency's position may be found in the response to Glaxo's petition.

I. Submission of Patent Information

FDA has determined that if the patent term expiration date for a listed human or animal drug product is extended by the URAA, the new drug application (NDA) or new animal drug application (NADA) holder must submit information on the new patent term expiration date to FDA after June 8, 1995, but before July 8, 1995. NDA holders who have already submitted information indicating that listed patents will be extended by the URAA should resubmit this information on or after June 8, 1995.

Two copies of amended patent information pertaining to human drug products regulated under section 505 of the act (21 U.S.C. 355) by the Center for Drug Evaluation and Research (CDER) should be submitted to the assigned reviewing division. The submission should bear the pertinent NDA number. Two copies of amended patent information pertaining to human drug products regulated under section 505 of the act by the Center for Biologics Evaluation and Research (CBER) should be sent to the Document Control Center, Center for Biologics Evaluation and Research (HFM–99), Food and Drug Administration, 1401 Rockville Pike, suite 200N, Rockville, MD 20852–1448.

To expedite the availability to the public of the updated patent information, a third copy of the amended patent information pertaining to human drug products regulated under section 505 of the act by either CDER or CBER should be sent to the Drug Information Services Branch, Center for Drug Evaluation and Research, Food and Drug Administration (HFD–84), 5600 Fishers Lane, Rockville, MD 20857.

Amended patent information pertaining to animal drug products should be sent to the Document Control Unit, Center for Veterinary Medicine (HFV–199), Food and Drug Administration, 7500 Standish Pl., Rockville, MD 20855.

II. Public Availability of Updated Patent Information

Updated information related to patents on human drug products regulated by CDER will be placed on public display in the Dockets Management Branch (address above) under Docket No. 95S–0117, after June 8, 1995. Updated information related to patents on human drug products regulated by CBER will be placed on

public display in the Dockets Management Branch under Docket No. 95S–0135. Updated information related to patents on animal drug products will be placed on public display in the Dockets Management Branch under Docket No. 95S–0126. Updated patent information for human drug products will be published in the monthly supplements to ''Approved Drug Products with Therapeutic Equivalence Evaluations'' (the Orange Book) and updated patent information for animal drug products will be published in the monthly supplements to ''FDA Approved Animal Drug Products'' (the Green Book) after June 8, 1995.

III. Amended Patent Certifications

Abbreviated new drug applications (ANDA's), abbreviated new animal drug applications (ANADA's), and applications provided for in section 505(b)(2) of the act (505(b)(2) applications) pending before the agency on June 8, 1995, including such applications that may have received tentative approval letters, must be amended to respond to the URAA-extended patent expiration dates, if information on the new expiration dates is submitted to the agency by the NDA or NADA holder in a timely manner. ANDA's, ANADA's, and 505(b)(2) applications submitted after June 8, 1995, likewise must provide patent certifications with respect to the URAA-extended patent expiration dates. After June 8, 1995, FDA will not approve any application that does not contain a correct certification with respect to a URAA-extended patent expiration date that was submitted in a timely manner to the agency. The agency expects that an applicant that wishes to market a drug under an approved ANDA, ANADA, or 505(b)(2) application before the expiration of a URAA-extended patent, for which information was submitted to FDA in a timely manner, will file a paragraph IV certification with respect to that patent (See sections 505(b)(2)(A), (j)(2)(A)(vii), and 512(n)(1)(H) of the act.)

Amended patent certification statements for abbreviated new drug applications (ANDA's) and 505(b)(2) applications reviewed by the Office of Generic Drugs should be sent to the Office of Generic Drugs, Center for Drug Evaluation and Research (HFD–600), Food and Drug Administration, 7500 Standish Pl., Rockville, MD 20855. Amended patent certification statements for 505(b)(2) applications reviewed by the new drug reviewing divisions within CDER should be sent to the appropriate review division. Amended patent certification statements pertaining to animal drug products should be sent to the Document Control Unit, Center for Veterinary Medicine (HFV–199), Food and Drug Administration, 7500 Standish Pl., Rockville, MD 20855. Amended patent certification statements pertaining to biological products should be sent to the Document Control Center, Center for Biologics Evaluation and Research (HFM–99), Food and Drug Administration, 1401 Rockville Pike, suite 200N, Rockville, MD 20852–1448.

Dated: June 2, 1995.

William B. Schultz,

Deputy Commissioner for Policy.

[FR Doc. 95–14060 Filed 6–5–95; 2:29 pm]

BILLING CODE 4160–01–F

[Docket No. 95M–0119]

Chartex International plc; Premarket Approval of Femidom® Female Condom

AGENCY: Food and Drug Administration, HHS.

ACTION: Notice.

SUMMARY: The Food and Drug Administration (FDA) is announcing its approval of the application submitted by Chartex International plc, London, U.K., for premarket approval, under the Federal Food, Drug, and Cosmetic Act (the act), of the Femidom® Female Condom. The device is to be manufactured under an agreement with Wisconsin Pharmacal Co., Inc., Jackson, WI, which has authorized Chartex International plc to incorporate information contained in its approved premarket approval application for the Reality™ Female Condom (P910064). FDA's Center for Devices and Radiological Health (CDRH) notified the applicant, by letter of April 14, 1995, of the approval of the application.

DATES: Petitions for administrative review by July 10, 1995.

ADDRESSES: Written requests for copies of the summary of safety and effectiveness data and petitions for administrative review to the Dockets Management Branch (HFA–305), Food and Drug Administration, rm. 1–23, 12420 Parklawn Dr., Rockville, MD 20857.

FOR FURTHER INFORMATION CONTACT: Colin M. Pollard, Center for Devices and Radiological Health (HFZ–470), Food and Drug Administration, 9200 Corporate Blvd., Rockville, MD 20850, 301–594–1180.

SUPPLEMENTARY INFORMATION: On September 30, 1994, Chartex International plc, London, U.K., submitted to CDRH an application for premarket approval of the Femidom® Female Condom. The device is an intravaginal barrier device and is indicated for use to help prevent pregnancy and sexually transmitted diseases (STD's), including the human immunodeficiency virus (HIV) infection during vaginal intercourse. The application includes authorization from Wisconsin Pharmacal Co., Inc., Jackson, WI, 53037, to incorporate information contained in its approved premarket approval application for the Reality™ Female Condom (P910064). In accordance with the provisions of section 515(c)(2) of the act as amended by the Safe Medical Devices Act of 1990, this PMA was not referred to the Obstetrics and Gynecology Devices Panel, an FDA advisory panel, for review and recommendation because the information in the PMA substantially duplicates information previously reviewed by this panel.

On April 14, 1995, CDRH approved the application by a letter to the applicant from the Director of the Office of Device Evaluation, CDRH.

A summary of the safety and effectiveness data on which CDRH based its approval is on file in the Dockets Management Branch (address above) and is available from that office upon written request. Requests should be identified with the name of the device and the docket number found in brackets in the heading of this document.

Opportunity for Administrative Review

Section 515(d)(3) of the act (21 U.S.C. 360e(d)(3)) authorizes any interested person to petition, under section 515(g) of the act, for administrative review of CDRH's decision to approve this application. A petitioner may request either a formal hearing under part 12 (21 CFR part 12) of FDA's administrative practices and procedures regulations or a review of the application and CDRH's action by an independent advisory committee of experts. A petition is to be in the form of a petition for reconsideration under § 10.33(b) (21 CFR 10.33(b)). A petitioner shall identify the form of review requested (hearing or independent advisory committee) and shall submit with the petition supporting data and information showing that there is a genuine and substantial issue of material fact for resolution through administrative review. After reviewing the petition, FDA will decide whether to grant or deny the petition and will publish a notice of its decision in the **Federal Register**. If FDA grants the petition, the notice will state the issue to be reviewed, the form of review to be

used, the persons who may participate in the review, the time and place where the review will occur, and other details.

Petitioners may, at any time on or before July 10, 1995, file with the Dockets Management Branch (address above) two copies of each petition and supporting data and information, identified with the name of the device and the docket number found in brackets in the heading of this document. Received petitions may be seen in the office above between 9 a.m. and 4 p.m., Monday through Friday.

This notice is issued under the Federal Food, Drug, and Cosmetic Act (secs. 515(d), 520(h) (21 U.S.C. 360e(d), 360j(h))) and under authority delegated to the Commissioner of Food and Drugs (21 CFR 5.10) and redelegated to the Director, Center for Devices and Radiological Health (21 CFR 5.53).

Dated: May 26, 1995.

Joseph A. Levitt,

Deputy Director for Regulations Policy, Center for Devices and Radiological Health.

[FR Doc. 95–14059 Filed 6–7–95; 8:45 am]

BILLING CODE 4160–01–F

Substance Abuse and Mental Health Services Administration (SAMHSA)

Competitive Supplements for Integrated Children and Family Services

AGENCY: Substance Abuse and Mental Health Services Administration (SAMHSA), HHS.

ACTION: Notice of availability of supplemental funds for certain programs of the Center for Mental Health Services (CMHS), Center for Substance Abuse Prevention (CSAP) and Center for Substance Abuse Treatment (CSAT).

SUMMARY: This notice informs the public that SAMHSA is making available approximately $2–3 million in Fiscal Year 1995 for up to 10 supplemental awards to existing grantees who have a minimum of 3 years of Federal grant support remaining as of September 1995, as reflected on the current Notice of Grant Award. Funds are being provided to support 3 year supplemental projects designed to implement and evaluate the effectiveness of integrated service delivery approaches for families with children from birth to 7 years of age, who are affected by alcohol, drug abuse and/or mental health disorders or who are at risk for such disorders.

Eligibility is limited to grantees with 3 years remaining in the following SAMHSA programs in order to be able to evaluate the effects of funding such integrated approaches in a known, well-defined project where the various strengths and other grantee characteristics have already been generally identified. Thus, most of the variables affecting performance are known so that the direct effects of the supplemental funding can be better measured than would be possible in an untested environment. This control in supplementing a variety of different programs allows the maximum insight to be obtained with the limited resources available. The grantees will need to have 3 years remaining since we do not anticipate having measurable results to evaluate in a shorter period.

Eligible program	CFDA No.	Statutory authority PHS Act
CMHS:		
Cooperative Agreements for ACCESS—Demonstration Projects for Homeless Persons with Severe Mental Illness.	93.125	520A
Grants for Comprehensive Community Mental Health Services for Children and Adolescents with Serious Emotional Disturbances.	93.104	561, Pt. E, Title V
CSAP:		
The Community Prevention Coalitions Demonstration Grant Program	93.194	501(d)(5); 516
Substance Abuse Prevention Demonstration Grants for High Risk Youth Populations (excluding Module D-Replications).	93.144	517
CSAT:		
Services Grant Program for Residential Treatment for Pregnant and Postpartum Women	93.101	508
Demonstration Grant Program for Residential Treatment for Women and Their Children	93.102	510
Cooperative Agreements for Substance Abuse Treatment and Recovery Systems for Rural, Remote and Culturally Distinct Populations.	93.122	510(b)(1)

The receipt date for applications is July 25, 1995. The application review and award process will be handled in an expedited manner. Applications will be evaluated for technical merit by a panel of expert non-Federal and Federal reviewers. Awards will be made on the basis of the award criteria set forth in the supplemental guidelines subject to the availability of funds. Awards will be made no later than September 30, 1995.

FOR FURTHER INFORMATION CONTACT: Questions concerning program issues should be directed to SAMHSA Project Officers for the existing SAMHSA grants. Questions concerning grants management issues should be directed to SAMHSA Grants Management Specialists for the existing SAMHSA grants.

Dated: June 2, 1995.

Richard Kopanda,

Acting Executive Officer, SAMHSA.

[FR Doc. 95–13985 Filed 6–7–95; 8:45 am]

BILLING CODE 4162–20–P

DEPARTMENT OF HOUSING AND URBAN DEVELOPMENT

Office of the Assistant Secretary for Housing—Federal Housing Commissioner

[Docket No. N–95–3909; FR–3904–C–02]

Notice of Fund Availability (NOFA) for Supportive Housing for the Elderly; Correction

AGENCY: Office of the Assistant Secretary for Housing—Federal Housing Commissioner, HUD.

ACTION: Notice of fund availability for Fiscal Year (FY) 1995; Correction.

SUMMARY: This notice corrects the NOFA for Supportive Housing for the Elderly, published in the **Federal**

Register on May 24, 1995 (60 FR 27612). A sentence in the NOFA mistakenly describes the maximum total number of points an application can earn. This notice corrects the sentence to provide that an application can earn a maximum total of 110 points, including bonus points.

FOR FURTHER INFORMATION CONTACT:

Margaret Milner, Acting Director, Office of Elderly and Assisted Housing, Department of Housing and Urban Development, 451 Seventh Street, SW., Room 6130, Washington, DC 20410; telephone number (202) 708–4542 (voice); (202) 708–4594 (TDD). (These numbers are not toll-free).

SUPPLEMENTARY INFORMATION: The Fiscal Year (FY) 1995 Notice of Funding Availability (NOFA) for Supportive Housing for the Elderly was published in the **Federal Register** on May 24, 1995 (60 FR 27612). At the end of the ''Selection Criteria'' section of the NOFA (60 FR 27615), HUD included a sentence intended to clarify that section by providing the maximum total number of points. However, in this final sentence, HUD mistakenly described the total number of bonus points available. This notice establishes that, according to the selection criteria as described in the NOFA, an application can earn an additional 10 bonus points for a maximum total of 110 points.

Accordingly, FR Doc. 95–12716, the FY 1995 NOFA for Supportive Housing for the Elderly, published in the **Federal Register** on May 24, 1995 (60 FR 27612), is corrected as follows:

1. On page 27615, column 3, in section I.D.3., under the heading ''Selection Criteria,'' paragraph (d) is corrected to read as follows:

I. Purpose and Substantive Description

* * * * *

D. Initial Screening, Technical Processing, and Selection Criteria

* * * * *

3. Selection Criteria

* * * * *

(d) The project will be located within the boundaries of a Federally-designated Empowerment Zone, Urban Supplemental Empowerment Zone, Enterprise Community, or Urban Enhanced Enterprise Community (5 bonus points).

The maximum number of points an application can earn without bonus points is 100. An application can earn an additional 10 bonus points for a maximum total of 110 points.

Dated: June 1, 1995.

Camille Acevedo,

Assistant General Counsel for Regulations.

[FR Doc. 95–14080 Filed 6–7–95; 8:45 am]

BILLING CODE 4210–27–M

Office of the Assistant Secretary for Public and Indian Housing

[Docket No. N–95–3714; FR–3832–N–02]

NOFA for Public and Indian Housing Family Investment Centers: Amendment

AGENCY: Office of the Assistant Secretary for Public and Indian Housing, HUD.

ACTION: Amendment of NOFA.

SUMMARY: This Notice amends a NOFA that was published in the **Federal Register** on February 15, 1995, to announce a set-aside to two Housing Agencies not funded under the FY 1994 NOFA for this program only because of a technical, computational error.

FOR FURTHER INFORMATION CONTACT: Marcia Y. Martin, Office of Community Relations and Involvement (OCRI), Room 4106, or Charles V. Bell, Office of Native American Programs (ONAP), Room P8204, Department of Housing and Urban Development, 451 Seventh Street, S.W., Washington, DC 20410; telephone Numbers: OCRI (202) 708–4214; and ONAP (202) 755–0088 (these are not toll-free numbers). Hearing- or speech-impaired persons may use the Telecommunications Devises for the Deaf (TDD) by contacting the Federal Information Relay Services on 1–800–877–TDDY (1–800–877–8339) or 202–708–9300 (not a toll-free number) for information on the program.

SUPPLEMENTARY INFORMATION: Accordingly, FR Doc. 95–3731, the NOFA for Public and Indian Housing Family Investment Centers, published at 670 FR 8900 (February 15, 1995), is amended as follows:

1. On page 8900, beginning in the second column, the second paragraph under the heading ''B. Allocation Amounts'' in Section I, Purpose and Substantive Description, of the NOFA is revised to read as follows:

Of the up to $60 million total current funds, $1,709,500 has been set-aside to two housing authorities not funded in the FY 1994 funding cycle because of a technical, computational error, and up to $42,820,129 is being made available under this NOFA. In accordance with the FY 1994 NOFA, the Housing Authority of Milwaukee, Wisconsin will receive $1,000,000 and the Kodiak Island Housing Authority, Alaska will receive $709,500 to conduct renovation/supportive services activities. In addition, the Department intends to use $10 million of the current funds for a Youth Development Initiative for the purposes of curbing crime among youth, and for youth leadership and development programs that will provide young individuals in public housing with better access to comprehensive education, employment opportunities, and supportive services to achieve self-sufficiency. (Indian Housing Authorities (IHAs) are not eligible for the Youth Development Initiative; however, additional IHAs may be funded through the regular FIC allocation under this NOFA.) In FY 1994, the Department awarded $5 million of FIC funds under this Initiative. A separate NOFA announcing these funds will be published in the **Federal Register**.

* * * * *

Dated: June 1, 1995.

Joseph Shuldiner,

Assistant Secretary for Public and Indian Housing.

[FR Doc. 95–14081 Filed 6–7–95; 8:45 am]

BILLING CODE 4210–33–M

Office of the Assistant Secretary for Community Planning and Development

[Docket No. D–95–1060; FR–3674–D–02]

Amendment to Field Reorganization; Redelegation of Authority

AGENCY: Office of the Assistant Secretary for Community Planning and Development, HUD.

ACTION: Notice of Amendment to Redelegation of Authority.

SUMMARY: This notice amends the Revocation and Redelegation of Authority (59 FR 18280), published April 15, 1994. In that redelegation, the Department implemented the field reorganization for the Office of Community Planning and Development. This amendment expands the authority redelegated to the field regarding the HOPE and the HOME programs. In addition, it adds Technical Assistance Awards and General Administrative Functions to the list of program and administrative areas redelegated to the field. The April 15, 1994 Revocation and Redelegation of Authority (59 FR 18280) remains in effect, as amended by this notice.

EFFECTIVE DATE: June 2, 1995.

FOR FURTHER INFORMATION CONTACT: Richard R. Burk, Office of Community Planning and Development, Department of Housing and Urban Development,

451 7th St., S.W., Room 7152, Washington, D.C. 20410, 202–708–5484. A telecommunications device for the hearing-impaired is available at 202–708–2565. (These are not toll-free numbers.)

SUPPLEMENTARY INFORMATION: In November of 1993, the Secretary announced the reorganization of HUD's field structure to improve HUD's performance and provide HUD's customers—members of the public and program beneficiaries—more efficient service and less bureaucracy by empowering HUD's employees to more effectively serve these customers. On April 15, 1994, the Department published a notice revoking and redelegating program authority to meet the objectives of the reorganization for the Office of Community Planning and Development. The notice redelegated to Directors and Deputy Directors of Community Planning and Development in HUD field offices all powers and authorities necessary to carry out specified Office of Community Planning and Development program functions within their jurisdictions.

This document amends the April 15th redelegation. In this document, the HUD officials in the field are redelegated authority to carry out additional functions pursuant to the HOPE and the HOME programs. These officials are also redelegated authority regarding technical assistance awards under various programs and general management functions.

Accordingly, the Assistant Secretary for Community Planning and Development amends the redelegation of authority at 59 FR 18280 (April 15, 1994) and redelegates authority to Directors and Deputy Directors of CPD in HUD field offices as follows:

Section A. Authority Redelegated

At Section B, paragraph 2, of 59 FR 18280 (April 15, 1994), under the heading entitled ''2. The Home Program: HOME Investment Partnerships, other than the Indian Tribe Component (Title II, National Affordable Housing Act of 1990 (NAHA), 42 U.S.C. 12721)'', the list of duties redelegated is amended to read as follows:

—Approve deadline extensions unless required by statute or regulation.
—Approve HOME program descriptions.
—Execute SF 40093 HOME Improvement Partnership Agreements.
—Designate new HOME participating jurisdictions.
—Conduct environmental reviews and releases (and determine whether an applicant has the capacity to carry out environmental reviews).
—Revoke a jurisdiction's designation as a participating jurisdiction pursuant to Section 216 of NAHA.
—Effect remedies for noncompliance pursuant to Section 223 of NAHA.

The list of duties not redelegated is amended to read as follows:

—Determine allocation and reallocation amounts pursuant to Section 217 of NAHA.

At Section B, paragraph 3, of 59 FR 18280, dated April 15, 1994, under the heading entitled ''3. HOPE for Homeownership of Single Family Homes (Title IV, Subtitle C, National Affordable Housing Act of 1990, 42 U.S.C. 12891 (HOPE 3)'', the list of duties redelegated is amended to read as follows:

—Sign all grant approval documents, including approval letters and grant agreements.
—Approve deadline extensions unless deadline required by statute or regulation.
—Monitor and close out projects.
—Sign IPA audit correspondence.
—Sign Inspector General audit correspondence.
—Sign congressional correspondence.
—Authority to extend a grantee's close-out date up to 12 months pursuant to 24 CFR 572.210(f).

At Section B of 59 FR 18280 (dated April 15, 1994), after paragraph 12, two new paragraphs are added to the list of program areas and responsibilities under which authority is redelegated to Directors and Deputy Directors of Community Planning and Development in HUD field offices, and the redelegation at 59 FR 18280 is amended to read as follows:

13. Technical Assistance Awards (Section 107 of the Housing and Community Development Act of 1974, 42 U.S.C. 5307; Sections 233 and 242 of the Cranston-Gonzalez National Affordable Housing Act, 42 U.S.C. 12773 and 12782; and Section 423 of the Stuart B. McKinney Homeless Assistance Act, 42 U.S.C. 11383);

—Sign Grant Agreements, SF 718 Funds Reservation, grant award letters, grant amendments, closeout agreements, IPA audit correspondence, and all correspondence to grantees.
—Conduct environmental reviews and releases.
—Approve deadline extensions.
—Amend approved budgets.
—Waive Handbook and Notice provisions not required by statute or regulation.

14. General Management and Administrative Responsibilities Common to All CPD Programs:

In addition to redelegating powers and authorities which are specific to the running of particular CPD programs, this document redelegates the following powers and authorities common to the general management and operation of all CDP programs:

—Sign CPD correspondence, grantee correspondence, and all other public (non-Congressional) inquiries. (Requests for information under the Freedom of Information Act are excluded from this redelegation.)
—Approve performance awards for bargaining unit employees in accordance with Departmental guidelines.
—Approve selections for merit staffed positions in grades GS–12 and below.
—Approve compensatory time and advanced leave for bargaining unit employees.
—Restore ''use or lose'' leave for bargaining unit employees.
—Approve non-remunerative awards for all employees.

Authority: Sec. 7(d) of the Department of HUD Act (42 U.S.C. 3535(d)).

Dated: June 2, 1995.

Andrew M. Cuomo,

Assistant Secretary for Community Planning and Development.

[FR Doc. 95–14082 Filed 6–7–95; 8:45 am]

BILLING CODE 4210–29–M

DEPARTMENT OF THE INTERIOR

Fish and Wildlife Service

Receipt of Application(s) for Permit

The following Applicant(s) have applied for a permit to conduct certain activities with endangered species. This notice is provided pursuant to Section 10(c) of the Endangered Species Act of 1973, as amended (16 U.S.C. 1531, *et seq.*).

PRT–802956

Applicant: Mr. John O. Mills, White Sands Missile Range, New Mexico

The Applicant requests a permit to take the northern aplomado falcon (*Falco femoralis septentrionalis*) on White Sands Missile Range, New Mexico, for the purpose of scientific research, recovery actions, and survival of the species as prescribed by Service recovery documents.

PRT–803203

Applicant: Mr. Howard C. Higgins, TRC Mariah Associates, Inc., Albuquerque, New Mexico.

The Applicant requests a permit to take the southwestern willow flycatcher (*Empidomax traillii extimus*), for the purpose of scientific research, recovery actions, and survival of the species as prescribed by Service recovery documents.

Address: Written data or comments should be submitted to the Assistant Regional Director, Ecological Services, U.S. Fish and Wildlife Service, P.O. Box 1306, Albuquerque, New Mexico 87103, and must be received by the Assistant Regional Director within 30 days for the date of this publication.

Documents and other information submitted with this application are available for review, subject to the requirements of the Privacy Act and Freedom of Information Act, by any party who submits a written request for a copy of such documents to the above office within 30 days of the date of publication of this notice. (See **ADDRESS** above.)

James A. Young,

Acting Regional Director, Region 2, Albuquerque, New Mexico.

[FR Doc. 95–14048 Filed 6–7–95; 8:45 am]

BILLING CODE 4310–55–M

Endangered and Threatened Species Permit Applications

AGENCY: Fish and Wildlife, Interior.

ACTION: Notice of receipt of applications.

The following applicants have applied for a permit to conduct certain activities with endangered species. This notice is provided pursuant to section 10(c) of the Endangered Species Act of 1973, as amended (16 U.S.C. 1531, *et seq.).*

Permit No. PRT–799075

Applicant: Samuel S. Sweet, Santa Barbara, California

The applicant requests a permit to take (capture, handle, PIT tag, radio tag, relocate, and release) the arroyo southwestern toad (*Bufo microscaphus californicus*) throughout the species' range in southern California for scientific research for the purpose of enhancing the survival of the species. These activities were previously authorized under the Regional Director's permit no. PRT–702361.

Permit No. 802456

Applicant: A.G. Crook Company, Beaverton, Oregon

The applicant requests a permit to take (capture and release) the shortnose sucker (*Chasmistes brevirostris*) and the Lost River Sucker (*Deltistes luxatus*) for presence/absence surveys in the upper Klamath Lake area, Klamath Falls, Oregon, for the purpose of enhancing the survival of the species.

Permit No. 802453

Applicant: Mary Price, Riverside, California

The applicant requests a permit to take (capture, weigh, mark, collect hair follicle samples, and release) the Stephens' kangaroo rat (*Dipodomys stephensi*) and the Pacific pocket mouse (*Perognathus longimembris pacificus*) in San Diego, Orange, and Riverside Counties, California, for presence/absence surveys for the purpose of enhancing the survival of the species. Activities for the kangaroo rat were previously authorized under the Regional Director's permit No. PRT–702361.

Permit No. 802450

Applicant: Arthur Davenport, Murrieta, California

The applicant requests a permit to take (capture and release) the arroyo southwestern toad (*Bufo microscaphus californicus*), the Pacific pocket mouse (*Perognathus longimembris pacificus*), and the desert pupfish (*Cyprinodon macularius*), and to take (capture, mark, and release) the Stephens' kangaroo rat (*Dipodomys stephensi*), and to take (survey using taped vocalizations and monitor nests) the least Bell's vireo (*Vireo bellii pusillus*), and southwestern willow flycatcher (*Epidonax traillii extimus*), and to take (survey using taped vocalizations) the Yuma clapper rail (*Rallus longirostris yumanensis*), and to take (capture, collect, sacrifice, and release) the Riverside fairy shrimp (*Streptocephalus wootoni*) in San Bernardino, Los Angeles, Riverside, Orange, San Diego, and Imperial Counties, California, for various ecological studies and presence/absence surveys for the purpose of enhancing the survival of the species.

Permit No. 802449

Applicant: Joan Callahan, Hemet, California

The applicant requests a permit to take (capture, measure, and release) the arroyo southwestern toad (*Bufo microscaphus californicus*) throughout the species' range in southern California for presence/absence surveys for the purpose of enhancing the survival of the species.

Permit No. 802466

Applicant: Louis Courtois, Ventura, California

The applicant requests a permit to take (capture and release) the unarmored threespine stickleback (*Gasterosteus accolades williamson*), the tidewater goby (*Eucyclogobius newberryi*), the arroyo southwestern toad (*Bufo microscaphus californicus*), the Riverside fairy shrimp (*Streptocephalus wootoni*), the conservancy fairy shrimp (*Branchinecta conservatio*), the longhorn fairy shrimp (*Branchinecta longiantenna*), and the vernal pool tadpole shrimp (*Lepidurus packardi*) throughout the species' range in southern California for presence/absence surveys for the purpose of enhancing the survival of the species.

Permit No. 802445

Applicant: Elaine Harding-Smith, Scotts Valley, California

The applicant requests a permit to take (capture and release) the salt marsh harvest mouse (*Reithrodontomys raviventris*) in the San Francisco Bay National Wildlife Refuge and the City of Palo Alto Marshes in Alameda, Santa Clara, and San Mateo Counties, California for population studies for the purpose of enhancing the survival of the species.

DATES: Written comments on the permit applications must be received within 30 days of the date of publication.

ADDRESSES: Written data or comments should be submitted to the Chief, Division of Consultation and Conservation Planning, Ecological Services, U.S. Fish and Wildlife Service, 911 N.E. 11th Avenue, Portland, Oregon 97232–4181. Please refer to the respective permit number for each application when submitting comments.

FOR FURTHER INFORMATION CONTACT: Documents and other information submitted with these applications are available for review, subject to the requirements of the Privacy Act and Freedom of Information Act, by any party who submits a written request for a copy of such documents, within 30 days of the date of publication of this notice, to the following office: U.S. Fish and Wildlife Service, Ecological Services, Division of Consultation and Conservation Planning, 911 N.E. 11th Avenue, Portland, Oregon 97232–4181. Telephone: 503–231–2063; FAX: 503–231–6243. Please refer to the respective permit number for each application when requesting copies of documents.

Dated: June 1, 1995.

Thomas Dwyer,

Deputy Regional Director, Region 1, Portland, Oregon.

[FR Doc. 95–14049 Filed 6–7–95; 8:45 am]

BILLING CODE 4310–55–P

Finding of No Significant Impact for Incidental Take Permit for the Construction of a Single Family Residence Travis County, TX

AGENCY: Fish and Wildlife Service, Interior.

ACTION: Notice.

SUMMARY: The U.S. Fish and Wildlife Service (Service) has prepared an Environmental Assessment for issuance of a Section 10(a)(1)(B) permit for the incidental take of the Federally endangered golden-cheeked warbler (*Dendroica chrysoparia*) during the construction and operation of a single-family residence in Travis County, Texas.

Proposed Action

The proposed action is the issuance of a permit under Section 10(a)(1)(B) of the Endangered Species Act to authorize the incidental take of the golden-cheeked warbler.

The Applicant (Richard S. Baggett) plans to construct a single-family residence at the specific site indicated as Lot 2, Block L, Long Canyon, Phase IIB, aka 9611 Bell Mountain Drive, Austin, Travis County, Texas, (PRT–800131).

The proposed construction and operation of the single-family residence will comply with all local, State, and Federal environmental regulations addressing environmental impacts associated with this type of development. Details of the mitigation are provided in the Environmental Assessment/Habitat Conservation Plan. The conservation plan actions ensure that the criteria established for issuance of an incidental take permit will be fully satisfied.

Alternatives Considered

1. Proposed action,
2. Alternate site locations,
3. Alternative site designs,
4. Wait for issuance of a regional Section 10(a)(1)(B) permit,
5. No action.

Determination

Based upon information contained in the Environmental Assessment/Habitat Conservation Plan, the Service has determined that this action is not a major Federal action which would significantly affect the quality of the human environment with the meaning of Section 102(2)(c) of the National Environmental Policy Act of 1969. Accordingly, the preparation of an Environmental Impact Statement on the proposed action is not warranted.

It is my decision to issue the Section 10(a)(1)(B) permit for the construction and operation of the single-family residence at the site specified above in Travis County, Texas.

Lynn B. Starnes,

Acting Regional Director, Region 2, Albuquerque, New Mexico.

[FR Doc. 95–14047 Filed 6–7–95; 8:45 am]

BILLING CODE 4310–55–M

Bureau of Reclamation

Tongue River Basin Project

AGENCY: Bureau of Reclamation, Interior.

ACTION: Notice of availability and notice of public hearings on draft environmental impact statement INT–DES–95–26.

SUMMARY: Pursuant to the National Environmental Polcy Act of 1969, as amended, the Department of the Interior, Bureau of Reclamation (Reclamation), in conjunction with the Northern Cheyenne Tribe (NCT) and the Montana Department of Natural Resources and Conservation (DNRC), has prepared a draft environmental impact statement (DEIS) on the proposed Tongue River Basin Project. The DEIS describes and presents the environmental effects of three alternatives, including no action, for a dam repair and enlargement project that would provide additional water to the NCT in partial fulfillment of the Northern Cheyenne Indian Reserved Water Rights Settlement Act of 1992 and enhance fish and wildlife habitat in the Tongue River Basin. Public hearings will be held to receive comments from interested organizations and individuals on the environmental impacts of the proposal.

DATES: A public review period commences with the publication of this notice and ends August 4, 1995. The public hearings are scheduled as follows:

Date	Time	City and state
July 17, 1995.	12:30 p.m.	Busby, MT.
July 17, 1995.	5:30 p.m. ..	Lame Deer, MT.
July 18, 1995.	12:30 p.m.	NCT Reservation.
July 18, 1995.	5:30 p.m. ..	Ashland, MT.
July 19, 1995.	12:30 p.m.	Birney Village, MT.
July 19, 1995.	5:30 p.m. ..	Sheridan, WY
July 20, 1995.	5:30 p.m. ..	Miles City, MT.
July 21, 1995.	5:30 p.m. ..	Billings, MT.

ADDRESSES: Addresses for public hearings are as follows:

- Busby, MT, Busby School Auditorium.
- Lame Deer, MT, Dull Knife Auditorium.
- NCT Reservation, Muddy Community Center.
- Ashland, MT, St. Labre Mission Auditorium.
- Birney Village, MT, Catholic Church.
- Sheridan, WY, Holiday Inn Conference Room.
- Miles City, MT, Miles City Community College.
- Billings, MT, Fireside Inn Conference Room.

Requests for copies of the DEIS should be addressed to:

- Area Manager, Bureau of Reclamation, Attention: MT–422, P.O. Box 30137, Billings, MT 59107–0137; telephone: (406) 247–2312.
- Director, Northern Cheyenne Natural Resources Department, P.O. Box 128, Lame Deer, MT 59043: telephone: (406) 477–6503.
- Director, Montana Department of Natural Resources and Conservation, 1520 East Sixth Avenue, Helena, MT 59620–2301: telephone: (406) 444–6701.

Copies of the DEIS will be available for inspection at the above addresses and libraries in the project vicinity.

FOR FURTHER INFORMATION CONTACT: Mark Albers, Tongue River Basin Project Coordinator, Montana Area Office; telephone (406) 247–7312.

SUPPLEMENTARY INFORMATION: The Tongue River Basin Project, which includes the repair and enlargement of the Tongue River Dam and the partial fulfillment of the Northern Cheyenne Indian Reserved Water Rights Settlement Act of 1992 (Pub. L. 102–374, 106 Stat. 1186) (Settlement Act), is being undertaken to alleviate dam safety concerns and protect downstream lives and property, to protect all existing water use contracts held in the Tongue River Reservoir, and to provide up to an additional 20,000 acre-feet of water to the Northern Cheyenne Tribe. An additional requirement of the project is to enhance fish and wildlife habitat throughout the Tongue River Basin. All project goals are components of the Settlement Act, which ratified the Water Rights Compact entered into on June 11, 1991, by the Northern Cheyenne Tribe and the State of Montana.

Three alternatives, including no action, are considered in the draft statement. The two action alternatives are: (1) Labyrinth Weir Spillway Design, and (2) Roller Compacted Concrete (RCC) Spillway Design. Both action

alternatives would rehabilitate the inadequate Tongue River Dam spillway and raise its crest elevation 4 feet. The resultant increased in Tongue River Reservoir capacity would provide additional water to the NCT and thus partially fulfill the provisions of the Settlement Act. A fundamental component of both action alternatives provides for the enhancement of fish and wildlife habitat in the Tongue River Basin. In addition to the two action plans and the No Action Plan, the DEIS also evaluates in less detail several nonviable alternatives.

The principle environmental consequences that would result from the two action plans include:

- Hydrology. Increased reservoir capacity and contents following construction; short-term reductions in downstream flows during construction; increased upstream ice formation due to increased reservoir contents; short-term reductions in downstream water quality during construction; increased peak outflow from the spillway following construction (Alternative 1 only).
- Aquatics/Fisheries. Short-term drawdown and reduced reservoir capacity during construction; increased reservoir capacity and contents following construction; more stable downstream releases following construction.
- Vegetation. Inundation of approximately 400 acres of vegetation due to increased reservoir capacity and contents following construction; short-term disturbances and reduced productivity to vegetation due to staging area activities, county road realignment, and aggregate mining activities.
- Biodiversity. Potential short-term reductions in biodiversity during construction; increased biodiversity following completion of fish and wildlife habitat enhancement component of project.
- Economic Environment. Increased employment due to project construction; cost to public sector for project construction and operation.
- Transportation. Short-term impacts to local roads from project construction; potential short-term impacts to streets in Sheridan, WY during construction (only if the Sheridan rail load-out facility is used to transport construction-related materials).
- Recreation. Short-term reductions in Tongue River State Park access during construction; short-term reductions in project area recreational experience during construction; short-term increases in exposure to navigational hazards in the reservoir due to construction-related drawdowns; short-term limitations in access to boating facilities due to construction-related drawdowns; short-term limitations in access to boating facilities due to construction-related drawdowns.
- Appearance. Permanent alterations in dam and spillway appearance following construction (Alternative 1 would differ in appearance from the existing spillway due to its labyrinth (zigzag) crest, and Alternative 2 would have a different dam embankment profile as compared to the existing embankment due to the RCC secondary and emergency spillways).
- Project Cost. Alternative 1 is estimated to have a cost 50 percent greater than Alternative 2.

Hearing Process Information: Organizations and individuals wishing to present statements at the hearings should contact the Bureau of Reclamation, Great Plains Region, at the above address. Requests for scheduled presentations will be accepted through 4 p.m. on June 30, 1995.

Oral comments at the hearings will be limited to 10 minutes. The hearing officer may allow any speaker to provide additional oral comments after all persons wishing to comment have been heard. Whenever possible, speakers will be scheduled according to the time preference mentioned in their letter or telephone requests. Speakers not present when called will lose their privilege in the scheduled order and will be recalled at the end of the scheduled speakers.

Written comments from those unable to attend or those wishing to supplement their oral presentations at the hearing should be received by Reclamation's Montana Area Office at the address above by August 4, 1995, for inclusion in the hearing record.

Dated: May 30, 1995.

Katherine Jabs,

Area Manager.

[FR Doc. 95–13986 Filed 6–7–95; 8:45 am]

BILLING CODE 4310–94–M

Bay-Delta Advisory Council Meeting

AGENCY: Bureau of Reclamation, Interior.

ACTION: Notice of meeting.

SUMMARY: The Bay-Delta Advisory Council (BDAC) will meet to discuss several issues including: Council by-laws and procedural matters; overview of the CALFED Bay-Delta Program; function and objectives of BDAC; and orther items. The meeting is open to the public. Interested persons may make oral statements to the BDAC or may file written statements for consideration.

DATES: The Bay-Delta Advisory Council will meet from 10:00 am to 4:00 pm on Thursday, June 29, 1995.

ADDRESSES: The Bay-Delta Advisory Council will meet at the Beverly Garland Hotel, 1780 Tribute Road (at Exposition Boulevard/West), Sacramento, CA.

CONTACT PERSON FOR MORE INFORMATION: Sharon Gross, CALFED Bay-Delta Program, at (916) 657–2666.

SUPPLEMENTARY INFORMATION: The San Francisco Bay/Sacramento-San Joaquin Delta Estuary is a critically important part of California's natural environment and economy. In recognition of the serious problems facing the region and the complex resource management decisions that must be made, the State of California and the Federal Government are working together to stabilize, protect, restore, and enhance the Bay-Delta Estuary. The State and Federal agencies with management and regulatory responsibilities in the Bay-Delta Estuary are working together as CALFED to provide policy direction and oversight for the process.

One area of Bay-Delta management includes the establishment of a joint State-Federal process to develop long-term solutions to problems in the Bay-Delta Estuary related to fish and wildlife, water supply reliability, natural disasters, and water quality. The intent is to develop a comprehensive and balanced plan which addresses all of the resource problems. This effort will be carried out under the policy direction of CALFED. A group of citizen advisors representing California's agricultural, environmental, urban, business, fishing, and other interests who have a stake in finding long-term solutions for the problems affecting the Bay-Delta Estuary has been chartered under the Federal Advisory Committee Act (FACA) as the Bay-Delta Advisory Council (BDAC) to advise CALFED on the program mission, problems to be addressed, and objectives for the CALFED Bay-Delta Program. BDAC will provide a forum to help ensure public participation, and will review reports and other materials prepared by CALFED staff. Minutes of the meeting will be maintained by the CALFED Bay-Delta Program, Suite 1155, 1416 Ninth Street, Sacramento, CA 95814, and will be available for public inspection during regular business hours, Monday through Friday, within 30 days following the meeting.

Dated: June 1, 1995.

Roger Patterson,

Regional Director, Mid-Pacific Region.

[FR Doc. 95–13987 Filed 6–7–95; 8:45 am]

BILLING CODE 4310–94–M

INTERSTATE COMMERCE COMMISSION

[Ex Parte No. 388 (Sub-No. 1)]

Intrastate Rail Rate Authority—Alabama

AGENCY: Interstate Commerce Commission.

ACTION: Notice of provisional recertification.

SUMMARY: The State of Alabama has filed an application for recertification. The Commission, under *State Intrastate Rail Rate Authority*, 5 I.C.C.2d 680, 685 (1989), provisionnally recertifies the State of Alabama to regulate intrastate rail rates, classifications, rules, and practices. After its review, the Commission will issue a recertification decision or take other appropriate action.

DATES: This provisional recertification will be effective on June 8, 1995.

FOR FURTHER INFORMATION CONTACT: Elaine Sehrt-Green, (202) 927–5269 or Beryl Gordon, (202) 927–5610 [TDD for hearing impaired: (202) 927–5721].

Decided: June 1, 1995.

By the Commission, David M. Konschnik, Director, Office of Proceedings.

Vernon A. Williams,

Secretary.

[FR Doc. 95–14057 Filed 6–7–95; 8:45 am]

BILLING CODE 7035–01–P

JUDICIAL CONFERENCE OF THE UNITED STATES

Proposed Long Range Plan for the Federal Courts

AGENCY: Judicial Conference of the United States.

ACTION: Notice of Conference actions concerning the Proposed Long Range Plan for the Federal Courts.

On March 14, 1995, the Judicial Conference of the United States received from its Committee on Long Range Planning a Proposed Long Range Plan for the Federal Courts. The Proposed Plan is similar in format and content to the tentative proposal that the Committee circulated to the public last November (59 FR 55704) but contains changes made by the Committee to reflect comments received in writing and at public hearings with respect to the earlier version.

In receiving the Proposed Plan, the Judicial Conference authorized public distribution of the document and took the following actions regarding the provisions of the Plan:

1. The Conference allowed its individual members until April 11, 1995, to request referral of any specific numbered recommendations to the appropriate Conference committees for further study and report to the September 1995 Conference session.

2. The Conference approved, effective April 12, 1995, all recommendations in the Proposed Plan not subsequently identified for further study and report as described above. Approval of a Plan recommendation includes the corresponding implementation strategies but not the supporting commentary.

In accordance with this procedure, the following items were approved, effective April 12, 1995, as part of the Long Range Plan for the Federal Courts:

Recommendations	Implementation strategies
19	
21	
26	
31	
32	32a–32b.
34	
35	35a–35d.
36–38	
39	39a, 39d–39e.
40–41	
43	
45	45a–45b.
46	46a–46b.
47	
50–51	
53	53a–53b.
54–57	
58	58a–58b.
59–62	
63	63a–63d.
64	
69	
71	
77–80	
81	81a–81b.
82–88	
91	91a–91c.
93	93a–93e.
94	94a–94c.
95	
97	
99	99a–99e.
100–101	

Also, in accordance with the prior decision of the Judicial Conference, individual Conference members requested that Conference action on the following items in the Proposed Plan be deferred pending further study by the appropriate committees:

Recommendations	Implementation strategies
1–3	
4	4a–4c.
5–8	
9	9a–9b.
10–11	
12	12a–12c.
13–15	
16	16a–16c.
17–18	
20	
22–25	
27	
28	28a–28b.
29	
30	30a–30c.
33	
	39b–39c.
42	42a–42b.
44	44a.
	45c.
48	
49	49a–49b.
52	52a–52c.
65–68	
70	70a–70c.
72–76	
89	
90	
92	92a–92g.
	94d.
96	
98	

Because most of the deferred items involve policy issues, they were assigned to the Conference committees with responsibility for the programs or topics in question and will be the subject of reports at the September 1995 Conference session. The Conference's Executive Committee was also assigned to consider the 11 recommendations (1–3, 5–6, 9, 11, 16, 30 76, 98) and one implementation strategy (39b) on which purely technical questions were raised. After consulting with Conference members, the Executive Committee, on May 31, 1995, approved those 12 items on the Conference's behalf with minor word changes intended to clarify, improve accuracy, or adjust tone without altering substantive meaning.

The Long Range Plan is a guide to policy making and administrative action by the Conference and other judicial branch authorities. However, only those items approved by the Judicial Conference represent Conference policies. All commentary on recommendations and implementation strategies and all other Plan provisions (including the recommendations and implementation strategies on which Conference members have requested further study) merely reflect the views of the Committee on Long Range Planning unless expressly approved by the Conference in subsequent proceedings.

FOR FURTHER INFORMATION CONTACT: Long Range Planning Office, Administrative Office of the United States Courts, Suite 4–170, One Columbus Circle, N.E., Washington, D.C. 20544, 202–273–1810.

Dated: June 1, 1995.

L. Ralph Mecham,

Secretary to the Judicial Conference of the United States.

[FR Doc. 95–14056 Filed 6–7–95; 8:45 am]

BILLING CODE 2210–01–M

DEPARTMENT OF JUSTICE

Drug Enforcement Administration

Manufacturer of Controlled Substances; Notice of Registration

By Notice dated April 4, 1995, and published in the **Federal Register** on April 12, 1995, (60 FR 18617), Games Chemicals, Inc., Industrial Park Road, Pennsville, New Jersey 08070, made application to the Drug Enforcement Administration (DEA) to be registered as a bulk manufacturer of the basic classes of controlled substances listed below:

Drug	Schedule
Methylphenidate (1724)	II
Amobarbital (2125)	II
Pentobarbital (2270)	II
Secobarbital (2315)	II
Glutethimide (2550)	II
Methadone (9250)	II
Methadone-intermediate (9254)	II
Dextropropoxyphene, bulk (non-dosage forms) (9273).	II

Two registered manufacturers filed a written request for a hearing with respect to Methylphenidate (1724). A third registered manufacturer filed a comment that the firm wishes to participate if a hearing is requested for Methylphenidate. Therefore, pursuant to Section 303 of the Comprehensive Drug Abuse Prevention and Control Act of 1970 and Title 21, Code of Federal Regulations, Section 1301.54(e), the Deputy Assistant Administrator, Office of Diversion Control, hereby orders that the application submitted by the above firm for registration as a bulk manufacturer of the basic classes of controlled substances listed above is granted with the exception of Methylphenidate (1724).

Dated: May 31, 1995.

Gene R. Haislip,

Deputy Assistant Administrator, Office of Diversion Control, Drug Enforcement Administration.

[FR Doc. 95–13996 Filed 6–7–95; 8:45 am]

BILLING CODE 4410–09–M

Manufacturer of Controlled Substances; Notice of Application

Pursuant to § 1301.43(a) of Title 21 of the Code of Federal Regulations (CFR), this is notice that on April 5, 1995, Radian Corporation, P.O. Box 201088, Mopac Blvd., Austin, Texas 78720, made application to the Drug Enforcement Administration (DEA) for registration as a bulk manufacturer of the basic classes of controlled substances listed below:

Drug	Schedule
Cathinone (1235)	I
Methcathinone (1237)	I
N-Ethylamphetamine (1475)	I
N,N-Dimethylamphetamine (1480)	I
Aminorex (1585)	I
4-Methylaminorex (cis isomer) (1590).	I
Methaqualone (2565)	I
Lysergic acid diethylamide (7315)	I
Tetrahydrocannabinols (7370)	I
Mescaline (7381)	I
3,4-Methylenedioxyamphetamine (7400).	I
3,4-Methylenedioxy-N-ethyl-amphetamine (7404).	I
3,4-Methylenedioxymeth-amphetamine (7405).	I
4-Methoxyamphetamine (7411)	I
Psilocybin (7437)	I
Psilocyn (7438)	I
Dihydromorphine (9145)	I
Normorphine (9313)	I
Acetylemthadol (9601)	I
Alphacetylmethadol except Levo-Alphacetylmethadol (9603).	I
Normethadone (9635)	I
3-Methylfentanyl (9813)	I
Amphetamine (1100)	II
Methamphetamine (1105)	II
Methylphenidate (1724)	II
Amobarbital (2125)	II
Pentobarbital (2270)	II
Secobarbital (2315)	II
Phencyclidine (7471)	II
1-Piperidinocyclohexanecarbonitrile (8603).	II
Dihydrocodeine (9120)	II
Oxycodone (9143)	II
Hydromorphone (9150)	II
Diphenoxylate (9170)	II
Benzoylecgonine (9180)	II
Ethylmorphine (9190)	II
Hydrocodone (9193)	II
Isomethadone (9226)	II
Meperidine (9230)	II
Methadone (9250)	II
Methadone-intermediate (9254)	II
Morphine (9300)	II
Levo-alphacetylmethadol (9648)	II
Oxymorphone (9652)	II
Alfentanil (9737)	II
Sufentanil (9740)	II
Fentanyl (9801)	II

The firm plans to manufacture deuterated and non-deuterated analytical reference standards.

Any other such applicant and any person who is presently registered with DEA to manufacture such substances may file comments or objections to the issuance of the above application and may also file a written request for a hearing thereon in accordance with 21 CFR 1301.54 and in the form prescribed by 21 CFR 1316.47.

Any such comments, objections, or requests for a hearing may be addressed to the Deputy Assistant Administrator, Office of Diversion Control, Drug Enforcement Administration, United States Department of Justice, Washington, D.C. Federal Register Representative (CCR), and must be filed no later than July 10, 1995.

Dated: May 31, 1995.

Gene R. Haislip,

Deputy Assistant Administrator, Office of Diversion Control, Drug Enforcement Administration.

[FR Doc. 95–13995 Filed 6–7–95; 8:45 am]

BILLING CODE 4410–09–M

Manufacturer of Controlled Substances; Notice of Application

Pursuant to § 1301.43(a) of Title 21 of the Code of Federal Regulations (CFR), this is notice that on April 24, 1995, Research Triangle Institute, Kenneth H. Davis, Jr., Hermann Building, East Institute Drive, P.O. Box 12194, Research Triangle Park, North Carolina 27709, made application to the Drug Enforcement Administration (DEA) for registration as a bulk manufacturer of the basic classes of controlled substances listed below:

Drug	Schedule
Marihuana (7360)	I
Cocaine (9041)	II

The Institute will manufacture Marihuana cigarettes for the National Institute on Drug Abuse (NIDA) and the Cocaine will be used for reference standards, human and animal research, as dictated by NIDA.

Any other such applicant and any person who is presently registered with DEA to manufacture such substances may file comments or objections to the issuance of the above application and may also file a written request for a hearing thereon in accordance with 21 CFR 1301.54 and in the form prescribed by 21 CFR 1316.47.

Any such comments, objections, or requests for a hearing may be addressed to the Deputy Assistant Administrator, Office of Diversion Control, Drug Enforcement Administration, United States Department of Justice,

Washington, D.C. 20537, Attention: DEA Federal Register Representative (CCR), and must be filed no later than July 10, 1995.

Dated: May 30, 1995.

Gene R. Haislip,

Deputy Assistant Administrator, Office of Diversion Control, Drug Enforcement Administration.

[FR Doc. 95–13989 Filed 6–7–95; 8:45 am]

BILLING CODE 4410–09–M

Importation of Controlled Substances; Notice of Application

Pursuant to Section 1008 of the Controlled Substances Import and Export Act (21 U.S.C. 958(i)), the Attorney General shall, prior to issuing a registration under this Section to a bulk manufacturer of a controlled substance in Schedule I or II and prior to issuing a regulation under Section 1002(a) authorizing the importation of such a substance, provide manufacturers holding registrations for the bulk manufacture of the substance an opportunity for a hearing.

Therefore, in accordance with Section 1311.42 of Title 21, Code of Federal Regulations (CFR), notice is hereby given that on April 24, 1995, Research Triangle Institute, Kenneth H. Davis, Jr., Hermann Building, East Institute Drive, P.O. Box 12194, Research Triangle Park, North Carolina 27709, made application to the Drug Enforcement Administration to be registered as an importer of the basic classes of controlled substances listed below:

Drug	Schedule
Marihuana (7360)	I
Cocaine (9041)	II

The Institute plans to import the listed controlled substances to make Marihuana cigarettes and reference standards under the Institute's manufacturer registration.

Any manufacturer holding, or applying for, registration as a bulk manufacturer of these basic classes of controlled substances may file written comments on or objections to the application described above and may, at the same time, file a written request for a hearing on such application in accordance with 21 CFR 1301.54 in such form as prescribed by 21 CFR 1216.47.

Any such comments, objections, or requests for a hearing may be addressed to the Deputy Assistant Administrator, Office of Division Control, Drug Enforcement Administration, United States Department of Justice, Washington, D.C. 20537, Attention: DEA Federal Register Representative (CCR), and must be filed no later than (30 days from publication).

This procedure is to be conducted simultaneously with and independent of the procedures described in 21 CFR 1311.42 (b), (c), (d), (e), and (f). As noted in a previous notice at 40 FR 43745–46 (September 23, 1975), all applicants for registration to import basic classes of any controlled substances in Schedule I or II are and will continue to be required to demonstrate to the Deputy Assistant Administrator, Office of Division Control, Drug Enforcement Administration that the requirements for such registration pursuant to 21 U.S.C. 958(a), 21 U.S.C. 823(a), and 21 CFR 1311.42 (a), (b), (c), (d), (e), and (f) are satisfied.

Dated: May 30, 1995.

Gene R. Haislip,

Deputy Assistant Administrator, Office of Diversion Control, Drug Enforcement Administration.

[FR Doc. 95–13994 Filed 6–7–95; 8:45 am]

BILLING CODE 4410–09–M

Information of Controlled Substances; Notice of Application

Pursuant to Section 1008 of the Controlled Substances Import and Export Act (21 U.S.C. 958(i)), the Attorney General shall, prior to issuing a registration under this Section to a bulk manufacturer of a controlled substance in Schedule I or II and prior to issuing a regulation under Section 1002(a) authorizing the importation of such a substance, provide manufacturers holding registrations for the bulk manufacture of the substance an opportunity for a hearing.

Therefore, in accordance with Section 1311.42 of Title 21, Code of Federal Regulations (CFR), notice is hereby given that on April 15, 1995, Radian Corporation, 8501 Mopac Blvd., P.O. Box 201088, Austin, Texas 78720, made application to the Drug Enforcement Administration to be registered as an importer of the basic classes of controlled substances listed below:

Drug	Schedule
Ibogaine (7260)	I
Etorphine (except HC1) (9056)	I
Heroin (9200)	I
Cocaine (9041)	II
Codeine (9050)	II
Oxycodone (9143)	II
Dextropropoxyphene, bulk (non-dosage forms) (9273).	II
Morphine (9300)	II
Thebaine (9333)	II
Oxymorphone (9652)	II

The firm plans to import small quantities of the listed controlled substances for the manufacture of analytical reference standards.

Any manufacturer holding, or applying for, registration as a bulk manufacturer of these basic classes of controlled substances may file written comments on or objections to the application described above and may, at the same time, file a written request for a hearing on such application in accordance with 21 CFR 1301.54 in such form as prescribed by 21 CFR 1316.47.

Any such comments, objections, or requests for a hearing may be addressed to the Deputy Assistant Administrator, Office of Diversion Control, Drug Enforcement Administration, United States Department of Justice, Washington, D.C. 20537, Attention: DEA Federal Register Representative (CCR), and must be filed no later than July 10, 1995.

This procedure is to be conducted simultaneously with and independent of the procedures described in 21 CFR 1311.42 (b), (c), (d), (e), and (f). As noted in a previous notice at 40 FR 43745–46 (September 23, 1975), all applicants for registration to import basic classes of any controlled substances in Schedule I or II are and will continue to be required to demonstrate to the Deputy Assistant Administrator, Office of Diversion Control, Drug Enforcement Administration that the requirements for such registration pursuant to 21 U.S.C. 958(a), 21 U.S.C. 823(a), and 21 CFR 1311.42 (a), (b), (c), (d), (e), and (f) are satisfied.

Dated: May 30, 1995.

Gene R. Haislip,

Deputy Assistant Administrator, Office of Diversion Control, Drug Enforcement Administration.

[FR Doc. 95–13993 Filed 6–7–95; 8:45 am]

BILLING CODE 4410–09–M

Importation of Controlled Substances; Notice of Application

Pursuant to Section 1008 of the Controlled Substances Import and Export Act (21 U.S.C. 958(i)), the Attorney General shall, prior to issuing a registration under this section to a bulk manufacturer of a controlled substance in Schedule I or II and prior to issuing a regulation under Section 1002(a) authorizing the importation of such a substance, provide manufacturers holding registrations for the bulk manufacture of the substance an opportunity for a hearing.

Therefore, in accordance with Section 1311.42 of Title 21, Code of Federal

Regulations (CFR), notice is hereby given that on March 17, 1995, Stanford Seed Company, 340 South Muddy Creek Road, Denver, Pennsylvania 17517, made application to the Drug Enforcement Administration to be registered as an importer of Marihuana (7360), a basic class of controlled substance in Schedule I.

The firm plans to import Marihuana seed which will be rendered non-viable and used as bird seed.

Any manufacturer holding, or applying for, registration as a bulk manufacturer of this basic class of controlled substance may file written comments on or objections to the application described above and may, at the same time, file a written request for a hearing on such application in accordance with 21 CFR 1301.54 in such form as prescribed by 21 CFR 1316.47.

Any such comments, objections, or requests for a hearing may be addressed to the Deputy Assistant Administrator, Office of Diversion Control, Drug Enforcement Administration, United States Department of Justice, Washington, DC 20537, Attention: DEA Federal Register Representative (CCR), and must be filed no later than July 10, 1995.

This procedure is to be conducted simultaneously with and independent of the procedures described in 21 CFR 1311.42 (b), (c), (d), (e), and (f). As noted in a previous notice at 40 FR 43745–46 (September 23, 1975), all applicants for registration to import a basic class of any controlled substance in Schedule I or II are and will continue to be required to demonstrate to the Deputy Assistant Administrator, Office of Diversion Control, Drug Enforcement Administration that the requirements for such registration pursuant to 21 U.S.C. 958(a), 21 U.S.C. 823(a), and 21 CFR 1311.42 (a), (b), (c), (d), (e), and (f) are satisfied.

Dated: May 30, 1995.

Gene R. Haislip,

Deputy Assistant Administrator, Office of Diversion Control, Drug Enforcement Administration.

[FR Doc. 95–13992 Filed 6–7–95; 8:45 am]

BILLING CODE 4410–09–M

Importation of Controlled Substances; Notice of Application

Pursuant to Section 1008 of the Controlled Substances Import and Export Act (21 U.S.C. 958(i)), the Attorney General shall, prior to issuing a registration under this Section to a bulk manufacturer of a controlled substance in Schedule I or II and prior to issuing a regulation under Section 1002(a) authorizing the importation of such a substance, provide manufacturers holding registrations for the bulk manufacture of the substance an opportunity for a hearing.

Therefore, in accordance with Section 1311.42 of Title 21, Code of Federal Regulations (CFR), notice is hereby given that on February 15, 1995, Roxane Laboratories, Inc., 1809 Wilson Road, P.O. Box 16532, Columbus, Ohio 43216–6532, made application to the Drug Enforcement Administration to be registered as an importer of Cocaine (9041) a basic class of controlled substance in Schedule II.

The firm plans to import Cocaine to make topical solutions under its manufacturer registration for distribution to the firms customers.

Any manufacturer holding, or applying for, registration as a bulk manufacturer of this basic class of controlled substance may file written comments on or objections to the application described above and may, at the same time, file a written request for a hearing on such application in accordance with 21 CFR 1301.54 in such form as prescribed by 21 CFR 1316.47.

Any such comments, objections, or requests for a hearing may be addressed to the Deputy Assistant Administrator, Office of Diversion Control, Drug Enforcement Administration, United States Department of Justice, Washington, D.C. 20537, Attention: DEA Federal Register Representative (CCR), and must be filed no later than July 10, 1995.

This procedure is to be conducted simultaneously with and independent of the procedures described in 21 CFR 1311.42(b), (c), (d), (e), and (f). As noted in a previous notice at 40 FR 43745–46 (September 23, 1975), all applicants for registration to import a basic class of any controlled substance in Schedule I or II are and will continue to be required to demonstrate to the Deputy Assistant Administrator, Office of Diversion Control, Drug Enforcement Administration that the requirements for such registration pursuant to 21 U.S.C. 958(a), 21 U.S.C. 823(a), and 21 CFR 1311.42 (a), (b), (c), (d), (e), and (f) are satisfied.

Dated: May 30, 1995.

Gene R. Haislip,

Deputy Assistant Administrator, Office of Diversion Control, Drug Enforcement Administration.

[FR Doc. 95–13991 Filed 6–7–95; 8:45 am]

BILLING CODE 4410–09–M

Manufacturer of Controlled Substances; Notice of Application

Pursuant to Section 1301.43(a) of Title 21 of the Code of Federal Regulations (CFR), this is notice that on March 16, 1995, Johnson & Johnson Pharmaceutical Partners, HC02 State Road 933, KMO.1 Mamey Ward, HC–02 Box 19250, Gurabo, Puerto Rico 00778–9629, made application to the Drug Enforcement Administration (DEA) for registration as a bulk manufacturer of the basic classes of controlled substances listed below:

Drug	Schedule
Alfentanil (9737)	II
Sufentanil (9740)	II

The firm plans to manufacture the listed controlled substances for bulk distribution to its customers.

Any other such applicant and any person who is presently registered with DEA to manufacture such substances may file comments or objections to the issuance of the above application and may also file a written request for a hearing thereon in accordance with 21 CFR 1301.54 and in the form prescribed by 21 CFR 1316.47.

Any such comments, objections, or requests for a hearing may be addressed to the Deputy Assistant Administrator, Office of Diversion Control, Drug Enforcement Administration, United States Department of Justice, Washington, D.C. 20537, Attention: DEA Federal Register Representative (CCR), and must be filed no later than July 10, 1995.

Dated: May 30, 1995.

Gene R. Haislip,

Deputy Assistant Administrator, Office of Diversion Control, Drug Enforcement Administration.

[FR Doc. 95–13990 Filed 6–7–95; 8:45 am]

BILLING CODE 4410–09–M

NATIONAL AERONAUTICS AND SPACE ADMINISTRATION

[Notice (95–035)]

Intent to Grant an Exclusive Patent License

AGENCY: National Aeronautics and Space Administration.

ACTION: Notice of intent to grant a patent license.

SUMMARY: NASA hereby gives notice of intent to grant Cellulose Conversion Technology, Bedford, Texas 76095, a partially exclusive license to practice the invention protected by U.S. patent

No. 5,196,069 entitled ''Cellulose Processing Using Microwave Pretreatment,'' which was issued March 23, 1993, by the United States of America as represented by the Administrator of the National Aeronautics and Space Administration. The partially exclusive license will contain appropriate terms and conditions to be negotiated in accordance with the Department of Commerce patent licensing regulations (37 CFR part 404). NASA will negotiate the final terms and conditions and grant the license unless within 60 days of the date of this notice, the Director of Patent Licensing receives written objections to the grant, together with supporting documentation. The Director of Licensing will review all written responses to the notice and then recommend to the Associate General Counsel (Intellectual Property) whether to grant the license.

DATES: Comments to the notice must be received by August 7, 1995.

ADDRESS: National Aeronautics and Space Administration, Code GP, Washington, DC 20546.

FOR FURTHER INFORMATION CONTACT: Mr. Harry Lupuloff, NASA, Director of Patent Licensing, (202) 358–2041.

Dated: June 1, 1995.

Edward A. Frankie,

General Counsel.

[FR Doc. 95–14083 Filed 6–7–95; 8:45 am]

BILLING CODE 7510–01–M

[Notice (95–036)]

Intent To Grant a Patent License

AGENCY: National Aeronautics and Space Administration.

SUMMARY: NASA intends to grant Total Quality Measures, Inc., a corporation of the State of New Hampshire, having its headquarters in Merrimack, New Hampshire, an exclusive, royalty-bearing, revcable license to practice U.S. Patent No. 5,267,950, entitled ''Automatic Locking Orthotic Knee Device'' and U.S. Patent Application Serial No. 08/422,961, entitled ''Automatic Locking Knee Brace Joint.'' U.S. Patent No. 5,267,950 and Serial 08/422,961 pertain to hinge-like devices for knee brace that automatically lock in place under pressure. The patent license will be for a limited number of years and will contain appropriate terms and conditions negotiated in accordance with the Department of Commerce patent licensing regulations, 37 CFR 404.1 *et seq.* NASA will grant the patent license in accordance with its licensing regulations unless the Director of Patent Licensing receives written objections to the grant, together with any supporting documentation, within 60 days of the date of this notice. The Director of Patent Licensing will review all written objections to the grant and then recommend to the Associate General Counsel (Intellectual Property) whether to grant the license.

DATES: Written objections to this proposed license grant must be received by August 7, 1995.

ADDRESS: National Aeronautics and Space Administration, Code GP, Washington, DC 20546.

FOR FURTHER INFORMATION CONTACT: Mr. Harry Lupuloff, NASA, Director of Patent Licensing at (202) 358–2041.

Dated: June 1, 1995.

Edward A. Frankie,

General Counsel.

[FR Doc. 95–14084 Filed 6–7–95; 8:45 am]

BILLING CODE 7510–01–M

CORPORATION FOR NATIONAL AND COMMUNITY SERVICE

Center for Excellence in the Environment Request for Public Participation

AGENCY: Corporation for National and Community Service.

ACTION: Notice.

SUMMARY: The Center for Excellence in the Environment, a component of the Corporation for National and Community Service (the Corporation), seeks input from organizations and persons knowledgeable in the area of environmental training and technical assistance.

DATES: The Corporation seeks the participation of the public in this process until June 23, 1995.

ADDRESSES: Responses to this notice should be sent to the Center on Excellence in the Environment, P.O. Box 29995, The Presidio, San Francisco, CA 94129; fax (415) 561–5955. For individuals with disabilities, the information contained in this notice will be made available in alternative formats, upon request.

FOR FURTHER INFORMATION CONTACT: Pipo Bui, tel. (415) 561–5950.

SUPPLEMENTARY INFORMATION: The Corporation is a government corporation that engages Americans of all ages and backgrounds in community-based service. This service addresses the nation's education, public safety, human, and environmental needs to achieve direct and demonstrable results. In doing so, the Corporation fosters civic responsibility, strengthens the ties that bind us together as a people, and provides educational opportunity for those who make a substantial commitment to service.

Pursuant to the National and Community Service Act of 1990, as amended, 42 U.S.C. 12501 *et seq.*, the Corporation may ''conduct, directly or by grant or contract, appropriate training programs'' to promote leadership development in national service programs. The Corporation has established the Presidio Leadership Center (PLC) to carry out this objective.

The Center for Excellence in the Environment (the Center), which operates within the PLC, is designed to provide technical assistance to the Corporation's environmental national service programs. This assistance may include disseminating information, designing educational materials, creating networks of persons knowledgeable in environmental training and technical assistance, identifying model service programs and sharing ''lessons'' learned from ongoing programs. The Center plans to build a communications infrastructure of environmental programs, through regional networks of trainers and/or consultants, conferences, and other forms of communication between such programs. The Center seeks to develop training and technical assistance programs addressing both natural and neighborhood (or community) aspects of the environment.

The Center seeks input from persons and programs with experience in forming networks of trainers and environmental experts, planning and hosting conferences, and managing and supporting a decentralized network of national service programs. After receiving this input, the Center will decide whether and how to implement a program, directly or by grant or contract, with appropriate public notice published in the **Federal Register**.

Dated: June 5, 1995.

Terry Russell,

General Counsel.

[FR Doc. 95–14075 Filed 6–7–95; 8:45 am]

BILLING CODE 6050–28–P

SECURITIES AND EXCHANGE COMMISSION

[Rel. No. IC–21108; 812–7689]

Frank Russell Investment Company, et al.; Notice of Application

June 2, 1995.

AGENCY: Securities and Exchange Commission (''SEC'').

ACTION: Notice of Application for Exemption under the Investment Company Act of 1940 (the ''Act'').

APPLICANTS: Frank Russell Investment Company (''FRIC''), Russell Insurance Funds, Inc. (''RIF''), Frank Russell Investment Management Company (''FRIMCo''), Frank Russell Company (''FRC''), and Russell Fund Distributors, Inc. (''RFD'').

RELEVANT ACT SECTIONS: Exemption requested under section 6(c) of the Act from the provisions of section 15(a) and rule 18f–2; and from certain disclosure requirements set fort in item 22 of Schedule 14A under the Securities Exchange Act of 1934 (the ''Exchange Act''); items 2, 5(b)(iii), and 16(a)(iii) of Form N–1A; item 3 of Form N–14; item 48 of Form N–SAR; and sections 6–07(2)(a), (b), and (c) of Regulation S–X.

SUMMARY OF APPLICATION: Applicants seek a conditional order permitting FRIMCo to enter into sub-advisory contracts without receiving prior shareholder approval, and permitting FRIC and RIF (the ''Funds'') to disclose only aggregate sub-advisory fees for each fund in their prospectuses and other reports.

FILING DATES: The application was filed on February 19, 1991, and amended and restated on December 20, 1993, April 15, 1994, May 3, 1995, and May 10, 1995.

HEARING OR NOTIFICATION OF HEARING: An order granting the application will be issued unless the SEC orders a hearing. Interested persons may request a hearing by writing to the SEC's Secretary and serving applicant with a copy of the request, personally or by mail. Hearing requests should be received by the SEC by 5:30 p.m. on June 27, 1995, and should be accompanied by proof of service on the applicant, in the form of an affidavit or, for lawyers, a certificate of service. Hearing requests should state the nature of the writer's interest, the reason for the request, and the issues contested. Persons who wish to be notified of a hearing may request notification by writing to the SEC's Secretary.

ADDRESSES: Secretary, SEC, 450 Fifth Street NW., Washington, D.C. 20549. Applicant, 909 A Street, Tacoma, Washington 98402.

FOR FURTHER INFORMATION CONTACT: Mary Kay Frech, Senior Attorney, at (202) 942–0579, or C. David Messman, Branch Chief, at (202) 942–0564 (Division of Investment Management, Office of Investment Company Regulation).

SUPPLEMENTARY INFORMATION: The following is a summary of the application. The complete application may be obtained for a fee at the SEC's Public Reference Branch.

Applicants' Representations

1. FRIC is a registered no-load, open-end management investment company organized as a Massachusetts business trust. FRIC has twenty-two separate series, each constituting a different investment portfolio. All of FRIC's series follow the conventional practice of paying their investment advisory fee from the series' assets. Ten of FRIC's series require investors to pay an additional investment services fee directly to their investment adviser, FRIMCo, for shareholder services (the ''External Fee FRIC Funds'').[1] The remaining twelve series pay no investment services fee. FRIC's shares are offered predominantly to institutional fiduciaries, such as bank trust departments and registered investment advisers, which have investment discretion over their clients' accounts. A limited number of shares are offered to smaller institutional investors such as endowment funds and to individual investors who have a direct, contractual relationship with FRIMCo. Each investor in each of FRIC's series executes an asset management services agreement with FRTAMCo, the different forms of which reflect the different services required by different categories of investors.

2. RIF is a registered no-load, open-end management investment company organized as a Maryland corporation. It is proposed to consist of several separate series, each constituting a different investment portfolio. RIF shares initially will be offered exclusively to insurance separate accounts as the funding vehicle for variable and fixed annuity and life insurance products. Each series of RIF follows the conventional practice of paying FRIMCo an advisory fee from the series' assets. The Funds' separate series are referred to herein as the ''Portfolios.''

3. FRIMCo is a registered investment adviser, organized as a Washington corporation. The Funds have engaged FRIMCo as their investment adviser pursuant to an investment management agreement. FRIMCo as engaged, or will engage, one or more sub-advisers (''Money Managers'') pursuant to an investment management agreement (''Portfolio Management Agreement'') to exercise investment discretion over the assets of each Portfolio. Each Portfolio, except for the money market Portfolios and a real estate securities Portfolio, has two or more Money Managers.

4. FRC, the parent company of FRIMCo, is a registered investment adviser, organized as a Washington corporation. FRC provides portfolio structuring and Money Manager evaluation services to FRIMCo, but receives no separately stated fee from the Funds for its services.

5. RFD is a registered broker-dealer, organized as a Washington corporation. RFD is a wholly-owned subsidiary of FRIMCo and serves as the distributor of the Funds' shares.

6. In contrast to the majority of investment companies that have a single organization serving as the manager/administrator and the investment adviser, the Funds divide responsibility for corporate management and investment advice between FRIMCo and the Money Managers. The Funds employ a ''multi-style, multi-manager'' method of investment, under which FRIMCo, using the consulting services of FRC, selects and monitors for each Portfolio multiple Money Managers using a range of manager styles.

7. FRIMCo performs internal due diligence on prospective Money Managers for each Portfolio and thereafter monitors their performance through quantitative and qualitative analysis, as well as actual consultations with the Money Managers. FRIMCo has responsibility for communicating performance expectations and evaluations to the Money Managers, supervising compliance with the Portfolios' investment policies and objectives, recommending to the board of directors of the Funds whether Portfolio Management Agreements should be renewed, modified, or terminated, and recommending to the Funds' directors the addition of new Money Managers. For its services, FRIMCo receives a management fee from the Portfolios. FRIMCo pays the Money Managers from these fees.

8. In 1981, the SEC issued an order to permit the FRIC Portfolios to hire and contract with Money Managers without

[1] Investors in the External Fee FRIC Funds include (a) banking institutions, broker-dealers, investment advisers, charitable foundations, endowments, and qualified pension plans, including IRA plans, which have negotiated and entered into a written agreement with FRIMCo establishing the investment services fee to be paid FRIMCo for assets invested in the External Fee FRIC Funds by those entities both for their own account as well as on behalf of their clients for whom they may be acting in either an agency or discretionary capacity, and (b) individuals with investable assets of $5 million or more, who have negotiated and entered into a written agreement wit FRIMCo for all assets invested in the External Fee FRIC Funds. Applicants also may make shares of the External Fee FRIC Funds available to employees of FRC and its affiliates. These employees will pay an investment services fee to FRIMCo which is consistent for all employees.

obtaining shareholder approval through a proxy solicitation, and to exempt the FRIC Portfolios from the requirement to discuss the fees paid for FRIMCo to the Money Managers of the funds.[2] In 1988, the SEC issued an order to exempt the RIF Funds from the requirement to disclose the fees paid by FRIMCo to the Money Managers of the RIF Portfolios.[3] The requested order would supersede the 1981 and 1988 orders.

9. Applicants request an exemption from section 15(a) and rule 18f–2 to permit FRIMCo to enter into Portfolio Management Agreements with Money Managers, other than Money Managers that are affiliated persons (as defined in section 2(a)(3) of the Act) of the Fund for FRIMCo other than by reason of serving as a Money Manager to one or more of the Funds (an ''Affiliated Money Manager''), without such agreements being approved by the shareholders of the applicable Partfolio. In lieu of the shareholder voting requirement, applicants will provide shareholders with an information statement that includes all the information concerning a new Money Manager or Portfolio Management Agreement that would be included in a proxy statement.

10. Applicants propose to disclose (both as a dollar amount and as a percentage of a Portfolio's net assets) in the Funds' registration statements and other public documents only the aggregate amount of fees paid by FRIMCo to all the Money Managers of a Portfolio (''Aggregate Fee Disclosure''). Aggregate Fee Disclosure means: (a) the total advisory fee charged by FRIMCo to the Portfolio; (b) the aggregate fees paid by FRIMCo to all Money Managers managing assets of the Portfolio; and (c) the net advisory fee retained by FRIMCo with respect to the Portfolio after FRIMCo pays all Money Managers managing assets of that Portfolio. For any Fund that employs an Affiliated Money Manager, ''Aggregate Fee Disclosure'' also will include separate disclosure of any fees paid to such Affiliated Money Manager.

Applicants' Legal Analysis

1. Section 15(a) makes it unlawful for any person to act as an investment adviser to a register investment company except pursuant to a written contract that has been approved by a majority of the investment company's outstanding securities. Rule 18f–2 provides that each series or class of stock in a series company affected by a matter must approve such matter if the Act requires shareholder approval.

2. Applicants state that primary responsibility for management of the Funds, in particular, the selection and supervision of the Money Managers, will be vested in FRIMCo, subject to oversight and approval by the Funds' directors. Applicants argue that the multi-manager, multi-style structure used by FRIMCo is clearly described in the Funds' prospectuses, and that shareholders invest in the Funds expecting FRIMCo to change Money Managers when appropriate. Applicants also assert that requiring shareholders to approve every Money Manager change would prevent FRIMCo from performing on a timely and effective basis the principal function the shareholders are paying it to perform—the selection, monitoring, and changing of Money Managers. Applicants contend that requiring shareholder approval would not only result in unnecessary administrative expense to a Portfolio, but could result in harmful delays in executing changes in Money Managers that FRIMCo and the Funds' directors may determine are necessary.

3. Section 15(a)(1) provides, in relevant part, that it is unlawful for any person to act as an investment adviser to a registered investment company except pursuant to a written contract which ''precisely describes all compensation to be paid thereunder.''

4. Items 2, 5(b)(iii), and 16(a)(iii) of Form N–1A require the Funds to disclose in their prospectuses the investment adviser's compensation and the method of computing the advisory fee.

5. Item 3 of Form N–14, the registration form for business combinations involving mutual funds, requires the inclusion of a ''table showing the current fees for the registrant and the company being acquired and pro forma fees, if different, for the registrant after giving effect to the transaction using the format prescribed'' in item 2 of Form N–1A.

6. Rule 20a–1 under the Act requires proxies solicited with respect to an investment company to comply with Schedule 14A under the Exchange Act. Item 22 of Schedule 14A sets forth the requirements concerning the information that must be included in a proxy statement. Item 22(a)(3)(iv) requires a proxy statement for a shareholder meeting at which a new fee will be established or an existing fee increased to include a table of the current and pro forma fees using the format prescribed in item 2 of Form N–1A. Items 122(c)(1)(ii), 22(c)(1)(iii), 22(c)(8), and 22(c)(9), taken together, require that a proxy statement for a shareholder meeting at which an advisory contract is to be voted upon shall include the ''rate of compensation of the investment adviser,'' the ''aggregate amount of the investment adviser's fee,'' the ''terms of the contract to be acted upon,'' and, if a change in fees is proposed, the existing and proposed rate schedule for advisory fees paid to their advisers, including the Money Managers.

7. Item 48 of Form N–SAR provides that the Funds must disclose the rate schedule for advisory fees paid to their advisers, including the Money Managers.

8. Items 6–07(2) (a), (b), and (c) of Regulation S–X require that the Funds' financial statements contain information concerning fees paid to the Money Managers.

9. Applicants submit that it is consistent with the policy of the Act and the protection of investors to exempt applicants from the requirement to disclose individual Money Manager fees because applicants believe that such disclosure is likely to inhibit or eliminate FRIMCo's ability to negotiate fees below the Money Managers' ''posted'' fee schedules. Applicants argue that any advantage that FRIMCo would gain in negotiating fee arrangements with Money Managers would inure ultimately to the benefit of the shareholders of the Portfolios because it would be possible for FRIMCo to pass the benefits of a lower sub-advisory fee on to the Portfolios, although FRIMCo is not legally or contractually obligated to do so.[4] They also maintain that the ability to negotiate fee reductions is a critical element in their multi-style, multi-manager fund structure and the Funds' ability to offer investors a multi-manager investment product at a price which is competitive with single adviser funds.

10. Applicants assert that because all shareholders of the Funds will be fully advised of the fees charged by FRIMCo for its management services (which include compensating the Money Managers), each shareholder will have the information to determine whether, in its judgment, the total package of

[2] Investment Company Act Release Nos. 11944 (Sept. 21, 1981) (notice) and 11986 (Oct. 14, 1981) (order). At the time of the 1981 order, FRIC had only seven portfolios, all of whose investors paid an advisory fee directly to FRIMCo.

[3] Investment Company Act Release Nos. 16309 (Mar. 9, 1988) (notice) and 16351 (Apr. 7, 1988) (order).

[4] Fund directors would be required to take the amounts paid by FRIMCo to the Money Managers into account when assessing the profitability of the advisory agreements to FRIMCo during the course of their annual review of the Funds' management and sub-advisory arrangements under sections 15 and 36(b) of the Act.

services is priced reasonably in relation to the services and costs that the investor could obtain elsewhere. Moreover, applicants believe that the Aggregate Fee Disclosure will provide investors of each Portfolio with sufficient and clear information to determine whether they are receiving good value from FRIMCo and the Money Managers of that Portfolio and whether to redeem their shares if dissatisfied.

11. Section 6(c) authorizes the Commission to exempt persons or transactions from the provisions of the Act to the extent that such exemptions are appropriate in the public interest and consistent with the protection of investors and the purposes fairly intended by the policies and provisions of the Act. Applicants assert that the section 6(c) standards for exemption are met.

Applicants' Conditions

Applicants agree that the following conditions may be imposed in any order of the Commission granting the requested relief:

1. Each Fund will disclose in its registration statement the Aggregate Fee Disclosure.

2. FRIMCo will not enter into a Portfolio Management Agreement with any Affiliated Money Manager without such agreement, including the compensation to be paid thereunder, being approved by the shareholders of the applicable Portfolio.

3. At all times, a majority of the Funds' directors or trustees will be persons each of whom is not an ''interested person'' of the Funds as defined in section 2(a)(19) of the Act (''Independent Directors''), and the nomination of new or additional Independent Directors will be placed with the discretion of the then existing Independent Directors.

4. When a Money Manager change is proposed for a Portfolio with an Affiliated Money Manager, the Funds' directors or trustees, including a majority of the Independent Directors, will make a separate finding, reflected in each applicable Fund's board minutes, that such change is in the best interests of the Portfolio and its shareholders and does not involve a conflict of interest from which FRIMCo or the Affiliated Money Manager derives an inappropriate advantage.

5. Independent counsel knowledgeable about the Act and the duties of Independent Directors will be engaged to represent the Independent Directors of the Funds. The selection of such counsel will be placed within the discretion of the then existing Independent Directors.

6. FRIMCo will provide the Funds' directors, no less frequently than quarterly, information about FRIMCo's profitability on a per-Portfolio basis. Such information will reflect the impact on profitability of the hiring or termination of any Money Manager during the applicable quarter.

7. Whenever a Money Manager is hired or terminated, FRIMCo will provide the Funds' directors information showing the expected impact on FRIMCo's profitability.

8. FRIMCo will provide general management and administrative services to the Funds, and, subject to review and approval by their directors will: (a) set the Funds' overall investment strategies; (b) select Money Managers; (c) allocate and, when appropriate, reallocate the Portfolios' assets among Money Managers; (d) monitor and evaluate the performance of Money Managers; and (e) ensure that the Money Managers comply with the Funds' investment objectives, policies, and restrictions.

9. Each RIF Fund will obtain the consent of its sole shareholders before relying upon the order with respect to shareholder approval of Money Manager changes. Existing Portfolios of the FRIC Funds will proceed promptly (within one year) to obtain shareholder approval to operate the Portfolios in accordance with the order, but, prior to the holding of the shareholder meeting, will continue to operate in accordance with the 1981 order. Portfolios of the Funds created after the issuance of the order will disclose their reliance on the order in their prospectuses and will have such reliance approved by consent of their sole shareholder.

10. Within 60 days of the hiring of any new Money Manager or the implementation of any proposed material change in a Portfolio Management Agreement, FRIMCo will furnish shareholders all information about a new Money Manager or Portfolio Management Agreement that would be included in a proxy statement, except as modified by the order with respect to the disclosure of fees paid to the Money Managers. Such information will include Aggregate Fee Disclosure and any change in such disclosure caused by the addition of a new Money Manager or any proposed material change in a Portfolios's Management Agreement. FRIMCo will meet this condition by providing shareholders, within 60 days of the hiring of a Money Manager or the implementation of any material change to the terms of a Portfolio Management Agreement, with an information statement meeting the requirements of Regulation 14C and Schedule 14C under the Exchange Act. The information statement also will meet the requirements of Schedule 14A, except as modified by the order with respect to the disclosure of fees paid to the Money Managers.

11. No director, trustee, or officer of the Funds or FRIMCo will own directly or indirectly (other than through a polled investment vehicle that is not controlled by any such director, trustee, or officer) any interest in a Money Manager except for (a) ownership of interests in FRIMCo or any entity that controls, in controlled by, or is under common control with FRIMCo; or (b) ownership of less than 1% of the outstanding securities of any class of equity or debt of a publicly-traded company that is either a Money Manager or an entity that controls, is controlled by, or is under common control with a Money Manager.

12. The Funds will disclose in their prospectuses the existence, substance, and effect of any order granted pursuant to the application.

By the Commission.

Johathan G. Katz,

Secretary.

[FR Doc. 95–14002 Filed 6–7–95; 8:45 am]

BILLING CODE 8010–01–M

[Release No. 34–35787; File No. 600–23]

Self-Regulatory Organizations; Government Securities Clearing Corporation; Order Approving Application for Extension of Temporary Registration as a Clearing Agency

May 31, 1995.

On February 3, 1995, Government Securities Clearing Corporation (''GSCC'') filed with the Securities and Exchange Commission (''Commission'') a request pursuant to Section 19(a)[1] of the Securities Exchange Act of 1934 (''Act'') that the Commission grant GSCC full registration as a clearing agency under Section 17A of the Act[2] or in the alternative extend GSCC's temporary registration as a clearing agency until such time as the Commission is able to grant GSCC permanent registration.[3] On March 13,

[1] 15 U.S.C. 78s(a)(1) (1988).

[2] 15 U.S.C. 78q–1 (1988).

[3] Letter from Charles A. Moran, President, GSCC, to Brandon Becker, Director, Division of Market Regulation, Commission (February 3, 1995) (''Registration Letter''). On May 24, 1988, the Commission granted GSCC's initial application for registration as a clearing agency pursuant to Sections 17A and 19(a) of the Act and Rule 17Ab2–1 (17 CFR 240.17Ab2–1 (1994)) thereunder for a period of three years. Securities Exchange Act Release No. 25740 (May 24, 1988), 53 FR 19639.

1995, GSCC filed with the commission an amended Form CA–1. The Commission published notice of GSCC's request in the **Federal Register** on April 24, 1995.[4] No comments were received. This order extends GSCC's temporary registration as a clearing agency through November 31, 1995.

GSCC provides automated clearance and settlement services to its members for their transactions in government securities.[5] One of the primary reasons for GSCC's registration was to provide comparison services for transactions in government securities. GSCC offers its members netting and comparison services including services for next-day settling trades, forward settling trades, auction takedown activity, the multilateral meeting of trades, the novation of netted trades, and the daily marking-to-the-market. In connection with GSCC's clearance and settlement services, GSCC provides a centralized loss allocation procedure and maintains margin to offset netting and settlement risks.

As a part of GSCC's request for full clearing agency registration, GSCC has requested that the Commission remove GSCC's exemption from the participation standards of Sections 17A(b)(3)(B) and 17A(b)(4)(B) of the Act.[6] The Commission recently has approved two proposed rule changes that increase the categories of those eligible for membership in GSCC's netting system,[7] as well as a proposed rule change which establishes minimum financial standards for insurance companies applying for GSCC membership.[8] In addition, GSCC has asserted that its current selection process for its board of directors, which permits any GSCC member to nominate candidates for election to the Board and to vote for candidates so nominated, assures fair representation.[9] GSCC further has stated that it recognizes future membership growth may require GSCC to adjust the selection process to ensure fair member representation on the Board.[10]

GSCC has made substantial progress toward satisfying the requirements enumerated in Section 17A(b) of the Act. However, the Commission believes that GSCC's exemptions from the participation standards set forth in Sections 17A(b)(3)(B) and 17A(b)(4)(B) of the Act should be continued at this time. Although GSCC has made advancements to encourage participation by the establishment of new membership categories, the Commission notes GSCC has had little practical experience with the utilization of the new categories. To date only two of these new categories for membership, the futures commission merchant and the Category 2 dealer netting member, have been employed, and within these categories only there new GSCC members have been added.[11] Furthermore, during the continued temporary approval period, GSCC will gain experience with its new procedures described above, and the Commission will be able to better evaluate GSCC's compliance with Section 17A of the Act.[12]

It is therefore ordered that GSCC's temporary registration as a clearing agency (File No. 600–23) be and hereby is extended through November 31, 1995 subject to the terms set forth above.

For the Commission by the Division of Market Regulation, pursuant to delegated authority.[13]

Jonathan G. Katz,

Secretary.

[FR Doc. 95–14001 Filed 6–7–95; 8:45 am]

BILLING CODE 8010–01–M

The Commission subsequently extended GSCC's registration until May 31, 1995. Securities Exchange Act Release Nos. 29067 (April 11, 1991), 56 FR 15652 and 32385 (June 3, 1993), 58 FR 32405.

[4] Securities Exchange Act Release No. 35618 (April 17, 1995), 60 FR 20131.

[5] ''Government securities'' means securities issued or guaranteed by the United States (''U.S.''), U.S. government agencies and instrumentalities, and U.S. government-sponsored corporations. 15 U.S.C. 3(a)(42) (1990).

[6] At the time of GSCC's initial registration, the Commission determined that GSCC's rules did not enumerate the statutory categories of membership as required by Section 17A(b)(3)(B) and the financial standards for applicants and members as contemplated by Section 17A(b)(4)(B) of the Act. 15 U.S.C. 78q–1(b)(3)(B), 78q–1(b)(4)(B) (1988). In addition, the Commission determined that while the composition of GSCC's Board of Directors reasonably reflected GSCC's anticipated initial membership, it would be appropriate to reevaluate whether GSCC's process for selecting its Board of Directors complied with the fair representation requirements in Section 17A(b)(3)(C) of the Act before granting full registration as a clearing agency. 15 U.S.C. 78q–1(b)(3)(C) (1988).

[7] Securities Exchange Act Release Nos. 34935 (November 3, 1994), 59 FR 56100 (order approving establishment of new categories of netting system membership for futures commission merchants) and 32722 (August 5, 1993), 58 FR 42993 (order approving establishment of new categories of netting system membership for dealer (''Category 2'') and interdealer brokers, issuers of government securities, insurance companies, registered clearing agencies, and registered insurance companies). A Category 2 dealer netting member has a lower net worth threshold but more stringent margin requirements than for other (''Category 1'') dealer netting members. Since establishment of the new membership categories, a futures commission merchant and two Category 2 dealers have been admitted to netting system membership under the new categories.

[8] Securities Exchange Act Release No. 35640 (April 24, 1995), 60 FR 21014 (order approving establishment of minimum financial requirements for insurance companies seeking GSCC membership).

[9] Registration Letter, *supra* note 3.

[10] *Id.*

[11] *Supra* note 7.

[12] The Commission also will continue GSCC's exemption from the fair representation standards for Section 17A(b)(3)(C) during the temporary registration period. Prior to granting permanent registration, the Commission will continue to evaluation GSCC's criteria for selecting its Board of Directors to ensure that the selection criteria is sufficiently flexible and assures adequate representation among GSCC's membership consistent with Section 17A(b)(3)(C) of the Act.

[13] 17 CFR 200.30–3(a)(50)(i) (1994).

SMALL BUSINESS ADMINISTRATION

Notice of Action Subject to Intergovernmental Review

AGENCY: Small Business Administration.

ACTION: Notice of action subject to Intergovernmental Review Under Executive Order 12372.

SUMMARY: This notice provides for public awareness of SBA's intention to refund twenty-three existing Small Business Development Centers (SBDCs) on October 1, 1995. Currently there are 56 SDBCs operating in the SDBC program. The following SDBCs are intended to be refunded, subject to the availability of funds: Alabama, Alaska, Connecticut, Delaware, Iowa, Kentucky, Louisiana, Maryland, Massachusetts, Michigan, Mississippi, Missouri, New York, Ohio, Puerto Rico, Dallas, Houston, Lubbock, San Antonio, Vermont, Virgin Islands, West Virginia, and Wyoming. This notice also provides a description of the SBDC program by setting forth a condensed version of the program announcement which has been furnished to each of the SBDCs to be refunded. This publication is being made to provide the State single points of contact, designated pursuant to Executive Order 12372, and other interested State and local entities, the opportunity to comment on the proposed refunding in accord with the Executive Order and SBA's regulations found at 13 CFR part 135.

EFFECTIVE DATE: September 6, 1995.

ADDRESSES: Comments should be addressed to Ms. Johnnie L. Albertson, Associate Administrator for SBDC Program, U.S. Small Business Administration, 409 Third Street, SW., Suite 4600, Washington, DC 20416.

FOR FURTHER INFORMATION CONTACT: Same as above.

Notice of Action Subject to Intergovernmental Review

SBA is bound by the provisions of Executive Order 12372, ''Intergovernmental Review of Federal

Programs.'' SBA has promulgated regulations spelling out its obligations under that Executive Order. See 13 CFR part 135, effective September 30, 1983.

In accord with these regulations, specifically 135.4, SBA is publishing this notice to provide public awareness of the pending application of twenty-three existing Small Business Development Centers (SBDCs) for refunding. Also, published herewith is an annotated program announcement describing the SBDC program in detail.

This notice is being published three months in advance of the expected date of refunding these SBDCs. Relevant information identifying these SBDCs and providing their mailing address is provided below. In addition to this publication, a copy of this notice is being simultaneously furnished to the affected State single point of contact which has been established under the Executive Order.

The State single point of contact and other interested State and local entities are expected to advise the relevant SBDC of their comments regarding the proposing refunding in writing as soon as possible. The SBDC proposal cannot be inconsistent with any area-wide plan providing assistance to small business, if there is one, which has been adopted by an agency recognized by the State government as authorized to do so. Copies of such written comments should also be furnished to Ms. Johnnie L. Albertson, Associate Administrator for SBDC Program, U.S. Small Business Administration, 409 Third Street, SW., Suite 4600, Washington, DC 20416. Comments will be accepted by the relevant SBDC and SBA for a period of 90 days from the date of publication of this notice. The relevant SBDC will make every effort to accommodate these comments during the 90–day period. If the comments cannot be accommodated by the relevant SBDC, SBA will, prior to refunding the SBDC, either attain accommodation of any comments or furnish an explanation of why accommodation cannot be attained to the commentor prior to refunding the SBDC.

Description of the SBDC Program

The SBDC operates under the general management and oversight of SBA, but with recognition that a partnership exists between the Agency and the SBDC for the delivery of assistance to the small business community. SBDC services shall be provided pursuant to a negotiated Cooperative Agreement with full participation of both parties.

SBDCs operate on the basis of a state plan to provide assistance within a state or designated geographical area. The initial plan must have the written approval of the Governor. As a condition to any financial award made to an applicant, non-Federal funds must be provided from sources other than the Federal Government. SBDCs operate under the provisions of Public Law 96–302, as amended by Public Law 98–395, a Notice of Award (Cooperative Agreement) issued by SBA, and the provisions of this Program Announcement.

Purpose and Scope

The SBDC Program is designed to provide quality assistance to small businesses in order to promote growth, expansion, innovation, increased productivity and management improvement. To accomplish these objectives, SBDCs link resources of the Federal, State, and local governments with the resources of the educational system and the private sector to meet the specialized and complex needs of the small business community. SBDCs also coordinate with other SBA programs of business development and utilize the expertise of these affiliated resources to expand services and avoid duplication of effort.

Program Objectives

The overall objective of the SBDC Program is to leverage Federal dollars and resources with those of the state, academic community and private sector to:

(a) Strengthen the small business community;

(b) Contribute to the economic growth of the communities served;

(c) Make assistance available to more small businesses than is now possible with present Federal resources;

(d) Create a broader based delivery system to the small business community.

SBDC Program Organization

SBDCs are organized to provide maximum services to the local small business community. The lead SBDC receives financial assistance from the SBA to operate a statewide SBDC Program. In states where more than one organization receives SBA financial assistance to operate an SBDC, each lead SBDC is responsible for Program operations throughout a specific regional area to be served by the SBDC. The lead SBDC is responsible for establishing a network of SBDC subcenters to offer service coverage to the small business community. The SBDC network is managed and directed by a full-time Director. SBDCs must ensure that at least 80 percent of Federal funds provided are used to provide services to small businesses. To the extent possible, SBDCs provide services by enlisting volunteer and other low cost resources on a statewide basis.

SBDC Services

The specific types of services to be offered are developed in coordination with the SBA district office which has jurisdiction over a given SBDC. SBDCs emphasize the provision of indepth, high-quality assistance to small business owners or prospective small business owners in complex areas that require specialized expertise. These areas may include, but are not limited to: management, marketing, financing, accounting, strategic planning, regulation and taxation, capital formation, procurement assistance, human resource management, production, operations, economic and business data analysis, engineering, technology transfer, innovation and research, new product development, product analysis, plant layout and design, agri-business, computer application, business law information, and referral (any legal services beyond basic legal information, and referral require the endorsement of the State Bar Association) exporting, office automation, site selection, or any other areas of assistance required to promote small business growth, expansion, and productivity within the State. The SBDC shall also ensure that a full range of business development and technical assistance services are made available to small businesses located in rural areas.

The degree to which SBDC resources are directed towards specific areas of assistance is determined by local community needs, SBA priorities and SBDC Program objectives and agreed upon by the SBA district office and the SBDC.

The SBDC must offer quality training to improve the skills and knowledge of existing and prospective small business owners. As a general guideline, SBDCs should emphasize the provisions of training in specialized areas other than basic small business management subjects. SBDCs should also emphasize training designed to reach particular audiences such as members of SBA priority and special emphasis groups.

SBDC Program Requirements

The SBDC is responsible to the SBA for ensuring that all programmatic and financial requirements imposed upon them by statute or agreement are met. The SBDC must assure that quality assistance and training in management and technical areas are provided to the State small business community through the State SBDC network. As a

condition of this agreement, the SBDC must perform, but not be limited to, the following activities:

(a) The SBDC ensures that services are provided as close as possible to small business population centers. This is accomplished through the establishment of SBDC subcenters.

(b) The SBDC ensures that lists of local and regional private consultants are maintained at the lead SBDC and each SBDC subcenter. The SBDC utilizes and provides compensation to qualified small business vendors such as private management consultants, private consulting engineers, and private testing laboratories.

(c) The SBDC is responsible for the development and expansion of resources within the State, particularly the development of new resources to assist small business that are not presently associated with the SBA district office.

(d) The SBDC ensures that working relationships and open communications exist within the financial and investment communities, and with legal associations, private consultants, as well as small business groups and associations to help address the needs of the small business community.

(e) The SBDC ensures that assistance is provided to SBA special emphasis groups throughout the SBDC network. This assistance shall be provided to veterans, women, exporters, the handicapped, and minorities as well as any other groups designated a priority by SBA. Services provided to special emphasis groups shall be performed as part of the Cooperative Agreement.

Advance Understandings

The Lead SBDC and all SBDC subcenters shall operate on a forty (40) hour week basis, or during the normal business hours of the State or Host Organization, throughout the calendar year. The amount of time allowed the Lead SBDC and subcenters for staff vacations and holidays shall conform to the policy of the Host organization.

Date: May 19, 1995.

Philip Lader,

Administrator.

Addresses of Relevant SBDC State Directors

Mr. Robert McKinley, Region Director, Univ. of Texas at San Antonio, 1222 North Main Street, San Antonio, TX 78212, (210) 558–2450

Mr. John P. O'Connor, State Director, University of Connecticut, Box U–41, Room 422, Storrs, CT 06269–2041, (203) 468–4135

Mr. Ronald Manning, State Director, Iowa State University, 137 Lynn Avenue, Ames, IA 50010, (515) 292–6351

Ms. Liz Klimback, Region Director, Dallas Community College, 1402 Corinth Street, Dallas, TX 75212, (214) 565–5833

Mr. John Ciccarelli, State Director, University of Massachusetts, School of Management, Amherst, MA 01003, (413) 545–6301

Mr.Raleigh Byars, State Director, University of Mississippi, Old Chemistry Building, University, MS 38677, (601) 232–5001

Mr. James L. King, State Director, State University of New York, SUNY Plaza, S–523, Albany, NY 12246, (518) 443–5398

Dr. Elizabeth Gatewood, Region Director, University of Houston, 1100 Louisiana, Suite 500, Houston, TX 77002, (713) 752–8444

Mr. Donald L. Kelpinski, State Director, Vermont Technical College, P.O. Box 422, Randolph Center, VT 05060, (802) 728–9101

Ms. Hazel Kroesser, State Director, Governor's Office of Community and Industrial Development, 950 Kanawha Boulevard, East, Charleston, WV 25301, (304) 558–2960

Ms. Mariluz Frontera, Acting Director, University of Puerto Rico, Box 5253—College Station, Mayaguez, PR 00681, (809) 834–3590

Mr. Clinton Tymes, State Director, University of Delaware, Suite 005–Purnell Hall, Newark, DE 19711, (302) 831–2747

Ms. Janet Holloway, State Director, University of Kentucky, 225 Business & Economics Bldg., Lexington, KY 40506–0034, (606) 257–7668

Mr. Thomas McLamore, State Director, Department of Economic and Employment Development, 217 East Redwood St., 9th Floor, Baltimore, MD 21202, (410) 333–6995

Mr. Ron Hall, State Director, Wayne State University, 2727 Second Avenue, Detroit, MI 48201, (313) 964–1798

Mr. Max Summers, State Director, University of Missouri, Suite 300, University Place, Columbia, MO 65211, (314) 882–0344

Ms. Holly Schick, State Director, Ohio Department of Development, 77 South High Street, Columbus, OH 43226–1001, (614) 466–2711

Mr. Craig Bean, State Director, Texas Tech University, 2579 South Loop 289, Suite 114, Lubbock, TX 79423–1637, (806) 745–3973

Mr. Chester Williams, Director, University of the Virgin Islands, 8000 Nisky Center, Suite 202, St. Thomas, US V. Islands 00802, (809) 776–3206

Mr. David Mosely, State Director, University of Wyoming, College of Business, Laramie, WY 82071–3275, (307) 766–3505

[FR Doc. 95–14076 Filed 6–7–95; 8:45 am]

BILLING CODE 8025–01–M

DEPARTMENT OF STATE

Office of the Secretary

[Public Notice 2219]

New International Railroad Bridge, Laredo, Texas: Issuance of Presidential Permit

SUMMARY: The Department of State is announcing the issuance to the Union Pacific Railroad/Missouri Pacific Railroad Company of a Presidential Permit for a new international railroad bridge between Laredo, Texas, and Nuevo Laredo, Tamaulipas, Mexico. The Permit was issued on May 11, 1995, pursuant to the International Bridge Act of 1972 (33 U.S.C. 535 *et seq.*) and E.O. 11423, 33 FR 11741 (1968) as amended by E.O. 12847, 58 FR 29511 (1993).

ADDRESSES: Copies of the Presidential Permit may be obtained from Stephen R. Gibson, Coordinator, U.S.-Mexico Border Affairs, Office of Mexican Affairs, room 4258, Department of State, Washington, D.C. 20520 (Telephone 202–647–8529).

SUPPLEMENTARY INFORMATION: Notice of the application by the Union Pacific Railroad for a permit to build a new international railroad bridge across the Rio Grande between Laredo, Texas, and Nuevo Laredo, Tamaulipas, Mexico was published in the **Federal Register** on April 7, 1994, at 59 FR 16682. The new railroad bridge will be located 6.5 miles northwest of the existing international railroad crossing at Laredo. The project will involve approximately 1.7 miles of new track on the United States side of the Rio Grande, the construction of a 1,169-foot bridge spanning the river and 8.95 miles of new track in Mexico. The number of rail cars using the present downtown bridge increased from 50,000 in 1989 to 100,000 in 1993. It is expected that the new bridge will eliminate about 90 percent of Union Pacific rail traffic from downtown Laredo, reduce inconvenience to the public due to blocked crossings, and allow for anticipated future rail traffic growth generated by the North American Free Trade Agreement (NAFTA). The application for the Presidential Permit was reviewed and approved by over 20 federal and state agencies.

Date: June 2, 1995.

Stephen R. Gibson,

Coordinator, U.S.-Mexico Border Affairs, Office of Mexican Affairs.

[FR Doc. 95–14000 Filed 6–7–95; 8:45 am]

BILLING CODE 4710–29–P

[Public Notice 2218]

New International Railroad Bridge, Laredo, Texas: Finding of No Significant Impact

SUMMARY: The Department of State is issuing a finding of no significant impact on the environment for the new international railroad bridge project sponsored by the Union Pacific Railroad/Missouri Pacific Railroad Company. A draft environmental assessment of the proposed Laredo international railroad bridge project was prepared by HDR Engineering, Inc. of Omaha, Nebraska for the Presidential Permit applicant, Union Pacific Railroad/Missouri Pacific Railroad Company (Union Pacific Railroad Company), under the guidance and supervision of the Department of State. A Public Notice regarding the availability for inspection of the Union Pacific Railroad Company's Permit application and the draft environmental assessment was published in the **Federal Register** on April 7, 1994, at 59 FR 16682. No comments were received from the public.

Over 20 federal and state agencies reviewed the draft environmental assessment. All comments received from these agencies were responded to, either by expanding the analysis contained in the draft environmental assessment or by proposing mitigation measures, as appropriate. Additionally, the Permit applicant corresponded and met with several agencies to discuss ways of meeting their concerns and, where appropriate, to discuss mitigation measures. The outcome of this dialogue was recorded in correspondence. Agencies participating in this process were the Immigration and Naturalization Service, Customs Service, Food and Drug Administration, Animal and Plant Health Inspection Service, General Services Administration, International Boundary and Water Commission—U.S. Section, Department of Defense, Department of Transportation, Coast Guard, Federal Highway Administration, Federal Railroad Administration, Interstate Commerce Commission, Federal Emergency Management Agency, Department of the Interior, Department of Commerce, Environmental Protection Agency, Department of State, and the appropriate Texas State agencies—Parks and Wildlife Department, Department of Transportation, Historical Commission, Railroad Commission, South Texas Development Council and Natural Resource Conservation Commission. The draft environmental assessment, the comments submitted by the agencies, the response to these comments, and all correspondence between the agencies and the Permit applicant addressing the agencies' concerns, together, constitute the final environmental assessment.

Based on the final environmental assessment and information developed during the review of the Company's application and of the draft environmental assessment, the Department has concluded that issuance of the Permit will not have a significant impact on the quality of the human environment within the United States. In accordance with Council on Environmental Quality Regulations, 40 CFR 1501.4 and 1508.13, and with State Department Regulations, 22 CFR 161.8(c), an environmental impact statement will therefore not be prepared.

A Finding of No Significant Impact was adopted on May 5, 1995.

ADDRESSES: Copies of the Finding of No Significant Impact may be obtained from Stephen R. Gibson, Coordinator, U.S.-Mexico Border Affairs, Office of Mexican Affairs, Room 4258, Department of State, Washington, DC 20520 (Telephone 202–647–8529).

SUPPLEMENTARY INFORMATION: The Department of State is charged with issuance of Presidential Permits for the construction of international bridges under the International Bridge Act of 1972, 86 Stat. 731; 33 U.S.C. 535 *et seq.*, and Executive Order 11423, 33 FR 11741 (1968), as amended by Executive Order 12847 of May 17, 1993, 58 FR 29511 (1993).

Union Pacific Railroad Company, Texas, requested from the Department of State a Permit to build a new railroad bridge between Laredo, Texas, and Nuevo Laredo, Tamaulipas, Mexico, a project which will include the construction of rail lines in both countries to connect the new bridge to existing mainline tracks. The proposed railroad bridge will be located 6.5 miles northwest of the existing international railroad bridge crossing at Laredo, at about mile 367.97 on the Rio Grande. The work involves the construction of approximately 1.7 miles of new track on the United States side; the construction of a 1,169-foot bridge spanning the Rio Grande and the border; and the construction of 8.95 miles of new track in Mexico. It is expected that the new rail bridge will:

- Eliminate about 90 percent of Union Pacific rail traffic from downtown Laredo;
- Reduce inconvenience to the public due to blocked crossings; and
- Allow for anticipated future rail traffic growth generated by the North American Free Trade Agreement (NAFTA).

Earthwork and grading for the project will be designed and constructed to permit the operation of a double mainline track. However, the second mainline will be constructed in the future as demand increases. The proposed rail corridor will be between 200 and 400 feet wide, with the additional width required for construction of the curved transition into the existing tracks.

The corridor will traverse undeveloped land and will not require purchase or relocation of any homes or businesses.

Dated: June 2, 1995.

Stephen R. Gibson,

Coordinator, U.S.-Mexico Border Affairs, Office of Mexican Affairs.

[FR Doc. 95–13999 Filed 6–7–95; 8:45 am]

BILLING CODE 4710–29–P

[Public Notice 2221]

Overseas Schools Advisory Council; Notice of Re-Scheduling of Meeting

The Annual Meeting of the Overseas Schools Advisory Council of the Department of State has been re-scheduled for Thursday, July 20, 1995 in room 6320, Department of State, 2201 C Street NW., Washington, D.C.at 9:30 a.m. For details of the meeting please refer to the announcement which appeared in the Federal Register, Public Notice 2185, published on Thursday, April 6, 1995, Volume 60, Number 66.

If you need further information, please contact the office of Dr. Ernest N. Mannino, Department of State, Office of Overseas Schools, SA–29, Room 245, Washington, D.C. 20522–2902, telephone 703–875–7800.

Dated: June 5, 1995.

Ernest N. Mannino,

Executive Secretary, Overseas Schools Advisory Council.

[FR Doc. 95–14092 Filed 6–7–95; 8:45 am]

BILLING CODE 4710–24–M

DEPARTMENT OF TRANSPORTATION

Federal Aviation Administration

Approval of Noise Compatibility Program; Palm Beach International Airport, West Palm Beach, Florida

AGENCY: Federal Aviation Administration, DOT.

ACTION: Notice.

SUMMARY: The Federal Aviation Administration (FAA) announces its findings on the noise compatibility program submitted by Palm Beach County under the provisions of Title I of the Aviation Safety and Noise Abatement Act of 1979 (Public Law 96–193) and 14 CFR Part 150. These findings are made in recognition of the description of Federal and nonfederal responsibilities in Senate Report No. 96–52 (1980). On February 1, 1993, the FAA determined that the noise exposure maps submitted by Palm Beach County under Part 150 were in compliance with applicable requirements. On November 18, 1994, the FAA determined that the revised future noise exposure map was in compliance with applicable requirements. On may 17, 1995, the Administrator approved the Palm Beach International Airport noise compatibility program. Twenty-four (24) recommendations of the program were approved and one (1) recommendation was partially approved.

EFFECTIVE DATE: The effective date of the FAA's approval of the Palm Beach International Airport noise compatibility program is May 17, 1995.

FOR FURTHER INFORMATION CONTACT: Tommy J. Pickering, P.E., Federal Aviation Administration, Orlando Airports District Office, 9677 Tradeport Drive, Suite 130, Orlando, Florida 32827–3596, (407) 648–6583. Documents reflecting this FAA action may be reviewed at this same location.

SUPPLEMENTARY INFORMATION: This notice announces that the FAA has given its overall approval to the noise compatibility program for the Palm Beach International Airport, effective May 17, 1995.

Under Section 104(a) of the Aviation Safety and Noise Abatement Act (ASNA) of 1979 (hereinafter referred to as ''the Act''), an airport operator who has previously submitted a noise exposure map may submit to the FAA a noise compatibility program which sets forth the measures taken or proposed by the airport operator for the reduction of existing noncompatible land uses and prevention of additional noncompatible land uses within the area covered by the noise exposure maps. The Act requires such programs to be developed in consultation with interested and affected parties including local communities, government agencies, airport users, and FAA personnel.

Each airport noise compatibility program developed in accordance with Federal Aviation Regulations (FAR) Part 150 is a local program, not a Federal program. The FAA does not substitute its judgment for that of the airport proprietor with respect to which measure should be recommended for action. The FAA's approval or disapproval of FAR Part 150 program recommendations is measured according to the standards expressed in Part 150 and the Act, and is limited to the following determinations:.

a. The noise compatibility program was developed in accordance with the provisions and procedures of FAR Part 150;

b. Program measures are reasonably consistent with achieving the goals of reducing existing noncompatible land uses around the airport and preventing the introduction of additional noncompatible land uses;

c. Program measures would not create an undue burden on interstate or foreign commerce, unjustly discriminate against types of classes of aeronautical users, violate the terms of airport grant agreements, or intrude into areas preempted by the Federal Government; and

d. Program measures relating to the use of flight procedures can be implemented within the period covered by the program without derogating safety, adversely affecting the efficient use and management of the navigable airspace and air traffic control systems, or adversely affecting other powers and responsibilities of the Administrator prescribed by law.

Specific limitations with respect to FAA's approval of an airport noise compatibility program are delineated in FAR Part 150, Section 150.5. Approval is not a determination concerning the acceptability of land uses under Federal, state, or local law. Approval does not by itself constitute an FAA implementing action. A request for Federal action or approval to implement specific noise compatibility measures may be required, and an FAA decision on the request may require an environmental assessment of the proposed action. Approval does not constitute a commitment by the FAA to financially assist in the implementation of the program nor a determination that all measures covered by the program are eligible for grant-in-aid funding from the FAA. Where Federal funding is sought, requests for project grants must be submitted to the FAA Airports District Office in Orlando, Florida.

Palm Beach County submitted to the FAA on January 29, 1993, the noise exposure maps, descriptions, and other documentation produced during the noise compatibility planning study conducted from March 21, 1991, through October 4, 1994. The Palm Beach International Airport noise exposure maps were determined by FAA to be in compliance with applicable requirements on February 1, 1993. A revised future noise exposure map was submitted to the FAA on October 6, 1994. The revised future noise exposure map was determined by FAA to be in compliance with applicable requirements on November 18, 1994. Notice of these determinations was published in the **Federal Register.**

The Palm Beach International Airport study contains a proposed noise compatibility program comprised of actions designed for phased implementation by airport management and adjacent jurisdictions from the date of study completion to the year 1998. It was requested that FAA evaluate and approve this material as a noise compatibility program as described in Section 104(b) of the Act. The FAA began its review of the program on November 19, 1994, and was required by a provision of the Act to approve or disapprove the program within 180 days (other than the use of new flight procedures for noise control). Failure to approve or disapprove such program within the 180-day period shall be deemed to be approval of such program.

The submitted program contained twenty-five (25) proposed actions for noise mitigation on and off the airport. The FAA completed its review and determined that the procedural and substantive requirements of the Act and FAR Part 150 have been satisfied. The overall program, therefore, was approved by the Administrator effective May 17, 1995.

Outright approval was granted for twenty-four (24) of the specific program elements. One (1) program element for local environmental review was partially approved. Measures pertaining to FAR Part 77 height criteria associated with Part 77 height/hazard zoning was disapproved. The approval action was for the following program elements:

Measure and description	NCP pages
Operational Elements:	
1. Noise Abatement Flight Paths for Turbojet Aircraft. Runways 27R, 13 and 31: Eliminate multiple noise abatement flight paths from these runways. All departing aircraft shall be assigned runway heading or corresponding wind correlated heading, regardless of Part 36 Stage. Runway 9L: Continue the use of multiple departure flight paths but eliminate the north turn departure track (075 heading) at the point in time at which the elimination of the northern track would not increase the cumulative noise level at any residential noise-sensitive area within the 65 dB DNL contour by 1.5 dB or greater. After the north departure path is eliminated, all aircraft shall be assigned runway heading, or corresponding wind corrected heading regardless of Part 36 Stage. The flight track improvements reduce the population within the [DNL 65 dB] noise contours by approximately 13%, from 9,889 to 8,636. FAA Action: Approved as a voluntary measure, wind weather and traffic permitting. The airport operator intends to prepare annual DNL contours (Measure 17, below), which will assist in carrying out the recommendations for Runway 9L. In response to the FAA's notice about the PBIA Part 150 NCP, the FAA received 59 comments, 54 of which were from residents of communities east of the airport (Runway 9 end) and supported continuation of multiple flight tracks. The NCP and a February 15, 1995, letter from the airport sponsor indicate that the Part 150 Technical Advisory Committee (TAC) carefully considered the alternative of continued use of multiple flight tracks. The TAC included, among others, voting representatives from the Town of Haverhill, the City of West Palm Beach, the Town of Palm Beach, the Citizens Committee on Aircraft Noise, the Old El Cid Noise Reduction Committee, and counsel for the residents who sued the airport in 1989. The alternative selected was considered a compromise because only some neighborhoods to the east supported continuation or increase of fanning, while the City of West Palm Beach Commission, by Resolution, and the majority within West Palm Beach supported total elimination of fanning. The majority of the population within the five-year DNL 65 dB contour reside in West Palm Beach.	NCP, pages 31–34, Tables 2.2 (page 15) and 3.2 (page 61); PBIA Noise Abatement Bulletin.
2. Preferential Runway Use Program. Corporate jet departures will be assigned Runway 31 when in the west flow. During the hours of 10 p.m. to 10 a.m. (off peak), Runway 27R will be the preferred runway, when safety and weather permit; it also will be the preferred calm wind runway during this period. During the hours of 10 a.m. to 10 p.m. (peak traffic period), runway 9L will be the preferred and designated calm wind runway. FAA Action: Approved as a voluntary measure.	NCP, pages 35–36, Tables 2.2 and 3.1; PBIA Noise Abatement Bulletin; Appendix Volume, Table 1, TAC Meeting #9, page 4.
3. Noise Abatement Departure Procedures. The Department of Airports (DOA) is in the process of analyzing the two Noise Abatement Departure Procedures (NADP) alternatives from the revised AC 91–53A. Based on the results of that analysis, the DOA will work with the Citizen's Committee on Aircraft Noise (CCAN) to select a procedure (or procedures, if the FAA permits) for implementation at the airport. The DOA will provide test results and final recommendations to the FAA at the earliest possible date, including an evaluation of any effect on the Noise Exposure Maps (NEM). FAA Action: Approved as a voluntary measure. Analysis of NADP alternatives for air carriers greater than 75,000 pounds (mgtw) is approved FOR STUDY ONLY. The airport operator may submit supplemental information, including the noise benefits, upon completion of its study and may request approval under Part 150 of specific departure procedure(s) to be used for large aircraft.	NCP, pages 36–38, and Tables 2.2 and 3.1; PBIA Noise Abatement Bulletin, FAA Advisory Circular 91–53A, and letters dated 1/12/95 and 3/14/95 from PBIA.
4. Maintenance Runup Procedures. No procedural changes are necessary for maintenance runups except that a revised runup request form should be implemented for better record-keeping. FAA Action: Approved.	NCP, pages 38–39, Figures 2.4, and Tables 2.2 and 3.1; PBIA Noise Abatement Bulletin; Appendix Volume, Section 1 of Appendix A.2, Section 2.7 of Appendix I.2.
Land Use Elements: A combination of strategies in areas within the five year forecast 65 dB LDN contours and neighboring ''buffer zones'' for implementation were identified as being the most appropriate for inclusion in the revised NCP.	
5. Sound Insulation. The ongoing program proposed for the revised NCP will have three main phases: Development of sound insulation program; validation of the sound insulation; and procedures for program implementation. Modifications may be made based on the technical assistance of the demonstration program. Any modifications will be based on DOT/FAA/PP–92–5 ''Guidelines for the Sound Insulation of Residences Exposed to Aircraft Operations.'' After the DOA assesses the success of the demonstration program and the potential for the development of a large-scale sound insulation program, prospective participates will be notified. The DOA will follow FAA guidelines by encouraging and possibly requiring participating homeowners to grant an aviation easement in exchange for sound insulation modifications. The DOA will enter into a Homeowner Participation Agreement with interested residents and implement the program as funding becomes available. Four non-residential noise sensitive sites within the revised 5-year NEM will also be offered the opportunity to participate. The same guidelines will apply to these non-residential sites. FAA Action: Approved.	NCP, pages 41 and 42, Tables 2.2 and 3.1; and Appendix J.2.
6. Easement Acquisition. The previous Noise Abatement and Mitigation Study (NAMS) recommended the use of avigation easements as a remedial land use strategy. The DOA has, on an on-going basis, acquired avigation easements. However, the easement acquisitions have not been part of a formal program. As a recommended measure of the revised NCP, the easement acquisition program will be implemented on a formal basis. Similar to the sound insulation program, the DOA will enter into an easement acquisition agreement and implement the program as funding becomes available. FAA Action: Approved.	NCP, page 42, Figure 2.5, and Tables 2.2 and 3.1.

Measure and description	NCP pages
7. Transaction Assistance. Transaction assistance was recommended in the previous NCP; however, this measure was never implemented. The measure relates to assurances by the DOA that a homeowner, within the noise exposure area, will receive assistance in the sale of affected structures. In exchange, the homeowner would grant to the DOA an avigation easement. The form of the assistance will be agreed to by the homeowner and the DOA and will be determined for specific structures on an individual basis. Homeowners' participation is voluntary. The DOA will publicize this program and contact homeowners who may be eligible for participation. FAA Action: Approved. This measure is subject to an evaluation at the time of implementation with respect to Airport Improvement Program (AIP) eligibility because some elements of the proposed transaction assistance program may be ineligible for Federal funding.	NCP, page 42, Figure 2.6, and Tables 2.2 and 3.1.
8. Land Acquisition and Relocation. The three previously described remedial land use measures (sound insulation, easement acquisition, and transaction assistance) are the primary remedial measures. If an individual or group of property/home owner(s) and the DOA determine that the implementation of any of the previous remedial measures are inadequate, then land acquisition and relocation will be considered. The DOA will follow all FAA noise land grant provisions for the purchase and disposal of property purchased under this program. FAA Action: Approved.	NCP, pages 45–46, and Tables 2.2 and 3.1.
9. Comprehensive Planning: Local comprehensive plans presently reflect other impacts. Aircraft noise should also be considered. It is recommended that local governments be strongly encouraged to amend their plans through plan amendments. In order to implement this measure successfully, the DOA will coordinate with each jurisdiction as to the timing and content of plan amendments. FAA Action: Approved.	NCP, page 47, and Tables 2.2 and 3.1.
10. Zoning. The previous noise study recommended zoning be addressed through the land development regulations. Draft text amendments have been developed which address the conversion of incompatibility zoned land to compatibly zoned. The DOA is working with the Palm Beach County Planning, Building, and Zoning Departments on strengthening the ordinance. It is a recommendation that the ordinance include: specific reference to the NEMs and the affected areas (including references to the current annual maps within the body of the ordinance), a change in the use regulation table to include a noise/land use compatibility determination, specific prohibition on zoning approval for noise sensitive sites within the designated noise affected areas. FAA Action: Approved.	NCP, page 47, Appendix J.2, and Tables 2.2 and 3.1.
11. Local Environmental Review. A formal local environmental review program should be established, with thresholds or mechanisms to trigger a local environmental review of proposed development if it lies within the environs surrounding PBIA. The following measures are recommended: designation of a governmental/airport liaison staff position to address, among other issues, airport/community development issues; environmental review of new development shall include zoning review, building structure and content, height review using FAR Part 77 criteria and local land use regulations, noise/land use compatibility based on FAR Part 150 guidelines and, when approved, the Palm Beach County airport land use compatibility zoning ordinance; and formal coordination meetings between the liaison and other local government staff be held on a monthly basis. FAA Action: Approved except for measures pertaining to FAR Part 77 height criteria, which is disapproved for purposes of Part 150. Part 77 height/hazard zoning is not a noise mitigation measure and is not approvable under Part 150. The airport operator is encouraged to incorporate Part 77 into its overall environmental review process.	NCP, pages 48 and Tables 2.2 and 3.1.
12. Real Estate Disclosure. This measure involves disclosure to a potential property/homeowner of a property's location relative to noise exposure contours of PBIA. A real estate disclosure program addressing the following is recommended: Make the revised NEMs and NCP matters of public record; update the public record of the NEMs and NCP annually; provide all officially listed realtors in Palm Beach County with information detailing noise contours every six months; and include a noise notice in the public record and real estate information. Guidelines of the Florida DOT and Real Estate Code, agents are obligated to inform prospective buyers of any known or potential issues of which they are aware. The burden of notification is shifted from the DOA to the real estate agents. FAA Action: Approved.	NCP, pages 48–49 and Tables 2.2 and 3.1.
13. Building Code Revision. This measure references the revision of the local building codes (Southern Standard) to require that proper noise insulating materials are used in new construction or re-development. This measure was recommended in the original NCP and is included as a recommendation of the Revised NCP. The April 1987 PBIA Noise Abatement and Mitigation Study (NAMS) provided detailed information on how the codes should be revised, in section 5 of the document. The information contained in that report is still valid and is reprinted in Appendix J.2. DOT/FAA document PP–92–5, ''Guidelines for the Sound Insulation of Residences Exposed to Aircraft Operations'' will be made available at all local government building departments. FAA Action: Approved.	NCP, page 49, Tables 2.2 and 3.1, Appendix J.2.
14. Easement Acquisition—Undeveloped Land. This measure involves acquisition of avigation easements for undeveloped parcels within and in close proximity to the DNL 65 and DNL 70 noise contours as added protection from noncompatible future development. The DOA, through local government/airport liaison, will identify all undeveloped parcels. Based on the level of success of the other preventive measures, for those parcels that may still be zoned to allow incompatible development, the DOA will contact the property owners regarding the acquisition of an avigation easement from the undeveloped parcel's property rights. FAA Action: Approved. The airport operator intends to purchase an easement to prevent noncompatible development.	NCP, page 49, Figure 2.5, and Tables 2.2 and 3.1.

Measure and description	NCP pages
15. Land Acquisition—Undeveloped Land. In some instances, none of the recommended preventive land use strategies would prevent an undeveloped parcel from being developed incompatibly. In those instances, the DOA may consider acquiring the property. The use of the local environmental review measure [Measure 11 in this Record of Approval] will provide notification to the DOA of such instances. The implementation process will follow the same procedures as those for developed land [Measure 8 in this ROA]. FAA Action: Approved. This measure is subject to an evaluation at the time of implementation that the property is within the DNL 65 dB contour, and to a determination that the undeveloped property either has been zoned incompatibly or is in imminent danger of being developed incompatibly unless it is acquired by the airport operator.	NCP, page 49, Tables 2.2 and 3.1.
Implementation, Monitoring, and Review Actions:	
16. Noise and Operations Monitoring System. The DOA will acquire and install a noise and operations monitoring system to support implementation, monitoring, and review of other NCP elements. The major components of the system will be flight track monitoring, aircraft performance monitoring, noise monitoring, user interface & database management, meteorological monitoring, audio & tower radio monitoring & recording capabilities, and aircraft & flight identification components. FAA Action: Approved.	NCP, page 50 and Tables 2.2 and 3.1.
17. Prepare Annual L_{dn} Contours. The DOA Noise Office will continue to develop annual L_{dn} contours to meet a PBIA commitment to an ongoing annual review of the noise contours. FAA Action: Approved..	NCP, page 50 and Tables 2.2 and 3.1.
18. Annual Review of Magnetic Headings. It is recommended that the FAA Air Traffic Control Tower, with DOA assistance, review the magnetic headings annually and revise the departure instructions to pilots to reflect changes in the magnetic heading of the airport's runways. FAA Action: Approved.	NCP, page 51 and Tables 2.2 and 3.1.
19. NEM/NCP Review, At a minimum, the NCP should call for updating the NEM at the end of the five year forecast period. If traffic levels either exceed the forecast levels by 15% or drop below the current level by 15% the DOA should review the NEM. In addition, should the annual contours show a significant difference between the annual contours and the approved NEM contours, the DOA should consider more in-depth noise analysis and potential revision of the NCP and NEM. A significant change is defined as an area of non-compatible land use within the 65 dB LDN contour where the annual contour exceeds the relevant NEM contour set by 1.5 decibels or greater. When PBIA has a 100 percent Stage 3 airline fleet, it would be appropriate to review the NEM and NCP. FAA Action: Approved.	NCP, page 51 and Tables 2.2 and 3.1.
20. Runway 27R ILS. The DOA is moving ahead with plans to install an Instrument Landing System (ILS) on Runway 27R. This ILS will greatly improve adherece to the preferred arrival track for that runway. This measure was a recommended action of the previous NCP. FAA Action: Approved.	NCP, page 51 and Tables 2.2 and 3.1.
21. Program Publicity: Pilot Handout. Figure 2.8 presents a draft recommended pilot handout. The pilot handout would provide information on various noise abatement policies, including: detailed description of noise abatement flight paths; requested use of FAA AC 91–53 procedures and Teteboro noise abatement departure procedures; preferential runway use program; and ground runup procedures. The DOA will distribute the bulletin. Copies also would be posted. The ''Teterboro procedure'' is similar to National Business Aircraft Association's (NBAA) departure procedures for aircraft weighing less than 75,000 pounds. The airport operator has stated that: (1) this is an existing NADP that is recommended as a first preference for those pilots who are familiar with the procedure and (2) the NBAA procedure is recommended for other pilots (page 38 of the NCP) and (3) pilots groups have reviewed the procedures (Air Line Pilots Association, Aircraft Owners and Pilots Association, and NBAA) (March 14, 1995, letter from PBIA). FAA Action: Approved. The most current version of the above-referenced FAA AC is 91–53A and should be appropriately referenced. The pilot handout should reflect the voluntary nature of the flight procedures, as indicated under the appropriate sections in this ROA (Measures 1, 2, and 3).	NCP, page 51, Figure 2.8, and Tables 2.2 and 3.1; PBIA Noise Abatement Bulletin; March 14, 1995, letter from PBIA.
22. Revise FAA Tower Order. Changes to the preferential runway use and multiple noise abatement departure flight track assignment elements in the PBIA Noise Compatibility Program will necessitate changes to FAA Order 8400.9. FAA Action: Approved. These procedures have been approved as voluntary measures in this ROA (Measures 2 and 3). The FAA by formal order under 49 USC 40103 would implement these measures, which would also be subject to applicable environmental requirements prior to implementation.	NCP, page 54, Figure 2.9, and Tables 2.2 and 3.1.
23. Program Publicity: National Publications. There are a number of nationally recognized publications that provide pilots with information on airport operating procedures. The DOA will request that these publications include appropriate summaries of the PBIA noise abatement procedures. FAA Action: Approved.	NCP, page 54 and Tables 2.2 and 3.1.
24. Public Participation: Ongoing Citizens Meetings. The DOA will continue to meet on a routine basis with the CCAN or a similar group to continue promotion of public participation and to review ongoing noise abatement measures and the implementation of the recommendations of this study. FAA Action: Approved.	NCP, page 54 and Tables 2.2 and 3.1.
25. Program Publicity: AIRWAVES Newsletter. The DOA will continue to publish newsletters at regular intervals to update residents and other interested parties of the status of PBIA's noise abatement program. FAA Action: Approved.	NCP, page 54 and Tables 2.2 and 3.1.

These determinations are set forth in detail in a Record of Approval endorsed by the Administrator on May 17, 1995. The Record of Approval, as well as other evaluation materials and the documents comprising the submittal, are available for review at the FAA office listed above and at the administrative offices of Palm Beach County.

Issued in Orlando, Florida, on May 23, 1995.

Charles E. Blair,

Manager, Orlando Airports District Office.

[FR Doc. 95–13941 Filed 6–7–95; 8:45 am]

BILLING CODE 4910–13–M

Sunshine Act Meetings

Federal Register
Vol. 60, No. 110
Thursday, June 8, 1995

This section of the FEDERAL REGISTER contains notices of meetings published under the "Government in the Sunshine Act" (Pub. L. 94-409) 5 U.S.C. 552b(e)(3).

FEDERAL ELECTION COMMISSION

DATE AND TIME: Tuesday, June 13, 1995 at 10 a.m.

PLACE: 999 E Street, NW., Washington, DC.

STATUS: This meeting will be closed to the public.

ITEMS TO BE DISCUSSED:

Compliance matters pursuant to 2 U.S.C. § 437g.

Audits conducted pursuant to 2 U.S.C. § 437g, § 438(b), and Title 26, U.S.C.

Matters concerning participation in civil actions or proceedings or arbitration.

Internal personnel rules and procedures or matters affecting a particular employee.

DATE AND TIME: Thursday, June 15, 1995 at 2 p.m.

PLACE: 999 E Street, NW., Washington, DC (Ninth Floor).

STATUS: This meeting will be open to the public.

ITEMS TO BE DISCUSSED:

Correction and Approval of Minutes.

Advisory Opinion 1995–14: Colleen M. Nolan on behalf of Oral and Maxillofacial Surgery PAC ("OMSPAC").

Advisory Opinion 1995–15: Beth Taylor (AllisonPAC) Allison Engine Company.

Regulations:

MCFL Rulemaking: Explanation and Justification for Express Advocacy Definition and Qualified Nonprofit Corporation Regulations.

Administrative Matters.

PERSON TO CONTACT FOR INFORMATION: Mr. Ron Harris, Press Officer, Telephone: (202) 219–4155.

Delores Hardy,

Administrative Assistant.

[FR Doc. 95–14225 Filed 6–6–95; 3:01 pm]

BILLING CODE 6715–01–M

FEDERAL MINE SAFETY AND HEALTH REVIEW COMMISSION

TIME AND DATE: 10:00 a.m., Thursday, June 8, 1995.

PLACE: Room 600, 6th Floor, 1730 K Street, N.W., Washington, D.C.

STATUS: Open.

MATTERS TO BE CONSIDERED: The Commission will consider and act upon the following:

1. *Peabody Coal Co.*, Docket Nos. KENT 93–318–R, etc. (Issues include whether the judge erred in finding that Peabody's violations of 30 C.F.R. § 70.100(a) were caused by its high negligence and unwarrantable failure to comply with the standard.)

2. *Jim Walter Resources, Inc.*, Docket No. SE 94–244–R (Issues include whether the judge erred in failing to find that the violation of 30 C.F.R. § 75.400 was significant and substantial, and caused by JWR's unwarrantable failure to comply with the standard.)

Any person attending this meeting who requires special accessibility features and/or auxiliary aids, such as sign language interpreters, must inform the Commission in advance of those needs. Subject to 29 CFR 2706.150(a)(3) and 2706.160(e).

CONTACT PERSON FOR MORE INFORMATION: Jean Ellen (202) 653–5629/for toll free TDD Relay 1–800–877–8339.

Jean H. Ellen,

Chief Docket Clerk.

[FR Doc. 95–14151 Filed 6–6–95; 2:59 pm]

BILLING CODE 6735–01–M

UNITED STATES INTERNATIONAL TRADE COMMISSION

TIME AND DATE: June 22, 1995 at 2:30 p.m.

PLACE: Room 101, 500 E Street S.W., Washington, DC 20436.

STATUS: Open to the public.

MATTERS TO BE CONSIDERED:

1. Agenda for future meeting
2. Minutes
3. Ratification List
4. Inv. No. 731–TA–702 (Final) (Ferrovanadium and Nitrided Vanadium from Russia)—briefing and vote.
5. Outstanding action jackets:
   1. GC–95–033, Failure to serve documents in an investigation under Title VII of the Tariff Act of 1930.

In accordance with Commission policy, subject matter listed above, not disposed of at the scheduled meeting, may be carried over to the agenda of the following meeting.

Issued: June 5, 1995.

Donna R. Koehnke,

Secretary.

[FR Doc. 95–14182 Filed 6–6–95; 3:01 pm]

BILLING CODE 7020–02–M

NATIONAL TRANSPORTATION SAFETY BOARD

"FEDERAL REGISTER" CITATION OF PREVIOUS ANNOUNCEMENT: Vol. 60, No. 104/Wednesday, May 31, 1995.

PREVIOUSLY ANNOUNCED TIME AND DATE: 9:30 a.m., Tuesday, June 6, 1995.

CHANGE IN MEETING: A majority of the Board Members determined by recorded vote that the business of the Board required deleting the following item on the agenda at this time and that no earlier announcement was possible.

6405B Special Investigation Report: Robinson R22 Helicopter Loss of Main Rotor Control and In-flight Breakup Accidents.

FOR MORE INFORMATION, CONTACT: Bea Hardesty, (202) 382–6525.

Dated: June 5, 1995.

Bea Hardesty,

Federal Register Liaison Officer.

[FR Doc. 95–14235 Filed 6–6–95; 3:01 pm]

BILLING CODE 7533–01–M

UNITED STATES ENRICHMENT CORPORATION BOARD OF DIRECTORS

TIME AND DATE: 8:00 a.m., Thursday, June 8, 1995.

PLACE: USEC Corporate Headquarters, 6903 Rockledge Drive, Bethesda, Maryland 20817.

STATUS: The meeting will be closed to the public.

MATTERS TO BE CONSIDERED:

- Review of commercial and financial issues of the Corporation
- Procedural matters

CONTACT PERSON FOR MORE INFORMATION: Barbara Arnold, 301–564–3354.

Dated: June 5, 1995.

William H. Timbers, Jr.,

President and Chief Executive Officer.

[FR Doc. 95–14146 Filed 6–6–95; 2:58 pm]

BILLING CODE 8720–01–M

federal register

Thursday
June 8, 1995

Part II

Department of Health and Human Services

Public Health Service

42 CFR Part 84

Department of Labor

Mine Safety and Health Administration

30 CFR Parts 11, 49, 56, 57, 58, 70, 72, and 75

Department of Labor

Mine Safety and Health Administration

Department of Health and Human Services

Centers for Disease Control and Prevention

Respiratory Protective Devices; Final Rules and Notice

DEPARTMENT OF HEALTH AND HUMAN SERVICES

Public Health Service

42 CFR Part 84

RIN 0905–AB58

Respiratory Protective Devices

AGENCY: National Institute for Occupational Safety and Health (NIOSH), Centers for Disease Control and Prevention, Public Health Service, HHS.

ACTION: Final rule.

SUMMARY: This final rule addresses NIOSH and the Department of Labor/Mine Safety and Health Administration (MSHA) certification requirements for respiratory protective devices. Specifically, the rule replaces MSHA regulations with new public health regulations, while also upgrading testing requirements for particulate filters.

This action is the first of a series of modules that will incrementally upgrade current respirator approval requirements. This modular approach will allow improvements to be implemented on a safety and health priority basis as well as facilitate adaptation to new requirements by the manufacturers and users of respirators. It will also expedite the incorporation of technological advancements and will allow for the expeditious response to emerging hazards.

Except for the particulate-filter requirements, most requirements of the existing regulations are incorporated into the new regulations without change. The revised testing requirements for particulate filters significantly improve the effectiveness of evaluating air-purifying filters to remove toxic particulates from the ambient air. These requirements are consistent with two decades of advances in respiratory protection technology.

The certification of air-purifying respirators under the final rule will also enable respirator users to select from a broader range of certified respirators that meet the performance criteria recommended by CDC for respiratory devices used in health-care settings for protection against *Mycobacterium tuberculosis* (Mtb), the infectious agent that causes tuberculosis (TB).

Elsewhere in this separate part of the **Federal Register**, MSHA is publishing a final rule to remove existing regulations which are made obsolete by this final rule.

EFFECTIVE DATES: This final rule is effective on July 10, 1995. The incorporation by reference of certain publications used in the regulations is approved by the Director of the Federal Register as of July 10, 1995.

FOR FURTHER INFORMATION CONTACT: Richard W. Metzler, NIOSH, 1095 Willowdale Road, Morgantown, West Virginia 26505–2888. The telephone number is (304) 285–5907.

SUPPLEMENTARY INFORMATION:

I. Availability of Copies and Access to Final Rule

Additional copies of this final rule can be obtained by calling the NIOSH toll-free information number (1–800–35–NIOSH, option 5, 9:00 AM–4:00 PM ET). Arrangements have also been made for this final rule to be listed on the electronic bulletin boards of the Government Printing Office and of the Department of Labor; the telephone numbers are (202) 512–1387 and (202) 219–4784, respectively. This final rule may also be obtained from the NIOSH Home Page on the World-Wide Web. The location for the NIOSH Home Page is http://www.cdc.gov/niosh/homepage.html.

II. Paperwork Reduction Act

This final rule contains information collections that have been approved by the Office of Management and Budget under the Paperwork Reduction Act of 1980 and assigned control Number 0920–0109. The title, description, and respondent description of the information collection are shown below with an estimate of the annual reporting and recordkeeping burden. Included in the estimate is the time for reviewing instructions, searching existing data sources, gathering and maintaining the data needed, and completing and reviewing the collection of information.

Title: Respiratory Protective Devices.

Description: This rule prescribes requirements and procedures which must be met in filing applications for approval by NIOSH of respirators and modifications of respirators.

Description of Respondents: Businesses and other for-profits.

Estimated Annual Reporting and Recordkeeping Burden:

Section	Annual number of respondents	Annual frequency	Average burden per response	Annual burden hours
84.35	56	10.5	79.45 hr	46,716 hr.
84.41	56	10.5	22.70 hr	13,347 hr.
84.43	56	10.5	56.75 hr	33,369 hr.
Total				130,805 hr.

The above citations are currently cleared under 30 CFR Part 11 as OMB control Number 0920–0109.

A Paperwork Reduction package is being submitted to OMB, requesting approval of the requirement for labeling to be effected by § 84.33. A document will be published in the **Federal Register** when such approval has been obtained.

III. Background

NIOSH published a proposed rule (59 FR 26850) to establish a new 42 CFR part 84, on May 24, 1994. On May 26, 1994, NIOSH published a notice in the **Federal Register** (59 FR 27257) for an extension of the public comment period and a rescheduling of a public meeting. A public meeting was held to obtain comments on the proposal in Washington, D.C. on June 23–24, 1994.

The proposal and public meeting received response from the full complement of affected parties in the public. Commenters included safety professionals, respirator manufacturers, representatives of industrial and health-care facilities, and workers' associations. Three hundred and three commenters responded to the proposed rule. One hundred twenty six commenters represented health-care workers. Ninety six commenters represented health-care facilities. Fifteen commenters represented associations of health-care professionals. Fifteen commenters represented associations of health-care facilities. Seventeen commenters represented respirator manufacturers. Eight commenters represented trade or manufacturers' associations. Eight individuals commented as private citizens. Six commenters represented regulatory agencies (federal, state,

county). Five commenters represented respiratory protection experts. Three commenters represented workers' organizations. Two commenters represented test instrument manufacturers. One commenter represented industrial hygiene professionals. One commenter represented a Federal Advisory Committee. These figures include the 18 presenters at the Public Meeting held in Washington, D.C. on June 23 and 24, 1994.

IV. Summary of Major Changes in Response to Comments

The requirements of the final rule differ from those proposed (59 FR 26850) in 8 major areas. These changes, discussed in sections V. Administrative and Procedural Matters of Final Rule and VI. Discussion of Final Rule, are summarized as follows:

1. Three categories (series) of particulate filters (N-, R-, and P-series) are included rather than two (solid and liquid and solid);
2. Maximum allowable inhalation and exhalation airflow resistance values have been slightly increased and labelling changes are included to identify the certified efficiency level to users;
3. The new certification categories apply only to non-powered air-purifying respirators. Powered air-purifying particulate respirators (PAPRs) will be approved only with filters meeting the requirements for 30 CFR part 11 high-efficiency filters;
4. A new subpart KK has been added for the issuance of extensions of existing 30 CFR part 11 approvals to address respirator non-conformances when there is a demonstrated safety or health need during the transition period and for the approval of PAPRs;
5. Fit testing during the certification process is not included for particulate respirators;
6. The number of tested units has been reduced and the test data will no longer be treated statistically;
7. The period for sale and shipment of 30 CFR part 11 certified particulate respirators has been increased. The period for processing part 11 applications has been eliminated, except for demonstrated need; and
8. Testing parameters are stated more explicitly.

A summary listing of the section-by-section changes from the proposal to this final rule is provided in Appendix A—Comparison of Technical Requirements Final Rule to Proposed Rule. Each of these changes is discussed in detail in the following preamble.

V. Administrative and Procedural Matters of Final Rule

A. Modular Approach

The proposed rule explained the intent to promulgate modifications to the requirements of 30 CFR part 11 in a series of modules. There are numerous benefits to utilizing a modular approach to promulgate changes to the existing requirements. Among these are the following considerations:

1. Improvements can be implemented on a priority basis, assuring that those expected to contribute most to improving worker protection are implemented first;
2. Incremental promulgation of improvements should facilitate adaptation to new requirements by the respirator manufacturer and user communities, minimizing the potential for any disruption in the supply of certified respirators;
3. Public participation in the rulemaking process will be facilitated by proposing important regulatory changes in individual segments of separate rulemaking; and
4. Improvements made to limited segments of the rule can be implemented in a much shorter time period than comprehensive revisions to the entire rule. Therefore implementation of technological advancements and response to emerging hazards will be expedited.

Comments overwhelmingly endorsed the concept of the modular approach with only two comments specifically opposed to this approach. More than 250 comments supported the proposal's approach and approximately 40 specifically endorsed and offered recommendations for changes in the modular scheduling. Some commenters expressed concerns about this new rulemaking procedure. These predominantly questioned the interaction of modules and implementation schedules. Module interaction concerns included added costs, confusion, transition periods (grandfathering) of interrelated modules, and redesign of respirators due to effects of multiple modules. Concerns of scheduling included the priority of modules, additional module topics, transition periods for products to meet prior requirements, timetable for completion of revisions, and availability of NIOSH resources to support work on multiple modules simultaneously.

The modular approach represents a continuous improvement strategy for rulemaking. With this process, NIOSH expects regulations and products to be incrementally improved and updated to address worker health concerns and prevent any disruption in the supply of respirators. Each module will constitute a separate rulemaking activity. The modular approach undertaken by NIOSH provides clear advantages over the comprehensive approach to rulemaking. No specific time period has been identified in which all certification standards will be revised. The Institute recognizes that a predetermined revision cycle could ensure the periodic re-examination of standards. However, a requirement of this type would also diminish the capability of the Institute, with its limited resources, to address priority respiratory protection needs. The Institute has determined that a flexible approach is required that will permit expeditious responses to emerging respiratory protection priorities. These can change rapidly as technological advancements, international harmonization, changed working conditions, or the emergence of new hazards make current standards obsolete. As discussed below the Institute will balance industry's need for planning and adjustment time associated with future modules by having ample public involvement in setting the priorities for module selection and with judicious selection of transition periods.

NIOSH is aware of the needs of the respirator community to be able to plan future production and purchasing needs. This is true for consumers as well as manufacturers of respirators. NIOSH announced at the informal public meeting its intention to hold ample public meetings in advance of any proposed future modules so that these concerns could be addressed. The concerns expressed in the comments can be addressed in these informal public meetings and with the use of appropriate transition periods.

NIOSH intends to establish transition periods for implementing the requirements of each module. These transition periods will be determined by an assessment of the industry's ability to adopt the new requirements, ongoing transition periods from prior modules, and the public health implications of the changes.

Anticipated subjects and sequence of the NIOSH rulemaking were outlined in the proposed rule. Numerous comments were received providing suggestions for additional module subjects and their priority. Suggested additional subjects included powered air-purifying respirators, smoke masks, fit testing, supplied air respirators, gas masks, and combination respirators. Suggestions on scheduling priorities indicated a diversity in perceived needs. Based on the public interest in the future module

subject areas and timetable, NIOSH will conduct a public meeting to further develop the schedule with input from all interested parties. The location and date for this meeting will be announced in the **Federal Register**, Morbidity and Mortality Weekly Report (MMWR), and other media.

The Institute coordinated the development and implementation of the modular approach with OSHA and MSHA. The specific requirements of this first module were reviewed and accepted by both agencies to ensure that 42 CFR part 84 properly links with OSHA and MSHA respirator use regulations. Both agencies will participate in the development by NIOSH of appropriate user guidelines. NIOSH and MSHA developed a Memorandum of Understanding to delineate roles for the continuing joint approval under 42 CFR part 84 of respirators used for mine emergencies and mine rescue. The Institute will continue to collobrate with MSHA and OSHA as future modules are developed.

B. User's Guide

The proposal stated the intent to develop a user's notice or guide to explain the use of respirators certified for protection against particulate exposures under the new 42 CFR part 84 that would replace the existing filter respirators certified under 30 CFR part 11 subparts K and M. Commenters indicated that this user's guide should be developed in a public forum with public involvement. One commenter stated that the user's guide should be issued prior to the finalization of part 84. Another believed that its availability should coincide with the publication of the final rule. Constraints on releasing specific information as to the contents of the final rule prior to its publication limits the availability of information needed for development of a user's guide, thus making its development with public input prior to or concurrent with this rule impossible. NIOSH agrees with the commenters that public input into the user's guide will result in a better product. An informational respirator user's guide for part 84 respirators will be developed with public involvement.

The user's guide will address both the use of part 11 and part 84 respirators during the transition period. Assigned Protection Factor (APF) values are used in the respirator selection process to indicate the expected protection level for the respirator wearer. NIOSH recommends APFs for respirators certified under 30 CFR part 11 in its Guide to Industrial Respiratory Protection and in the Respirator Decision Logic. The future user's guide will recommend APFs appropriate for use with the part 84 particulate respirators until APFs can be addressed through future rulemaking. It will also provide information and recommendations on a variety of other respirator use issues associated with this current rulemaking.

During review of this rule, both OSHA and MSHA expressed strong interest in the APF values for the new part 84 particulate filter classifications. Both agencies agreed with NIOSH that APFs could not be addressed properly in this first module. They therefore urged NIOSH to develop a subsequent module defining APFs for all respirators. In the interim, OSHA regulations under Title 29 and the MSHA regulations under Title 30 will allow the use of the new part 84 particulate classifications with the APFs to be established by NIOSH in the users' guide. OSHA is in the process of updating its respirator use regulations, and the current proposal specifies acceptance of APFs developed and promulgated under part 84.

C. Use of Particulate Respirators for Protection Against TB

While the requirements in this final rule were not developed specifically to certify respirators against biological agents, this rule will address the important public health need to control the transmission of *Mycobacterium tuberculosis*, the causative agent of TB, in health-care and other facilities through the use of respiratory protective devices.

In response to the recognized risk of TB transmission in health-care facilities, increases in TB in many areas, and recent outbreaks of multidrug-resistant TB, CDC published ''Guidelines for Preventing the Transmission of *Mycobacterium tuberculosis* in Health-Care Facilities, 1994'', in the **Federal Register** (59 FR 54242) and MMWR (Volume 43, No. RR–13) on October 28, 1994. These guidelines enumerate four performance criteria that CDC has determined are necessary for respiratory protective devices used in health-care settings for protection against TB. The only currently certified air-purifying respirator class that meets all the respiratory protection performance criteria in the CDC Guidelines is a respirator with a high efficiency (HEPA) filter. Many comments were received from the health-care community supporting the positive impact of the proposed rule on compliance with the CDC Guidelines.

All nine classes of air-purifying, particulate respirators to be certified under the provisions of the new particulate filter tests (filter efficiency) in part 84 meet or exceed the performance recommendations contained in the CDC Guidelines. Several of these new classes of air-purifying, particulate respirators are expected to be less expensive than respirators with HEPA filters. Consequently, implementation of the modifications included in this rule should promote a substantial increase in respiratory protection provided to health-care and other workers potentially exposed to the *M. tuberculosis* droplet nuclei in health-care and other occupational settings.

D. Conversion From 30 CFR Part 11 to 42 CFR Part 84

Since 1974, the Mine Enforcement and Safety Administration (MESA), MSHA, and the Occupational Safety and Health Administration (OSHA) have regulated the selection, use, and maintenance of respirators in the workplace under their respective enforcement authorities. NIOSH is not including the requirements of §§ 11.2 and 11.2–1 with this redesignation to 42 CFR part 84. Sections 11.2(a) and 11.2–1 refer to respirator use and selection criteria that since have been superseded by OSHA and MSHA respirator regulations.

Section 11.2(b) allows for the continued manufacture and sale of gas masks approved under the former U.S. Bureau of Mines (BOM) Schedule 14F (dated April 23, 1955). This Schedule was replaced by the requirements in Subpart I of 30 CFR part 11 in 1972. Gas masks approved under Subpart I of 30 CFR part 11 (14G canisters) are widely available and only a limited number of types of 14F canisters are marketed. MSHA experience indicates that few of the 14F respirators are currently sold or used. MSHA also indicated that removal of the provisions in § 11.2(b) would remove the authority to market these respirators as approved devices.

NIOSH is not transferring the requirements of § 11.2(b) to 42 CFR Part 84 since NIOSH does not have the capability to process applications for these respirators. The approval records on these BOM-approved respirators no longer exist and therefore NIOSH has no way of monitoring the production of these respirators to assure that they continue to meet the approved design. Thus, NIOSH will not authorize the sale and shipment of the Schedule 14F respirators under this part 84.

In addition, the codification of the redesignated sections into a non-hyphenated numbering system results in several general heading sections that contained no substantive requirements

not being included in this redesignation. These include §§ 11.85, 11.102, 11.124, 11.140, and 11.162.

NIOSH is making a limited revision to the existing requirements of 30 CFR part 11 in this first module, requiring updated particulate filter tests. This revision eliminates the need for unique tests for particulate respirators used for different types of aerosols, such as dust/mist, dust/fume/mist, paint spray, and pesticides. The new certification tests use the most penetrating aerosol size, 0.3μm, and either a non-degrading particulate, sodium chloride, or a highly degrading oil, dioctylphthalate. Consequently, particulate filters certified under these new procedures can be used without regard to aerosol size, taking into consideration only the degrading or nondegrading nature of particulates and the APF required by exposure concentrations. To revise respirator nomenclature to be consistent with this fundamental change in certification philosophy, the words dust, fume and mist are replaced with particulate in the final rule.

Existing subpart M of part 11 (§§ 11.170 through 11.183–7) addresses the requirements for pesticide respirators. The requirements of subpart M are not included in this redesignation to 42 CFR part 84. This rule eliminates this category and the tests specific to it, leaving subpart M reserved. All references to subpart M and pesticides as a classification for approval are eliminated. NIOSH will discontinue issuance of certifications that classify these respirators as suitable for use against a specific particulate.

The existing test requirements in §§ 11.124–21 through 11.124–24 specify that a test subject wearing the respirator be exposed to an abrasive blasting environment in which the blasting agent is composed of 99+ percent free silica (SiO_2). This requirement is not included in this redesignation to 42 CFR part 84. The purpose of this requirement was to determine the adequacy of protection provided in such environments. NIOSH administratively suspended such tests over 20 years ago because they placed test subjects at risk of exposure to fractured crystalline silica. These tests are not included in this final rule. Requirements for abrasive blasting and other atmosphere supplying respirators as well as fit testing for all respirator types will be addressed in a future module. In the interim, NIOSH will continue the administrative policy of the past two decades of conducting quantitative fit testing in lieu of the tests stipulated in §§ 11.124–21 through 11.124–24.

Two comments recommended the inclusion of administrative policies to the rule. One commenter suggested that §§ 11.124–21 through 11.124–24 (referring to air-line respirators) be restored or replaced with the current administrative policy of quantitative fit testing. Another commenter was concerned that the NIOSH policy of allowing a mixed-gas Self Contained Breathing Apparatus for fire fighting was not included in the proposed rule. NIOSH agrees with these commenters that administrative policies related to specific changes in a module should be incorporated. However, the topics of concern to these commenters addressed administrative policies in subject areas that were not proposed to be changed in this module, therefore, they have not been incorporated.

NIOSH has not included the test procedures of §§ 11.124–21 through 11.124–24 due to NIOSH's concern of health risks to test subjects during pre-submission testing performed by a manufacturer seeking approval of a respirator intended for use in an abrasive blasting environment. Although no Type AE or BE respirators have ever been certified, Type AE, BE, and CE respirators may be certified for use in an abrasive blasting environment. These respirators will be tested using Air-supplied Respirator Section Test Procedure Number 23 Abrasive-Blast, Type CE. Copies of this procedure are available from the Certification and Quality Assurance Branch, 1095 Willowdale Road, Morgantown, West Virginia, 26505–2888.

E. MSHA's Regulatory Role

The final 42 CFR part 84 regulation is consistent with the current MSHA and NIOSH respirator approval program, placing responsibility for certifying most respirators with NIOSH. MSHA and NIOSH will continue to jointly review and approve respirators used for mine emergencies, mine rescue, and the associated service-life plans, user's manuals, and other documentation. Among the types of devices for which this role is particularly important are self-contained self-rescue devices. The final rule preserves MSHA's current role in the certification of such respirators whose unique use in mining is an important part of safeguarding the health and safety of miners. In addition, MSHA will continue to test electrical and electronic components of respirators for use in potentially explosive atmospheres in gassy underground mines and issue a separate MSHA approval under 30 CFR part 18 for the electrical components of such respirators.

In implementing the final regulation, NIOSH and MSHA have developed a new Memorandum of Understanding (MOU) that reflects administrative matters related to respirator approval, including immediate notification to MSHA of field complaints and identified deficiencies concerning approved respirators. Three commenters recommended that the public be allowed to review and comment on the MSHA/NIOSH Memorandum of Understanding. It was indicated by an agency representative that such comments on the contents of the MOU would be welcomed. Two of these commenters were concerned that the responsibilities and accountability, specifically MSHA's involvement in the certification of mining-specific respiratory protective devices, be maintained in the Memorandum of Understanding. The third commenter was unsure if the Memorandum of Understanding would have an effect on the notice of public rulemaking. Comments submitted subsequent to the public meeting reiterated the concerns stated at the meeting. These comments were considered in the MOU's development and have subsequently been addressed. Copies of the MOU will be available from NIOSH and MSHA.

The new Memorandum of Understanding between MSHA and NIOSH delineates the interaction between the agencies in carrying out the responsibilities and authorities provided for in the Mine Safety and Health Act of 1977 (30 USC § 801 et seq) and this final rule. It defines the method of implementation of the regulation and has no effect on its content. The agency has determined that this MOU is most appropriately developed between the two agencies and thus, commenters did not directly participate in the development of the MOU. As indicated above, public comments on the MOU are welcome.

F. Transition Period

The proposal included provisions for phasing out part 11 particulate respirators. Specifically, no applications were to be accepted after the effective date of part 84, with a maximum of 6 months for processing in-house applications. Sale and shipment (distribution) of part 11 particulate respirators would have been allowed for only 2 years from the effective date of part 84.

Several commenters indicated that these transition periods were much shorter than the 5-year phase-out period proposed by NIOSH in 1987. Some comments on the proposed schedule stated that there must be an appropriate

time to develop new products, receive certification, and initiate production of the new respirators. Commenters were also concerned the use of the term distribution implied manufacturer control of the distributer system and the resale market. Several commenters recommended 4 years for NIOSH-processing of part 11 applications, and for sale and shipment of part 11 respirators. NIOSH is expanding the phase-out period from two to three years to address these concerns.

With the effective date of part 84, MSHA and NIOSH will no longer accept applications for new approvals or extensions of approval of respirators under part 11 provisions. All applications received after the effective date of part 84 will be considered as applications for a new or extension of approval under part 84. Valid part 11 applications that were received prior to the effective data of part 84 will be processed for approval under part 11 provisions. A subpart KK containing the part 11 requirements for particulate respirators has been added to the final rule to provide continued authority for NIOSH to issue extensions of approvals needed to address respirator recall and retrofit matters that are associated with health and safety issues for workers. Respirators listed as certified under the provisions of 30 CFR part 11, subparts K or M, may not be sold or shipped by the approval holder as NIOSH/MSHA certified respirators effective July 10, 1998. Continued use of distributed particulate respirators is under the jurisdiction of OSHA and MSHA and therefore is not affected by this rule. Because certifications will not be revoked for part 11 devices sold and shipped by the approval holder prior July 10, 1998, NIOSH anticipates that OSHA and MSHA would permit continued use of those part 11 respirators.

This 3 year period was selected to ensure the timely replacement of the part 11 respirators that exhibit low initial efficiency levels while allowing an ample supply of respirators to remain available for use. This timeframe will provide sufficient time for manufacturers to have respirators approved and manufactured in quantities to meet demand. Manufacturers' comments to the proposed rule support this timeframe, as some manufacturers appear ready to provide part 84 respirators immediately. At least one commenter stated, without reservation, preparedness to submit applications to meet the new requirements. Several commenters requested that NIOSH accept applications for part 84 respirators upon publication, rather than the effective date of part 84. One manufacturer commented that NIOSH should anticipate at least 10 applications from each manufacturer upon part 84 becoming effective. NIOSH also expects a significant number of presently certified particulate respirators, in addition to new designs, to meet the requirements of this rule. Therefore, a high initial application rate for approval of part 84 particulate respirators is expected.

Some commenters expressed concern that NIOSH would not be able to expeditiously process the part 84 applications, thereby delaying introduction of the new respirators to the marketplace. Delays in processing the part 84 applications would prolong the time needed for transition to these new respirators. Division of the NIOSH staff and resources between processing part 84 applications and pending part 11 applications, along with routine extensions of existing part 11 particulate respirator certifications, may initially slow the certification and availability of part 84 respirators. However, the Institute has determined that it cannot reject without action part 11 applications that were validly prepared and submitted while the provisions of part 11 remain in effect. NIOSH therefore will process all valid part 11 applications that were received by NIOSH before the effective date of part 84. The authority for the approval holder to sell and ship particulate respirators under any part 11 certification issued under these conditions will expire along with the other part 11 certifications on July 10, 1998.

The new technical requirements of part 84 only address air-purifying respirators. Other classes of respirators, such as self-contained breathing apparatus, gas masks, etc., are not affected by the new filter penetration test requirements. Therefore, NIOSH intends to continue issuing new and extension of approval numbers in the same format designation (TC number) as issued under existing part 11 for those respirator types whose technical requirements for approval under part 84 have not been modified from existing part 11. A new approval number series will be initiated for the products whose technical requirements have been upgraded under part 84. By checking the approval number, respirator users will be able to quickly and easily distinguish those products that have demonstrated the improved performance requirements of the new part 84 from those that have demonstrated compliance with only the existing part 11 standards that are transferred to part 84. NIOSH further intends to issue public notices of the new approval designations to be used for products demonstrating performance to the improved standards.

VI. Discussion of Final Rule

A. Certification Fit Testing

The proposal contained two sections (§§ 84.181 and 84.182) that would have retained the existing Part 11 particulate respirator fit test protocols using isoamyl acetate. These tests were proposed to redesignate the existing §§ 11.140–1 and 11.140–2 with the tests unchanged to minimize the scope of the changes proposed in the first module.

The currently required particulate respirator facepiece fit tests of part 11 use isoamyl acetate, an organic vapor, as the test agent. Under existing part 11, such tests are required for high efficiency (HEPA) and dust, fume, and mist (DFM) respirators, but not dust/mist (DM) respirators. Since particulate filters are not intended to filter organic vapors, the tested respirators must often be modified by the addition of an activated charcoal layer. This added charcoal layer prevents penetration of the isoamyl acetate through the filter so that the respirator-to-face fit can be evaluated. As a result, the certification program tests surrogate respirators that may have fitting characteristics that differ from the marketed (certified) respirators.

Numerous and varied comments were provided on these sections. A number of commenters suggested that NIOSH eliminate fit testing as a condition of certification. Two commenters recommended that the rule should require manufacturers to submit test data showing good fit characteristics in lieu of NIOSH conducting fit testing. Other commenters requested that NIOSH test the respirator-to-face fit, or otherwise assure that proper fitting characteristics were provided by every certified respirator. Several other commenters requested that fit testing be made a meaningful test. Several others suggested that a quantitative protocol rather than a qualitative fit protocol should be used. Two commenters stated support for the fit tests as proposed.

Several of the reasons given for eliminating fit testing were that fitting respirators to individuals in the certification program does not predict the fit of an individual wearer; fit testing of individual workers at the worksite is required by OSHA and that is the appropriate setting for fit testing; the isoamyl acetate test has not been validated; and, the isoamyl acetate test

has to be performed on modified respirators.

The comments requesting that fit testing be made a meaningful test were based on reasoning similar to those suggesting elimination of the test. In lieu of elimination, they suggested that some inadequacies could be resolved with modification of the test protocol to use a particulate aerosol, such as Bitrex, as the test agent. Changing the test protocol to test with a particulate would at least permit the tested respirator filters to be as certified, thereby eliminating specially-made surrogates.

Commenters endorsing NIOSH continuation of fit testing believed that the present certification process provides an assurance that the respirator will properly fit a given worker when use of the respirator is needed in the workplace.

The problems associated with testing the facepiece-fit in a certification program have been recognized for years. Efforts have been made to seek more meaningful test results; nevertheless, the validity of the test results remain questionable.

Successful fit testing in the certification process provides no assurance that the respirator will properly fit a given worker when used in the workplace. The only means presently available to assess the fit achieved on the worker is a respirator-to-face fit test conducted on that individual with the chosen respirator. Even this test procedure, conducted on the individual, cannot assure that the respirator will maintain a proper fit when use of the respirator is needed in the workplace. This concern is compounded when the fit is determined with a surrogate respirator.

During review of this rule, both OSHA and MSHA favored inclusion of respirator fit testing and fit checking procedures as part of NIOSH respirator certifications under the new part 84 particulate filter classifications. Both agencies accepted the determination by NIOSH that these issues cannot be properly addressed in this first module. Both agencies therefore urged NIOSH to develop a face fit module to include respirator fit testing and fit checking procedures for all respirators.

The purpose of face fit testing in the certification program has been to assure that respirators have generally good face fitting characteristics. However, at this time NIOSH does not have studies that define the effectiveness of either the isoamyl acetate or American National Standards Institute (ANSI)/OSHA accepted fit tests in predicting actual workplace protection provided to workers. NIOSH is presently conducting research for this purpose. In the interim, lacking validation and correlation of testing protocols, workers' health concerns are best served through the application of fit-testing and fit-checking procedures on individual workers in a quality respirator program. Therefore, the isoamyl acetate fit tests proposed in §§ 84.181 and 84.182 are not included in this final rule. NIOSH will address issues associated with face-fit efficacy in a separate module upon completion of the necessary research.

B. Powered Air-purifying Particulate Respirators

The proposed regulation included filter efficiency requirements for powered air-purifying respirators (PAPRs). The solid and liquid and solid categories were to be tested with sodium chloride (NaCl) and dioctyl phthalate (DOP), respectively. The classes to be certified were the 99.97 and 99% efficiency levels. The remaining design and test parameters for PAPRs were retained from part 11 without change.

Commenters questioned why the efficiency levels proposed for PAPRs were not the same as non-powered respirators. The proposal specified three efficiency levels for non-powered (95, 99, 99.97) and only two levels for PAPRs (99 and 99.97). Commenters indicated many present filter cartridges are interchangeable between the non-powered and PAPR units, recommending corresponding filter efficiencies between the non-powered and PAPR units to retain this broader market for a filter design.

Numerous commenters stated a concern that the proposed requirements of subpart K did not adequately address PAPRs. These commenters indicated that the respiratory protection provided by PAPRs is dependent on the respirator components working together as a system. The proposed rule, focusing on filter efficiency, did not address the system requirements for these respirators. These commenters reasoned that the performance of these complicated respirator systems deserves special consideration because of unique problems addressing airflow, filter efficiency, and fit. These commenters suggested that the requirements for powered units be removed from subpart K, to be addressed in a separate module.

Other commenters addressing PAPR requirements stated concerns over sodium chloride (NaCl) filter test instrumentation capabilities. With the present state-of-the-art capabilities, the proposed PAPR loading requirements are difficult to achieve. This leads to a number of testing difficulties including instrumentation availability, time consuming tests, reproducibility of results, and system costs. NIOSH agrees with these concerns and will address them in the forthcoming module.

Commenters to the proposal also acknowledged that the resultant part 84 filters would be a significant improvement over those currently certified and marketed under part 11. Two commenters recognized the concern over the performance of part 11 powered dust, fume, mist respirators. They indicated that this concern could be addressed by incorporating only part 11 high-efficiency filter requirements for PAPRs approved under part 84. NIOSH agrees and has revised the rule to permit the continued use of part 11 high efficiency filters for PAPRs approved under part 84.

NIOSH also agrees with commenters that the proposed filter efficiency requirements alone do not adequately address the operational parameters of PAPRs that should be revised. The sections of subpart K have therefore been modified to be applicable only to non-powered air-purifying particulate respirators. The requirements for the powered units will be addressed in a forthcoming module. In the interim, powered air-purifying particulate respirators equipped with HEPA filters will be approved under the provisions of subpart KK.

C. Filter Classification

The proposal provided for six classes of filters in a filter classification system with three filter efficiency levels and two categories of filter degradation resistance. The three efficiency levels (99.97, 99, and 95%) were determined by testing with the most penetrating aerosol size until a maximum loading of 200 mg was reached. The two degradation resistance categories were established by the choice of either NaCl or DOP as the test challenge aerosol. Sodium Chloride is only mildly degrading to filter media while DOP is a liquid oil that is highly degrading. Accordingly, filters tested with the NaCl aerosol were recognized as not highly resistant to degradation and only appropriate for use with solid aerosols in the workplace. Filters tested with the liquid DOP oil were recognized as highly resistant to degradation and considered appropriate for both liquid and solid workplace aerosols.

The categories and classes of filters that would have been certified under the proposal are summarized below:

Category	Class	Efficiency	Test agent
Solid and liquid	A	99.97	DOP

Category	Class	Efficiency	Test agent
Solid	A	99.97	NaCl
Solid and liquid	B	99	DOP
Solid	B	99	NaCl
Solid and liquid	C	95	DOP
Solid	C	95	NaCl

The behavior of filters to challenge by each of the two test aerosols depends on the filter type. Mechanical filters and electrostatic filters are the two fundamental types of particulate filters on the market. Mechanical filters' efficiencies are determined by mechanical features such as the diameter, orientation, and arrangement of the fibers that comprise the filter. Electrostatic filters have a static electric charge on the filter fibers to enhance the attraction and retention of the aerosolized particles. The enhanced efficiency due to the electrical charge means that an electrostatic filter generally offers lower breathing resistance than a mechanical filter with the same initial efficiency. This occurs because fewer fibers are needed in the electrostatic filter to achieve the same level of efficiency as a mechanical filter. However, the efficiency of electrostatic filters can be significantly reduced by exposure to certain aerosols while mechanical filters are generally more resistant to degradation.

Comments concerning resistance of filters to degradation were generally of two conflicting schools of thought. One school favored replacing the two proposed tests with a single, more severe test. The other favored retaining the two proposed tests at the same or reduced level of severity.

Commenters opposing the proposed classification system stated it was not a severe enough test of resistance to filter degradation because it did not represent a worst-case test. They recommended testing all filters with a DOP aerosol with the test continued until there was no further decrease in filter efficiency. Those supporting this position argued that the proposed filter classification system could result in overexposure of workers as workplace aerosols degrade some filters to a level below the certified efficiency level. It was indicated that various workplace contaminants can cause the beneficial filtering effects of the charge on electrostatic filters to become partially or totally ineffective without indication to the wearer. As the electrostatic charge on the filter fibers is masked by the deposition of aerosol, the efficiency of the filter can be reduced to below the anticipated level of protection, based on the certified efficiency level. Further, these contaminants have been identified as solids as well as liquids. With no warning to alert the wearer of a decrease in the performance level of the filter, these commenters believed that the proposed tests to determine filter efficiency should be modified to assure that the filters are tested until the minimum level of efficiency is achieved. The stated advantage of such an approach is that filters could be used with any aerosol for indefinite time periods without concern of filter degradation.

The other school argued that the two proposed categories were either appropriate or too severe. They suggested continuing with the two categories either as proposed or with a reduction in the amount of filter loading (to reduce the severity of the test). They argued that the two proposed filter tests, being a combination of worst-case and severe test parameters, would assure adequate filter performance in the workplace.

Several commenters stated that the great majority of respirator applications are in worksites with aerosols that do not significantly diminish the efficiency level of the electrostatic filters. Workplace studies were submitted to support the conclusion that, because of the highly degrading nature of DOP and the proposed high loading level, the proposed test were many times more severe than conditions realistically encountered by workers. These commenters recommended, not only the certification of two categories as proposed, but that the proposed test loading levels for both the NaCl and DOP aerosols be reduced to more closely simulate workplace exposures.

The advantage of the proposed tests was the benefit of potentially lower breathing resistance, with the resulting increased comfort, of electrostatic filters for the great majority of respirator wearers who are not exposed to highly degrading workplace aerosols. Further, the electrostatic filter types were reported by commenters to have a potentially lower cost than their mechanical filter counterparts.

This final rule provides for the needs of both the majority workers with no need for filters highly resistant to degradation and workers needing filters most resistant to degradation. To that end, this rule provides for a third category of filters added to the two categories provided for in the proposal. The new filter category is tested with the highly degrading DOP until no further decrease in filter efficiency is observed.

As discussed under VI. Discussion of Final Rule, D. Section-by-Section Discussion, § 84.170, NIOSH is introducing a new terminology for the three filter categories. The solid only filters in the proposal are labeled N-series filters in this final rule. The proposal's solid or liquid filters are now labeled R-series filters. Filters of the new, third category are labeled P-series filters. The three categories, therefore, provide filters for a complete range of applications.

Further, to address concerns about the use of A, B, and C in the proposal to indicate the efficiency level, the final rule uses numerical notations of 100, 99, or 95 to indicate filter efficiency. The rationale for retaining the proposed efficiency levels of 99.97, 99, and 95% is discussed in VI. Discussion of Final Rule, D. Section-by-Section Discussion, § 84.170(c)(3). The terminology of this final rule is related to that of the proposal as follows:

Final	Proposal
N100	Solid only/type A.
N99	Solid only/type B.
N95	Solid only/type C.
R100	Solid & Liquid/type A.
R99	Solid & Liquid/type B.
R95	Solid & Liquid/type C.
P100	(Not included in proposal).
P99	(Not included in proposal).
P95	(Not included in proposal).

As stated in the proposal, NIOSH selected the test criteria to be a combination of worst-case and very severe test conditions. The N- and R-series filters will be tested to a specified maximum loading level as in the proposal. Performance of these two filter classes at loadings beyond that maximum will not be evaluated. Furthermore, NIOSH is aware that few data are available to assess the performance of these respirators in workplace settings over an extended period of time. Therefore, the N- and R-series filters will be certified with the recognition that in some settings time-use limitations should be applied. A single shift limitation, for example, may be appropriate to guard against possible degradation of performance below the efficiency certified by NIOSH. In addition to possible time-use restrictions, the N-series filters should be restricted to use in those workplaces free of oil aerosols because the N-series certification tests will involve challenge with non-degrading sodium chloride aerosols. The R-series filters should require no such aerosol-use restrictions because R-series certification tests will involve challenge with highly degrading dioctylphthalate aerosols. Because the P-series certification tests will involve challenge with this highly degrading

aerosol that will continue until the filter efficiency declines to its lowest level, the P-series may require neither aerosol-use nor time-use limitations. As for any filter, service time will be limited by considerations of hygiene and increased breathing resistance due to filter loading.

Guidelines for the use and selection of part 84 particulate respirators, as described in V. Administrative and Procedural Matters of Final Rule, B. User's Guide, are to be developed with public input. The user's guide will include detailed guidance concerning use limitations for these three filter series.

D. Section-by-Section Discussion.

All sections redesignated to 42 CFR part 84 without modification from 30 CFR part 11 are excluded in this discussion of the final rule. The sections redesignated without modification will be revised, where appropriate, to:

(1) remove references to MSHA, except for those related to certain mining applications,

(2) update the NIOSH certifying organization to the Certification and Quality Assurance Branch, Division of Safety Research, NIOSH, 1095 Willowdale Road, Morgantown, West Virginia 26505–2888,

(3) remove references to subpart M, pesticide respirators, and tests for protection during abrasive blasting,

(4) correct nonsubstantive typographical errors and reference the new part 84 section designations, and

(5) update references to incorporation-by-reference documents.

The sections redesignated without modification are as follows:

84.1, 84.11, 84.12, 84.21, 84.22, 84.30, 84.31, 84.32, 84.34, 84.35, 84.36, 84.40, 84.41, 84.42, 84.43, 84.50, 84.51, 84.53, 84.60, 84.62, 84.63, 84.64, 84.65, 84.66, 84.70, 84.71, 84.72, 84.73, 84.74, 84.75, 84.76, 84.77, 84.78, 84.79, 84.80, 84.81, 84.82, 84.83, 84.84, 84.85, 84.86, 84.87, 84.88, 84.89, 84.90, 84.91, 84.92, 84.93, 84.94, 84.95, 84.96, 84.97, 84.98, 84.99, 84.100, 84.101, 84.102, 84.103, 84.104, 84.110, 84.111, 84.112, 84.113, 84.114, 84.115, 84.116, 84.117, 84.118, 84.119, 84.120, 84.121, 84.122, 84.123, 84.124, 84.126, 84.130, 84.131, 84.132, 84.133, 84.134, 84.135, 84.136, 84.137, 84.138, 84.139, 84.140, 84.141, 84.142, 84.143, 84.144, 84.145, 84.146, 84.147, 84.148, 84.149, 84.150, 84.151, 84.152, 84.153, 84.154, 84.155, 84.156, 84.157, 84.158, 84.159, 84.160, 84.161, 84.162, 84.163, 84.172, 84.173, 84.174, 84.175, 84.176, 84.178, 84.182, 84.190, 84.191, 84.192, 84.193, 84.194, 84.195, 84.196, 84.197, 84.198, 84.199, 84.200, 84.201, 84.202, 84.204, 84.205, 84.207, 84.250, 84.251, 84.252, 84.253, 84.254, 84.255, 84.256, 84.257, and 84.258.

The following section-by-section analysis discusses each new or revised section to 42 CFR part 84. All part and section references for part 11 are to Title 30 of the Code of Federal Regulations (30 CFR). All part and section references for part 84 are to Title 42 of the Code of Federal Regulations (42 CFR).

Subpart A—General Provisions

Section 84.2—Definitions

This section is redesignated and revised from § 11.3. This section is unmodified from the proposal.

The existing definitions for air contamination level, Bureau, concentration limits for radionuclides, DOP, MESA, pesticide, radionuclides, and smoke are deleted. These terms are used in provisions that are modified or deleted as a result of the filter penetration test changes included in this final rule. These definitions have, therefore, become unnecessary.

The existing definition for Testing and Certification Laboratory is modified to reflect the present name of the organization as the Certification and Quality Assurance Branch. One commenter suggested the definition of respirator be modified to require a respirator to have one-way airflow with inspiratory and expiratory valves, able to be properly positive and negative fit-checked under usual working conditions. Additionally, this commenter recommended adding a definition for mask as any device that protects the wearer against inhalation of a hazardous atmosphere.

The primary purpose of a respirator is to provide respiratory protection for the wearer. Neither requiring inhalation and exhalation valves nor reclassifying respirators as masks would enhance worker protection. Thus NIOSH retained the current definition.

Section 84.3 Respirators For Mine Rescue or Other Emergency Use In Mines

This section is new and maintains MSHA's role in the approval of respirators designed for mine rescue or other mine emergency use. This section is unmodified from the proposal. Under this provision, MSHA and NIOSH will conduct joint review and certification of respirators used for mine emergencies and mine rescue. This provision recognizes MSHA's expertise in identifying the special needs and considerations for respirators used in the mining environment. This role replaces MSHA's existing role as a joint approver of all respirators. Several commenters, while endorsing the transfer of the authority for the regulation, recognized MSHA's unique expertise relating to mine-specific respiratory protective devices. These commenters strongly supported MSHA's continued close involvement in this equipment including, but is not limited to, filter self-rescuers, self-contained self-rescuers, and emergency rescue equipment.

Paragraph (a) specifies that NIOSH and MSHA will jointly certify any respirator designed for mine emergencies, mine rescue or other emergency use in mines. This joint review and certification includes any associated service-life plans, user's manuals, and other supporting documentation. This paragraph further specifies that certifications for these respirators include any identified use limitations related to mine safety and health as a condition of certification.

Paragraph (b) specifies NIOSH and MSHA will jointly address recall and retrofit matters arising from field complaints or identified deficiencies concerning any respirators used in the mining environment. A new Memorandum of Understanding is to further delineate MSHA's role in such matters, including participation in any related field or manufacturing site audits.

Subpart B—Application for Approval

Section 84.10 Application Procedures

This section is redesignated from existing § 11.10 with only paragraph (e) modified. This section is unmodified from the proposal. Paragraph (e) retains the existing requirement for inspection, examination, and testing by MSHA of electrical and electronic components to be permissible in accordance with 30 CFR part 18 for respirators intended for use in mining environments and having permissible electrical or electronic components. MSHA will continue to conduct this testing and issue a separate MSHA approval number for those respirators found acceptable. The process for conducting the permissibility evaluation of these components and their identification remains unchanged from the existing policies and practices.

Subpart C—Fees

Section 84.20 Examination, Inspection, and Testing of Complete Respirator Assemblies; Fees

This section is redesignated from existing § 11.20, and modified only to reflect the new particulate filter classification scheme. This section is unmodified from the proposal.

Subpart D—Approval and Disapproval

Section 84.33 Approval Labels and Markings; Approval of Contents; Use

This section is redesignated from existing § 11.33. This section is unmodified from the proposal.

Paragraph (b) specifies the use of the NIOSH emblem on the approval label, replacing the MSHA emblem.

Paragraph (e) of this section is modified to identify the existing dust, fume, and mist class of respirator as a particulate respirator. The new designation is consistent with the testing criteria under which these respirators are certified. The table in paragraph (e) identifying the approval label requirements is modified by the removal of references specific to paint spray and pesticide respirators, also consistent with the changes associated with the non-powered air-purifying particulate filter efficiency level determination test.

Subpart F—Classification of Approved Respirators; Scope of Approval; Atmospheric Hazards; Service Time

Section 84.52 Respiratory Hazards; Classification

This section is redesignated from existing § 11.52. This section is unmodified from the proposal.

It is modified only to delete paragraph (d). Reference to the pesticide classification is no longer appropriate with the introduction of the particulates classification.

Subpart G—General Construction and Performance Requirements

Section 84.61 General Construction Requirements

This section is redesignated from § 11.61. This section is unmodified from the proposal.

The provision for respirator components to meet the permissibility requirements of 30 CFR part 18 [paragraph (e)] has been deleted because MSHA's workplace regulations separately and independently establish this requirement for certain mining applications. This change is consistent with existing practice, whereby, MSHA conducts the evaluation and testing of these components and issues a separate approval to cover this aspect of respirator design.

Subpart I—Gas Masks

Section 84.125 Particulate Tests; Canisters Containing Particulate Filters; Minimum Requirements.

This section is redesignated from existing § 11.102–4, without modification except to specify the new requirements that respirators for protection against particulates (dusts, fumes, mists, and smokes) in combination with gases, vapors, or gases and vapors, must meet. Except for reference to the redesignated section numbers of subpart K, this section is unmodified from the proposal. With the exception of the airflow resistance test of § 84.181, these respirators are required to meet the requirements specified in §§ 84.170 through 84.183.

Subpart K—Non-Powered Air-Purifying Particulate Respirators

Section 84.170 Non-Powered Air-Purifying Particulate Respirators; Description

This section, derived from § 11.130, is revised to define non-powered air-purifying particulate respirators in a more concise way than previously provided for respirators designed for protection against dusts, fumes, mists, paint sprays, and pesticides. An essential benefit to filter-mask purchasers of new certifications under this part is that they will no longer have to be knowledgeable about the contaminant particle sizes. Under the provisions of this part, NIOSH will certify filter performance with a test aerosol size chosen so that filter performance for essentially all other aerosol sizes will be higher than that certified by NIOSH.

Paragraph (a) describes non-powered air-purifying particulate respirators as those with air drawn through the air purifying filter as a result of the negative pressure generated with the inhalation of the wearer. Non-powered respirators include respirators that depend solely on the inhalation and exhalation of the wearer to provide an adequate supply of purified breathing air to the wearer. These respirators are designed with filters to provide respiratory protection against atmospheres that contain adequate oxygen to support life and are contaminated with particulates not immediately dangerous to life or health. Particulates for which these respirators provide protection include contaminants such as dusts, fumes, mists and smoke.

Paragraph (b) establishes three series of non-powered air-purifying particulate respirators designated as N-series, R-series, and P-series. The N-series respirators are intended for use in those workplaces free of oil aerosols. The R-series and P-series respirators are intended for removal of any particulate that includes oil-based liquid particulates.

Paragraph (c) establishes the classification of non-powered air-purifying particulate respirators according to the efficiency level of the filter(s) when tested to the requirements of part 84.

Paragraph (c)(1) requires N100, R100, and P100 filters to demonstrate a minimum efficiency level of 99.97 percent.

Paragraph (c)(2) requires N99, R99, and P99 filters to demonstrate a minimum efficiency level of 99 percent.

Paragraph (c)(3) requires N95, R95, and P95 filters to demonstrate a minimum efficiency level of 95 percent.

As discussed previously, some commenters supported the two-classification system that was proposed while others stated only one class was needed. NIOSH agrees with commenters that a class of respirators should be available for use in environments where the filter efficiency level is not diminished by the worksite aerosol (N-series). Insufficient studies have been conducted to definitively characterize workplace aerosols and their effect upon filter efficiencies. Therefore, NIOSH will certify the new filter categories recognizing potential aerosol-use and time-use limitations as discussed above and in VI. Discussion of Final Rule, C. Filter Classification.

Many commenters expressed concerns of confusion in the selection of the proposed new particulate respirators. Various commenters pointed to the proposed multiple (two) classes, class nomenclatures (Solid Only and Liquid and Solid), type nomenclature (A, B, and C), and filter color requirements as sources for this confusion.

Several commenters recommended that the designations (A, B, and C) for the types be changed to eliminate confusion of the particulate respirator classes with other approved respirator types. Some of these commenters suggested nomenclatures similar to P3, P2, and P1 used for particulate filters in the European community. Another of these commenters recommended a further delineation of the alphabetic notation with each type and class designated by a unique letter (A, B, C, D, E, and F) for clarification. Still another commenter suggested that the nomenclatures be changed but made no specific suggestion.

To address concerns about confusion in the selection of respirators under part 84, NIOSH has developed new category classifications and will develop a user's guide, as discussed in V. Administrative and Procedural Matters of Final Rule, B. User's Guide.

Numerous comments were also received regarding the proposed efficiency levels. Many commenters

supported the three efficiency levels as proposed, while others suggested levels different than proposed. A 90% filter efficiency level was the most frequently recommended alternative, sometimes suggested as a fourth class.

NIOSH recognizes that the efficiency requirements contained in the proposed rule are to some extent technology-forcing. However, HEPA-level respirators that perform at an efficiency level proposed under part 84 have been available for years. One commenter (a manufacturer) stated that the technology for producing 95% (Class C) efficiency level respirator is practical, reasonable, and available. This commenter further stated that a Class C respirator could be marketed at a price not exceeding the price of a 30 CFR part 11 disposable DFM respirator.

The principal advantage of a 90% efficiency class would be to permit a larger percentage of filters certified under part 11 to be certified without modification under the new part 84 tests. The best performing of the current DM and DFM respirators are expected to meet the requirements of a 95% class, but a significant number of DM respirators would not be expected to meet the requirements even of a 90% class. Limiting the minimum filter efficiency to 95% will minimize worker exposure to airborne contaminants from filter penetration. This is important because it is the most controllable element of protection afforded by respiratory protection programs. The human variables in these programs are more difficult to guarantee: that workers are provided the appropriate class of respirator; that the workers are effectively fit tested; that they achieve and maintain an effective face seal each time they wear a respirator; and that they replace disposable respirators and filters before their effectiveness is diminished. Some commenters urged, for these reasons, that all filters should have greater than 99% efficiency. Such high filter efficiency poses technologic challenges, increases costs to manufacturers and users, and increases breathing difficulty for respirator wearers. NIOSH believes that a 95% minimum efficiency best balances the public health concern and these competing considerations.

Although a number of manufacturers have indicated they are prepared now to submit filters for certification under these new test procedures, there may be some who are not. These manufacturers will have three years to develop this capacity while they continue to market their existing products.

Section 84.171 Non-powered Air-purifying Particulate Respirators; Required Components

This section is redesignated from existing § 11.131, modified only to incorporate the new terminology of particulates to describe dusts, fumes and mists. This section is unmodified from the proposal, except for the title change.

Section 84.177 Inhalation and Exhalation Valves; Minimum Requirements

This section is redesignated from existing § 11.137, modified only to delete reference to the silica dust tests for single-use respirators of § 11.140–5. This section is unmodified from the proposal. The respirator performance requirements of these tests are replaced by the non-powered air-purifying particulate filter efficiency level determination test contained in this rule.

Section 84.179 Non-powered Air-purifying Particulate Respirators; Filter Identification

This section requires the identification of non-powered air-purifying particulate respirators by labeling with a new classification system for the series and efficiency of the filters. The new terminology of non-powered air-purifying particulate respirator replaces the existing dust, fume, and mist respirator, as discussed previously.

The requirement for the manufacturer to specify the filter-series and efficiency level classification in the certification application is contained in paragraph (a). This classification would include the series of the filter and the expected efficiency of the filter based on the test requirements specified in § 84.182.

The information to be included on the label of a filter for a certified non-powered air-purifying particulate respirator is specified in paragraphs (b)(1) through (b)(9). This labeling defines the efficiency level achieved in the performance testing (i.e., 99.97%, 99%, or 95%) and the series of the filter (i.e., N, R, or P). This information is necessary to allow the user to make an informed decision on selecting the appropriate respiratory protection.

To facilitate this selection process, the P100 filters are color coded magenta to allow them to be easily distinguished from the other filter types. The filters other than the P100 can be of any color except magenta. This color coding is consistent with the present universally accepted color code convention which identifies the best performing filters (HEPAs) by their magenta color.

NIOSH has modified these labeling requirements from the proposal in agreement with the commenters who stated that the labelling should clearly state the certified efficiency rating numerically and include the series on the filter, filter package, or respirator box.

One commenter suggested that all classes of certified respirators should be color coded for user identification; another stated that the high efficiency filters of each series should be magenta. It was also requested that color coding as well as letter designation be specified for all respirators. A more complex color-coding system may add confusion to the respirator selection process. With the more descriptive classification identifying labels required by this final rule, the potential for confusion in selection of the appropriate respirator has been reduced. Therefore, NIOSH has not adopted these suggestions.

Section 84.180 Airflow Resistance Tests

Section 84.180 is derived from § 11.140–9. It is modified to delete the final inhalation resistance requirements. The non-powered air-purifying particulate filter efficiency level determination tests are not designed to simulate loading of the filter at the worksite. Therefore, these requirements are not appropriate with the introduction of these new tests.

Paragraph (a) provides for determining the inhalation-resistance of the complete non-powered air-purifying particulate respirator. This value corresponds to the pressure drop across the complete respirator mounted on a test fixture with air drawn inward through it at a continuous rate of 85±2 liters per minute. Tolerance limits have been added to the test flow rates as suggested by commenters.

The final rule does not include final breathing resistance limits as requested in some comments. The final breathing resistances previously included in the 30 CFR part 11 requirements were based on filters loading and clogging with a silica dust. The loading experienced at actual worksites is not represented by such a test. The inclusion of final breathing resistances as part of a certification would primarily address two concerns. The first is that the breathing resistance does not exceed physiological limits or pose undue discomfort on the wearer. Wearers will replace filters before breathing resistances reach such levels. The second concern is that the filter efficiency is still at an acceptable level at the certification final resistance value. The filter efficiency level determination

and respirator classifications provided for in this rule are sufficiently severe to alleviate this concern.

One commenter questioned NIOSH's intent for restricting final inhalation resistance for particulate filters used in conjunction with chemical cartridges. This commenter pointed to § 84.203 requirements which specify maximum allowable final inhalation resistances for these combinations. The final inhalation value is to be measured at the end of the service life tests for the chemical cartridge portion of the combination. NIOSH will continue to measure the initial and final inhalation and exhalation resistances of the combination in conjunction with the service life test of the chemical cartridge. The inhalation and exhalation resistances need not be measured for these combinations in conjunction with the particulate efficiency level determination tests.

Paragraph (b) states the inhalation resistance of the complete respirator is not to exceed 35 millimeters of water-column height. The exhalation resistance of the complete respirator is not to exceed 25 millimeters of water-column height.

The proposed rule would have limited the inhalation and exhalation resistances to 30 and 20 millimeters of water-column height, respectively. Several commenters requested that the values be increased. Increased breathing resistance values will permit the effective use of presently available filter material in respirators re-designed to meet the efficiency level determination tests at a reasonable cost. Others expressed a concern that respirators with higher breathing resistances are less likely to be fitted properly, often intentionally due to the discomfort. Commenters expressed that this may be true in the health-care profession where the use of certified respirators is new.

The final rule has increased the maximum acceptable breathing resistance values slightly from the proposed levels to those suggested by commenters. The proposed resistance levels of 30 and 20 millimeters of water-column height corresponded to the maximum allowable resistance values in part 11 for any particulate respirator. The new resistance levels remain below the acceptable limits for some non-particulate respirator classes under the existing part 11 provision. For example, chemical cartridge respirators, which have use patterns similar to particulate filter respirators, have a maximum initial inhalation resistance of 40 millimeters water-column height. This increase in acceptable breathing resistance for particulate respirators will enable manufacturers to produce respirators meeting the new requirements more expeditiously and at lower cost than the proposal would have allowed. This small increase in maximum allowable breathing resistance for particulate respirators does not add substantially to physiologic burden for respirator users, and will be compensated by increased worker protection provided by the new filter efficiency tests and classification system. The acceptable breathing resistance levels for the non-particulate respirator classes are not affected.

Section 84.181 Non-powered Air-Purifying Particulate Filter Efficiency Level Determination

This section is new and specifies the test criteria and acceptable performance criteria for the new non-powered air-purifying particulate filter efficiency level determination. This section has been retitled from particulate instantaneous-penetration-filter test in response to a comment. The new title more appropriately represents the intent of the tests in this section to determine the efficiency level of the filters.

Paragraph (a) requires the filter efficiency testing of 20 filters of each non-powered air-purifying particulate respirator model. Testing is conducted using a solid sodium chloride or equivalent particulate aerosol for N-series certification or a dioctyl phthalate or equivalent liquid particulate aerosol for R-series and P-series certification.

Paragraph (b) requires the filters, including holders and gaskets; when separable, to be tested mounted on a test fixture in the manner as used on the respirator. This provides for testing of the assembly in a configuration as it will be actually used.

Paragraph (c) describes preconditioning requirements for the 20 N-series filters to be tested. After removal from their packaging, the 20 filters are placed in an environment of 85±5 percent relative humidity at 38±2.5 °C for 25±1 hours. The filters shall be stored in a gas-tight container until tested. Testing for the filter efficiencies must be performed within 10 hours following preconditioning. These preconditioning requirements apply only to N-series filters differing from the proposal which would have had filters of each series subjected to preconditioning.

Paragraph (d) provides for blocking the exhalation valves to ensure that any valve leakage is not included in the filter efficiency level evaluation. This only applies when the filters do not have separable holders and gaskets.

Paragraph (e) specifies the continuous test aerosol flow rates for the filter efficiency testing. Single filters are tested at a rate of 85±4 liters per minute; filters used in pairs are tested at a rate of 42.5 ± 2 liters per minute through each filter.

Paragraph (f) describes the penetration test aerosols and the test criteria to be used. A sodium chloride or equivalent solid aerosol is used when testing for filter efficiency for N-series filters. A neutralized-dioctyl phthalate (DOP), or equivalent oil, liquid aerosol is specified as the testing agent when testing for filter efficiency of R- and P-series filters. For P-series filters, the filter efficiency test will be continued until minimum efficiency is obtained. However, for N- and R-series respirators it will be terminated when an aerosol mass of 200±5 mg has contacted the filter unit, if minimum efficiency has not been obtained.

Paragraph (f)(1) identifies the test conditions for the sodium chloride or equivalent solid aerosol to be at 25±5 °C and relative humidity of 30±10 percent. The aerosol specified to be used in these tests will be neutralized to the Boltzmann equilibrium state, and the maximum concentration will not exceed 200 mg/m^3. The relative humidity of the sodium chloride aerosol has been changed from the proposal in response to a comment. This change, a small increase in the relative humidity of the aerosol, allows testing at the values normally encountered with the test instruments commonly used.

Paragraph (f)(2) specifies the DOP or equivalent oil liquid particulate aerosol. The test conditions for the liquid aerosol are specified to be at 25±5 °C. The aerosol specified to be used in these tests will be neutralized to the Boltzmann equilibrium state, and the maximum concentration will not exceed 200 mg/m^3.

Paragraph (g) specifies the particle size limitations at the test conditions for the filter efficiency test aerosols. The sodium chloride aerosol will have a particle size distribution with count median diameter between 0.075±0.020 micrometer and a standard geometric deviation not exceeding 1.86. The liquid particulate aerosol has a particle size distribution with count median diameter between 0.185±0.020 micrometer and a standard geometric deviation not exceeding 1.60. NIOSH will make these particle size distribution determinations at the specified test conditions with a scanning mobility particle sizer (SMPS) or equivalent. The specification of a scanning mobility particle sizer represents newer technology than the

differential mobility particle sizer that was specified in the proposal. This reference to the newer technology was added in response to comments from the public. NIOSH will accept manufacturer's size verification data determined by SPMS or an equivalent particle sizing instrument that provides particle sizing information consistent with an SPMS.

Paragraph (h) requires the efficiency of the filter (i.e., the amount of aerosol particles that pass through the filter) to be monitored and recorded throughout the test period by a suitable forward-light-scattering photometer or equivalent instrumentation.

Paragraph (i) requires the minimum filter efficiency for each of the 20 filters to be determined and recorded. The minimum efficiency of each tested filter is to be greater than or equal to 99.97% for P100, R100 and N100 filters; 99% for P99, R99 and N99 filters; and 95% for P95, R95 and N95 filters.

Many comments were received on all aspects of the testing requirements. Comments were received regarding the proposed loading levels, test agents, preconditioning requirements, number of filters to be tested, and test equipment specifications.

The proposal included a statistical treatment of the filter efficiency test results (U statistic). Thirty filter samples were to be tested for each certification application. The number of samples tested and the test statistic used in the treatment of the data was intended to provide a 95% confidence interval of 95% conformance (95% tolerance interval) of manufacturers' product to the certification criterion. These methods rely on the applicability of the ''normal'' or Gaussian distribution for test data. A similar statistical treatment of the test data was included in the 1987 NIOSH proposal.

A number of commenters expressed concern with the use of a NIOSH proposed U statistic (based on a 95% tolerance interval for the 95th percentile) to determine if the performance of filters submitted by manufacturers meet the requirements for requested classification (type). Comments concerned the use of the constant 2.22 for the calculation of the U statistic, suggesting that this is too strict a criterion for manufacturers to meet and implying that 95% tolerance intervals based on some lower percentile (e.g., 90th) would be more appropriate. Other comments concerned the distribution assumptions inherent in the calculation of the U statistic. Commenters expressed concern that the assumption that test data represent a sample from a Gaussian distribution is incorrect and that the application of tolerance interval methods for this data is inappropriate.

Other commenters questioned NIOSH's justification to ''knowingly'' allow the certification of respirators that do not meet the performance requirements. They interpreted the statistical criterion as NIOSH accepting up to 5% of the distributed respirators to be less than the stated class minimum. This analysis of the data would imply that some of the distributed certified respirators perform below the inferred minimum performance level of its class. The commenters expressed concern that this would cause an unacceptably large number of workers to have inadequate respirator protection.

One commenter pointed out that the use of the U statistic was an attempt to predict future production variability. This commenter further asserted that respirators submitted for certification testing do not constitute a random sample of a manufacturer's product. Production variability, this commenter continued, is to be controlled by the separate quality control program.

NIOSH concurs with the commenter that the proposed statistical approach addressing pre-market production samples is inconsistent with determining product quality in a controlled process. NIOSH further agrees that the samples submitted for certification testing are not random samples. Therefore, the final rule does not include an acceptance criterion based upon the statistical treatment of test data.

A significant portion of the cost attributed to the proposed regulations (25 to 30% of the cost, by one estimate) resulted from the statistical treatment of data. Manufacturers stated that this cost impact would be reduced if a 95% tolerance interval based on a 90 percentile (i.e., 95% confidence of 90% conformance) were used. Manufacturers and others suggested that a pass/fail criterion should be offered. Several commenters suggested reducing the number of test samples and using a pass/fail criterion.

A pass/fail criterion is consistent with the current respirator acceptance criterion, and is generally accepted as appropriate for a certification program with testing of pre-production units. The pass/fail criterion presents another advantage in that it establishes the minimum acceptable performance level consistent with the class definition. A member of a 95% class will not be in compliance with the certification if it has an efficiency below that level when tested. The statistical test criterion could allow some individual units to have performance test measurements below 95% but still meet certification requirements.

Based on these comments, NIOSH has reconsidered the use of the tolerance interval approach for the analysis of respirator performance data. NIOSH agrees that the application of the tolerance interval approach is inconsistent with type approval and recognizes that respirators submitted for certification do not constitute a random sample of a manufacturer's product. Consequently, the final rule has been modified to test 20 respirators for laboratory performance, with certification if all 20 units meet the specifications.

The proposal specified both sodium chloride (NaCl) as the solid test aerosol and dioctyl phthalate (DOP) as the liquid test aerosol. Although DOP is a suspected carcinogen, the set up of the test instruments precludes laboratory personnel exposure to the aerosol. Sodium chloride does not pose a suspected health hazard. Dioctyl phthalate is the most severe liquid, or degrading test aerosol known. It has been used for decades as the test aerosol for certification of the best (HEPA) part 11 filters. Sodium chloride is a solid test aerosol that provides some degrading characteristics. Sodium chloride has also been used for years as the solid test agent in the European (CEN) certification standards.

No comments were received against the use of NaCl as the solid test aerosol for non-powered respirators. One commenter, a former employee of the Department of Defense, questioned its use because the military does not use it in their mask testing. Another commenter, accepting the use of NaCl, stated that part 84 should allow equivalent test aerosols as well. The only negative comments received to the NaCl test aerosol were due to the difficulties associated with the testing of powered air-purifying respirators (PAPRs). The requirements for PAPRs was discussed previously in V. Discussion of Final Rule, B. Powered Air-Purifying Particulate Respirators.

Commenters interested in the use of certified respirators for protection against TB suggested the use of biological agents (bioaerosols) for the certification testing. It is not necessary to subject filter respirators to a bioaerosol as a condition of certification. By using test aerosols of the most penetrating size range, the efficiency-level determination of the certification testing will be the lowest obtainable for any size aerosol. Therefore, the efficiency level against

any bioaerosol for any certified respirator will meet or exceed the certified efficiency level.

Comments concerning the choice of liquid test aerosols were varied. Several different test agents were suggested including paraffin oil, Emery 3004, and hydrofluoric acid. Paraffin oil was suggested because it is consistent with the European (CEN) standards. The U.S. military has adopted Emery 3004 as a DOP replacement in instantaneous testing of filter efficiency. A commenter suggested that because hydrofluoric acid aerosol is common in many industries, it would be a more realistic test agent.

Each of the suggested alternative liquid aerosols would provide essentially the same initial or lightly loaded filter efficiency levels. The initial efficiency level of a filter is defined primarily by the particle size of the aerosol, not its degrading ability. The CEN standards use paraffin oil as the liquid test aerosol, but the filters are not loaded to a significant level. Emery 3004 has been adopted as a replacement for DOP by the military in initial efficiency testing as performed for the part 11 HEPA filters. Unlike DOP, none of the recommended alternative test aerosols provide severe degrading effects of the filters. This severity is an integral part of the part 84 testing, and addressing the uncertainties of the effects of actual workplace aerosols.

In considering these options, NIOSH is aware that no single test agent is used by every prominent standard-setting agency or organization. The CEN standard uses NaCl as a solid test aerosol. The current draft for revising the ANSI Z88.8 standard proposes NaCl and DOP as the test aerosols. No choice of test aerosol would provide consistency with all other standards, as sought by commenters. A fundamental purpose of the new testing standards is to assure that at least one class of filters is highly resistant to degradation by workplace aerosols. The DOP aerosol was selected for this purpose specifically because of its severe effect on filter efficiency level. The proposed alternatives demonstrate less severe effects on the filter media; therefore, they have been considered inappropriate for the evaluation intended by NIOSH.

The generation method of dioctyl phthalate aerosol was a concern to many commenters. Commenters questioned the particle size distribution for this test aerosol specified in the proposal being greater than that specified in the existing part 11 requirements. Commenters also questioned differences in test results based on the use of thermally generated (hot) or cold-nebulized DOP aerosol. Although the proposal did not specify any aerosol generation technique to be used for DOP testing, much of NIOSH's research used as a basis for the proposal was performed with cold-nebulized DOP and NIOSH testing has demonstrated that correlation in results obtained between the two aerosol generation techniques is possible. Some commenters believed that the DOP aerosol generation method must be specified to ensure reproducible test results. These commenters used data from Industrial Safety Equipment Association-sponsored ''round robin'' testing of mechanical and electrostatic filter material. Complete data and specifics of the round robin testing were not provided to NIOSH. These tests were conducted among the majority of the air-purifying respirator manufacturers that are ISEA members. The test results indicated excellent correlation between the two aerosol generation methods for efficiency of standardized mechanical filter media. For standardized electrostatic media, a divergence in efficiency with increased filter loading was reported between the two aerosol generation methods. These commenters also reported that both the initial and stabilized efficiencies of the electrostatic media correlated well between the two aerosol generation methods. The divergence reported appears to be a different degradation rate between the two aerosols.

Moreover, several of the participants provided some additional insights into the circumstances of the testing. A significant portion of the manufacturers had recently acquired the cold-nebulized test instruments. The reproducibility problems reported, they admitted, could have resulted from operator inexperience. One of the participants with extensive experience with both aerosol generation methods related some of the experience gained by that manufacturer. Excellent correlation is maintained between this commenter's numerous cold-nebulized DOP instruments in use world-wide. Also, the commenter reported having encountered no reproducibility problems between thermally-generated and cold-nebulized instruments in testing electrostatic media when new DOP is used.

In NIOSH testing, some tests have provided good correlation of results between the two aerosol generation methods, while others have not. DOP changes chemically as it ages, becoming less pure. The thermal-generation method induces a similar chemical change, simulating accelerated aging of the DOP. Recent NIOSH testing indicates that the chemically-changed DOP may cause the test instruments to fluctuate from the stated testing parameters. If monitored closely, and kept within the specified parameters, equivalent results are obtained with either aerosol generation method. Therefore, to accommodate these concerns, the final rule specifies a test using a neat cold-nebulized DOP test, or equivalent test. Allowing equivalent test methods permits the use of tests that respirator manufacturers may have already developed. As part of the established certification process, NIOSH evaluates the test results submitted by the applicant by comparing them to the results of NIOSH testing. Any test method yielding results equivalent to the NIOSH testing will be acceptable.

To further address the testing reproducibility concerns expressed by commenters, NIOSH is initiating a program whereby a standard mechanical and electrostatic filter media sample will be made available upon request for applicant correlation testing. NIOSH will run characterization tests on these standardized media and send a data sheet showing the test results with the samples. NIOSH has traditionally conducted correlation testing for applicants requesting such testing to document the agreement of their test instruments and procedures and those of NIOSH. This new procedure will continue the service provided to the applicants of assuring that the results they obtain on their instruments and with their procedures provide results comparable with NIOSH's certification tests. This new process will reduce the NIOSH resource requirements for corroborating the test results of the large number of applicants that NIOSH anticipates will be requesting this service and expedite the correlation process.

Several comments were received on the humidity preconditioning requirement for filters. One commenter stated that the proposed preconditioning time (24 hours) was inadequate to have much of an effect on the performance of electrostatic filter media. The commenter suggested a thirty-day preconditioning period. Information provided regarding the ISEA round-robin testing stated that the effects of the preconditioning were insignificant when testing with the DOP aerosol. This assessment agrees with NIOSH testing experience. The other commenters had concerns that the proposal did not provide: detail regarding uniform preconditioning, the size of the container, the allowable time after conditioning at which filter media must be placed within the container and

the allowable time for the filter to remain within the container until tested.

The final rule has been modified to require only N-series filters be taken out of their packaging and humidity preconditioned prior to filter efficiency level testing at 85±5 percent relative humidity at 38±2.5 °C for 25±1 hours. The final rule states that following the preconditioning, the filters shall be sealed in a gas-tight container and tested within 10 hours. R- and P-series filters do not have to be preconditioned because they are tested against DOP which is much more severe than humidity in regard to reducing filter efficiency. The preconditioning requirement is retained for the N-series filters to address the effect of humidity on the filter's efficiency because the sodium chloride aerosol is less severe than DOP in reducing filter efficiency. The 10-hour limitation on storage of the filters before efficiency testing will eliminate the variability concerns.

The final rule has been modified to specify a scanning mobility particle sizer (SMPS) or equivalent, as recommended by commenters, to be consistent with the latest technology. One commenter suggested a flame photometer be allowed for measurement of sodium chloride. The same commenter also stated that other sizing devices such as the Tyndall Owl have been used for years and should be an acceptable measuring instrument. NIOSH is aware that other instrumentation can provide sizing information that can equate to the values specified in the rule. In specifying the particle size, it is important to identify the technology used in its determination. The differential mobility particle sizer (DMPS) was specified in the proposed rule because this is the technology traditionally used by NIOSH to determine the particle sizes of this test. The use of these other instruments is acceptable and all other such equipment does not have to be specified in the final rule. To make size verification measurements manufacturers may use any particle sizing instrument that provides particle sizing information consistent with an SPMS.

Subpart L—Chemical Cartridge Respirators

Section 84.203 Breathing Resistance Tests; Minimum Requirements

This section is redesignated from existing § 11.162–1. This section is unmodified from the proposal.

It is modified only to delete reference to various classifications, such as paints and pneumoconiosis and fibrous producing dusts, that are no longer appropriate with the introduction of the particulates classification with the new instantaneous-penetration test.

Section 84.206 Particulate Tests; Respirators With Filters; Minimum Requirements; General

This section is redesignated from existing § 11.162–7. This section is unmodified from the proposal. It is modified only to delete reference to various classifications, such as paints and pneumoconiosis and fibrous producing dusts, that are no longer appropriate with the introduction of the particulates classification with the new instantaneous-penetration test.

Subpart KK—Dust, Fume, and Mist; Pesticide; Paint Spray Respirators and Combination Gas Masks

This subpart has been added to continue the part 11 requirements for the existing dust, fume, and mist; pesticide; paint spray respirators and combination gas masks during the transition period to part 84.

These sections are derived from existing 30 CFR part 11, subpart K. They are modified to update them to part 84 section numbers.

This subpart also included the upgraded requirements for PAPRs to include only high efficiency filters (HEPA).

Derivation Table

The following derivation table lists (1) each section number of the final rule (New Section); and (2) the section number of the existing standard from which the proposed standard is derived (Old Section).

DERIVATION TABLE

New section	Old section
42 CFR	30 CFR
84.1	11.1
84.2	11.3
84.3	11.4
84.4	New.
84.10	11.10
84.11	11.11
84.12	11.12
84.20	11.20
84.21	11.21
84.22	11.22
84.30	11.30
84.31	11.31
84.32	11.32
84.33	11.33
84.34	11.34
84.35	11.35
84.36	11.36
84.40	11.40
84.41	11.41
84.42	11.42
84.43	11.43

DERIVATION TABLE—Continued

New section	Old section
84.50	11.50
84.51	11.51
84.52	11.52
84.53	11.53
84.60	11.60
84.61	11.61
84.62	11.62
84.63	11.63
84.64	11.64
84.65	11.65
84.66	11.66
84.70	11.70
84.71	11.71
84.72	11.72
84.73	11.73
84.74	11.74
84.75	11.75
84.76	11.76
84.77	11.77
84.78	11.78
84.79	11.79
84.80	11.79–1
84.81	11.80
84.82	11.81
84.83	11.82
84.84	11.83
84.85	11.84
84.86	11.85–1
84.87	11.85–2
84.88	11.85–3
84.89	11.85–4
84.90	11.85–5
84.91	11.85–6
84.92	11.85–7
84.93	11.85–8
84.94	11.85–9
84.95	11.85–10
84.96	11.85–11
84.97	11.85–12
84.98	11.85–13
84.99	11.85–14
84.100	11.85–15
84.101	11.85–16
84.102	11.85–17
84.103	11.85–18
84.104	11.85–19
84.110	11.90
84.111	11.91
84.112	11.92
84.113	11.93
84.114	11.94
84.115	11.95
84.116	11.96
84.117	11.97
84.118	11.98
84.119	11.99
84.120	11.100
84.121	11.101
84.122	11.102–1
84.123	11.102–2
84.124	11.102–3
84.125	11.102–4
84.126	11.102–5
84.130	11.110
84.131	11.111
84.132	11.112
84.133	11.113
84.134	11.114
84.135	11.115
84.136	11.116
84.137	11.117
84.138	11.118

DERIVATION TABLE—Continued

New section	Old section
84.139	11.119
84.140	11.120
84.141	11.121
84.142	11.122
84.143	11.123
84.144	11.124–1
84.145	11.124–2
84.146	11.124–3
84.147	11.124–4
84.148	11.124–5
84.149	11.124–6
84.150	11.124–7
84.151	11.124–8
84.152	11.124–9
84.153	11.124–10
84.154	11.124–11
84.155	11.124–12
84.156	11.124–13
84.157	11.124–14
84.158	11.124–15
84.159	11.124–16
84.160	11.124–17
84.161	11.124–18
84.162	11.124–19
84.163	11.124–20
84.170	11.130
84.171	11.131
84.172	11.132
84.173	11.133
84.174	11.134
84.175	11.135
84.176	11.136
84.177	11.137
84.178	11.138
84.179	New.
84.180	11.140–9
84.181	New.
84.182	11.140–10
84.190	11.150
84.191	11.151
84.192	11.152
84.193	11.153
84.194	11.154
84.195	11.155
84.196	11.156
84.197	11.157
84.198	11.158
84.199	11.158–1
84.200	11.159
84.201	11.160
84.202	11.161
84.203	11.162–1
84.204	11.162–2
84.205	11.162–3
84.206	11.162–7
84.207	11.162–8
84.250	11.200
84.251	11.201
84.252	11.202
84.253	11.203
84.254	11.204
84.255	11.205
84.256	11.206
84.257	11.207
84.258	11.208
84.1100	New.
84.1101	11.3
84.1102	11.20
84.1103	11.33
84.1130	11.102–4, 11.130, 11.170
84.1131	11.91, 11.131, 11.171

DERIVATION TABLE—Continued

New section	Old section
84.1132	11.95, 11.132, 11.175
84.1133	11.96, 11.133, 11.176
84.1134	11.97, 11.134, 11.177
84.1135	11.98, 11.135, 11.178
84.1136	11.99, 11.136, 11.179
84.1137	11.100, 11.137, 11.180
84.1138	11.101, 11.138, 11.181
84.1139	11.139, 11.182
84.1140	11.140
84.1141	11.140–1
84.1142	11.140–2
84.1143	11.140–3
84.1144	11.140–4
84.1145	11.140–5
84.1146	11.140–6
84.1147	11.140–7
84.1148	11.140–8
84.1149	11.140–9
84.1150	11.140–10
84.1151	11.140–11
84.1152	11.140–12
84.1153	11.102–4
84.1154	11.172, 11.173
84.1155	11.174
84.1156	11.183, 11.183–1, 11.183–3, 11.183–4, 11.183–5, 11.183–6, 11.183–7
84.1157	11.162, 11.162–1, 11.162–4, 11.162–5, 11.162–6, 11.162–8
84.1158	11.162–7

Distribution Table

The following distribution table lists (1) the section number of the existing part 11 standard (Old Section); and (2) each section number of the final rule (New Section).

DISTRIBUTION TABLE

Old section	New section
30 CFR	42 CFR
11.1	84.1
11.2	Removed.
11.2–1	Removed.
11.3	84.2, 84.1101
11.4	84.3
11.10	84.10
11.11	84.11
11.12	84.12
11.20	84.20, 84.1102
11.21	84.21
11.22	84.22
11.30	84.30
11.31	84.31
11.32	84.32
11.33	84.33, 84.1103
11.34	84.34

DISTRIBUTION TABLE—Continued

Old section	New section
11.35	84.35
11.36	84.36
11.40	84.40
11.41	84.41
11.42	84.42
11.43	84.43
11.50	84.50
11.51	84.51
11.52	84.52
11.53	84.53
11.60	84.60
11.61	84.61
11.62	84.62
11.63	84.63
11.64	84.64
11.65	84.65
11.66	84.66
11.70	84.70
11.71	84.71
11.72	84.72
11.73	84.73
11.74	84.74
11.75	84.75
11.76	84.76
11.77	84.77
11.78	84.78
11.79	84.79
11.79–1	84.80
11.80	84.81
11.81	84.82
11.82	84.83
11.83	84.84
11.84	84.85
11.85	Removed.
11.85–1	84.86
11.85–2	84.87
11.85–3	84.88
11.85–4	84.89
11.85–5	84.90
11.85–6	84.91
11.85–7	84.92
11.85–8	84.93
11.85–9	84.94
11.85–10	84.95
11.85–11	84.96
11.85–12	84.97
11.85–13	84.98
11.85–14	84.99
11.85–15	84.100
11.85–16	84.101
11.85–17	84.102
11.85–18	84.103
11.85–19	84.104
11.90	84.110
11.91	84.111, 84.1131
11.92	84.112
11.93	84.113
11.94	84.114
11.95	84.115, 84.1132
11.96	84.116, 84.1133
11.97	84.117, 84.1134
11.98	84.118, 84.1135
11.99	84.119, 84.1136
11.100	84.120, 84.1137
11.101	84.121, 84.1138
11.102	Removed.
11.102–1	84.122
11.102–2	84.123
11.102–3	84.124
11.102–4	84.125, 84.1130, 84.1153
11.102–5	84.126

DISTRIBUTION TABLE—Continued

Old section	New section
11.110	84.130
11.111	84.131
11.112	84.132
11.113	84.133
11.114	84.134
11.115	84.135
11.116	84.136
11.117	84.137
11.118	84.138
11.119	84.139
11.120	84.140
11.121	84.141
11.122	84.142
11.123	84.143
11.124	Removed.
11.124–1	84.144
11.124–2	84.145
11.124–3	84.146
11.124–4	84.147
11.124–5	84.148
11.124–6	84.149
11.124–7	84.150
11.124–8	84.151
11.124–9	84.152
11.124–10	84.153
11.124–11	84.154
11.124–12	84.155
11.124–13	84.156
11.124–14	84.157
11.124–15	84.158
11.124–16	84.159
11.124–17	84.160
11.124–18	84.161
11.124–19	84.162
11.124–20	84.163
11.124–21	Removed.
11.124–22	Removed.
11.124–23	Removed.
11.124–24	Removed.
11.130	84.170, 84.1130
11.131	84.171, 84.1131
11.132	84.172, 84.1132
11.133	84.173, 84.1133
11.134	84.174, 84.1134
11.135	84.175, 84.1135
11.136	84.176, 84.1136
11.137	84.177, 84.1137
11.138	84.178, 84.1138
11.139	84.1139
11.140	84.1140
11.140–1	84.1141
11.140–2	84.1142
11.140–3	84.1143
11.140–4	84.1144
11.140–5	84.1145
11.140–6	84.1146
11.140–7	84.1147
11.140–8	84.1148
11.140–9	84.180, 84.1149
11.140–10	84.182, 84.1150
11.140–11	84.1151
11.140–12	84.1152
11.150	84.190
11.151	84.191
11.152	84.192
11.153	84.193
11.154	84.194
11.155	84.195
11.156	84.196
11.157	84.197
11.158	84.198
11.158–1	84.199

DISTRIBUTION TABLE—Continued

Old section	New section
11.159	84.200
11.160	84.201
11.161	84.202
11.162	84.1157
11.162–1	84.203, 84.1157
11.162–2	84.204
11.162–3	84.205
11.162–4	84.1157
11.162–5	84.1157
11.162–6	84.1157
11.162–7	84.206, 84.1158
11.162–8	84.207, 84.1157
11.170	84.1130
11.171	84.1131
11.172	84.1154
11.173	84.1154
11.174	84.1155
11.175	84.1132
11.176	84.1133
11.177	84.1134
11.178	84.1135
11.179	84.1136
11.180	84.1137
11.181	84.1138
11.182	84.1139
11.183	84.1156
11.183–1	84.1156
11.183–2	Removed.
11.183–3	84.1156
11.183–4	84.1156
11.183–5	84.1156
11.183–6	84.1156
11.183–7	84.1156
11.200	84.250
11.201	84.251
11.202	84.252
11.203	84.253
11.204	84.254
11.205	84.255
11.206	84.256
11.207	84.257
11.208	84.258

VII. Executive Order 12866 and Regulatory Flexibility Act

Section 1 of Executive Order 12866 requires that before promulgating a new regulation, an agency must weigh many competing factors. In particular, the agency must assess the need for the regulation, identify and assess alternatives, determine whether the regulation is designed to achieve the agency's objectives in the most cost-effective manner, and, to the extent feasible, use performance standards. In addition, Section 5 of the Order requires an assessment of the burden imposed by existing regulations, to identify those that have become unjustified or unnecessary as a result of changed circumstances. The Regulatory Flexibility Act (the Act) also requires that the agency periodically review existing regulations and consider reforming those that burden small entities, taking into account the degree to which technology or other factors have changed in the area affected by the rule. NIOSH is promulgating these regulatory changes in compliance with both sections of the Executive Order and the Act.

Dose-response data are inadequate to permit a quantitative description of the risks that would be faced by American workers if respirators were not used. Neither are there dose-response data that can support a quantitative description of the risk reduction that will be achieved by the revised filter performance standards in 42 CFR part 84. Employers frequently lack the economic means or the technical expertise to make detailed workplace hazard assessments. For the great majority of occupational settings, environmental data on the airborne concentrations of toxic materials are completely lacking. When exposure data are available, they tend to be limited at best. Consequently, it is difficult to establish quantitative exposure-response relationships. Most often, occupational exposure data demonstrate the association between exposure and response, but do not support a precise exposure-response curve. Extrapolation from exposure to dose is subject to even greater uncertainty. The variability in exposure between and within workplaces, exposures over long working lifetimes, possibly inconsistent or improper use of respiratory protection, and undetected episodes of substandard respirator performance, among other factors, all make it very difficult to determine what a worker's dose may be even if there are measured exposure levels.

Employers, both large and small, rely upon respirators to protect their employees from airborne toxic contaminants. The preferred and most effective means of protecting workers is to prevent hazards entering their breathing zone in the first place, but it is not technologically or economically feasible in all instances to reduce airborne concentrations to safe levels. In those workplaces, respiratory protection is required to minimize workers' risks of acute and chronic health effects. Although the incremental risk reduction associated with this rulemaking cannot be quantified, it is evident that increased filtering efficiency and enhanced filter reliability must increase the margin of safety for respirator users.

As the last, and occasionally the only, defense against some acute and chronic health hazards at work it is important that respirators be reliable and that they perform in the manner and to the extent the user and employer expect. If respirators fail to perform as expected, the user will be at greatly increased risk of suffering serious, sometimes fatal,

occupational disease or injury. In most circumstances the respirator user has no way of knowing if respirator performance is substandard. Except for the most acute responses to substandard respirator performance, it is not possible to attribute health effects to a failure of respiratory protection. Most of the serious occupational diseases have long latency periods, so respirator users typically would not know if they used an inferior device. Even the relationship to workplace exposures can be obscured because of the presumption that respirators provide effective protection.

Respriator purchasers and users expect and deserve to be able to select respirators with complete confidence that they will perform with a specific efficiency for a specific purpose. They rely on the NIOSH, formerly MSHA/NIOSH, performance standards and certification program to assure them that they can have that confidence.

These new particulate filter efficiency tests are needed to reduce potential health risks that may result from leakage of small particulates through some filters certified under the current regulations (30 CFR part 11). For over a decade the filter penetration tests contained in 30 CFR part 11 have been known to be deficient. Leakage of small aerosols has been recognized as a problem that could be corrected only by revising that regulation.

The magnitude of the filter leakage problem came into sharper focus in the early 1990's when NIOSH and other researchers used modern methods not available under the provisions of part 11 to measure performance over a range of particle sizes. For certain models, leakages higher than 50% were found. Not all respirator models exhibit this high level of leakage, but 30 CFR part 11 testing does not distinguish adequate from inadequate filters.

The respirator community acknowledges filter leakage to be a problem. The American National Standards Institute (ANSI) Z88.2–1992 national standard, for example, states that 2 of the 3 types of particulate respirators certified under 30 CFR part 11 should be used only when the workplace particulate contaminant is know to have a mass median aerodynamic diameter (MMAD) greater that 2 micrometer.

Compliance with aerosol size limitations such as those of the ANSI Z88.2 would represent a major technologic and economic burden for respirator users. Those burdens are great even for the largest employers and exceed the capacity of smaller employers. Adequate worker protection with DM and DFM respirators certified under 30 CFR part 11 can be assured only if employers conduct sophisticated and expensive measurements of the size distribution of the aerosol in each workplace. This is simply too expensive for the great majority of respirator users, who may elect to use DM or DFM respirators without evaluating aerosols in their workplaces, thereby placing their workers at increased risk of occupational disease or disability. The only alternative at present is for those employers to provide costly high efficiency (HEPA) filters. The difficult and costly aerosol size measurements are not needed when HEPA filters are used because they are tested with the most penetrating size of aerosol. HEPA filters are therefore known to be effective against any aerosol regardless of size.

The new 42 CFR part 84 filter efficiency tests use only the most penetrating aerosol size, so all filters certified under these new procedures will be effective against any size aerosol. This new rule thereby corrects an acknowledged deficiency in existing filter efficiency tests, removes from the workplace respirators that fail to deliver the expected degree of worker protection, relieves employers of the need to perform costly and difficult measurements of aerosol size distribution, and provides alternatives to the expensive HEPA filters in workplaces where the aerosol size is either unknown or is known to be small.

This new rule continues to limit, as does the current 30 CFR part 11, the breathing resistance (inhalation and exhalation resistance) of the respirator. Breathing resistance is significant to respirator wearers in three ways. First, higher breathing resistance increases leakage at the face seal of the respirator. Face seal leakage is directly proportional to breathing resistance, other factors being equal. Second, respirators with lower breathing resistance are more comfortable and more acceptable to wearers. If a respirator is uncomfortable to wear, workers are less inclined to use their respirator as often as they should. Third, high breathing resistance can be an unacceptable physiological burden on some workers. For a worker with impaired pulmonary or cardiovascular function, high breathing resistance may make respirator use impossible. In this rule, NIOSH has increased the allowable inhalation and exhalation resistance in consideration of minimizing economic impact, but NIOSH has maintained the breathing resistance at a level that still will minimize adverse impacts on the respirator user.

E.O. 12866 further requires the agency to determine whether the proposed rule is ''economically significant'' (e.g., it does not have an annual effect on the economy of $100 million). NIOSH generally prepares a regulatory flexibility analysis, in accordance with the Act, if the rule is expected to have a significant impact on a substantial number of small entities. NIOSH does not believe that this final rule will have an annual impact on the economy of $100 million, nor does NIOSH believe that the rule will have a significant impact on a substantial number of small firms.

This regulatory change affects only particulate respirators. A total of 56 manufacturers hold respirator approvals, and 33 of these hold approvals for particulate respirators. Based on inquiries received, NIOSH believes that several additional manufacturers are planning to submit applications for particulate filter products under this new regulation.

Data are not available to define company size, market share, or diversity of products for the current approval-holders. Projections of impact are based on an understanding of manufacturers—dependence on existing approved particulate respirators. Of the 33 manufacturers that have particulate filer approvals, 24 hold additional approvals for devices other than particulate respirators, and nine have only particulate filter approvals. One of these manufacturer holds approvals for DM, DFM and HEPA respirators, while the remaining eight each hold only a single particulate filter approval. Because all existing HEPA filters are expected to pass the new certification tests, it appears that only eight of 56 respirator manufacturers might be dependent upon particulate filter respirators possibly at risk of not passing the new certification tests without redesign. At least one of these eight manufacturers commented favorably on this proposed rule, indicating readiness to meet these new criteria.

Any manufacturer that cannot meet the new criteria immediately will have three years in which to develop new products or face removal from the approved respirator market. However, loss of approved respirator status does not prohibit sales of the devices as non-approved units. The non-approved respirator market appears to be very lucrative, with several of the larger manufacturers participating. Non-approved respirators are sold in many retail outlets including hardware, auto supply, and department stores. Consumers purchase these devices for use against nuisance dusts while

performing various home and hobby-related activities.

While some current respirator manufacturers may experience negative impacts, other manufacturers that are not now approval holders have indicated an intention to enter this market. The new rule thus will stimulate competition as new technologies are introduced and new markets are developed. Furthermore, this rule enhances the ability of domestic manufacturers to compete globally, especially in the European Community. NIOSH expects to see more new approval holders develop as a result of the new rule.

A high percentage of the respirator manufacturers are large corporations or subsidiaries and are international in nature, although several employ 100 or fewer persons. NIOSH does not have an estimate of the total number employed by the 33 manufacturers of particulate respirators. Neither does NIOSH have any indication of how many employees are engaged solely in the manufacture of particulate respirators. However, the respirator manufacturing industry in general is mature and stable. A 1982 survey of the industry performed for NIOSH covered 29 firms that were active at that time, the majority of which continue to manufacture respirators in 1995. Of these, 12 were subsidiaries of larger firms. Median total employment was 375. A large portion of these workers were believed to be engaged in activities unrelated to particulate respirator manufacturing. Sales figures indicated respirator sales ranged from less than 1% to 10–15% of total corporate sales.

NIOSH believes the industry profile remains basically the same it was in 1982. That is, respirators do not represent the primary source of sales income for any of the manufacturers that will be affected. Because respirators represent a low percentage of overall sales, the percentage of total employees involved in the manufacture of respirators is believed also to be low. Therefore, few employees are likely to be severely impacted by the new rule. Indeed, the increased competition and opening of markets expected to result from the rule may well enhance aggregate employment for both current and new approval holders.

Most employers rely on government standards to determine acceptable levels of respirator performance. It would be inefficient and unreasonably costly for each of millions of occasional purchasers of these inexpensive devices to independently attempt to determine which devices operate effectively to filter out submicron toxic particles.

This rule removes a regulatory impediment to the improved design of respirators by substituting a performance standard for an obsolete specifications standard. The practical effect of this will be to enable firms to substitute a more effective and efficient filter material in lower-cost respirators. Respirators already using high efficiency filters meeting 30 CFR part 11 requirements will not be affected by this proposal. These respirators will not require modification to be certified under this final rule, although the certification may not be at the new P100 efficiency level. Although the category of performance may be reduced from the previous HEPA rating, no design or development costs are associated with the certification of these products.

NIOSH received limited responses to its request for comments and data for projected estimates of cost for materials and labor for these improved respirators. Several respirator manufacturers referred to a survey conducted by their trade association as suggesting that costs of this module would exceed $100 million, but specific cost estimates for this module were not provided. The trade association reported that their estimate was based largely on the surveyed manufacturers' projections of procuring new equipment, procuring new materials, plant retooling, and the like. The largest manufacturer of respirators did not project the same cost impact on its products, even though that manufacturer recommended changing the proposed rule to eliminate the least costly class of proposed respirators and to increase the severity of two testing parameters. Another manufacturer stated that the ''projected increased user cost for disposables of 42 CFR part 84 would be between $440 and $990 million,'' based solely on impacts to that manufacturer's products. This manufacturer forecast that prices to end users would rise by 1.7- to 2.9-fold or 9- to 16-fold depending on filter type.

Very limited data were submitted in support of any of these estimates, but it appears that the large discrepancy between NIOSH and industry cost estimates are attributable to 3 principal factors:

(1) Cost estimates by industry included many capital investmet costs rather than recurring annual costs, inclusion of which improperly inflated the annual cost projections.

(2) An erroneous assumption made by the manufacturer projecting the greatest cost impact. That manufacturer assumed that the proposed fit test would require all disposable respirators to have an elastomeric flange. Additional costs attributed to consumer reaction to this assumption were:

(a) expensive reusable elastomeric cartridge respirators replacing inexpensive disposable models, and

(b) costly respirator maintenance and training programs associated with reusable respirators.

Neither NIOSH nor other manufacturers projected either of these as a consequence of the fit testing. In any event, the requirement for fit testing was eliminated from the final rule. That represents a cost saving in itself but this change also renders moot the question of elastomeric flanges for disposable respirators.

(3) Two additional elements of the proposed rule were identified as having significant cost impact: statistical evaluation of certification test results and limitations on inhalation/exhalation resistance. These were changed in the final rule to eliminate the statistical criterion and to adopt the inhalation/exhalation resistance levels requested by the manufacturers. As a result and as discussed below under specific topics, NIOSH does not believe that this rule will approach the $100 million threshold. In fact, NIOSH believes that over time manufacturers' costs and prices to users will fall.

Commenters stated that the statistical treatment of test data as included in the proposal would ''add greatly to the cost of filters and respirators.'' One commenter estimated that the added manufacturing and waste costs attributable to this provision would be 25–30% of the costs attributable to the proposal. According to the commenters, the replacement of the proposed statistical treatment of test data with the less stringent statistical treatment proposed by NIOSH in 1987 or a pass/fail criterion would remove the added cost implications of the proposed rule.

As discussed previously, NIOSH has replaced the proposed requirement for the statistical treatment of test data with the recommended pass-fail criterion. Twenty filters are to be tested, reduced from 30 to be required under the proposal. This change in the final rule, based on technical concerns discussed previously, will significantly reduce the cost implications of the final rule from the estimated costs of the proposal.

The fit test requirements proposed under §§ 84.181 and 84.182 were identified as another source of a significant portion of the costs attributed to the proposed rule. The increased costs resulted from the interpretation that the isoamyl acetate testing would necessitate elastomeric inner flanges to be added to all certified disposable respirators in all categories.

This interpretation led to two conclusions that increased the cost estimates. The first conclusion was that all disposable filter respirators would need to be redesigned to include a costly elastomeric facepiece. The estimated increased costs of disposable respirators led to the second conclusion that the currently inexpensive and widely used disposable particulate respirators would be replaced by costly reusable elastomeric cartridge masks. This increased use of reusable masks was estimated to increase users' costs of respirator maintenance and training programs not associated with disposable respirators. The costs associated with the use of an isoamyl acetate represented a substantial portion of the projected cost impact of the proposed rule.

As discussed earlier, NIOSH has reconsidered the proposed requirement for isoamyl acetate fit-testing of these respirators. Based on technical considerations, the isoamyl acetate tests have not been included in the final rule. NIOSH anticipates that currently accepted, fit-testing procedures will continue to be used to assure a proper respirator-to-face seal for each respirator user. Based on prior experience with currently certified disposable respirators using these procedures, no redesign of the facepiece seal of disposable respirators will be required as a result of this final rule. Therefore, the cost implications attributed to the isoamyl acetate fit tests are not applicable to this final rule.

It is our understanding that substituting better filter material will have negligible effects on the costs of filters, over the long run. The material costs may be slightly increased, but are relatively small compared to those estimates for statistical evaluation and fit testing. The costs associated with these latter two have been greatly reduced by the requirements in the final rule.

The demonstrated level of performance for filters will be substantially more effective. Instead of an efficiency rate of 95 percent for removing particles sized at 1 to 2 micrometers in diameter, they will demonstrate the ability to remove particles of less than 1 micrometer in diameter at a typical efficiency rate of 95 to 99.97 percent. The importance of this change will vary considerably from workplace setting to setting. However, in at least some settings the benefits will be considerable.

For example, the classes of particulate filter respirators certified under this rule will meet or exceed the recommendations for respiratory protective devices used for M. tuberculosis. Of the currently NIOSH-certified respirators, only high-efficiency particulate air (HEPA) filters meet or exceed these recommendations. The certification to an enhanced performance level will create options for the choice of respirators that adhere to the recommendations at reduced expense. A disposable (one-time use) HEPA filter respirator generally sells for around $7 to $10 and replaceable respirators equipped with HEPA filters can cost $20 or more, with replacement filters costing about $5 each. Replacement non-HEPA filters cost about $1 to $2 each. Disposable non-HEPA filters cost about $1 to $8 each when purchased in bulk. Costs for a N95 filter are expected to be less than those of a current HEPA filter. Applications of new filter technologies and market competition is expected to generally have the impact of reducing the cost of the new respirators. At least one commenter has already indicated that the 95% efficiency level respirators will be priced not exceeding the cost of 30 CFR part 11 disposable DFM respirators, $5 to $8 each.

NIOSH would expect similar effects—both improved health and cost avoidance—in many other settings. NIOSH estimates that as many as seven million workers use respirators at some time each year. NIOSH estimates that employers annually purchase over 110 million disposable respirators.

There are approximately 35 manufacturers of these respiratory devices. Most of these already possess or have access to test equipment needed to perform the new filter tests. As is currently required under 30 CFR part 11, NIOSH will continue to require that applicants conduct or have conducted examinations, inspections, and tests of respirator performance at least equivalent to those set by the respirator certification tests. This is to assure that all necessary research and development is conducted by the applicant prior to submitting an application to the Federal Government for testing of the respirator by NIOSH. For those manufacturers that do not currently possess this capability, NIOSH estimates that the purchase of this equipment represents an investment of approximately $60,000. Amortized over time, this would not represent a significant cost for most manufacturers.

Commenters indicated that the projected costs of new, updated test instruments for the filter efficiency testing contributed significantly to the costs reported to be attributable to the proposed rule. NIOSH agrees that if manufacturers opt to purchase newly developed instruments, this represents a significant investment. As discussed previously, the filter efficiency tests of this final rule can be conducted using the instrumentation previously specified for the testing of high efficiency filters under 30 CFR part 11. Therefore, the purchase of new test instruments is not required for most manufacturers. Further, the purchase of test instruments represents a capital investment amortized over time, not an annual recurring cost.

Filter materials are currently available that can be substituted into present filter designs with minimal redesign (if any) to meet the performance requirements of the new tests. Some currently NIOSH-certified respirators have, when tested using the new standards, demonstrated acceptable performance. Therefore, little or no cost will be needed to develop suitable filtration materials or redesign existing devices. However, NIOSH does realize that additional development and redesign costs may be incurred to augment the presently available products. NIOSH specifically requested relevant data and comments on projected costs of redesign of respirators.

One commenter cited the cost of commercially available filter media to meet the proposed standards as dramatically increased over the present cost of the existing 30 CFR part 11 disposable dust/mist requirements. The cost of present dust/mist media was stated as between 60 cents and one dollar per square yard, whereas the cost of commercially available filter media to meet the proposed 42 CFR part 84 requirements is between 12 dollars and 17 dollars per square yard, depending on the type (A, B, or C), and whether it is for the ''solids'' or ''liquid/solids'' category. Two other commenters indicated the availability of prototype respirators and filters that could be marketed for little or no cost increase from existing dust/fume/mist respirators and filters.

Several comments were received stating that the combination of proposed initial inhalation and exhalation resistance limits and efficiency levels might require increasing the surface area of filters. It was asserted that an increase in filter surface area to meet these requirements would ''increase substantially the raw material and manufacturing costs of respirator protection.'' For the technical reasons discussed previously, the initial inhalation and exhalation resistances have been increased in the final rule to the values recommended by these commenters. Adoption of these values will allow ''latitude to develop filters at

a reasonable cost without compromising safety or comfort to the user,'' according to the comments.

In summary, NIOSH did not believe the proposed rule change was ''economically significant'' within the definition of E.O. 12866 based on the cost projections attributable to the proposal that were provided to NIOSH and those modifications incorporated into the final rule.

Notwithstanding these general conclusions, there may be some manufacturers that will find it financially difficult, or a poor investment, to meet the new standards. NIOSH expects such problems to result from free market competition rather than the specific standards of these final regulations. That is, most knowledgeable employers would purchase more cost-effective respirators voluntarily and force major changes in the market if the present regulatory barriers were removed.

List of Subjects in 42 CFR Part 84

Administrative practice and procedure, Incorporation by reference, Labeling, Mine safety and health, Occupational safety and health, Personal protective equipment, Reporting and recordkeeping requirements, Respirators.

Dated: April 14, 1995.

Philip R. Lee,

Assistant Secretary for Health.

Dated: April 14, 1995.

Donna E. Shalala,

Secretary.

For the reasons set out in the preamble, 42 CFR part 84 is added to read as follows:

PART 84—APPROVAL OF RESPIRATORY PROTECTIVE DEVICES

Subpart A—General Provisions

Sec.
84.1 Purpose.
84.2 Definitions.
84.3 Respirators for mine rescue or other emergency use in mines.

Subpart B—Application for Approval

84.10 Application procedures.
84.11 Contents of application.
84.12 Delivery of respirators and components by applicant; requirements.

Subpart C—Fees

84.20 Examination, inspection, and testing of complete respirator assemblies; fees.
84.21 Examination, inspection, and testing of respirator components or subassemblies; fees.
84.22 Unlisted fees; additional fees; payment by applicant prior to approval.

Subpart D—Approval and Disapproval

84.30 Certificates of approval; scope of approval.
84.31 Certificates of approval; contents.
84.32 Notice of disapproval.
84.33 Approval labels and markings; approval of contents; use.
84.34 Revocation of certificates of approval.
84.35 Changes or modifications of approved respirators; issuance of modification of certificate of approval.
84.36 Delivery of changed or modified approved respirator.

Subpart E—Quality Control

84.40 Quality control plans; filing requirements.
84.41 Quality control plans; contents.
84.42 Proposed quality control plans; approval by the Institute.
84.43 Quality control records; review by the Institute; revocation of approval.

Subpart F—Classification of Approved Respirators; Scope of Approval; Atmospheric Hazards; Service Time

84.50 Types of respirators to be approved; scope of approval.
84.51 Entry and escape, or escape only; classification.
84.52 Respiratory hazards; classification.
84.53 Service time; classification.

Subpart G—General Construction and Performance Requirements

84.60 Construction and performance requirements; general.
84.61 General construction requirements.
84.62 Component parts; minimum requirements.
84.63 Test requirements; general.
84.64 Pretesting by applicant; approval of test methods.
84.65 Conduct of examinations, inspections, and tests by the Institute; assistance by applicant; observers; recorded data; public demonstrations.
84.66 Withdrawal of applications; refund of fees.

Subpart H—Self-Contained Breathing Apparatus

84.70 Self-contained breathing apparatus; description.
84.71 Self-contained breathing apparatus; required components.
84.72 Breathing tubes; minimum requirements.
84.73 Harnesses; installation and construction; minimum requirements.
84.74 Apparatus containers; minimum requirements.
84.75 Half-mask facepieces, full facepieces, mouthpieces; fit; minimum requirements.
84.76 Facepieces; eyepieces; minimum requirements.
84.77 Inhalation and exhalation valves; minimum requirements.
84.78 Head harnesses; minimum requirements.
84.79 Breathing gas; minimum requirements.
84.80 Interchangeability of oxygen and air prohibited.
84.81 Compressed breathing gas and liquefied breathing gas containers; minimum requirements.
84.82 Gas pressure gages; minimum requirements.
84.83 Timers; elapsed time indicators; remaining service life indicators; minimum requirements.
84.84 Hand-operated valves; minimum requirements.
84.85 Breathing bags; minimum requirements.
84.86 Component parts exposed to oxygen pressures; minimum requirements.
84.87 Compressed gas filters; minimum requirements.
84.88 Breathing-bag test.
84.89 Weight requirement.
84.90 Breathing resistance test; inhalation.
84.91 Breathing resistance test; exhalation.
84.92 Exhalation valve leakage test.
84.93 Gas flow test; open circuit apparatus.
84.94 Gas flow test; closed circuit apparatus.
84.95 Service-time test; open circuit apparatus.
84.96 Service-time test; closed circuit apparatus.
84.97 Test for carbon dioxide in inspired gas; open- and closed-circuit apparatus; maximum allowable limits.
84.98 Tests during low temperature operation.
84.99 Man tests; testing conditions; general requirements.
84.100 Man tests 1, 2, 3, and 4; requirements.
84.101 Man test 5; requirements.
84.102 Man test 6; requirements.
84.103 Man tests; performance requirements.
84.104 Gas tightness test; minimum requirements.

Tables to Subpart H of Part 84

Subpart I—Gas Masks

84.110 Gas masks; description.
84.111 Gas masks; required components.
84.112 Canisters and cartridges in parallel; resistance requirements.
84.113 Canisters and cartridges; color and markings; requirements.
84.114 Filters used with canisters and cartridges; location; replacement.
84.115 Breathing tubes; minimum requirements.
84.116 Harnesses; installation and construction; minimum requirements.
84.117 Gas mask containers; minimum requirements.
84.118 Half-mask facepieces, full facepieces, and mouthpieces; fit; minimum requirements.
84.119 Facepieces; eyepieces; minimum requirements.
84.120 Inhalation and exhalation valves; minimum requirements.
84.121 Head harnesses; minimum requirements.
84.122 Breathing resistance test; minimum requirements.
84.123 Exhalation valve leakage test.
84.124 Facepiece tests; minimum requirements.

84.125 Particulate tests; canisters containing particulate filters; minimum requirements.
84.126 Canister bench tests; minimum requirements.

Tables to Subpart I of Part 84

Subpart J—Supplied-Air Respirators

84.130 Supplied-air respirators; description.
84.131 Supplied-air respirators; required components.
84.132 Breathing tubes; minimum requirements.
84.133 Harnesses; installation and construction; minimum requirements.
84.134 Respirator containers; minimum requirements.
84.135 Half-mask facepieces, full facepieces, hoods, and helmets; fit; minimum requirements.
84.136 Facepieces, hoods, and helmets; eyepieces; minimum requirements.
84.137 Inhalation and exhalation valves; check valves; minimum requirements.
84.138 Head harnesses; minimum requirements.
84.139 Head and neck protection; supplied-air respirators; minimum requirements.
84.140 Air velocity and noise levels; hoods and helmets; minimum requirements.
84.141 Breathing gas; minimum requirements.
84.142 Air supply source; hand-operated or motor driven air blowers; Type A supplied-air respirators; minimum requirements.
84.143 Terminal fittings or chambers; Type B supplied-air respirators; minimum requirements.
84.144 Hand-operated blower test; minimum requirements.
84.145 Motor-operated blower test; minimum requirements.
84.146 Method of measuring the power and torque required to operate blowers.
84.147 Type B supplied-air respirator; minimum requirements.
84.148 Type C supplied-air respirator, continuous-flow class; minimum requirements.
84.149 Type C supplied-air respirator, demand and pressure demand class; minimum requirements.
84.150 Air-supply line tests; minimum requirements.
84.151 Harness test; minimum requirements.
84.152 Breathing tube test; minimum requirements.
84.153 Airflow resistance test, Type A and Type AE supplied-air respirators; minimum requirements.
84.154 Airflow resistance test; Type B and Type BE supplied-air respirators; minimum requirements.
84.155 Airflow resistance test; Type C supplied-air respirator, continuous flow class and Type CE supplied-air respirator; minimum requirements.
84.156 Airflow resistance test; Type C supplied-air respirator, demand class; minimum requirements.
84.157 Airflow resistance test; Type C supplied-air respirator, pressure-demand class; minimum requirements.
84.158 Exhalation valve leakage test.
84.159 Man tests for gases and vapors; supplied-air respirators; general performance requirements.
84.160 Man tests for gases and vapors; Type A and Type AE respirators; test requirements.
84.161 Man tests for gases and vapors; Type B and Type BE respirators; test requirements.
84.162 Man test for gases and vapors; Type C respirators, continuous-flow class and Type CE supplied-air respirators; test requirements.
84.163 Man test for gases and vapors; Type C supplied-air respirators, demand and pressure-demand classes; test requirements.

Tables to Subpart J of Part 84

Subpart K—Non-Powered Air-Purifying Particulate Respirators

84.170 Non-powered air-purifying particulate respirators; description.
84.171 Non-powered air-purifying particulate respirators; required components.
84.172 Breathing tubes; minimum requirements.
84.173 Harnesses; installation and construction; minimum requirements.
84.174 Respirator containers; minimum requirements.
84.175 Half-mask facepieces, full facepieces, hoods, helmets, and mouthpieces; fit; minimum requirements.
84.176 Facepieces, hoods, and helmets; eyepieces; minimum requirements.
84.177 Inhalation and exhalation valves; minimum requirements.
84.178 Head harnesses; minimum requirements.
84.179 Non-powered air-purifying particulate respirators; filter identification.
84.180 Airflow resistance tests.
84.181 Non-powered air-purifying particulate filter efficiency level determination.
84.182 Exhalation valve leakage test; minimum requirements.

Subpart L—Chemical Cartridge Respirators

84.190 Chemical cartridge respirators; description.
84.191 Chemical cartridge respirators; required components.
84.192 Cartridges in parallel; resistance requirements.
84.193 Cartridges; color and markings; requirements.
84.194 Filters used with chemical cartridges; location; replacement.
84.195 Breathing tubes; minimum requirements.
84.196 Harnesses; installation and construction; minimum requirements.
84.197 Respirator containers; minimum requirements.
84.198 Half-mask facepieces, full facepieces, mouthpieces, hoods, and helmets; fit; minimum requirements.
84.199 Facepieces, hoods, and helmets; eyepieces; minimum requirements.
84.200 Inhalation and exhalation valves; minimum requirements.
84.201 Head harnesses; minimum requirements.
84.202 Air velocity and noise levels; hoods and helmets; minimum requirements.
84.203 Breathing resistance test; minimum requirements.
84.204 Exhalation valve leakage test; minimum requirements.
84.205 Facepiece test; minimum requirements.
84.206 Particulate tests; respirators with filters; minimum requirements; general.
84.207 Bench tests; gas and vapor tests; minimum requirements; general.

Tables to Subpart L of Part 84

Subpart M—[Reserved]

Subpart N—Special Use Respirators

84.250 Vinyl chloride respirators; description.
84.251 Required components.
84.252 Gas masks; requirements and tests.
84.253 Chemical-cartridge respirators; requirements and tests.
84.254 Powered air-purifying respirators; requirements and tests.
84.255 Requirements for end-of-service-life indicator.
84.256 Quality control requirements.
84.257 Labeling requirements.
84.258 Fees.

Subparts O through JJ [Reserved]

Subpart KK—Dust, Fume, and Mist; Pesticide; Paint Spray; Powered Air-Purifying High Efficiency Respirators and Combination Gas Masks

84.1100 Scope and effective dates.
84.1101 Definitions.
84.1102 Examination, inspection and testing of complete respirator assemblies; fees.
84.1103 Approval labels and markings; approval of contents; use.
84.1130 Respirators; description.
84.1131 Respirators; required components.
84.1132 Breathing tubes; minimum requirements.
84.1133 Harnesses; installation and construction; minimum requirements.
84.1134 Respirator containers; minimum requirements.
84.1135 Half-mask facepieces, full facepieces, hoods, helmets, and mouthpieces; fit; minimum requirements.
84.1136 Facepieces, hoods, and helmets; eyepieces; minimum requirements.
84.1137 Inhalation and exhalation valves; minimum requirements.
84.1138 Head harnesses; minimum requirements.
84.1139 Air velocity and noise levels; hoods and helmets; minimum requirements.
84.1140 Dust, fume, and mist respirators; performance requirements; general.
84.1141 Isoamyl acetate tightness test; dust, fume, and mist respirators designed for respiratory protection against fumes of various metals having an air contamination level not less than 0.05 milligram per cubic meter; minimum requirements.

84.1142 Isoamyl acetate tightness test; respirators designed for respiratory protection against dusts, fumes, and mists having an air contamination level less than 0.05 milligram per cubic meter, or against radionuclides; minimum requirements.
84.1143 Dust, fume, and mist air-purifying filter tests; performance requirements; general.
84.1144 Silica dust test for dust, fume, and mist respirators; single-use or reusable filters; minimum requirements.
84.1145 Silica dust test; non-powered single-use dust respirators; minimum requirements.
84.1146 Lead fume test for dust, fume, and mist respirators; minimum requirements.
84.1147 Silica mist test for dust, fume, and mist respirators; minimum requirements.
84.1148 Tests for respirators designed for respiratory protection against more than one type of dispersoid; minimum requirements.
84.1149 Airflow resistance tests; all dust, fume, and mist respirators; minimum requirements.
84.1150 Exhalation valve leakage test; minimum requirements.
84.1151 DOP filter test; respirators designed as respiratory protection against dusts, fumes, and mists having an air contamination level less than 0.05 milligram per cubic meter and against radionuclides; minimum requirements.
84.1152 Silica dust loading test; respirators designed as protection against dusts, fumes, and mists having an air contamination level less than 0.05 milligram per cubic meter and against radionuclides; minimum requirements.
84.1153 Dust, fume, mist, and smoke tests; canister bench tests; gas mask canisters containing filters; minimum requirements.
84.1154 Canister and cartridge requirements.
84.1155 Filters used with canisters and cartridges; location; replacement.
84.1156 Pesticide respirators; performance requirements; general.
84.1157 Chemical cartridge respirators with particulate filters; performance requirements; general.
84.1158 Dust, fume, and mist tests; respirators with filters; minimum requirements; general.

Tables to Subpart KK of Part 84

Authority: 29 U.S.C. 577a, 651 et seq., and 657(g); 30 U.S.C. 3, 5, 7, 811, 842(h), 844.

Subpart A—General Provisions

§ 84.1 Purpose.

The purpose of the regulations contained in this part 84 is:

(a) To establish procedures and prescribe requirements which must be met in filing applications for approval by the National Institute for Occupational Safety and Health of respirators or changes or modifications of approved respirators;

(b) To establish a schedule of fees to be charged each applicant for the inspections, examinations, and testing conducted by the Institute under the provisions of this part;

(c) To provide for the issuance of certificates of approval or modifications of certificates of approval for respirators which have met the applicable construction, performance, and respiratory protection requirements set forth in this part; and

(d) To specify minimum requirements and to prescribe methods to be employed by the Institute and by the applicant in conducting inspections, examinations, and tests to determine the effectiveness of respirators used during entry into or escape from hazardous atmospheres.

§ 84.2 Definitions.

As used in this part—

(a) *Applicant* means an individual, partnership, company, corporation, association, or other organization that designs, manufactures, assembles, or controls the assembly of a respirator and who seeks to obtain a certificate of approval for such respirator.

(b) *Approval* means a certificate or formal document issued by the Institute stating that an individual respirator or combination of respirators has met the minimum requirements of this part, and that the applicant is authorized to use and attach an approval label to any respirator, respirator container, or instruction card for any respirator manufactured or assembled in conformance with the plans and specifications upon which the approval was based, as evidence of such approval.

(c) *Approved* means conforming to the minimum requirements of this part.

(d) *Auxiliary equipment* means a self-contained breathing apparatus, the use of which is limited in underground mine rescue and recovery operations to situations where the wearer has ready access to fresh air and at least one crew equipped with approved self-contained breathing apparatus of 2 hours or longer rating, is in reserve at a fresh-air base.

(e) *Certification and Quality Assurance Branch* means the Certification and Quality Assurance Branch, Division of Safety Research, Appalachian Laboratory for Occupational Safety and Health, National Institute for Occupational Safety and Health, 1095 Willowdale Road, Morgantown, West Virginia 26505–2888.

(f) *Compressed-breathing gas* means oxygen or air stored in a compressed state and supplied to the wearer in gaseous form.

(g) *dBA* means sound pressure levels in decibels, as measured with the A-weighted network of a standard sound level meter using slow response.

(h) *Dust* means a solid mechanically produced particle with a size ranging from submicroscopic to macroscopic.

(i) *Respirators for entry into and escape from* means respiratory devices providing protection during entry into and escape from hazardous atmospheres.

(j) *Respirators for escape only* means respiratory devices providing protection only during escape from hazardous atmospheres.

(k) A *facepiece* or *mouthpiece* is a respirator component designed to provide a gas-tight or dust-tight fit with the face and may include headbands, valves, and connections for canisters, cartridges, filters, or respirable gas source.

(l) *Final inspection* means that activity carried out on a product after all manufacturing and assembly operations are completed to insure completeness and adherence to performance or other specifications, including satisfactory appearance.

(m) *Fume* means a solid condensation particle, generally less than 1 micrometer in diameter.

(n) *Gas* means an aeriform fluid which is in a gaseous state at ordinary temperature and pressure.

(o) *Hazardous atmosphere* means:

(1) Any atmosphere containing a toxic or disease producing gas, vapor, dust, fume, mist, or pesticide, either immediately or not immediately dangerous to life or health; or

(2) Any oxygen-deficient atmosphere.

(p) A *hood* or *helmet* is a respirator component which covers the wearer's head and neck, or head, neck, and shoulders, and is supplied with incoming respirable air for the wearer to breathe. It may include a headharness and connection for a breathing tube.

(q) *Immediately dangerous to life or health* means conditions that pose an immediate threat to life or health or conditions that pose an immediate threat of severe exposure to contaminants, such as radioactive materials, which are likely to have adverse cumulative or delayed effects on health.

(r) *Incoming inspection* means the activity of receiving, examining, and accepting only those materials and parts whose quality conforms to specification requirements.

(s) *In-process inspection* means the control of products at the source of production and at each step of the manufacturing process, so that departures from specifications can be

corrected before defective components or materials are assembled into the finished product.

(t) *Institute* means the National Institute for Occupational Safety and Health, Department of Health and Human Services.

(u) *Liquefied-breathing gas* means oxygen or air stored in liquid form and supplied to the wearer in a gaseous form.

(v) *Mist* means a liquid condensation particle with a size ranging from submicroscopic to macroscopic.

(w) *MSHA* means the Mine Safety and Health Administration, U.S. Department of Labor.

(x) *Not immediately dangerous to life or health* means any hazardous atmosphere which may produce physical discomfort immediately, chronic poisoning after repeated exposure, or acute adverse physiological symptoms after prolonged exposure.

(y) *Oxygen-deficient atmosphere* means an atmosphere which contains an oxygen partial pressure of less than 148 millimeters of mercury (19.5 percent by volume at sea level).

(z) *Powered air-purifying respirator* means a device equipped with a facepiece, hood, or helmet, breathing tube, canister, cartridge, filter, canister with filter, or cartridge with filter, and a blower.

(aa) *Respirator* means any device designed to provide the wearer with respiratory protection against inhalation of a hazardous atmosphere.

(bb) *Single-use respirator* means a respirator that is entirely discarded after excessive resistance, sorbent exhaustion, or physical damage renders it unsuitable for further use.

(cc) *Vapor* means the gaseous state of a substance that is solid or liquid at ordinary temperature and pressure.

§ 84.3 Respirators for mine rescue or other emergency use in mines.

(a)(1) NIOSH and the Mine Safety and Health Administration (MSHA), U.S. Department of Labor, shall jointly review and issue certifications for respirators used for mine emergencies and mine rescue, including any associated service-life plans, users' manuals and other supporting documentation.

(2) Each certification for a respirator designed for mine rescue or other emergency use in mines shall include, as a condition of approval, any use limitations related to mine safety and health.

(b) NIOSH and MSHA shall jointly determine appropriate recall and retrofit remedies for field complaints or identified deficiencies involving any respirators used in the mining environment.

Subpart B—Application for Approval

§ 84.10 Application procedures.

(a) Inspection, examination, and testing leading to the approval of the types of respirators classified in subpart F of this part shall be undertaken by the Institute only pursuant to written applications which meet the minimum requirements set forth in this subpart B.

(b) Applications shall be submitted to the Certification and Quality Assurance Branch, and shall be accompanied by a check, bank draft, or money order in the amount specified in subpart C of this part, payable to the order of the National Institute for Occupational Safety and Health.

(c) Except as provided in § 84.64, the examination, inspection, and testing of all respirators shall be conducted by the Certification and Quality Assurance Branch.

(d) Applicants, manufacturers, or their representatives may visit or communicate with the Certification and Quality Assurance Branch in order to discuss the requirements for approval of any respirator or the proposed designs thereof. No charge shall be made for such consultation and no written report shall be issued to applicants, manufacturers, or their representatives by the Institute as a result of such consultation.

(e) Respirators having electrical or electronic components that are required to be permissible under chapter I of title 30 shall be tested in accordance with 30 CFR part 18. Applications for approval of such respirators by MSHA shall be submitted in writing to: MSHA, Approval and Certification Center, Box 251, Industrial Park Road, Triadelphia, West Virginia 26059.

§ 84.11 Contents of application.

(a) Each application for approval shall contain a complete written description of the respirator for which approval is requested together with drawings and specifications (and lists thereof) showing full details of construction of the respirator and of the materials used.

(b) Drawings shall be titled, numbered, and dated; any revision dates shall be shown on the drawings, and the purpose of each revision being sought shall be shown on the drawing or described on an attachment to the drawing to which it applies.

(c) Each application for approval shall contain a proposed plan for quality control which meets the minimum requirements set forth in subpart E of this part.

(d) Each application shall contain a statement that the respirator has been pretested by the applicant as prescribed in § 84.64, and shall include the results of such tests.

(e) Each application for approval shall contain a statement that the respirator and component parts submitted for approval are either prototypes, or made on regular production tooling, with no operation included which will not be incorporated in regular production processing.

(The information collections contained in this section are approved under OMB control number 0920–0109)

§ 84.12 Delivery of respirators and components by applicant; requirements.

(a) Each applicant shall, when an application is filed pursuant to § 84.10, be advised by the Institute of the total number of respirators and component parts required for testing.

(b) The applicant shall deliver, at his own expense, the number of completely assembled respirators and component parts required for testing, to the Certification and Quality Assurance Branch.

(c) Respirators and component parts submitted for approval must be made from materials specified in the application.

(d) One completely assembled respirator approved under the provisions of this part may be retained by the Institute as a laboratory exhibit, the remaining respirators may be returned to the applicant at his own expense, upon written request within 30 days after notice of approval. If no such request is made, the respirators will be disposed of by the Institute in such manner as it deems appropriate.

(e) Where a respirator fails to meet the requirements for approval set forth in this part, all respirators and components delivered in accordance with this section may be returned to the applicant at his own expense, upon written request within 30 days after notice of disapproval. If no such request is made, the respirators will be disposed of by the Institute in such manner as it deems appropriate.

Subpart C—Fees

§ 84.20 Examination, inspection, and testing of complete respirator assemblies; fees.

Except as provided in § 84.22, the following fees shall be charged by the Institute for the examination, inspection and testing of complete respirator assemblies:

Self-contained breathing apparatus:	
Entry and escape, 1 hour or more	$3,500

Entry and escape, less than 1 hour	2,750
Escape only	2,000
Gas masks:	
Single hazard	1,100
Type N	4,100
Supplied-air respirators	750
Particulate respirators	1,250
Chemical cartridge respirators	1,150

§ 84.21 Examination, inspection, and testing of respirator components or subassemblies; fees.

Except as provided in § 84.22, the following fees shall be charged by the Institute for the examination, inspection and testing of the individual respirator components or subassemblies:

Facepieces	$450
Canisters	900
Cartridges	600
Filters	650
Hoses	250
Blowers	250
Harnesses	100

§ 84.22 Unlisted fees; additional fees; payment by applicant prior to approval.

(a) Applications for the examination, inspection and testing of complete respirator assemblies which are not listed in § 84.20, or for the examination, inspection, and testing of respirator components or subassemblies which are not listed in § 84.21, shall be accompanied by the following deposits:

Complete respirator assembly	$1,500
Each individual component or subassembly	500

(b) The Institute reserves the right to conduct any examination, inspection, or test it deems necessary to determine the quality and effectiveness of any listed or unlisted respirator assembly or respirator component or subassembly, and to assess the cost of such examinations, inspections, or tests against the applicant prior to the issuance of any approval for such assembly, component, or subassembly.

(c) The fees charged for the examination, inspection, and testing of unlisted respirator assemblies, unlisted individual respirator components or subassemblies, and for the additional examination, inspection, and testing of listed respirator assemblies and components or subassemblies shall be at the rate of $100 per day for each man-day required to be expended by the Institute.

(d) Upon completion of all examinations, inspections, and tests of unlisted respirator assemblies or components, or following the completion of any additional examination, inspections, or tests of listed assemblies, or components or subassemblies, including retesting subsequent to disapproval, the Institute shall advise the applicant in writing of the total cost assessed and the additional amount, if any, which must be paid to the Institute as a condition of approval.

(e) In the event the amount assessed by the Institute for unlisted assemblies, or components or subassemblies is less than the amount of the deposit submitted in accordance with paragraph (a) of this section, the Institute shall refund the overpayment upon the issuance of any approval or notice of disapproval.

Subpart D—Approval and Disapproval

§ 84.30 Certificates of approval; scope of approval.

(a) The Institute shall issue certificates of approval pursuant to the provisions of this subpart only for individual, completely assembled respirators which have been examined, inspected, and tested, and which meet the minimum requirements set forth in subparts H through L of this part, as applicable.

(b) The Institute will not issue certificates of approval for any respirator component or for any respirator subassembly.

(c) The Institute shall not issue an informal notification of approval. However, if the application for approval, submitted in accordance with § 84.11, states that the submitted respirator and component parts are only prototypes, the Institute will examine, inspect, and test such respirator and component parts in accordance with the provisions of this part. If, upon completion of such examinations, inspections and tests, it is found that the prototype meets the minimum requirements set forth in this part, the Institute may inform the applicant, in writing, of the results of the examinations, inspections, and tests, and may require him to resubmit respirators and component parts made on regular production tooling, with no operations included which will not be incorporated in regular production processing, for further examination, inspection, and testing, prior to issuance of the certificate of approval.

(d) Applicants required to resubmit respirators and component parts made on regular production tooling, with no operation included which will not be incorporated in regular production processing, shall be charged fees in accordance with subpart C of this part.

§ 84.31 Certificates of approval; contents.

(a) The certificate of approval shall contain a classification and a description of the respirator or combination of respirators for which it is issued, as provided in this part.

(b) The certificate of approval shall specifically set forth any restrictions or limitations on the respirator's use in hazardous atmospheres.

(c) Each certificate of approval shall be accompanied by the drawings and specifications (and lists thereof) submitted by the applicant in accordance with § 84.11. These drawings and specifications shall be referenced in the certificate of approval, and shall be maintained by the applicant. The drawings and specifications listed in each certificate of approval shall set forth in detail the design and construction requirements which shall be met by the applicant during commercial production of the respirator.

(d) Each certificate of approval shall be accompanied by a reproduction of the approval label design to be employed by the applicant with each approved respirator, as provided in § 84.33.

(e) No test data or specific laboratory findings will accompany any certificate of approval, however, the Institute will release pertinent test data and specific findings upon written request by the applicant, or as required by statute or regulation.

(f) Each certificate of approval shall also contain the approved quality control plan as specified in § 84.42.

§ 84.32 Notice of disapproval.

(a) If, upon the completion of the examinations, inspections, and tests required to be conducted in accordance with the provisions of this part, it is found that the respirator does not meet the minimum requirements set forth in this part, the Institute shall issue a written notice of disapproval to the applicant.

(b) Each notice of disapproval shall be accompanied by all pertinent data or findings with respect to the defects of the respirator for which approval was sought with a view to the possible correction of any such defects.

(c) The Institute shall not disclose, except to the applicant or as required by statute or regulation, any data, findings, or other information with respect to any respirator for which a notice of disapproval is issued.

§ 84.33 Approval labels and markings; approval of contents; use.

(a) Full-scale reproductions of approval labels and markings, and a sketch or description of the method of application and position on the harness, container, canister, cartridge, filter, or

other component, together with instructions for the use and maintenance of the respirator shall be submitted to the Institute for approval.

(b) Approval labels shall bear the emblem of the National Institute for Occupational Safety and Health and the seal of the Department of Health and Human Services, the applicant's name and address, an approval number assigned by the Institute and, where appropriate, restrictions or limitations placed upon the use of the respirator by the Institute. The approval number assigned by the Institute shall be designated by the prefix TC and a serial number.

(c) The Institute shall, where necessary, notify the applicant when additional labels, markings, or instructions will be required.

(d) Approval labels and markings shall only be used by the applicant to whom they were issued.

(e) Legible reproductions or abbreviated forms of the label approved by the Institute for use on each respirator shall be attached to or printed at the following locations:

Respirator type	Label type	Location
Self-contained breathing apparatus	Entire	Harness assembly and canister (where applicable).
Gas mask	Entire	Mask container and canister.
Supplied air respirator	.....do	Respirator container or instruction card.
Particulate respirator	.....do	Respirator container and filter container.
	Abbreviated	Filters.
Chemical-cartridge respirator	Entire	Respirator container, cartridge container, and filter containers (where applicable).
	Abbreviated	Cartridges and filters and filter containers.

(f) The use of any Institute approval label obligates the applicant to whom it is issued to maintain or cause to be maintained the approved quality control sampling schedule and the acceptable quality level for each characteristic tested, and to assure that it is manufactured according to the drawings and specifications upon which the certificate of approval is based.

(g) Each respirator, respirator component, and respirator container shall, as required by the Institute to assure quality control and proper use of the respirator, be labeled distinctly to show the name of the applicant, and the name and letters or numbers by which the respirator or respirator component is designated for trade purposes, and the lot number, serial number, or approximate date of manufacture.

§ 84.34 Revocation of certificates of approval.

The Institute reserves the right to revoke, for cause, any certificate of approval issued pursuant to the provisions of this part. Such causes include, but are not limited to, misuse of approval labels and markings, misleading advertising, and failure to maintain or cause to be maintained the quality control requirements of the certificate of approval.

§ 84.35 Changes or modifications of approved respirators; issuance of modification of certificate of approval.

(a) Each applicant may, if he desires to change any feature of an approved respirator, request a modification of the original certificate of approval issued by the Institute for such respirator by filing an application for such modification in accordance with the provisions of this section.

(b) Applications shall be submitted as for an original certificate of approval, with a request for a modification of the existing certificate to cover any proposed change.

(c) The application shall be accompanied by appropriate drawings and specifications, and by a proposed quality control plan which meets the requirements of subpart E of this part.

(d) The application for modification, together with the accompanying material, shall be examined by the Institute to determine whether testing will be required.

(e) The Institute shall inform the applicant of the fee required for any additional testing and the applicant will be charged for the actual cost of any examination, inspection, or test required, and such fees shall be submitted in accordance with the provisions of subpart C of this part.

(f) If the proposed change or modification meets the requirements of this part, a formal certificate of modification will be issued, accompanied, where necessary, by a list of new and revised drawings and specifications covering the change(s) and reproductions of revised approval labels.

(The information collections contained in this section are approved under OMB control number 0920–0109.)

§ 84.36 Delivery of changed or modified approved respirator.

An approved respirator for which a formal certificate of modification has been issued shall be delivered, with proper markings and containers, by the applicant to the Certification and Quality Assurance Branch, as soon as it is commercially produced.

Subpart E—Quality Control

§ 84.40 Quality control plans; filing requirements.

As a part of each application for approval or modification of approval submitted pursuant to this part, each applicant shall file with the Institute a proposed quality control plan which shall be designed to assure the quality of respiratory protection provided by the respirator for which approval is sought.

§ 84.41 Quality control plans; contents.

(a) Each quality control plan shall contain provisions for the management of quality, including:

(1) Requirements for the production of quality data and the use of quality control records;

(2) Control of engineering drawings, documentations, and changes;

(3) Control and calibration of measuring and test equipment;

(4) Control of purchased material to include incoming inspection;

(5) Lot identification, control of processes, manufacturing, fabrication, and assembly work conducted in the applicant's plant;

(6) Audit of final inspection of the completed product; and

(7) The organizational structure necessary to carry out these provisions.

(b) Each provision for incoming and final inspection in the quality control plan shall include a procedure for the selection of a sample of respirators and the components thereof for testing, in accordance with procedures set forth in Military Standard MIL–STD–414, 11 June 1957, including Change Notice No. 1, ''Sampling Procedures and Tables for Inspection by Variables for Percent Defective,'' or an approved equivalent sampling procedure, or an approved

combination of sampling procedures. The procedure of Military Standard MIL–STD–105D, 29 April 1963, ''Sampling Procedures and Tables for Inspection by Attributes,'' is an example of an equivalent sampling procedure. MIL–STD–414 is incorporated by reference and has been approved by the Director of the Federal Register in accordance with 5 U.S.C. 552(a) and 1 CFR part 51. Copies may be obtained from DODSSP, Standardization Document Order Desk, 700 Robbins Avenue, Bldg. 4D, Philadelphia, PA 19111–5094. Copies may be inspected at the NIOSH, Certification and Quality Assurance Branch, 1095 Willowdale Road, Morgantown, WV 26505–2888, or at the Office of the Federal Register, 800 North Capitol Street NW., suite 700, Washington, DC. Copies of MIL–STD–105D may be inspected or obtained from the NIOSH, Certification and Quality Assurance Branch, 1095 Willowdale Road, Morgantown, WV 26505–2888. Incoming bulk raw material inspection or verification of specification, and in-process inspection shall be sufficient to ensure control of product quality through the manufacturing cycle.

(c) The sampling procedure shall include a list of the characteristics to be tested by the applicant or his agent.

(d) The characteristics listed in accordance with paragraph (c) of this section shall be classified according to the potential effect of such defect and grouped into the following classes:

(1) *Critical.* A defect that judgment and experience indicate is likely to result in a condition immediately hazardous to life or health for individuals using or depending upon the respirator;

(2) *Major A.* A defect, other than critical, that is likely to result in failure to the degree that the respirator does not provide any respiratory protection, or a defect that reduces protection and is not detectable by the user;

(3) *Major B.* A defect, other than Major A or critical, that is likely to result in reduced respiratory protection, and is detectable by the user; and

(4) *Minor.* A defect that is not likely to materially reduce the usability of the respirator for its intended purpose, or a defect that is a departure from established standards and has little bearing on the effective use or operation of the respirator.

(e) The quality control inspection test method to be used by the applicant or his agent for each characteristic required to be tested shall be described in detail.

(f) Each item manufactured shall be 100 percent inspected for defects in all critical characteristics and all defective items shall be rejected.

(g) The Acceptable Quality Level (AQL) for each major or minor defect so classified by the applicant shall be:

(1) *Major A.* 1.0 percent;

(2) *Major B.* 2.5 percent; and

(3) *Minor.* 4.0 percent.

(h) Except as provided in paragraph (i) of this section, inspection level IV as described in MIL–STD–414, 11 June 1957, including Change Notice No.1, ''Sampling Procedures and Tables for Inspection by Variables for Percent Defective,'' or an equivalent procedure, shall be used for major and minor characteristics and 100 percent inspection for critical characteristics. Inspection level II as described in MIL–STD–105D, 29 April 1963, ''Sampling Procedures and Tables for Inspection by Attributes,'' is an example of an equivalent procedure.

(i) Subject to the approval of the Institute, where the quality control plan provisions for raw material, processes, manufacturing, and fabrication, inspections are adequate to ensure control of finished article quality, destructive testing of finished articles may be conducted at a lower level of inspection than that specified in paragraph (h) of this section.

(The information collections contained in this section are approved under OMB control number 0920–0109)

§ 84.42 Proposed quality control plans; approval by the Institute.

(a) Each proposed quality control plan submitted in accordance with this subpart shall be reviewed by the Institute to determine its effectiveness in ensuring the quality of respiratory protection provided by the respirator for which an approval is sought.

(b) If the Institute determines that the proposed quality control plan submitted by the applicant will not ensure adequate quality control, the Institute shall require the applicant to modify the procedures and testing requirements of the plan prior to approval of the plan and issuance of any certificate of approval.

(c) Approved quality control plans shall constitute a part of and be incorporated into any certificate of approval issued by the Institute, and compliance with such plans by the applicant shall be a condition of approval.

§ 84.43 Quality control records; review by the Institute; revocation of approval.

(a) The applicant shall keep quality control inspection records sufficient to carry out the procedures required in MIL–STD–414, 11 June 1957, including Change Notice No. 1, ''Sampling Procedures and Tables for Inspection by Variables for Percent Defective,'' or an approved equivalent sampling procedure. MIL–STD–105D, 29 April 1963, ''Sampling Procedures and Tables for Inspection by Attributes,'' is an example of an approved equivalent sampling procedure. MIL–STD–414 is incorporated by reference and has been approved by the Director of the Federal Register in accordance with 5 U.S.C. 552(a) and 1 CFR part 51. Copies may be obtained from DODSSP, Standardization Document Order Desk, 700 Robbins Avenue, Bldg. 4D, Philadelphia, Pa. 19111–5094. Copies may be inspected at the NIOSH, Certification and Quality Assurance Branch, 1095 Willowdale Road, Morgantown, WV 26505–2888, or at the Office of the Federal Register, 800 North Capitol Street, NW., suite 700, Washington, DC. Copies of MIL–STD–105D may be inspected or obtained from the NIOSH, Certification and Quality Assurance Branch, 1095 Willowdale Road, Morgantown, WV 26505–2888.

(b) The Institute reserves the right to have its representatives inspect the applicant's quality control test methods, equipment, and records, and to interview any employee or agent of the applicant in regard to quality control test methods, equipment, and records.

(c) The Institute reserves the right to revoke, for cause, any certificate of approval where it is found that the applicant's quality control test methods, equipment, or records do not ensure effective quality control over the respirator for which the approval was issued.

(The information collections contained in this section are approved under OMB control number 0920–0109)

Subpart F—Classification of Approved Respirators; Scope of Approval; Atmospheric Hazards; Service Time

§ 84.50 Types of respirators to be approved; scope of approval.

Approvals shall be issued for the types of respirators which have been classified pursuant to this subpart F, have been inspected, examined and tested by the Institute, in accordance with the provisions of subparts G through L of this part, and have been found to provide respiratory protection for fixed periods of time against the hazards specified in such approval.

§ 84.51 Entry and escape, or escape only; classification.

Respirators described in subparts H through L of this part shall be classified for use as follows:

(a) *Entry and escape.* Respirators designed and approved for use during

entry into a hazardous atmosphere, and for escape from a hazardous atmosphere; or

(b) *Escape only*. Respirators designed and approved for use only during escape from a hazardous atmosphere.

§ 84.52 Respiratory hazards; classification.

Respirators described in subparts H through L of this part shall be classified as approved for use against any or all of the following respiratory hazards:

(a) Oxygen deficiency;

(b) Gases and vapors; and

(c) Particles, including dusts, fumes and mists.

§ 84.53 Service time; classification.

(a) Respirators described in subparts H through L of this part shall be classified, where applicable, as approved for use during the following prescribed service times:

(1) Four hours;

(2) Three hours;

(3) Two hours;

(4) One hour;

(5) Forty-five minutes;

(6) Thirty minutes;

(7) Fifteen minutes;

(8) Ten minutes;

(9) Five minutes; or

(10) Three minutes.

(b) Other service times may be prescribed by the Institute.

Subpart G—General Construction and Performance Requirements

§ 84.60 Construction and performance requirements; general.

(a) The Institute shall issue approvals for the types of respirators described in subparts H through L of this part which have met the minimum requirements set forth for such respirators in this part.

(b) In addition to the types of respirators specified in subparts H through L of this part, the Institute shall issue approvals for other respiratory protective devices not specifically described in this part subject to such additional requirements as may be imposed in accordance with § 84.63(c).

§ 84.61 General construction requirements.

(a) Respirators will not be accepted by the Institute for examination, inspection and testing unless they are designed on sound engineering and scientific principles, constructed of suitable materials and evidence good workmanship.

(b) Respirator components which come into contact with the wearer's skin shall be made of nonirritating materials.

(c) Components replaced during or after use shall be constructed of materials which will not be damaged by normal handling.

(d) Mouthpieces, hoods, helmets, and facepieces, except those employed in single-use respirators, shall be constructed of materials which will withstand repeated disinfection as recommended by the applicant in his instructions for use of the device.

§ 84.62 Component parts; minimum requirements.

(a) The component parts of each respirator shall be:

(1) Designed, constructed, and fitted to insure against creation of any hazard to the wearer;

(2) Assembled to permit easy access for inspection and repair of functional parts; and

(3) Assembled to permit easy access to parts which require periodic cleaning and disinfecting.

(b) Replacement parts shall be designed and constructed to permit easy installation and to maintain the effectiveness of the respirator.

§ 84.63 Test requirements; general.

(a) Each respirator and respirator component shall when tested by the applicant and by the Institute, and meet the applicable requirements set forth in subparts H through L of this part.

(b) Where a combination respirator is assembled from two or more types of respirators, as described in this part, each of the individual respirator types which have been combined shall, as applicable, meet the minimum requirements for such respirators set forth in subparts H through L of this part, and such combination respirators, except as specified in § 84.70(b)(2), will be classified by the type of respirator in the combination which provides the least protection to the user.

(c) In addition to the minimum requirements set forth in subparts H through L of this part, the Institute reserves the right to require, as a further condition of approval, any additional requirements deemed necessary to establish the quality, effectiveness, and safety of any respirator used as protection against hazardous atmospheres.

(d) Where it is determined after receipt of an application that additional requirements will be required for approval, the Institute will notify the applicant in writing of these additional requirements, and necessary examinations, inspections, or tests, stating generally the reasons for such requirements, examinations, inspections, or tests.

§ 84.64 Pretesting by applicant; approval of test methods.

(a) Prior to making or filing any application for approval or modification of approval, the applicant shall conduct, or cause to be conducted, examinations, inspections, and tests of respirator performance which are equal to or exceed the severity of those prescribed in this part.

(b) With the application, the applicant shall provide a statement to the Institute showing the types and results of the examinations, inspections, and tests required under paragraph (a) of this section and state that the respirator meets the minimum requirements of subparts H through L of this part, as applicable. Complete examination, inspection, and test data shall be retained on file by the applicant and be submitted, upon request, to the Institute.

(c) The Institute may, upon written request by the applicant, provide drawings and descriptions of its test equipment and otherwise assist the applicant in establishing a test laboratory or securing the services of a testing agency.

(d) No approval will be issued until the Institute has validated the applicant's test results.

§ 84.65 Conduct of examinations, inspections, and tests by the Institute; assistance by applicant; observers; recorded data; public demonstrations.

(a) All examinations, inspections, and tests conducted pursuant to subparts H through L of this part will be under the sole direction and control of the Institute.

(b) The Institute may, as a condition of approval, require the assistance of the applicant or agents of the applicant during the assembly, disassembly, or preparation of any respirator or respirator component prior to testing or in the operation of such equipment during testing.

(c) Only Institute personnel, persons assisting the Institute pursuant to paragraph (b) of this section, and such other persons as are requested by the Institute or the applicant to be observers, shall be present during any examination, inspection, or test conducted prior to the issuance of an approval by the Institute for the equipment under consideration.

(d) The Institute shall hold as confidential any analyses, drawings, specifications, or materials submitted by the applicant and shall not disclose any principles or patentable features of such equipment, except as required by statute or regulation.

(e) As a condition of each approval issued for any respirator, the Institute

reserves the right, following the issuance of such approval, to conduct such public tests and demonstrations of the approved respiratory equipment as is deemed appropriate.

§ 84.66 Withdrawal of applications; refund of fees.

(a) Any applicant may, upon a written request submitted to the Institute, withdraw any application for approval of any respirator.

(b) Upon receipt of a written request for the withdrawal of an application, the Institute shall determine the total man-days expended and the amount due for services already performed during the course of any examinations, inspections, or tests conducted pursuant to such application. The total amount due shall be determined in accordance with the provisions of § 84.22 and assessed against the fees submitted by the applicant. If the total amount assessed is less than the fees submitted, the Institute shall refund the balance together with a statement of the charges made for services rendered.

Subpart H—Self-Contained Breathing Apparatus

§ 84.70 Self-contained breathing apparatus; description.

(a) Self-contained breathing apparatus, including all completely assembled, portable, self-contained devices designed for use as respiratory protection during entry into and escape from or escape only from hazardous atmospheres, are described as follows:

(1) *Closed-circuit apparatus.* An apparatus of the type in which the exhalation is rebreathed by the wearer after the carbon dioxide has been effectively removed and a suitable oxygen concentration restored from sources composed of:

(i) Compressed oxygen; or

(ii) Chemical oxygen; or

(iii) Liquid-oxygen.

(2) Open-circuit apparatus. An apparatus of the following types from which exhalation is vented to the atmosphere and not rebreathed:

(i) *Demand-type apparatus.* An apparatus in which the pressure inside the facepiece in relation to the immediate environment is positive during exhalation and negative during inhalation; or

(ii) *Pressure-demand-type apparatus.* An apparatus in which the pressure inside the facepiece in relation to the immediate environment is positive during both inhalation and exhalation.

(b) The following respirators may be classified as designed and approved for use during emergency entry into a hazardous atmosphere:

(1) A combination respirator which includes a self-contained breathing apparatus; and

(2) A Type ''C'' or Type ''CE'' supplied air respirator, where—

(i) The self-contained breathing apparatus is classified for 3-, 5-, or 10-minute service time and the air line supply is used during entry; or

(ii) The self-contained breathing apparatus is classified for 15 minutes or longer service time and not more than 20 percent of the rated capacity of the air supply is used during entry.

(c) Self-contained breathing apparatus classified for less than 1 hour service time will not be approved for use during underground mine rescue and recovery operations except as auxiliary equipment.

(d) Self-contained breathing apparatus classified for less than 30 minutes' service time will not be approved for use as auxiliary equipment during underground mine rescue and recovery operations.

§ 84.71 Self-contained breathing apparatus; required components.

(a) Each self-contained breathing apparatus described in § 84.70 shall, where its design requires, contain the following component parts:

(1) Facepiece or mouthpiece, and noseclip;

(2) Respirable breathing gas container;

(3) Supply of respirable breathing gas;

(4) Gas pressure or liquid level gages;

(5) Timer;

(6) Remaining service life indicator or warning device;

(7) Hand-operated valves;

(8) Breathing bag;

(9) Safety relief valve or safety relief system; and

(10) Harness.

(b) The components of each self-contained breathing apparatus shall meet the minimum construction requirements set forth in subpart G of this part.

§ 84.72 Breathing tubes; minimum requirements. Flexible breathing tubes used in conjunction with breathing apparatus shall be designed and constructed to prevent:

(a) Restriction of free head movement;

(b) Disturbance of the fit of facepieces and mouthpieces;

(c) Interference with the wearer's activities; and

(d) Shutoff of airflow due to kinking, or from chin or arm pressure.

§ 84.73 Harnesses; installation and construction; minimum requirements.

(a) Each apparatus shall, where necessary, be equipped with a suitable harness designed and constructed to hold the components of the apparatus in position against the wearer's body.

(b) Harnesses shall be designed and constructed to permit easy removal and replacement of apparatus parts and, where applicable, provide for holding a full facepiece in the ready position when not in use.

§ 84.74 Apparatus containers; minimum requirements.

(a) Apparatus may be equipped with a substantial, durable container bearing markings which show the applicant's name, the type and commercial designation of the respirator it contains, and all appropriate approval labels.

(b) Containers supplied by the applicant for carrying or storing self-contained breathing apparatus will be inspected, examined, and tested as components of the respirator for which approval is sought.

(c) Containers for self-contained breathing apparatus shall be designed and constructed to permit easy removal of the apparatus.

§ 84.75 Half-mask facepieces, full facepieces, mouthpieces; fit; minimum requirements.

(a) Half-mask facepieces and full facepieces shall be designed and constructed to fit persons with various facial shapes and sizes, either:

(1) By providing more than one facepiece size; or

(2) By providing one facepiece size which will fit varying facial shapes and sizes.

(b) Full facepieces shall provide for the optional use of corrective spectacles or lenses which shall not reduce the respiratory protective qualities of the apparatus.

(c) Apparatus with mouthpieces shall be equipped with noseclips which are securely attached to the mouthpiece or apparatus and provide an airtight seal.

(d) Facepieces shall be designed to prevent eyepiece, spectacle, and lens fogging.

§ 84.76 Facepieces; eyepieces; minimum requirements.

(a) Facepieces shall be designed and constructed to provide adequate vision which is not distorted by the eyepiece.

(b) All eyepieces shall be designed and constructed to be impact and penetration resistant. Federal Specification, Mask, Air Line: and Respirator, Air Filtering, Industrial, GGG–M–125d, October 11, 1965 with interim amendment-1, July 30, 1969, is an example of an appropriate standard for determining impact and penetration resistance. Copies of GGG–M–125d may be obtained from the NIOSH, Certification and Quality Assurance

Branch, 1095 Willowdale Road, Morgantown, WV 26505–2888.

§ 84.77 Inhalation and exhalation valves; minimum requirements.

(a) Inhalation and exhalation valves shall be provided where necessary and protected against damage and distortion.

(b) Exhalation valves shall be—

(1) Protected against external influence; and

(2) Designed and constructed to prevent inward leakage of contaminated air.

§ 84.78 Head harnesses; minimum requirements.

(a) Facepieces shall be equipped with adjustable and replaceable head harnesses designed and constructed to provide adequate tension during suspension and an even distribution of pressure over the entire area in contact with the face.

(b) Mouthpieces shall be equipped, where applicable, with adjustable and replaceable harnesses designed and constructed to hold the mouthpiece in place.

§ 84.79 Breathing gas; minimum requirements.

(a) Breathing gas used to supply apparatus shall be respirable and contain no less than 19.5 (dry atmosphere) volume percent of oxygen.

(b) Oxygen, including liquid oxygen, shall contain not less than 99.0 percent, by volume, of pure O_2, not more than 0.03%, by volume, carbon dioxide, and not more than 0.001%, by volume, carbon monoxide. Methods for making these determinations can be found in the U.S. Pharmacopeia National Formulary. Containers used for oxygen must not be treated with any toxic, sleep-inducing, narcosis-producing, or respiratory tract irritating compounds.

(c) Compressed, gaseous breathing air shall meet the applicable minimum grade requirements for Type I gaseous air set forth in the Compressed Gas Association Commodity Specification for Air, G–7.1, 1966 (Grade D or higher quality). G–7.1 is incorporated by reference and has been approved by the Director of the Federal Register in accordance with 5 U.S.C. 552(a) and 1 CFR part 51. Copies may be obtained from American National Standards Institute, Inc., 1430 Broadway, New York, NY 10018. Copies may be inspected at the NIOSH, Certification and Quality Assurance Branch, 1095 Willowdale Road, Morgantown, WV 26505–2888, or at the Office of the Federal Register, 800 North Capitol Street, NW., suite 700, Washington, DC.

(d) Compressed, liquefied breathing air shall meet the applicable minimum grade requirements for Type II liquid air set forth in the Compressed Gas Association Commodity Specification for Air, G–7.1, 1966 (Grade B or higher quality). G–7.1 is incorporated by reference and has been approved by the Director of the Federal Register in accordance with 5 U.S.C. 552(a) and 1 CFR part 51. Copies may be obtained from American National Standards Institute, Inc., 1430 Broadway, New York, NY 10018. Copies may be inspected at the NIOSH, Certification and Quality Assurance Branch, 1095 Willowdale Road, Morgantown, WV 26505–2888, or at the Office of the Federal Register, 800 North Capitol Street, NW., suite 700, Washington, DC.

§ 84.80 Interchangeability of oxygen and air prohibited.

Approvals shall not be issued by the Institute for any apparatus, combination of respirator assemblies, or any apparatus or respirator component which is designed or constructed to permit the interchangeable use of oxygen and air.

§ 84.81 Compressed breathing gas and liquefied breathing gas containers; minimum requirements.

(a) Compressed breathing gas and liquefied breathing gas containers shall meet the minimum requirements of the Department of Transportation for interstate shipment of such containers when fully charged.

(b) Such containers shall be permanently and legibly marked to identify their contents, e.g., compressed breathing air, compressed breathing oxygen, liquefied breathing air, or liquefied breathing oxygen.

(c) Containers normally removed from apparatus for refilling shall be equipped with a dial indicating gage which shows the pressure in the container.

(d) Compressed breathing gas contained valves or a separate charging system or adapter provided with each apparatus shall be equipped with outlet threads specified for the service by the American Standards Association, Compressed Gas Cylinder Valve Outlet and Inlet Connections, B57.1–1965. B57.1–1965 is incorporated by reference and has been approved by the Director of the Federal Register in accordance with 5 U.S.C. 552(a) and 1 CFR part 51. Copies may be obtained from American National Standards Institute, Inc., 1430 Broadway, New York, NY Copies may be inspected at the NIOSH, Certification and Quality Assurance Branch, 1095 Willowdale Road, Morgantown, WV 26505–2888, or at the Office of the **Federal Register**, 800 North Capitol Street, NW., suite 700, Washington, DC.

§ 84.82 Gas pressure gages; minimum requirements.

(a) Gas pressure gages employed on compressed breathing gas containers shall be calibrated in pounds per square inch.

(b) Liquid-level gages shall be calibrated in fractions of total container capacity, or in units of liquid volume.

(c) Gas pressure gages other than those specified in paragraphs (a) and (b) of this section shall be calibrated in:

(1) Pounds per square inch; or

(2) In fractions of total container capacity; or

(3) Both in pounds per square inch and fractions of total container capacity.

(d)(1) Dial-indicating gages shall be reliable to within ±5 percent of full scale when tested both up and down the scale at each of 5 equal intervals.

(2) The full-scale graduation of dial-indicating gages shall not exceed 150 percent of the maximum rated cylinder pressures specified for the container in applicable Department of Transportation specifications or permits.

(e)(1) Stem-type gages shall be readable by sight and by touch and shall have a stem travel distance of not less than one-fourth inch between each graduation.

(2) A minimum of five graduations shall be engraved on the stem of each gage and these graduations shall include readings for empty, one-quarter, one-half, three-quarters, and full.

(3) Stem gage readings shall not vary from true readings by more than one-sixteenth inch per inch of stem travel.

(f) The loss of gas through a broken gage or severed gage connection shall not exceed 70 liters per minute when the cylinder pressure is 6,900 $kN/m.^2$ (1,000 pounds per square inch gage) or when the liquid level is at one-half.

(g) Where gages are connected to the apparatus through a gage line, the gage and line shall be capable of being isolated from the apparatus except where the failure of the gage or line would not impair the performance or service life of the apparatus.

(h) Oxygen pressure gages shall have the words ''Oxygen'' and ''Use No Oil'' marked prominently on the gage.

(i)(1) Apparatus using compressed breathing gas, except apparatus classified for escape only, shall be equipped with gages visible to the wearer which indicate the remaining gas content in the container.

(2) Apparatus using liquefied breathing gas, except apparatus classified for escape only, shall be equipped with gages visible to the wearer which indicate the remaining liquid content in the container;

however, where the liquid content cannot be rapidly vented, and the service time of the device begins immediately after filling, a timer shall be provided in place of a visible gage.

§ 84.83 Timers; elapsed time indicators; remaining service life indicators; minimum requirements.

(a) Elapsed time indicators shall be provided for apparatus with a chemical oxygen source, except:

(1) Apparatus used for escape only; or

(2) Liquefied breathing gas apparatus equipped with gages visible to the wearer which indicate the remaining liquid content in the container.

(b) The timer or other indicator shall be accurately calibrated in minutes of remaining service life.

(c) Timers shall be readable by sight and by touch during use by the wearer.

(d) Timers shall be equipped with automatically preset alarms which will warn the wearer for a period of 7 seconds or more after the preset time has elapsed.

(e) Remaining service-life indicators or warning devices shall be provided in addition to a pressure gage on compressed gas self-contained breathing apparatus, except apparatus used for escape only, and shall operate automatically without preadjustment by the wearer.

(f) Each remaining service-life indicator or warning device shall give an alarm when the remaining service life of the apparatus is reduced within a range of 20 to 25 percent of its rated service time.

§ 84.84 Hand-operated valves; minimum requirements.

(a) Hand-operated valves shall be designed and constructed to prevent removal of the stem from the valve body during normal usage to insure against a sudden release of the full pressure of the container when the valve is opened.

(b) Valves shall be designed or positioned to prevent accidental opening and closing, and damage from external forces.

(c) Valves operated during use of the apparatus shall be installed in locations where they can be readily adjusted by the wearer.

(d) Main-line valves, designed and constructed to conserve gas in the event of a regulator or demand valve failure, shall be provided in addition to gas container valves, except when such failure will not affect performance.

(e) Hand-operated bypass systems designed and constructed to permit the wearer to breathe and to conserve his gas supply in the event of a regulator or demand valve failure, shall be provided where necessary.

(f) Valves installed on apparatus shall be clearly distinguishable from one another by sight and touch.

(g) The bypass system valve control shall be colored red.

(h) A main-line or bypass valve or system will not be required on apparatus for escape only.

(i) Safety relief valves or systems, designed and constructed to release excess pressure in the breathing circuit, shall be provided on closed-circuit apparatus, and shall meet the following requirements:

(1) The relief valve or system shall operate automatically when the pressure in the breathing circuit on the inhalation side of the breathing bag reaches 13 mm. (one-half inch) water-column height of pressure above the minimum pressure required to fill the breathing bag, within the breathing resistance requirements for the apparatus.

(2) The relief valve or system shall be designed to prevent external atmospheres from entering the breathing circuit.

(3) The relief valve or system shall be designed to permit manual overriding for test purposes and in the event of a failure in the valve or system.

§ 84.85 Breathing bags; minimum requirements.

(a) Breathing bags shall have sufficient volume to prevent gas waste during exhalation and to provide an adequate reserve for inhalation.

(b) Breathing bags shall be constructed of materials which are flexible and resistant to gasoline vapors.

(c) Breathing bags shall be installed in a location which will protect them from damage or collapse by external forces, except on apparatus classified for escape only.

§ 84.86 Component parts exposed to oxygen pressures; minimum requirements.

Each applicant shall certify that the materials employed in the construction of component parts exposed to oxygen pressures above atmospheric pressure are safe and compatible for their intended use.

§ 84.87 Compressed gas filters; minimum requirements.

All self-contained breathing apparatus using compressed gas shall have a filter downstream of the gas source to effectively remove particles from the gas stream.

§ 84.88 Breathing bag test.

(a) Breathing bags will be tested in an air atmosphere saturated with gasoline vapor at room temperature (24–30 °C./75–85 °F.) for a continuous period of twice the rated time of the apparatus (except for apparatus for escape only where the test period shall be the rated time of the apparatus).

(b) The bag will be operated during this test by a breathing machine with 24 respirations per minute and a minute-volume of 40 liters.

(c) A breathing machine cam with a work rate of 622 kp.-m./min. will be used. The dimensions of a suitable breathing machine cam are available from the Institute upon request.

(d) The air within the bag(s) shall not contain more than 100 parts per million of gasoline vapor at the end of the test.

§ 84.89 Weight requirement.

(a) The completely assembled and fully charged apparatus shall not weigh more than 16 kg. (35 pounds); however, where the weight decreases by more than 25 percent of its initial charge weight during its rated service life, the maximum allowable weight of a completely assembled and fully charged apparatus shall be 18 kg. (40 pounds).

(b) Where an apparatus employs equipment which contributes materially to the wearer's comfort, e.g., a cooling system, the completely assembled and fully charged apparatus shall not weigh more than 18 kg. (40 pounds) regardless of the decrease in weight during use.

§ 84.90 Breathing resistance test; inhalation.

(a) Resistance to inhalation airflow will be measured in the facepiece or mouthpiece while the apparatus is operated by a breathing machine as described in § 84.88.

(b) The inhalation resistance of open-circuit apparatus shall not exceed 32 mm. (1.25 inch) water-column height (at a flow rate of 120 liters per minute).

(c) The inhalation resistance of closed-circuit apparatus shall not exceed the difference between exhalation resistance (§ 84.91(e)) and 10 cm. (4 inches) water-column height.

§ 84.91 Breathing resistance test; exhalation.

(a) Resistance to exhalation airflow will be measured in the facepiece or mouthpiece of open-circuit apparatus with air flowing at a continuous rate of 85 liters per minute.

(b) The exhalation resistance of demand apparatus shall not exceed 25 mm. (1 inch) water-column height.

(c) The exhalation resistance of pressure-demand apparatus shall not exceed the static pressure in the facepiece by more than 51 mm. (2 inches) water-column height.

(d) The static pressure (at zero flow) in the facepiece shall not exceed 38 mm. (1.5 inches) water-column height.

(e) Resistance to exhalation airflow will be measured in the facepiece or mouthpiece of closed-circuit apparatus with a breathing machine as described in § 84.88, and the exhalation resistance shall not exceed 51 mm. (2 inches) water-column height.

§ 84.92 Exhalation valve leakage test.

(a) Dry exhalation valves and valve seats will be subjected to a suction of 25 mm. (1 inch) water-column height while in a normal operating position.

(b) Leakage between the valve and the valve seat shall not exceed 30 milliliters per minute.

§ 84.93 Gas flow test; open-circuit apparatus.

(a) A static-flow test will be performed on all open-circuit apparatus.

(b) The flow from the apparatus shall be greater than 200 liters per minute when the pressure in the facepiece of demand-apparatus is lowered by 51 mm. (2 inches) water-column height when full container pressure is applied.

(c) Where pressure demand apparatus are tested, the flow will be measured at zero gage pressure in the facepiece.

(d) Where apparatus with compressed-breathing-gas containers are tested, the flow test shall also be made with 3,450 kN/m.^{2} (500 p.s.i.g.) container pressure applied.

§ 84.94 Gas flow test; closed-circuit apparatus.

(a) Where oxygen is supplied by a constant-flow device only, the rate of flow shall be at least 3 liters per minute for the entire rated service time of the apparatus.

(b) Where constant flow is used in conjunction with demand flow, the constant flow shall be greater than 1.5 liters per minute for the entire rated service time.

(c) All demand-flow devices shall provide at least 30 liters of oxygen per minute when in the fully open position.

§ 84.95 Service time test; open-circuit apparatus.

(a) Service time will be measured with a breathing machine as described in § 84.88.

(b) The open-circuit apparatus will be classified according to the length of time it supplies air or oxygen to the breathing machine.

(c) The service time obtained on this test will be used to classify the open-circuit apparatus in accordance with § 84.53.

§ 84.96 Service time test; closed-circuit apparatus.

(a) The closed-circuit apparatus will be classified according to the length of time it supplies adequate breathing gas to the wearer during man test No. 4 described in Table 4 of this subpart.

(b) The service time obtained on man test No. 4 will be used to classify the closed-circuit apparatus in accordance with § 84.53.

§ 84.97 Test for carbon dioxide in inspired gas; open- and closed-circuit apparatus; maximum allowable limits.

(a) Open-circuit apparatus:

(1) The concentration of carbon dioxide in inspired gas in open-circuit apparatus will be measured at the mouth while the apparatus mounted on a dummy head is operated by a breathing machine. An acceptable method for measuring the concentration of carbon dioxide is described in Bureau of Mines Report of Investigations 6865, A Machine-Test Method for Measuring Carbon Dioxide in the Inspired Air of Self-Contained Breathing Apparatus, 1966. Copies of Report of Investigations 6865 may be inspected or obtained from the NIOSH, Certification and Quality Assurance Branch, 1095 Willowdale Road, Morgantown, WV. 26505–2888.

(2) The breathing rate will be 14.5 respirations per minute with a minute-volume of 10.5 liters.

(3) A sedentary breathing machine cam will be used.

(4) The apparatus will be tested at a temperature of 27 ± 2° C. (80 ± 5° F.).

(5) A concentration of 5 percent carbon dioxide in air will be exhaled into the facepiece.

(b) Closed-circuit apparatus. The concentration of carbon dioxide in inspired gas in closed-circuit apparatus will be measured at the mouth while the parts of the apparatus contributing to dead-air space are mounted on a dummy head and operated by the breathing machine as in paragraphs (a)(1) through (5) of this section.

(c) During the testing required by paragraphs (a) and (b) of this section, the concentration of carbon dioxide in inspired gas at the mouth will be continuously recorded, and the maximum average concentration during the inhalation portion of the breathing cycle shall not exceed the following limits:

Where the service time is	Maximum allowable average concentration of carbon dioxide in inspired air percent by volume
Not more than 30 minutes	2.5
1 hour	2.0
2 hours	1.5
3 hours	1.0
4 hours	1.0

(d) In addition to the test requirements for closed-circuit apparatus set forth in paragraph (b) of this section, gas samples will be taken during the course of the man tests described in Tables 1, 2, 3, and 4 of this subpart. These gas samples will be taken from the closed-circuit apparatus at a point downstream of the carbon dioxide sorbent, and they shall not contain more than 0.5 percent carbon dioxide at any time, except on apparatus for escape only, using a mouthpiece only, the sample shall not contain more than 1.5 percent carbon dioxide at any time.

§ 84.98 Tests during low temperature operation.

(a) The applicant shall specify the minimum temperature for safe operation and two persons will perform the tests described in paragraphs (c) and (d) of this section, wearing the apparatus according to applicant's directions. At the specified temperature, the apparatus shall meet all the requirements described in paragraph (e) of this section.

(b) The apparatus will be precooled at the specified minimum temperature for 4 hours.

(c) The apparatus will be worn in the low temperature chamber for 30 minutes, or for the service time of the apparatus, whichever is less.

(d) During the test period, alternate 1-minute periods of exercise and rest will be required with the exercise periods consisting of stepping onto and off a box 21.5 cm. (8½ inches) high at a rate of 30 cycles per minute.

(e)(1) The apparatus shall function satisfactorily at the specified minimum temperature on duplicate tests.

(2) The wearer shall have sufficient unobscured vision to perform the work.

(3) The wearer shall not experience undue discomfort because of airflow restriction or other physical or chemical changes in the operation of the apparatus.

(f) Auxiliary low-temperature parts which are commercially available to the user may be used on the apparatus to meet the requirements described in paragraph (e) of this section.

§ 84.99 Man tests; testing conditions; general requirements.

(a) The man tests described in Tables 1, 2, 3, and 4 of this subpart represent the workload performed in the mining, mineral, or allied industries by a person wearing the apparatus tested.

(b) The apparatus tested will be worn by Institute personnel trained in the use of self-contained breathing apparatus, and the wearer will, before participating in these tests, pass a physical

examination conducted by a qualified physician.

(c) All man tests will be conducted by the Institute.

(d) The apparatus will be examined before each man test to ensure that it is in proper working order.

(e) Breathing resistance will be measured within the facepiece or mouthpiece and the wearer's pulse and respiration rate will be recorded during each 2 minute sample period prescribed in tests 1, 2, 3, and 4.

(f) Man tests 1, 2, 3, 4, 5, and 6 will be conducted in duplicate.

(g) If man tests are not completed through no fault of the apparatus, the test will be repeated.

§ 84.100 Man tests 1, 2, 3, and 4; requirements.

Man tests 1, 2, 3, and 4, set forth in Tables 1, 2, 3, and 4 of this subpart, respectively, prescribe the duration and sequence of specific activities. These tests will be conducted to—

(a) Familiarize the wearer with the apparatus during use;

(b) Provide for a gradual increase in activity;

(c) Evaluate the apparatus under different types of work and physical orientation; and

(d) Provide information on the operating and breathing characteristics of the apparatus during actual use.

§ 84.101 Man test 5; requirements.

(a) Test 5 will be conducted to determine the maximum length of time the apparatus will supply the respiratory needs of the wearer while he is sitting at rest.

(b) The wearer will manipulate the devices controlling the supply of breathing gas to the advantage of the apparatus.

(c) Samples of inspiration from within the apparatus facepiece or mouthpiece shall be taken once every 15 minutes, and shall meet the minimum requirement for oxygen specified in § 84.79(a), and the maximum allowable average concentration of carbon dioxide specified in § 84.97(c).

(d) One sample of inspiration will be taken in the case of 3-, 5-, and 10-minute apparatus.

§ 84.102 Man test 6; requirements.

(a) Man test 6 will be conducted with respect to liquefied breathing gas apparatus only.

(b) This test will be conducted to evaluate operation of the apparatus in other than vertical positions.

(c) The wearer will lie face downward for one-fourth the service life of the apparatus with a full charge of liquefied breathing gas, and then a one-quarter full charge of liquefied breathing gas.

(d) The test will be repeated with the wearer lying on each side and on his back.

(e) The oxygen content of the gas supplied to the wearer by the apparatus will be continuously measured.

§ 84.103 Man tests; performance requirements.

(a) The apparatus shall satisfy the respiratory requirements of the wearer for the classified service time.

(b) Fogging of the eyepiece shall not obscure the wearer's vision, and the wearer shall not experience undue discomfort because of fit or other characteristics of the apparatus.

(c) When the ambient temperature during testing is 24±6 °C. (75±10 °F.), the maximum temperature of inspired air recorded during man tests shall not exceed the following, after correction for deviation from 24 °C. (75 °F.):

Where service life of apparatus is—	Where percent relative humidity of inspired air is—	Maximum permissible temperature of inspired air shall not exceed—	
		°F.	°C.
¼ hour or less	0–100	135	57
¼ hour to ¾ hour	0–50	125	52
	50–100	[1] 110	[1] 43
1 to 2 hours	0–50	115	46
	50–100	[1] 105	[1] 41
3 hours	0–50	110	43
	50–100	[1] 100	[1] 38
4 hours	0–50	105	41
	50–100	[1] 95	[1] 35

[1] Where percent relative humidity is 50–100 and apparatus is designed for escape only, these maximum permissible temperatures will be increased by 5°C (10°F).

§ 84.104 Gas tightness test; minimum requirements.

(a) Each apparatus will be tested for tightness by persons wearing it in an atmosphere of 1,000 p.p.m. isoamyl acetate.

(b) Six persons will each wear the apparatus in the test concentrations specified in paragraph (a) of this section for 2 minutes and none shall detect the odor or taste of the test vapor.

Tables to Subpart H of Part 84

TABLE 1.—DURATION AND SEQUENCE OF SPECIFIC ACTIVITIES FOR TEST 1, IN MINUTES

[42 CFR part 84, subpart H]

Activity	Service time—							
	3 minutes	5 minutes	10 minutes	15 minutes	30 minutes	45 minutes	1 hour	2, 3, and 4 hours
Sampling and readings	.....	.....	.....	2	2	2	2	Perform 1 hour test 2, 3, or 4 times respectively.

TABLE 1.—DURATION AND SEQUENCE OF SPECIFIC ACTIVITIES FOR TEST 1, IN MINUTES—Continued

[42 CFR part 84, subpart H]

Activity	Service time—							
	3 minutes	5 minutes	10 minutes	15 minutes	30 minutes	45 minutes	1 hour	2, 3, and 4 hours
Walks at 4.8 km. (3 miles) per hour.	3	5	3	4	8	12	18	
Sampling and readings ..	.....	.....	2	2	2	2	2	
Walks at 4.8 km. (3 miles) per hour.	.....	.....	3	5	8	12	18	
Sampling and readings ..	.....	.....	2	2	2	2	2	
Walks at 4.8 km. (3 miles) per hour.	.....	.....	.....	.....	6	13	16	
Sampling and readings ..	.....	.....	.....	.....	2	2	2	

TABLE 2.—DURATION AND SEQUENCE OF SPECIFIC ACTIVITIES FOR TEST 2, IN MINUTES

[42 CFR part 84, subpart H]

Activity	Service time—							
	3 minutes	5 minutes	10 minutes	15 minutes	30 minutes	45 minutes	1 hour	2, 3 and 4 hours [1]
Sampling and readings	.....	.....	.....	2	2	2	2	2
Walks at 4.8 km. (3 miles) per hour.	.....	.....	1	1	3	4	6	10.
Carries 23 kg. (50 pound) weight over overcast.	.....	.....	1 time in 2 minutes.	1 time in 2 minutes.	2 times in 4 minutes.	3 times in 6 minutes.	4 times in 8 minutes.	5 times in 10 minutes.
Walks at 4.8 km. (3 miles) per hour.	.....	.....	.....	1	3	3	3	5.
Climbs vertical treadmill [2] (or equivalent).	1	1	1	1	1	1	1	1.
Walks at 4.8 km. (3 miles) per hour.	.....	1	1	.....	.....	2	3	5
Climbs vertical treadmill (or equivalent).	.....	1	.....	.....	.....	1	1	1.
Sampling and readings	.....	.....	.....	.....	2	2	2	2.
Walks at 4.8 km. (3 miles) per hour.	.....	.....	.....	2	2	3	5	11.
Climbs vertical treadmill (or equivalent).	.....	.....	.....	1	1	1	1	1.
Carries 23 kg. (50 pound) weight over overcast.	.....	.....	.....	1 time in 2 minutes.	3 times in 6 minutes.	4 times in 8 minutes.	5 times in 10 minutes.	5 times in 10 minutes.
Sampling and readings	.....	.....	2	.....	.....	2	2	2.
Walks at 4.8 km. (3 miles) per hour.	.....	.....	.....	1	3	3	3	
Climbs vertical treadmill (or equivalent).	.....	.....	1	1	1	1	1	Then repeat above activities once.
Walks at 4.8 km. (3 miles) per hour.	.....	.....	2	.....	.....	2	3	
Climbs vertical treadmill (or equivalent).	.....	.....	.....	.....	.....	1	1	
Carries 20 kg. (45 pound) weight and walks at 4.8 km. (3 miles) per hour.	1	.....	.....	.....	.....	.....	2	
Walks at 4.8 km. (3 miles) per hour.	1	2	.....	.....	.....	1	4	
Sampling and readings	.....	.....	.....	2	2	2	2	

[1] Total test time for Test 2 for 2-hour, 3-hour, and 4-hour apparatus is 2 hours.

[2] Treadmill shall be inclined 15° from vertical and operated at a speed of 1 foot per second.

TABLE 3.—DURATION AND SEQUENCE OF SPECIFIC ACTIVITIES FOR TEST 3, IN MINUTES

[42 CFR part 84, subpart H]

Activity	Service time—							
	3 minutes	5 minutes	10 minutes	15 minutes	30 minutes	45 minutes	1 hour	2, 3 and 4 hours [1]
Sampling and readings				2	2	2	2	([2])
Walks at 4.8 km. (3 miles) per hour.			1	1	2	2	3	
Runs at 9.7 km. (6 miles) per hour.	1	1	1	1	1	1	1	
Pulls 20 kg. (45 pound) weight to 5 feet.		15 times in 1 minute.		30 times in 2 minutes.	30 times in 2 minutes.	30 times in 2 minutes.	60 times in 6 minutes.	
Lies on side	1/2	1	1	2	3	4	5	
Lies on back	1/2	1	1	2	2	3	3	
Crawls on hands and knees	1	1	1	2	2	2	2	
Sampling and readings			2		2	2	2	
Runs at 9.7 km. (6 miles) per hour.				1	1	1	1	
Walks at 4.8 km. (3 miles) per hour.					2	8	10	
Pulls 20 kg. (45 pound) weight to 5 feet.			30 times in 2 minutes.		60 times in 6 minutes.	60 times in 6 minutes.	60 times in 6 minutes.	
Sampling and readings				2		2	2	
Walks at 4.8 km. (3 miles) per hour.			1		3	4	10	
Lies on side						2	4	
Lies on back						2	1	
Sampling and readings					2	2	2	

[1] Total test time for Test 3 for 2-hour, 3-hour, and 4-hour apparatus is 2 hours.
[2] Perform test No. 3 for 1 hr. apparatus; then perform test No. 1 for 1 hour apparatus.

TABLE 4.—DURATION AND SEQUENCE OF SPECIFIC ACTIVITIES FOR TEST 4, IN MINUTES

[42 CFR part 84, subpart H]

Activity	Service time—									
	3 minutes	5 minutes	10 minutes	15 minutes	30 minutes	45 minutes	1 hour	2 hours	3 hours	4 hours
Sampling and readings				2	2	2	2	(2)	(3)	(4)
Walks at 4.8 km. (3 miles) per hour				1	2	2	2			
Climbs vertical treadmill [1] (or equivalent)	1	1	1	1	1	1	1			
Walks at 4.8 km. (3 miles) per hour		1	1	1	2	2	2			
Pulls 20 kg. (45 pound) weight to 5 feet		30 times in 2 minutes.	30 times in 2 minutes.	30 times in 2 minutes.	60 times in 5 minutes.	60 times in 5 minutes.	60 times in 5 minutes.			
Walks at 4.8 km. (3 miles) per hour			1	1	1	2	3			
Carries 23 kg. (50 pound) weight over overcast				1 time in 1 minute.	1 time in 1 minute.	2 times in 3 minutes.	4 times in 8 minutes.			
Sampling and readings			2		2	2	2			
Walks at 4.8 km. (3 miles) per hour				1	3	3	4			
Runs at 9.7 km. (6 miles) per hour		1	1	1	1	1	1			
Carries 23 kg. (50 pound) weight over overcast			1 time in 1 minute.	1 time in 1 minute.	2 times in 3 minutes.	4 times in 6 minutes.	6 times in 9 minutes.			
Pulls 20 kg (45 pound) weight to 5 feet	15 times in 1 minute.			15 times in 1 minute.	60 times in 5 minutes.	30 times in 2 minutes.	36 times in 3 minutes.			
Sampling and readings				2	2	2	2			
Walks at 4.8 km. (3 miles) per hour	1		1			2	6			
Pulls 20 kg. (45 pound) weight to 5 feet						60 times in 5 minutes.	60 times in 5 minutes.			
Carries 20 kg. (45 pound) weight and walks at 4.8 km. (3 miles) per hour.						3	3			
Sampling and readings						2	2			

[1] Treadmill shall be inclined 15° from vertical and operated at a speed of 30 cm. (1 foot) per second.
[2] Perform test No. 1 for 30-minute apparatus; then perform test No. 4 for 1-hour apparatus; then perform test No. 1 for 30-minute apparatus.
[3] Perform test No. 1 for 1-hour apparatus; then perform test No. 4 for 1-hour apparatus; then perform test No. 1 for 1-hour apparatus.
[4] Perform test No. 1 for 1-hour apparatus; then perform test No. 4 for 1-hour apparatus; then perform test No. 1 for 1-hour apparatus twice (i.e., two one-hour tests).

Subpart I—Gas Masks

§ 84.110 Gas masks; description.

(a) Gas masks including all completely assembled air purifying masks designed for use as respiratory protection during entry into atmospheres not immediately dangerous to life or health or escape only from hazardous atmospheres containing adequate oxygen to support life are described as follows:

(1) *Front-mounted or back-mounted gas mask.* A gas mask which consists of a full facepiece, a breathing tube, a canister at the front or back, a canister harness, and associated connections.

(2) *Chin-style gas mask.* A gas mask which consists of a full facepiece, a canister which is usually attached to the facepiece, and associated connections.

(3) *Escape gas mask.* A gas mask designed for use during escape only from hazardous atmospheres which consists of a facepiece or mouthpiece, a canister, and associated connections.

(b) Gas masks shall be further described according to the types of gases or vapors against which they are designed to provide respiratory protection, as follows:

Type of front-mounted or back-mounted gas mask:
Acid gas [1 2 3]
Ammonia
Carbon monoxide
Organic Vapor [1 2 3]
Other gas(es) and vapor(s) [1 2 3]
Combination of two or more of the above gases and vapors.[1 2 3]
Combination of acid gas, ammonia, carbon monoxide, and organic vapors.[1 2 3]
Type of chin-style gas mask:
Acid gas [1 2 3]
Ammonia
Carbon monoxide
Organic vapor [1 2 3]
Other gas(es) and vapor [1 2 3]
Combination of two or more of the above gases and vapors.[1 2 3]
Type of escape gas mask:
Acid gas [1 2 3 4]
Ammonia [4]
Carbon monoxide
Organic vapor [1 2 3 4]
Other gas(s) and vapor(s) [1 2 3 4]
Combination of two or more of the above gases and vapors. [1 2 3 4]

[1] Approval may be for acid gases or organic vapors as a class or for specific acid gases or organic vapors.

[2] Not for use against gases or vapors with poor warning properties (except where MSHA or Occupational Safety and Health Administration standards permit such use for a specific gas or vapor), or those which generate high heats or reaction with sorbent materials in the canister.

[3] Use of the gas mask may be limited by factors such as lower explosive limit, toxicological effects, and facepiece fit. Limitations on gas mask service life and sorbent capacity limitations shall be specified by the applicant in instructions for selection, use and maintenance of the gas mask.

[4] Eye protection may be required in certain concentrations of gases and vapors.

(c) Gas masks for respiratory protection against gases and vapors other than those specified in paragraph (b) of this section, may be approved upon submittal of an application in writing for approval to the Certification and Quality Assurance Branch listing the gas or vapor and suggested maximum use concentration for the specific type of gas mask. The Institute will consider the application and accept or reject it on the basis of effect on the wearer's health and safety and any field experience in use of gas masks for such exposures. If the application is accepted, the Institute will test such masks in accordance with the requirements of this subpart.

§ 84.111 Gas masks; required components.

(a) Each gas mask described in § 84.110 shall, where its design requires, contain the following component parts:

(1) Facepiece or mouthpiece and noseclip;

(2) Canister or cartridge;

(3) Canister harness;

(4) External check valve; and

(5) Breathing tube.

(b) The components of each gas mask shall meet the minimum construction requirements set forth in subpart G of this part.

§ 84.112 Canisters and cartridges in parallel; resistance requirements.

Where two or more canisters or cartridges are used in parallel, their resistance to airflow shall be essentially equal.

§ 84.113 Canisters and cartridges; color and markings; requirements.

The color and markings of all canisters and cartridges or labels shall conform with the requirements of the American National Standards Institute, American National Standard for Identification of Air-Purifying Respirator Canisters and Cartridges, ANSI K13.1–1973. ANSI K13.1 is incorporated by reference and has been approved by the Director of the Federal Register in accordance with 5 U.S.C. 552(a) and 1 CFR part 51. Copies may be obtained from American National Standards Institute, Inc., 1430 Broadway, New York, NY 10018. Copies may be inspected at the NIOSH, Certification and Quality Assurance Branch, 1095 Willowdale Road, Morgantown, WV 26505–2888, or at the Office of the Federal Register, 800 North Capitol Street, NW., suite 700, Washington, DC.

§ 84.114 Filters used with canisters and cartridges; location; replacement.

(a) Particulate matter filters used in conjunction with a canister or cartridge shall be located on the inlet side of the canister or cartridge.

(b) Filters shall be incorporated in or firmly attached to the canister or cartridge and each filter assembly shall, where applicable, be designed to permit its easy removal from and replacement in the canister or cartridge.

§ 84.115 Breathing tubes; minimum requirements.

Flexible breathing tubes used in conjunction with gas masks shall be designed and constructed to prevent:

(a) Restriction of free head movement;

(b) Disturbance of the fit of facepieces or mouthpieces;

(c) Interference with the wearer's activities; and

(d) Shutoff of airflow due to kinking, or from chin or arm pressure.

§ 84.116 Harnesses; installation and construction; minimum requirements.

(a) Each gas mask shall, where necessary, be equipped with a suitable harness designed and constructed to hold the components of the gas mask in position against the wearer's body.

(b) Harnesses shall be designed and constructed to permit easy removal and replacement of gas mask parts, and where applicable, provide for holding a full facepiece in the ready position when not in use.

§ 84.117 Gas mask containers; minimum requirements.

(a) Gas masks shall be equipped with a substantial, durable container bearing markings which show the applicant's name, the type and commercial designation of mask it contains and all appropriate approval labels.

(b) Containers for gas masks shall be designed and constructed to permit easy removal of the mask.

§ 84.118 Half-mask facepieces, full facepieces, and mouthpieces; fit; minimum requirements.

(a) Half-mask facepieces and full facepieces shall be designed and constructed to fit persons with various facial shapes and sizes either:

(1) By providing more than one facepiece size; or

(2) By providing one facepiece size which will fit varying facial shapes and sizes.

(b) Full facepieces shall provide for optional use of corrective spectacles or

lenses, which shall not reduce the respiratory protective qualities of the gas mask.

(c) Half-mask facepieces shall not interfere with the fit of common industrial safety spectacles, as determined by the Institute's facepiece tests in § 84.124.

(d) Gas masks with mouthpieces shall be equipped with noseclips which are securely attached to the mouthpiece or gas mask and provide an airtight seal.

(e) Facepieces shall be designed to prevent eyepiece fogging.

§ 84.119 Facepieces; eyepieces; minimum requirements.

(a) Full facepieces shall be designed and constructed to provide adequate vision which is not distorted by the eye.

(b) All eyepieces shall be designed and constructed to be impact and penetration resistant. Federal Specification, Mask, Air Line: and Respirator, Air Filtering, Industrial, GGG–M–125d, October 11, 1965 with interim amendment-1, July 30, 1969, is an example of an appropriate standard for determining impact and penetration resistance. Copies of GGG–M–125d may be obtained from the NIOSH, Certification and Quality Assurance Branch, 1095 Willowdale Road, Morgantown, WV 26505–2888.

§ 84.120 Inhalation and exhalation valves; minimum requirements.

(a) Inhalation and exhalation valves shall be provided where necessary and protected against damage and distortion.

(b) Inhalation valves shall be designed and constructed to prevent excessive exhaled air from adversely affecting cartridges, canisters, and filters.

(c) Exhalation valves shall be protected against external influence, and designed and constructed to prevent inward leakage of contaminated air.

§ 84.121 Head harnesses; minimum requirements.

(a) Facepieces shall be equipped with adjustable and replaceable head harnesses, designed and constructed to provide adequate tension during use and an even distribution of pressure over the entire area in contact with the face.

(b) Mouthpieces shall be equipped, where applicable, with adjustable and replaceable harnesses designed and constructed to hold the mouthpiece in place.

§ 84.122 Breathing resistance test; minimum requirements.

(a) Resistance to airflow will be measured in the facepiece or mouthpiece of a gas mask mounted on a breathing machine both before and after each test conducted in accordance with §§ 84.124, 84.125, and 84.126, with air flowing at a continuous rate of 85 liters per minute.

(b) The maximum allowable resistance requirements for gas masks are as follows:

MAXIMUM RESISTANCE

[mm. water-column height]

Type of gas mask	Inhalation		Exhalation
	Initial	Final [1]	
Front-mounted or back-mounted (without particulate filter)	60	75	20
Front-mounted or back-mounted (with approved particulate filter)	70	85	20
Chin-style (without particulate filter)	40	55	20
Chin-style (with approved particulate filter)	65	80	20
Escape (without particulate filter)	60	75	20
Escape (with approved particulate filter)	70	85	20

[1] Measured at end of the service life specified in Tables 5, 6, and 7 of this subpart.

§ 84.123 Exhalation valve leakage test.

(a) Dry exhalation valves and valve seats will be subjected to a suction of 25 mm. water-column height while in a normal operating position.

(b) Leakage between the valve and valve seat shall not exceed 30 milliliters per minute.

§ 84.124 Facepiece tests; minimum requirements.

(a) The complete gas mask will be fitted to the faces of persons having varying facial shapes and sizes.

(b) Where the applicant specifies a facepiece size or sizes for the gas mask, together with the approximate measurements of faces they are designed to fit, the Institute will insure that test subjects suit such facial measurements.

(c) Any gas mask parts which must be removed to perform the facepiece or mouthpiece fit test shall be replaceable without special tools and without disturbing the facepiece or mouthpiece fit.

(d) The facepiece or mouthpiece fit test, using positive or negative pressure recommended by the applicant and described in his instructions will be used before each test specified in paragraph (e) of this section, and in § 84.125.

(e)(1) Each wearer will enter a chamber containing 100 p.p.m. isoamyl acetate vapor for a half-mask facepiece and 1,000 p.p.m. isoamyl acetate vapor for a full facepiece or mouthpiece.

(2) The facepiece or mouthpiece may be adjusted, if necessary, in the test chamber before starting the tests.

(3) Each wearer will remain in the chamber for 8 minutes while performing the following activities:

(i) Two minutes, nodding and turning head;

(ii) Two minutes, calisthenic arm movements;

(iii) Two minutes, running in place; and

(iv) Two minutes, pumping with a tire pump into a 28 liter (1 cubic foot) container.

(4) Each wearer shall not detect the odor of isoamyl acetate during the test.

§ 84.125 Particulate tests; canisters containing particulate filters; minimum requirements.

Gas mask canisters containing filters for protection against particulates (e.g. dusts, fumes, mists, and smokes) in combination with gases, vapors, or gases and vapors, shall also comply with the requirements as prescribed in §§ 84.170 through 84.183, except for the airflow resistance test of § 84.181.

§ 84.126 Canister bench tests; minimum requirements.

(a)(1) Bench tests, except for carbon monoxide tests, will be made on an apparatus that allows the test atmosphere at 50±5 percent relative humidity and room temperature (25±2.5 °C.) to enter the canister continuously at concentrations and rates of flow

specified in Tables 5, 6, and 7 of this subpart.

(2) Three canisters will be removed from containers and tested as received from the applicant.

(3) Two canisters, other than those described in paragraph (a)(2) of this section, will be equilibrated at room temperature by passing 25 percent relative humidity air through them at 64 liters per minute for 6 hours.

(4) Two canisters, other than those described in paragraphs (a) (2) and (3) of this section, will be equilibrated at room temperature by passing 85 percent relative humidity air through them at 64 liters per minute for 6 hours.

(5) The equilibrated canisters will be resealed, kept in an upright position at room temperature, and tested within 18 hours.

(b) Front-mounted and back-mounted gas mask canisters will be tested and shall meet the minimum requirements set forth in Table 5 of this subpart.

(c)(1) Front-mounted, and back-mounted, and chin-style canisters designated as providing respiratory protection against gases, ammonia, organic vapors, carbon monoxide and particulate contaminants shall have a window or other indicator to warn the gas mask wearer when the canister will no longer satisfactorily remove carbon monoxide from the inhaled air.

(2) Other types of front- and back-mounted canisters may also be equipped with a window or other indicator to warn of imminent leakage of other gases or vapors.

(3) The window indicator canisters will be tested as regular canisters, but shall show a satisfactory indicator change or other warning before the allowable canister penetration has occurred.

(d) Chin-style gas mask canisters shall meet the minimum requirements set forth in Table 6 of this subpart.

(e) Escape gas mask canisters shall meet the minimum requirements set forth in Table 7 of this subpart.

Tables to Subpart I of Part 84

TABLE 5.—CANISTER BENCH TESTS AND REQUIREMENTS FOR FRONT-MOUNTED AND BACK-MOUNTED GAS MASK CANISTERS

[42 CFR part 84, subpart I]

Canister type	Test condition	Test atmosphere			Number of tests	Maximum allowable penetratin (parts per million)	Minimum service life (minutes) [1]
		Gas or vapor	Concentration (parts per million)	Flow rate (liters per minute)			
Acid gas	As received	SO_2	20,000	64	3	5	12
	Equilibrated	Cl_2	20,000	64	3	5	12
		SO_2	20,000	32	4	5	12
		Cl_2	20,000	32	4	5	12
Organic vapor	As received	CCl_4	20,000	64	3	5	12
	Equilibrated	CCl_4	20,000	32	4	5	12
Ammonia	As received	NH_3	30,000	64	3	50	12
	Equilibrated	NH_3	30,000	32	4	50	12
Carbon monoxide	As received	CO	20,000	[4] 64	2	([3])	60
	Equilibrated	CO	5,000	[2] 32	3	([3])	60
		CO	3,000	[2] 32	3	([3])	60
Combination of 2 or 3 of above types [5]							
Combination of all above types [6]							

[1] Minimum life will be determined at the indicated penetration.
[2] Relative humidity of test atmosphere will be 95±3pct; temperature of test atmosphere will be 25±2.5° C.
[3] Maximum allowable CO penetration will be 385 cm^3 during the minimum life. The penetration shall not exceed 500 p/m during this time.
[4] Relative humidity of test atmosphere will be 95±3pct; temperature of test atmosphere entering the test fixture will be 0±2.5°C − 0°C.
[5] Test conditions and requirements will be applicable as shown in this table.
[6] Test conditions and requirements will be applicable as shown in this table, except the minimum service lives for acid gas, organic vapor, and ammonia will be 6 min instead of 12 min.

TABLE 6—Canister Bench Tests and Requirements for Chin-Style Gas Mask Canisters

[42 CFR part 84, subpart I]

Canister type	Test condition	Test atmosphere			Number of tests	Maximum allowable penetration (parts per million)	Minimum service life (minutes) [1]
		Gas or vapor	Concentration (parts per million)	Flow rate (liters per minute)			
Acid gas	As received Equilibrated	SO_2	50,000	64	3	5	12
		Cl_2	5,000	64	3	5	12
		SO_2	5,000	32	4	5	12
		Cl_2	5,000	32	4	5	12
Organic vapor	As received Equilibrated	CCl_4	5,000	64	3	5	12
		CCl_4	5,000	32	4	5	12
Ammonia	As received Equilibrated	NH_3	5,000	64	3	50	12
	As received Equilibrated	NH_3	5,000	32	4	50	12
Carbon monoxide	As received	CO	20,000	[2] 64	2	([3])	60
		CO	5,000	[4] 32	3	([3])	60

TABLE 6—Canister Bench Tests and Requirements for Chin-Style Gas Mask Canisters
[42 CFR part 84, subpart I]

Canister type	Test condition	Test atmosphere			Number of tests	Maximum allowable penetration (parts per million)	Minimum service life (minutes) [1]
		Gas or vapor	Concentration (parts per million)	Flow rate (liters per minute)			
Combination of 2 or 3 of above types [5]		CO	3,000	[2] 32	3	([3])	60
Combination of all above types [6]							

[1] Minimum life will be determined at the indicated penetration.
[2] Relative humidity of test atmosphere will be 95 ± 3pct; temperature of test atmosphere will be 25 ± 2.5° C.
[3] Maximum allowable CO penetration will be 385 cm^3 during the minimum life. The penetration shall not exceed 500 p/m during this time.
[4] Relative humidity of test atmosphere will be 95 ± 3pct; temperature of test atmosphere entering the test fixture will be 0 ± 2.5° C − 0° C.
[5] Test conditions and requirements will be applicable as shown in this table.
[6] Test conditions and requirements will be applicable as shown in this table, except the minimum service lives for acid gas, organic vapor, and ammonia will be 6 min instead of 12 min.

TABLE 7.—CANISTER BENCH TESTS AND REQUIREMENTS FOR ESCAPE GAS MASK CANISTERS
[42 CFR part 84, subpart I]

Canister type	Test condition	Test atmosphere			Number of tests	Maximum allowable penetration (parts per million)	Minimum service life (minutes) [1]
		Gas or vapor	Concentration (parts per million)	Flow rate (liters per minute)			
Acid gas	As received	SO_2	5,000	64	3	5	12
	Equilibrated	Cl_2	5,000	64	3	5	12
		SO_2	5,000	32	4	5	12
		Cl_2	5,000	32	4	5	12
Organic vapor	As received	CCl_4	5,000	64	3	5	12
	Equilibrated	CCl_4	5,000	32	4	5	12
Ammonia	As received	NH_3	5,000	64	3	50	12
	Equilibrated	NH_3	5,000	32	4	50	12
Carbon monoxide	As received	CO	10,000	[2] 32	2	([3])	[4] 60
		CO	5,000	[5] 32	3	([3])	60
		CO	3,000	[2] 32	3	([3])	60

[1] Minimum life will be determined at the indicated penetration.
[2] Relative humidity of test atmosphere will be 95 ± 3pct; temperature of test atmosphere will be 25±2.5° C.
[3] Maximum allowable CO penetration will be 385 cm^3 during the minimum life. The penetration shall not exceed 500 p/m during this time.
[4] If effluent temperature exceeds 100° C during this test, the escape gas mask shall be equipped with an effective heat exchanger.
[5] Relative humidity of test atmosphere will be 95±3 pct; temperature of test atmosphere entering the test fixture will be 0±2.5° C—0° C.

Subpart J—Supplied-Air Respirators

§ 84.130 Supplied-air respirators; description.

Supplied-air respirators, including all completely assembled respirators designed for use as respiratory protection during entry into and escape from atmospheres not immediately dangerous to life or health are described as follows:

(a) *Type ''A'' supplied-air respirators.* A hose mask respirator, for entry into and escape from atmospheres not immediately dangerous to life or health, which consists of a motor-driven or hand-operated blower that permits the free entrance of air when the blower is not operating, a strong large-diameter hose having a low resistance to airflow, a harness to which the hose and the life-line are attached and a tight-fitting facepiece.

(b) *Type ''AE'' supplied-air respirators.* A Type ''A'' supplied-air respirator equipped with additional devices designed to protect the wearer's head and neck against impact and abrasion from rebounding abrasive material, and with shielding material such as plastic, glass, woven wire, sheet metal, or other suitable material to protect the window(s) of facepieces, hoods, and helmets which do not unduly interfere with the wearer's vision and permit easy access to the external surface of such window(s) for cleaning.

(c) *Type ''B'' supplied-air respirators.* A hose mask respirator, for entry into and escape from atmospheres not immediately dangerous to life or health, which consists of a strong large-diameter hose with low resistance to airflow through which the user draws inspired air by means of his lungs alone, a harness to which the hose is attached, and a tight-fitting facepiece.

(d) *Type ''BE'' supplied-air respirators.* A type ''B'' supplied-air respirator equipped with additional devices designed to protect the wearer's head and neck against impact and abrasion from rebounding abrasive material, and with shielding material such as plastic, glass, woven wire, sheet metal, or other suitable material to protect the window(s) of facepieces, hoods, and helmets which do not unduly interfere with the wearer's vision and permit easy access to the external surface of such window(s) for cleaning.

(e) *Type ''C'' supplied-air respirators.* An airline respirator, for entry into and escape from atmospheres not immediately dangerous to life or health, which consists of a source of respirable breathing air, a hose, a detachable coupling, a control valve, orifice, a

demand valve or pressure demand valve, an arrangement for attaching the hose to the wearer, and a facepiece, hood, or helmet.

(f) *Type ''CE'' supplied-air respirators.* A type ''C'' supplied-air respirator equipped with additional devices designed to protect the wearer's head and neck against impact and abrasion from rebounding abrasive material, and with shielding material such as plastic, glass, woven wire, sheet metal, or other suitable material to protect the window(s) of facepieces, hoods, and helmets which do not unduly interfere with the wearer's vision and permit easy access to the external surface of such window(s) for cleaning.

§ 84.131 Supplied-air respirators; required components.

(a) Each supplied-air respirator described in § 84.130 shall, where its design requires, contain the following component parts:

(1) Facepiece, hood, or helmet;

(2) Air supply valve, orifice, or demand or pressure-demand regulator;

(3) Hand operated or motor driven air blower;

(4) Air supply hose;

(5) Detachable couplings;

(6) Flexible breathing tube; and

(7) Respirator harness.

(b) The component parts of each supplied-air respirator shall meet the minimum construction requirements set forth in subpart G of this part.

§ 84.132 Breathing tubes; minimum requirements.

Flexible breathing tubes used in conjunction with supplied-air respirators shall be designed and constructed to prevent:

(a) Restriction of free head movement;

(b) Disturbance of the fit of facepieces, mouthpieces, hoods, or helmets;

(c) Interference with the wearer's activities; and

(d) Shutoff of airflow due to kinking, or from chin or arm pressure.

§ 84.133 Harnesses; installation and construction; minimum requirements.

(a) Each supplied-air respirator shall, where necessary, be equipped with a suitable harness designed and constructed to hold the components of the respirator in position against the wearer's body.

(b) Harnesses shall be designed and constructed to permit easy removal and replacement of respirator parts, and where applicable, provide for holding a full facepiece in the ready position when not in use.

§ 84.134 Respirator containers; minimum requirements.

Supplied-air respirators shall be equipped with a substantial, durable container bearing markings which show the applicant's name, the type and commercial designation of the respirator it contains, and all appropriate approval labels.

§ 84.135 Half-mask facepieces, full facepieces, hoods, and helmets; fit; minimum requirements.

(a) Half-mask facepieces and full facepieces shall be designed and constructed to fit persons with various facial shapes and sizes either:

(1) By providing more than one facepiece size; or

(2) By providing one facepiece size which will fit varying facial shapes and sizes.

(b) Full facepieces shall provide for optional use of corrective spectacles or lenses, which shall not reduce the respiratory protective qualities of the respirator.

(c) Hoods and helmets shall be designed and constructed to fit persons with various head sizes, provide for the optional use of corrective spectacles or lenses, and insure against any restriction of movement by the wearer.

(d) Facepieces, hoods, and helmets shall be designed to prevent eyepiece fogging.

§ 84.136 Facepieces, hoods, and helmets; eyepieces; minimum requirements.

(a) Facepieces, hoods, and helmets shall be designed and constructed to provide adequate vision which is not distorted by the eyepiece.

(b) All eyepieces except those on Types B, BE, C, and CE supplied-air respirators shall be designed and constructed to be impact and penetration resistant. Federal Specification, Mask, Air Line: and Respirator, Air Filtering, Industrial, GGG–M–125d, October 11, 1965 with interim amendment-1, July 30, 1969, is an example of an appropriate standard for determining impact and penetration resistance. Copies of GGG–M–125d may be obtained from the NIOSH, Certification and Quality Assurance Branch, 1095 Willowdale Road, Morgantown, WV 26505–2888.

(c)(1) The eyepieces of AE, BE, and CE type supplied-air respirators shall be shielded by plastic, glass, woven wire, sheet metal, or other suitable material which does not interfere with the vision of the wearer.

(2) Shields shall be mounted and attached to the facepiece to provide easy access to the external surface of the eyepiece for cleaning.

§ 84.137 Inhalation and exhalation valves; check valves; minimum requirements.

(a) Inhalation and exhalation valves shall be provided where necessary and protected against distortion.

(b) Exhalation valves shall be:

(1) Protected against damage and external influence; and

(2) Designed and constructed to prevent inward leakage of contaminated air.

(c) Check valves designed and constructed to allow airflow toward the facepiece only shall be provided in the connections to the facepiece or in the hose fitting near the facepiece of all Type A, AE, B, and BE supplied-air respirators.

§ 84.138 Head harnesses; minimum requirements.

Facepieces shall be equipped with adjustable and replaceable head harnesses which are designed and constructed to provide adequate tension during use, and an even distribution of pressure over the entire area in contact with the face.

§ 84.139 Head and neck protection; supplied-air respirators; minimum requirements.

Type AE, BE, and CE supplied-air respirators shall be designed and constructed to provide protection against impact and abrasion from rebounding abrasive materials to the wearer's head and neck.

§ 84.140 Air velocity and noise levels; hoods and helmets; minimum requirements.

Noise levels generated by the respirator will be measured inside the hood or helmet at maximum airflow obtainable within pressure and hose length requirements and shall not exceed 80 dBA.

§ 84.141 Breathing gas; minimum requirements.

(a) Breathing gas used to supply supplied-air respirators shall be respirable breathing air and contain no less than 19.5 volume-percent of oxygen.

(b) Compressed, gaseous breathing air shall meet the applicable minimum grade requirements for Type I gaseous air set forth in the Compressed Gas Association Commodity Specification for Air, G–7.1, 1966 (Grade D or higher quality). G–7.1 is incorporated by reference and has been approved by the Director of the Federal Register in accordance with 5 U.S.C. 552(a) and 1 CFR part 51. Copies may be obtained from American National Standards Institute, Inc., 1430 Broadway, New York, NY 10018. Copies may be

inspected at the NIOSH, Certification and Quality Assurance Branch, 1095 Willowdale Road, Morgantown, WV 26505–2888, or at the Office of the Federal Register, 800 North Capitol Street, NW., suite 700, Washington, DC.

(c) Compressed, liquefied breathing air shall meet the applicable minimum grade requirements for Type II liquid air set forth in the Compressed Gas Association Commodity Specification for Air, G–7.1, 1966 (Grade B or higher quality). G–7.1 is incorporated by reference and has been approved by the Director of the Federal Register in accordance with 5 U.S.C. 552(a) and 1 CFR part 51. Copies may be obtained from American National Standards Institute, Inc., 1430 Broadway, New York, NY 10018. Copies may be inspected at the NIOSH, Certification and Quality Assurance Branch, 1095 Willowdale Road, Morgantown, WV 26505–2888, or at the Office of the Federal Register, 800 North Capitol Street, NW., suite 700, Washington, DC.

§ 84.142 Air supply source; hand-operated or motor driven air blowers; Type A supplied-air respirators; minimum requirements.

(a) Blowers shall be designed and constructed to deliver an adequate amount of air to the wearer with either direction of rotation, unless constructed to permit rotation in one direction only, and to permit the free entrance of air to the hose when the blower is not operated.

(b) No multiple systems, whereby more than one user is supplied by one blower, will be approved, unless each hose line is connected directly to a manifold at the blower.

§ 84.143 Terminal fittings or chambers; Type B supplied-air respirators; minimum requirements.

(a) Blowers or connections to air supplies providing positive pressures shall not be approved for use on Type B supplied-air respirators.

(b) Terminal fittings or chambers employed in Type B supplied-air respirators, shall be:

(1) Installed in the inlet of the hose.

(2) Designed and constructed to provide for the drawing of air through corrosion resistant material arranged so as to be capable of removing material larger than 0.149 mm. in diameter (149 micrometers, 100-mesh, U.S. Standard sieve).

(3) Installed to provide a means for fastening or anchoring the fitting or chamber in a fixed position in a zone of respirable air.

§ 84.144 Hand-operated blower test; minimum requirements.

(a) Hand-operated blowers shall be tested by attaching them to a mechanical drive and operating them 6 to 8 hours daily for a period of 100 hours at a speed necessary to deliver 50 liters of air per minute through each completely assembled respirator. Each respirator shall be equipped with the maximum length of hose with which the device is to be approved and the hose shall be connected to each blower or manifold outlet designed for hose connections.

(b) The crank speed of the hand-operated blower shall not exceed 50 revolutions per minute in order to deliver the required 50 liters of air per minute to each facepiece.

(c) The power required to deliver 50 liters of air per minute to each wearer through the maximum length of hose shall not exceed one-fiftieth horsepower, and the torque shall not exceed a force of 2.3 kg. (5 pounds) on a 20 cm. (8-inch) crank, as defined in § 84.146.

(d) The blower shall operate throughout the period without failure or indication of excessive wear of bearings or other working parts.

§ 84.145 Motor-operated blower test; minimum requirements.

(a) Motor-operated blowers shall be tested by operating them at their specified running speed 6 to 8 hours daily for a period of 100 hours when assembled with the kind and maximum length of hose for which the device is to be approved and when connected to each blower or manifold outlet designed for hose connections.

(b) The connection between the motor and the blower shall be so constructed that the motor may be disengaged from the blower when the blower is operated by hand.

(c) The blower shall operate throughout the period without failure or indication of excessive wear of bearings or other working parts.

(d) Where a blower, which is ordinarily motor driven, is operated by hand, the power required to deliver 50 liters of air per minute to each wearer through the maximum length of hose shall not exceed one-fiftieth horsepower, and the torque shall not exceed a force of 2.3 kg. (5 pounds) on a 20 cm. (8-inch) crank, as defined in § 84.146.

(e) Where the respirator is assembled with the facepiece and 15 m. (50 feet) of the hose for which it is to be approved, and when connected to one outlet with all other outlets closed and operated at a speed not exceeding 50 revolutions of the crank per minute, the amount of air delivered into the respiratory-inlet covering shall not exceed 150 liters per minute.

§ 84.146 Method of measuring the power and torque required to operate blowers.

As shown in Figure 1 of this section, the blower crank is replaced by a wooden drum, a (13 cm. (5 inches) in diameter is convenient). This drum is wound with about 12 m. (40 feet) of No. 2 picture cord, b. A weight, c, of sufficient mass to rotate the blower at the desired speed is suspended from this wire cord. A mark is made on the cord about 3 to 4.5 m. (10 to 15 feet) from the weight, c. Another mark is placed at a measured distance (6–9 m./20–30 feet is convenient) from the first. These are used to facilitate timing. To determine the torque or horsepower required to operate the blower, the drum is started in rotation manually at or slightly above the speed at which the power measurement is to be made. The blower is then permitted to assume constant speed, and then as the first mark on the wire leaves the drum, a stopwatch is started. The watch is stopped when the second mark leaves the drum. From these data the foot-pounds per minute and the torque may be calculated.

BILLING CODE 4160–19–P

Figure 1—Apparatus for measuring power required to operate blower. (42 CFR part 84, subpart J, § 84.146)

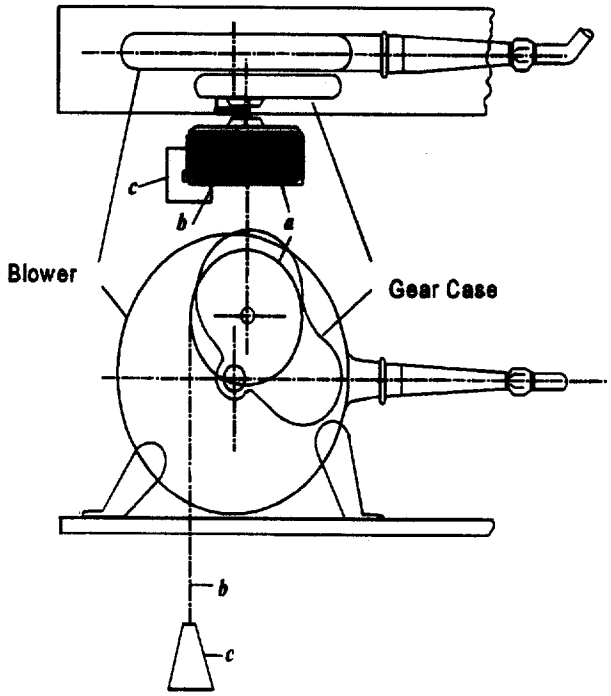

BILLING CODE 4160–19–C

§ 84.147 Type B supplied-air respirator; minimum requirements.

No Type B supplied-air respirator shall be approved for use with a blower or with connection to an air supply device at positive pressures.

§ 84.148 Type C supplied-air respirator, continuous flow class; minimum requirements.

(a) Respirators tested under this section shall be approved only when they supply respirable air at the pressures and quantities required.

(b) The pressure at the inlet of the hose connection shall not exceed 863 kN/m.^{2} (125 pounds per square inch gage).

(c) Where the pressure at any point in the supply system exceeds 863 kN/m.^{2} (125 pounds per square inch gage), the respirator shall be equipped with a pressure-release mechanism that will prevent the pressure at the hose connection from exceeding 863 kN/m.^{2} (125 pounds per square inch gage) under any conditions.

§ 84.149 Type C supplied-air respirator, demand and pressure demand class; minimum requirements.

(a) Respirators tested under this section shall be approved only when used to supply respirable air at the pressures and quantities required.

(b) The manufacturer shall specify the range of air pressure at the point of attachment of the air-supply hose to the air-supply system, and the range of hose length for the respirator. For example, he might specify that the respirator be used with compressed air at pressures ranging from 280–550 kN/m.^{2} (40 to 80 pounds per square inch) with from 6 to 76 m. (15 to 250 feet) of air-supply hose.

(c) The specified air pressure at the point of attachment of the hose to the air-supply system shall not exceed 863 kN/m.^{2} (125 pounds per square inch gage).

(d)(1) Where the pressure in the air-supply system exceeds 863 kN/m.^{2} (125 pounds per square inch gage), the respirator shall be equipped with a pressure-release mechanism that will prevent the pressure at the point of attachment of the hose to the air-supply system from exceeding 863 kN/m.^{2} (125 pounds per square inch gage).

(2) The pressure-release mechanism shall be set to operate at a pressure not more than 20 percent above the manufacturer's highest specified pressure. For example, if the highest specified pressure is 863 kN/m.^{2} (125 pounds per square inch), the pressure-release mechanism would be set to operate at a maximum of 1,035 kN/m.^{2} (150 pounds per square inch).

§ 84.150 Air-supply line tests; minimum requirements.

Air supply lines employed on Type A, Type B, and Type C supplied-air respirators shall meet the minimum test requirements set forth in Table 8 of this subpart.

§ 84.151 Harness test; minimum requirements.

(a)(1) Shoulder straps employed on Type A supplied-air respirators shall be tested for strength of material, joints, and seams and must separately withstand a pull of 113 kg. (250 pounds) for 30 minutes without failure.

(2) Belts, rings, and attachments for life lines must withstand a pull of 136 kg. (300 pounds) for 30 minutes without failure.

(3) The hose shall be firmly attached to the harness so as to withstand a pull of 113 kg. (250 pounds) for 30 minutes without separating, and the hose attachments shall be arranged so that the pull or drag of the hose behind an advancing wearer does not disarrange the harness or exert pull upon the facepiece.

(4) The arrangement and suitability of all harness accessories and fittings will be considered.

(b)(1) The harness employed on Type B supplied-air respirators shall not be uncomfortable, disturbing, or interfere with the movements of the wearer.

(2) The harness shall be easily adjustable to various sizes.

(3) The hose shall be attached to the harness in a manner that will withstand a pull of 45 kg. (100 pounds) for 30 minutes without separating or showing signs of failure.

(4) The design of the harness and attachment of the line shall permit dragging the maximum length of hose considered for approval over a concrete floor without disarranging the harness or exerting a pull on the facepiece.

(5) The arrangement and suitability of all harness accessories and fittings will be considered.

(c) The harness employed on Type C respirators shall be similar to that required on the Type B respirator, or, it may consist of a simple arrangement for attaching the hose to a part of the wearer's clothing in a practical manner that prevents a pull equivalent to dragging the maximum length of the hose over a concrete floor from exerting pull upon the respiratory-inlet covering.

(d) Where supplied-air respirators have a rigid or partly rigid head covering, a suitable harness shall be required to assist in holding this covering in place.

§ 84.152 Breathing tube test; minimum requirements.

(a)(1) Type A and Type B supplied-air respirators shall employ one or two flexible breathing tubes of the nonkinking type which extend from the facepiece to a connecting hose coupling attached to the belt or harness.

(2) The breathing tubes employed shall permit free head movement, insure against closing off by kinking or by chin or arm pressure, and they shall not create a pull that will loosen the facepiece or disturb the wearer.

(b) Breathing tubes employed on Type C supplied-air respirators of the continuous flow class shall meet the minimum requirements set forth in paragraph (a) of this section, however, an extension of the connecting hose may be employed in lieu of the breathing tubes required.

(c)(1) A flexible, nonkinking type breathing tube shall:

(i) Be employed on Type C supplied-air respirators of the demand and pressure-demand class; and

(ii) Extend from the facepiece to the demand or pressure-demand valve, except where the valve is attached directly to the facepiece.

(2) The breathing tube shall permit free head movement, insure against closing off by kinking or by chin or arm pressure, and shall not create a pull that will loosen the facepiece or disturb the wearer.

§ 84.153 Airflow resistance test, Type A and Type AE supplied-air respirators; minimum requirements.

(a) Airflow resistance will be determined when the respirator is completely assembled with the respiratory-inlet covering, the air-supply device, and the maximum length of air-supply hose coiled for one-half its length in loops 1.5 to 2.1 m. (5 to 7 feet) in diameter.

(b) The inhalation resistance, drawn at the rate of 85 liters (3 cubic feet) per minute when the blower is not operating or under any practical condition of blower operation shall not exceed the following amounts:

Maximum length of hose for which respirator is approved		Maximum resistance, water column height	
Feet	Meters	Inches	Millimeters
75	23	1.5	38
150	46	2.5	64
250	76	3.5	89
300	91	4.0	102

(c) The exhalation resistance shall not exceed 25 mm. (1 inch) of water-column height at a flow rate of 85 liters (3 cubic feet) per minute when the blower is not operating or under any practical condition of blower operation.

§ 84.154 Airflow resistance test; Type B and Type BE supplied-air respirators; minimum requirements.

(a) Airflow resistance shall be determined when the respirator is completely assembled with the respiratory-inlet covering and the hose in the maximum length to be considered for approval, coiled in loops 1.5 to 2.1 m. (5 to 7 feet) in diameter.

(b) Airflow resistance shall not exceed 38 mm. (1.5 inches) of water-column height to air drawn at the flow rate of 85 liters (3 cubic feet) per minute.

(c) The exhalation resistance shall not exceed 25 mm. (1 inch) of water-column height at this flow rate.

§ 84.155 Airflow resistance test; Type C supplied-air respirator, continuous flow class and Type CE supplied-air respirator; minimum requirements.

The resistance to air flowing from the respirator shall not exceed 25 mm. (1 inch) of water-column height when the air flow into the respiratory-inlet covering is 115 liters (4 cubic feet) per minute.

§ 84.156 Airflow resistance test; Type C supplied-air respirator, demand class; minimum requirements.

(a) Inhalation resistance shall not exceed 50 millimeters (2 inches) of water at an air flow of 115 liters (4 cubic feet) per minute.

(b) The exhalation resistance to a flow of air at a rate of 85 liters (3 cubic feet) per minute shall not exceed 25 millimeters (1 inch) of water.

§ 84.157 Airflow resistance test; Type C supplied-air respirator, pressure-demand class; minimum requirements.

(a) The static pressure in the facepiece shall not exceed 38 mm. (1.5 inches) of water-column height.

(b) The pressure in the facepiece shall not fall below atmospheric at inhalation airflows less than 115 liters (4 cubic feet) per minute.

(c) The exhalation resistance to a flow of air at a rate of 85 liters (3 cubic feet) per minute shall not exceed the static pressure in the facepiece by more than 51 mm. (2 inches) of water-column height.

§ 84.158 Exhalation valve leakage test.

(a) Dry exhalation valves and valve seats will be subjected to a suction of 25 mm. water-column height while in a normal operating position.

(b) Leakage between the valve and valve seat shall not exceed 30 milliliters per minute.

§ 84.159 Man tests for gases and vapors; supplied-air respirators; general performance requirements.

(a) Wearers will enter a chamber containing a gas or vapor as prescribed in §§ 84.160, 84.161, 84.162, and 84.163.

(b) Each wearer will spend 10 minutes in work to provide observations on freedom of the device from leakage. The freedom and comfort allowed the wearer will also be considered.

(c) Time during the test period will be divided as follows:

(1) *Five minutes.* Walking, turning head, dipping chin; and

(2) *Five minutes.* Pumping air with a tire pump into a 28-liter (1 cubic foot) container, or equivalent work.

(d) No odor of the test gas or vapor shall be detected by the wearer in the air breathed during any such test, and the wearer shall not be subjected to any undue discomfort or encumbrance because of the fit, air delivery, or other features of the respirator during the testing period.

§ 84.160 Man test for gases and vapors; Type A and Type AE respirators; test requirements.

(a) The completely assembled respirator will be worn in a chamber containing 0.1±0.025 percent isoamyl acetate vapor, and the blower, the intake of the hose, and not more than 25 percent of the hose length will be located in isoamyl acetate-free air.

(b) The man in the isoamyl acetate atmosphere will draw his inspired air through the hose, connections, and all parts of the air device by means of his lungs alone (blower not operating).

(c) The 10-minute work test will be repeated with the blower in operation at any practical speed up to 50 revolutions of the crank per minute.

§ 84.161 Man test for gases and vapors; Type B and Type BE respirators; test requirements.

(a) The completely assembled respirator will be worn in a chamber containing 0.1±0.025 percent isoamyl acetate vapor, and the intake of the hose, and not more than 25 percent of the hose length will be located in isoamyl acetate-free air.

(b) The man in the isoamyl acetate atmosphere will draw his inspired air through the hose and connections by means of his lungs alone.

§ 84.162 Man test for gases and vapors; Type C respirators, continuous-flow class and Type CE supplied-air respirators; test requirements.

(a) The completely assembled respirator will be worn in a chamber containing 0.1±0.025 percent isoamyl acetate vapor, the intake of the hose will be connected to a suitable source of respirable air, and not more than 25 percent of the hose length will be located in isoamyl acetate-free air.

(b) The minimum flow of air required to maintain a positive pressure in the respiratory-inlet covering throughout the entire breathing cycle will be supplied to the wearer, provided however, that airflow shall not be less than 115 liters per minute for tight-fitting and not less than 170 liters per minute for loose-fitting respiratory inlet-coverings.

(c) The test will be repeated with the maximum rate of flow attainable within specified operating pressures.

§ 84.163 Man test for gases and vapors; Type C supplied-air respirators, demand and pressure-demand classes; test requirements.

(a) The completely assembled respirator will be worn in a chamber containing 0.1±0.025 percent isoamyl acetate vapor, the intake of the hose will be connected to a suitable source of respirable air, and not more than 25 percent of the hose length will be located in isoamyl acetate-free air.

(b) The test will be conducted at the minimum pressure with the maximum hose length and will be repeated at the maximum pressure with the minimum hose length.

Tables to Subpart J of Part 84

TABLE 8—AIR-SUPPLY-LINE REQUIREMENTS AND TESTS

[42 CFR part 84, subpart J]

Specific requirements	Requirements for the air-supply lines of the indicated type of supplied-air respirators		
	Type A	Type B	Type C
Length of hose	Maximum of 91 m. (300 feet), in multiples of 7.6 m. (25 feet).	Maximum of 23 m. (75 feet) in multiples of 7.6 m. (25 feet).	Maximum of 91 m. (300 feet) in multiples of 7.6 m. (25 feet). It will be permissible for the applicant to supply hose of the approved type of shorter length than 7.6 m. (25 feet) provided it meets the requirements of the part.
Air flow	None	None	The air-supply hose with air regulating valve or orifice shall permit a flow of not less than 115 liters (4 cubic feet) per minute to tight-fitting and 170 liters (6 cubic feet) per minute to loose-fitting respiratory-inlet coverings through the maximum length of hose for which approval is granted and at the minimum specified air-supply pressure. The maximum flow shall not exceed 425 liters (15 cubic feet) per minute at the maximum specified air-supply pressure with the minimum length of hose for which approval is granted.

TABLE 8—AIR-SUPPLY-LINE REQUIREMENTS AND TESTS—Continued

[42 CFR part 84, subpart J]

Specific requirements	Requirements for the air-supply lines of the indicated type of supplied-air respirators		
	Type A	Type B	Type C
Air flow	.....do	.....do	The air-supply hose, detachable coupling, and demand valve of the demand class or pressure-demand valve of the pressure-demand class for Type C supplied-air respirators, demand and pressure-demand classes, shall be capable of delivering respirable air at a rate of not less than 115 liters (4 cubic feet) per minute to the respiratory-inlet covering at an inhalation resistance not exceeding 50 millimeters (2 inches) of water-column height measured in the respiratory-inlet covering with any combination of air-supply pressure and length of hose within the applicant's specified range of pressure and hose length. The air-flow rate and resistance to inhalation shall be measured while the demand or pressure-demand valve is actuated 20 times per minute by a source of intermittent suction. The maximum rate of flow to the respiratory-inlet covering shall not exceed 425 liters (15 cubic feet) per minute under the specified operating conditions.
Air-regulating valve	.....do	.....do	If an air-regulating valve is provided, it shall be so designed that it will remain at a specific adjustment, which will not be affected by the ordinary movement of the wearer. The valve must be so constructed that the air supply with the maximum length of hose and at the minimum specified air-supply pressure will not be less than 115 liters (4 cubic feet) of air per minute to tight-fitting and 170 liters (6 cubic feet) of air per minute of loose-fitting respiratory inlet coverings for any adjustment of the valve. If a demand or pressure-demand valve replaces the air-regulating valve, it shall be connected to the air-supply at the maximum air pressure for which approval is sought by means of the minimum length of air-supply hose for which approval is sought. The outlet of the demand or pressure-demand valve shall be connected to a source of intermittent suction so that the demand or pressure-demand valve is actuated approximately 20 times per minute for a total of 100,000 inhalations. To expedite this test, the rate of actuation may be increased if mutually agreeable to the applicant and NIOSH. During this test the valve shall function without failure and without excessive wear of the moving parts. The demand or pressure-demand valve shall not be damaged in any way when subjected at the outlet to a pressure or suction of 25 cm. (10 inches) of water gage for 2 minutes.
Noncollapsibility	The hose shall not collapse or exhibit permanent deformation when a force of 90 kg. (200 pounds) is applied for 5 minutes between 2 planes 7.6 cm. (3 inches) wide on opposite sides of the hose.	Same as Type A	None.

TABLE 8—AIR-SUPPLY-LINE REQUIREMENTS AND TESTS—Continued

[42 CFR part 84, subpart J]

Specific requirements	Requirements for the air-supply lines of the indicated type of supplied-air respirators		
	Type A	Type B	Type C
Nonkinkability	None	None	A 7.6 m. (25 foot) section of the hose will be placed on a horizontal-plane surface and shaped into a one-loop coil with one end of the hose connected to an airflow meter and the other end of the hose supplied with air at the minimum specified supply pressure. The connection shall be in the plane of the loop. The other end of the hose will be pulled tangentially to the loop and in the plane of the loop until the hose straightens. To meet the requirements of this test the loop shall maintain a uniform near-circular shape and ultimately unfold as a spiral, without any localized deformation that decreases the flow of air to less than 90 percent of the flow when the hose is tested while remaining in a straight line.
Strength of hose and couplings.	Hose and couplings shall not separate or fail when tested with a pull of 113 kg. (250 pounds) for 5 minutes.	Same as Type A	Hose and couplings shall not exhibit any separation or failure when tested with a pull of 45 kg. (100 pounds) for 5 minutes and when tested by subjecting them to an internal air pressure of 2 times the maximum respirator-supply pressure that is specified by the applicant or at 173 kN/m. 2 (25 pounds per square inch) gage, whichever is higher.
Tightness	No air leakage shall occur when the hose and couplings are joined and the joint(s) are immersed in water and subjected to an internal air pressure of 35 kN/m. 2 (5 pounds per square inch) gage.	None	Leakage of air exceeding 50 cc. per minute at each coupling shall not be permitted when the hose and couplings are joined and are immersed in water, with air flowing through the respirator under a pressure of 173 kN/m. 2 (25 pounds per square inch) gage applied to the inlet end of the air-supply hose, or at twice the maximum respirator-supply pressure that is specified by the applicant, whichever is higher.
Permeation of hose by gasoline.	The permeation of the hose by gasoline will be tested by immersing 7.6 m. (25 feet) of hose and one coupling in gasoline, with air flowing through the hose at the rate of 8 liters per minute for 6 hours. The air from the hose shall not contain more than 0.01 percent by volume of gasoline vapor at the end of the test.	Same as for Type A	Same as for Type A, except the test period shall be 1 hour.
Detachable coupling	None	None	A hand-operated detachable coupling by which the wearer can readily attach or detach the connecting hose shall be provided at a convenient location. This coupling shall be durable, remain connected under all conditions of normal respirator use, and meet the prescribed tests for strength and tightness of hose and couplings.

Subpart K—Non-Powered Air-Purifying Particulate Respirators

§ 84.170 Non-powered air-purifying particulate respirators; description.

(a) Non-powered air-purifying particulate respirators utilize the wearer's negative inhalation pressure to draw the ambient air through the air-purifying filter elements (filters) to remove particulates from the ambient air. They are designed for use as respiratory protection against atmospheres with particulate contaminants (e.g., dusts, fumes, mists) that are not immediately dangerous to life or health and that contain adequate oxygen to support life.

(b) Non-powered air-purifying particulate respirators are classified into three series, N-, R-, and P-series. The N-series filters are restricted to use in those workplaces free of oil aerosols. The R- and P-series filters are intended for removal of any particulate that includes oil-based liquid particulates.

(c) Non-powered air-purifying particulate respirators are classified according to the efficiency level of the filter(s) as tested according to the requirements of this part.

(1) N100, R100, and P100 filters shall demonstrate a minimum efficiency level of 99.97 percent.

(2) N99, R99, and P99 filters shall demonstrate a minimum efficiency level of 99 percent.

(3) N95, R95, and P95 filters shall demonstrate a minimum efficiency level of 95 percent.

§ 84.171 Non-powered air-purifying particulate respirators; required components.

(a) Each non-powered air-purifying particulate respirator described in § 84.170 shall, where its design requires, contain the following component parts:

(1) Facepiece, mouthpiece with noseclip, hood, or helmet;

(2) Filter unit;

(3) Harness;

(4) Attached blower; and

(5) Breathing tube.

(b) The components of each non-powered air-purifying particulate respirator shall meet the minimum construction requirements set forth in subpart G of this part.

§ 84.172 Breathing tubes; minimum requirements.

Flexible breathing tubes used in conjunction with respirators shall be designed and constructed to prevent:

(a) Restriction of free head movement;

(b) Disturbance of the fit of facepieces, mouthpieces, hoods, or helmets;

(c) Interference with the wearer's activities; and

(d) Shutoff of airflow due to kinking, or from chin or arm pressure.

§ 84.173 Harnesses; installation and construction; minimum requirements.

(a) Each respirator shall, where necessary, be equipped with a suitable harness designed and constructed to hold the components of the respirator in position against the wearer's body.

(b) Harnesses shall be designed and constructed to permit easy removal and replacement of respirator parts, and, where applicable, provide for holding a full facepiece in the ready position when not in use.

§ 84.174 Respirator containers; minimum requirements.

(a) Except as provided in paragraph (b) of this section each respirator shall be equipped with a substantial, durable container bearing markings which show the applicant's name, the type of respirator it contains, and all appropriate approval labels.

(b) Containers for single-use respirators may provide for storage of more than one respirator, however, such containers shall be designed and constructed to prevent contamination of respirators which are not removed, and to prevent damage to respirators during transit.

§ 84.175 Half-mask facepieces, full facepieces, hoods, helmets, and mouthpieces; fit; minimum requirements.

(a) Half-mask facepieces and full facepieces shall be designed and constructed to fit persons with various facial shapes and sizes either:

(1) By providing more than one facepiece size; or

(2) By providing one facepiece size which will fit varying facial shapes and sizes.

(b) Full facepieces shall provide for optional use of corrective spectacles or lenses, which shall not reduce the respiratory protective qualities of the respirator.

(c) Hoods and helmets shall be designed and constructed to fit persons with various head sizes, provide for the optional use of corrective spectacles or lenses, and insure against any restriction of movement by the wearer.

(d) Mouthpieces shall be equipped with noseclips which are securely attached to the mouthpiece or respirator and provide an airtight seal.

(e) Facepieces, hoods, and helmets shall be designed to prevent eyepiece fogging.

(f) Half-mask facepieces shall not interfere with the fit of common industrial safety corrective spectacles.

§ 84.176 Facepieces, hoods, and helmets; eyepieces; minimum requirements.

Facepieces, hoods, and helmets shall be designed and constructed to provide adequate vision which is not distorted by the eyepieces.

§ 84.177 Inhalation and exhalation valves; minimum requirements.

(a) Inhalation and exhalation valves shall be protected against distortion.

(b) Inhalation valves shall be designed and constructed and provided where necessary to prevent excessive exhaled air from adversely affecting filters, except where filters are specifically designed to resist moisture.

(c) Exhalation valves shall be:

(1) Provided where necessary;

(2) Protected against damage and external influence; and

(3) Designed and constructed to prevent inward leakage of contaminated air.

§ 84.178 Head harnesses; minimum requirements.

(a) All facepieces shall be equipped with head harnesses designed and constructed to provide adequate tension during use and an even distribution of pressure over the entire area in contact with the face.

(b) Facepiece head harnesses, except those employed on single-use respirators, shall be adjustable and replaceable.

(c) Mouthpieces shall be equipped, where applicable, with adjustable and replaceable harnesses, designed and constructed to hold the mouthpiece in place.

§ 84.179 Non-powered air-purifying particulate respirators; filter identification.

(a) The respirator manufacturer, as part of the application for certification, shall specify the filter series and the filter efficiency level (i.e., ''N95'', ''R95, ''P95'', ''N99, ''R99'', ''P99'', ''N100'', ''R100'', or ''P100'') for which certification is being sought.

(b) Filters shall be prominently labeled as follows:

(1) N100 filters shall be labeled ''N100 Particulate Filter (99.97% filter efficiency level)'' and shall be a color other than magenta.

(2) R100 filters shall be labeled ''R100 Particulate Filter (99.97% filter efficiency level)'' and shall be a color other than magenta.

(3) P100 filters shall be labeled ''P100 Particulate Filter (99.97% filter efficiency level)'' and shall be color coded magenta.

(4) N99 filters shall be labeled ''N99 Particulate Filter (99% filter efficiency level)'' and shall be a color other than magenta.

(5) R99 filters shall be labeled ''R99 Particulate Filter (99% filter efficiency level)'' and shall be a color other than magenta.

(6) P99 filters shall be labeled ''P99 Particulate Filter (99% filter efficiency level)'' and shall be a color other than magenta.

(7) N95 filters shall be labeled as ''N95 Particulate Filter (95% filter efficiency level)'' and shall be a color other than magenta.

(8) R95 filters shall be labeled as ''R95 Particulate Filter (95% filter efficiency level)'' and shall be a color other than magenta.

(9) P95 filters shall be labeled as ''P95 Particulate Filter (95% filter efficiency level)'' and shall be a color other than magenta.

§ 84.180 Airflow resistance tests.

(a) Resistance to airflow will be measured in the facepiece, mouthpiece, hood, or helmet of a particulate respirator (complete respirator) mounted on a test fixture with air flowing at continuous rate of 85±2 liters per minute, before each test conducted in accordance with § 84.182.

(b) The resistances for particulate respirators upon initial inhalation shall not exceed 35 mm water column height pressure and upon initial exhalation shall not exceed 25 mm water column height pressure.

§ 84.181 Non-powered air-purifying particulate filter efficiency level determination.

(a) Twenty filters of each non-powered air-purifying particulate respirator model shall be tested for filter efficiency against:

(1) A solid sodium chloride particulate aerosol as per this section, if N-series certification is requested by the applicant.

(2) A dioctyl phthalate or equivalent liquid particulate aerosol as per this section, if R-series or P-series certification is requested by the applicant.

(b) Filters including holders and gaskets; when separable, shall be tested for filter efficiency level, as mounted on a test fixture in the manner as used on the respirator.

(c) Prior to filter efficiency testing of 20 N-series filters, the 20 to be tested shall be taken out of their packaging and placed in an environment of 85±5 percent relative humidity at 38±2.5 °C for 25±1 hours. Following the pre-conditioning, filters shall be sealed in a gas-tight container and tested within 10 hours.

(d) When the filters do not have separable holders and gaskets, the exhalation valves shall be blocked so as to ensure that leakage, if present, is not included in the filter efficiency level evaluation.

(e) For non-powered air-purifying particulate respirators with a single filter, filters shall be tested at a continuous airflow rate of 85±4 liters per minute. Where filters are to be used in pairs, the test-aerosol airflow rate shall be 42.5±2 liters per minute through each filter.

(f) Filter efficiency test aerosols.

(1) When testing N-series filters, a sodium chloride or equivalent solid aerosol at 25±5 °C and relative humidity of 30±10 percent that has been neutralized to the Boltzmann equilibrium state shall be used. Each filter shall be challenged with a concentration not exceeding 200 mg/m^3.

(2) When testing R-series and P-series filters, a neat cold-nebulized dioctyl phthalate (DOP) or equivalent aerosol at 25±5 °C that has been neutralized to the Boltzmann equilibrium state shall be used. Each filter shall be challenged with a concentration not exceeding 200 mg/m^3.

(3) The test shall continue until minimum efficiency is achieved or until an aerosol mass of at least 200±5 mg has contacted the filter. For P-series filters, if the filter efficiency is decreasing when the 200±5 mg challenge point is reached, the test shall be continued until there is no further decrease in efficiency.

(g) The sodium chloride test aerosol shall have a particle size distribution with count median diameter of 0.075±0.020 micrometer and a standard geometric deviation not exceeding 1.86 at the specified test conditions as determined with a scanning mobility particle sizer or equivalent. The DOP aerosol shall have a particle size distribution with count median diameter of 0.185±0.020 micrometer and a standard geometric deviation not exceeding 1.60 at the specified test conditions as determined with a scanning mobility particle sizer or equivalent.

(h) The efficiency of the filter shall be monitored and recorded throughout the test period by a suitable forward-light-scattering photometer or equivalent instrumentation.

(i) The minimum efficiency for each of the 20 filters shall be determined and recorded and be equal to or greater than the filter efficiency criterion listed for each level as follows:

P100, R100 and N100: Efficiency ≥99.97%
P99, R99 and N99: Efficiency ≥99%
P95, R95 and N95: Efficiency ≥95%

§ 84.182 Exhalation valve leakage test; minimum requirements.

(a) Dry exhalation valves and valve seats will be subjected to a suction of 25 mm. water-column height while in a normal operating position.

(b) Leakage between the valve and valve seat shall not exceed 30 milliliters per minute.

Subpart L—Chemical Cartridge Respirators

§ 84.190 Chemical cartridge respirators: description.

(a) Chemical cartridge respirators including all completely assembled respirators which are designed for use as respiratory protection during entry into or escape from atmospheres not immediately dangerous to life and health, are described according to the specific gases or vapors against which they are designed to provide respiratory protection, as follows:

Type of chemical cartridge respirator [1]	Maximum use concentration, parts per million
Ammonia	300
Chlorine	10
Hydrogen chloride	50
Methyl amine	100
Organic vapor	[2] 1,000
Sulfur dioxide	50
Vinyl chloride	10

[1] Not for use against gases or vapors with poor warning properties (except where MSHA or Occupational Safety and Health Administration standards may permit such use for a specific gas or vapor) or those which generate high heats of reaction with sorbent material in the cartridge.

[2] Maximum use concentrations are lower for organic vapors which produce atmospheres immediately hazardous to life or health at concentrations equal to or lower than this concentration.

(b) Chemical cartridge respirators for respiratory protection against gases or vapors, which are not specifically listed with their maximum use concentration, may be approved if the applicant submits a request for such approval, in writing, to the Institute. The Institute shall consider each such application and accept or reject the application after a review of the effects on the wearer's health and safety and in the light of any field experience in use of chemical cartridge respirators as protection against such hazards.

§ 84.191 Chemical cartridge respirators; required components.

(a) Each chemical cartridge respirator described in § 84.190 shall, where its design requires, contain the following component parts:

(1) Facepiece, mouthpiece, and noseclip, hood, or helmet;
(2) Cartridge;
(3) Cartridge with filter;
(4) Harness;
(5) Breathing tube; and
(6) Attached blower.

(b) The components of each chemical cartridge respirator shall meet the minimum construction requirements set forth in subpart G of this part.

§ 84.192 Cartridges in parallel; resistance requirements.

Where two or more cartridges are used in parallel, their resistance to airflow shall be essentially equal.

§ 84.193 Cartridges; color and markings; requirements.

The color and markings of all cartridges or labels shall conform with the requirements of the American National Standards Institute, American National Standard for Identification of Air-Purifying Respirator Canisters and Cartridges, ANSI K13.1–1973. ANSI K13.1 is incorporated by reference and has been approved by the Director of the Federal Register in accordance with 5 U.S.C. 552(a) and 1 CFR part 51. Copies may be obtained from American

National Standards Institute, Inc., 1430 Broadway, New York, NY 10018. Copies may be inspected at the NIOSH, Certification and Quality Assurance Branch, 1095 Willowdale Road, Morgantown, WV 26505–2888, or at the Office of the Federal Register, 800 North Capitol Street, NW., suite 700, Washington, DC.

§ 84.194 Filters used with chemical cartridges; location; replacement.

(a) Particulate matter filters used in conjunction with a chemical cartridge shall be located on the inlet side of the cartridge.

(b) Filters shall be incorporated in or firmly attached to the cartridge and each filter assembly shall, where applicable, be designed to permit its easy removal from and replacement on the cartridge.

§ 84.195 Breathing tubes; minimum requirements.

Flexible breathing tubes used in conjunction with respirators shall be designed and constructed to prevent:

(a) Restriction of free head movement;

(b) Disturbance of the fit of facepieces, mouthpieces, hoods, or helmets;

(c) Interference with the wearer's activities; and

(d) Shutoff of airflow due to kinking, or from chin or arm pressure.

§ 84.196 Harnesses; installation and construction; minimum requirements.

(a) Each respirator shall, where necessary, be equipped with a suitable harness designed and constructed to hold the components of the respirator in position against the wearer's body.

(b) Harnesses shall be designed and constructed to permit easy removal and replacement of respirator parts and, where applicable, provide for holding a full facepiece in the ready position when not in use.

§ 84.197 Respirator containers; minimum requirements.

Respirators shall be equipped with a substantial, durable container bearing markings which show the applicant's name, the type and commercial designation of the respirator it contains and all appropriate approval labels.

§ 84.198 Half-mask facepieces, full facepieces, mouthpieces, hoods, and helmets; fit; minimum requirements.

(a) Half-mask facepieces and full facepieces shall be designed and constructed to fit persons with various facial shapes and sizes either:

(1) By providing more than one facepiece size; or

(2) By providing one facepiece size which will fit varying facial shapes and sizes.

(b) Hoods and helmets shall be designed and constructed to fit persons with various head sizes, provide for the optional use of corrective spectacles or lenses, and insure against any restriction of movement by the wearer.

(c) Mouthpieces shall be equipped with noseclips which are securely attached to the mouthpiece or respirator and provide an airtight fit.

(d) Full facepieces shall provide for optional use of corrective spectacles or lenses which shall not reduce the respiratory protective qualities of the respirator.

(e) Facepieces, hoods, and helmets shall be designed to prevent eyepiece fogging.

§ 84.199 Facepieces, hoods, and helmets; eyepieces; minimum requirements.

Facepieces, hoods, and helmets shall be designed and constructed to provide adequate vision which is not distorted by the eyepieces.

§ 84.200 Inhalation and exhalation valves; minimum requirements.

(a) Inhalation and exhalation valves shall be provided where necessary and protected against distortion.

(b) Inhalation valves shall be designed and constructed to prevent excessive exhaled air from entering cartridges or adversely affecting canisters.

(c) Exhalation valves shall be—

(1) Protected against damage and external influence; and

(2) Designed and constructed to prevent inward leakage of contaminated air.

§ 84.201 Head harnesses; minimum requirements.

(a) (1) Facepieces for chemical cartridge respirators other than single-use vinyl chloride shall be equipped with adjustable and replaceable head harnesses designed and constructed to provide adequate tension during use and an even distribution of pressure over the entire area in contact with the face.

(2) Facepieces for single-use vinyl chloride respirators shall be equipped with adjustable head harnesses designed and constructed to provide adequate tension during use and an even distribution of pressure over the entire area in contact with the face.

(b) Mouthpieces shall be equipped where applicable, with an adjustable and replaceable harness designed and constructed to hold the mouthpiece in place.

§ 84.202 Air velocity and noise levels; hoods and helmets; minimum requirements.

Noise levels generated by the respirator will be measured inside the hood or helmet at maximum airflow obtainable and shall not exceed 80 dBA.

§ 84.203 Breathing resistance test; minimum requirements.

(a) Resistance to airflow will be measured in the facepiece, mouthpiece, hood, or helmet of a chemical cartridge respirator mounted on a test fixture with air flowing at a continuous rate of 85 liters per minute, both before and after each test conducted in accordance with §§ 84.206 through 84.207.

(b) The maximum allowable resistance requirements for chemical cartridge respirators are as follows:

MAXIMUM RESISTANCE

[Millimeter water column height]

Type of chemical-cartridge respirator	Inhalation		Exhalation
	Initial	Final[1]	
Other than single-use vinyl chloride respirators:			
For gases, vapors, or gases and vapors	40	45	20
For gases, vapors, or gases and vapors, and particulates	50	70	20
Single-use respirator with valves:			
For vinyl chloride	20	25	20
For vinyl chloride and particulates	30	45	2
Single-use respirator without valves:			
For vinyl chloride	15	20	([2])
For vinyl chloride and particulates	25	40	([2])

[1] Measured at end of service life specified in Table 11 of this subpart.

[2] Same as inhalation.

§ 84.204 Exhalation valve leakage test; minimum requirements.

(a) Dry exhalation valves and valve seats will be subjected to a suction of 25 mm. water-column height while in a normal operating position.

(b) Leakage between the valve and valve seat shall not exceed 30 milliliters per minute.

§ 84.205 Facepiece test; minimum requirements.

(a) The complete chemical cartridge respirator will be fitted to the faces of persons having varying facial shapes and sizes.

(b) Where the applicant specifies a facepiece size or sizes for the respirator together with the approximate measurement of faces they are designed to fit, the Institute will provide test subjects to suit such facial measurements.

(c) Any chemical cartridge respirator part which must be removed to perform the facepiece or mouthpiece fit test shall be replaceable without special tools and without disturbing facepiece or mouthpiece fit.

(d) The facepiece or mouthpiece fit test using the positive or negative pressure recommended by the applicant and described in his instructions will be used before each test.

(e) (1) Each wearer will enter a chamber containing 100 p.p.m. isoamyl acetate vapor for half-mask facepieces, and 1,000 p.p.m. for full facepieces, mouthpieces, hoods, and helmets.

(2) The facepiece or mouthpiece may be adjusted, if necessary, in the test chamber before starting the test.

(3) Each wearer will remain in the chamber for 8 minutes while performing the following activities:

(i) Two minutes, nodding and turning head;

(ii) Two minutes, calisthenic arm movements;

(iii) Two minutes, running in place; and

(iv) Two minutes, pumping with a tire pump into a 28-liter (1 cubic-foot) container.

(4) Each wearer shall not detect the odor of isoamyl-acetate vapor during the test.

§ 84.206 Particulate tests; respirators with filters; minimum requirements; general.

(a) Three respirators with cartridges containing, or having attached to them, filters for protection against particulates will be tested in accordance with the provisions of § 84.207.

(b) In addition to the test requirements set forth in paragraph (a) of this section, three such respirators will be tested, as appropriate, in accordance with the provisions of §§ 84.179 through 84.183; however, the maximum allowable resistance of complete particulate, and gas, vapor, or gas and vapor chemical cartridge respirators shall not exceed the maximum allowable limits set forth in § 84.203.

§ 84.207 Bench tests; gas and vapor tests; minimum requirements; general.

(a) Bench tests will be made on an apparatus that allows the test atmosphere at 50±5 percent relative humidity and room temperature, approximately 25 °C, to enter the cartridges continuously at predetermined concentrations and rates of flow, and that has means for determining the test life of the cartridges.

(b) Where two cartridges are used in parallel on a chemical cartridge respirator, the bench test will be performed with the cartridges arranged in parallel, and the test requirements will apply to the combination rather than to the individual cartridges.

(c) Three cartridges or pairs of cartridges will be removed from containers and tested as received from the applicant.

(d) Two air purifying cartridges or pairs of cartridges will be equilibrated at room temperature by passing 25 percent relative humidity air through them at the flow rate of 25 liters per minute (l.p.m.) for 6 hours.

(e) Two air purifying cartridges or pairs of cartridges will be equilibrated by passing 85 percent relative humidity air through them at the flow rate of 25 l.p.m.

(f) All cartridges will be resealed, kept in an upright position, at room temperatures, and tested within 18 hours.

(g) Cartridges will be tested and shall meet the minimum requirements set forth in Table 11 of this subpart.

Tables to Subpart L of Part 84

TABLES 9 AND 10 [RESERVED]

TABLE 11–CARTRIDGE BENCH TESTS AND REQUIREMENTS

[42 CFR part 84, subpart L]

Cartridge	Test condition	Test atmosphere		Flowrate (l.p.m.)	Number of tests	Penetration [1] (p.p.m.)	Minimum life [2] (min.)
		Gas or vapor	Concentration (p.p.m.)				
Ammonia	As received	NH_3	1000	64	3	50	50
Ammonia	Equilibrated	NH_3	1000	32	4	50	50
Chlorine	As received	Cl_2	500	64	3	5	35
Chlorine	Equilibrated	Cl_2	500	32	4	5	35
Hydrogen chloride	As received	HCl	500	64	3	5	50
Hydrogen chloride	Equilibrated	HCl	500	32	4	5	50
Methylamine	As received	CH_3NH_2	1000	64	3	10	25
Methylamine	Equilibrated	CH_3NH_2	1000	32	4	10	25
Organic vapors	As received	CCl_4	1000	64	3	5	50
Organic vapors	Equilibrated	CCl_4	1000	32	4	5	50
Sulfur dioxide	As received	SO_2	500	64	3	5	30
Sulfur dioxide	Equilibrated	SO_2	500	32	4	5	30

[1] Minimum life will be determined at the indicated penetration.

[2] Where a respirator is designed for respiratory protection against more than one type of gas or vapor, as for use in ammonia and in chlorine, the minimum life shall be one-half that shown for each type of gas or vapor. Where a respirator is designed for respiratory protection against more than one gas of a type, as for use in chlorine and sulfur dioxide, the stated minimal life shall apply.

Subpart M—[Reserved]

Subpart N—Special Use Respirators

§ 84.250 Vinyl chloride respirators; description.

Vinyl chloride respirators, including all completely assembled respirators which are designed for use as respiratory protection during entry into and escape from vinyl chloride atmospheres containing adequate oxygen to support life, are described according to their construction as follows:

(a) Front-mounted or back-mounted gas masks;

(b) Chin-style gas masks;

(c) Chemical-cartridge respirators;

(d) Powered air-purifying respirators; and

(e) Other devices, including combination respirators.

§ 84.251 Required components.

(a) Each vinyl chloride respirator described in § 84.250 shall, where its design requires, contain the following component parts:

(1) Facepiece;

(2) Canister with end-of-service-life indicator;

(3) Cartridge with end-of-service-life indicator;

(4) Harness;

(5) Attached blower; and

(6) Breathing tube.

(b) The components of each vinyl chloride respirator shall meet the minimum construction requirements set forth in Subpart G of this part.

§ 84.252 Gas masks; requirements and tests.

(a) Except for the tests prescribed in § 84.126, the minimum requirements and performance tests for gas masks, prescribed in Subpart I of this part, are applicable to vinyl chloride gas masks.

(b) The following bench tests are applicable to canisters designed for use with gas masks for entry into and escape from vinyl chloride atmospheres containing adequate oxygen to support life:

(1) Four canisters will be equilibrated at 25±5 °C by passing 85±5 percent relative humidity air through them at 64 liters per minute for six hours.

(2) The equilibrated canisters will be resealed, kept in an upright position at room temperature, and tested according to paragraph (b)(3) of this section within 18 hours.

(3) The canisters equilibrated and stored as described in paragraphs (b) (1) and (2) of this section will be tested on an apparatus that allows the test atmosphere at 85±5 percent relative humidity and 25±5 °C to enter the canister continuously at a concentration of 25 ppm vinyl chloride monomer at a total flow rate of 64 liters per minute.

(4) The maximum allowable penetration after six hours of testing according to paragraph (b)(3) of this section shall not exceed 1 ppm vinyl chloride.

(c) Where canisters are submitted for testing and approval with a service life of more than four hours, the period of time for testing for vinyl chloride penetration will be performed at 150% of the service life specified in the manufacturer's application. (Example: If a manufacturer requests approval of a respirator for six hours use against exposure to vinyl chloride, the maximum allowable penetration after nine hours of testing shall not exceed 1 ppm vinyl chloride.)

§ 84.253 Chemical-cartridge respirators; requirements and tests.

(a) Except for the tests prescribed in §§ 84.206 and 84.207, the minimum requirements and performance tests for chemical-cartridge respirators prescribed in Subpart L of this part are applicable to replaceable-cartridge and single-use vinyl chloride chemical-cartridge respirators.

(b) The following bench tests are applicable to cartridges designed for use with chemical-cartridge respirators for entry into and escape from vinyl chloride atmospheres containing adequate oxygen to support life:

(1) Where two cartridges are used in parallel on a chemical-cartridge respirator, the bench test requirements will apply to the combination rather than the individual cartridges.

(2) Four cartridges or pairs of cartridges will be equilibrated at 25±5 °C by passing 85±5 percent relative humidity air through them at 25 liters per minute for six hours.

(3) The equilibrated cartridges will be resealed, kept in an upright position, at room temperature, and tested according to paragraphs (b)(4) and (b)(5) of this section for other than single-use respirators or according to paragraphs (b)(6) and (b)(7) of this section for single-use respirators within 18 hours.

(4) The cartridges or pairs of cartridges for other than single-use respirators, equilibrated and stored as described in paragraphs (b)(1), (b)(2), and (b)(3) of this section, will be tested on an apparatus that allows the test atmosphere at 85±5 percent relative humidity and 25±5 °C, to enter the cartridges or pairs of cartridges continuously at a concentration of 10 ppm vinyl chloride monomer at a total flowrate of 64 liters per minute.

(5) The maximum allowable penetration after 90 minutes testing of cartridges or pairs of cartridges for other than single-use respirators, according to paragraph (b)(4) of this section shall not exceed 1 ppm vinyl chloride.

(6) The single-use respirators, equilibrated and stored as described in paragraphs (b)(2) and (b)(3) of this section, will be tested on an apparatus that allows a test atmosphere at 85±5 percent relative humidity and 25±5 °C to be cycled through the respirator by a breathing machine at a concentration of 10 ppm vinyl chloride monomer at the rate of 24 respirations per minute at a minute volume of 40±0.6 liters. Air exhaled through the respirator will be 35±2 °C with 94±3 percent relative humidity.

(7) The maximum allowable penetration after 144 minutes testing of respirators, according to paragraph (b)(6) of this section, shall not exceed 1 ppm vinyl chloride.

§ 84.254 Powered air-purifying respirators; requirements and tests.

(a) Except for the tests prescribed in § 84.207, the minimum requirements and performance tests for powered air-purifying respirators prescribed in subpart L of this part are applicable to vinyl chloride powered air-purifying respirators.

(b) The following bench tests are applicable to cartridges designed for use with powered air-purifying respirators for entry into and escape from vinyl chloride atmospheres containing adequate oxygen to support life:

(1) Four cartridges will be equilibrated at 25± °C by passing 85±5 percent relative humidity air through them at 115 liters per minute for tight-fitting facepieces and 170 liters per minute for loose-fitting hoods and helmets, for six hours.

(2) The equilibrated cartridges will be resealed, kept in an upright position at room temperature and tested according to paragraph (b)(3) of this section within 18 hours.

(3) The cartridges equilibrated and stored as described in paragraphs (b) (1) and (2) of this section will be tested on an apparatus that allows the test atmosphere at 85±5 percent relative

humidity and 25±5 °C to enter the cartridge continuously at a concentration of 25 ppm vinyl chloride monomer at a total flow rate of 115 liters per minute for tight-fitting facepieces and 170 liters per minute for loose-fitting hoods and helmets.

(4) The maximum allowable penetration after six hours of testing according to paragraph (b)(3) of this section shall not exceed 1 ppm vinyl chloride.

§ 84.255 Requirements for end-of-service-life indicator.

(a) Each canister or cartridge submitted for testing and approval in accordance with §§ 84.252, 84.253, and 84.254 shall be equipped with a canister or cartridge end-of-service-life indicator which shows a satisfactory indicator change or other obvious warning before 1 ppm vinyl chloride penetration occurs. The indicator shall show such change or afford such warning at 80±10 percent of the total service life to 1 ppm leakage, as determined by continuing each test described in §§ 84.252(b), 84.253(b), and 84.254(b) until a 1 ppm leakage of vinyl chloride occurs.

(b) The applicant shall provide sufficient pretest data to verify the performance of the end-of-service-life indicator required in paragraph (a) of this section.

§ 84.256 Quality control requirements.

(a) In addition to the construction and performance requirements specified in §§ 84.251, 84.252, 84.253, 84.254, and 84.255, the quality control requirements in paragraphs (b), (c), and (d) of this section apply to approval of gas masks, chemical cartridge respirators, and powered air-purifying respirators for entry into and escape from vinyl chloride atmospheres containing adequate oxygen to support life.

(b) The respirators submitted for approval as described in paragraph (a) of this section shall be accompanied by a complete quality control plan meeting the requirements of subpart E of this part.

(c) (1) The applicant shall specify in the plan that a sufficient number of samples will be drawn from each bulk container of sorbent material and that where activated carbon is used, the following specific tests will be performed:

(i) Apparent density;

(ii) Iodine number;

(iii) Moisture content;

(iv) Carbon tetrachloride number; and

(v) Mesh size.

(2) The tests in paragraph (c)(1) of this section shall be performed in a quantity necessary to assure continued satisfactory conformance of the canisters and cartridges to the requirements of this subpart.

(d) Final performance quality control tests on the complete canisters and cartridges shall be accomplished using the bench tests and procedures prescribed in §§ 84.252, 84.253, 84.254, and 84.255.

§ 84.257 Labeling requirements.

(a) A warning shall be placed on the label of each gas mask, chemical-cartridge respirator, and powered air-purifying respirator, and on the label of each canister and cartridge, alerting the wearer to the need for a fitting test in accordance with the manufacturer's facepiece fitting instructions, providing service life information, providing specific instructions for disposal, and advising that the wearer may communicate to NIOSH any difficulties that may be experienced in the design and performance of any gas mask, chemical-cartridge respirator, or powered air-purifying respirator approved under the requirements of this subpart. The service lives of respirators meeting the test requirements of this subpart shall be specified as follows:

Chemical-cartridge respirator	1 hour.
Gas mask	4 hours.
Powered air-purifying respirator	4 hours.

(b) Where the service life of a respirator is approved for more than four hours, the service life for which the respirator has been approved will be specified.

§ 84.258 Fees.

The following fees shall be charged for the examination, inspection, and testing of complete assemblies and components of respirators described in §§ 84.250 and 84.251:

Complete gas mask	$1,100
Complete chemical-cartridge respirator	1,150
Complete powered air-purifying respirator	1,500
Canister or cartridge only	750

Subparts O through JJ [Reserved]

Subpart KK—Dust, Fume, and Mist; Pesticide; Paint Spray; Powered Air-Purifying High Efficiency Respirators and Combination Gas Masks

§ 84.1100 Scope and effective dates.

The purpose of this subpart KK is to establish procedures and requirements for issuing extensions of approval of particulate respirators certified prior to July 10, 1995 under the provisions of 30 CFR part 11 (See 30 CFR part 11 edition, as revised July 1, 1994.), new approvals and extensions of approval of particulate respirators for applications that are in NIOSH receipt on July 10, 1995, and approval of powered air-purifying respirators.

(a) Air-purifying respirators with particulate filters approved under the provisions of this subpart after July 10, 1995 will have a 30 CFR part 11 approval label.

(b) Only changes or modifications of non-powered air-purifying respirators with particulate filters approved under the provisions of subparts I, K, L, or M of 30 CFR part 11 or paragraph (a) of this section and deemed necessary by NIOSH to ensure the health and safety of the wearer will be approved until July 10, 1998 and will have a 30 CFR part 11 approval label.

(c) Only changes or modifications of powered air-purifying respirators with particulate filters approved under the provisions of subparts I, K, L, or M of 30 CFR part 11 or paragraph (a) of this section and deemed necessary by NIOSH to ensure the health and safety of the wearer will be approved under this subpart until July 10, 1998 and will have a 30 CFR part 11 label.

(d) Approval of powered air-purifying respirators will be issued under this subpart. Particulate filters for powered air-purifying respirators approved under the provisions of this subpart shall be only high-efficiency (HEPA) as described in § 84.1130(a)(4) and will carry a 42 CFR part 84 approval label. In addition, changes or modifications of powered HEPA air-purifying respirators approved under the provisions of this subpart KK will be approved under this subpart and will have a 42 CFR part 84 approval label.

§ 84.1101 Definitions.

As used in this subpart

(a) *Air Contamination Level* means the standards of contaminant levels prescribed by the Secretary of Labor in accordance with the provisions of the Occupational Safety and Health Act of 1970 (Pub. L. 91–596; 84 Stat. 1590).

(b) *DOP* means a homogenous liquid aerosol, having a particle diameter of 0.3 micrometer, which is generated by vaporization and condensation of dioctyl phthalate.

(c) *Pesticide* means:

(1) Any substance or mixture of substances (including solvents and impurities) intended to prevent, destroy, repel, or mitigate any insect, rodent, nematode, fungus, weed, or other form of plant or animal life or virus; and

(2) Any substance or mixture of substances (including solvents and impurities) intended for use as a plant regulator, defoliant, or desiccant, as defined in the Federal Insecticide,

Fungicide, and Rodenticide Act of 1947, as amended (7 U.S.C. 135–135k), excluding fumigants which are applied as gases or vapors or in a solid or liquid form as pellets or poured liquids for subsequent release as gases or vapors.

(d) *Radionuclide* means an atom identified by the constitution of its nucleus (specified by the number of protons Z, number of neutrons N, and energy, or, alternatively, by the atomic number Z, mass number A=(N+Z), and atomic mass) which exists for a measurable time; decays or disintegrates spontaneously, emits radiation, and results in the formation of new nuclides.

(e) *Smoke* means the products of incomplete combustion of organic substances in the form of solid and liquid particles and gaseous products in air, usually of sufficient concentration to perceptibility obscure vision.

§ 84.1102 Examination, inspection and testing of complete respirator assemblies; fees.

The following fees shall be charged by the Institute for the examination, inspection and testing of complete respirator assemblies approved under this subpart:

(a) Gas masks with particulate filter, including pesticide gas masks—

(1) Single hazard—$1,100.

(2) Type N—$4,100.

(b) Dust, fume and mist respirators—

(1) Single particulate hazard having an Air Contamination Level more than 0.05 mg./m.^{3} or 2 million particles per cubic foot—$500.

(2) Combination particulate hazards having an Air Contamination Level more than 0.05 mg./m.^{3} or 2 million particles per cubic foot—$750.

(3) Particulate hazards having an Air Contamination Level less than 0.05 mg./m.^{3} or 2 million particles per cubic foot, radon daughters —$1,250.

(4) All dusts, fumes and mists—$2,000.

(c) Paint spray respirators—$1,600.

(d) Pesticide respirators—$1,600.

(e) Chemical cartridge respirators with particulate filter—$1,150.

§ 84.1103 Approval labels and markings; approval of contents; use.

(a) Full-scale reproductions of approval labels and markings, and a sketch or description of the method of application and position on the harness, container, canister, cartridge, filter, or other component, together with instructions for the use and maintenance of the respirator shall be submitted to MSHA and the Institute for approval.

(b) Approval labels for non-powered and powered air-purifying dust, fume, mist respirators approved prior to July 10, 1995 under the provisions of subpart K of 30 CFR part 11 (See 30 CFR Part 11 edition, revised as of July 1, 1994.) shall bear the emblem of the Mine Safety and Health Administration and the seal of the Department of Health and Human Services, the applicant's name and address, an approval number assigned by the Institute, a statement that the respirator was tested and approved under subpart K of 30 CFR part 11 and, where appropriate, restrictions or limitations placed upon the use of the respirator by the Institute. The approval number assigned by the Institute shall be designated by the prefix TC and a serial number.

(c) Approval labels for powered air-purifying respirators approved under the provisions of this subpart shall bear the emblem of the National Institute for Occupational Safety and Health and the seal of the Department of Health and Human Services, the applicant's name and address, an approval number assigned by the Institute, a statement stating the respirator was tested under the provisions of this subpart, and, where appropriate, restrictions or limitations placed upon the use of the respirator by the Institute. The approval number assigned by the Institute shall be designated by the prefix TC and a serial number.

(c) The Institute shall, where necessary, notify the applicant when additional labels, markings, or instructions will be required.

(d) Approval labels and markings shall only be used by the applicant to whom they were issued.

(e) Legible reproductions or abbreviated forms of the label approved by the Institute for use on each respirator shall be attached to or printed at the following locations:

Respirator type	Label type	Location
Gas mask with a particulate filter, including pesticide gas mask.	Entire	Mask and container.
Dust, fume, and mist respirators	Entire	Respirator container and filter container.
	Abbreviated	Filters.
Chemical-cartridge respirator with a particulate filter, including paint spray respirator.	Entire	Respirator container, cartridge container, and filter containers (where applicable).
	Abbreviated	Cartridges and filters and filter containers.
Pesticide respirator	Entire	Respirator container, and cartridge and filter containers.
	Abbreviated	Cartridges and filters.

(f) The use of any MSHA and Institute approval label obligates the applicant to whom it is issued to maintain or cause to be maintained the approved quality control sampling schedule and the acceptable quality level for each characteristic tested, and to assure that it is manufactured according to the drawings and specifications upon which the certificate of approval is based.

(g) Each respirator, respirator component, and respirator container shall, as required by the Institute to assure quality control and proper use of the respirator, be labeled distinctly to show the name of the applicant, and the name and letters or numbers by which the respirator or respirator component is designated for trade purposes, and the lot number, serial number, or approximate date of manufacture.

§ 84.1130 Respirators; description.

(a) Dust, fume, and mist respirators, including all completely assembled respirators designed for use as respiratory protection during entry into and escape from atmospheres which contain adequate oxygen to support life and hazardous particulates, are described as follows:

(1) Air-purifying respirators, either with replaceable or reusable filters, designed as respiratory protection against dusts:

(i) Having an air contamination level not less than 0.05 milligram per cubic meter of air, including but not limited to coal, arsenic, cadmium, chromium, lead, and manganese; or

(ii) Having an air contamination level not less than 2 million particles per cubic foot of air, including but not limited to aluminum, flour, iron ore, and free silica, resulting principally from the disintegration of a solid, e.g., dust clouds produced in mining,

quarrying, and tunneling, and in dusts produced during industrial operations, such as grinding, crushing, and the general processing of minerals and other materials.

(2) Air-purifying respirators, with replaceable filters, designed as respiratory protection against fumes of various metals having an air contamination level not less than 0.05 milligram per cubic meter, including but not limited to aluminum, antimony, arsenic, cadmium, chromium, copper, iron, lead, magnesium, manganese, mercury (except mercury vapor), and zinc, which result from the sublimation or condensation of their respective vapors, or from the chemical reaction between their respective vapors and gases.

(3) Air-purifying respirators, with replaceable filters, designed as respiratory protection against mists of materials having an air contamination level not less than 0.05 milligram per cubic meter or 2 million particles per cubic foot, e.g., mists produced by spray coating with vitreous enamels, chromic acid mist produced during chromium plating, and other mists of materials whose liquid vehicle does not produce harmful gases or vapors.

(4) Air-purifying respirators, with replaceable filters, designed as respiratory protection against dusts, fumes, and mists having an air contamination level less than 0.05 milligram per cubic meter, including but not limited to lithium hydride and beryllium, and against radionuclides.

(5) Air-purifying respirators, with replaceable filters, designed as respiratory protection against radon daughters, and radon daughters attached to dusts, fumes, and mists.

(6) Air-purifying respirators, with replaceable filters, designed as respiratory protection against asbestos-containing dusts and mists.

(7) Air-purifying respirators, with replaceable filters, designed as protection against various combinations of particulate matter.

(8) Air-purifying dust respirators designed as respiratory protection against pneumoconiosis- and fibrosis-producing dusts, or dusts and mists, including but not limited to aluminum, asbestos, coal, flour, iron ore, and free silica.

(b) Gas masks containing filters for protection against dusts, fumes, mists, and smokes in combination with gases, vapors, or gases and vapors. These respirators are not for use against gases or vapors with poor warning properties (except where MSHA or Occupational Safety and Health Administration standards may permit such use for a specific gas or vapor) or those which generate high heats of reaction with sorbent material in the canister.

(c) Pesticide respirators, including all completely assembled respirators which are designed for use as respiratory protection during entry into and escape from atmospheres which contain pesticide hazards, are described according to their construction as follows:

(1) Front-mounted or back-mounted gas masks;

(2) Chin-style gas mask;

(3) Chemical cartridge;

(4) Air-purifying respirator with attached blower; and,

(5) Other devices, including combination respirators.

(d) Respirators with cartridges containing or having attached to them, filters for protection against mists of paints, lacquers, and enamels. These respirators are not for use against gases or vapors with poor warning properties (except where MSHA or Occupational Safety and Health Administration standards may permit such use for a specific gas or vapor) or those which generate high heats of reaction with sorbent material in the cartridge.

(e) Respirators with cartridges containing or having attached to them filters for protection against dusts, fumes, and mists, except the mists of paints, lacquers, and enamels. These respirators are not for use against gases or vapors with poor warning properties (except where MSHA or Occupational Safety and Health Administration standards may permit such use for a specific gas or vapor) or those which generate high heats of reaction with sorbent material in the cartridge.

§ 84.1131 Respirators; required components.

(a) Each respirator described in § 84.1130 shall, where its design requires, contain the following component parts:

(1) Facepiece, mouthpiece with noseclip, hood, or helmet;

(2) Filter unit, canister with filter, or cartridge with filter;

(3) Harness;

(4) Attached blower; and

(5) Breathing tube.

(b) The components of each respirator shall meet the minimum construction requirements set forth in Subpart G of this part.

§ 84.1132 Breathing tubes; minimum requirements.

(a) Flexible breathing tubes used in conjunction with respirators shall be designed and constructed to prevent:

(1) Restriction of free head movement;

(2) Disturbance of the fit of facepieces, mouthpieces, hoods, or helmets;

(3) Interference with the wearer's activities; and

(4) Shutoff of airflow due to kinking, or from chin or arm pressure.

§ 84.1133 Harnesses; installation and construction; minimum requirements.

(a) Each respirator shall, where necessary, be equipped with a suitable harness designed and constructed to hold the components of the respirator in position against the wearer's body.

(b) Harnesses shall be designed and constructed to permit easy removal and replacement of respirator parts, and, where applicable, provide for holding a full facepiece in the ready position when not in use.

§ 84.1134 Respirator containers; minimum requirements.

(a) Except as provided in paragraph (b) of this section each respirator shall be equipped with a substantial, durable container bearing markings which show the applicant's name, the type of respirator it contains, and all appropriate approval labels. Except for dust, fume, and mist respirators, the commercial designation of the respirator it contains shall be shown.

(b) Containers for single-use respirators may provide for storage of more than one respirator, however, such containers shall be designed and constructed to prevent contamination of respirators which are not removed, and to prevent damage to respirators during transit.

(c) Containers for gas masks combinations shall be designed and constructed to permit easy removal of the mask.

§ 84.1135 Half-mask facepieces, full facepieces, hoods, helmets, and mouthpieces; fit; minimum requirements.

(a) Half-mask facepieces and full facepieces shall be designed and constructed to fit persons with various facial shapes and sizes either:

(1) By providing more than one facepiece size; or

(2) By providing one facepiece size which will fit varying facial shapes and sizes.

(b) Full facepieces shall provide for optional use of corrective spectacles or lenses, which shall not reduce the respiratory protective qualities of the respirator.

(c) Hoods and helmets shall be designed and constructed to fit persons with various head sizes, provide for the optional use of corrective spectacles or lenses, and insure against any restriction of movement by the wearer.

(d) Mouthpieces shall be equipped with noseclips which are securely attached to the mouthpiece or respirator and provide an airtight seal.

(e) Facepieces, hoods, and helmets shall be designed to prevent eyepiece fogging.

(f) Half-mask facepieces shall not interfere with the fit of common industrial safety corrective spectacles, as determined by the Institute's facepiece tests in §§ 84.1141, 84.1142, and 84.1156(b).

§ 84.1136 Facepieces, hoods, and helmets; eyepieces; minimum requirements.

(a) Facepieces, hoods, and helmets shall be designed and constructed to provide adequate vision which is not distorted by the eyepieces.

(b) All eyepieces of gas masks combinations shall be designed and constructed to be impact and penetration resistant. Federal Specification, Mask, Air Line: and Respirator, Air Filtering, Industrial, GGG–M–125d, October 11, 1965, with interim amendment-1, July 30, 1969, is an example of an appropriate standard for determining impact and penetration resistance. Copies of GGG–M–125d may be obtained from the NIOSH, Certification and Quality Assurance Branch, 1095 Willowdale Road, Morgantown, WV 26505–2888.

§ 84.1137 Inhalation and exhalation valves; minimum requirements.

(a) Inhalation and exhalation valves shall be protected against distortion.

(b) Inhalation valves shall be designed and constructed and provided where necessary to prevent excessive exhaled air from adversely affecting filters, cartridges, and canisters, except where filters of dust, fume, and mist respirators are specifically designed to resist moisture as prescribed in § 84.1145.

(c) Exhalation valves shall be:

(1) Provided where necessary;

(2) Protected against damage and external influence; and

(3) Designed and constructed to prevent inward leakage of contaminated air.

§ 84.1138 Head harnesses; minimum requirements.

(a) All facepieces shall be equipped with head harnesses designed and constructed to provide adequate tension during use and an even distribution of pressure over the entire area in contact with the face.

(b) Facepiece head harnesses, except those employed on single-use dust, fume, and mist respirators, shall be adjustable and replaceable.

(c) Mouthpieces shall be equipped, where applicable, with adjustable and replaceable harnesses, designed and constructed to hold the mouthpiece in place.

§ 84.1139 Air velocity and noise levels; hoods and helmets; minimum requirements.

Noise levels generated by the respirator will be measured inside the hood or helmet at maximum airflow obtainable and shall not exceed 80 dBA.

§ 84.1140 Dust, fume, and mist respirators; performance requirements; general.

Dust, fume, and mist respirators and the individual components of each such device shall, as appropriate, meet the requirements for performance and protection specified in the tests described in §§ 84.1141 through 84.1152 and prescribed in Tables 12 and 13.

§ 84.1141 Isoamyl acetate tightness test; dust, fume, and mist respirators designed for respiratory protection against fumes of various metals having an air contamination level not less than 0.05 milligram per cubic meter; minimum requirements.

(a) The respirator will be modified in such a manner that all of the air that normally would be inhaled through the inhalation port(s) is drawn through an efficient activated charcoal-filled canister, or cartridge(s), without interference with the face-contacting portion of the facepiece.

(b) The modified respirator will be worn by persons for at least 2 minutes each in a test chamber containing 100 parts (by volume) of isoamyl-acetate vapor per million parts of air.

(c) The odor of isoamyl-acetate shall not be detected by the wearers of the modified respirator while in the test atmosphere.

§ 84.1142 Isoamyl acetate tightness test; respirators designed for respiratory protection against dusts, fumes, and mists having an air contamination level less than 0.05 milligram per cubic meter, or against radionuclides; minimum requirements.

(a) The applicant shall provide a charcoal-filled canister or cartridge of a size and resistance similar to the filter unit with connectors which can be attached to the facepiece in the same manner as the filter unit.

(b)(1) The canister or cartridge will be used in place of the filter unit, and persons will each wear a modified half-mask facepiece for 5 minutes in a test chamber containing 100 parts (by volume) of isoamyl-acetate vapor per million parts of air.

(2) The following work schedule will be performed by each wearer in the test chamber:

(i) Two minutes walking, nodding, and shaking head in normal movements; and

(ii) Three minutes exercising and running in place.

(3) The facepiece shall be capable of adjustment, according to the applicant's instructions, to each wearer's face, and the odor of isoamyl-acetate shall not be detectable by any wearer during the test.

(c) Where the respirator is equipped with a full facepiece, hood, helmet, or mouthpiece, the canister or cartridge will be used in place of the filter unit, and persons will each wear the modified respiratory-inlet covering for 5 minutes in a test chamber containing 1,000 parts (by volume) of isoamyl-acetate vapor per million parts of air, performing the work schedule specified in paragraph (b)(2) of this section.

§ 84.1143 Dust, fume, and mist air-purifying filter tests; performance requirements; general.

Dust, fume, and mist respirators will be tested in accordance with the schedule set forth in Table 13 of this subpart to determine their effectiveness as protection against the particulate hazards specified in Table 13.

§ 84.1144 Silica dust test for dust, fume, and mist respirators; single-use or reusable filters; minimum requirements.

(a) Three non-powered respirators with single-use filters will be tested for periods of 90 minutes each at a continuous airflow rate of 32 liters per minute.

(b) The relative humidity in the test chamber will be 20–80 percent, and the room temperature approximately 25° C.

(c) The test suspension in the chamber will not be less than 50 nor more than 60 milligrams of flint (99+ percent free silica) per cubic meter of air.

(d) The flint in suspension will be ground to pass 99+ percent through a 270-mesh sieve.

(e) The particle-size distribution of the test suspension will have a geometric mean of 0.4 to 0.6 micrometer, and the standard geometric deviation will not exceed 2.

(f) The total amount of unretained test suspension in samples taken during testing shall not exceed 1.5 milligrams for a non-powered air-purifying respirator.

(g) Three non-powered respirators with reusable filters will be tested and shall meet the requirements specified in paragraphs (a) through (f) of this section; each filter shall be tested three times: Once as received; once after cleaning; and once after recleaning. The applicant's instructions shall be followed for each cleaning.

§ 84.1145 Silica dust test; non-powered single-use dust respirators; minimum requirements.

(a) Three respirators will be tested.

(b) As described in § 84.1144, airflow will be cycled through the respirator by a breathing machine at the rate of 24 respirations per minute with a minute volume of 40 liters; a breathing machine cam with a work rate of 622 kg.-m.2/minute shall be used.

(c) Air exhaled through the respirator will be 35° ±2° C. with 94 ±3 percent relative humidity. #

(d) Air inhaled through the respirator will be sampled and analyzed for respirator leakage.

(e) The total amount of unretained test suspension, after drying, in samples taken during testing, shall not exceed 1.8 milligrams for any single test.

§ 84.1146 Lead fume test for dust, fume, and mist respirators; minimum requirements.

(a) Three non-powered respirators will be tested for a period of 312 minutes each at a continuous airflow rate of 32 liters per minute.

(b) The relative humidity in the test chamber will be 20–80 percent, and the room temperature approximately 25° C.

(c) The test suspension in the test chamber will not be less than 15 nor more than 20 milligrams of freshly generated lead-oxide fume, calculated as lead (Pb), per cubic meter of air.

(d) The fume will be generated by impinging an oxygen-gas flame on molten lead.

(e) Samples of the test suspension will be taken during each test period for analysis.

(f) The total amount of unretained test suspension in the samples taken during testing, which is analyzed and calculated as lead (Pb), shall not exceed 1.5 milligrams of lead for a non-powered air-purifying respirator.

§ 84.1147 Silica mist test for dust, fume, and mist respirators; minimum requirements.

(a) Three non-powered respirators will be tested for a period of 312 minutes each at a continuous airflow rate of 32 liters per minute.

(b) The room temperature in the test chamber will be approximately 25°C.

(c) The test suspension in the test chamber will not be less than 20 nor more than 25 milligrams of silica mist, weighed as silica dust, per cubic meter of air.

(d) Mist will be produced by spraying an aqueous suspension of flint (99+ percent free silica), and the flint shall be ground to pass 99+ percent through a 270-mesh sieve.

(e) Samples of the test suspension will be taken during each test period for analysis.

(f) The total amount of silica mist unretained in the samples taken during testing, weighed as silica dust, shall not exceed 2.5 milligrams for a non-powered air-purifying respirator.

§ 84.1148 Tests for respirators designed for respiratory protection against more than one type of dispersoid; minimum requirements.

Respirators designed as respiratory protection against more than one particulate hazard (dust, fume, or mist) shall comply with all the requirements of this part, with respect to each of the specific hazards involved.

§ 84.1149 Airflow resistance tests; all dust, fume, and mist respirators; minimum requirements.

(a) Resistance to airflow will be measured in the facepiece, mouthpiece, hood, or helmet of a dust, fume, or mist respirator mounted on a test fixture with air flowing at a continuous rate of 85 liters per minute, both before and after each test conducted in accordance with §§ 84.1144 through 84.1147.

(b) The maximum allowable resistance requirements for dust, fume, and mist respirators are as follows:

MAXIMUM RESISTANCE

[mm. water-column height]

Type of respirator	Initial inhalation	Final inhalation	Exhalation
Pneumoconiosis- and fibrosis-producing dusts, or dusts and mists	12	15	15
Dust, fume, and mist, with single-use filter	30	50	20
Dust, fume, and mist, with reusable filter	20	40	20
Radon daughter	18	[1] 25	15
Asbestos dust and mist	18	25	15

[1] Measured after silica dust test described in § 84.1144.

§ 84.1150 Exhalation valve leakage test; minimum requirements.

(a) Dry exhalation valves and valve seats will be subjected to a suction of 25 mm. water-column height while in a normal operating position.

(b) Leakage between the valve and valve seat shall not exceed 30 milliliters per minute.

§ 84.1151 DOP filter test; respirators designed as respiratory protection against dusts, fumes, and mists having an air contamination level less than 0.05 milligram per cubic meter and against radionuclides; minimum requirements.

(a) All single air-purifying respirator filter units will be tested in an atmosphere concentration of 100 micrograms of DOP per liter of air at continuous flow rates of 32 and 85 liters per minute for a period of 5 to 10 seconds.

(b) Where filters are to be used in pairs, the flow rates will be 16 and 42.5 liters per minute, respectively, through each filter.

(c) The filter will be mounted on a connector in the same manner as used on the respirator, and the total leakage for the connector and filter shall not exceed 0.03 percent of the ambient DOP concentration at either flow rate.

§ 84.1152 Silica dust loading test; respirators designed as protection against dusts, fumes, and mists having an air contamination level less than 0.05 milligram per cubic meter and against radionuclides; minimum requirements.

(a) Three non-powered respirators will be tested in accordance with the provisions of § 84.1144, or equivalent, and shall meet the minimum requirements of §§ 84.1144 and 84.1149.

(b) Three powered air-purifying respirators will be tested in accordance with the provisions of § 84.1144 except they will be tested for a period of 4 hours each at a flowrate not less than 115 liters per minute to tight-fitting facepieces, and not less than 170 liters per minute to loose-fitting hoods and helmets. The total amount of unretained test suspension in samples taken during testing shall not exceed 14.4 milligrams for a powered air-purifying respirator with tight-fitting facepiece, and 21.3 milligrams for a powered air-purifying respirator with loose-fitting hood or helmet. They shall meet the minimum requirements of § 84.1149.

§ 84.1153 Dust, fume, mist, and smoke tests; canister bench tests; gas masks canisters containing filters; minimum requirements.

(a) Gas mask canisters containing filters for protection against dusts, fumes, mists, and smokes in combination with gases, vapors, or gases and vapors, will be tested as prescribed in § 84.1140 except for the breathing resistance which will be in accordance with § 84.122.

(b) Gas mask canisters designed for protection against smokes will be tested in an atmospheric concentration of 100 micrograms of dioctyl phthalate per liter of air at continuous flow rates of 32 liters per minute and 85 liters per minute for a period of 5 to 10 seconds, and the DOP leakage through the canister shall not exceed 0.03 percent of the test concentration.

(c) Gas mask canisters containing filters for protection against dusts, fumes, mists, and smokes in combination with gases, vapors, or gases and vapors, will be tested as prescribed in § 84.126.

§ 84.1154 Canister and cartridge requirements.

(a) Where two or more canisters or cartridges are used in parallel, their resistance to airflow shall be essentially equal.

(b) The color and markings of all canisters and cartridges or labels shall conform with the requirements of the American National Standards Institute, American National Standard for Identification of Air-Purifying Respirator Canisters and Cartridges, ANSI K13.1–1973. ANSI K13.1 is incorporated by reference and has been approved by the Director of the Federal Register in accordance with 5 U.S.C. 552(a) and 1 CFR part 51. Copies may be obtained from American National Standards Institute, Inc., 1430 Broadway, New York, NY 10018. Copies may be inspected at the NIOSH, Certification and Quality Assurance Branch, 1095 Willowdale Road, Morgantown, WV 26505–2888, or at the Office of the Federal Register, 800 North Capitol Street, NW., suite 700, Washington, DC.

§ 84.1155 Filters used with canisters and cartridges; location; replacement.

(a) Particulate matter filters used in conjunction with a canister or cartridge shall be located on the inlet side of the canister or cartridge.

(b) Filters shall be incorporated into or firmly attached to the canister or cartridge and each filter assembly shall, where applicable, be designed to permit its easy removal from and replacement on the canister or cartridge.

§ 84.1156 Pesticide respirators; performance requirements; general.

Pesticide respirators and the individual components of each such device shall, as appropriate, meet the following minimum requirements for performance and protection:

(a) *Breathing resistance test.* (1) Airflow resistance will be measured in the facepiece, mouthpiece, hood, or helmet of a pesticide respirator mounted on a test fixture with air flowing at a continuous rate of 85 liters per minute, both before and after each test conducted in accordance with paragraphs (c) and (f) of this section.

(2) The maximum allowable resistance requirements for pesticide respirators are as follows:

MAXIMUM RESISTANCE

[mm. water-column height]

Type of pesticide respirator	Inhalation		Exhalation
	Initial	Final [1]	
Front- or back-mounted gas mask	70	85	20
Chin-style gas mask	65	80	20
Powered air-purifying [2]	[2] 50	[2] 70	20
Chemical Cartridge	50	70	20

[1] Measured at end of the service life specified in Table 14 of this subpart.
[2] Resistance of filter(s), cartridge(s), and breathing tube(s) only with blower not operating.

(b) *Facepiece test.* (1) The complete pesticide respirator will be fitted to the faces of persons having varying facial shapes and sizes.

(2) Where the applicant specifies a facepiece size or sizes for his respirator together with the approximate measurements of faces they are designed to fit, the Institute will provide test subjects to suit such facial measurements.

(3) Any pesticide respirator part which must be removed to perform the facepiece fit test shall be replaceable without special tools and without disturbing facepiece fit.

(4) The facepiece or mouthpiece fit test using positive or negative pressure recommended by the applicant and described in his instructions will be used during each test.

(5)(i) Each wearer will enter a chamber containing 1,000 p.p.m. isoamyl-acetate vapor for a respirator equipped with a full facepiece, mouthpiece, hood, or helmet and 100 p.p.m. isoamyl-acetate vapor for a respirator equipped with a half-mask facepiece.

(ii) The facepiece, mouthpiece, hood, or helmet may be adjusted, if necessary, in the test chamber before starting the test.

(iii) Each wearer will remain in the chamber while performing the following activities:

(A) Two minutes, nodding and turning head;

(B) Two minutes, calisthenic arm movements;

(C) Two minutes, running in place; and

(D) Two minutes, pumping with a tire pump into a 28-liter (1 cubic foot) container.

(iv) Each wearer shall not detect the odor of isoamyl-acetate during the test.

(c) *Silica dust test.* Three completely assembled pesticide respirators will be tested with a mechanical-testing apparatus as follows:

(1) Temperature in the test chamber will be approximately 25° C.

(2) Continuous airflow through the respirator will be 32 liters per minute for front-mounted, back-mounted, and chin-style gas mask pesticide respirators and chemical cartridge pesticide respirators, and not less than 115 (4 cubic feet) liters per minute to tight-fitting facepieces and 170 liters (6 cubic feet) per minute to loose-fitting hoods and helmets of powered air-purifying respirators.

(3) The test aerosol will contain 50–60 milligrams of 99+ percent free silica per cubic meter of air.

(4) The particle size distribution of the test suspension will have a geometric mean diameter of 0.4 to 0.6 micrometer, with a standard geometric deviation less than 2.

(5) Front-mounted, back-mounted, and chin-style gas mask pesticide respirators and chemical cartridge pesticide respirators will be tested for 90 minutes and powered air-purifying respirators will be tested for 4 hours.

(d) *Lead fume test.* Three completely assembled pesticide respirators will be tested with a mechanical-testing apparatus as follows:

(1) Continuous airflow through the respirator will be 32 liters per minute for front-mounted, back-mounted, and chin-style gas mask pesticide respirators and chemical cartridge pesticide respirators and not less than 115 liters (4 cubic feet) per minute, for powered air-purifying respirators with tight-fitting facepieces, and not less than 170 liters (6 cubic feet) per minute for powered air-purifying respirators with loose-fitting hoods and helmets.

(2) The test aerosol will contain 15–20 milligrams of freshly generated lead-oxide fume, calculated as lead, per cubic meter of air.

(3) The fume will be generated by impinging an oxygen-gas flame on molten lead.

(4) Front-mounted, back-mounted, and chin-style gas mask pesticide respirators and chemical cartridge pesticide respirators will be tested for 90 minutes and powered air-purifying pesticide respirators will be tested for 4 hours.

(5) The total amount of unretained test suspension, which is analyzed and calculated as lead, shall not exceed:

(i) 0.43 milligram for any 90-minute test;

(ii) 4.8 milligrams for any 4-hour test made at 115 liters (4 cubic feet) per minute; or

(iii) 6.2 milligrams for any 4-hour test made at 170 liters (6 cubic feet) per minute.

(e) *Dioctyl-phthalate test.* (1) All canisters submitted for use with front-mounted and back-mounted gas mask pesticide respirators will be tested in an atmospheric concentration of 100 micrograms of dioctyl-phthalate per liter of air at continuous flow rates of 32 and 85 liters per minute for a test period of 5 to 10 seconds.

(2) The DOP leakage through the canister shall not exceed 0.03 percent of the ambient DOP concentration.

(f) *Bench tests for pesticide respirators.* (1)(i) Bench tests will be made on an apparatus that allows the test atmosphere at 50±5 percent relative humidity and at room temperature (25°±2.5° C.) to enter the canister or cartridge at predetermined concentrations and rates of flow, and that has a means for determining the test life of the canister or cartridge against carbon tetrachloride.

(ii) Canisters and cartridges will be tested as they are used on each pesticide respirator, either singly or in pairs.

(iii) Three canisters or cartridges or pairs of cartridges will be removed from containers and tested as received from the applicant.

(iv) Two canisters, cartridges, or pairs of cartridges will be equilibrated at room temperature by passing 25 percent relative humidity air through them at the following flow rates (expressed as liters per minute (l.p.m.)) for 6 hours:

Type of canister or cartridge	Airflow rate, l.p.m.
Air-purifying canister	64
Air-purifying cartridge	25
Powered air-purifying with tight-fitting facepiece	115
Powered air-purifying with loose-fitting hood or helmet	170

(v) Two canisters, cartridges, or pairs of cartridges will be equilibrated at room temperature by passing 85 percent relative humidity air through them at the flow rates stated in paragraph (f)(1)(iv) of this section for 6 hours.

(vi) The equilibrated canisters or cartridges will be resealed, kept in an upright position at room temperature, and tested within 18 hours.

(2) Canisters and cartridges tested in accordance with the provisions of this section shall meet the requirements specified in Table 14 of this subpart.

§ 84.1157 Chemical cartridge respirators with particulate filters; performance requirements; general.

Chemical cartridge respirators with particulate filters and the individual components of each such device shall, as appropriate, meet the following minimum requirements for performance and protection:

(a) *Breathing resistance test.* (1) Resistance to airflow will be measured in the facepiece, mouthpiece, hood, or helmet of a chemical cartridge respirator mounted on a test fixture with air flowing at a continuous rate of 85 liters per minute, both before and after each test conducted in accordance with paragraphs (d) through (f) of this section.

(2) The maximum allowable resistance requirements for chemical cartridge respirators are as follows:

MAXIMUM RESISTANCE

[mm. water-column height]

Type of chemical cartridge respirator	Inhalation		Exhalation
	Initial	Final [1]	
For gases, vapors, or gases and vapors, and dusts, fumes, and mists	50	70	20
For gases, vapors, or gases and vapors, and mists of paints, lacquers, and enamels	50	70	20

[1] Measured at end of service life specified in Table 11 in subpart L of this part.

(b) *Facepiece test.* The facepiece test will be conducted as specified in § 84.205.

(c) *Lacquer and enamel mist tests; general.* (1) Three respirators with cartridges containing or having attached to them, filters for protection against mists of paints, lacquers, and enamels shall be tested in accordance with the provisions of paragraph (f) of this section.

(2) In addition to the test requirements set forth in paragraph (c)(1) of this section, three such respirators will be tested against each aerosol in accordance with the provisions of paragraphs (d) and (e) of this section.

(d) *Lacquer mist test.* (1) Temperature in the test chamber will be approximately 25° C.

(2) Continuous airflow through the respirator will be 32 liters per minute for air-purifying respirators, and not less than 115 liters per minute to tight fitting facepieces and 170 liters per minute to

loose-fitting hoods and helmets of powered air-purifying respirators.

(3) Airflow through the chamber will be 20–25 air changes per minute.

(4) The atomizer employed will be a No. 64–5 nozzle with setup 3, or equivalent, operating at 69 kN/m.^{2} (10 pounds per square inch gage).

(5) The test aerosol will be prepared by atomizing a mixture of one volume of clear cellulose nitrate lacquer and one volume of lacquer thinner. The lacquer described in Federal Specification TT–L–31, October 7, 1953, is an example of an acceptable lacquer. Copies of TT–L–31 may be inspected or obtained from the NIOSH, Certification and Quality Assurance Branch, 1095 Willowdale Road, Morgantown, WV 26505–2888.

(6) The concentration of cellulose nitrate in the test aerosol will be 95–125 milligrams per cubic meter.

(7) The test aerosol will be drawn to each respirator for a total of 156 minutes for air-purifying respirators and 240 minutes for powered air-purifying respirators.

(8) The total amount of unretained mist in the samples taken during testing, weighed as cellulose nitrate, shall not exceed 5 milligrams for an air-purifying respirator, 28 milligrams for a powered air-purifying respirator with tight-fitting facepiece, and 41 milligrams for a powered air-purifying respirator with loose-fitting hood or helmet.

(e) *Enamel mist test.* (1) Temperature in the test chamber will be approximately 25° C.

(2) Continuous airflow through the respirator will be 32 liters per minute for air-purifying respirators, and not less than 115 liters per minute to tight-fitting facepieces and 170 liters per minute to loose-fitting hoods and helmets of powered air-purifying respirators.

(3) Airflow through the chamber will be 20–25 air changes per minute.

(4) The atomizer employed will be a No. 64 nozzle with setup 1A, or equivalent, operating at 69 kN/m.^{2} (10 pounds per square inch gage).

(5) The test aerosol will be prepared by atomizing a mixture of 1 volume of white enamel and 1 volume of turpentine. The enamel described in Federal Specification TT-E–489b, May 12, 1953, with amendment-1 of 9 November 1955 is an example of an acceptable enamel. Copies of TT-E–489b may be inspected or obtained from the NIOSH, Certification and Quality Assurance Branch, 1095 Willowdale Road, Morgantown, WV 26505–2888.

(6) The concentration of pigment in the test aerosol, weighed as ash, will be 95–125 milligrams per cubic meter.

(7) The test aerosol will be drawn to each respirator for a total of 156 minutes for air-purifying respirators and 240 minutes for power air-purifying respirators.

(8) The total amount of unretained mist in the samples taken during testing, weighed as ash, shall not exceed 1.5 milligrams for any air-purifying respirator, 8.3 milligrams for a powered air-purifying respirator with tight-fitting facepiece, and 12.3 milligrams for a powered air-purifying respirator with loose-fitting hood or helmet.

(f) *Bench tests; gas and vapor tests.* (1) Bench tests will be made in accordance with § 84.207 and tested cartridges shall meet the minimum requirements set forth in Table 11 of subpart L of this part. Cartridges will be equilibrated in accordance with paragraph (f)(2) of this section.

(2)(i) Two powered air-purifying cartridges or pairs of cartridges will be equilibrated at room temperature by passing 25 percent relative humidity air through them at the following flow rates (expressed in liters per minute (l.p.m.)) for 6 hours:

Type of cartridge	Airflow rate, l.p.m.
Powered air purifying with tight-fitting facepiece	115
Powered air purifying with loose-fitting hood or helmet	170

(ii) Two powered air-purifying cartridges or pairs of cartridges will be equilibrated by passing 85 percent relative humidity air through them at the flow rates stated in paragraph (f)(2)(i) of this section.

(iii) All cartridges will be resealed, kept in an upright position, at room temperatures, and tested within 18 hours.

§ 84.1158 Dust, fume, and mist tests; respirators with filters; minimum requirements; general.

(a) Three respirators with cartridges containing, or having attached to them, filters for protection against dusts, fumes, and mists, except the mists of paints, lacquers, and enamels, will be tested in accordance with the provisions of § 84.1157(f).

(b) In addition to the test requirements set forth in paragraph (a) of this section, three such respirators will be tested, as appropriate, in accordance with the provisions of §§ 84.1141 through 84.1152; however, the maximum allowable resistance of complete dust, fume, and mist, and gas, vapor, or gas and vapor chemical cartridge respirators shall not exceed the maximum allowable limits set forth in § 84.1157(a)(2).

Tables to Subpart KK of Part 84

TABLE 12.—FACEPIECE TEST REQUIREMENTS

[42 CFR Part 84, Subpart KK]

Respirator types	Pressure tightness test [1]	Isoamyl acetate test	
		84.1141	84.1142
Dusts: Air Contamination Level not less than 0.05 mg/M^3 or 2 mppcf	X		
Fumes: Air Contamination Level not less than 0.05 mg/M^3	X	X	
Mists: Air Contamination Level not less than 0.05 mg/M^3 or 2 mppcf	X		
Dusts, Fumes, and Mists: Air Contamination Level less than 0.05 mg/M^3 or 2 mppcf, and radionuclides	X		X
Radon daughters	X	X	
Asbestos-containing dusts and mists	X		

[1] Test is required only where applicable.

TABLE 13.—AIR-PURIFYING AND POWERED AIR-PURIFYING RESPIRATOR FILTER TESTS REQUIRED FOR APPROVAL

[42 CFR Part 84, Subpart KK]

Respirator types	Silica dust tests			Lead fume test 84.1146	Silica mist test 84.1147	DOP test 84.1151
	84.1144	84.1145	84.1152			
Dusts: Air Contamination Level not less than 0.05 mg/M³ or 2 mppcf	X					
Fumes: Air Contamination Level not less than 0.05 mg/M³				X		
Mists: Air Contamination Level not less than 0.05 mg/M³ or 2 mppcf					X	
Dusts, Fumes, and Mists: Air Contamination Level less than 0.05 mg/M³ or 2 mppcf, and radionuclides			X			X
Radon daughters	[1] X				[2] X	
Asbestos-containing dusts and mists	[2] X				[3] X	
Single use dust and mist respirators		[3] X			[3] X	

[1] For resistance only.
[2] For penetration only.
[3] Test required only where applicable.

TABLE 14.—CARBON TETRACHLORIDE BENCH TESTS AND REQUIREMENTS FOR CANISTERS AND CARTRIDGES

[42 CFR part 84, Subpart KK]

Type of pesticide respirator	Test concentration p.p.m. CCl_4	Flow rate l.p.m.	Number of tests	Minimum life minutes[1]
Chest-mounted or back-mounted gas mask (as received)	20,000	64	3	12
Chest-mounted or back-mounted gas mask (equilibrated)	20,000	32	4	12
Chin-style gas mask (as received)	5,000	64	3	12
Chin-style gas mask (equilibrated)	5,000	32	4	12
Chemical Cartridge respirator (as received)	1,000	64	3	50
Chemical cartridge respirator (equilibrated)	1,000	32	4	50
Powered air-purifying respirator (tight-fitting facepiece, as received)	1,000	[2] 115	3	50
Powered air-purifying respirator (tight-fitting facepiece, equilibrated)	1,000	[2] 115	4	25
Powered air-purifying respirator (loose-fitting hood or helmet, as received)	1,000	[3] 170	3	50
Powered air-purifying respirator (loose-fitting hood or helmet, equilibrated)	1,000	[3] 170	4	25

[1] Minimum life will be determined at 5 p.p.m. leakage.
[2] The flow rate shall be the effective flow rate of the device, but shall be not less than 115 l.p.m.
[3] The flow rate shall be the effective flow rate of the device, but shall be not less than 170 l.p.m.

Note: The following appendix will not appear in the Code of Federal Regulations.

APPENDIX A TO PREAMBLE—COMPARISON OF FINAL RULE TO PROPOSED RULE

Proposed section	Final section	Change from proposal to final
84.1	84.1	No change from proposal.
84.2	84.2	No change from proposal.
84.3		Incorporation by reference section is not included in the final rule because of format requirements of the **Federal Register**.
84.4	84.3	No change from proposal.
84.10	84.10	No change from proposal.
84.11	84.11	No change from proposal.
84.12	84.12	No change from proposal.
84.20	84.20	No change from proposal.
84.21	84.21	No change from proposal.
84.22	84.22	No change from proposal.
84.30	84.30	No change from proposal.
84.31	84.31	No change from proposal.
84.32	84.32	No change from proposal.
84.33	84.33	No change from proposal.
84.34	84.34	No change from proposal.
84.35	84.35	No change from proposal.
84.36	84.36	No change from proposal.
84.40	84.40	No change from proposal.
84.41	84.41	Changed from proposal to final rule for new incorporation by reference wording.
84.42	84.42	No change from proposal.
84.43	84.43	No change from proposal.
84.50	84.50	No change from proposal.
84.51	84.51	No change from proposal.
84.52	84.52	No change from proposal.

APPENDIX A TO PREAMBLE—COMPARISON OF FINAL RULE TO PROPOSED RULE—Continued

Proposed section	Final section	Change from proposal to final
84.53	84.53	No change from proposal.
84.60	84.60	No change from proposal.
84.61	84.61	No change from proposal.
84.62	84.62	No change from proposal.
84.63	84.63	No change from proposal.
84.64	84.64	No change from proposal.
84.65	84.65	No change from proposal.
84.66	84.66	No change from proposal.
84.70	84.70	No change from proposal.
84.71	84.71	No change from proposal.
84.72	84.72	No change from proposal.
84.73	84.73	No change from proposal.
84.74	84.74	No change from proposal.
84.75	84.75	No change from proposal.
84.76	84.76	Changed from proposal to final rule for new incorporation by reference wording.
84.77	84.77	No change from proposal.
84.78	84.78	No change from proposal.
84.79	84.79	Changed from proposal to final rule for new incorporation by reference wording.
84.80	84.80	No change from proposal.
84.81	84.81	Changed from proposal to final rule for new incorporation by reference wording.
84.82	84.82	No change from proposal.
84.83	84.83	No change from proposal.
84.84	84.84	No change from proposal.
84.85	84.85	No change from proposal.
84.86	84.86	No change from proposal.
84.87	84.87	No change from proposal.
84.88	84.88	Changed from proposal to final rule for new incorporation by reference wording.
84.89	84.89	No change from proposal.
84.90	84.90	No change from proposal.
84.91	84.91	No change from proposal.
84.92	84.92	No change from proposal.
84.93	84.93	No change from proposal.
84.94	84.94	No change from proposal.
84.95	84.95	No change from proposal.
84.96	84.96	No change from proposal.
84.97	84.97	Changed from proposal to final rule for new incorporation by reference wording.
84.98	84.98	No change from proposal.
84.99	84.99	No change from proposal.
84.100	84.100	No change from proposal.
84.101	84.101	No change from proposal.
84.102	84.102	No change from proposal.
84.103	84.103	No change from proposal.
84.104	84.104	No change from proposal.
84.110	84.110	No change from proposal.
84.111	84.111	No change from proposal.
84.112	84.112	No change from proposal.
84.113	84.113	Changed from proposal to final rule for new incorporation by reference wording.
84.114	84.114	No change from proposal.
84.115	84.115	No change from proposal.
84.116	84.116	No change from proposal.
84.117	84.117	No change from proposal.
84.118	84.118	No change from proposal.
84.119	84.119	Changed from proposal to final rule for new incorporation by reference wording.
84.120	84.120	No change from proposal.
84.121	84.121	No change from proposal.
84.122	84.122	No change from proposal.
84.123	84.123	No change from proposal.
84.124	84.124	No change from proposal.
84.125	84.125	No change from proposal.
84.126	84.126	No change from proposal.
84.130	84.130	No change from proposal.
84.131	84.131	No change from proposal.
84.132	84.132	No change from proposal.
84.133	84.133	No change from proposal.
84.134	84.134	No change from proposal.
84.135	84.135	No change from proposal.
84.136	84.136	Changed from proposal to final rule for new incorporation by reference wording.
84.137	84.137	No change from proposal.
84.138	84.138	No change from proposal.
84.139	84.139	No change from proposal.
84.140	84.140	No change from proposal.

APPENDIX A TO PREAMBLE—COMPARISON OF FINAL RULE TO PROPOSED RULE—Continued

Proposed section	Final section	Change from proposal to final
84.141	84.141	Changed from proposal to final rule for new incorporation by reference wording.
84.142	84.142	No change from proposal.
84.143	84.143	No change from proposal.
84.144	84.144	No change from proposal.
84.145	84.145	No change from proposal.
84.146	84.146	No change from proposal.
84.147	84.147	No change from proposal.
84.148	84.148	No change from proposal.
84.149	84.159	No change from proposal.
84.150	84.150	No change from proposal.
84.151	84.151	No change from proposal.
84.152	84.152	No change from proposal.
84.153	84.153	No change from proposal.
84.154	84.154	No change from proposal.
84.155	84.155	No change from proposal.
84.156	84.156	No change from proposal.
84.157	84.157	No change from proposal.
84.158	84.158	No change from proposal.
84.159	84.159	No change from proposal.
84.160	84.160	No change from proposal.
84.161	84.161	No change from proposal.
84.162	84.162	No change from proposal.
84.163	84.163	No change from proposal.
84.170	84.170	1. Changed to limit requirements to non-powered air-purifying respirators. Added description of non-powered air-purifying respirator. 2. Changed classification from ''solid'' and ''liquid and solid'' to ''N-series, R-series, and P-series.'' 3. Changed efficiency level designations from A (99.97%), B(99%), and C (95%) to N100, R100, P100 (99.97%), N99, R99, P99(99%), N95, R95, and P95(95%).
84.171	84.171	Changed to limit requirements to non-powered air-purifying respirators.
84.172	84.172	No change from proposal.
84.173	84.173	No change from proposal.
84.174	84.174	No change from proposal.
84.175	84.175	No change from proposal.
84.176	84.176	No change from proposal.
84.177	84.177	No change from proposal.
84.178	84.178	No change from proposal.
84.179		Air velocity and noise levels for hoods and helmets is not included in final rule because these are applicable to powered air-purifying respirators only.
84.180	84.179	1. Changed to limit requirements to non-powered air-purifying respirators. 2. Changed classification from ''solid'' and ''liquid and solid'' to ''N-series, R-series, and P-series.'' 3. Changed efficiency level designations from A (99.97%), B(99%), and C (95%) to N100, R100, P100 (99.97%), N99, R99, P99(99%), N95, R95, and P95(95%). 4. Changed labelling from S and L&S (e.g., Type A/L&S) to series and efficiency level (e.g., P100 particulate filter (99.97% filter efficiency level)).
84.181		Isoamyl acetate tightness test for particulate respirators with filters not intended to be replaced is not included in the final rule to avoid confusion and complications in the certification process.
84.182		Isoamyl acetate tightness test for respirators with replaceable filters is not included in the final rule to avoid confusion and complications in the certification process.
84.183	84.180	1. Changed to increase initial inhalation resistance from 30 mm water-column height to 35 mm. 2. Changed to increase initial exhalation resistance from 20 mm water-column height to 25 mm.
84.184	84.181	1. Changed to limit requirements to non-powered air-purifying respirators. 2. Changed test terminology from filter penetration to filter efficiency. 3. Changed to reduce the number of tested units from 30 to 20. 4. Changed the test acceptance criterion from a statistical treatment of results to a pass/fail criterion. 5. Changed the tolerances for measurements to address testing consistency concerns. 6. Changed aerosol loading of tested filters to add the P-series test until there is no further decrease in efficiency. 7. Changed the description of dioctyl phthalate (DOP) aerosol to add a purity requirement. 8. Changed to require only N-series filters (formerly solid only) to be preconditioned before testing. The proposal required precondition of all filters before testing.
84.185		Powered particulate respirator flow requirements are not included in the final rule.
84.186	84.182	No change from proposal.
84.190	84.190	No change from proposal.
84.191	84.191	No change from proposal.
84.192	84.192	No change from proposal.
84.193	84.193	Changed from proposal to final rule for new incorporation by reference wording.
84.194	84.194	No change from proposal.
84.195	84.195	No change from proposal.
84.196	84.196	No change from proposal.
84.197	84.197	No change from proposal.
84.198	84.198	No change from proposal.
84.199	84.199	No change from proposal.

APPENDIX A TO PREAMBLE—COMPARISON OF FINAL RULE TO PROPOSED RULE—Continued

Proposed section	Final section	Change from proposal to final
84.200	84.200	No change from proposal.
84.201	84.201	No change from proposal.
84.202	84.202	No change from proposal.
84.203	84.203	No change from proposal.
84.204	84.204	No change from proposal.
84.205	84.205	No change from proposal.
84.206	84.206	No change from proposal.
84.207	84.207	No change from proposal.
84.250	84.250	No change from proposal.
84.251	84.251	No change from proposal.
84.252	84.252	No change from proposal.
84.253	84.253	No change from proposal.
84.254	84.254	No change from proposal.
84.255	84.255	No change from proposal.
84.256	84.256	No change from proposal.
84.257	84.257	No change from proposal.
84.258	84.258	No change from proposal.

Subpart KK (Dust, Fume, and Mist; Pesticide; Paint Spray; Powered Air-Purifying High Efficiency Respirators and Combination Gas Masks) has been added to the final rule to allow needed applications for extensions of approvals for dust/fume/mist respirators previously approved under 30 CFR Part 11. This subpart also includes the requirements for powered air-purifying respirators.

84.1100 Scope and effective dates.
84.1101 Definitions.
84.1102 Examination, inspection and testing of complete respirator assemblies; fees.
84.1103 Approval labels and markings; approval of contents; use.
84.1130 Respirators; description.
84.1131 Respirators; required components.
84.1132 Breathing tubes; minimum requirements.
84.1133 Harnesses; installation and construction; minimum requirements.
84.1134 Respirator containers; minimum requirements.
84.1135 Half-mask facepieces, full facepieces, hoods, helmets, and mouthpieces; fit; minimum requirements.
84.1136 Facepieces, hoods, and helmets; eyepieces; minimum requirements.
84.1137 Inhalation and exhalation valves; minimum requirements.
84.1138 Head harnesses; minimum requirements.
84.1139 Air velocity and noise levels; hoods and helmets; minimum requirements.
84.1140 Dust, fume, and mist respirators; performance requirements; general.
84.1141 Isoamyl acetate tightness test; dust, fume, and mist respirators designed for respiratory protection against fumes of various metals having an air contamination level not less than 0.05 milligram per cubic meter; minimum requirements.
84.1142 Isoamyl acetate tightness test; respirators designed for respiratory protection against dusts, fumes, and mists having an air contamination level less than 0.05 milligram per cubic meter, or against radionuclides; minimum requirements.
84.1143 Dust, fume, and mist air-purifying filter tests; performance requirements; general.
84.1144 Silica dust test for dust, fume, and mist respirators; single-use or reusable filters; minimum requirements.
84.1145 Silica dust test; non-powered single-use dust respirators; minimum requirements.
84.1146 Lead fume test for dust, fume, and mist respirators; minimum requirements.
84.1147 Silica mist test for dust, fume, and mist respirators; minimum requirements.
84.1148 Tests for respirators designed for respiratory protection against more than one type of dispersoid; minimum requirements.
84.1149 Airflow resistance tests; all dust, fume, and mist respirators; minimum requirements.
84.1150 Exhalation valve leakage test; minimum requirements.
84.1151 DOP filter test; respirators designed as respiratory protection against dusts, fumes, and mists having an air contamination level less than 0.05 milligram per cubic meter and against radionuclides; minimum requirements.
84.1152 Silica dust loading test; respirators designed as protection against dusts, fumes, and mists having an air contamination level less than 0.05 milligram per cubic meter and against radionuclides; minimum requirements.
84.1153 Dust, fume, mist, and smoke tests; canister bench tests; gas mask canisters containing filters; minimum requirements.
84.1154 Canister and cartridge requirements.
84.1155 Filters used with canisters and cartridges; location; placement.
84.1156 Pesticide respirators; performance requirements; general.
84.1157 Chemical cartridge respirators with particulate filters; performance requirements; general.
84.1158 Dust, fume, and mist tests; respirators with filters; minimum requirements; general.

[FR Doc. 95–13287 Filed 6–2–95; 12:10 pm]

BILLING CODE 4160–19–P

DEPARTMENT OF LABOR

Mine Safety and Health Administration

30 CFR Parts 11, 49, 56, 57, 58, 70, 72, 75

RIN 1219–AA85

Respiratory Protective Devices

AGENCY: Mine Safety and Health Administration, Labor.

ACTION: Final rule.

SUMMARY: This final rule, in conjunction with the National Institute for Occupational Safety and Health (NIOSH) final rule published concurrently in this **Federal Register**, transfers to NIOSH existing Mine Safety and Health Administration (MSHA) regulations pertaining to the testing, performance, and joint MSHA-NIOSH approval of respirators under the Mine Act. MSHA retains existing provisions related to the selection, use, and maintenance of respirators for coal and metal and nonmetal mines. Under the NIOSH rule, MSHA retains joint approval responsibility for certain mining-related respiratory protective devices. MSHA's transfer of the respirator approval program to NIOSH will more accurately reflect the respective roles of the two agencies in the approval of respirators. A memorandum of understanding (MOU) between MSHA and NIOSH delineates the roles of both agencies in the respirator approval program. This MOU is published elsewhere in this separate part of the **Federal Register**. MSHA's final rule will not affect the compliance responsibilities of mine operators.

EFFECTIVE DATE: This final rule is effective on July 10, 1995. The incorporation by reference of certain

publications listed in the regulations is approved by the Director of the **Federal Register** as of July 10, 1995.

FOR FURTHER INFORMATION CONTACT: Patricia W. Silvey, Director, Office of Standards, Regulations, and Variances, MSHA, 703–235–1910.

SUPPLEMENTARY INFORMATION:

I. Background

Until 1972, the U.S. Bureau of Mines (BOM) was solely responsible for testing and approving respirators. In 1972, BOM and NIOSH jointly published 30 CFR part 11 which replaced BOM's rules and procedures and delineated the responsibilities of the two agencies. Under these regulations, BOM evaluated respirator performance and NIOSH administered the quality control provisions. BOM also tested the intrinsic safety of electrical components of respirators intended for use in potentially explosive atmospheres in underground mines under the requirements of 30 CFR part 18.

A memorandum of understanding (MOU) between the two agencies, dated May 30, 1972, refined their respective roles. In 1973, 30 CFR part 11 was amended and NIOSH acquired primary responsibility for performance testing of respirators, although all approvals continued to be issued jointly. BOM retained its responsibility for testing the intrinsic safety of electrical components of respirators intended for use in underground gassy mines.

In 1974, the Mining Enforcement and Safety Administration (MESA), MSHA's predecessor agency, was created and BOM's responsibilities under 30 CFR were transferred to that agency. MESA continued to test the electrical components of certain respirators for intrinsic safety under 30 CFR part 18 and issue supplemental approvals permitting these components to be used in underground gassy mines.

When it was created in 1978, MSHA took over the responsibilities for respirator testing and approval which previously had been conducted by MESA. In addition, MSHA currently reviews applications for respirator approvals and has conducted some product evaluations, laboratory testing, and quality assurance product audits for certain respirators. The testing and approval activities specified by 30 CFR part 11 continue to be conducted primarily by NIOSH.

II. Discussion of Final Rule

A. General Discussion

MSHA is transferring the requirements for approval of respirators from 30 CFR part 11 to NIOSH, which is publishing the requirements elsewhere in this separate part of the **Federal Register** as a new 42 CFR part 84. To effectuate the transfer, MSHA is publishing this final rule removing 30 CFR part 11. NIOSH also is upgrading the testing requirements for particulate filters, which improve the current approach to evaluating the effectiveness of an air-purifying respirator's filter to remove toxic particulates from the ambient air. The new testing requirements for particulate filters update existing provisions to be consistent with two decades of advances in respiratory protection technology.

Under 42 CFR part 84, MSHA and NIOSH will continue to review and jointly approve respirators for mine rescue and other mine emergencies and their associated service-life plans and users manuals. These respirators include devices such as filter self-rescuers (FSR), self-contained self-rescuers (SCSR), mine rescue apparatus (long duration, closed and open circuit devices), and other self-contained breathing apparatus (SCBA). Retention of joint approval under the NIOSH final rule preserves MSHA's role in the approval of certain respirators whose use in mines is an important part of safeguarding the health and safety of miners. In addition, MSHA will continue to test the intrinsic safety of electrical components of respirators to be used in underground coal mines and underground gassy metal and nonmetal mines and issue a separate MSHA approval under 30 CFR part 18 for such respirator components.

To facilitate implementing this rule, NIOSH and MSHA have developed a new MOU which delineates the roles of both agencies in the respirator approval program. For example, the MOU establishes procedures to be followed by both agencies for joint approval of respirators used for mine rescue and other mine emergencies; it establishes guidelines for consultation and exchange of information between MSHA and NIOSH with respect to issues dealing with respirator approval and related matters; and it provides that NIOSH and MSHA notify each other immediately of field complaints and identified deficiencies concerning approved respirators.

MSHA and NIOSH have coordinated their rulemaking activities to ensure that the level of protection provided miners and other affected workers by the existing standards will not be lessened. In particular, all technical data and commenter information have been shared by the respective agencies.

B. Comments to MSHA's Proposed Rule

MSHA received few comments from the mining community and the public. Most comments were addressed to NIOSH. Generally, comments to MSHA supported the transfer of the respirator approval program to NIOSH. One commenter explained that the transfer and redesignation would enhance accountability for regulatory actions, improve and expedite the approval process, and consolidate responsibility in one agency. This same commenter requested an opportunity to participate in the development of the MOU to ensure that MSHA retains a strong role with regard to mine-specific respiratory devices because of MSHA's expertise in the field. A commenter to NIOSH also expressed concern that MSHA's role would be diminished under the transfer and asked to participate in the development of the MOU.

MSHA and NIOSH have concluded that the MOU is most appropriately developed by the two agencies because it is an administrative tool to delineate their respective roles. The MOU does not impose any additional obligations on the mining industry. Recognizing the concerns of commenters, however, the MOU carefully details how MSHA will continue to have a strong role with respect to respiratory protective devices used in the mining industry.

A commenter requested that MSHA incorporate by reference the most recent American National Standards Institute (ANSI) standard for respiratory protective devices, ''ANSI Z88.2–1992,'' in the recodification of §§ 11.2–1 and 11.4 which incorporate by reference ANSI Z88.2–1969 ''Practices for Respiratory Protection.'' ANSI Z88.2 addresses respiratory protection programs which include the selection, fit, use, and maintenance of respirators. The 1992 ANSI standard differs substantively from the 1969 ANSI standard. Incorporating by reference the 1992 ANSI standard is beyond the scope of this rulemaking which addresses the administrative transfer of the respirator approval program to NIOSH and, as discussed below, the nonsubstantive recodification of §§ 11.2–1 and 11.4. Although ANSI Z88.2–1969 is retained in this final rule, MSHA currently is addressing respiratory protection programs in its air quality rulemaking.

C. Other Sections Affected

The final rule removes 30 CFR part 11; however, it retains those provisions which relate to the selection, use, and maintenance of respirators. Section 11.2(a) requires the use of approved respirators and the maintenance of such

respirators in an approved condition. As discussed previously, §§ 11.2–1 and 11.4 require the selection, fitting, use, and maintenance of respirators in accordance with ANSI Z88.2. Because these provisions are use-related, as opposed to approval-related, MSHA addresses them in separate standards for the use of respirators. MSHA had proposed that these provisions be recodified in 30 CFR parts 70 and 71. Instead, MSHA is recodifying these provisions in 30 CFR part 72, ''Health Standards for Coal Mines'' to ease understanding and eliminate duplication. This final rule does not change the requirements for metal and nonmetal mines in 30 CFR 56/57.5005 which already reference ANSI Z88.2–1969.

This final rule makes conforming, nonsubstantive editorial and nomenclature revisions to standards in title 30 that reference the use of respirators approved under 30 CFR part 11 to reflect the transfer of those standards to 42 CFR part 84. These revisions do not change the compliance responsibility of mine operators who continue to be required to provide miners with ''approved'' respirators.

D. Grandfathering of Respirators Approved Under 30 CFR Part 11

Approvals issued under 30 CFR part 11 for all respirators, except particulate filter respirators, will be unaffected by 42 CFR part 84. For 3 years from July 10, 1995, NIOSH will continue to authorize manufacturers to sell, as MSHA–NIOSH ''approved'' devices, particulate filter respirators which had been approved under 30 CFR part 11. This will allow adequate time for manufacturers to convert to production of respirators meeting the new particulate filter requirements of 42 CFR part 84. Until supplies of particulate filter respirators which had been approved under 30 CFR part 11 are depleted, MSHA will allow their use as ''approved'' devices.

As discussed in the preamble to 42 CFR part 84, applications for approval or extensions of approval received prior to the effective date of 42 CFR part 84 will be processed under the requirements of 30 CFR part 11. Applications for approval or extensions of approval received on or after the effective date of 42 CFR part 84 will be processed under the provisions of 42 CFR part 84. For additional information on the transition from 30 CFR part 11 to 42 CFR part 84, see the NIOSH final rule published elsewhere in this separate part of the **Federal Register**.

The new 42 CFR part 84 does not include the provisions of 30 CFR 11.2(b) which allowed gas masks approved under the former BOM Schedule 14F (dated April 23, 1955) to continue to be accepted as ''approved'' devices for use in hazardous atmospheres. MSHA's experience indicates that few of these 14F gas masks currently are sold or used. As indicated in the preamble to 42 CFR part 84, published elsewhere in this separate part of the **Federal Register**, the approval records on these BOM-approved respirators no longer exist and, therefore, NIOSH has no way of monitoring their production to ensure that they continue to meet the approved design. Thus, the removal of the provisions in 30 CFR 11.2(b) removes the authority to continue marketing these respirators as ''approved'' devices.

III. Executive Order 12866 and Regulatory Flexibility Act

This is not a significant rule under Executive Order 12866. In addition, this rule does not have a significant economic impact on a substantial number of small entities as it only removes the regulations in 30 CFR part 11; retains certain responsibilities for the use of respirators in mining; and makes nonsubstantive revisions. The Agency, therefore, has not prepared a regulatory flexibility analysis.

IV. Paperwork Reduction Act

The recordkeeping and reporting requirements in 30 CFR part 11 have been transferred to 42 CFR part 84.

List of Subjects

30 CFR Part 11

Administrative practice and procedure, Mine safety and health, Pesticides and pests, Reporting and recordkeeping requirements.

30 CFR Parts 49, 56, 57, 58, 70, and 75

Mine safety and health, Personal protective equipment, Reporting and recordkeeping requirements, Respirators.

30 CFR Part 72

Coal, Incorporation by reference, Mine safety and health, Personal protective equipment, Respirators.

For the reasons set out in the preamble and under the authority of 30 U.S.C. 957, 30 CFR chapter I is amended as follows.

§§ 11.2–1 and 11.4 [Redesignated as § 72.710]

1. Sections 11.2–1 and 11.4 are redesignated as § 72.710, paragraphs (a) and (b) respectively, in subpart E of part 72.

PART 11—[REMOVED]

2. Part 11 is removed.

PART 49—[AMENDED]

3. The authority citation for part 49 is revised to read as follows:

Authority: 30 U.S.C. 811, 825(e), 957.

4. Section 49.6 is amended by revising paragraph (a)(1) to read as follows:

§ 49.6 Equipment and maintenance requirements.

(a) * * *

(1) Twelve self-contained oxygen breathing apparatus, each with a minimum of 2 hours capacity (approved by MSHA and NIOSH under 42 CFR part 84, subpart H), and any necessary equipment for testing such breathing apparatus;

* * * * *

PART 56—[AMENDED]

5. The authority citation for part 56 is revised to read as follows:

Authority: 30 U.S.C. 811, 957, 961.

6. Section 56.5005 is amended by revising paragraph (a) to read as follows:

§ 56.5005 Control of exposure to airborne contaminants.

* * * * *

(a) Respirators approved by NIOSH under 42 CFR part 84 which are applicable and suitable for the purpose intended shall be furnished and miners shall use the protective equipment in accordance with training and instruction.

* * * * *

PART 57—[AMENDED]

7. The authority citation for part 57 is revised to read as follows:

Authority: 30 U.S.C. 811, 957, 961.

8. Section 57.5005 is amended by revising paragraph (a) to read as follows:

§ 57.5005 Control of exposure to airborne contaminants.

* * * * *

(a) Respirators approved by NIOSH under 42 CFR part 84 which are applicable and suitable for the purpose intended shall be furnished and miners shall use the protective equipment in accordance with training and instruction.

* * * * *

9. Section 57.5044 is revised to read as follows:

§ 57.5044 Respirators.

In environments exceeding 1.0 WL, miners shall wear respirators approved

by NIOSH for radon daughters prior to July 10, 1995 or under the equivalent section of 42 CFR part 84 and such respirator use shall be in compliance with § 57.5005.

10. Section 57.15030 is revised to read as follows:

§ 57.15030 Provision and maintenance of self-rescue devices.

A 1-hour self-rescue device approved by MSHA and NIOSH under 42 CFR part 84 shall be made available by the operator to all personnel underground. Each operator shall maintain self-rescue devices in good condition.

11. Section 57.22315 is amended by revising the second sentence to read as follows:

§ 57.22315 Self-contained breathing apparatus (V–A mines).

* * * Such apparatus shall be approved by MSHA and NIOSH under 42 CFR part 84 and shall be maintained in accordance with manufacturers' specifications. * * *

PART 58—[AMENDED]

12. The authority citation for part 58 is revised to read as follows:

Authority: 30 U.S.C. 811, 957, 961.

13. Section 58.610 is amended by revising paragraph (a) to read as follows:

§ 58.610 Abrasive blasting.

(a) *Surface and underground mines.* When an abrasive blasting operation is performed, all exposed miners shall use in accordance with 30 CFR 56.5005 or 57.5005 respirators approved for abrasive blasting by NIOSH under 42 CFR part 84, or the operation shall be performed in a totally enclosed device with the miner outside the device.

* * * * *

PART 70—[AMENDED]

14. The authority citation for part 70 is revised to read as follows:

Authority: 30 U.S.C. 811, 813(h), 957, 961.

15. Section 70.300 is revised to read as follows:

§ 70.300 Respiratory equipment; respirable dust.

Respiratory equipment approved by NIOSH under 42 CFR part 84 shall be made available to all persons whenever exposed to concentrations of respirable dust in excess of the levels required to be maintained under this part. Use of respirators shall not be substituted for environmental control measures in the active workings. Each operator shall maintain a supply of respiratory equipment adequate to deal with occurrences of concentrations of respirable dust in the mine atmosphere in excess of the levels required to be maintained under this part.

§ 70.300–1 [Removed]

16. Section 70.300–1 is removed.

17. Section 70.305 is revised to read as follows:

§ 70.305 Respiratory equipment; gas, dusts, fumes, or mists.

Respiratory equipment approved by NIOSH under 42 CFR part 84 shall be provided to persons exposed for short periods to inhalation hazards from gas, dusts, fumes, or mist. When the exposure is for prolonged periods, other measures to protect such persons or to reduce the hazard shall be taken.

§ 70.305–1 [Removed]

18. Section 70.305–1 is removed.

PART 72—[AMENDED]

19. The authority citation for part 72 is revised to read as follows:

Authority: 30 U.S.C. 811, 813(h), 957, 961.

20. Section 72.610 is amended by revising paragraph (a) to read as follows:

§ 72.610 Abrasive blasting.

(a) *Surface and underground mines.* When an abrasive blasting operation is performed, all exposed miners shall properly use respirators approved for abrasive blasting by NIOSH under 42 CFR part 84, or the operation shall be performed in a totally enclosed device with the miner outside the device.

* * * * *

21. Newly redesignated § 72.710 is revised to read as follows:

§ 72.710 Selection, fit, use, and maintenance of approved respirators.

In order to ensure the maximum amount of respiratory protection, approved respirators shall be selected, fitted, used, and maintained in accordance with the provisions of the American National Standards Institute's ''Practices for Respiratory Protection ANSI Z88.2–1969,'' which is hereby incorporated by reference. This publication may be obtained from the American National Standards Institute, Inc., 1430 Broadway, New York, NY 10018, and may be inspected at any Coal Mine Health and Safety district and subdistrict office, or at MSHA's Office of Standards, 4015 Wilson Boulevard, Arlington, VA, and at the Office of the Federal Register, 800 North Capitol Street, NW., suite 700, Washington, DC. This incorporation by reference was approved by the Director of the Federal Register in accordance with 5 U.S.C. 552(a) and 1 CFR part 51.

PART 75—[AMENDED]

22. The authority citation for part 75 is revised to read as follows:

Authority: 30 U.S.C. 811, 957, 961.

23. Section 75.2 is amended by adding the following definitions in alphabetical order to read as follows:

§ 75.2 Definitions.

* * * * *

Filter Self-Rescuer (FSR). A type of gas mask approved by MSHA and NIOSH under 42 CFR part 84 for escape only from underground mines and which provides at least 1 hour of protection against carbon monoxide.

* * * * *

Self-Contained Self-Rescuer (SCSR). A type of closed-circuit, self-contained breathing apparatus approved by MSHA and NIOSH under 42 CFR part 84 for escape only from underground mines.

* * * * *

24. Section 75.1714 is amended by revising paragraph (a) to read as follows:

§ 75.1714 Availability of approved self-rescue devices; instruction in use and location.

(a) Each operator shall make available to each miner who goes underground, and to visitors authorized to enter the mine by the operator, an approved self-rescue device or devices which is adequate to protect such person for 1 hour or longer.

* * * * *

25. Section 75.1714–1 is revised to read as follows:

§ 75.1714–1 Approved self-rescue devices.

The requirements of § 75.1714 shall be met by making available to each person referred to in that section a self-rescue device or devices, which have been approved by MSHA and NIOSH under 42 CFR part 84, as follows:

(a) A 1-hour SCSR;

(b) A SCSR of not less than 10 minutes and a 1-hour canister; or

(c) Any other self-contained breathing apparatus which provides protection for a period of 1 hour or longer and which is approved for use by MSHA as a self-rescue device when used and maintained as prescribed by MSHA.

26. Section 75.1714–2 is amended by revising the introductory text of paragraph (e), the introductory text of paragraph (e)(1), paragraphs (e)(1)(v), (e)(2), (e)(3), (f), and the introductory text of paragraph (g) to read as follows:

§ 75.1714–2 Self-rescue devices; use and location requirements.

* * * * *

(e) A mine operator may apply to the District Manager under § 75.1101–23 for

permission to place the SCSR more than 25 feet away.

(1) The District Manager shall consider the following factors in deciding whether to permit an operator to place a SCSR more than 25 feet from a miner:

* * * * *

(v) Proposed location of SCSRs,

* * * * *

(2) Such application shall not be approved by the District Manager unless it provides that, while underground, all miners whose SCSR is more than 25 feet away shall have a FSR approved by MSHA and NIOSH under 42 CFR part 84 sufficient to enable each miner to get to a SCSR.

(3) An operator may not obtain permission under paragraph (e) of this section to place SCSRs more than 25 feet away from miners on trips into and out of the mine.

(f) If a SCSR is not carried out of the mine at the end of a miner's shift, the place of storage must be approved by the District Manager, a sign with the word ''SELF-RESCUER'' or ''SELF-RESCUERS'' shall be conspicuously posted at each storage place, and direction signs shall be posted leading to each storage place.

(g) Where devices of not less than 10 minutes and 1 hour are made available in accordance with § 75.1714–1(b), such devices shall be used and located as follows:

* * * * *

27. Section 75.1714–3 is amended by revising paragraphs (c) and (d) to read as follows:

§ 75.1714–3 Self-rescue devices; inspection, testing, maintenance, repair, and recordkeeping.

* * * * *

(c) All FSRs approved by MSHA and NIOSH under 42 CFR part 84, except devices using vacuum containers as the only method of sealing, shall be tested at intervals not exceeding 90 days by weighing each device on a scale or balance accurate to within +1 gram. A device that weighs more than 10 grams over its original weight shall be removed from service.

(d) All SCSRs approved by MSHA and NIOSH under 42 CFR part 84 shall be tested in accordance with instructions approved by MSHA and NIOSH. Any device which does not meet the specified test requirements shall be removed from service.

* * * * *

Dated: May 24, 1995.

J. Davitt McAteer,

Assistant Secretary for Mine Safety and Health.

[FR Doc. 95–13286 Filed 6–7–95; 12:10 pm]

BILLING CODE 4510–43–P

DEPARTMENT OF LABOR

Mine Safety and Health Administration

DEPARTMENT OF HEALTH AND HUMAN SERVICES

Centers for Disease Control and Prevention

Memorandum of Understanding Between the Mine Safety and Health Administration and the National Institute for Occupational Safety and Health Regarding the Respirator Approval Program

AGENCY: Mine Safety and Health Administration, Labor and National Institute for Occupational Safety and Health, CDC, HHS.

ACTION: Notice.

SUMMARY: This notice is to advise the public of the issuance of a memorandum of understanding (MOU) between the Mine Safety and Health Administration (MSHA), U.S. Department of Labor, and the National Institute for Occupational Safety and Health (NIOSH), Centers for Disease Control, U.S. Department of Health and Human Services. This MOU delineates the roles of both agencies in a new respirator approval program under the provisions of 42 CFR part 84. Concurrently, MSHA is removing 30 CFR part 11 which contained the provisions of the existing respirator approval program. Both the MSHA and NIOSH final rules are published elsewhere in this separate part of the **Federal Register**.

DATES: This MOU will become operative on July 10, 1995.

FOR FURTHER INFORMATION CONTACT: Peter M. Turcic, Chief, MSHA Approval and Certification Center, 304–547–2029, or Richard W. Metzler, Chief, Certification and Quality Assurance Branch, NIOSH Division of Safety Research, 304–285–5907.

SUPPLEMENTARY INFORMATION: On December 10, 1984, MSHA and NIOSH entered into an agreement for consultation, coordination, and cooperation in effectively and efficiently carrying out their respective safety and health functions under the Federal Mine Safety and Health Act of 1977. This MOU supplements the 1984 agreement and, to the extent inconsistent with that agreement, supersedes it. This MOU is being published concurrently with the MSHA and NIOSH final rules addressing the approval of respirators to aid in understanding these rulemakings.

Dated: May 24, 1995.

J. Davitt McAteer,

Assistant Secretary for Mine Safety and Health, U.S. Department of Labor.

Dated: May 24, 1995.

Linda Rosenstock,

Director, National Institute for Occupational Safety and Health, Centers for Disease Control and Prevention, U.S. Department of Health and Human Services.

Memorandum of Understanding Between the Mine Safety and Health Administration and the National Institute for Occupational Safety and Health

I. Introduction

A. Background

The Federal Mine Safety and Health Act of 1977 (Mine Act) provides for the protection of the health and safety of our Nation's miners. In furtherance of the goals of the Mine Act, the Secretaries of Health and Human Services (HHS) and Labor coordinate their expertise and activities in the field of mine health and safety. This Memorandum of Understanding (MOU) sets out the procedures to be followed by the Secretaries in coordinating their responsibilities with respect to the joint approval of respirators.

On May 4, 1978, the National Institute for Occupational Safety and Health (NIOSH) of the Department of Health, Education and Welfare, predecessor to HHS, entered into an Agreement with the Mine Safety and Health Administration (MSHA), Department of Labor, to ensure full and effective use of the capabilities and resources of NIOSH and MSHA to assist in planning research and to provide the maximum utilization of technological developments resulting from mine health and safety research. That Agreement was revised on December 10, 1984. This Memorandum of Understanding (MOU) supplements the above mentioned Agreements and, to the extent inconsistent with those Agreements, supersedes them.

B. Purpose

The purpose of this MOU is to establish procedures to be followed by MSHA and NIOSH in exercising their respective responsibilities for joint approval of certain respirators under the provisions of 42 CFR Part 84. It also establishes guidelines for interaction between MSHA and NIOSH with respect to issues dealing with respirator certification and related matters. These issues include but are not limited to: certification, quality assurance, and field complaints.

C. Authority

This MOU is consistent with, and is entered into under the authority of, the Mine Act.

II. Joint Approval of Respirators Used for Mine Rescue and Other Mine Emergencies

A. Respirators Subject to Joint Approval

1. NIOSH will conduct the examinations, inspections and tests of respirators submitted for certification pursuant to the requirements of 42 CFR Part 84.

2. Except for those respirators used for mine rescue and other mine emergencies, NIOSH is solely responsible to evaluate and certify respirators under the provisions of 42 CFR part 84.

3. MSHA and NIOSH will jointly evaluate respirators used for mine rescue and other mine emergencies and subsequently issue a joint certification of approval for such respirators.

4. Respirators used for mine rescue and other mine emergencies include filter self-rescuers (FSRS), self-contained self-rescuers (SCSR), mine rescue apparatus (long duration, closed and open circuit devices), and other self-contained breathing apparatus (SCBA). In the event a new class of respirator is submitted for certification, NIOSH will consult with MSHA concerning the potential for mine use and the need for joint approval.

5. In the event of disagreement as to whether a particular class of respirator is used for mine rescue and other mine emergencies, MSHA will make a final determination.

B. Preapproval Procedures

Prior to MSHA/NIOSH joint approval of respirators used for mine rescue and other mine emergencies, the following procedures will be followed to assist in the determination of whether a candidate respirator has fulfilled the applicable requirements of 42 CFR part 84:

1. MSHA and NIOSH will provide such consultation and assistance to each other as necessary to assure the proper joint approval of respirators and fulfill the intent of 42 CFR Part 84.

2. MSHA will, by mutual agreement with NIOSH, provide subjects for NIOSH testing of jointly approved respirators in accordance with the pertinent requirements of 45 CFR Part 46 and the Human Subject Review Board.

3. As coequals in the joint approval of respirators used for mine rescue and other mine emergencies, MSHA and NIOSH will share access to all examinations, inspections, tests, evaluations and other pertinent information leading to the certification of such respirators.

4. MSHA and NIOSH will jointly evaluate the respirator service life plans and user's manuals for jointly approved respirators.

5. MSHA and NIOSH will jointly establish any limitations to be required for jointly approved respirators.

C. Joint Approval

1. NIOSH will conduct all examinations, inspections and tests of respirators pursuant to the requirements of 42 CFR Part 84.

2. NIOSH and MSHA will jointly determine whether a candidate respirator intended for mine rescue and other mine emergencies has fulfilled the requirements of 42 CFR Part 84. Upon such determination, NIOSH and MSHA will issue a joint respirator approval, which shall include appropriate use limitations.

3. NIOSH and MSHA shall sign the approval certificate and each Agency shall maintain timely processing procedures.

III. Quality Assurance

1. NIOSH and MSHA will notify each other in advance of the intent to conduct audits of respirators and/or manufacturing sites for

jointly approved respirators and will invite joint participation in such activities. Care will be taken to prevent duplication or repetition of audit activities.

2. The results of NIOSH or MSHA audits of jointly approved respirators will be shared immediately with the other Agency through established procedures.

3. Discrepancies or nonconformances identified in audits of jointly approved respirators and/or manufacturing sites for jointly approved respirators will be resolved jointly by MSHA and NIOSH.

4. NIOSH will notify MSHA of all respirator discrepancies and nonconformances identified with any respirator bearing the NIOSH certification. If MSHA determines that the respirator in question has significant mine use, MSHA will consult with NIOSH and jointly participate in resolution of mine use problems.

IV. Post-Approval Complaints

1. Reports of discrepancies or nonconformances involving jointly approved respirators will be shared immediately between the two agencies and investigations of such discrepancies and nonconformances will be jointly conducted by NIOSH and MSHA.

2. MSHA and NIOSH will jointly participate in the planning and resolution of complaints involving MSHA/NIOSH approved respirators. Such joint participation will include all activities related to product retrofit, recalls, stop sale notices, user notices, and revocation of prior certifications.

3. MSHA and NIOSH will promptly notify each other of respirator field complaints received by either Agency. MSHA will participate with NIOSH in resolution of such complaints only if MSHA determines that the cause of the complaint or its resolution has an impact on the mining industry.

V. Respirators With Electrical Components

1. Respirators having electrical components and intended for use in mines where methane may be present must be permissible and are subject to the requirements of 30 CFR Part 18. These respirators will be approved for permissibility solely by MSHA. MSHA will independently conduct the examinations, inspections and tests of respirators submitted for certification pursuant to the requirements of 30 CFR Part 18. NIOSH will provide consultation as requested by MSHA.

2. MSHA will independently conduct audits, nonconformance investigations, and resolve nonconformances associated with the electrical components of respirators approved in accordance with 30 CFR Part 18 requirements. A report of all such audit results will be promptly provided to NIOSH by MSHA.

3. MSHA will notify NIOSH in advance of the intent to audit Part 18 respirators. Care will be taken to coordinate audit activities and prevent duplication or unnecessary repetition of audit efforts.

VI. Administration

This MOU will be administered on behalf of MSHA by the Chief, Approval and Certification Center or by such other representative as the Assistant Secretary for Mine Safety and Health designates in writing to NIOSH.

This MOU will be administered on behalf of NIOSH by the Chief, Certification and Quality Assurance Branch or by such other representative as the Director of NIOSH designates in writing to MSHA.

VII. Effective Date, Amendment and Termination

This MOU will become operative on the effective date of 42 CFR part 84 and upon execution of this MOU by both parties. It may be modified or terminated only upon written agreement executed by both parties.

Dated: May 4, 1995.

J. Davitt McAteer,

Assistant Secretary for Mine Safety and Health, U.S. Department of Labor.

Dated: May 4, 1995.

Linda Rosenstock,

Director, National Institute for Occupational Safety and Health, U.S. Department of Health and Human Services.

[FR Doc. 95–13288 Filed 6–2–95; 12:10 pm]

BILLING CODE 4510–43–M

federal register

Thursday
June 8, 1995

Part III

Federal Trade Commission

16 CFR Part 310

Telemarketing Sales Rule; Proposed Rule

FEDERAL TRADE COMMISSION

16 CFR Part 310

Telemarketing Sales Rule

AGENCY: Federal Trade Commission.

ACTION: Revised notice of proposed rulemaking.

SUMMARY: In this document, the Federal Trade Commission (''FTC'' or ''Commission'') issues a revised notice of proposed rulemaking to implement the Telemarketing and Consumer Fraud and Abuse Prevention Act (''Telemarketing Act'' or ''the Act''). Section 3 of that Act directs the FTC to prescribe rules, within 365 days of enactment of the Act, prohibiting deceptive telemarketing acts or practices and other abusive telemarketing acts or practices.

DATES: Written comments must be submitted on or before June 30, 1995. Due to the time constraints of this rulemaking proceeding, the Commission does not contemplate any extensions of this comment period or any additional periods for written comment or rebuttal comment.

ADDRESSES: Six paper copies of each written comment should be submitted to the Office of the Secretary, Room 159, Federal Trade Commission, Washington, D.C. 20580. To encourage prompt and efficient review and dissemination of the comments to the public, all comments also should be submitted, if possible, in electronic form, on either a 5¼ or a 3½ inch computer disk, with a label on the disk stating the name of the commenter and the name and version of the word processing program used to create the document. (Programs based on DOS are preferred. Files from other operating systems should be submitted in ASCII text format to be accepted.) Individuals filing comments need not submit multiple copies of comments in electronic form. Submissions should be captioned: ''Proposed Telemarketing Sales Rule,'' FTC File No. R411001.

FOR FURTHER INFORMATION CONTACT: Judith M. Nixon, (202) 326–3173, or David M. Torok, (202) 326–3140, Division of Marketing Practices, Bureau of Consumer Protection, Federal Trade Commission, Washington, D.C. 20580.

SUPPLEMENTARY INFORMATION:

Section A. Background

On August 16, 1994, the President signed into law the Telemarketing Act,[1] which directs the Commission to prescribe rules, within 365 days of enactment of the Act, prohibiting deceptive and abusive telemarketing acts or practices. The Commission published a notice of proposed rulemaking (''NPR'') in the **Federal Register** on February 14, 1995.[2]

In response to the NPR, the Commission received over 300 comments from industry, law enforcement and consumer representatives, as well as from individual consumers and businesses.[3] In general, consumers commented that the initially proposed Rule did not go far enough to stop unwanted telemarketing calls. Law enforcement officials uniformly praised the Commission's proposal for its thorough and useful treatment of the various means employed by fraudulent telemarketers to get consumers' money through deception or abuse. Finally, most industry representatives generally maintained that the initially proposed Rule unnecessarily burdened legitimate businesses, adding needless costs through overbroad proposals that failed to aim specifically at deceptive and abusive telemarketing practices.

Between April 18 and 20, 1995, staff of the Commission conducted a public workshop conference in Chicago, Illinois. Twenty associations or individual businesses, each with an affected interest and ability to represent others with similar interests, were selected to engage in a roundtable discussion.[4] Howard Bellman served as the conference facilitator. Participants discussed various aspects of the initially proposed Rule, addressed each other's comments and questions, and responded to questions from Commission staff members. The conference was open to the public, and more than 150 observers attended. Oral comments from members of the public were invited each day, and 37 individuals spoke during the course of the three-day conference. The entire proceeding was transcribed, and the transcript was placed on the public record.[5]

On May 3, 1995, Commission staff briefed all the Commissioners, in an open meeting, about the rulemaking process, the issues raised in the written comments and the public workshop, and stated possible approaches to address the issues commenters raised. The briefing was transcribed and the transcript was placed on the public record. The entire public record to date, including the comments, the conference transcript, and the Commission open briefing transcript is available on CD–ROM and has been placed on the Internet.[6]

Based on the Act's legislative history, the written comments received, and the information learned at the workshop conference, the Commission has decided to modify its regulatory approach in this revised proposed Rule. The Commission believes this modification is necessary to effectuate appropriately Congress' directive that the FTC in its rulemaking ''develop criteria of behavior'' and ''issue a * * * rule [that is] flexible enough to encompass the changing nature of [deceptive] activity, while at the same time providing telemarketers with guidance as to the general nature of the prohibited conduct.''[7] The Commission's revised approach addresses many commenters' concerns that the initially proposed Rule cast too broad a net and imposed unnecessary burdens on the legitimate telemarketing industry without adequately focussing on deceptive and abusive telemarketing practices. Additionally, the revised proposed Rule addresses law enforcement concerns that the Rule needs to provide enough enforcement flexibility to reach deceptive and abusive telemarketing acts or practices currently unknown. The Commission believes additional public comment on a revised proposal will assist in producing a final Rule that most effectively prohibits deceptive and abusive telemarketing practices, while not unduly burdening legitimate businesses.

Section B of this notice discusses, on a section-by-section basis, the Commission's revised proposed Rule.

Appendix

List of Commenters and Acronyms

Acronym and Commenter

ADS ADS Teleservices
ADVANTA Advanta Corp.
ALIC Allstate Life Insurance Co.
AMCI Allstate Motor Club., Inc.
A-MARK A-Mark Precious Metals, Inc.
AAF American Advertising Federation

[1] 15 U.S.C. 6101–08.

[2] 60 FR 8313–33.

[3] A list of the commenters, and the acronyms which will be used to identify each commenter in this notice, is appended to Section A of this notice.

[4] The selected participants were: AARP, ATA, ATFA, APAC, ANA, DMA, DSA—Nev., DSA, EMA, ISA, ICTA, MPA, Monex, NAAG, NACAA, NAPA, NCL, NRF, PMAA, and USPS.

[5] References to the conference transcript are cited as ''Tr.'' followed by the appropriate page designation. References to comments are cited as ''[acronym of commenter] at [page number].''

[6] The FTC gopher server address is CONSUMER.FTC.GOV 2416. For World Wide Web access, the URL is GOPHER:// CONSUMER.FTC.GOV:2416.

[7] H. R. Rep. No. 20, 103rd Cong., 1st Sess. 8; S. Rep. No. 80, 103rd Cong., 1st Sess. 9 (hereinafter referred to as ''House Report'' and ''Senate Report,'' respectively).

AAAA American Association of Advertising Agencies, Inc.
AARP American Association of Retired Persons
ABA American Bankers Association
ACRA American Car Rental Association
ACA American Cemetery Association
ADC American Distributing Company
AMEX American Express Company
AFSA American Financial Services Association
AIG American Impact Group
APN American Publishers Network, Inc.
ARDA American Resort Development Association
ASAE American Society of Association Executives
ASTA American Society of Travel Agents
ATA American Telemarketing Association
ATFA American Telephone Fundraisers Association
AWMI American West Marketing, Inc.—Barry Engels
AWMI American West Marketing, Inc.—Sandra Sawyer
AMERINET AmeriNet, Inc.
ANDREWS Andrews Satellite & Home Theater
ANN ARBOR Ann Arbor News
APAC APAC TeleServices
ABI Archbold Buckeye, Inc.
AMOC Arizona Mail Order Company, Inc.
ARA Arizona Retailers Association
A&H Arter & Hadden
ACB Associated Credit Bureaus, Inc.
AAP Association of American Publishers
AITS Association of Independent Television Stations, Inc.
ANA Association of National Advertisers
ATLANTA Atlanta Journal & Atlanta Constitution
AT&T AT&T Corp.
AUTOSCRIBE AutoScribe Corporation
BAGGS Baggs, Andrew
BAGWELL Bagwell, Linda L.
BOB Bank of Boston
BAY CITY Bay City Times
BELLEVILLE Belleville News-Democrat
BMCA Beneficial Management Corporation of America
BNC Birmingham News Company
BRADLEY Bradley, MJP
BRANTLEY Brantley, Lamar
BREWSTER Brewster, The Honorable Bill K.
BFC Brown Forman Corporation
BPIA Business Products Industry Association
SAMPLER Business Sampler Advertising, Inc.
BSA Business Software Alliance
CAPITAL Capital Press
CAPUTO Caputo, Harriet Q.
CCA Career College Association
CME Center for Media Education
CHASE Chase Manhattan Bank (USA)
CHEMICAL Chemical Bank
CHERNIKOFF Chernikoff, J.D.
CDI Circulation Development, Inc
CITICORP Citicorp/Citibank
COALITION ''Coalition''—various companies
CPA Colorado Press Association
CHC Columbia House Company
COMCAST Comcast Corporation/Jones Intercable
CA Commercial Appeal
CBA Consumer Bankers Association
CFA Consumer Federation of America
CONWAY Conway National Bank
CORNELL Cornell Group
CMOR Council for Marketing and Opinion Research
COX Cox Newspapers, Inc.
CRILLY Crilly, Thomas W.
CUCI CUC International
DCR Daily Court Review
DAILY NEWS Daily News
DMBE Department of Marketing and Business Environment, Florida International University
DMI DialAmerica Marketing, Inc.
DMT&H Dickinson, Mackaman, Tyler & Hagan, P.C.
DW&Z Dierman, Wortley & Zola, Inc.
DSA-NEV. Direct Sales Association of Nevada
DSI Direct Sales International (2 copies of letter, 1 of comment)
DMA Direct Marketing Association
DMSI Direct Marketing Services, Inc.
DSA Direct Selling Association
DIVERSIFIED Diversified Marketing Service, Inc.
DONREY Donrey Media Group
DOUBLEDAY Doubleday Book & Music
DOW JONES Dow Jones & Co., Inc.
OREGONIAN East Oregonian
BAUER Eddie Bauer, Inc.
EDMUND Edmund Scientific Company
EMA Electronic Messaging Association
EMMONS Emmons, Ethel B.
EQUIFAX Equifax Credit Information Services, Inc.
EHRLICH Ehrlich, The Honorable Robert L., Jr.
ERIE Erie Construction Mid-West, Inc.
ERNST Ernst, Michael
F&W F&W Publications
FedEx Federal Express
FRB Federal Reserve Banks
FRB–SF Federal Reserve Bank of San Francisco
FINGERHUT The Fingerhut Companies
FLINT Flint Journal
FORNEY Forney Messenger Inc.
FRANKLIN Franklin Mint
GABRIEL Gabriel, Mrs. Harry J., Jr.
GANNET Gannett Co., Inc.
GE GE Appliances
GA OCA Georgia Office of Consumer Affairs
GRA Georgia Retail Association
GIBSON Gibson, Stewart & Jean
GGP Gift Gallery Promotions
GCM Good Cents Marketing
GREENE Greene, Russ
GRIDER Grider, Felicia
GROLIER Grolier TeleMarketing, Inc.
GHA Group Health Association of America
GUTHY Guthy-Renker
HHDM Harte-Hanks Direct Marketing
HHMS Harte-Hanks Marketing Services
HAWES Hawes Center, Inc.
HEAD Head, W.L.
HEARST Hearst Magazines
HNM&T Hearst New Media & Technology
HELMS Helms, The Honorable Jesse
HERRERA Herrera, Barbara
HERTZ Hertz Corporation
HSN Home Shopping Network
HOUSEHOLD Household Bank
HFC Household Finance Corp.
HII Household International, Inc.
H&H Howe & Hutton, Ltd.—March 14 comment
H&H Howe & Hutton, Ltd.—March 30 comment
HUDSON Hudson City Savings Bank
HUNTINGTON Huntington National Bank
HUNTSVILLE Huntsville Times/Huntsville News
IDAG Idaho Attorney General
IMSP IMS Promotions
IRC Indiana Retail Council, Inc.
ICTA Industry Council for Tangible Assets
IMC InfoCision Management Corporation
INFOMALL Infomall TV Network
IMSI Infomercial Monitoring Service, Inc.
INSP Inspirational Network
ISA Interactive Services Association
IBM International Business Machines Corporation
IFI International Fabricare Institute
IFA International Franchise Association
IMS International Magazine Service of Northern California
IRL International Readers League of Indianapolis
IH Investment Hotlines
IA DOJ Iowa Department of Justice
ITI ITI Marketing Services, Inc.
PENNEY J.C. Penney Company, Inc.
JACKSON Jackson Citizen Patriot
RIVERS Joan Rivers Products, Inc.
JOHNSTON Johnston, Gloria
KALAMAZOO Kalamazoo Gazette
KAPLAN Kaplan, Jules
KIKENDALL Kikendall, Thomas J.
KLEID Kleid Company
KNIGHT Knight Ridder
KNOXVILLE Knoxville News Sentinel Co.—Mashburn
KNOXVILLE Knoxville News Sentinel Co.—Stevens
LANDMARK Landmark Community Newspapers, Inc.
LARK Lark In The Morning
LAURENZA Laurenza, Joseph
LCS LCS Direct Marketing Service
LEIBACHER Leibacher, Philip J. (2 copies)
LENOX Lenox, Inc.
LA TIMES The Los Angeles Times
LOWE'S Lowe's Studio
MPA Magazine Publishers of America
MSSC Magazine Subscription Sales Coalition
MRG Marketing Response Group & Laser Co., Inc.
MARKETLINK Marketlink
MARTIN Martin Direct
MASTERCARD Mastercard Int'l, Inc. & Visa USA, Inc.
MBNA MBNA America Bank, N.A.
MCI MCI Telecommunications Corporation
MCKNIGHT McKnight Management Company
MELLON Mellon Bank Corporation
MELTON Melton, Carol A.
MM Merchant Masters
MS Merchant Sampler
MGCB Merchants Gift Check Book
MGC Merchants Golden Checks
MP Merchants Promotions
M–I Messenger-Inquirer
MRA Michigan Retailers Association
MILLS Mills, Susan
MS PRESS The Mississippi Press

MOPA Missouri Press Association
MORA Missouri Retailers Association
MOBILE Mobile Media
MPR Mobile Press Register
MONEX MONEX
WARD Montgomery Ward
MMC Moore Medical Corporation
MORSE Morse, Larry E.
MBAA Mortgage Bankers Association of America
MPG MPG Newspapers
MTD MTD Services
MURRAY Murray Ledger & Times
MUSKEGON Muskegon Chronicle
MUTUAL Mutual of Omaha Companies
NAAG National Association of Attorneys General
NACAA National Association of Consumer Agency Administrators
NAR National Association of Realtors
NAPA National Automated Payment Association
NAMA National Automatic Merchandising Association
NBR National Bank of the Redwoods
NCTA National Cable Television Association, Inc.
NCL National Consumers League
NCMC National Credit Management Corporation
NFIB National Federation of Independent Business
NFN National Federation of Nonprofits
NFA National Futures Association
NNA National Newspaper Association
NPS National Promotional Services
NRF National Retail Federation
NSF National Science Foundation
NB NationsBank
NIE Nationwide Insurance Enterprise
NPC Neighborhood Periodical Club
NETWORK Network Direct
NHI New Hampton, Inc.
NYSCPB New York State Consumer Protection Board
NYTC New York Times Company
NEWS News Publishing Company
NAA Newspaper Association of America
NIMA NIMA International
NORDSTROM Nordstrom
NARDA North American Retail Dealers Association
NASAA North American Securities Administrators Association
NYNEX NYNEX
OHIO Ohio Health Care Products, Inc.
OLAN Olan Mills, Inc.
GLOBE Old Globe
OPC Oregonian Publishing Company
ORKIN Orkin Lawn Care
ORKIN Orkin Maid
ORKIN Orkin Pest Control—March 23 comment
ORKIN Orkin Pest Control—March 30 comment
ORKIN Orkin Plantscaping
PACESETTER Pacesetter Corporation
PTG Pacific Telesis Group
PATRIOT Patriot News
PEPPERTREE Peppertree Resorts, Ltd.
PLP Personal Legal Plans
PETERSON,P Peterson, Phyllis G.
PETERSON,R Peterson, Rosie Marie
PPI Phone Programs Inc.
PLAIN Plain Dealer
Plantscaping (see Orkin)
PCI Private Citizen, Inc. (initial letter & comment)
Private Citizen (addendum)
PCH Programmers Clearing House
PMAA Promotional Marketing Association of America & Incentive Federation
PRUDENTIAL Prudential Home Mortgage
PCH Publishers Clearing House
PDW Publishers Discount Warehouse—Barclay Fisher
PDW Publishers Discount Warehouse—Gina Lewis
PDW Publishers Discount Warehouse—J.B. Owen
PDW Publishers Discount Warehouse—David Rains
PDW Publishers Discount Warehouse—Jimmy Riggle
P&C Pullman & Comley
QUICKCARD QuickCard Systems
QVC QVC, Inc.
RDA Reader's Digest Association, Inc.
SEARCHLIGHT Record Searchlight—Kjellin
SEARCHLIGHT Record Searchlight—Dawson
REGAL COMM Regal Communications Corporation
REGAL GROUP Regal Group
REICHWEIN Reichwein, Kay
RPOA Resort Property Owners Association
RPI Resource Publications, Inc.
RICE Rice, Rodger D. and Barbara L.
RICH Rich, David G.
RITCHIE Ritchie Swimwear
RMH RMH Telemarketing
RODRIGUEZ Rodriguez, Ann
ROLLINS Rollins Inc. (2 copies)
RPS Rollins Protective Services
WEBER Ron Weber and Associates
ROTENBERG Rotenberg, Marion
SSI SafeCard Services, Inc.
SAGINAW Saginaw News
SFNA San Francisco Newspaper Agency
SEARS Sears Merchandise Group
SIASSR Securities Industry Association
SCIC Service Contract Industry Council (SCIC)
SHI Shop at Home
SHULMAN Shulman, Betty
SIGNATURE The Signature Group
S&S Simpson & Simpson, P.C.
SMITH Smith, R.
SDRA South Dakota Retailers Association
SBTC Southwestern Bell Telephone Company
SPIEGEL Spiegel, Inc.
SPRINT Sprint Corporation
STAR Star-Ledger
SIA Staten Island Advance
SMSI Strategic Marketing Specialists, Inc.
STUART Stuart News
S&W Sullivan & Worcester
SUN Sun Newspapers
SSE Superstar Satellite Entertainment
SUTTON Sutton Marketing
SYRACUSE Syracuse Newspapers
TALK800 Talk800
TMGI Telatron Marketing Group, Inc.
TELENATIONAL Telenational Marketing
TCPS Telephone Check Payment Systems
TPA Tennessee Press Association, Inc.
TEZANOS Tezanos, Maritza
TCI Thomas Cook, Inc.
TIEDT Tiedt, Thomas N.
TIMEWARNER Time Warner
T–I Times-Independent
TP Times Picayune
TITUS Titus, The Honorable Dina (2 letters)
TMG TMG (Television Marketing Group)
TMW TMW Marketing
TMO Total Marketing Outbound, Inc.
TUPPERWARE Tupperware Worldwide (2 copies)
TVMARKET TV Marketplace, Inc.
UCI United Color, Inc.
UPS United Parcel Service, Inc.
USTA United States Telephone Association
UMI Universal Media Inc.
USD University of San Diego, Center for Public Interest Law
USCE U.S. Coin Exchange
U.S. Coin Exchange (addendum)
USPS U.S. Postal Service
USWI US West, Inc.
VIACOM Viacom International
VINCENT Vincent, Chorey, Taylor & Feil
VIRGINIA Virginia State Corporation Commission
WACHOVIA Wachovia Corporation
WASHINGTON The Washington Post
WAUGH Waugh, John C.
WTO West Telemarketing Outbound
WU Western Union
WESTVACO Westvaco, Corp.
WILLIAMS Williams Television Time
WTC Wilmington Trust Company
WILSON Wilson Daily Times
WINCHESTER Winchester Sun
WINDSOR Windsor Vineyards
WINONA Winona Post
WFNNB World Financial Network National Bank
YOUNGBERG Youngberg, Arthur D.

Section B. Discussion of the Revised Proposed Rule

Section 310.1 Scope of the Regulations

Section 310.1 of the revised proposed Rule makes clear that this Rule does not apply to any activity excluded from the Commission's jurisdiction.[8] Thus, pursuant to the following jurisdictional limitations set forth in Section 5(a)(2) of the Federal Trade Commission Act [''FTC Act''],[9] this Rule does not apply to:

Banks, savings and loan institutions described in section 18(f)(3),[10] Federal credit unions described in section 18(f)(4),[11] common carriers subject to the Acts to regulate commerce, air carriers and foreign air carriers subject to the Federal Aviation Act of 1958, and persons, partnerships, or corporations insofar as they are subject to the Packers and Stockyards Act, 1921, as

[8] The Telemarketing Act states that ''no activity which is outside the jurisdiction of the [FTC] Act shall be affected by this Act.'' 15 U.S.C. 6105(a).

[9] 15 U.S.C. 45(a)(2).

[10] Section 18(f)(3) of the FTC Act, 15 U.S.C. 57(f)(3), describes ''savings associations as defined in section 3 of the Federal Deposit Insurance Act,'' 12 U.S.C. 1811 *et seq.*

[11] Section 18(f)(4) of the FTC Act, 15 U.S.C. 57(f)(4), describes ''Federal credit unions under sections 120 and 206 of the Federal Credit Union Act (12 U.S.C. 1766 and 1786).''

amended, except as provided in Section 406(b) of said Act.

In addition, this Rule does not apply to any entity that is not ''organized to carry on business for its own profit or that of its members.'' [12] Finally, this Rule does not apply to any entity engaged in the business of insurance to the extent that such business is regulated by State law.[13]

Section 310.2 Definitions

The revised proposed Rule amends, adds, or deletes certain definitions. The following definitions were deleted: ''business venture,'' ''goods or services,'' ''premium,'' and ''verifiable retail sales price.'' The Commission amended the definitions of: ''credit card,'' ''credit card sales draft,'' ''credit card system,'' ''investment opportunity,'' ''merchant,'' ''merchant agreement,'' ''prize,'' ''prize promotion,'' ''seller,'' ''telemarketer,'' ''telemarketing, and ''telephone solicitation.'' A definition for the term ''credit'' was added. Each of these changes, as well as a discussion of the definition of the term ''material,'' are discussed below.

1. *Business venture.* Section 310.2(a) of the initially proposed Rule defined the term ''business venture'' as any ''business arrangement, however denominated, including * * * 'a franchise' as * * * defined in the Commission's Franchise Rule * * *'' [14] which consists of the payment of any consideration for: ''(1) the right or means to offer, sell, or distribute goods or services (whether or not identified by a trademark, trade name, advertising, or other commercial symbol); and (2) the promise of more than nominal assistance * * * in connection with or incidental to the establishment, maintenance, or operation of a new business or the entry by an existing business into a new line or type of business.'' [15] This definition came into play in Section 310.3(a)(3) of the initially proposed Rule, which prohibited sellers or telemarketers from misrepresenting important information in connection with the offer, offer for sale or sale of any business venture. In addition, the initially proposed rule, at Section 310.4(a)(8), prohibited certain abusive practices concerning the use of shills in the sale of business ventures.

The Commission's Franchise Rule contains requirements and prohibitions that apply to franchises and business opportunities. Subsequent to the publication of the NPR in this proceeding, the Commission issued a request for comments on the Franchise Rule as part of its periodic regulatory review of Commission trade regulation rules and guides.[16] The Commission believes it is more appropriate to consider within the framework of that review process whether any new regulatory action is needed to address the sale of business ventures. Following this approach, the Commission ensures that any new regulatory requirement or prohibition applicable to franchises or business ventures will be codified in one regulation—the Franchise Rule—not spread out over two separate Rules. Accordingly, the definition of ''business venture,'' as well as the Sections of the initially proposed Rule prohibiting misrepresentations and abusive practices described above, have been deleted from the revised proposed Rule.

2. *Credit-related definitions.* The initially proposed Rule defined various credit-related terms that are used primarily in Section 310.3(c) relating to credit card laundering. These terms include ''acquirer,'' ''cardholder,'' ''credit card,'' ''credit card sales draft,'' ''credit card system,'' ''merchant,'' and ''merchant agreement.'' Very few commenters expressed concern about the foregoing proposed definitions, but some did suggest minor technical changes to reflect more accurately the credit card industry's terminology and practices.[17] Based on those comments, the Commission proposes the following changes.

The Commission proposes adding under Section 310.2(e) a definition of the term ''credit'' to mean ''the right granted by a creditor to a debtor to defer payment of debt or to incur debt and defer its payment.'' This definition has been added to clarify the scope of Section 310.3(c) relating to credit card laundering. It was apparent from several comments that clarification was necessary. Some commenters wanted to include all electronic payment systems under credit card laundering.[18] Based on the plain language of the statute and its legislative history,[19] however, Congress clearly meant to prohibit credit card laundering predicated upon the definition of ''credit'' used throughout the consumer credit statutes, and did not contemplate coverage of all electronic payment systems. Therefore, the proposed definition of ''credit'' tracks the statutory definition of ''credit'' under the Truth in Lending Act [''TILA''],[20] conforming the scope of Section 310.3(c) to that intended by Congress.

Based on comments similar to those that prompted the addition of the definition of the term ''credit,'' the Commission has modified the term ''credit card'' in Section 310.2(f) to make it consistent with the term as defined in the TILA, thereby explicitly limiting Section 310.3(c) to credit card laundering. The revised definition of ''credit card'' states: ''*Credit card* means any card, plate, coupon book, or other credit device existing for the purpose of obtaining money, property, labor, or services on credit.'' The revised definition is identical to the statutory definition of ''credit card'' contained in the TILA.[21]

The Commission has revised Section 310.2(g) defining the term ''credit card sales draft'' to drop any reference to specific forms of records. The revised definition states: ''*Credit card sales draft* means any record or evidence of a credit card transaction.'' This revision is designed to be flexible enough to anticipate future technological changes in how credit card transactions are handled. The modification is not intended to contract the range of recordkeeping formats that would be acceptable under the Rule.

The Commission also has modified the definition of the term ''credit card system'' in Section 310.2(h) to address concerns Visa and MasterCard raised that the initially proposed definition could be construed to cover any system put in place, including a system put in place by a deceptive telemarketer.[22] Visa and MasterCard suggested language that would preclude such an outcome by clarifying the intention to include only a credit card system to process credit card transactions involving credit cards issued or licensed by the credit card system operator. The Commission agrees with the observations and suggested language advanced by Visa and MasterCard. The revised proposed definition states: ''*Credit card system* means any method or procedure used to process credit card transactions involving credit cards issued or licensed by the operator of that system.''

In Sections 310.2 (l) and (m),[23] the Commission has revised the definitions of ''merchant'' and ''merchant agreement.'' In the initially proposed Rule, these definitions used the phrase

[12] *See* 15 U.S.C. 44.

[13] *See* Section 2 of the McCarran-Ferguson Act, 15 U.S.C. 1012(b).

[14] The term ''franchise'' is defined in the FTC's ''Franchise Rule,'' 16 CFR 436.2(a).

[15] 60 FR 8328.

[16] 60 FR 17656 (April 7, 1995).

[17] *See generally* MasterCard; NAAG; USPS; NCL.

[18] *See, e.g.,* MasterCard at 5.

[19] *See generally* House Report at 2; Senate Report at 2, 10.

[20] 15 U.S.C. 1603(e).

[21] 15 U.S.C. 1603(k).

[22] *See* MasterCard at 6.

[23] Initially proposed Rule Sections 310.2 (m) and (n), respectively.

''honor or accept, transmit or process credit cards in payment for goods or services.'' Visa's and MasterCard's comments pointed out that, according to prevailing industry usages, a merchant ''honors or accepts'' a credit card for payment, but does not ''transmit or process'' credit cards. By the same token, a merchant ''transmits or processes'' credit card payments, but does not ''honor or accept'' credit card payments.[24] Therefore, the language of these definitions has been redrafted to reflect more precisely these distinctions.

3. *Goods or services.* Many commenters expressed confusion over the scope of the definition of the term ''goods or services.''[25] The Commission initially included a definition of ''goods or services''[26] intending to clarify that all tangible and intangible goods and services are covered under the initially proposed Rule, including leases, licenses, memberships, and certain charitable solicitations. Based on the confusion that this attempt at ''clarification'' engendered, the Commission has deleted the definition of ''goods or services'' from the revised proposed Rule. That deletion does not reflect any intention to contract the scope of coverage of the Rule; nor does it mean that any of the foregoing goods or services and similar intangible goods or services are not covered under the Rule.

4. *Investment opportunity.* The initially proposed Rule defined the term ''investment opportunity''[27] to include ''anything, tangible or intangible, excluding a business venture, that is offered, offered for sale, sold, or traded (1) to be held, wholly or in part, for purposes of profit or income; or (2) based wholly or in part on representations, either express or implied, about past, present or future income, profit, or appreciation.''[28] A number of commenters suggested that this definition should be based solely on the objective test set forth in the second part of the definition; namely, the representations made by the seller.[29] In this way, sellers will be given clear notice that their products are covered by the Rule. These commenters believed that the first part of the definition, based on the customer's subjective intent in making a purchase, should be eliminated. The Commission agrees with this suggestion, and the revised proposed definition is now based solely on the express or implied representations about income, profit or appreciation.

The initially proposed definition also expressly stated that the term ''investment opportunity'' includes, but is not limited to, ''any business arrangement where persons acquire, or purportedly acquire, government-issued licenses or interests in one or more businesses derived from the possession of such licenses.'' Upon further consideration, the Commission believes this clause is unnecessary because government-issued licenses or interests derived from such licenses are indisputably within the jurisdiction of the Commission. The Commission therefore has deleted the foregoing extraneous clause from the revised proposed Rule, but has added clarification that the definition of the term, ''investment opportunity'' *does not* include ''sales of franchises subject to the Commission's [Franchise Rule] (cite omitted).''

5. *Material.* Some commenters expressed uncertainty as to what specifically is meant by the term ''material,'' as used in Section 310.2(k).[30] The Commission intends this term and its definition to comport with the Commission's Deception Statement and established Commission precedent. *Cliffdale Associates,* 103 FTC 110 (1984); *Thompson Medical Co.,* 104 FTC 648 (1984), *aff'd,* 791 F.2d 189 (D.C. Cir. 1986), *cert. denied,* 107 S.Ct. 1289 (1987); and the Commission's Deception Statement attached as an appendix to *Cliffdale Associates.* The Commission believes that further explanation of the term in the Rule is unnecessary given the comprehensible guidance in the cited case law and policy statement.

6. *Premium.* The Commission, in its revised proposed Rule, has deleted the initially proposed Rule provisions relating to premiums. The Commission believes that those deletions obviate the need to define this term. The deletion of the definition of the term ''premium'' and its associated provisions are not intended to be construed to eliminate from the Rule's coverage the misrepresentation of a premium's value in a telemarketing transaction.

7. *Prize and prize promotion.* Some modifications have been made to the initially proposed definition of the term ''prize.''[31] NAAG suggested in its comment that the reference to ''no obligation to purchase'' should be deleted from the definition.[32] NAAG pointed out that many fraudulent telemarketers seek to create the impression that consumers must purchase something in order to receive a prize, even though the promotion technically does not include such a requirement. In such cases, it may be difficult for law enforcement authorities to prove that there was ''no obligation to purchase,'' making inapplicable the definition of ''prize'' and the protections the revised proposed Rule would provide for consumers with respect to prize promotions. The Commission believes this is a valid concern and, because the limiting language about an obligation to purchase is not necessary to accomplish the definition's purpose, has deleted the language from the definition.

Another concern addressed in the revised proposed Rule involves the element of chance in the definition of ''prize.'' USPS noted that a typical deceptive prize scheme will involve a solicitation listing four or five items, with the consumer being told, without specificity, that he or she is guaranteed to receive one of them.[33] Because a consumer is ''guaranteed'' to receive one of the stated items, it could be construed that there is no element of ''chance'' involved in the offer and the item therefore is not a ''prize.'' The Commission believes this concern should be addressed and has therefore clarified the term ''chance'' included in the revised proposed definition of ''prize.'' The revised definition of the term ''prize'' states that ''chance exists if a person is guaranteed to receive an item and, at the time of the offer or purported offer, the telemarketer does not identify the specific item that the person will receive.''

The initially proposed Rule defined ''prize promotion''[34] to include

[24] *See* MasterCard at 6.

[25] *See, e.g.,* IFI at 1–2; ATFA at 8–12.

[26] Initially proposed Rule Section 310.2(j).

[27] Initially proposed Rule Section 310.2(k).

[28] As noted in the NPR, Sections 3(d) and (e) of the Telemarketing Act, 15 U.S.C. 6102(d) and (e), exclude from Rule coverage any of the following persons: a broker, dealer, transfer agent, municipal securities dealer, municipal securities broker, government securities broker, government securities dealer [as those terms are defined in Section 3(a) of the Securities and Exchange Act of 1934, 15 U.S.C. 78c(a)], an investment adviser [as that term is defined in Section 202(a)(11) of the Investment Advisers Act of 1940, 15 U.S.C. 80b-2(a)(11)], an investment company [as that term is defined in Section 3(a) of the Investment Company Act of 1940, 15 U.S.C. 80a-3(a)], any individual associated with those persons, or any persons described in Section 6(f)(1) of the Commodity Exchange Act, 7 U.S.C. 8, 9, 15, 13b, 9a.

[29] *E.g.,* ICTA at 28–30; Monex at 6; A-Mark at 2–4.

[30] *See generally* TMW; Monex. In the initially proposed Rule, the definition of ''material'' was numbered Section 310.2(l).

[31] The initially proposed Rule defined ''prize'' as ''anything offered, or purportedly offered, to a person at no cost and with no obligation to purchase goods or services and given, or purportedly given, by chance.'' Initially proposed Rule Section 310.2(q).

[32] NAAG at 9. *See also* IA DOJ at 20.

[33] USPS at 3.

[34] Initially proposed Rule Section 310.2(r).

traditional sweepstakes or other games of chance, as well as any oral or written representation that a person has won, has been selected to receive, or may be eligible to receive a prize or purported prize. The currently proposed definition has been revised slightly, (Section 310.2(q) of the revised proposed Rule), to make clear that the representations about winning may be either express or implied. This addresses a concern, raised by NAAG,[35] that fraudulent telemarketers often artfully craft their sales pitches to avoid express representations while delivering an implied message that a consumer has won a prize.

8. *Seller and telemarketer.* Another definition that elicited comments was the term ''seller.''[36] Many commenters expressed the view that the definition needed clarification as to what constitutes a ''seller'' under the Rule, particularly with respect to its application to diversified companies or divisions within one parent organization. For example, as it explained during the workshop conference, ANA represents many members that have divisions of large diversified companies, such as Orkin.[37] ANA explained that in addition to pest and termite control that people are familiar with, Orkin also offers a number of other services unrelated to pests and termites.[38]

After careful consideration, the Commission believes that the definition of the term ''seller'' is clear. The Commission intends that this definition encompass distinct corporate divisions as separate ''sellers.'' The determination as to whether distinct divisions of a single corporate organization will be treated as separate sellers will depend on such factors as: (1) Whether there exists substantial diversity between the operational structure of the division and other divisions or the corporate organization and (2) whether the nature or type of goods or services offered by the division are substantially different from those offered by other divisions or the corporate organization.

The term ''telemarketer,'' included in revised Section 310.2(t),[39] also elicited numerous requests for clarification. The Commission believes that the definition is clear. The Commission intends that the definition of the term ''telemarketer'' apply to persons making a telephone call to, or receiving a telephone call from, a customer[40] in connection with or about the purchase of goods or services. It does not include persons making or receiving customer service calls or similar tangential telephone contacts unless a sales offer is made and accepted during such calls. To provide industry with further guidance as to the intended scope of the term ''telemarketer,'' the Commission has substituted the phrase ''telephone calls to'' in place of ''telephonic communication.''

Commenters also raised concerns about whether sellers and telemarketers should be held jointly liable under the Rule for the actions of the other. The Commission finds nothing in the statute or legislative history to support the view that it is the intent of Congress to impose joint and several liability between a seller and a telemarketer. Nor does the Commission intend such a result. However, the revised proposed Rule's provisions state that a seller or a telemarketer can be held liable for violating various parts of the Rule if either engages in the prohibited acts or practices. Additionally, liability can be imposed on a seller or telemarketer for assisting and facilitating a Rule violation if either meets the standard set forth in Section 310.3(b). Therefore, although the Rule does not impose joint and several liability, a seller or telemarketer can be held liable if either engages directly, or substantially assists or facilitates the other, in any violation of this Rule.

9. *Telemarketing.* The definition of ''telemarketing,'' in Section 310.2(u),[41] engendered more comments by far than any other definition. Based on the comments submitted by law enforcement and industry representatives, the Commission proposes a revised definition of ''telemarketing.'' The revised definition states:

Telemarketing means a plan, program, or campaign which is conducted to induce the purchase of goods or services by use of one or more telephones and which involves more than one interstate telephone call. The term does not include the solicitation of sales through the mailing of a catalog which: contains a written description or illustration of the goods or services offered for sale; includes the business address of the seller; includes multiple pages of written material or illustrations; and has been issued not less frequently than once a year, when the person making the solicitation does not solicit customers by telephone but only receives calls initiated by customers in response to the catalog and during those calls takes orders only without further solicitation. For purposes of the previous sentence, the term ''further solicitation'' does not include providing the customer with information about, or attempting to sell, any other item included in the same catalog which prompted the customer's call or in a substantially similar catalog.

The revised definition of ''telemarketing'' follows more closely the statutory definition set forth by Congress in the Telemarketing Act.[42] The Commission has carefully considered suggestions that the initially proposed definition exceeded the Commission's statutory authority and has determined that closer adherence to the statutory language is the more appropriate approach.[43] This change also limits the definition of ''telemarketing'' to telephone calls and excludes from coverage other ''telephonic mediums.'' After considering many comments that objected to the Rule's coverage of on-line services, the Commission acknowledges that it does not have the necessary information available to it to support coverage of on-line services under the Rule.[44]

The revised definition of ''telemarketing'' also eliminates specific language relating to coverage of inbound calls. Many commenters expressed concern that inclusion of such calls went beyond the Commission's statutory authority.[45] As will be discussed further in the discussion of Section 310.6, given the abundant, unambiguous legislative history on this point,[46] and the omission from the statute of any indication that inbound calls are not within its ambit, the Commission rejects this view. Other commenters[47] stated that including inbound calls in the proposed definition caused confusion about the applicability

[35] NAAG at 10.

[36] Initially proposed Rule Section 310.2(s).

[37] Tr. at 666.

[38] *Id.*

[39] Initially proposed Rule Section 310.2(u).

[40] Revised Section 310.2(i) defines ''customer'' as ''any person who is or may be required to pay for goods or services offered through telemarketing.''

[41] Initially proposed Rule Section 310.2(v).

[42] 15 U.S.C. 6106(4).

[43] The Commission, however, does not adopt the view that the definition of ''telemarketing'' in the initially proposed Rule went beyond the Telemarketing Act. In enacting the Telemarketing Act, Congress clearly intended to cover purchases of tangible as well as intangible goods or services, including leases and licenses. House Report at 11; Senate Report at 8. In any ''purchase'' there is an exchange of consideration, in other words a ''payment.'' Because deceptive telemarketers could construe the term ''purchase'' to apply only to the acquisition of a ''tangible'' good or service, the Commission substituted the term ''payment'' for ''purchase.'' The Commission intended to clarify that sales of intangible goods or services were included in the term ''telemarketing,'' as they still are under the revised proposed Rule.

[44] Such media remain subject to the Commission's jurisdiction under the FTC Act, 15 U.S.C. 41 *et seq.* See, e.g., FTC v. Corzine, dba Chase Consulting No. CIV-S–94–1146–DFL JFM (E.D. Cal. Dec. 1994).

[45] *See, e.g.,* DSA at 6; NRF at 20–21.

[46] House Report at 2; Senate Report at 7–8.

[47] *E.g.,* DMA at 17–18; MPA at 8–9.

of the proposed general advertising exemption contained in Section 310.6 of the initially proposed Rule. Because the definition of ''telemarketing'' encompasses coverage of inbound calls under the Rule, it is no longer necessary to include such calls explicitly within the revised definition of ''telemarketing.'' Furthermore, the inbound call exemption has been clarified in Section 310.6 to eliminate the confusion expressed in the comments. The revised proposed Rule's coverage, however, extends to inbound calls.

Many industry comments addressed the term ''further solicitation'' used in the part of the ''telemarketing'' definition that exempts from coverage solicitation of sales through the mailing of a catalog.[48] Numerous industry commenters suggested that reputable catalog companies have substantially similar catalogs in the public domain that mirror each other but may also be targeted to a particular season, activity, or product. For example, a mail order clothing seller may have summer and spring catalogs that include many of the same products, but they are different catalogs nevertheless. Commenters suggested that offering a caller goods or products contained in a catalog substantially similar to the catalog that generated the call should not trigger Rule coverage for a catalog seller.[49] Counterbalancing this point is the Commission's concern that exemptions from coverage be narrowly drawn to discourage exploitation of a perceived loophole by unscrupulous telemarketers. The revised proposed Rule therefore is modified to accommodate legitimate industry's practice of regularly mailing seasonal and similar catalogs, at the same time limiting the exemption to those catalogs that are ''substantially similar'' to the catalog that generated the customer's call.

Several commenters also expressed uncertainty as to whether ''telemarketing'' included calls to schedule appointments for subsequent face-to-face sales presentations and calls to inform persons about upcoming store sales or promotions.[50] The Commission believes that the definition clearly reflects the intention to cover those telephone calls that result in the sale of goods or services over the telephone without any opportunity by the customer to examine the goods or services. Obviously, a face-to-face sales presentation provides such an opportunity and the notification of upcoming sales or promotions inviting a customer to come into a store or other in-person setting does not culminate in a telephone sale.

10. *Telephone solicitation.* The initially proposed Rule included a definition of the term ''telephone solicitation.'' As noted in the NPR, the definition was ''intended to include only outbound sales calls, *i.e.,* telephone calls that are initiated by a telemarketer to a customer to induce payment for goods or services.'' [51] Based on the comments received about other Sections of the initially proposed Rule that used the term ''telephone solicitation,'' the intended coverage of only outbound sales calls was not clear.[52] In order to clarify this point, the revised proposed Rule now defines the term ''outbound telephone call'' in Section 310.2(n) to mean ''a telephone call initiated by a telemarketer to induce the purchase of goods or services,'' and uses it in every instance where the initially proposed Rule used the term ''telephone solicitation.''

11. *Verifiable retail sales price.* The initially proposed Rule defined the term ''verifiable retail sales price.'' [53] The Commission has deleted all references to ''verifiable retail sales price'' in the revised proposed Rule. The Commission does not believe including a definition of ''verifiable retail sales price'' is necessary in this revised proposed Rule. Where appropriate, the Commission has used the term ''value'' in the Rule. The Commission intends that any represented value have a reasonable basis in fact.

Section 310.3 Deceptive Telemarketing Acts or Practices

1. *Prohibited Deceptive Telemarketing Acts or Practices.* Revised Section 310.3(a) continues to require affirmative disclosures and prohibits misrepresenting material information. As in the initial version of the proposed Rule, Section 310.3(a)(1) requires affirmative disclosures of general categories of material information. Many industry commenters, however, expressed concern about the uncertain scope of the affirmative disclosure obligation embodied in Section 310.3(a)(1).[54] The Commission has carefully considered these concerns and revised the proposed Rule accordingly. Specifically, the initially proposed rule required disclosure of ''the total costs, terms, and material restrictions, limitations, or conditions of receiving any goods or services.'' Revised Section 310.3(a)(1) now requires disclosure of ''the total costs * * * [and] all material restrictions, limitations, or conditions *to purchase, receive or use* any goods or services *that are the subject of the sales offer.*'' This revision is intended to narrow and clarify the scope of the disclosure obligation. The initially proposed rule also specified that the disclosures required by Section 310.3(a)(1) be made ''before payment is requested * * * and in the same manner and form as the payment request.'' In response to strong industry urging for greater flexibility in the manner and timing of essential disclosures,[55] the revised proposed rule specifies only that the disclosures be made ''before a customer pays'' and that they be made ''in a clear and conspicuous manner.'' These disclosures may be made either orally or in writing. The determining factor for when a customer pays, regardless of whether by cash, check, credit card, demand draft, or otherwise, is when a customer sends funds by any means or provides credit card or bank account information to the seller or telemarketer to purchase goods or services. Additionally, Section 310.3(a)(1) no longer requires an affirmative disclosure of a seller's refund, cancellation, exchange, or repurchase policies, *unless* the seller or telemarketer chooses to make representations relating to such policies a part of the sales offer. If a seller or telemarketer chooses to make such policies a part of the sales offer, then the seller or telemarketer must disclose all the *material aspects* of the terms and conditions of such policies, orally or in writing, before a customer pays for the goods or services offered. Finally, a seller or telemarketer must disclose that no purchase is necessary to win if a prize promotion is offered in conjunction with a sales offer of goods or services.

Section 310.3(a)(2) continues to prohibit misrepresentations of several categories of material information. The information deemed material under Section 310.3(a)(2) is based on established case law and the Commission's deception policy statement. The Commission, however, has determined to drop the lengthy enumeration of specific prohibited misrepresentations contained in Sections 310.3(a)(2)(viii)-(xxiv) of the initially proposed Rule. These specific prohibited misrepresentations, each of

[48] *See, e.g.,* APAC at 9; NRF at 23–25; MPA at 10.

[49] *E.g.,* NRF at 24.

[50] See, e.g., WFNNB at 1.

[51] 60 FR at 8315.

[52] *See, e.g.,* MPA at 19; NRF at 35.

[53] Initially proposed Rule Section 310.2(x).

[54] *See* NIMA at 11; ACAR at 12; TR. at 292 (Monex), 296–97 (PMAA), 303–05 (ICTA)

[55] *See* PMAA at 80; OPC at 2–3; ADS at 1; MORA at 1.

which was based on allegations in complaints filed in recent years by the Commission under Section 13(b) of the FTC Act,[56] are no longer necessary because they are subsumed in the general prohibitions against misrepresentations set forth in Section 310.3(a)(2) of the revised proposed Rule. No inference should be drawn that these deletions in any way alter the Commission's view that the misrepresentations enumerated initially in proposed Sections 310.3(a)(2)(viii)-(xxiv) would violate the FTC Act as well as the revised proposed Rule. The Commission believes that this more concise regulatory approach effectuates Congress' legislative intent and addresses the concerns of many commenters, consumer groups,[57] law enforcement,[58] and industry [59] alike, who asserted that a general standard of deception was necessary either in addition to or instead of the enumerated acts or practices.

Sections 310.3(a)(2)(i)-(ii) prohibit misrepresenting information required to be disclosed under Section 310.3(a)(1). The scope of Sections 310.3(a)(2)(i)-(ii) has been delineated more precisely than their counterparts in the initially proposed Rule Sections 310.3(a)(2)(i)-(iii). Revised Sections 310.3(a)(2)(i)-(ii) now include the limiting phrases ''to purchase, receive, or use'' and ''that are the subject of a sales offer.'' The same clarifying phrases have been added to revised Section 310.3(a)(2)(iii), which specifies that misrepresenting ''any material aspect of the performance, efficacy, nature, or central characteristics of goods or services that are the subject of the sales offer'' violates this Rule. Commission case law and policy are clear that such information is material to a person's choice of or conduct regarding the purchase of goods or services. Similarly, representations as to a seller's refund, cancellation, exchange, or repurchase policies are material to a person's purchase decision. Section 310.3(a)(2)(iv) (identical to Section 310.3(a)(2)(v) of the initially proposed Rule) therefore prohibits misrepresenting the latter category of information.

Section 310.3(a)(2)(v) of the revised proposed Rule prohibits misrepresenting ''any material aspect of a prize promotion, including but not limited to the odds of winning, the nature or value of a prize, or that payment is required to receive a prize.'' The Commission has enumerated specific examples of material aspects of a prize promotion based on misrepresentations that the Commission has alleged in complaints filed under Section 13(b) of the FTC Act. The Commission believes that treating prize promotions as a separate general category is warranted given the great number of deceptive prize promotions and the distinct characteristics associated with such promotions.[60] Moreover, the legislative history clearly shows that Congress specifically intended that the Rule cover prizes or awards.[61] Because there are certain aspects of a prize promotion that could be construed to be outside the scope of provisions narrowly limited to ''the subject of a sales offer,'' the Commission believes that it is necessary to include revised Section 310.3(a)(2)(v). The prohibitions against prize promotion misrepresentations under Section 310.3(a)(2)(v) are in addition to the other prohibitions set forth in Section 310.3(a)(2).

Similarly, Section 310.3(a)(2)(vi) prohibits misrepresenting material aspects of an investment opportunity. The legislative history reflects Congress' recognition that deceptive investment opportunities account for a considerable percentage of deceptive telemarketing.[62] Moreover, since 1991, deceptive investment scams account for approximately 43% of the Commission's telemarketing cases. The amount at risk for a consumer is generally far greater in investment scams than in deceptive schemes involving other types of consumer goods or services. Thus, investment opportunities are an area of heightened concern for consumers and the Commission. The revised proposed rule includes Section 310.3(a)(2)(vi), prohibiting misrepresentation of specified aspects of investment opportunities. This provision is included to obviate any possible construction that might exclude investment opportunities from the scope of Sections 310.3(a)(2)(i)-(iii). These general initial provisions are designed to embrace a limitless range of goods or services but are narrowly drawn to prohibit misrepresentations centered on purchase, receipt or use, or upon ''performance, efficacy, nature, or central characteristics,'' which are unlike investment-specific attributes such as risk, liquidity, earnings potential, or profitability. The prohibitions on misrepresentations under Section 310.3(a)(2)(vi) are in addition to, not in lieu of, other provisions under Section 310.3(a)(2).

Finally, the Commission has included Section 310.3(a)(2)(vii) that prohibits misrepresenting ''a seller's or telemarketer's affiliation with, or endorsement by, any government or third-party organization.'' The Commission believes that this Section is necessary based on its own experience in law enforcement actions against deceptive telemarketers as well as the information state law enforcement agencies provided. Based on the Commission's enforcement experience, deceptive telemarketers bolster their credibility by misrepresenting that they are endorsed by or affiliated with charitable, police, civic, or similar organizations. A separate category is required because these types of misrepresentations, again, could be construed as outside the apparent scope of Sections 310.3(a)(2)(i)-(iii). However, Section 310.3(a)(2)(vii) is in addition to, not in lieu of, other provisions under Section 310.3(a)(2).

The Commission has deleted Section 310.3(a)(3) relating to business ventures. The Commission, as stated in Section 310.2, believes it is more appropriate to consider business ventures in the context of the Commission's recently-initiated Franchise Rule review. This should not be construed to mean, however, that if a business venture is sold through telemarketing and does not meet the coverage requirements under the Franchise Rule as currently in effect, it is exempt under this Rule. Such a ''business venture'' will still be deemed to be covered under this Rule as a good or service and be subject to the Rule's disclosure requirements and prohibitions.

Revised Section 310.3(a)(3) generally prohibits ''making a false or misleading statement to induce any person to pay for goods or services.'' This general provision subsumes Sections 310.3(a)(4) and (5) of the initially proposed Rule. Former Section 310.3(a)(4) required written authorization before taking any funds from a consumer's checking, savings, or similar account. Former Section 310.3(a)(5) required express authorization before ''obtaining any amount of money from a person through any means.'' The revised Section, through more economical means, reflects how deceptive sellers and telemarketers gain access to consumers' money through false and misleading statements regardless of the payment system used. While addressing those deceptive practices, revised Section

[56] 15 U.S.C. 53(b).

[57] *See, e.g.,* AARP at 10.

[58] *See, e.g.,* USPS at 4.

[59] *See, e.g.,* APAC at 2; ATA at 5; DMA at 19; Monex at 8–9.

[60] Almost 32% of the 141 telemarketing cases brought by the Commission since 1991 related to deceptive prize promotions.

[61] *See* Senate Report at 8.

[62] *See* Senate Report at 8.

310.3(a)(3) also avoids unduly burdening legitimate industry's nondeceptive use of various payment systems.[63]

2. *Assisting and Facilitating.* Section 310.3(b) received substantial attention from commenters. Law enforcement and consumer groups generally were favorable but some suggested including a more general prohibition against assisting and facilitating.[64] Industry comments raised concerns that the knowledge standard in the initially proposed Rule was too vague or harsh and that the liability for assisting and facilitating should attach only where the assistance or support is directly linked and material to the Rule violation.[65] Some industry commenters suggested that the Rule include exemptions for certain practices and that this Section not impose any affirmative duties on third parties.[66] All commenters raised valid and important issues that the Commission has considered.

To address concerns that the ''knew or should have known'' standard initially proposed may have swept too broadly and exposed those only casually associated with deceptive telemarketing to liability as assistors or facilitators, the Commission now proposes the ''actual knowledge or conscious avoidance'' standard advanced by a number of participants in the public workshop.[67] This standard is similar to the knowledge standard applicable in actions under Section 13(b) of the FTC Act governing individual liability to pay restitution to consumers for injury resulting from law violations of a corporation controlled by the individual[68]—a type of vicarious liability somewhat analogous to assistor and facilitator liability. The Commission intends that this revision delineate the scope of assistor and facilitator liability more clearly and more narrowly than did the ''know or should have known'' standard.

The Commission also believes it appropriate to specify that there be some connection between the substantial assistance provided to a deceptive telemarketer and resulting violations of core provisions of the revised proposed Rule. Revised proposed Section 310.3(b) therefore requires that there be substantial assistance related to the commission or furtherance of a core rule violation. The provision now reads as follows:

> It is a deceptive telemarketing act or practice and a violation of this Rule for a person to provide substantial assistance or support to any seller or telemarketer when that person knows or consciously avoids knowing that the seller or telemarketer is engaged in any act or practice that violates §§ 310.3 (a) or (c) or 310.4 of this Rule and such substantial assistance is related to the commission or furtherance of that act or practice.

Section 310.3(b)(2) of the initially proposed Rule set forth five specific examples of conduct deemed to meet the ''substantial assistance'' prong of the two-prong test for ''assisting and facilitating'' set forth in Section 310.3(b)(1), which, when coupled with knowledge required by the second prong, would constitute a violation of this Rule. The prevailing view among industry commenters was that this list of examples would be interpreted as condemning a range of commercial activities that, in and of themselves, are not injurious to consumers or unlawful.[69] The resulting chilling effect could result in unnecessary costs to industry, which, of course, would ultimately be borne by consumers. This detrimental effect, combined with the potential for the Section to be construed as limiting the scope of assisting and facilitating to *only* the listed activities, and thus hindering effective law enforcement efforts, outweighed any benefits such intended guidance could likely provide. The Commission has eliminated examples from the prohibition, but still considers the acts or practices enumerated in former Section 310.3(b)(2) to be illustrative of those that provide substantial assistance to Rule violators when coupled with knowledge and a relationship to a specified Rule violation. Acts of substantial assistance that could meet the Section 310.3(b) liability standard include: providing lists of contacts to a seller or telemarketer that identify persons over the age of 55, persons who have bad credit histories, or persons who have been victimized previously by deceptive telemarketing or direct sales; providing any certificate or coupon which may later be exchanged for travel-related services; providing any script, advertising, brochure, promotional material, or direct marketing piece used in telemarketing; or providing an appraisal or valuation of a good or service sold through telemarketing when such an appraisal or valuation has no reasonable basis in fact or cannot be substantiated at the time it is rendered.

3. *Credit Card Laundering.* The Commission received very few comments that offered changes or that were critical of Section 310.3(c), which pertains to credit card laundering. Comments that did address this Section suggested that agents, licensees, and independent contractors and subcontractors be included under the definition of ''merchant.''[70] Visa and MasterCard stated that they believed this Section to be ''well designed to attack a critical link in telemarketing fraud,'' but proposed adding language that would not prohibit access to the credit card system if the credit card system permits such access through means other than a written merchant agreement.[71]

The Commission believes that the distinction between ''launderers'' and others who exploit the credit card system, and ''merchants'' and others who make legitimate use of such systems, rests on whether the operator of the system has given permission for such access. For example, some merchants have the permission of their credit card system operator to permit lessees to deposit their sales transactions through the merchant's account. On the other hand, the hallmark of prohibited laundering is providing access to a merchant account to an entity not *authorized* by the system operator to have such access. Based on the foregoing, the Commission does not believe it is wise to broaden the definition of ''merchant.'' An underlying purpose of this Section is to delineate clearly, in accordance with legitimate industry standards, those persons who are deemed to properly have access to the credit card system. However, the comments of Visa and MasterCard point out a way that the provision can be modified to allow for situations where a credit card system expressly permits access to the applicable system, other than through a

[63] Several commenters and workshop participants provided information tending to refute the proposition that demand drafts are characteristic solely of deceptive telemarketers. *See, e.g.,* NAPA; Autoscribe; Olan.

[64] *See generally* NCL at 8; USPS at 7–8.

[65] *See, e.g.,* WFNNB at 2; MPA at 11–13; ATA at 6; DMA at 22–24; NRF at 29; Monex at 11–13.

[66] *See generally* PMAA; ADS; LCS; DMA; ISA.

[67] *See e.g.,* Tr. at 372–73 (Monex); 382–85 (DMA).

[68] Under these cases, the knowledge requirement is well-established and can be fulfilled by showing either actual knowledge, reckless indifference to the truth or falsity of the representation, or an awareness of a high probability of fraud coupled with an intentional avoidance of the truth. *E.g., FTC v. American Standard Credit Systems, Inc.,* CV 93–2623 LGB (JRx) (C.D. Cal. Aug. 15, 1994); *FTC v. Amy Travel Serv.,* 875 F.2d 564, 573–74 (7th Cir.), cert. denied, 493 U.S. 954 (1989); *FTC v. Kitco of Nevada, Inc.,* 612 F. Supp. 1282, 1292 (D. Minn 1985); *FTC v. International Diamond Corp.,* 1983–2 Trade Cas. (CCH)

65,725 at 69,707 (N.D. Cal. 1983). This knowledge standard has not imposed any unduly onerous problems of proof on the Commission in its Section 13(b) telemarketing fraud cases and has not impeded the Commission's ability to obtain restitution from individual defendants.

[69] *See generally* DMA; PMAA.

[70] *E.g.,* DMA at 24; NRF at 30.

[71] *See* MasterCard at 10–11.

written merchant agreement. Because such a modification will give rise to no foreseeable problems of proof to law enforcement efforts, the Commission concludes that this modification is appropriate.[72] The Commission therefore has determined that the modifications needed to Section 310.3(c) are to add language to the preamble to state that ''except where expressly permitted by the applicable credit card system * * *'' and to add similar language to the end of Section 310.3(c)(3).

Section 310.4 Abusive Telemarketing Acts or Practices

1. *Abusive Conduct Generally.* Section 310.4(a) of the initially proposed Rule set forth eight different prohibited abusive telemarketing acts or practices. The revised proposed Rule deletes four of those provisions, and amends the other four prohibited practices. Each of these practices will be discussed in turn.

(a) *Threats, intimidation, or the use of profane or obscene language.* The initially proposed Rule prohibited threats or intimidation in Section 310.4(a)(1). The Commission believes such acts are clearly abusive in telemarketing transactions, and this prohibition remains in the revised proposed Rule. Commenters noted that threats are a means of perpetrating a fraud on vulnerable victims, and that many older people can be particularly vulnerable to threats and intimidation.[73] Other commenters expressed the view that the terms ''threats'' and ''intimidation'' are vague and need to be defined.[74] The Commission does not believe further definition of these terms is necessary in the text of the Rule; as drafted, this Section clearly contemplates that all threats be covered, including those particularly stressed by NCL—threats of bodily injury and financial ruin and threats to ruin credit. It also prohibits intimidation—acts which put undue pressure on a consumer or which call into question a person's intelligence, honesty, reliability, or concern for family. Repeated calls to an individual who has declined to accept an offer may also be an act of intimidation.[75]

The Commission has also added under this Section a prohibition against the use of profane or obscene language. The legislative history of the Telemarketing Act indicates that the Commission should consider prohibiting such abusive practices, and should ''draw upon its experience in enforcing standards established under the Fair Debt Collection Practices Act [''FDCPA''], 15 U.S.C. 1692, in defining these terms.'' [76] The FDCPA includes a specific prohibition on the use of profane or obscene language,[77] and the Commission believes such a prohibition is equally appropriate in this Rule.

(b) *Courier pickups.* The initially proposed Rule prohibited any seller or telemarketer from providing for or directing a courier to pick up payment from a customer.[78] Law enforcement and consumer representatives generally applauded this provision.[79] IA DOJ noted: ''A critical component of a fraudulent telemarketing scheme is getting the victim's money before the victim has the opportunity to reconsider, or before a third party, such as a relative, banker, or law enforcement authority becomes involved.'' [80] In addition, NCL stated that over 45% of all telemarketing complaints it receives involve shipment by private courier, and almost all of these shipments contain personal checks. According to NCL, a personal check sent via a private courier is the single most popular method of removing money from the pockets of victims.[81]

On the other hand, many industry representatives opposed this provision.[82] Commenters noted various ways this prohibition would harm legitimate businesses, including: prohibiting C.O.D. transactions;[83] preventing newspaper carriers from making door-to-door collections on their paper routes;[84] eliminating the merchant coupon book industry;[85] and precluding cable operators and others from using couriers to pick up payments from customers who are in arrears and who wish to avoid disconnection of their service.[86]

After reviewing these comments, the Commission agrees that a ban on the use of courier pickups of consumer payments is unworkable. There is nothing inherently deceptive or abusive about the use of couriers by legitimate business, and the comments show that many legitimate businesses use them. While fraudulent telemarketers often use couriers to obtain quickly the spoils of their deceit, such telemarketers engage in other acts or practices that clearly are deceptive or abusive, and that are prohibited by this Rule. Thus, the prohibition of courier use is unnecessary, and it has been deleted from the revised proposed Rule.

(c) *Credit repair services.* Section 310.4(a)(3) of the initially proposed Rule prohibited any seller or telemarketer from requesting or receiving payment of any fee or consideration for goods or services represented to improve a person's credit history, credit record, or credit rating until the contract for the services had expired and the promised results had been achieved.[87] A number of commenters strongly supported this prohibition as a necessary limitation on the telemarketing of deceptive credit repair services.[88] The Commission agrees, and is retaining this provision in the revised proposed Rule, with the following two amendments suggested by commenters.

First, NCL suggested, and the Commission agrees, that the prohibition on advance payments should extend to services that promise to remove derogatory information from a consumer's credit record, in addition to those services that simply promise to improve a person's credit history, record or rating.[89] Second, the revised proposed Rule will not permit, as documentation that the promised results have been achieved, records from the original furnisher or provider of the derogatory information to the consumer reporting agency. As noted by NYSCPB, the original furnisher of such information cannot control the actions of the consumer reporting agencies.[90]

[72] NCL requested in its comments pertaining to credit card laundering that the Commission consider protections relating to the use of ''credit card checks'' and ''credit card cash advances.'' *See* NCL at 31. NCL expressed concern that credit card protections contemplated in Section 310.3(c) and the Fair Credit Billing Act [''FCBA''], 15 U.S.C. 1666, do not extend to those alternative credit methods. There is no indication in the legislative history or the Telemarketing Act that Congress intended to include under credit card laundering the alternative credit methods NCL describes. Moreover, the Commission does not have the authority under the Act to expand or affect the scope of the FCBA. The Commission believes, however, that transactions effected through the use of the alternative credit methods NCL described are adequately protected under the FCBA dispute procedures. *Id.*

[73] IA DOJ at 13; AARP at 14.

[74] ADC at 1; ARDA at 21.

[75] NCL at 32–33. *Accord,* USPS at 11.

[76] *See, e.g.,* House Report at 8.

[77] Section 806(2) of the FDCPA, 15 U.S.C. 1692d(2).

[78] Initially proposed Rule Section 310.4(a)(2).

[79] *See, e.g.,* NAAG at 23–24; USPS at 11–12; CFA at 3; AARP at 14–15.

[80] IA DOJ at 6.

[81] NCL at 33–35.

[82] *See, e.g.,* Monex at 13–14; A-Mark at 10.

[83] DMA at 25; PMAA at 84; DMSI at 5; MRG at 4; UPS at 2.

[84] CDI at 1; CA at 3; Cox at 11; Gannet at 6; NAA at 15; Washington at 17.

[85] AWMI at 1; GGP at 2; GCM at 1; MGC at 1; MP at 1.

[86] Comcast at 5, n.5.

[87] Revised proposed Rule Section 310.4(a)(2).

[88] NAAG at 24; CFA at 3; USD at 4; NCL at 37; USPS at 12. ABA ''commends'' the Commission for this provision. ABA at 9.

[89] NCL at 38.

[90] NYSCPB at 8.

Thus, for a variety of reasons, a consumer's credit report may not be changed, even though the original furnisher has documentation requesting such a change to occur. The Commission, therefore, has revised the initially proposed Rule to require the examination of a consumer's credit report, to determine if the services have been provided, before the seller or telemarketer may request or receive payment from the customer.

A number of commenters suggested amending this Section to clarify that it does not apply to credit monitoring services.[91] The Commission did not intend to limit the actions of such legitimate services, and does not believe this Section would prohibit such services.

Other commenters stated that this provision may inadvertently prohibit the telemarketing of secured credit cards, harming consumers who use such cards to develop a satisfactory credit record.[92] In fact, these commenters suggested an exemption to this provision for the telemarketing of secured credit cards by depository institutions. The Commission does not believe such an exemption is necessary, because banks, savings and loans, and Federal credit unions are outside of the jurisdiction of the FTC, and are therefore not covered by the Rule.[93]

(d) *Recovery room services.* The next abusive practice prohibited by the initially proposed Rule involved recovery room scams.[94] In these operations, a fraudulent telemarketer will call a consumer who has lost money in a previous scam and make false promises that the telemarketer can recover that money, in exchange for a fee paid in advance. After the fee is paid, the promised services are never provided. As law enforcement commenters noted, the recovery scheme is especially abusive, targeting particularly vulnerable victims, including the elderly.[95]

A number of financial institutions requested clarification that this Section does not apply to legitimate debt collection activities.[96] In addition, another commenter opined that this Section, as proposed, could impair the ability of newspapers to accept classified ads for lost and found items.[97] The Commission believes that changing the phrase ''induce payment'' to ''induce purchase'' in the definition of ''telemarketing'' clarifies that debt collection practices are not the types of telemarketing practices at issue in this Rule. Furthermore, the Commission is revising this Section to make it applicable only to recovery services that promise the return of money or other items of value paid for or promised to the consumer *in a previous telemarketing transaction.* Thus, this Section will not apply to attempts to recover money or items lost outside of telemarketing.

The initially proposed Rule prohibited sellers or telemarketers from requesting or receiving payment of any fee for recovery services until three days after the recovered money or other item is delivered to the consumer. AARP noted that the three-day period may be insufficient to protect consumers, and asked that the Rule allow the minimum time necessary for out-of-state checks to clear.[98] The Commission agrees, and has lengthened the time period that must elapse before providers of such services can request payment from consumers to seven business days after delivery of the recovered money or other item of value.

Finally, the initially proposed Rule provided an exemption from this Section for licensed attorneys or licensed private investigators pursuant to a written agreement with the consumer. Some commenters believed that private investigators should not be exempt, because such an exemption would only lead to fraudulent recovery services signing up with unscrupulous private investigators as a method of evading this prohibition.[99] The Commission agrees, and has removed the exemption for private investigators.

(e) *Advance fee loans.* Section 310.4(a)(5) of the initially proposed Rule prohibited any seller or telemarketer from requesting or receiving payment of any fee or consideration in advance of obtaining a loan or any credit service when the seller or telemarketer has guaranteed or represented a high likelihood of success in obtaining or arranging a loan or credit service for a person.[100] DMA urged that the Commission clarify that this Section does not apply to services, such as monitoring or counseling, that are not represented to improve a person's credit history.[101] The Commission did not intend for such services to be covered, and is changing the phrase ''credit service,'' used in the initially proposed Rule, to ''extension of credit.'' In this manner, the application of this prohibition only to loans or other extensions of credit will be clearer.[102]

(f) *Prize distribution.* The next prohibited abusive practice included in the initially proposed Rule concerned the distribution of prizes during a prize promotion. Section 310.4(a)(6) of the initially proposed Rule required any seller or telemarketer conducting such promotions to distribute all prizes or purported prizes offered within 18 months of the initial offer to any person. The Commission believes that this practice is adequately covered by the prohibition against misrepresenting any material aspect of a prize promotion in Section 310.3(a)(2)(v) of the revised proposed Rule. Because the practices included in this Section of the initially proposed Rule are addressed by other prohibitions, it has been deleted from the revised proposed Rule.

(g) *Reloading.* Section 310.4(a)(7) of the initially proposed Rule prohibited any seller or telemarketer from offering or selling goods or services through a telephone solicitation to a person who previously has paid the same seller for goods or services, until all terms and conditions of the initial transaction have been fulfilled, including but not limited to the distribution of all prizes or premiums offered in conjunction with the initial transaction.

This provision of the initially proposed Rule elicited nearly unanimous negative comments from industry representatives. The Commission learned from these comments that many legitimate businesses call their customers before full satisfaction has been made on a prior transaction. Indeed, cultivating established customers in this way is regarded as one of the most effective selling techniques by legitimate sellers. Commenters noted that the Section as proposed would preclude a seller or

[91] ATA at 7; CUCI at 7; DMA at 25; Spiegel at 4.

[92] ABA at 8; Citicorp at 8–9; MasterCard at 11.

[93] *See* 15 U.S.C. 45(a)(2); revised proposed Rule Section 310.1.

[94] Initially proposed Rule Section 310.4(a)(4); revised proposed Rule Section 310.4(a)(3).

[95] *See, e.g.,* IA DOJ at 13–15; USPS at 13; NAAG at 24. In fact, NACAA believes there should be an outright prohibition against contacting any consumer to offer these services. NACAA at 4.

[96] Chase at 4; Chemical at 6; MasterCard at 11.

[97] Washington at 17.

[98] AARP at 15–16. Fraudulent recovery rooms may use checks, not backed by sufficient funds for them to be paid by the out-of-town banks on which they are drawn, to show consumer victims that the money has been ''recovered.''

[99] NAAG at 24; DSA-Nev., Tab B at 8; NCL at 39–40. Both DSA-Nev. and NCL also believed that licensed attorneys should not be exempt from this Section of the Rule. The Commission does not wish to hinder legitimate activities by licensed attorneys to recover funds lost by consumers through fraudulent telemarketing, and thus does not believe this prohibition should be applied to their services.

[100] Revised proposed Rule Section 310.4(a)(4).

[101] DMA at 25.

[102] Prudential noted that this Section could cover a bank's offer to a consumer of pre-approved loans. The Commission believes that revised Section 310.1 will address Prudential's concerns by clarifying that banks are excluded from coverage of the Rule because they are outside of the Commission's jurisdiction under the FTC Act, 15 U.S.C. 45(a)(2).

telemarketer from calling customers to renew subscriptions, warranties, service contracts, and a host of other ongoing services prior to their expiration.[103] Commenters also noted that this prohibition would be particularly burdensome for large, diversified companies with multiple divisions, sales offices and product lines.[104]

Given the fact there is nothing about this practice, in and of itself, that is inherently injurious to consumers, and given the widespread use of this practice by legitimate telemarketers, the Commission has dropped from the revised proposed Rule any attempt to restrict this practice. Reloading is a problem when there is deception in the sales offer. Because such deception is prohibited by the revised proposed Rule under Section 310.3(a), a separate prohibition of ''reloading'' is unnecessary. Accordingly, it has been deleted from the revised proposed Rule.

(h) *The Use of Shills.* Section 310.4(a)(8) of the initially proposed Rule prohibited identifying a person as a reference for a business venture unless: (1) Such person actually purchased the business venture; (2) such person operated that business venture for at least six months, or the seller or telemarketer disclosed the length of time the person operated such business venture; and (3) such person did not receive consideration for any statements made to prospective business venture purchasers. As stated in the discussion of Section 310.2 of the definition of ''business venture,'' the Commission believes that consideration of such a prohibition is more appropriately included as part of its regulatory review of the Franchise Rule.

2. *Pattern of Calls.* Section 310.4(b)(1)(i) of the proposed Rule prohibited a seller or telemarketer from making a sales call to a person's residence more than once within any three month period. Many commenters stated that this was an unreasonable and arbitrary prohibition that was difficult to comply with, and that should be eliminated.[105] In addition, commenters noted that consumers already have the protections of the Telephone Consumer Protection Act [''TCPA''] rules, which require telemarketers to establish and maintain a ''do not call'' list of consumers who do not wish to be contacted by that seller.[106] Given the fact that calls more frequent than once per month are not, in and of themselves, injurious to consumers, and given the consumer protections afforded by the ''do not call'' requirements of the TCPA [107] and this Rule, the Commission agrees that this provision is unnecessary and has therefore deleted it.

In its place, the Commission proposes in revised Rule Section 310.4(b)(i) to prohibit any seller or telemarketer to cause any telephone to ring, or engage any person in telephone conversation, repeatedly or continuously with intent to annoy, abuse, or harass any person at the called number. Such a prohibition is included in the FDCPA, [108]and the legislative history of the Telemarketing Act states that the Commission should consider the FDCPA in establishing prohibited abusive acts or practices.[109]

Section 310.4(b)(1)(ii) of the initially proposed Rule set forth the prohibition on calling a person's residence when that person previously has stated that he or she does not wish to receive such a call made by or on behalf of the seller whose goods or services are being offered. The Commission continues to believe that such a limitation, which is fully consistent with and complementary to similar provisions under the TCPA,[110] will effectively implement the Telemarketing Act's directive to include in this Rule ''a requirement that telemarketers may not undertake a pattern of unsolicited telephone calls which the reasonable consumer would consider coercive or abusive of such consumer's right to privacy.'' [111] This Section did not elicit many comments; the only change made to this Section responds to the comments suggesting that the prohibition should apply to a particular person or telephone number, not to a residence (as the initially proposed version of this provision stated), because a residence may have more than one person who is a customer of a particular seller.[112] The revised proposed Rule states that the prohibition applies to calls made to a person, rather than a person's residence.

Section 310.4(b)(2) of the initially proposed Rule provided a limited safe harbor against liability for violating the ''do not call'' prohibitions included in Section 310.4(b)(1)(ii). This Section stated that a seller or telemarketer will not be liable for such violations once in any calendar year per person called if: (1) It has established and implemented written procedures to comply with the ''do not call provisions''; (2) it has trained its personnel in those procedures; (3) the seller, or the telemarketer acting on behalf of the seller, has maintained and recorded lists of persons who may not be contacted; and (4) any subsequent call is the result of administrative error.

Two changes have been made to this Section. First, some commenters suggested that the safe harbor should not be limited to a certain number of violations per consumer or per year.[113] These commenters maintained that if the other enumerated steps are taken by a telemarketer in a reasonable manner, and a call is made erroneously, a Rule violation should not be found. The Commission agrees, and has deleted this limitation to the safe harbor. Second, the safe harbor will apply if the subsequent call is the result of any error, not just an administrative error. This responds to concerns raised that unintentional or accidental calls should also be covered by the safe harbor.[114]

3. *Calling Time Restrictions.* The initially proposed Rule prohibited any telemarketer from calling a person's residence, without the prior consent of the person, at any time other than between 8:00 a.m. and 9:00 p.m. local time at the called person's location. The Commission included this provision in the initially proposed Rule in response to the Telemarketing Act's directive that the Rule should include ''restrictions on the hours of the day and night when unsolicited telephone calls can be made to consumers.'' [115] While some commenters suggested different time

[103] ATA at 7–8; ANA at 14; DMA at 27–28; MPA at 14–15; Cox at 9–10; DMSI at 6; Hearst at 2; MSSC at 20; NAA at 13–14; AMCI at 2 (motor club memberships); CUCI at 8; ASAE at 15–16 (association memberships); GE at 4–6; IBM at 19–22 (computer leases); NCTA at 11–12 (cable services); Viacom at 10–11.

[104] ANA at 15; DMA at 27; NRF at 31; AmEx at 1–2.

[105] ATA at 8; APAC at 6; DMA at 28; DSA at 15; MPA at 16–18; NRF at 33; PMAA at 75–77; CUCI at 8; Fingerhut at 25; ADS at 1; AmEx at 1–2; AT&T at 20; NCL at 45–46; APAC at 6; AMCI at 1; IBM at 23; ANA at 17.

[106] *See, e.g.,* ANA at 17; Franklin at 1; Olan at 13. The FCC's rules, established pursuant to the TCPA, 47 U.S.C. 227, are codified at 47 CFR 64.1200. The revised proposed Rule includes similar ''do not call'' protections at Section 310.4(b)(1)(ii), discussed *infra.*

[107] 47 U.S.C. 227.

[108] 15 U.S.C. 1692d(5).

[109] *See, e.g.,* House Report at 8. Moreover, commenters suggested that such a provision would be appropriate. *See, e.g., NAA at 20; Cox at 10 (abusive conduct involves multiple calls over a short period of time, such as five calls in a day, or ten calls in a week).*

[110] *See* 47 U.S.C. 227; 47 CFR 64.1200(e).

[111] 15 U.S.C. 6102(a)(3)(A).

[112] *See, e.g.,* NRF at 33; Pacesetter at 4.

[113] *See, e.g.,* IBM at 24; SBTC at 10–11.

[114] NRF at 35; PMAA at 83; MSSC at 21. Other commenters suggested that the term ''administrative error'' was too broad, and that a clear definition should be provided. NACAA at 5; NAAG at 27; USD at 5. The Commission believes that any error should be excused here, as long as the seller or telemarketer is complying in good faith with the other requirements of the safe harbor.

[115] 15 U.S.C. 6102(a)(3)(B).

restrictions,[116] the FCC has established these calling time hours in its regulations implementing the TCPA,[117] and the Commission has been presented with no compelling reasons to change them. Accordingly, no substantive changes to Section 310.4(c) are proposed.[118]

4. *Required Oral Disclosures.*

(a) *All outbound telephone calls.* The Telemarketing Act requires the Commission to include in this Rule the following:

A requirement that any person engaged in telemarketing for the sale of goods or services shall promptly and clearly disclose to the person receiving the call that the purpose of the call is to sell goods or services and make other such disclosures as the Commission deems appropriate.[119]

The initially proposed Rule, at Section 310.4(d)(1)(i), implemented this legislative directive by requiring all outbound telephone calls (or telephone solicitations, as they previously were called), to begin with the disclosure of the caller's true first and last name, the seller's name, and a statement that the purpose of the call is to sell goods or services. The divergence between the statutory language and that of the initially proposed Rule elicited significant comment.

Many industry representatives objected to these disclosures being required ''at the beginning,'' rather than ''promptly and clearly.'' [120] According to these commenters, requiring disclosures at the beginning disturbs the normal flow of a telephone call,[121] allows no time for a seller to establish, or reestablish, a relationship with the consumer,[122] infringes on the seller's ability to design and implement effective telemarketing sales presentations,[123] and is in effect a ''kill message'' that will result in most consumers hanging up when they hear the required disclosures.[124]

After considering these comments, the Commission has determined that requiring these disclosures ''at the beginning'' may be too rigid a standard for achieving the statutory purpose of providing important information to consumers while permitting the use of the telephone in making sales.[125] The revised proposed Rule adheres to the statutory requirement that the disclosures be prompt and clear. By adhering more closely to the statutory language, the Commission intends to permit some flexibility in the seller's telemarketing presentation. For example, a prompt disclosure would not preclude the seller or telemarketer from establishing some initial rapport with the customer before stating the purpose of the call. However, in ''multiple purpose calls,'' where one purpose is to sell goods or services, the sales purpose must be disclosed promptly.

The requirement that all outbound telephone calls include the disclosure of the caller's true first and last name also elicited significant comment. Commenters noted that ''desk names'' are commonly used in the industry to protect the safety and privacy of employees, and to protect against potential prejudice or harassment.[126] Upon reconsideration, the Commission has determined that disclosure of the seller's identity is sufficient. Therefore, disclosure of the caller's identity need not be included in this Rule.

In addition to the disclosure of the identity of the seller and the fact that the purpose of the call is to sell goods or services, Section 310.4(d) of the revised proposed Rule now requires the prompt and clear disclosure of the nature of the goods and services that are the subject of the call. The Commission revised the language of Section 310.4(d) to more accurately reflect language from Section 3(a)(3)(C) of the Telemarketing Act setting forth those additional disclosures.

Section 310.4(d)(1)(ii) of the initially proposed Rule required a number of disclosures in any telephone solicitation that included a charitable solicitation.[127] Upon careful review of the comments, it is clear that separate treatment of such charitable solicitations is unnecessary. As ATFA suggested at the workshop, the sale of goods or services that includes a representation that a portion of the money paid for such goods or services will go to charity could be treated under the Rule as a sale of goods or services, rather than a charitable solicitation.[128] As a result, such a sale would be covered under the Rule without having to expressly cover charitable solicitations or donations. Because the initially proposed Rule attempted to encompass these specific types of sales, and given that such sales will be covered under the Rule's definition of ''telemarketing,'' the Commission has decided to delete Section 310.4(d)(1)(ii) from the revised proposed rule.

Additionally, many comments indicated that former Section 310.4(d)(1)(ii) engendered a great deal of confusion on the part of nonprofit entities as to their coverage under the Rule. In including former Section 310.4(d)(1)(ii), the Commission did not intend to regulate nonprofit entities.[129] The Commission is mindful of the limitations on its jurisdiction in this area. Specifically, Section 4 of the FTC Act gives the Commission jurisdiction over corporations that are operated for their own profit or that of their members and over the business aspects of the activities of organizations serving both nonprofit and for-profit purposes.[130] Federal courts have construed this to bar the Commission from suing any *bona fide* nonprofit organization under the FTC Act, thereby removing most charitable organizations from the scope of the FTC's authority.[131] Section 6(a) of

[116] DSA-Nev Tab B at 11 (7 a.m. to 10 p.m.); Monex at 15 (no restrictions for the precious metals market); NACAA at 5 and GA OCA at 2 (5:00 p.m. to 9:00 p.m. to protect vulnerable older consumers); NAAG at 27 (no calls before noon on Sunday).

[117] *See* 47 CFR 64.1200(e)(1).

[118] Certain commenters suggested that the safe harbor provisions of Section 310.4(b)(2) should apply to the calling time restrictions as well as the ''do not call'' requirements. *See, e.g.,* NRF at 35; ARDA at 31. The Commission believes that the calling time restrictions do not present the administrative compliance difficulties that the ''do not call'' restrictions impose, and therefore does not believe a safe harbor is necessary here.

[119] 15 U.S.C. 6102(a)(3)(C).

[120] ATA at 9; ANA at 21; NRF at 36; DMA at 30; Chemical at 7; CUCI at 9; Gannet at 4; Olan at 16.

[121] *See, e.g.,* NRF at 36.

[122] *See, e.g.,* ADS at 2.

[123] Ann Arbor at 2 (with numerous other newspapers submitting a substantially similar comment).

[124] *See, e.g.,* Citicorp at 8; Time Warner at 37–38. Not all industry representatives agreed. One telemarketer stated that requiring the disclosures at the beginning is very reasonable. ''Rather than impeding business, disclosure of the information proposed by the Commission adds credibility to the legitimacy of the caller and increases consumer confidence [and] responsiveness to its telemarketing calls.'' TMGI at 2, 4.

[125] The Senate Report stated that the ''prompt'' disclosure requirement was added to the Telemarketing Act to address concerns raised by the market research industry (those who conduct surveys and public opinion polls without selling goods or services) that telemarketing calls should not be made under the guise of being calls solely for survey research or similar purposes. *See* Senate Report at 4.

[126] *See, e.g.,* ANA at 21; Cox at 7–8; APAC at 6; ADS at 2.

[127] The definition of ''goods or services'' in Section 310.2(j) of the initially proposed Rule included a statement that the term included ''any charitable service promoted in conjunction with an offer of a prize, chance to win a prize, or the opportunity to purchase any other goods or services.''

[128] *See* Tr. at 188–93 (ATFA).

[129] *See generally* ATFA; NFN.

[130] *See American Medical Ass'n v. FTC,* 94 F.T.C. 701, 982–93, *aff'd,* 638 F.2d 443, 448 (2d Cir. 1980), *aff'd mem. by equally divided court,* 455 U.S. 676 (1982).

[131] This jurisdictional limitation, however, does not prevent the Commission from suing a for-profit company that engages in deceptive practices to solicit charitable contributions from consumers. To this end, the Commission has recently sued several allegedly deceptive ''telefunders''—companies that solicit charitable contributions by telephone—which allegedly misrepresented the use to which donations would be directed and allegedly misrepresented the value of certain prizes. *See FTC*

the Telemarketing Act states that ''no activity which is outside the jurisdiction of [the FTC Act] shall be affected by this Act.'' [132] Accordingly, as explicitly stated in Section 310.1 of the revised proposed rule, the jurisdictional limitations of Section 4 of the FTC Act, including those regarding nonprofit organizations, will apply to the Telemarketing Sales Rule.

(b) *Verification calls.* The initially proposed Rule stated that if a caller verifies a telemarketing sale, that caller must repeat certain disclosures.[133] Many commenters argued forcefully that this Section was unnecessary and unduly burdensome, requiring duplicative disclosures that would add to the cost of the call and annoy potential customers.[134] In addition, commenters stated that this disclosure would discourage firms from making verification calls, due to increased costs.[135] After considering these comments, the Commission has determined that requiring duplicative verification disclosures is unnecessary and would unfairly burden legitimate telemarketers. It has therefore deleted this Section from the revised proposed Rule.

(c) *Outbound telephone calls that include a prize promotion.* The initially proposed Rule required the following three additional oral disclosures for any telemarketing that includes a prize promotion: (1) The fact that no purchase or payment is necessary to win; (2) the verifiable retail sales price of each prize offered, or a statement that the retail sales price of the prize offered is less than $20.00; and (3) the odds of winning each prize offered.[136]

The comments elicited by these requirements stressed the unnecessary costs that would result from duplicative disclosure requirements.[137] The Commission wishes to avoid imposing unnecessary requirements for oral disclosures that increase both the length and the cost of calls without a very clear consumer benefit.[138] Because the benefit to be derived from repeated disclosures of the same information is questionable, the Commission has narrowed the amount of information that must be disclosed orally. Oral disclosures now encompass only information that promises a clear-cut consumer benefit and that is not outweighed by the costs it imposes on legitimate industry. The revised proposed Rule requires a telemarketer making an outbound telephone call which includes a prize promotion to disclose clearly, in addition to the other disclosures required under revised proposed Rule Section 310.4(d), the fact that no purchase is necessary to win.

The Commission believes that this disclosure is so critical to consumer protection in a prize promotion that it should be stated during an outbound telephone call. In addition, the Commission, in response to concerns raised by NAAG, has specified in the revised proposed Rule that this disclosure must be made before the prize is described to the person called.[139] Such a disclosure will clearly inform consumers that a true, legitimate ''prize'' awarded in a game of chance does not require any purchase.[140] This disclosure will help dispel the false information provided during fraudulent prize promotions that a consumer must purchase some item in order to win the ''fabulous'' prize offered. In order to make this ''no purchase necessary'' disclosure meaningful, the revised proposed Rule also requires the telemarketer to disclose the no-purchase entry method for the prize promotion, if requested by the person called.

(d) *Outbound telephone calls that include a premium.* The initially proposed Rule required any telemarketing that includes an offer of a premium to make the additional disclosure of the verifiable retail sales price of such premium or comparable item, or a statement that the retail sales price of the premium is less than $20.00.[141] A number of commenters stated that this Section should be eliminated. They claimed that many premiums offered by legitimate telemarketers generally are not available for retail sale, and attempting to determine a retail sales price may be difficult and costly. They also predicted that this added cost may result in the elimination of premiums being offered, to the detriment of consumers.[142]

The Commission is persuaded by these arguments; in and of itself, non-disclosure of the value of an offered premium is not likely to be injurious to consumers, and imposition of the potential costs associated with such a disclosure requirement is not justified. The prohibition against misrepresentations in Section 310.3 is sufficient to protect consumers against false and misleading claims about the value of a premium.

5. *Other Required Disclosures.* The initially proposed Rule prohibited any seller or telemarketer conducting a prize promotion from requesting or accepting any payment from a person without first providing that person with a written disclosure, in duplicate, and receiving from that person a written acknowledgement that the person has read the disclosure.[143] Numerous commenters stated that such a written acknowledgement requirement would effectively ban prize promotions in telemarketing sales by increasing costs and negating the efficiency of those sales.[144] The Commission is persuaded that such an outcome would limit consumers' choices and would be inconsistent with Commission policy. Prize promotions in telemarketing, in and of themselves, are not deceptive, do not cause injury to consumers, and may, in fact, provide consumer benefits. The Commission has determined that these requirements would likely produce nominal consumer benefits that would be outweighed by the potential detrimental effects, and has therefore dropped them from the revised proposed Rule.

The initially proposed Rule also imposed written disclosure requirements on investment opportunities very similar to those for prize promotions. Specifically, any seller or telemarketer selling an investment opportunity was prohibited from requesting or accepting any payment from a person without first providing that person with a written disclosure, in duplicate, and receiving from that person a written acknowledgement that the person had read the disclosure.[145] Industry

v. The Baylis Co., No. 94–0017–S-LMB (D. Idaho 1994); *FTC v. NCH, Inc.,* No. CV-S–94–00138–LDG (LRL) (D. Nev. 1994); *FTC v. International Charity Consultants,* No. CV-S–94–00195–DWH (LRL) (D. Nev. 1994); *FTC v. Heritage Publishing,* No. LR-C–94–416 (E.D. Ark. 1994). In addition, the Commission may sue a sham charity that is actually a for-profit enterprise. *FTC v. Voices for Freedom,* No. 91–1542–A (E.D. Va. July 13, 1992) (consent decree entered).

[132] 15 U.S.C. 6105(a).

[133] Section 310.4(d)(2) of the initially proposed Rule.

[134] ATA at 9; MPA at 20–21; ARDA at 33; NAA at 19; Spiegel at 5; ALIC at 3; MSSC at 22.

[135] AT&T at 22–23; MCI at 12; PCH at 4; SBTC at 13.

[136] Initially proposed Rule Section 310.4(d)(3).

[137] *See generally* PMAA, DMA; IMSP.

[138] *See, e.g.,* MPA at 21–22.

[139] NAAG at 28–29.

[140] *See e.g.,* 18 U.S.C. 1301. Additionally, PMAA, stated during the workshop that such a requirement would not be overly burdensome and would accurately distinguish deceptive prize promotions from legitimate prize promotions. Tr. at 608–10 (PMAA).

[141] Initially proposed Rule Section 310.4(d)(4).

[142] *See, e.g.,* MPA at 22–23; NAA at 19–20; MasterCard at 13–14; MBNA at 1.

[143] Initially proposed Rule Section 310.4(e)(1).

[144] *See, e.g.,* DMA at 33; MPA at 23–24; NRF at 38; PMAA at 49–51; CUCI at 10; IBM at 26; ITI at 8–10; Spiegel at 5–6; ADS at 3; SDRA at 1. In fact, one commenter noted that 73 percent of prize *winners* do not return an affidavit permitting the distribution of prizes to them. DW&Z at 2.

[145] Initially proposed Rule Section 310.4(e)(2).

representatives again stated that a signed acknowledgement from consumers is unjustifiably burdensome in advance of all investment transactions.[146] They also stated that the delay caused by this requirement is unfair to both the customer and the seller in certain volatile markets.[147]

After reviewing the comments in this area, and upon further reflection, the Commission, for reasons similar to those that prompted deletion of the written prize promotion disclosures, has deleted requirements for additional written disclosures for telemarketing investment opportunities. While the Commission is mindful that both prize promotions and investment opportunities are a major area of telemarketing fraud,[148] the costs imposed on legitimate industry by these mandatory disclosures is not justified. In addition, the prohibitions on misrepresentations, as well as the disclosures required before a customer pays for goods or services, included in Section 310.3 are sufficient to prohibit the deceptive conduct found in the telemarketing of prize promotions and investment opportunities.

6. *Distribution of Lists.* The initially proposed Rule prohibited any person who is subject to any federal court order resolving a case in which the complaint alleged a violation of certain provisions of the Rule, and in which the court did not dismiss or strike all such allegations from the case, from selling, renting, publishing, or distributing any list of customer contacts from that person.[149] Industry commenters stated that the original proposal was too great a penalty for Rule violations, would preclude settlements of law enforcement actions, and should be eliminated.[150] On the other hand, law enforcement and consumer representatives commented that the proposed provision does not go far enough, and should extend to all rule violations and to FTC enforcement actions.[151]

After considering the comments, the Commission believes that such a prohibition is better left to the discretion of law enforcement agencies to seek, and the courts to order, in individual law enforcement actions. This Section therefore has been deleted from the revised proposed Rule.

Section 310.5 Recordkeeping Requirements

The initially proposed Rule required any seller or telemarketer to keep certain records relating to telemarketing activities for a period of 24 months from the date the record is produced.

Many industry commenters stated that the 24-month retention period was burdensome and suggested that the period be shortened.[152] Others suggested that the recordkeeping provision be dropped altogether because Congress did not mandate that records be kept,[153] and because fraudulent telemarketers will most likely ignore the requirements. Those commenters suggested that recordkeeping requirements would only burden legitimate business.[154] On the other hand, law enforcement and consumer representatives commented that the recordkeeping provisions would be extremely helpful in preserving evidence of compliance, in identifying customers who may have been injured, and in identifying persons who might have been involved in any deceptive or abusive telemarketing practices.[155] In fact, several commenters suggested that the record retention period be lengthened to 36 months, which would parallel the IRS retention requirements.[156]

After careful consideration of the comments, the Commission has decided to keep a recordkeeping requirement in the revised proposed Rule. Without the required records, it would be difficult to ensure that sellers and telemarketers are complying with the requirements of the revised proposed Rule, or identify persons who are involved in the practices, or identify customers who may have been injured.

The Commission also has decided to leave the record retention period at 24 months in the revised proposed Rule. A record retention period shorter than a two-year period would be inadequate for the Commission and the States to complete investigations of noncompliance. Consumers who complain to an agency about alleged deceptive or abusive telemarketing practices often do not do so immediately. Therefore, there may already be a substantial ''lag time'' between the time the alleged violations occur and the time the Commission learns of the alleged violations. A two-year record retention period allows the Commission and State law enforcement agencies to gather information needed to pursue enforcement actions and to identify those persons who have most recently suffered injury from the alleged deceptive or abusive telemarketing practices.

The Commission is mindful, however, of the burden on business in maintaining these records. Therefore, the revised proposed Rule incorporates many of the suggestions from industry on how to minimize the recordkeeping burden.

First, the revised proposed Rule specifies that the records may be kept ''in any form.'' This language addresses the suggestions from many commenters that the burden could be reduced if the sellers and telemarketers could keep the required records in electronic storage.[157]

Second, the revised proposed Rule specifies that sellers and telemarketers need to retain only *substantially different* advertising, brochures, telemarketing scripts, and promotional materials. Several commenters proposed this change in order to reduce the paper burden of maintaining large quantities of virtually identical documents.[158]

Third, the revised proposed Rule incorporates the suggestions of many commenters by requiring sellers and telemarketers to maintain a record only of the *last known* address of prize recipients, customers, and of current and former employees.[159]

Fourth, the revised proposed Rule sets a *de minimis* amount of $25 for record retention on prizes, as was suggested by at least one commenter.[160] Sellers and telemarketers will not have to maintain records on prize recipients and prizes awarded for prizes that have a value less than $25.00.

Fifth, the revised proposed Rule adds the requirement that sellers and telemarketers maintain a record of any fictitious name used by any current or former employee directly involved in telemarketing sales. This requirement would prevent deceptive telemarketers from hiding behind a fictitious identity and would aid law enforcement agencies in identifying possible defendants.

Some commenters requested clarification of certain recordkeeping

[146] *See, e.g.,* A-Mark at 2, 11–12; AFSA at 7–8.

[147] *See, e.g.,* Monex at 16–17.

[148] Approximately 60 percent of all telemarketing complaints received by NCL involve prize offers, while investment opportunities account for the greatest dollar volume of losses reported. NCL at 49–51.

[149] Initially proposed Rule Section 310.4(f).

[150] APAC at 7; DMA at 34; MSSC at 24–25; Spiegel at 6; Monex at 19; NRF at 38–39.

[151] AARP at 22; NACAA at 5 (apply it to state orders as well); GA OCA at 2.

[152] *See, e.g.,* DMA at 35; ANA at 24; IBM at 27; Olan at 14; NRF at 40; MSSC at 25; Ann Arbor at 2.

[153] Section 3(a)(3) of the Telemarketing Act authorizes the Commission to include recordkeeping requirements in the Rule. 15 U.S.C. 6102(a)(3).

[154] *See, e.g.,* RPI at 1; BSA at 14.

[155] *See, e.g.,* NCL at 54; USPS at 24; AARP at 23; NAAG at 36; CFA at 6.

[156] *See, e.g.,* NAAG at 36–37; CFA at 6.

[157] *See, e.g.,* ANA at 24; NRF at 40; Olan at 14; NCL at 54; IBM at 27–28; USPS at 24.

[158] *See, e.g.,* DMA at 35; Tr. at 761, 767, and 769.

[159] *See, e.g.,* ATA at 9–10; NRF at 40; Olan at 14; SCIC at 6; IBM at 27.

[160] *See* ARDA at 36–37.

requirements in order to reduce the burden on business. For example, several parties read the recordkeeping requirements to require them to maintain records of *all* customer contacts, regardless of whether the customer actually made a purchase.[161] They recommended that businesses only be required to maintain records relating to customers who actually made a purchase of goods or services. The Commission did not add clarifying language addressing this concern because it believes that the plain language in Section 310.5(a)(3) of the revised proposed Rule is sufficiently clear that only records relating to *actual sales* need be maintained. That Section specifically requires information to be maintained regarding the sales transaction: the identity of the goods or services purchased, the fulfillment, and the amount paid by the customer.

Other commenters asked that, in connection with the requirement to maintain employee records, the revised proposed Rule more clearly define who is ''directly involved in telephone sales'' in order to minimize the burden of maintaining records on employees who might be only tangentially involved in telemarketing activities.[162] In addition, some commenters asked that the Commission clarify that records on former employees be kept only on those persons who are employees on or after the effective date of the final Rule.[163]

The revised proposed Rule does not add clarifying language addressing these concerns. The Commission believes that the Rule is sufficiently clear about the types of telemarketing activities that would be subject to the Rule's provisions as to minimize the number and type of employees on whom records must be maintained. In addition, the Commission intends that any Rule requirements, including recordkeeping requirements, will commence with the effective date of the final Rule. Therefore, any records relating to employees and former employees would be required only for those persons who are or become employees or former employees on or after the effective date of the Rule.

The revised proposed Rule incorporates suggestions from some commenters to clarify that the seller and telemarketer need not duplicate those records that are already maintained in the ordinary course of business.[164] Additionally, Section 310.5(c) of the revised Rule permits a seller and telemarketer to allocate between themselves, by written agreement, responsibility for complying with the recordkeeping requirements. The revised proposed Rule further clarifies a seller's and a telemarketer's recordkeeping responsibilities. Under revised Section 310.5(d), absent a written agreement described in Section 310.5(c), a seller is responsible for complying with Sections 310.5(a) (1)–(3) and a telemarketer is responsible for complying with Section 310.5(a)(4). Revised Section 310.5(d) allows sellers and telemarketers to keep the required records in any manner, format, or place as they keep such records in the ordinary course of business.

Several commenters expressed concern that sellers and telemarketers may not have access to all of the information required to be maintained, and requested that the Rule set out which parties should have responsibility for maintaining certain types of records.[165] After considering these comments, the Commission has determined that the language in Section 310.5(b) is already sufficiently clear to convey that the parties may enter into a written agreement allocating responsibility for maintaining records. Thus, there is nothing in Section 310.5(b) that would prohibit the parties from maintaining only those records to which they would normally have access, as long as each of the required types of information is maintained by at least one of the parties. Indeed, several commenters supported this Section, noting that it strikes a reasonable balance between maintaining necessary documentation and avoiding overly burdensome requirements, as well as noting that it is consistent with the contractual nature of the relationship between sellers and telemarketers.[166]

Finally, the Commission has deleted former Section 310.5(a)(5) that required that ''any written notices, disclosures, and acknowledgements required to be provided or received under this Rule'' be kept. The Commission deleted this Section because the revised proposed Rule no longer requires specific written disclosures and acknowledgements.

Section 310.6 Exemptions

Section 310.6 of the initially proposed Rule exempts certain acts or practices from the Rule's provisions. This Section prompted considerable comment.

Law enforcement and consumer groups cautioned against any exemptions because of the additional burden of proof exemptions place on law enforcement and because of the potential danger that deceptive telemarketers will seize upon any perceived loophole to avoid coverage under the Rule.[167] At the workshop conference, DSA-Nev. explained Nevada's negative experience with legislative exemptions. DSA-Nev. stated that Nevada's telemarketing legislation exempted charitable solicitations. Shortly after its enactment, Nevada saw fraudulent telemarketers rushing to switch their operations to fraudulent ''telefunding'' in order to take advantage of that exemption.[168]

The business community, however, suggested that the Commission formulate exemptions that specifically differentiate between deceptive and legitimate telemarketing because of the broad coverage of the initially proposed Rule.[169] Industry suggested that the Commission take one or both of the following courses: (1) narrow the definition of ''telemarketing'' to include only outbound telephone calls; [170] or (2) if the Commission decides to continue including inbound telephone calls, set forth additional exemptions that would allow the legitimate telemarketing industry to operate without the restraints of additional regulation.[171]

After careful consideration, the Commission has decided that narrowly-tailored exemptions are necessary to avoid unduly burdening legitimate businesses and sales transactions that Congress specifically intended not to cover under the Rule. Section 310.6 enumerates these exemptions. The Commission determined the advisability of each exemption after considering the following factors: (1) Whether the conduct or business in question already is regulated extensively by Federal or State law; (2) whether Congress intended that a certain type of telemarketing activity be exempt under the Rule; (3) whether, based on the Commission's enforcement experience, the conduct or business lends itself easily to deception or abuse; and (4) whether requiring businesses to comply with the Rule would be unduly burdensome when weighed against the likelihood that deceptive sellers or telemarketers would use an exemption to circumvent the Rule's coverage.

[161] *See, e.g.,* Wachovia at 3; ARDA at 37; IBM at 27.

[162] *See, e.g.,* DMA at 35–36; ARDA at 37.

[163] *See, e.g.,* NB at 5; Citicorp at 9; ARDA at 37.

[164] *See, e.g.,* Comcast at 6.

[165] *See, e.g.,* MPA at 25; DSA at 21; OPC at 4.

[166] *See, e.g.,* NRF at 41; ARDA at 37–38.

[167] *See, e.g.,* NCL at 54–55; NAAG at 37. *See also* Tr. at 254–256, 704, and 725.

[168] Tr. at 82–84.

[169] *See, e.g.,* NRF at 9; Time Warner at 4–7; DMA at 10–12. *See also* Tr. at 79–81, 702–703, and 710–711.

[170] *See, e.g.,* MPA at 8–10; MSSC at 9–10; Olan at 19–20; ANA at 10; ACRA at 6–7.

[171] *See, e.g.,* NRF at 20–21; ICTA at 31–35; Time Warner at 28.

The revised proposed Rule incorporates the suggestions of numerous commenters and exempts transactions that are subject to extensive requirements under other Commission rules.[172] Section 310.6(a) exempts pay-per-call services subject to the FTC's 900 Number Rule.[173] Additionally, the Commission has clarified the definition of ''investment opportunity'' in Section 310.2(j) of the revised proposed Rule to expressly state that the term does not include sales of franchises subject to the FTC's Franchise Rule.[174]

Many commenters suggested exemptions based on other FTC rules, statutes, and regulations, for example, the Negative Option Rule, 16 CFR Part 425, FDCPA, 15 U.S.C. 1692, and the TILA, 15 U.S.C. 1601 *et seq.*).[175] The Commission believes that changing the phrase ''induce payment'' to ''induce purchase'' in the definition of ''telemarketing'' clarifies that debt collection practices are not covered by this Rule. With regard to credit statutes such as the TILA and the Consumer Leasing Act [''CLA''], 15 U.S.C. 1667, the Commission believes that the revised proposed Rule's disclosure requirements do not conflict or overlap with those statutes. It is therefore unnecessary to specifically exempt transactions subject to the TILA and CLA from the provisions of this Rule. Similarly, the Commission believes that the disclosure provisions of the Negative Option Rule do not conflict or overlap with the provisions of this Rule and therefore there is no need to exempt those transactions.

Other commenters asked that the Commission exempt those entities that are not subject to the FTC Act.[176] The revised proposed Rule has added language to Section 310.1 that clarifies the scope of the Rule in accordance with those comments. Many of these commenters, however, also asked that agents of exempt entities or of entities engaging in exempt activities similarly be exempted from the Rule's provisions.[177] The Commission rejects such an extension. Exemptions under the FTC Act are either based on ''status,'' or a specific activity.[178] Exempting agents is contrary to the Commission's assertion of its jurisdiction under established case law. This Rule will cover sellers and telemarketers who do not fall within those status or activity-based exemptions of the FTC Act. Moreover, the Commission's decision is consistent with Congressional intent that the Telemarketing Act neither expand nor contract the Commission's authority.[179]

Section 310.6(b) of the revised proposed Rule exempts ''telephone calls in which the sale of goods or services is not completed, and payment or authorization of payment is not required, until after a face-to-face sales presentation by the seller during which the customer has the opportunity to examine the goods or services offered.'' In addition to Congress' clear intent not to cover such transactions,[180] numerous commenters explained how face-to-face sales are not the type of telemarketing transactions that Congress was concerned about in passing the Telemarketing Act.[181] The Commission agrees that such face-to-face contacts where consumers have the opportunity to examine the goods or services should be exempt under the Rule. This exemption also applies to telephone contacts made subsequent to a face-to-face sales presentation to the extent such contacts are for the sole purpose of consummating the sale of goods or services that the customer had the opportunity to examine.

Section 310.6(c) of the revised proposed Rule exempts telephone calls initiated by a customer that are not the result of any solicitation by the seller or telemarketer. The Commission added this exemption to address many commenters' concerns that the definition of telemarketing might include an inbound call from a customer to make hotel, airline, car rental or similar reservations, to place carry-out or restaurant delivery orders, obtain information or customer technical support, or other incidental uses of the telephone that were not in response to a direct solicitation.[182] This exemption is consistent with Congress' intent not to cover transactions involving incidental use of the telephone.[183]

The Commission has replaced former Section 310.6(c) with revised Sections 310.6(d) and (e). Section 310.6(c) of the initially proposed Rule had exempted telephone contacts made by a person ''when there has been no initial sales contact directed to that particular person, by telephone or otherwise, from the seller or telemarketer.'' Many commenters expressed confusion over what was meant by ''initial sales contact'' or ''directed to that particular person,'' and requested that the Commission clarify the scope of this exemption.[184] The Commission agrees that clarification is needed as to the scope of this exemption. Revised proposed Sections 310.6(d) and (e) now treat separately calls prompted by advertisements in any media, other than direct mail solicitations, and calls prompted by direct mail solicitations. Revised Section 310.6(d) exempts ''telephone calls initiated by a customer in response to an advertisement through any media, other than direct mail solicitations; provided, however, that this exemption does not apply to calls initiated by a customer in response to an advertisement relating to investment opportunities, goods or services described in Sections 310.4(a)(2)–(3), or advertisements that guarantee or represent a high likelihood of success in obtaining or arranging for extensions of credit, if payment of a fee is required in advance of obtaining the extension of credit.'' The revised language of Section 310.5(d) addresses some commenters' concerns that calls in response to television commercials, infomercials, magazine and newspaper advertisements, and other forms of mass media advertising would be covered by the Rule.[185] The Commission does not intend that telephone contacts in response to general media advertising be covered under the Rule. Rather, deceptive general media advertising will continue to be subject to enforcement actions under the FTC Act.

On the other hand, the Commission knows that some fraudulent sellers and telemarketers use mass media or general advertising to entice their victims to call, particularly in relation to the sale of investment opportunities, specific credit-related programs, and recovery rooms. Given the Commission's

[172] *See, e.g.,* IFA at 4; Time Warner at 44–45; CHC at 7; ISA at 20–27; PMAA at 34–38.

[173] ''Trade Regulation Rule Pursuant to the Telephone Disclosure and Dispute Resolution Act of 1992,'' 16 CFR Part 308.

[174] ''Disclosure Requirements and Prohibitions Concerning Franchising and Business Opportunity Ventures,'' 16 CFR Part 436.

[175] *See, e.g.,* BOB at 2; ANA at 14; ABA at 3; ACA at 1; Advanta at 2; MBNA at 1.

[176] *See, e.g.,* GHAA at 3; AT&T at 6–13; AmEx at 3; ABA at 1; BOB at 1; ASAE at 2; SCIC at 7.

[177] *See, e.g.,* ABA at 1; Advanta at 1; Chase at 2; Citicorp at 3; NFN at 2.

[178] *See* 15 U.S.C. 44 and 45(a)(2). For examples of status exemptions, see *FTC v. Green Tree Acceptance Corp.,* No. CA–4–86–469–K, slip op. (N.D. Tx. Sep. 30, 1987); *Official Airlines Guides, Inc. v. FTC,* 630 F.2d 920 (2d Cir. 1980); *FTC v. Miller,* 549 F.2d 452 (7th Cir. 1977); *Breen Air Freight, Ltd. v. Air Cargo, Inc.,* 470 F.2d 767 (2d Cir. 1972). For an example of an activity exemption, see *Community Blood Bank of Kansas City, Inc. v. FTC,* 405 F.2d 1011 (8th Cir. 1969).

[179] *See* Senate Report at 14.

[180] House Report at 7; Senate Report at 7–8.

[181] *See, e.g.,* DSA.

[182] *See, e.g.,* ACRA at 6; DSA at 5; Olan at 19–20; Viacom at 6–7; MCI at 5–6.

[183] Senate Report at 8.

[184] *See, e.g.,* ANA at 10–11; Viacom at 6–7; Olan at 27; AFSA at 3–4; QVC at 13–14; DMA at 37; MPA at 9; Time Warner at 26–27.

[185] *See, e.g.,* INTV at 4; QVC at 2–3; NAA at 10–12; ANA at 10–11.

experience with these fraudulent telemarketing schemes being marketed through television commercials, infomercials, magazine and newspaper advertisements, and other forms of mass media advertising, the Commission has excluded these activities from the general media advertising exemption.

The revised proposed Rule no longer excludes ''prize promotions'' from the general media exemption because the Commission believes that the majority of fraudulent prize promotions do not employ mass media or general advertising. In addition, the revised proposed Rule has dropped ''employment services'' as one of the exceptions to the general media exemption. Although the Commission and other law enforcement agencies have brought actions against advance fee employment services that use mass media advertising, many legitimate employment services use the same type of mass media advertising and also require advance fees. The Commission believes that neither the legislative history of the Telemarketing Act nor the rulemaking record for the Rule provide a sufficient basis for singling out the employment service industry for an exception to the general media advertising exemption. Deceptive employment opportunity advertising will, however, still be subject to enforcement actions under the FTC Act.

Section 310.6(e) exempts telephone calls initiated by a customer in response to ''a direct mail solicitation that clearly and conspicuously discloses all material information listed in Section 310.3(a)(1) of this Rule for any item offered in the direct mail solicitation; provided, however, that this exemption does not apply to calls initiated by a customer in response to a direct mail solicitation relating to investment opportunities, goods or services described in Sections 310.4(a)(2)–(3), or direct mail solicitations that guarantee or represent a high likelihood of success in obtaining or arranging for extensions of credit, if payment of a fee is required in advance of obtaining the extension of credit.'' Some commenters suggested that the Commission include under the general media exemption all direct mail solicitations—which, in effect, would have excluded all inbound calls from coverage under the Rule. However, the Commission's enforcement experience demonstrates that deceptive telemarketers frequently use direct mail solicitations as an integral part of their fraudulent schemes. Inbound calls prompted by such solicitations frequently result in the caller being subjected to the deceptive practices the Telemarketing Act is designed to address. Therefore, the Commission has determined that including all direct mail solicitations within the general media exemption is unworkable. The Commission acknowledges, however, that most direct mail solicitations are not deceptive. In particular, the likelihood of deception is greatly diminished when direct mail solicitations contain all material information about the offered goods or services. Revised Section 310.6(e) therefore exempts only those direct mail solicitations that disclose, clearly and conspicuously, all the information specified in Section 310.3(a)(1) as material to a person's purchase decision. As in the general media exemption, revised Section 310.6(e) excludes from this exemption direct mail solicitations relating to investment opportunities, specific credit-related programs, and recovery rooms because of the Commission's enforcement experience in these areas.

The Commission decided to delete the ''*de minimis*'' exemption for incidental telemarketing activity contained in former Section 310.6(a). Comments indicate that neither the law enforcement nor the business communities found such an exemption helpful or workable. Law enforcement agencies believed that the exemption would hamper quick law enforcement, while providing a loophole for fraudulent telemarketers who specialize in high-price scams directed at only a few victims.[186] The business community found the exemption to be so restrictive that it would be of little significance.[187] The Commission agrees with those observations and believes that revisions made elsewhere in the revised proposed Rule, including exemptions in Section 310.6, eliminate the need for this specific exemption.

Comments about the initially proposed ''business-to-business'' exemption [188] fell to opposite extremes. Several industry commenters asked that the exemption be expanded to include entities other than businesses.[189] Other commenters asked that the Commission clarify the type of office supplies excluded from the exemption.[190] Still other industry commenters suggested that a ''business-to-business'' exemption was only defensible if provided on an across-the-board basis, without exceptions.[191] On the other hand, law enforcement and consumer agencies urged the Commission to exclude additional goods or services from the business-to-business exemption.[192]

Because the Commission has extensive enforcement experience pertaining to deceptive telemarketing directed to businesses, it does not believe that an across-the-board exemption for business-to-business contacts is appropriate. The Commission does agree, however, that clarification of the goods or services that are *excluded* from this exemption is necessary. Revised Section 310.6(f) states that only the retail sale of *nondurable* office or cleaning supplies are excluded from the exemption.[193]

Many commenters suggested an exemption for transactions where the customer is able to examine the goods or services before paying for them but does not involve a face-to-face sales presentation.[194] The Commission does not believe such an exemption is necessary, given the changes elsewhere in the revised proposed Rule, as noted above.

Many commenters suggested an exemption based on a prior business relationship with the customer.[195] The Commission does not believe that such an exemption would be workable in the context of telemarketing fraud. A fraudulent telemarketer need only obtain an initial purchase from an unsuspecting victim to claim a ''prior business relationship'' exemption.

In addition, many commenters suggested an exemption for ''established businesses,'' including businesses that offer basic customer protection policies such as a moneyback guarantee.[196] The Commission agrees with the comments of other law enforcement agencies that such broad-based ''safe harbor'' provisions are not appropriate.[197]

Such a ''safe harbor'' or ''established business'' exemption might have an anticompetitive effect on new businesses entering the market. In addition, the experience of law enforcement agencies indicates that much telemarketing fraud is perpetrated by so-called ''established businesses.'' Furthermore, the existence of policies such as a moneyback guarantee is no assurance that the company is not fraudulent. Law enforcement agencies are well aware that fraudulent

[186] *See, e.g.,* NYSCPB at 13; NACAA at 6; NAAG at 38–40; IA DOJ at 21.

[187] *See, e.g.,* DMA at 36; Olan at 27; ICTA at 57; AAAA at 6.

[188] Initially proposed Rule Section 310.6(b).

[189] *See, e.g.,* Viacom at 9.

[190] *See, e.g.,* IBM at 28; BPIA at 4.

[191] See DMA at 36–37.

[192] See NAAG at 41; ID AG at 2; USPS at 25.

[193] *See, e.g.,* IBM at 28; BPIA at 4.

[194] *See, e.g.,* CHC at 8, 12.

[195] *See, e.g.,* ARDA at 39; ACRA at 9–10; MSSC at 27; Time Warner at 44; ADC at 2; DMA at 38.

[196] *See, e.g.,* Time Warner at 23–26; DMA at 38; AmEx at 2; APAC at 1–2,6; Viacom at 6; Olan at 28; ACRA at 10; ARDA at 40; NRF at 17–18.

[197] *See, e.g.,* Tr. at 705–26.

telemarketers often tout their ''moneyback guarantees'' and refund policies as part of the sales solicitation. Unfortunately, such companies rarely honor those moneyback guarantees. Therefore, the Commission has decided not to include a broad ''safe harbor'' or ''established business'' exemption in the revised proposed Rule. The Commission believes that changes made elsewhere in the revised proposed Rule, including exemptions set forth in Section 310.6, obviate the need for such an exemption or safe harbor.

Section 310.7 Actions by States and Private Persons

The Telemarketing Act permits certain State officials and private persons to bring civil actions in an appropriate Federal district court for violations of this Rule.[198] Section 310.7 of the initially proposed Rule set forth the notice such parties must provide to the Commission concerning those actions. The language regarding the notice has not changed in the revised proposed Rule. However, the revised proposed Rule has added Section 310.7(b), which clarifies that the Rule does not vest State officials or private persons with jurisdiction over any person or activity outside the jurisdiction of the FTC Act.

The Commission added this language in response to questions from a number of commenters regarding the scope of the Rule and the authority to bring actions for violations of the Rule.[199] When coupled with the new language in section 310.1 on the scope of the Rule, the language in Section 310.7(b) clarifies that the Rule does *not* apply to any person outside the jurisdiction of the FTC Act, and that neither the Commission nor any other party authorized to bring suit for violations of the Rule may bring an action against such persons.

This restriction on the scope of the Rule and authority to bring actions under the Rule tracks Section 6(b) of the Telemarketing Act: ''[N]o activity which is outside the jurisdiction of [the FTC] Act shall be affected by this Act.'' [200] The language also is consistent with the legislative history of the Telemarketing Act and reflects the intent of Congress:

> [T]he legislation * * * does not vest the FTC, the State attorneys general, or private parties with jurisdiction over any person over whom the FTC does not otherwise have authority.[201]

Section 310.8 Federal Preemption

Section 310.8 of the initially proposed Rule stated that nothing in the Rule shall be construed to preempt any State law that is not in direct conflict with any provision of the Rule. Several commenters asked that this Section clarify that the Rule establishes a threshold requirement that State laws can exceed as long as they do not conflict with the Rule's requirements.[202] At least one commenter expressed concern that they would be subject to making State-required disclosures that are similar to the Rule's requirements but not directly in conflict.[203]

The Commission does not believe any changes are necessary to this Section. The language in this Section is clear and provides sufficient guidance that additional State requirements and prohibitions would be permitted as long as they do not conflict directly with the Rule. Thus, State registration, certification, or licensing requirements for telemarketing most likely would not be preempted because they would not be in direct conflict with any provisions of this Rule.

Effective Date

The NPR asked for comments on whether 30 days would provide sufficient time to come into compliance with the initially proposed Rule provisions.[204] Most of the parties who commented on the effective date indicated that 30 days would be insufficient given the need ''to make system changes, establish training programs [for] employees involved in telephone sales * * *, develop new recordkeeping procedures, prepare written disclosure and acknowledgement forms, draft and negotiate new contracts with service bureaus, [and] develop internal monitoring programs.'' [205] Most of the commenters who believed 30 days was insufficient suggested a 6-month time frame in order to achieve compliance.[206] NCL noted that some of the prohibited deceptive and fraudulent practices could be instituted immediately (for example, the prohibitions against misrepresentations), but that industry might need additional time to comply with certain other requirements of the initially proposed Rule.[207]

Because the revised proposed Rule eliminates many of the disclosure requirements that generated the foregoing compliance time predictions, the Commission proposes to set the effective date at 30 days from the date the final Rule is published. Thirty days should not unduly burden legitimate industry because, based on information provided by industry, legitimate sellers and telemarketers already comply with the revised proposed Rule. For example, legitimate industry represented that it already makes the affirmative disclosures required under Section 310.3(a)(1); it does not misrepresent material information pertaining to the sale of goods or services prohibited under Section 310.3(a)(2); it does not knowingly provide substantial assistance or support to deceptive sellers or telemarketers prohibited under Section 310.3(b); and it does not engage in credit card laundering prohibited under Section 310.3(c). Further, telemarketers have been required to comply with the TCPA since 1992 and should already have in place and be implementing the ''do not call'' procedures required under that Act. Such procedures therefore would comply with Section 310.4(b)(2) of this Rule, as well. Finally, the Commission understands from the workshop that participants already maintain the records required under Section 310.5. Because the Commission does not require that records be kept in any special form, legitimate industry is most likely already in compliance with Section 310.5 of the Rule. Based on the foregoing, the Commission does not believe that a further delayed effective date for the Rule is reasonable.

Section C. Invitation To Comment

Before adopting this revised proposed Rule as final, consideration will be given to any written comments submitted to the Secretary of the Commission on or before June 30, 1995. Comments submitted will be available for public inspection in accordance with the Freedom of Information Act, 5 U.S.C. 552, and Commission regulations, on normal business days between the hours of 8:30 a.m. and 5 p.m. at the Public Reference Section, Room 130, Federal Trade Commission, 6th Street and Pennsylvania Avenue, NW., Washington, DC 20580.

[198] See 15 U.S.C. 6103 and 6104.

[199] *See, e.g.,* AARP at 3; ABA at 1; BOB at 2.

[200] 15 U.S.C. 6105(b).

[201] Senate Report at 14.

[202] *See, e.g.,* AARP at 25; NYSCPB at 13–14; NAAG at 41–42; NACAA at 6.

[203] *See* Prudential at 4.

[204] 60 FR at 8328.

[205] NRF at 41. *See also* APAC at 9; NCL at 55; Olan at 29; NAA at 24; DMA at 40; SCIC at 71; ARDA at 41; Time Warner at 41. *But see* USPS at 26.

[206] *See, e.g.,* DMA at 40; Olan at 29; NRF at 41; SCIC at 7; Time Warner at 41.

[207] NCL at 55.

Section D. Communications by Outside Parties to Commissioners or Their Advisors

Pursuant to Commission Rule 1.26(b)(5), communications with respect to the merits of this proceeding from any outside party to any Commissioner or Commissioner advisor during the course of this rulemaking shall be subject to the following treatment. Written communications, including written communications from members of Congress, shall be forwarded promptly to the Secretary for placement on the public record. Oral communications, not including oral communications from members of Congress, are permitted only when such oral communications are transcribed verbatim or summarized at the discretion of the Commissioner or Commissioner advisor to whom such oral communications are made and are promptly placed on the public record, together with any written communications and summaries of any oral communications relating to such oral communications. Oral communications from members of Congress shall be transcribed or summarized at the discretion of the Commissioner or Commissioner advisor to whom such oral communications are made and promptly placed on the public record, together with any written communications and summaries of any oral communications relating to such oral communications.

Section E. Regulatory Flexibility Act

During the comment period, only a few commenters [208] asserted that the initially proposed Rule might have a significant economic impact on a substantial number of small entities. However, based on the revised proposed Rule's modified regulatory approach, the provisions of the Regulatory Flexibility Act relating to an initial and final regulatory analysis, 5 U.S.C. 603, 604, are not applicable to this document because it is believed that these revised regulations, if promulgated, will not have a significant economic impact on a substantial number of small entities, 5 U.S.C. 605.

The Telemarketing Act requires the Commission to issue regulations, not later than 365 days after the date of enactment, prohibiting deceptive telemarketing acts or practices and other abusive telemarketing acts or practices. The Act limits the scope of the regulations to entities that engage in telemarketing through one or more *interstate* telephone calls; telemarketing sales by local companies to local customers would most likely be intrastate calls and thus outside the parameters of the proposed rule. The Act also exempts certain catalog sales operations from the scope of the regulations. In addition, the revised proposed rule exempts pay-per-call services subject to the Commission's ''Trade Regulation Rule Pursuant to the Telephone Disclosure and Dispute Resolution Act of 1992,'' exempts telephone calls in which a payment is not required until after a face-to-face sales presentation has occurred, telephone calls initiated by a customer that are not in response to any solicitation, and customer telephone calls that are in response to mass media advertising.

As a result of these statutory and regulatory limitations, the Commission believes that many small entities will fall outside the scope of the regulations. In addition, any economic costs imposed on small entities remaining within the parameters of the rule are, in many instances, specifically imposed by statute. Where they are not, efforts have been made to make the revised proposed Rule's requirements flexible, in part to minimize any unforeseen burden on small entities, as described elsewhere in this notice.

To ensure that no substantial economic impact is being overlooked, public comment is requested on the effect of the proposed regulations on the costs to, profitability and competitiveness of, and employment in small entities. Subsequent to the receipt of public comments, it will be decided whether the preparation of a final regulatory flexibility analysis is warranted. Accordingly, based on available information, the Commission hereby certifies under the Regulatory Flexibility Act, 5 U.S.C. 605(b), that the proposed regulations will not have a significant economic impact on a substantial number of small entities. This notice serves as certification to that effect for the purposes of the Small Business Administration.

List of Subjects in 16 CFR Part 310

Telemarketing, Trade practices.

Accordingly, it is proposed that chapter I of 16 CFR be amended by adding a new part 310 to read as follows:

PART 310—TELEMARKETING SALES RULE

Sec.
310.1 Scope of regulations in this part.
310.2 Definitions.
310.3 Deceptive telemarketing acts or practices.
310.4 Abusive telemarketing acts or practices.
310.5 Recordkeeping requirements.
310.6 Exemptions.
310.7 Actions by states and private persons.
310.8 Federal preemption.
310.9 Severability.

Authority: 15 U.S.C. 6101–6108.

§ 310.1 Scope of regulations in this part.

This part implements the Telemarketing and Consumer Fraud and Abuse Prevention Act, 15 U.S.C. 6101–6108. This part does not apply to any activity outside the jurisdiction of the Federal Trade Commission Act, 15 U.S.C. 41, et seq.

§ 310.2 Definitions.

(a) *Acquirer* means a business organization, financial institution, or an agent of a business organization or financial institution that has authority from an organization that operates or licenses a credit card system to authorize merchants to accept, transmit, or process payment by credit card through the credit card system for money, goods or services, or anything else of value.

(b) *Attorney general* means the chief legal officer of a State.

(c) *Cardholder* means a person to whom a credit card is issued or who is authorized to use a credit card on behalf of or in addition to the person to whom the credit card is issued.

(d) *Commission* means the Federal Trade Commission.

(e) *Credit* means the right granted by a creditor to a debtor to defer payment of debt or to incur debt and defer its payment.

(f) *Credit card* means any card, plate, coupon book, or other credit device existing for the purpose of obtaining money, property, labor, or services on credit.

(g) *Credit card sales draft* means any record or evidence of a credit card transaction.

(h) *Credit card system* means any method or procedure used to process credit card transactions involving credit cards issued or licensed by the operator of that system.

(i) *Customer* means any person who is or may be required to pay for goods or services offered through telemarketing.

(j) *Investment opportunity* means anything, tangible or intangible, that is offered, offered for sale, sold, or traded based wholly or in part on representations, either expressed or implied, about past, present, or future income, profit, or appreciation. The term ''investment opportunity'' does not include sales of franchises subject to the Commission's Rule entitled ''Disclosure Requirements and Prohibitions

[208] *See generally* Olan; ATFA; ANA; ABA.

Concerning Franchising and Business Opportunity Ventures,'' 16 CFR part 436.

(k) *Material* means likely to affect a person's choice of, or conduct regarding, goods or services.

(l) *Merchant* means a person who is authorized under a written contract with an acquirer to honor or accept credit cards, or to transmit or process for payment credit card payments, for the purchase of goods or services.

(m) *Merchant agreement* means a written contract between a merchant and an acquirer to honor or accept credit cards, or to transmit or process for payment credit card payments, for the purchase of goods or services.

(n) *Outbound telephone call* means a telephone call initiated by a telemarketer to induce the purchase of goods or services.

(o) *Person* means any individual, group, unincorporated association, limited or general partnership, corporation, or other business entity.

(p) *Prize* means anything offered, or purportedly offered, and given, or purportedly given, to a person by chance. For purposes of this definition, chance exists if a person is guaranteed to receive an item and, at the time of the offer or purported offer, the telemarketer does not identify the specific item that the person will receive.

(q) *Prize promotion* means:

(1) A sweepstakes or other game of chance; or

(2) An oral or written express or implied representation that a person has won, has been selected to receive, or may be eligible to receive a prize or purported prize.

(r) *Seller* means any person who, in connection with a telemarketing transaction, provides or offers to provide goods or services to the customer in exchange for consideration.

(s) *State* means any State of the United States, the District of Columbia, Puerto Rico, the Northern Mariana Islands, and any territory or possession of the United States.

(t) *Telemarketer* means any person who, in connection with telemarketing, initiates or receives telephone calls to or from a customer.

(u) *Telemarketing* means a plan, program, or campaign which is conducted to induce the purchase of goods or services by use of one or more telephones and which involves more than one interstate telephone call. The term does not include the solicitation of sales through the mailing of a catalog which: contains a written description or illustration of the goods or services offered for sale; includes the business address of the seller; includes multiple pages of written material or illustrations; and has been issued not less frequently than once a year, when the person making the solicitation does not solicit customers by telephone but only receives calls initiated by customers in response to the catalog and during those calls takes orders only without further solicitation. For purposes of the previous sentence, the term ''further solicitation'' does not include providing the customer with information about, or attempting to sell, any other item included in the same catalog which prompted the customer's call or in a substantially similar catalog.

§ 310.3 Deceptive telemarketing acts or practices.

(a) *Prohibited deceptive telemarketing acts or practices.* It is a deceptive telemarketing act or practice and a violation of this part for any seller or telemarketer to engage in the following conduct:

(1) Before a customer pays for goods or services offered, failing to disclose, in a clear and conspicuous manner, the following material information:

(i) The total costs to purchase, receive, or use, and the quantity of, any goods or services that are the subject of the sales offer;

(ii) All material restrictions, limitations, or conditions to purchase, receive, or use the goods or services that are the subject of the sales offer;

(iii) All material terms and conditions of the seller's refund, cancellation, exchange, or repurchase policies if a representation about any such policy is made a part of the sales offer; and

(iv) That no purchase is necessary to win if a prize promotion is offered in conjunction with a sales offer of goods or services;

(2) Misrepresenting, directly or by implication, any of the following material information:

(i) The total costs to purchase, receive, or use, and the quantity of, any goods or services that are the subject of a sales offer;

(ii) Any material restriction, limitation, or condition to purchase, receive, or use goods or services that are the subject of a sales offer;

(iii) Any material aspect of the performance, efficacy, nature, or central characteristics of goods or services that are the subject of a sales offer;

(iv) Any material aspect of the nature or terms of the seller's refund, cancellation, exchange, or repurchase policies;

(v) Any material aspect of a prize promotion including, but not limited to, the odds of winning, the nature or value of a prize, or that payment is required to receive a prize;

(vi) Any material aspect of an investment opportunity including, but not limited to, risk, liquidity, earnings potential, or profitability; or

(vii) A seller's or telemarketer's affiliation with, or endorsement by, any government or third-party organization; and

(3) Making a false or misleading statement to induce any person to pay for goods or services.

(b) *Assisting and facilitating.* It is a deceptive telemarketing act or practice and a violation of this part for a person to provide substantial assistance or support to any seller or telemarketer when that person knows or consciously avoids knowing that the seller or telemarketer is engaged in any act or practice that violates § 310.3 (a) or (c), or § 310.4 of this part, and such substantial assistance is related to the commission or furtherance of that act or practice.

(c) *Credit card laundering.* Except as expressly permitted by the applicable credit card system, it is a deceptive telemarketing act or practice, and a violation of this part, for:

(1) A merchant to present to or deposit into, or cause another to present to or deposit into, the credit card system for payment, a credit card sales draft generated by a telemarketing transaction that is not the result of a telemarketing credit card transaction between the cardholder and the merchant;

(2) Any person to employ, solicit, or otherwise cause a merchant or an employee, representative, or agent of the merchant, to present to or deposit into the credit card system for payment, a credit card sales draft generated by a telemarketing transaction that is not the result of a telemarketing credit card transaction between the cardholder and the merchant; or

(3) Any person to obtain access to the credit card system through the use of a business relationship or an affiliation with a merchant, when such access is not authorized by the merchant agreement or the applicable credit card system.

§ 310.4 Abusive telemarketing acts or practices.

(a) *Abusive conduct generally.* It is an abusive telemarketing act or practice and a violation of this part for any seller or telemarketer to engage in the following conduct:

(1) Threats, intimidation, or the use of profane or obscene language;

(2) Requesting or receiving payment of any fee or consideration for goods or services represented to remove derogatory information from, or

improve, a person's credit history, credit record, or credit rating until:

(i) The time frame in which the seller has represented all of the goods or services will be provided to that person has expired; and

(ii) The seller has provided the person with documentation in the form of a consumer report from a consumer reporting agency demonstrating that the promised results have been achieved, such report having been issued more than six months after the results were achieved. Nothing in this part should be construed to affect the requirement in the Fair Credit Reporting Act, 15 U.S.C. 1681, that a consumer report may only be obtained for a specified permissible purpose;

(3) Requesting or receiving payment of any fee or consideration from a person, for goods or services represented to recover or otherwise assist in the return of money or any other item of value paid for by, or promised to, that person in a previous telemarketing transaction, until seven (7) business days after such money or other item is delivered to that person. This provision shall not apply to goods or services provided to a person by a licensed attorney; or

(4) Requesting or receiving payment of any fee or consideration in advance of obtaining a loan or other extension of credit when the seller or telemarketer has guaranteed or represented a high likelihood of success in obtaining or arranging a loan or other extension of credit for a person.

(b) *Pattern of calls.* (1) It is an abusive telemarketing act or practice and a violation of this part for a telemarketer to engage in, or for a seller to cause a telemarketer to engage in, the following conduct:

(i) Causing any telephone to ring, or engaging any person in telephone conversation, repeatedly or continuously with intent to annoy, abuse, or harass any person at the called number; or

(ii) Initiating an outbound telephone call to a person when that person previously has stated that he or she does not wish to receive an outbound telephone call made by or on behalf of the seller whose goods or services are being offered.

(2) A seller or telemarketer will not be liable for violating § 310.4(b)(1)(ii) if:

(i) It has established and implemented written procedures to comply with § 310.4(b)(1)(ii);

(ii) It has trained its personnel in the procedures established pursuant to § 310.4(b)(2)(i);

(iii) The seller, or the telemarketer acting on behalf of the seller, has maintained and recorded lists of persons who may not be contacted, in compliance with § 310.4(b)(1)(ii); and

(iv) Any subsequent call is the result of error.

(c) *Calling time restrictions.* Without the prior consent of a person, it is an abusive telemarketing act or practice and a violation of this part for a telemarketer to engage in outbound telephone calls to a person's residence at any time other than between 8:00 a.m. and 9:00 p.m. local time at the called person's location.

(d) *Required oral disclosures.* It is an abusive telemarketing act or practice and a violation of this part for a telemarketer in an outbound telephone call to fail to disclose promptly and in a clear and conspicuous manner to the person receiving the call, the following information:

(1) The identity of the seller;

(2) That the purpose of the call is to sell goods or services;

(3) The nature of the goods or services; and

(4) That no purchase is necessary to win if a prize promotion is offered in conjunction with a sales offer of goods or services. This disclosure must be made before the prize is described to the person called. If requested by that person, the telemarketer must disclose the no-purchase entry method for the prize promotion.

§ 310.5 Recordkeeping requirements.

(a) Any seller or telemarketer shall keep, in any form, for a period of 24 months from the date the record is produced, the following records relating to its telemarketing activities:

(1) All substantially different advertising, brochures, telemarketing scripts, and promotional materials;

(2) The name and last known address of each prize recipient and the prize awarded for prizes that have a value of $25.00 or more;

(3) The name and last known address of each customer, the goods or services purchased, the date such goods or services were shipped or provided, and the amount paid by the customer for the goods or services; and

(4) The name, any fictitious name used, the last known home address and telephone number, and the job title(s) for all current and former employees directly involved in telephone sales.

(b) Failure to keep all records required by § 310.5(a) shall be a violation of this part.

(c) The seller and the telemarketer calling on behalf of the seller may, by written agreement, allocate responsibility between themselves for the recordkeeping required by this section. When a seller and telemarketer have entered into such an agreement, the terms of that agreement shall govern, and the seller or telemarketer, as the case may be, need not keep records that duplicate those of the other. If the agreement is unclear as to who must maintain any required record(s), the seller shall be responsible for keeping such records.

(d) Absent a written agreement described in section 310.5(c) between the seller and the telemarketer, the seller shall be responsible for complying with § 310.5(a) (1), (2) and (3); the telemarketer shall be responsible for complying with § 310.5(a)(4). The seller and telemarketer may keep any required records in the manner, format, or place as they keep such records in the ordinary course of business.

(e) In the event of any dissolution or termination of the seller's or telemarketer's business, the principal of that seller or telemarketer shall maintain all records as required under this section. In the event of any sale, assignment, succession, or other change in ownership of the seller's or telemarketer's business, the successor business shall maintain all records required under this section.

§ 310.6 Exemptions.

The following telemarketing acts or practices are exempt under this part:

(a) Pay-per-call services subject to the Commission's ''Trade Regulation Rule Pursuant to the Telephone Disclosure and Dispute Resolution Act of 1992,'' 16 CFR part 308.

(b) Telephone calls in which the sale of goods or services is not completed, and payment or authorization of payment is not required, until after a face-to-face sales presentation by the seller during which the customer has the opportunity to examine the goods or services offered.

(c) Telephone calls initiated by a customer that are not the result of any solicitation by a seller or telemarketer.

(d) Telephone calls initiated by a customer in response to an advertisement through any media, other than direct mail solicitations; provided, however, that this exemption does not apply to calls initiated by a customer in response to an advertisement relating to investment opportunities, goods or services described in § 310.4(a)(2) or (3), or advertisements that guarantee or represent a high likelihood of success in obtaining or arranging for extensions of credit, if payment of a fee is required in advance of obtaining the extension of credit.

(e) Telephone calls initiated by a customer in response to a direct mail

solicitation that clearly and conspicuously discloses all material information listed in § 310.3(a)(1) of this part for any item offered in the direct mail solicitation; provided, however, that this exemption does not apply to calls initiated by a customer in response to a direct mail solicitation relating to investment opportunities, goods or services described in § 310.4(a)(2) or (3), or direct mail solicitations that guarantee or represent a high likelihood of success in obtaining or arranging for extensions of credit, if payment of a fee is required in advance of obtaining the extension of credit.

(f) Telephone calls between a telemarketer and any business, except calls involving the retail sale of nondurable office or cleaning supplies.

§ 310.7 Actions by States and private persons.

(a) Any attorney general or other officer of a State authorized by the State to bring an action under the Telemarketing and Consumer Fraud and Abuse Prevention Act, and any private person who brings an action under that Act, shall serve written notice of its action on the Commission, if feasible, prior to its initiating an action under this part. The notice shall be sent to the Office of the Director, Bureau of Consumer Protection, Federal Trade Commission, Washington, D.C. 20580, and shall include a copy of the State's or private person's complaint and any other pleadings to be filed with the court. If prior notice is not feasible, the State or private person shall serve the Commission with the required notice immediately upon instituting its action.

(b) This part does not vest the attorney general of any State or any private person with jurisdiction over any person or activity outside the jurisdiction of the Federal Trade Commission Act.

§ 310.8 Federal preemption.

Nothing in this part shall be construed to preempt any State law that is not in direct conflict with any provision of this part.

§ 310.9 Severability.

The provisions of this part are separate and severable from one another. If any provision is stayed or determined to be invalid, it is the Commission's intention that the remaining provisions shall continue in effect.

By direction of the Commission.

Donald S. Clark,

Secretary.

[FR Doc. 95–13814 Filed 6–7–95; 8:45 am]

BILLING CODE 6750–01–P

federal register

Thursday
June 8, 1995

Part IV

Department of the Interior

Bureau of Indian Affairs

Proposed Finding Against Federal Acknowledgment of the Golden Hill Paugussett Tribe; Notice

DEPARTMENT OF THE INTERIOR

Bureau of Indian Affairs

Proposed Finding Against Federal Acknowledgment of the Golden Hill Paugussett Tribe

May 24, 1995.

AGENCY: Bureau of Indian Affairs, Interior.

ACTION: Notice of proposed finding.

SUMMARY: Pursuant to 25 CFR 83.10(e), of the revised Federal acknowledgment regulations, which became effective March 28, 1994, notice is hereby given that the Assistant Secretary—Indian Affairs (Assistant Secretary) proposes to decline to acknowledge that the Golden Hill Paugussett Tribe, P.O. Box 1645, Bridgeport, Connecticut 06601–1645 exists as an Indian tribe within the meaning of Federal law. This notice is based on a determination that the Golden Hill Paugussett Tribe does not meet one of the seven mandatory criteria set forth in 25 CFR 83.7, specifically, criterion 83.7(e). Therefore, the Golden Hill Paugussett Tribe does not meet the requirements necessary for a government-to-government relationship with the United States.

DATES: As provided by 25 CFR 83.10(e)(1) and 83.10(h) through 83.10(l), any individual or organization wishing to challenge the proposed finding may submit factual or legal arguments and evidence to rebut or support the evidence relied upon. This material must be submitted on or before December 5, 1995.

ADDRESSES: Comments on the proposed finding and/or requests for a copy of the report of evidence should be addressed to the Office of the Assistant Secretary, 1849 C Street, N.W., Washington, DC 20240, Attention: Branch of Acknowledgment and Research. Mail Stop 2611–MIB.

FOR FURTHER INFORMATION CONTACT: Holly Reckord, Chief, Branch of Acknowledgment and Research, (202) 208–3592.

SUPPLEMENTARY INFORMATION: This notice is published in the exercise of authority delegated by the Secretary of the Interior to the Assistant Secretary by 209 DM 8.

In order to meet criterion 83.7(e), the petitioner must demonstrate Indian ancestry through descent from a historical tribe, or from tribes which combined and functioned as a single entity. When documenting descent from members of the historical tribe or tribes, the petitioner must show that: (1) The persons claimed as Indian ancestors were of Indian descent from a particular tribe; and (2) Indian descent must be derived from more than one Indian person.

The Federal acknowledgment process is not intended to recognize single individuals or single extended families of Indian descent, even if of Indian ancestry. Nor is it intended to recognize the descendants of single individuals or families, no matter how large a body of such descendants exit. Criterion e is one of the criteria which is intended to insure continuous existence as a tribal body. Descent from a single Indian ancestor does not meet this requirement.

The petitioner does not meet criterion e for the following reasons: (1) The petitioner's single common ancestor, William Sherman, has not been documented conclusively to have Indian ancestry from the historic Golden Hill Paugussett Tribe or from any other historic Indian tribe; and (2) even if William Sherman were shown to have Indian ancestry, from the historic Golden Hill Paugussett or from any other historic Indian tribe, the present group would be descended from a single Indian individual. It, therefore, would not meet the requirements of criterion e, which requires ancestry as a tribe, not simply Indian ancestry.

The Golden Hill Paugussett Tribe's petition for Federal acknowledgment claims that, ''The Golden Hill Paugussett tribe has existed in the State of Connecticut since time immemorial, and has maintained its autonomy and unity as an American Indian tribe while interacting with non-Indian populations since the Colonial period.''

The Golden Hill Paugussett Tribe's petition for Federal acknowledgment also maintains that as long as a single Golden Hill Paugussett descendant remains alive, the tribal entity continues to exist. This does not accord with the definition of tribal existence in 25 CFR part 83, and the underlying precedents in Federal law and judicial decisions.

A substantial body of documentation was available on the petitioning group and its ancestors. This extensive evidence does not demonstrate either the Paugussett Indian tribal ancestry claimed in the petition or other Indian tribal ancestry. Furthermore, had Indian ancestry been documented, Indian descent would remain from only one individual. One individual Indian ancestor does not qualify the group for Federal recognition as an Indian Tribe. Based on this factual determination, we conclude that the Golden Hill Paugussett tribe should not be granted Federal acknowledgment under 25 CFR part 83.

As provided by 25 CFR 83.10(h) of the revised regulations, a report summarizing the evidence, reasoning, and analyses that are the basis for the proposed decision will be provided to the petitioner and interested parties, and is available to other parties upon written request. Comments on the proposed finding and/or requests for a copy of the report of evidence should be addressed to the Office of the Assistant Secretary, Bureau of Indian Affairs, 1849 C Street, NW., Washington, DC 20240, Attention; Branch of Acknowledgment and Research, Mail Stop 2611–MIB. Third parties must simultaneously supply copies of their comments to the petitioner in order for them to be considered by the Department of the Interior.

During the response period, the Assistant Secretary shall provide technical advice concerning the proposed finding and shall make available to the petitioner in a timely fashion any records used for the proposed finding not already held by the petitioner, to the extent allowable by Federal law (83.10(j)(1)). In addition, the Assistant Secretary shall, if requested by the petitioner or any interested party, hold a formal meeting for the purpose of inquiring into the reasoning, analyses, and factual bases for the proposed finding. The proceedings of this meeting shall be on the record. The meeting record shall be available to any participating party and become part of the record considered by the Assistant Secretary in reaching a final determination (83.10(j)(2)).

If third party submissions are received during the regular response period, the petitioner shall have a minimum of 60 days to respond to these submissions. This period may be extended at the Assistant Secretary's discretion if warranted by the nature and extent of the comments (83.10(k)).

At the end of the response periods for comment on this proposed finding, the Assistant Secretary shall consider the written arguments and evidence submitted during the response periods and issue a final determination. The Assistant Secretary shall consult with the petitioner and interested parties to determine an equitable timeframe for preparation of the final determination and notify the petitioner and interested parties of the date such consideration begins (83.10(l)). The Assistant Secretary may conduct any necessary additional research and may request additional information from the petitioner and commenting parties (83.10(l)(1)). A summary of the final determination will be published in the **Federal Register** within 60 days from the date on which the consideration of the written arguments and evidence

rebutting or supporting the proposed finding begins, as provided in 25 CFR 83.10 (l)(2).

Ada E. Deer,

Assistant Secretary—Indian Affairs.

[FR Doc. 95–13998 Filed 6–7–95; 8:45 am]

BILLING CODE 4310–02–P

federal register

Thursday
June 8, 1995

Part V

Department of Health and Human Services

Public Health Service

National Toxicology Program (NTP) Proposed Revised Criteria for Listing Substances in the Biennial Report on Carcinogens (BRC) and Notice of Meeting of the NTP Board of Scientific Counselors

DEPARTMENT OF HEALTH AND HUMAN SERVICES

Public Health Service

National Toxicology Program (NTP) Proposed Revised Criteria for Listing Substances in the Biennial Report on Carcinogens (BRC) and Notice of Meeting of the NTP Board of Scientific Counselors

Background

A public meeting of the NTP Board of Scientific Counselors' ad hoc Working Group to Review the Criteria for Listing Substances in the Biennial Report on Carcinogens (BRC) was held on April 24 and 25, 1995, at the Washington Hilton and Towers Hotel, 1919 Connecticut Avenue NW., Washington DC. The purpose of the meeting was to receive public comments on the current criteria for listing substances in the BRC, and to review and make recommendations on these criteria. The issues addressed by this ad hoc group were: (1) The adequacy of existing criteria for listing substances in future Reports; and (2) the incorporation of mechanistic data as part of the criteria for listing substances in future Reports which may include the consideration of sensitive sub-populations as well as procedures to upgrade or downgrade the evaluation of the results of animal bioassay or epidemiology studies. A background and discussion document prepared by the NTP for use by the ad hoc working group and also for review and comment by the public, is available upon request. Copies of this document can be obtained by contacting the NTP Liaison Office at NIEHS, P.O. Box 12233, Research Triangle Park, NC 27709, or by FAX to (919) 541–0295.

This meeting was the first step in the review of the criteria and was open to the public. The meeting began with a plenary session which provided background on the BRC and a public comment session. The working group then broke into three breakout groups, with each breakout group addressing the same above listed issues. The final session of the meeting was a plenary session at which time each breakout group reported on their deliberations. The chairperson, rapporteur, and facilitator of the three breakout groups completed draft reports of their group's discussions and recommendations and submitted it to the Chairperson of the ad hoc working group. The Chairperson, working with NIEHS/NTP staff, completed a draft summary report of the criteria review meeting which subsequently was sent to all ad hoc working group members for editing and corrections. A copy of the revised summary report is printed below. Also printed below are the current and proposed revised criteria developed by the NIEHS/NTP based on the input of the NTP Board of Scientific Counselors' ad hoc working group.

Action-Request for Public Input on the Proposed Revised Criteria

The NTP seeks comments and views on the proposed revised criteria which follows. Public input concerning the proposed revised criteria for listing a substance in the BRC is important to the review process and is encouraged. A further opportunity for comment will be provided during a meeting of the NTP Board of Scientific Counselors in the NIEHS Conference Center, Building 101, South Campus, National Institute of Environmental Health Sciences, 111 Alexander Drive, Research Triangle Park, North Carolina, on June 29 , 1995. The primary agenda topic for this meeting concerns the summary report and recommendations of the ad hoc working group of the NTP Board from their review of the criteria for listing substances in the BRC on April 24 and 25, 1995. This meeting is open to the public, and public input concerning the criteria for listing a substance in the Biennial Report on Carcinogens is encouraged. Formal oral comments during the NTP Board meeting will be limited to five minutes to permit maximum participation. Written comments accompanying oral statements are encouraged. To assure consideration by the Board at this meeting, written comments must be submitted to Dr. Larry G. Hart, Executive Secretary for the NTP Board of Scientific Counselors and received by June 23, 1995. Registration to attend is not required; however, to ensure adequate seating, we ask that those planning to attend let us know. To register, submit written comments or announce intention to make oral comments on the criteria review report, receive information on the agenda, or be put on the mailing list for summary minutes subsequent to the meeting, please contact: Dr. L. G. Hart, P.O. Box 12233, Research Triangle Park, NC 27709; telephone: (919) 541–3971; FAX: (919) 541–0719.

Dated: May 30, 1995.

Kenneth Olden,

Director, National Toxicology Program.

Attachments

Summary Report of the Meeting of the National Toxicology Program's Board of Scientific Counselors' Ad Hoc Working Group To Review the Criteria for Listing Substances in the Biennial Report on Carcinogens, Washington Hilton and Towers Hotel, Washington, D.C., April 24 and 25, 1995

Background

The Biennial Report on Carcinogens is prepared in response to Section 301(b)(4) of the Public Health Service Act which stipulates that the Secretary of the Department of Health and Human Services shall publish a report which contains a list of all substances (i) which either are known to be human carcinogens or may reasonably be anticipated to be human carcinogens; and (ii) to which a significant number of persons residing in the United States are exposed. This responsibility has been delegated by the Secretary to the Director, National Toxicology Program (NTP). Dr. Ken Olden, Director of the National Institute of Environmental Health Sciences (NIEHS) and the National Toxicology Program, has initiated a review of the BRC to broaden input to its preparation, broaden the scope of scientific review associated with the Report, and provide review of the criteria used for inclusion of substances in the BRC.

An ad hoc working group of the NTP Board of Scientific Counselors was established to receive public comments on the existing criteria and review and make recommendations on the criteria for listing substances in the BRC. This ad hoc working group had a balance of expertise and views and included representatives from Academia; Industry; Labor; Federal, State and Local Agencies; and Private Organizations. The working group reviewed the criteria in an open, public meeting in Washington, D.C. on April 24 & 25, 1995.

Meeting Summary

The ad hoc working group was chaired by NTP Board of Scientific Counselors member Dr. Arnold Brown of the University of Wisconsin. The working group was divided into three breakout groups to allow for a more in depth discussion of the criteria and the public comments received. Each of the breakout groups were asked to address the following issues in their review of the criteria:

(a) The adequacy of existing criteria for listing substances in future Reports; and

(b) The incorporation of mechanistic data as part of the criteria for listing substances in future Reports that may include the consideration of sensitive sub-populations as well as procedures to upgrade or downgrade the evaluation of the results of animal bioassay or epidemiology studies.

Plenary Session I was chaired by Dr. George Lucier, Director, Environmental Toxicology Program, NIEHS/NTP and allowed for opening and background presentations by Dr. Kenneth Olden, Director, NIEHS and NTP, Dr. C. W. Jameson, NIEHS/NTP, and Dr. Marilyn Wind, CPSC (NTP Executive Committee BRC Working Group representative). Dr. Lucier then gave the charge to the ad hoc working group to

address the two issues outlined above in their review of the criteria and identify areas of consensus, areas of debate, and the knowledge gaps that create the debate. Dr. Lucier then turned the meeting over to Dr. Brown.

Plenary Session II was devoted to the presentation of public comments concerning the BRC criteria. Written comments had been received from the following individuals/organizations and distributed to the ad hoc Working Group prior to the meeting:

North American Insulation Manufacturers Association
Chlorobenzene Producers Association
Dr. Stephen DeVito, US EPA
Dr. E. E. McConnell

Public comments were made during Plenary Session II by the following individuals:

Dr. Charles Axten—NAIMA
Dr. Nathan Karch—Karch & Associates
Dr. Matthew Bogdanffy—Haskell Laboratory
Dr. James Sherman—Chlorobenzene Producers Association
Dr. Myra Karstadt—Center for Science in the Public Interest
Dr. Frank Mirer—United Auto Workers
Dr. E. E. McConnell—Private Consultant

Comments made during the public comment period ranged from recommending retention of the current criteria with no change, to revising the existing criteria to require the incorporation of available mechanistic data. (A copy of the written public statements provided by the above listed individuals is available upon written request to the NTP Liaison Office, NIEHS, P.O. Box 12233, MD A3–01, Research Triangle Park, NC 27709–2233). Following the public comment session, Dr. Brown directed that each breakout group was to meet individually and, based on the charge given to the ad hoc Working Group by Dr. Lucier, address the BRC criteria.

Upon completion of the discussions of the three breakout groups, the full ad hoc Working Group reconvened in the final Plenary III session. Each breakout group made a report on their deliberations and recommendations.

Each breakout group had addressed the two issues outlined in the charge given by Dr. Lucier. Breakout group 1 stated in their report that the existing criteria were found not to be adequate and suggested revision of the criteria to include use of available mechanistic data that is relevant for improving hazard identification. The report from breakout group 2 stated there was unanimity from their members that the criteria should be updated and that mechanistic data should be utilized in the listing process. Group 2 recommended significant revisions to the existing criteria including the incorporation of additional listing categories. Breakout group 3 report stated that their members were of the general consensus that the current criteria are adequate for the stated purpose of the BRC, however minor revisions and clairifications to the existing criteria were considered to be appropriate. In summary, it was the recommendation of breakout groups 1 & 3 that the existing two categories of the current criteria for listing substances in the BRC should remain with revisions to category 2 to allow for all scientific evidence to be considered. This will allow for the best scientific judgment to be used in consideration of substances for listing in the BRC. Breakout group 2 recommended a more significant expansion of the current criteria which included the incorporation of additional listing categories of ''presumptive evidence of carcinogenic activity'' and ''laboratory animal carcinogen presumed not to be a human carcinogen''.

Based on the reports from the three breakout groups and the ensuing discussions during the final plenary session of the entire ad hoc Working Group, the NIEHS/NTP determined that, while there was not complete agreement concerning the adequacy of the current criteria for listing substances in the BRC, it was the general consensus of the entire ad hoc Working Group that the existing criteria should be revised and clarified. The recommended revisions are to permit consideration of more mechanistic information in listing substances in the BRC. As indicated in the three breakout group reports, the area of debate was how extensive the modifications should be. The discussions during Plenary Session III indicated that the majority of the ad hoc Working Group members felt the revised criteria should maintain the current 2 categories with revisions to assure that all scientific evidence is considered to allow for the best scientific judgment. It was also apparent from these discussions that there was consensus that the BRC is a hazard identification document and not to be used as a quantitative risk assessment for the listed substances. It is based on these considerations and recommendations that the NIEHS/NTP has proposed revised criteria for listing substances in the BRC. These proposed revisions are consistent with the discussion and recommendations of the majority of the ad hoc Working Group and the current legislation regarding the Biennial Report on Carcinogens. These proposed revised criteria will be available to the public for review and comment and presented to the NTP Board of Scientific Counselors at their June 29, 1995, meeting. The Board will review the report and recommendations; receive public comment on the report; and develop Board recommendations concerning the selection criteria. Further review will include the PHS Environmental Health Policy Committee and the NTP Executive Committee.

The ad hoc Working Group made several additional general recommendations concerning the Biennial Report on Carcinogens. These included recommending that a formal mechanism be established for the re-evaluation of substances previously listed in the BRC to determine if listing is still warranted. As a result of this recommendation, the NTP will evaluate the current procedures for de-listing a substance and, if necessary, revise it. It was also recommended by the Working Group that the NTP should stimulate discussion (e.g., workshops, discussion papers) on the use of mechanistic data in hazard identification. The recent NTP workshop on ''Mechanism-Based Toxicology in Cancer Risk Assessment: Implications for Research, Regulation and Legislation'' held January 11–13, 1995, and the upcoming Workshop on Validation and Regulatory Acceptance of Alternative Test Methods'' planned for October 30–November 1, 1995 are examples of how this recommendation will be acted upon. The NTP plans to continue these types of activities in the future.

Current BRC Criteria

For the purpose of the BRC, the degrees of evidence are as follows:

1. *Known To Be Carcinogens*

There is sufficient evidence of carcinogenicity from studies in humans that indicates a causal relationship between the agent and human cancer.

2. *Reasonably Anticipated To Be Carcinogens*

a. There is limited evidence of carcinogenicity from studies in humans, which indicates that causal interpretation is credible, but that alternative explanations, such as chance, bias or confounding, could not adequately be excluded, or

b. There is sufficient evidence of carcinogenicity from studies in experimental animals that indicates that there is an increased incidence of malignant tumors: (a) in multiple species or strains, or (b) in multiple experiments (preferably with different routes of administration or using different dose levels), or (c) to an unusual degree with regard to incidence, site or type of tumor, or age at onset. Additional evidence may be provided by data concerning dose-response effects, as well as information on mutagenicity or chemical structure.

Proposed Revised BRC Criteria

For the purpose of the BRC, the degrees of evidence are as follows:

1. *Known To Be Human Carcinogens*

There is sufficient evidence of carcinogenicity from studies in humans that indicates a causal relationship between the substance and human cancer.

2. *Reasonably Anticipated To Be Human Carcinogens*

a. There is limited evidence of carcinogenicity from studies in humans which indicate that causal interpretation is credible but that alternative explanations such as chance, bias or confounding could not adequately be excluded, or

b. There is sufficient evidence of carcinogenicity from studies in experimental animals that indicates there is an increased incidence of malignant and/or combined benign and malignant tumors: (1) in multiple species or at multiple tissue sites, or (2) by multiple routes of exposure, or (3) to an unusual degree with regard to incidence, site or type of tumor or age at onset.

Conclusions regarding carcinogenicity in humans or experimental animals should be based on scientific judgment. Consideration may be given to relevant information on dose response, route of exposure, chemical structure, sensitive sub populations, genetic effects or other data relating to mechanism of action, and/or factors that may be unique to a given substance. There may be substances for which there is less than sufficient

evidence of carcinogenicity in humans or laboratory animals but for which there are compelling data indicating that the substance could reasonably be anticipated to cause cancer in humans. Conversely, there may be substances for which there is sufficient evidence of carcinogenicity in laboratory animals but there are compelling data indicating that the agent acts through mechanisms which do not operate in humans and would therefore reasonably be anticipated not to cause cancer in humans.

National Toxicology Program Board of Scientific Counselors' Ad Hoc Working Group for the Review of the Criteria for Listing Substances in the Biennial Report on Carcinogens

List of Ad Hoc Working Group Members

Dr. Arnold Brown(Chairman)—University of Wisconsin Medical School
Dr. Bill Allaben—FDA/NCTR
Dr. Carl Barrett—NIEHS
Dr. Eula Bingham—Univ. of Cincinnati
Dr. John Dement—Duke University Medical Center
Dr. Norman Drinkwater—McArdle Laboratory , Univ. of Wisconsin
Dr. Kathleen Dixon—Univ. of Cincinnati, Dept. of Environ. Health
Dr. Gerard Egan—Exxon Biomedical Sciences Inc.
Dr. Clay Frederick—Rohm & Haas
Dr. Thomas Goldsworthy—Chemical Industry Institute of Toxicology
Dr. Bryan Hardin—NIOSH
Dr. David Longfellow—NCI
Dr. Judith MacGregor—Toxicology Consulting Services
Dr. Roger McClellan—Chemical Industry Institute of Toxicology
Dr. Karen Medville—Cornell University
Dr. James Melius—Center to Protect Workers' Rights
Dr. Beth Mileson—NC State Department of Health
Dr. Franklin Mirer—International Union, UAW
Dr. Rafael Moure—University of Massachusetts / Lowell
Dr. Gunter Oberdorster—Univ. of Rochester, Dept. Env. Medicine
Dr. Jean Parker—EPA/ORD
Dr. Janet Phoenix—Environmental Health Center, Washington, DC
Dr. Resha Putzrath—Georgetown Risk Group, Washington, DC
Dr. David Rall—Asst. Surgeon General, USPHS (Ret.)
Dr. Larry Roslinski—Ford Motor Company
Mr. Sheldon Samuels—Workplace Health Fund
Dr. Regina Santella—Columbia University, Dept. Environ. Sciences
Dr. Loretta Schuman—OSHA
Dr. Ellen Silbergeld—Environmental Defense Fund and the U of MD
Dr. Thomas Sinks—Nat'l Center for Env. Health, CDC
Dr. Thomas Slaga—Univ. of Texas, M.D. Anderson Cancer Center
Ms. Yee Wan—Stevens ATSDR
Dr. Donald Stevenson—Former Director of Toxicology, Shell Oil Co.
Dr. Lorenzo Tomatis—Former Director, IARC
Dr. Harri Vainio—Institute of Occupational Health, Finland
Dr. Vanessa Vu—EPA/OPPTS
Dr. Bailus Walker—Howard University
Dr. Cheryl Walker—Univ. of Texas, M.D. Anderson Cancer Center
Dr. Jerry Ward—National Cancer Institute
Dr. Marilyn Wind—CPSC
Dr. Sidney Wolfe—Public Citizens Group, Washington, DC
Dr. Hiroshi Yamasaki—IARC
Dr. Lauren Zeise—State of California EPA

[FR Doc. 95–13874 Filed 6–7–95; 8:45 am]

BILLING CODE 4140–01–P

federal register

Thursday
June 8, 1995

Part VI

Office of Management and Budget

5 CFR Part 1320

Controlling Paperwork Burdens on the Public; Regulatory Changes Reflecting Recodification of the Paperwork Reduction Act; Proposed Rule

OFFICE OF MANAGEMENT AND BUDGET

5 CFR Part 1320

Controlling Paperwork Burdens on the Public; Regulatory Changes Reflecting Recodification of the Paperwork Reduction Act

AGENCY: Office of Management and Budget, Executive Office of the President.

ACTION: Notice of proposed rulemaking.

SUMMARY: The recently enacted Paperwork Reduction Act of 1995 replaces the Paperwork Reduction Act of 1980, as amended by the Paperwork Reduction Reauthorization Act of 1986. The new Act redefines ''collection of information'' explicitly to include third-party and public disclosures, requires agencies to seek public comment concerning proposed collections of information through 60-day notice to the public before submission for clearance by the Office of Management and Budget (OMB) and thereafter to certify to OMB, e.g., that the proposed collection reduces to the extent practicable and appropriate the burden on respondents for small business, local government, and other small entities, and indicates for each recordkeeping requirement the length of time persons are required to maintain the records specified. The new Act also makes more explicit the responsibilities of agencies in developing proposed collections of information and submitting them for OMB review and approval, and changes a number of definitions and other provisions. OMB is proposing to amend its existing paperwork clearance rules to reflect these and the other legislative changes made by the Paperwork Reduction Act of 1995.

DATES: Comments must be received on or before August 7, 1995.

ADDRESSES: Please address all written comments to Jefferson B. Hill, Office of Information and Regulatory Affairs, OMB, Washington, D.C. 20503. Comments may be submitted via facsimile to 202/395–7285. Electronic mail comments may be submitted via SMTP to Hill__J@a1.eop.gov or via X.400 to G=Jefferson, S=Hill, PRMD=gov+eop, ADMD+telemail, C=us. Comments submitted via electronic mail should include the commenter's name, affiliation, postal address, and e-mail address in the text of the message.

FOR FURTHER INFORMATION CONTACT: Jefferson B. Hill, Office of Information and Regulatory Affairs, OMB, Washington, D.C. 20503 (202/395–7340). Inquiries may be submitted via facsimile to 202/395–7285. Electronic mail comments may be submitted via SMTP to Hill__J@a1.eop.gov or via X.400 to G=Jefferson, S=Hill, PRMD=gov+eop, ADMD+telemail, C=us. Inquiries submitted via electronic mail should include the commenter's name, affiliation, postal address, and e-mail address in the text of the message.

SUPPLEMENTARY INFORMATION:

A. Background

On May 10, 1988, the Office of Management and Budget (OMB) issued 5 CFR Part 1320—Controlling Paperwork Burden on the Public [53 FR 16618]. The 1988 rule implemented the provisions of the Paperwork Reduction Act of 1980 (Pub. L. 96–511, 44 U.S.C. Chapter 35), as amended by the Paperwork Reduction Reauthorization Act of 1986 (Pub. L. 99–500 (October 18, 1986) and 99–591 (October 30, 1986), section 101(m)), concerning agency responsibilities for obtaining OMB approval of their collection of information, and other paperwork control functions.

The Paperwork Reduction Act of 1995 (Pub. L. 104–13 (May 22, 1995)) replaces the Paperwork Reduction Act of 1980, as amended in 1986. The Paperwork Reduction Act of 1995 takes effect on October 1, 1995. The procedural requirements of the Paperwork Reduction Act of 1980, as amended in 1986, will continue to apply to collections of information approved by OMB on or before September 30, 1995, and which have a valid OMB control number expiring after that date.

OMB is proposing to amend 5 CFR Part 1320 in order to reflect the legislative recodification of the Paperwork Reduction Act. In proposing these amendments, OMB is fully cognizant of the legislative intent of the draftsmen: ''To the extent the revision is a restatement of the Paperwork Reduction Act of 1980, as amended in 1986, the legislation is a reaffirmation of the law's scope, underlying purposes, requirements, and legislative history. It is the intent of the [Senate] Committee that the Act's prior legislative history remain unchanged and continue to be viewed an important explanation of the Congressional intent underpinning the Act's provisions'' (S. Rpt. 104–8, p. 35; see H. Rpt. 104–37, p. 35; H. Rpt. 104–99, pp. 27–28).

These proposed amendments change the order and structure of the existing rules in order to clarify agency and OMB responsibilities, and to elaborate upon the various requirements of the Paperwork Reduction Act of 1995. The scope of these proposed changes, their legislative basis, and their relation to the existing rule are described below. The rationale supporting the existing rules is set forth at 53 FR 16618 (May 10, 1988), 52 FR 27768 (July 23, 1987), 48 FR 13666 (March 31, 1983), and 47 FR 39515 (September 8, 1982). References to ''44 U.S.C. [section number]'' are references to the Paperwork Reduction Act of 1995, Pub. L. 104–13, unless explicitly stated otherwise.

B. Proposed Section 1320.1—Purpose

Proposed § 1320.1 is equivalent to existing § 1320.1. Added to the proposed § 1320.1 is a statement that the new rule is designed to maximize the practical utility and public benefit of the collection of information, an addition reflecting the legislative changes in 44 U.S.C. 3501(2) and 44 U.S.C. 3504(c)(4). Deleted from the proposed § 1320.1 is a reference to inter-agency reporting, a deletion reflecting the proposed deletion of existing § 1320.17.

C. Proposed Section 1320.2—Effect

Proposed § 1320.2 serves the same function as existing § 1320.2. The proposed § states the effective date of the new rule, and is derived from section 4 of Pub. L. 104–13.

D. Proposed Section 1320.3—Definitions

Proposed § 1320.3 is equivalent to existing § 1320.7. While proposed § 1320.3 serves the same function, OMB is proposing a number of changes.

Proposed § 1320.3(a) defining ''agency'' is substantively identical to existing § 1320.7(a).

Proposed § 1320.3(b): This paragraph defining ''burden'' is equivalent to existing § 1320.7(b), except that it is amended to reflect the legislative changes in 44 U.S.C. 3502(2). The detail added by 44 U.S.C. 3502(2) clarifies the scope of this definition by codifying OMB practice and understanding. As the floor manager for the Paperwork Reduction Act of 1995, Senator Sam Nunn, stated at final Senate passage, this bill ''modifies the Act's definition of burden to capture the full range of regulatory paperwork compliance costs'' (141 Cong. Rec. S5399 (April 6, 1995)).

Proposed § 1320.3(c): This paragraph defining ''collection of information'' serves the same function as existing § 1320.7(c), but has been amended in one respect. Paragraph (c)(4) is equivalent to and a combination of existing § 1320.7(s) (''Ten or more persons'') and the last two sentences in existing § 1320.7(n) (''Person''), but is moved to become a part of proposed § 1320.3(c) in order to make it clear that the limitations in paragraph (c)(4) apply

only to the use of ''person'' in the context of ''ten or more persons.'' In addition, the definition retains the ''third-party'' disclosure language found in existing § 1320.7(c)(2). OMB's interpretation of ''collection of information'' to include third-party disclosures had been rejected by the Supreme Court in *Dole* v. *United Steelworkers of America,* 494 U.S. 26 (1990), but was reaffirmed by Congress in the 1995 Act (see 44 U.S.C. 3502(3)). In this regard, one non-substantive change has been made. The reference to ''disclosure requirements'' in existing § 1320.7(c)(1) has been replaced by ''posting, notification, labeling, or similar disclosure requirements'' in proposed new § 1320.3(c)(1), in order to parallel the formulation in proposed new § 1320.3(c)(2) (''through posting, notification, labeling or similar disclosure requirements''), which is taken from existing § 1320.7(c)(2).

Proposed § 1320.3(d): This paragraph defining ''conduct or sponsor'' is equivalent to existing § 1320.7(r) (''Sponsor''), which defined both the conducting, and the sponsoring, of a collection of information. The definition is amended to reflect the legislative changes in 44 U.S.C. 3502(3)(A).

Proposed § 1320.3(e) defining ''Director'' is equivalent to existing § 1320.7(d).

Proposed § 1320.3(f): This paragraph defining ''display'' is equivalent to existing § 1320.7(e), but is amended in several ways to clarify that ''display'' can be interpreted in common-sense ways appropriate for electronic media, the **Federal Register**, and the Code of Federal Regulations. As the Conference Report explains, ''[f]or collections of information contained in a rule, agencies must provide the required information in a manner reasonably calculated to inform the public. Notice may be provided in the preamble to a final rule containing the collection of information, or in a general notice in the volume of the Code of Federal Regulations in which the agency's regulations appear.'' H. Rep. 104–99, p. 37. These examples are illustrative; the information may also be set forth, as in existing § 1320.5(e)(2), in the regulatory text of the final rule (including through a technical amendment), or, as in proposed new § 1320.3(f)(2), in a separate notice in the **Federal Register** announcing OMB approval.

Proposed § 1320.3(g) defining ''independent regulatory agency'' is equivalent to existing § 1320.7(h).

Proposed § 1320.3(h): This paragraph defining ''information'' and the subparagraphs defining exemptions thereto are, with two changes, identical to existing § 1320.7(j). The exemption for ''certifications'' in existing § 1320.7(j)(1) is clarified in order to ensure that the exempted certification is used only to identify an individual in a routine, non-intrusive, non-burdensome way. The exemption will not be available for a certification that substitutes for a collection of information to collect evidence of, or to monitor, compliance with regulatory standards.

Proposed § 1320.3(i) defining ''OMB'' is added for clarity.

Proposed § 1320.3(j) defining ''penalty'' is equivalent to existing § 1320.7(m). The word ''penalty'' is used in proposed § 1320.6, and is based on 44 U.S.C. 3502(14).

Proposed § 1320.3(k): This paragraph defining ''person'' is equivalent to existing § 1320.7(n), except that the last two sentences in existing § 1320.7(n) have been moved to proposed § 1320.3(c)(4) (''collection of information''). The purpose for placing the limitations on the definition of ''person'' into proposed § 1320.3(c)(4) is to make it clear that the limitations in paragraph (c)(4) apply only to the use of the word ''person'' in the context of ''ten or more persons.''

Proposed § 1320.3(l): This paragraph defining ''practical utility'' is equivalent to existing § 1320.7(o), but is amended in the final sentence to incorporate the definition of ''general purpose statistics'' in existing § 1320.7(i).

Proposed § 1320.3(m): This paragraph defining ''recordkeeping requirement'' is equivalent to existing § 1320.7(p), but is amended to reflect the legislative changes in 44 U.S.C. 3502(13). As with the definition of ''collection of information'' in existing § 1320.5(p), although less explicitly, the definition of ''recordkeeping requirement'' in existing § 1320.7(p) included requirements that persons maintain information for third parties. The precise scope of existing § 1320.5(p) was placed into some question by the Supreme Court's decision in *Dole* v. *United Steelworkers of America,* 494 U.S. 26 (1990). However, in *Action Alliance of Senior Citizens of Greater Philadelphia* v. *Sullivan,* 930 F.2d 77 (D.C. Cir.), cert. denied, 502 U.S. 938 (1991), the Court of Appeals for the District of Columbia Circuit rejected a broad reading of *Dole,* in the context of a requirement to maintain (rather than disclose) information for third parties. In the 1995 Act, Congress clarified the scope of ''recordkeeping requirement'' in 44 U.S.C. 3502(13).

E. Proposed Section 1320.4—Coverage

Proposed § 1320.4 is equivalent to existing § 1320.3, but is amended to reflect the legislative rewording in 44 U.S.C. 3502(3)(B) and 3518(c)(i)(D). No substantive change is intended in this section.

Paragraph (b) is based on 44 U.S.C. 3518(c)(2). Agencies from time to time investigate general operations of their programs, to assess factors including performance against statutory or regulatory objectives, the effectiveness of financial systems, or the efficiency of automated data systems. These programmatic reviews often involve surveys or other means of posing identical questions to ten or more persons without a focus on ''specific individuals or entities.'' Under 44 U.S.C. § 3518(c)(2) and proposed paragraph 1320.4(b), the collection of information during such general programmatic investigations (other than information collected in an antitrust investigation, as specified) are covered by the Act when ''undertaken with reference to a category of individuals or entities such as a class of licensees or an entire industry.'' However, as is made clear in 44 U.S.C. § 3518(c)(1)(B)(ii) and proposed paragraph 1320.4(a)(2), investigations are exempt from the Act when they involve ''an agency against specific individuals or entities.''

Thus, for example, the Act does *not* apply to a law enforcement investigation to determine whether persons are in compliance with the law. *See, e.g., Phillips Petroleum Co.* v. *Lujan,* 963 F.2d 1380, 1382–83, 1386–87 (10th Cir. 1992) (Paperwork Act does not apply to ''an audit of the propriety of the royalty and other payment made by'' two mineral lessees; the audit ''clearly falls within the parameters of th[e] exemption'' for ''an administrative action or investigation involving an agency against specific individuals or entities''); *United States* v. *Saunders,* 951 F.2d 1065, 1066–67 (9th Cir. 1991) (Paperwork Act does not apply to an IRS summons; ''An IRS investigation of a taxpayer's failure to file her or his income tax return constitutes 'an agency action against specific individuals.' ''); *Lonsdale* v. *United States,* 919 F.2d 1440, 1444–45 (10th Cir. 1990) (same as Saunders; ''the Paperwork Reduction Act is inapplicable to 'information collection request' forms issued during an investigation against an individual to determine his or her tax liability''). However, the Act *does* apply to a general programmatic investigation to determine whether the agency's program achieves its statutory objectives.

Finally, when conducted by certain agency offices, including Chief Financial Officers or Inspectors General, an investigation often carries the title of ''audit.'' OMB recognizes that the Inspectors General have an important statutory function that requires independence in the conduct of their investigations. OMB seeks public comment on how best to implement the objectives of the Paperwork Reduction Act of 1995 while maintaining the practical ability of the Inspectors General to perform their statutory functions.

F. Proposed Section 1320.5—General Requirements

In general, proposed § 1320.5 reflects a number of legislative changes to 44 U.S.C. 3506(c) and 3507(a), and in light of those legislative changes amends and consolidates provisions in existing § 1320.4, § 1320.6, § 1320.11, § 1320.15, and § 1320.21. The purpose of this section is to provide a road-map of agency clearance obligations under this Part.

Proposed § 1320.5(a): This paragraph, in subparagraph (1)(i)–(iii) and subparagraphs (2)–(3), provides an outline of agency and OMB obligations for clearing proposed collections of information under this Part, and reflects the legislative changes in 44 U.S.C. 3507(a).

Paragraph 1320.5(a)(1)(iii) identifies the information that an agency is to submit to OMB as part of its submission of a proposed collection of information for clearance.

In response to President Clinton's statement at the signing of the Paperwork Reduction Act of 1995, to direct agencies to permit electronic submission of responses, the agency, under proposed § 1320.5(a)(1)(iii)(E), is to include in its submission to OMB a statement about whether (and is so, to what extent) the proposed collection of information involves the use of automated collection techniques or other forms of information technology (including permitting electronic submission of responses); the agency is also to explain to OMB its basis for this decision. This builds on activities undertaken earlier in the process. Proposed § 1320.8(a)(5) requires the agency to evaluate this issue in its consideration of the collection of information, and proposed § 1320.8(d)(1)(iv) requires the agency to seek public comments on this issue.

In addition, the information to be submitted under paragraph 1320.5(a)(1)(iii)(C) includes an explanation of the decision that it would not be appropriate, under proposed § 1320.8(b)(1), for a proposed collection of information to display an expiration date. Under proposed § 1320.5(a)(1)(iii)(D), an agency is to explain a decision to provide for any payment or gift to respondents, other than remuneration of contractors or grantees. This information also includes, under proposed § 1320.5(a)(1)(iii)(F), a summary of the public comments received under proposed § 1320.8(d), including actions taken by the agency in response to the comments, and the date and page of publication in the **Federal Register** of the notice therefor.

This paragraph, in subparagraph (1)(iv), provides the information that agencies are to set forth in the **Federal Register** notice announcing that the agency has submitted a proposed information collection for OMB clearance. Subparagraph (1)(iv) is equivalent to existing § 1320.15, but is amended to reflect the legislative changes in 44 U.S.C. 3507(a)(1)(D). Subparagraph (1)(iv) also directs agencies, except as provided in proposed § 1320.13(d), to request public comments within 30 days of publication because, under 44 U.S.C. 3507(b), OMB is directed to provide at least 30 days for public comment prior to making its decision concerning the agency's clearance request.

Proposed § 1320.5(b): This paragraph stresses the agency's obligation, under 44 U.S.C. 3512, to display a currently valid OMB control number and to inform the persons who are to respond to the collection of information that such persons are not required to respond to the collection of information unless it displays a currently valid OMB control number. This paragraph, in subparagraph (ii)(A)–(B), elaborates on possible ways in which the agency can so inform the respondents. This paragraph serves the same function in the first sentence in existing § 1320.4(a). As noted above, with respect to the definition of ''display'' in proposed new § 1320.3(f), the Conference Report explains that ''[f]or collections of information contained in a rule, agencies must provide the required information in a manner reasonably calculated to inform the public. Notice may be provided in the preamble to a final rule containing the collection of information, or in a general notice in the volume of the Code of Federal Regulations in which the agency's regulations appear.'' H. Rep. 104–99, p. 37. These examples are illustrative; the information may also be set forth, as in existing § 1320.5(e)(2), in the regulatory text of the final rule (including through a technical amendment), or, as in proposed new § 1320.3(f)(2) and proposed new § 1320.5(b)(2)(ii)(B), in a separate notice in the **Federal Register** announcing OMB approval.

Proposed § 1320.5(c): This paragraph is equivalent to existing § 1320.11(e), and identifies the sections in this Part under which an agency should submit different kinds of proposed collections of information, specifically, for collections of information contained in proposed rules published for public comment in the **Federal Register** and for current regulations that were published as final rules in the **Federal Register**. Subparagraph (5) of this paragraph defines when a submission to OMB is deemed to have been received, and applies with respect to the time frames for OMB review. This subparagraph is equivalent to existing § 1320.11(j), except that it has been revised to clarify that it applies only to the receipt of a ''properly submitted'' package. If OMB concludes that a package has not been ''properly submitted,'' OMB will notify the agency of this conclusion and indicate what corrective steps need to be taken.

Proposed § 1320.5(d)(1): Subparagraph (1) of this paragraph is equivalent to existing § 1320.4(b)(1), (b)(2), and the first two sentences of (b)(3). The third sentence of existing § 1320.4(b)(3) is no longer necessary. The guidelines set forth in existing § 1320.6 have been moved to proposed new § 1320.5(d)(2), which immediately follows, and the requirement to discuss the ''practical steps'' for consultation have been superseded by the 1995 Act's requirements for a comment period prior to submission to OMB.

Proposed § 1320.5(d)(2). Subparagraph (2) of this paragraph is equivalent to existing § 1320.6. Existing § 1320.6(e) is now reflected in proposed § 1320.5(a)(1)(iii)(D); existing § 1320.6 (h) and (j) are now reflected in proposed § 1320.9(c) and (f); and existing § 1320.6(k) is now reflected in proposed § 1320.5(a)(1)(iii)(D), § 1320.8(a)(5), and § 1320.8(d)(1)(iv). These guidelines are also amended by adding three new provisions. Subparagraph (2)(vi) directs agencies to avoid using statistical data classifications that have not been reviewed and approved by OMB. Subparagraph (2)(vii) directs agencies to avoid collecting information at the request of another country or an international organization unless such request has been reviewed, coordinated, and approved by OMB. Subparagraph (2)(viii) directs agencies not to make confidentiality pledges to respondents unless they have adequate authority to honor such pledges. An agency need not comply with each of the policy

directives listed under subparagraph (2) of this paragraph if the agency is able to demonstrate, in its submission for OMB clearance, that such characteristic of the collection of information is necessary to satisfy statutory requirements or other substantial need.

Proposed § 1320.5(e) is substantively identical to existing § 1320.4(c).

Proposed § 1320.5(f) is substantively identical to a combination of existing § 1320.4(d) and § 1320.11(i).

Proposed § 1320.5(g) is equivalent to existing § 1320.11(h), but is amended to reflect the legislative changes in 44 U.S.C. 3507(h)(3).

Proposed § 1320.5(h) is added to request agencies to consult with OMB before continuing to use OMB-approved forms or other collections of information after the expiration date printed thereon (e.g., using copies of old forms to conduct a collection of information that OMB has reapproved for continued use). Continuing to use such forms may confuse the public which, under proposed § 1320.5(b) and proposed § 1320.6, is being advised that absent a valid OMB control number the collection of information is unenforceable.

G. Proposed Section 1320.6—Public Protection

Proposed § 1320.6 is equivalent to existing § 1320.5, but is amended to reflect the legislative changes in 44 U.S.C. 3512.

Proposed § 1320.6(a)(1) states that no person is to be subject to any penalty for failing to comply with a collection of information that is subject to the requirements of this Part if the collection of information does not display a currently valid OMB control number.

Proposed § 1320.6(a)(2) states that no person is to be subject to any penalty for failing to comply with a collection of information that is subject to the requirements of this Part if the agency fails to inform the person who is to respond to the collection of information that such person is not required to respond to the collection of information unless it displays a currently valid OMB control number.

Proposed § 1320.6(b) states that the protections provided by 44 U.S.C. 3512(a) and proposed § 1320.6(a) may be raised in the form of a complete, defense, bar, or otherwise to the imposition of such penalties at any time during the agency administrative process in which such penalty may be imposed or judicial action applicable thereto.

Proposed § 1320.6(c) is equivalent to existing § 1320.5(b).

Proposed § 1320.6(d) is identical to existing § 1320.5(c).

Proposed § 1320.6(e) is new. This paragraph points out that, under existing law, the public protections provided by proposed § 1320.6(a) do not preclude the imposition of a penalty on a person for failing to comply with a collection of information that is imposed on the person by statute, e.g., 26 U.S.C. 6011(a) (statutory requirement for person to file a tax return), 42 U.S.C. 6938(c) (statutory requirement for person to provide notification before exporting hazardous waste).

This paragraph is based on the principle announced by the courts in several cases which addressed the issue of whether the public protection provided by 44 U.S.C. 3512 could preclude the Federal government from prosecuting persons for their failure to perform paperwork duties imposed upon them by statute. See *Salberg* v. *United States,* 969 F.2d 379 (7th Cir. 1992); *United States* v. *Neff,* 954 F.2d 698 (11th Cir. 1992); *United States* v. *Dawes,* 951 F.2d 1189 (10th Cir. 1991); *United States* v. *Hicks,* 947 F.2d 1356 (9th Cir. 1991); *United States* v. *Wunder,* 919 F.2d 34 (6th Cir. 1990). In those cases, the courts concluded that Congress, in enacting the Paperwork Reduction Act, did not intend to require itself to comply with the requirements of that Act (and seek and obtain OMB approval) whenever Congress decides to impose a paperwork requirement on persons directly by statute.[1]

There is no legislative history pertinent to the Paperwork Reduction Act of 1995 that suggests that Congress intended to change this court interpretation for 44 U.S.C. 3512.

Accordingly, where Congress imposes a collection of information directly on persons, by statute (as, e.g., in 26 U.S.C. § 6011(a) and 42 U.S.C. § 6938(c)), then the public protection provided by proposed § 1320.6(a) would not preclude the imposition of penalties for a person's failure to comply with the statutory mandate. This principle, however, does not extend to situations in which a statute authorizes, or directs, an agency to impose a collection of information on persons, and the agency does so. In such cases, the agency is obligated to comply with the Paperwork Reduction Act of 1995 in imposing the paperwork requirement (just as the agency must comply with other applicable statutes—e.g., the Administrative Procedure Act in the case of regulations), and the public protection provided by proposed § 1320.6(a) would apply to such paperwork requirements.

H. Proposed Section 1320.7—Agency Head and Senior Official Responsibilities

Proposed § 1320.7 is equivalent to existing § 1320.8, but is amended to reflect the legislative changes in 44 U.S.C. 3506(a). Proposed § 1320.7(c) calls upon the Senior Official to head an office responsible for ensuring agency compliance with the implementation of the information policies and information resources management responsibilities established under the Paperwork Reduction Act of 1995, and reflects the legislative changes in 44 U.S.C. 3506(a)(3). Proposed § 1320.7(d) calls upon the Senior Official to establish a process within that office that is sufficiently independent of program responsibility to evaluate fairly whether proposed collections of information should be approved under this Part, and reflects the legislative changes in 44 U.S.C. 3506(c)(1).

I. Proposed Section 1320.8—Agency Collection of Information Responsibilities

In general, proposed § 1320.8 is new, and reflects the legislative changes in 44 U.S.C. 3506(c) (1) and (2). Basically, this proposed section sets forth the information collection development responsibilities for each agency.

Proposed § 1320.8(a) reflects the legislative changes in 44 U.S.C. 3506(c)(1)(A). In general, agencies need, in developing new collections of information and in deciding whether to continue existing ones, to evaluate the need for each aspect of the information collection, estimate respondent burdens, and, if appropriate, test the collection of information through a pilot program. Also, in response to President Clinton's statement at the signing of the

[1] See Salberg, supra, at 384 (''Salberg was convicted of violating a statute. It was a federal statute—26 U.S.C. § 7203—not a regulation or an instruction book that required Salberg to file an income tax return. Statutes are not subject to the PRA * * * .''); Neff, supra, at 700 (''Congress did not enact the PRA's public protection provision to allow OMB to abrogate any duty imposed by Congress. * * * So the PRA provides Neff no refuge from his statutorily-imposed duty to file income tax returns''); Dawes, supra, at 1192 (''We would be inclined to follow the general analysis of Wunder and Hicks and hold that the operation of the PRA in these circumstances did not repeal the criminal sanctions for failing to file an income tax return because the obligation to file is a statutory one.''); Hicks, supra at 1359 (''where *Congress* sets forth an explicit statutory requirement that the citizen provide information, and provides statutory criminal penalties for failure to comply with the request, that is another matter. This is a legislative command, not an administrative request.''); Wunder, supra, at 38 (''the requirement to file a tax return is mandated by statute, not regulation. Defendant was not convicted of violating a regulation, but of violating a statute which required him to file an income tax return.'').

Paperwork Reduction Act of 1995, to direct agencies to permit electronic submission of responses, the agency is to evaluate whether (and if so, to what extent) the burden on respondents can be reduced through the use of automated collection techniques or other forms of information technology, e.g., permitting electronic submission of responses. Subsequent in the process, proposed § 1320.8(d)(1)(iv) requires the agency to seek public comments on this issue, and proposed § 1320.5(a)(1)(iii)(D) requires the agency to state, in its eventual submission to OMB, whether (and to what extent) the collection of information involves such techniques, and the agency must explain to OMB the basis for its decision.

Proposed § 1320.8 (b) and (c) reflect the legislative changes in 44 U.S.C. 3506(c)(1)(B). Agencies need to ensure that each collection of information is inventoried, displays a currently valid OMB control number, and, if appropriate, an expiration date; and is reviewed by OMB in accordance with the clearance requirements of 44 U.S.C. 3507. As part of the information clearance package (through the means suggested in proposed § 1320.8(c)), the agency needs to inform and provide fair notice to potential respondents of the policy reasons for which the information is planned to be and/or has been collected; the way in which such information is planned to be and/or has been used for the proper performance of the functions of the agency; the estimated burden; whether responses are voluntary, required to obtain a benefit, or mandatory; and the fact that an agency may not conduct or sponsor, and the respondent is not required to respond to, a collection of information unless it displays a valid OMB control number. Together with the estimate of burden, agencies are to request that the public direct to the agency any comments concerning the accuracy of this burden estimate and any suggestions for reducing this burden; this request for public comments concerning the burden estimate is equivalent to that included in existing § 1320.21(a)(2).

Proposed § 1320.8(d) reflects the legislative changes in 44 U.S.C. 3506(c)(2). Unless the proposed collection of information is contained in a Notice of Proposed Rulemaking and the agency seeks OMB clearance under proposed § 1320.11, or unless exempted under proposed § 1320.13, the agency needs, for each new proposed collection of information or extension of an existing one to provide 60-day notice in the **Federal Register**, and otherwise consult with the members of the public and affected agencies. In this notice, under paragraph (d)(1) of this section, the agency needs to solicit comment on the need for the information, its practical utility, the accuracy of the agency's burden estimate, and on ways to minimize burden on respondents, including through the use of automated collection techniques or other forms of information technology. Under paragraph (d)(2) of this section, if an agency chooses not to publish the proposed collection of information in the **Federal Register**, the agency should provide more than a 60-day notice to permit timely receipt of a copy by mail, or should explain how interested persons may obtain a copy (including, if applicable, how to obtain electronic access to the proposed collection of information).

J. Proposed Section 1320.9—Agency Certifications for Proposed Collections of Information

In general, proposed § 1320.9 is new, and reflects the legislative changes in 44 U.S.C. 3506(c)(3). Basically, this proposed section sets forth the content of agency certifications accompanying proposed collections of information submitted for OMB clearance.

As part of an agency's submission of a proposed collection of information to OMB for clearance, an agency needs to send, along with the other information called for by proposed § 1320.5(a)(1)(iii)(B)–(E), a certification that the information collection meets certain standards and provide a record supporting such certification. The agency needs to certify that the proposed collection of information, e.g., is needed; not unnecessarily duplicative; reduces to the extent practicable and appropriate the burden on respondents, including, for small business, local government, and other small entities, the use of the techniques outlined in the Regulatory Flexibility Act; is written in unambiguous terminology; is to be implemented in ways consistent with the existing reporting and recordkeeping practices of the respondents; indicates for each recordkeeping requirement the length of time documents are to be retained; informs potential respondents of the information called for under proposed § 1320.8(b)(3); has been developed by an office that has planned for the efficient and effective management of the information to be collected; uses effective and efficient statistical survey methodology; and to the maximum extent practicable, uses appropriate information technology to reduce burden and improve data quality.

K. Proposed Section 1320.10—Clearance of Collections of Information, Other Than Those Contained in Proposed Rules or in Current Rules

Proposed § 1320.10 is equivalent to existing § 1320.12, but is amended to reflect the legislative changes in 44 U.S.C. 3507.

Proposed § 1320.10(a): This paragraph is equivalent to existing § 1320.12(a). This paragraph provides that the agency notice in the **Federal Register** required by proposed § 1320.5(a)(1)(iv) request that public comments be submitted within at least 30 days of publication to OMB. OMB is obligated to provide at least 30 days for public comment prior to making a decision under this proposed section under 44 U.S.C. 3507(b), but would like to receive public comments at the end of that period in order to be prepared to make a decision if the need so dictates.

Proposed § 1320.10(b): This paragraph is equivalent to existing § 1320.12(b). Reflecting 44 U.S.C. 3507(c)(2), this paragraph provides that OMB is obligated to make its decision within 60 days after receipt of the proposed collection of information or publication of the notice under paragraph (a) of this section, whichever is later.

Proposed § 1320.10(c): This paragraph is equivalent to existing § 1320.12(c). The maximum time period for OMB review is 60, rather than 90, days, reflecting the legislative change in 44 U.S.C. 3507(c)(3).

Proposed § 1320.10(d): This paragraph is equivalent to existing § 1320.12(d), except that it is expanded to reflect the legislative changes in 44 U.S.C. 3512(a)(2). An agency may not conduct or sponsor a collection of information unless the collection of information displays a currently valid OMB control number and the agency informs potential respondents that such respondents are not required to respond to the collection of information unless it displays a currently valid OMB control number.

Proposed § 1320.10(e) is new, and reflects the legislative changes in 44 U.S.C. 3507(h)(1). This paragraph outlines the procedures an agency needs to follow before it seeks to extend an OMB approval for an ongoing collection of information. The agency needs to conduct the review established in proposed § 1320.8, including the seeking of comment from the public under § 1320.8(d), and submit, no later than 60 days before the expiration date, the collection of information for review and approval under this Part, which shall include an explanation of how the agency has used the information it has

collected. This paragraph does not apply to a collection of information contained in a published current rule which has been approved by OMB and has a currently valid OMB control number because such a collection needs to be submitted for OMB clearance under proposed § 1320.12.

Proposed § 1320.10(f) is equivalent to the first five sentences in existing § 1320.11(f) (see proposed § 1320.12(i)).

Proposed § 1320.10(g) is equivalent to the sixth sentence in existing § 1320.11(f).

L. Proposed Section 1320.11—Clearance of Collections of Information in Proposed Rules

Proposed § 1320.11 is equivalent to existing § 1320.13, but is amended to reflect the legislative changes in 44 U.S.C. 3507(d).

Proposed § 1320.11(a): This paragraph is equivalent to existing § 1320.13(a). This paragraph provides that the agency notice in the **Federal Register**, required by proposed § 1320.5(a)(1)(iv), request that public comments be submitted to OMB within 30 days of the notice's publication. Under the 1995 Amendments, OMB is obligated to provide at least 30 days for public comment prior to making a decision, 44 U.S.C. 3507(b); however, OMB must make its decision within 60 days under 44 U.S.C. 3507(d)(1)(B). Therefore, while OMB will of course attempt to consider all comments that OMB receives before OMB makes its decision, a public comment is best assured of having maximum impact if it is received within 30 days of the notice's publication.

Proposed §§ 1320.11 (b), (c), and (d) are equivalent to existing §§ 1320.13 (b), (c), and (d).

Proposed § 1320.11(e) is new, reflecting the legislative change in 44 U.S.C. 3507(b) that OMB is obligated to provide at least 30 days for public comment prior to making a decision.

Proposed §§ 1320.11 (f), (g), (h), (i), and (j) are equivalent to existing §§ 1320.13 (e), (f), (g), (h), and (i).

Proposed § 1320.11(k) is equivalent to the first sentence in existing § 1320.13(j). Proposed § 1320.11(l) serves the same function as the second and third sentences in existing § 1320.13(j), but is amended to reflect the legislative change in 44 U.S.C. 3512(a)(2).

M. Proposed Section 1320.12—Clearance of Collections of Information in Current Rules

Proposed § 1320.12 is equivalent to existing § 1320.14, but is amended to reflect the legislative changes in 44 U.S.C. 3507.

Proposed § 1320.12(a): This paragraph is equivalent to existing § 1320.14(a), but is amended to reflect the legislative change in 44 U.S.C. 3507(h)(1). This paragraph outlines the procedures an agency needs to follow before it seeks to extend an OMB approval for a collection of information published current rule which has been approved by OMB and has a currently valid OMB control number. The agency needs to conduct the review established in proposed § 1320.8, including the seeking of comment from the public under § 1320.8(d), and submit, no later than 60 days before the expiration date, the collection of information for review and approval under this Part, which shall include an explanation of how the agency has used the information it has collected.

Proposed § 1320.12(b) is new. It is equivalent to proposed § 1320.12(a), except that it applies a collection of information contained in a published current rule that was not required to be submitted for OMB review under the Paperwork Reduction Act at the time the collection of information was made part of the rule, but which collection of information is now subject to the Paperwork Reduction Act of 1995. Specifically, this paragraph may apply to published current rule that contains a ''disclosure to third parties or the public'' (see proposed § 1320.3(c)) or particular kinds of ''recordkeeping requirement'' (see proposed § 1320.3(m)(2)–(4)), that were exempt from OMB review under *Dole* v. *United Steelworkers of America*, 494 U.S. 26 (1990), or a certification or other affirmation that the agency uses as a substitute for a collection of information to collect evidence of, or to monitor, compliance with regulatory standards (see proposed § 1320.3(h)(1)). Added at the end of proposed § 1320.12(b) is an instruction equivalent to proposed § 1320.11(l).

Proposed § 1320.12(c): This paragraph is equivalent to existing § 1320.14(b). This paragraph provides that the agency notice in the **Federal Register** required by proposed § 1320.5(a)(1)(iv) request that public comments be submitted within at least 30-days of publication to OMB. OMB is obligated to provide at least 30 days for public comment prior to making a decision under this proposed section under 44 U.S.C. 3507(b), but would like to receive public comments at the end of that period in order to be prepared to make a decision if the need so dictates.

Proposed § 1320.12(d): This paragraph is equivalent to existing § 1320.14(c). Reflecting 44 U.S.C. 3507(c)(2), this paragraph provides that OMB is obligated to make its decision within 60 days after receipt of the proposed collection of information or publication of the notice under paragraph (a) of this section, whichever is later. This paragraph also contains a new last sentence, reflecting the legislative change in 44 U.S.C. 3507(b) that OMB is obligated to provide at least 30 days for public comment prior to making a decision.

Proposed § 1320.12(e): This paragraph is equivalent to existing § 1320.14(e). The maximum time period for OMB review is 60, rather than 90, days, reflecting the legislative change in 44 U.S.C. 3507(c)(3).

Proposed § 1320.12(f): Paragraph (f)(1)(i) and (ii) is amended to reflect the legislative changes in 44 U.S.C. 3507(h)(2). Paragraph (f)(1)(iii) is equivalent to existing § 1320.14(f). Paragraph (f)(2) is equivalent to § 1320.14(g).

Proposed § 1320.12(g) is equivalent to existing § 1320.14(h).

Proposed § 1320.12(h): Paragraph (h)(1) is equivalent to existing § 1320.14(i). Paragraph (h)(2) is equivalent to the second sentence in existing § 1320.5(a)(2).

Proposed § 1320.12(i): This paragraph is equivalent to the first three sentences of existing § 1320.11(f) (see proposed § 1320.10(f)).

N. Proposed Section 1320.13—Emergency Processing

Proposed § 1320.13 is equivalent to existing § 1320.18, but is amended to reflect the legislative changes in 44 U.S.C. 3507(b), (c), and (j). OMB is proposing to delete existing § 1320.18(g) concerning ''expedited'' processing. Given the legislative changes in 44 U.S.C. 3507(b) and (c), OMB is obligated, unless OMB receives a request for emergency processing under this section, to provide at least 30 days for public comment prior to making a decision and make its decision within 60 days after receipt of the clearance request or publication of the notice in the **Federal Register** required by proposed § 1320.5(a)(1)(iv), whichever is later.

O. Proposed Section 1320.14—Public Access

Proposed § 1320.14(a) is equivalent to existing § 1320.19. Proposed § 1320.14(b) is equivalent to existing § 1320.11(b).

Proposed § 1320.14.(c) is new, and reflects the legislative changes in 44 U.S.C. 3517(b). Any person may request OMB to review any collection of

information conducted by or for an agency to determine, if a person is obligated to maintain, provide, or disclose the information to or for an agency. Unless the request is frivolous, OMB is, in coordination with the responsible agency, to respond to the request within 60 days (unless notice is given of an extension to a specified date) and to take appropriate remedial action, as necessary.

P. Proposed Section 1320.15—Independent Regulatory Agency Override Authority

Proposed § 1320.15 is equivalent to existing § 1320.20, except that it is amended to reflect the legislative changes in 44 U.S.C. 3507(f) and 44 U.S.C. 3512(a).

Q. Proposed Section 1320.16—Delegation of Approval Authority

Proposed § 1320.16 is equivalent to existing § 1320.9, except that it is amended to reflect the legislative changes in 44 U.S.C. 3506(a)(3).

R. Proposed Section 1320.17—Information Collection Budget

Proposed § 1320.17 is equivalent to the first and last sentences in existing § 1320.10.

S. Proposed Section 1320.18—Other Authority

Proposed § 1320.18 is equivalent to existing § 1320.22.

T. Appendix A—Agencies with Delegated Review and Approval Authority

Proposed new Appendix A is substantively identical to existing Appendix A. Appendix A contains the delegations to the Federal Reserve Board and to the Federal Communications Commission. OMB is proposing to make only conforming changes, e.g., to revise the section cross-references in the delegations to the proposed sections in the regulation. No substantive changes are proposed.

Q. Other Amendments

Other proposed amendments to 5 CFR Part 1320 include the deletion of terms that are no longer used in this Part, e.g., ''Educational agency or institution'' and ''A Federal education program,'' and of sections that are no longer pertinent, e.g., existing § 1320.16, entitled ''Collections of information prescribed by another agency,'' and existing § 1320.17, entitled ''Interagency reporting.''

Assessment of Potential Costs and Benefits and Regulatory Flexibility Act Analysis

OMB has analyzed the effects of this rule under the Regulatory Flexibility Act (5 U.S.C. 601 et seq.). Copies of this analysis are available upon request. In summary, OMB has concluded that these amendments will have a salutary impact on small entities through the reduction of unnecessary paperwork.

For purposes of the Unfunded Mandates Reform Act of 1995 (P.L. 104–4), as well as Executive Order No. 12875, this rule does not include any Federal mandate that may result in increased expenditures by State, local, and tribal governments, or by the private sector.

Issued in Washington, D.C., May 31, 1995.

Sally Katzen,

Administrator, Office of Information and Regulatory Affairs.

List of Subjects in 5 CFR Part 1320

Reporting and recordkeeping requirements, Paperwork, Collections of information.

For the reasons set forth in the preamble, OMB proposes to revise 5 CFR Part 1320 as follows:

PART 1320: CONTROLLING PAPERWORK BURDENS ON THE PUBLIC

Sec.

1320.1 Purpose.
1320.2 Effect.
1320.3 Definitions.
1320.4 Coverage.
1320.5 General requirements.
1320.6 Public protection.
1320.7 Agency head and Senior Official responsibilities.
1320.8 Agency collection of information responsibilities.
1320.9 Agency certifications for proposed collections of information.
1320.10 Clearance of collections of information, other than those contained in proposed rules or in current rules.
1320.11 Clearance of collections of information in proposed rules.
1320.12 Clearance of collections of information in current rules.
1320.13 Emergency processing.
1320.14 Public access.
1320.15 Independent regulatory agency override authority.
1320.16 Delegation of approval authority.
1320.17 Information collection budget.
1320.18 Other authority.

Appendix A: Agencies With Delegated Review and Approval Authority

Authority: 31 U.S.C. Sec. 1111 and 44 U.S.C. Chs. 21, 25, 27, 29, 31, 35.

§ 1320.1 Purpose.

The purpose of this part is to implement the provisions of the Paperwork Reduction Act of 1995 (44 U.S.C. chapter 35) (the Act) concerning collections of information. It is issued under the authority of section 3516 of the Act, which provides that ''The Director shall promulgate rules, regulations, or procedures necessary to exercise the authority provided by this chapter.'' It is designed to minimize and control burdens and maximize the practical utility and public benefit of the collection of information by or for Federal agencies from individuals, small businesses, educational and nonprofit institutions, Federal contractors, State, local and tribal governments, and other persons.

§ 1320.2 Effect.

(a) Except as provided in paragraph (b) of this section, this part takes effect on October 1, 1995.

(b)(1) In the case of a collection of information for which there is in effect on September 30, 1995, a control number issued by the Office of Management and Budget under 44 U.S.C. Chapter 35, the provisions of this part shall take effect beginning on the earlier of:

(i) The date of the first extension of approval for or modification of that collection of information after September 30, 1995; or

(ii) The date of the expiration of the OMB control number after September 30, 1995.

(2) Prior to such extension of approval, modification, or expiration, the collection of information shall be subject to 5 CFR part 1320, as in effect on September 30, 1995.

§ 1320.3 Definitions.

For purposes of implementing the Act and this part, the following terms are defined as follows:

(a) *Agency* means any executive department, military department, Government corporation, Government controlled corporation, or other establishment in the executive branch of the government, or any independent regulatory agency, but does not include:

(1) The General Accounting Office;

(2) Federal Election Commission;

(3) The governments of the District of Columbia and the territories and possessions of the United States, and their various subdivisions; or

(4) Government-owned contractor-operated facilities, including laboratories engaged in national defense research and production activities.

(b)(1) *Burden* means the total time, effort, or financial resources expended by persons to generate, maintain, retain, or disclose or provide information to or for a Federal agency, including:

(i) Reviewing instructions;

(ii) Developing, acquiring, installing, and utilizing technology and systems for the purpose of collecting, validating, and verifying information;

(iii) Developing, acquiring, installing, and utilizing technology and systems for the purpose of processing and maintaining information;

(iv) Developing, acquiring, installing, and utilizing technology and systems for the purpose of disclosing and providing information;

(v) Adjusting the existing ways to comply with any previously applicable instructions and requirements;

(vi) Training personnel to respond to a collection of information;

(vii) Searching data sources;

(viii) Completing and reviewing the collection of information; and

(ix) Transmitting, or otherwise disclosing the information.

(2) The time, effort, and financial resources necessary to comply with a collection of information that would be incurred by persons in the normal course of their activities (e.g., in compiling and maintaining business records) will be excluded from the ''burden'' if the agency demonstrates that the reporting, recordkeeping, or disclosure activities needed to comply are usual and customary.

(3) A collection of information conducted or sponsored by a Federal agency that is also conducted or sponsored by a unit of State, local, or tribal government is presumed to impose a Federal burden except to the extent that the agency shows that such State, local, or tribal requirement would be imposed even in the absence of a Federal requirement.

(c) *Collection of information* means, except as provided in § 1320.4, the obtaining, causing to be obtained, soliciting, or requiring the disclosure to an agency, third parties or the public of information by or for an agency by means of identical questions posed to, or identical reporting, recordkeeping, or disclosure requirements imposed on, ten or more persons, whether such collection of information is mandatory, voluntary, or required to obtain a benefit. ''Collection of information'' includes any requirement or request for persons to obtain, maintain, retain, report, or publicly disclose information. As used in this part, ''collection of information'' refers to the act of collecting or disclosing information, to the information to be collected or disclosed, to a plan and/or an instrument calling for the collection or disclosure of information, or any of these, as appropriate.

(1) ''Collection of information'' includes the use of report forms, application forms, schedules, questionnaires, surveys, reporting or recordkeeping requirements, or other similar methods. Similar methods may include contracts; agreements; policy statements; plans; rules or regulations; collections of information contained in, derived from, or authorized by such rules or regulations; planning requirements; circulars; directives; instructions; bulletins; requests for proposal or other procurement requirements; interview guides; oral communications; posting, notification, labeling, or similar disclosure requirements; telegraphic or telephonic requests; automated collection techniques; standard questionnaires used to monitor compliance with agency requirements; or any other techniques or technological methods used to monitor compliance with agency requirements. A ''collection of information'' may implicitly or explicitly include related recordkeeping requirements.

(2) Requirements by an agency for a person to obtain or compile information for the purpose of disclosure to members of the public or the public at large, through posting, notification, labeling or similar disclosure requirements constitute the ''collection of information'' whenever the same requirement to obtain or compile information would be a ''collection of information'' if the information were directly provided to the agency. The public disclosure of information originally supplied by the Federal government to the recipient for the purpose of disclosure to the public is not included within this definition.

(3) ''Collection of information'' includes questions posed to agencies, instrumentalities, or employees of the United States, if the results are to be used for general statistical purposes.

(4) As used in paragraph (c) of this section, ''ten or more persons'' refers to the persons to whom a collection of information is addressed by the agency within any 12-month period, and to any independent entities to which the initial addressee may reasonably be expected to transmit the collection of information during that period, including independent State, territorial, tribal or local entities and separately incorporated subsidiaries or affiliates. For the purposes of this definition of ''ten or more persons,'' ''persons'' does not include employees of the respondent acting within the scope of their employment, contractors engaged by a respondent for the purpose of complying with the collection of information, or current employees of the Federal government (including military reservists and members of the National Guard while on active duty) when acting within the scope of their employment, but it does include retired and other former Federal employees.

(i) Any recordkeeping, reporting, or disclosure requirement contained in a rule of general applicability is deemed to involve ten or more persons.

(ii) Any collection of information addressed to all or a substantial majority of an industry is presumed to involve ten or more persons.

(d) *Conduct or Sponsor.* A Federal agency is considered to ''conduct or sponsor'' a collection of information if the agency collects the information, causes another agency to collect the information, contracts or enters into a cooperative agreement with a person to collect the information, or requires a person to provide information to another person, or in similar ways causes another agency, contractor, partner in a cooperative agreement, or person to obtain, solicit, or require the disclosure to third parties or the public of information by or for an agency. A collection of information undertaken by a recipient of a Federal grant is considered to be ''conducted or sponsored'' by an agency only if:

(1) The recipient of a grant is conducting the collection of information at the specific request of the agency; or

(2) The terms and conditions of the grant require specific approval by the agency of the collection of information or collection procedures.

(e) *Director* means the Director of OMB, or his or her designee.

(f) *Display* means:

(1) In the case of forms, questionnaires, instructions, and other written collections of information sent or made available to potential respondents (other than in an electronic format), to place the currently valid OMB control number on the front page of the collection of information;

(2) In the case of forms, questionnaires, instructions, and other written collections of information sent or made available to potential respondents in an electronic format, to place the currently valid OMB control number in the instructions, near the title of the electronic collection instrument, or, foron-line applications, on the first screen viewed by the respondent;

(3) In the case of collections of information published in regulations, guidelines, and other issuances in the **Federal Register**, to publish the currently valid OMB control number in the **Federal Register** (for example, in the case of a collection of information in a

regulation, by publishing the OMB control number in the preamble or the regulatory text for the final rule, in a technical amendment to the final rule, or in a separate notice announcing OMB approval of the collection of information) and/or in the Code of Federal Regulations. For ease of future reference, OMB recommends that, even where an agency has already ''displayed'' the OMB control number by publishing it in the **Federal Register**, the agency also publish the currently valid OMB control number in the Code of Federal Regulations.

(4) In other cases, and where OMB determines in advance in writing that special circumstances exist, to use other means to inform potential respondents of the OMB control number.

(g) *Independent regulatory agency* means the Board of Governors of the Federal Reserve System, the Commodity Futures Trading Commission, the Consumer Product Safety Commission, the Federal Communications Commission, the Federal Deposit Insurance Corporation, the Federal Energy Regulatory Commission, the Federal Housing Finance Board, the Federal Maritime Commission, the Federal Trade Commission, the Interstate Commerce Commission, the Mine Enforcement Safety and Health Commission, the National Labor Relations Board, the Nuclear Regulatory Commission, the Occupational Safety and Health Review Commission, the Postal Rate Commission, the Securities and Exchange Commission, and any other similar agency designated by statute as a Federal independent regulatory agency or commission.

(h) *Information* means any statement of fact or opinion, regardless of form or format, whether in numerical, graphic, or narrative form, and whether oral or maintained on paper, electronic or other media. ''Information'' does not generally include items in the following categories; however, OMB may determine that any specific item constitutes ''information'':

(1) Affidavits, oaths, affirmations, certifications, receipts, changes of address, consents, or acknowledgments; provided that they entail no burden other than that necessary to identify the respondent, the date, the respondent's address, and the nature of the instrument (by contrast, a certification would likely involve the collection of ''information'' if an agency conducted or sponsored it as a substitute for a collection of information to collect evidence of, or to monitor, compliance with regulatory standards, because such a certification would generally entail burden in addition to that necessary to identify the respondent, the date, the respondent's address, and the nature of the instrument);

(2) Samples of products or of any other physical objects;

(3) Facts or opinions obtained through direct observation by an employee or agency of the sponsoring agency or through nonstandardized oral communication in connection with such direct observations;

(4) Facts or opinions submitted in response to general solicitations of comments from the public, published in the **Federal Register** or other publications, regardless of the form or format thereof, provided that no person is required to supply specific information pertaining to the commenter, other than that necessary for self-identification, as a condition of the agency's full consideration of the comment;

(5) Facts or opinions obtained initially or in follow-on requests, from individuals (including individuals in control groups) under treatment or clinical examination in connection with research on or prophylaxis to prevent a clinical disorder, direct treatment of that disorder, or the interpretation of biological analyses of body fluids, tissues, or other specimens, or the identification or classification of such specimens;

(6) A request for facts or opinions addressed to a single person;

(7) Examinations designed to test the aptitude, abilities, or knowledge of the persons tested and the collection of information for identification or classification in connection with such examinations;

(8) Facts or opinions obtained or solicited at or in connection with public hearings or meetings;

(9) Facts or opinions obtained or solicited through nonstandardized follow-up questions designed to clarify responses to approved collections of information; and

(10) Like items so designated by OMB.

(i) OMB refers to the Office of Management and Budget.

(j) Penalty includes the imposition by an agency or court of a fine or other punishment; a judgment for monetary damages or equitable relief; or the revocation, suspension, reduction, or denial of a license, privilege, right, grant, or benefit.

(k) Person means an individual, partnership, association, corporation (including operations of government-owned contractor-operated facilities), business trust, or legal representative, an organized group of individuals, a State, territorial, tribal, or local government or branch thereof, or a political subdivision of a State, territory, tribal, or local government or a branch of a political subdivision;

(l) Practical utility means the actual, not merely the theoretical or potential, usefulness of information to or for an agency, taking into account its accuracy, adequacy, and reliability, and the agency's ability to process the information it collects (or the public's ability to process the information it receives, in the case of a third-party or public disclosure) in a useful and timely fashion. In determining whether information will have ''practical utility,'' OMB will take into account whether the agency demonstrates actual timely use for the information either to carry out its functions or make it available to third-parties or the public, either directly or by means of a third-party or public posting, notification, labeling, or similar disclosure requirement, for the use of persons who have an interest in entities or transactions over which the agency has jurisdiction. In the case of recordkeeping or general purpose statistics, which are those statistics collected chiefly for public and general government uses and without primary reference to policy or program operations of the agency collecting the information, ''practical utility'' means that actual uses can be demonstrated.

(m) Recordkeeping requirement means a requirement imposed by or for an agency on persons to maintain specified records, including a requirement to:

(1) Retain such records;

(2) Notify third parties, the Federal government, or the public of the existence of such records;

(3) Disclose such records to third parties, the Federal government, or the public; or

(4) Report to third parties, the Federal government, or the public regarding such records.

§ 1320.4 Coverage.

(a) The requirements of this Part apply to all agencies as defined in § 1320.3(a) and to all collections of information conducted or sponsored by those agencies, as defined in § 1320.3(c) and (d), wherever conducted or sponsored, but, except as provided in paragraph (b) of this section, shall not apply to collections of information:

(1) During the conduct of a Federal criminal investigation or prosecution, or during the disposition of a particular criminal matter;

(2) During the conduct of a civil action to which the United States or any official or agency thereof is a part, or during the conduct of an administrative

action or investigation involving an agency against specific individuals or entities;

(3) By compulsory process pursuant to the Antitrust Civil Process Act and section 13 of the Federal Trade Commission Improvements Act of 1980; or

(4) During the conduct of intelligence activities as defined in section 3.4(e) of Executive Order No. 12333, issued December 4, 1981, or successor orders, or during the conduct of cryptologic activities that are communications security activities.

(b) The requirements of this part apply to the collection of information during the conduct of general investigations (other than information collected in an antitrust investigation to the extent provided in paragraph (a)(3) of this section) undertaken with reference to a category of individuals or entities such as a class of licensees or an entire industry.

(c) The exception in paragraph (a)(2) of this section applies during the entire course of the investigation or action, whether before or after formal charges or complaints are filed or formal administrative action is initiated, but only after a case file or equivalent is opened with respect to a particular party. In accordance with paragraph (b) of this section, collections of information prepared or undertaken with reference to a category of individuals or entities, such as a class of licensees or an industry, do not fall within this exception.

§ 1320.5 General requirements.

(a) An agency shall not conduct or sponsor a collection of information unless, in advance of the adoption or revision of the collection of information—

(1) The agency has—

(i) Conducted the review required in § 1320.8;

(ii) Evaluated the public comments received under § 1320.8(d) and § 1320.11;

(iii) Submitted to the Director, in accordance with such procedures and in such form as OMB may specify,

(A) The certification required under § 1320.9;

(B) The proposed collection of information in accordance with § 1320.10, § 1320.11, or § 1320.12, as appropriate;

(C) An explanation for the decision that it would not be appropriate, under § 1320.8(b)(1), for a proposed collection of information to display an expiration date;

(D) An explanation for the decision to provide for any payment or gift to respondents, other than remuneration of contractors or grantees;

(E) A statement indicating whether (and if so, to what extent) the proposed collection of information involves the use of automated collection techniques or other forms of information technology, e.g., permitting electronic submission of responses, and an explanation for the decision;

(F) A summary of the public comments received under § 1320.8(d), including actions taken by the agency in response to the comments, and the date and page of the publication in the **Federal Register** of the notice therefor; and

(G) Copies of pertinent statutory authority, regulations, and such related supporting materials as OMB may request; and

(iv) Published, except as provided in § 1320.13(d), a notice (requesting comments within 30 days) in the **Federal Register**—

(A) Stating that the agency has made such submission; and

(B) Setting forth—

(*1*) A title for the collection of information;

(*2*) A summary of the collection of information;

(*3*) A brief description of the need for the information and proposed use of the information;

(*4*) A description of the likely respondents and proposed frequency of response to the collection of information;

(*5*) An estimate of the total annual reporting and recordkeeping burden that shall result from the collection of information, which shall for each collection of information be disaggregated and set forth in terms of the estimated average burden hours per response, the proposed frequency of response, and the estimated number of likely respondents;

(*6*) Notice that comments may be submitted to the agency and OMB; and

(*7*) The time period within which the agency is requesting OMB to approve or disapprove the collection of information if, at the time of submittal of a collection of information for OMB review under § 1320.10, § 1320.11 or § 1320.12, the agency plans to request or has requested OMB to conduct its review on an emergency basis under § 1320.13; and

(2) OMB has approved the proposed collection of information, OMB's approval has been inferred under § 1320.10(c), § 1320.11(i), or § 1320.12(e), or OMB's disapproval has been voided by an independent regulatory agency under § 1320.15; and

(3) The agency has obtained from the Director a control number to be displayed upon the collection of information.

(b) In addition to the requirements in paragraph (a) of this section, an agency shall not conduct or sponsor a collection of information unless:

(1) The collection of information displays a currently valid OMB control number; and

(2)(i) The agency informs the potential persons who are to respond to the collection of information that such persons are not required to respond to the collection of information unless it displays a currently valid OMB control number.

(ii) An agency shall provide the information described in paragraph (b)(2)(i) of this section in a manner that is reasonably calculated to inform the public.

(A) In the case of forms, questionnaires, instructions, and other written collections of information sent or made available to potential respondents (other than in an electronic format), the information described in paragraph (b)(2)(i) of this section is provided ''in a manner that is reasonably calculated to inform the public'' if the agency includes it either on the form, questionnaire or other collection of information, or in the instructions for such collection.

(B) In the case of forms, questionnaires, instructions, and other written collections of information sent or made available to potential respondents in an electronic format, the information described in paragraph (b)(2)(i) of this section is provided ''in a manner that is reasonably calculated to inform the public'' if the agency places the currently valid OMB control number in the instructions, near the title of the electronic collection instrument, or, for on-line applications, on the first screen viewed by the respondent;

(C) In the case of collections of information published in regulations, guidelines, and other issuances in the **Federal Register**, the information described in paragraph (b)(2)(i) of this section is ''provided in a manner reasonably calculated to inform the public'' if the agency publishes such information in the **Federal Register** (for example, in the case of a collection of information in a regulation, by publishing such information in the preamble or the regulatory text, or in a technical amendment to the regulation, or in a separate notice announcing OMB approval of the collection of information) and/or in the Code of Federal Regulations. For ease of future reference, OMB recommends that, even where an agency has already provided such information and informed the

public by publishing it in the **Federal Register**, the agency is encouraged to also publish such information in the Code of Federal Regulations.

(D) In other cases, and where OMB determines in advance in writing that special circumstances exist, to use other means to inform potential respondents of such information.

(c)(1) Agencies shall submit all collections of information, other than those contained in proposed rules published for public comment in the **Federal Register** or in current regulations that were published as final rules in the **Federal Register**, in accordance with the requirements in § 1320.10. Agencies shall submit collections of information contained in interim final rules or direct final rules in accordance with the requirements of § 1320.10.

(2) Agencies shall submit collections of information contained in proposed rules published for public comment in the **Federal Register** in accordance with the requirements in § 1320.11.

(3) Agencies shall submit collections of information contained in current regulations that were published as final rules in the **Federal Register** in accordance with the requirements in § 1320.12.

(4) Special rules for emergency processing of collections of information are set forth in § 1320.13.

(5) For purposes of time limits for OMB review of collections of information, any submission properly submitted and received by OMB after 12:00 noon will be deemed to have been received on the following business day.

(d)(1) To obtain OMB approval of a collection of information, an agency shall demonstrate that it has taken every reasonable step to ensure that the proposed collection of information:

(i) Is the least burdensome necessary for the proper performance of the agency's functions to comply with legal requirements and achieve program objectives;

(ii) Is not duplicative of information otherwise accessible to the agency; and

(iii) Has practical utility. The agency shall also seek to minimize the cost to itself of collecting, processing, and using the information, but shall not do so by means of shifting disproportionate costs or burdens onto the public.

(2) Unless the agency is able to demonstrate, in its submission for OMB clearance, that such characteristic of the collection of information is necessary to satisfy statutory requirements or other substantial need, OMB will not approve a collection of information—

(i) Requiring respondents to report information to the agency more often than quarterly;

(ii) Requiring respondents to prepare a written response to a collection of information in fewer than 30 days after receipt of it;

(iii) Requiring respondents to submit more than an original and two copies of any document;

(iv) Requiring respondents to retain records, other than health, medical, government contract, grant-in-aid, or tax records, for more than three years;

(v) In connection with a statistical survey, that is not designed to produce valid and reliable results that can be generalized to the universe of study;

(vi) Requiring the use of a statistical data classification that has not been reviewed and approved by OMB;

(vii) Collecting information at the request of another country or an international organization unless such request has been reviewed, coordinated, and approved by OMB;

(viii) That includes a pledge of confidentiality that is not supported by authority established in statute or regulation, that is not supported by disclosure and data security policies that are consistent with the pledge, or which unnecessarily impedes sharing of data with other agencies for compatible confidential use; or

(ix) Requiring respondents to submit proprietary, trade secret, or other confidential information unless the agency can demonstrate that it has instituted procedures to protect the information's confidentiality to the extent permitted by law—

(e) OMB shall determine whether the collection of information, as submitted by the agency, is necessary for the proper performance of the agency's functions. In making this determination, OMB will take into account the criteria set forth in paragraph (d) of this section, and will consider whether the burden of the collection of information is justified by its practical utility. In addition:

(1) OMB will consider necessary any collection of information specifically mandated by statute or court order, but will independently assess any collection of information to the extent that the agency exercises discretion in its implementation; and

(2) OMB will consider necessary any collection of information specifically required by an agency rule approved or not acted upon by OMB under § 1320.11 or § 1320.12, but will independently assess any such collection of information to the extent that it deviates from the specifications of the rule.

(f) Except as provided in § 1320.15, to the extent that OMB determines that all or any portion of a collection of information is unnecessary, for any reason, the agency shall not engage in such collection or portion thereof. OMB will reconsider its disapproval of a collection of information upon the request of the agency head or Senior Official only if the sponsoring agency is able to provide significant new or additional information relevant to the original decision.

(g) An agency may not make a substantive or material modification to a collection of information after such collection of information has been approved by OMB, unless the modification has been submitted to OMB for review and approval under this art.

(h) An agency should consult with OMB before continuing to use OMB-approved forms or other collections of information after the expiration date printed thereon (in those cases for which an expiration date is printed thereon).

§ 1320.6 Public protection.

(a) Notwithstanding any other provision of law, no person shall be subject to any penalty for failing to comply with a collection of information that is subject to the requirements of this part if:

(1) The collection of information does not display, in accordance with § 1320.3(f) and § 1320.5(b)(1), a currently valid OMB control number assigned by the Director in accordance with the Act; or

(2) The agency fails to inform the potential person who is to respond to the collection of information, in accordance with § 1320.5(b)(2), that such person is not required to respond to the collection of information unless it displays a currently valid OMB control number.

(b) The protection provided by paragraph (a) of this section may be raised in the form of a complete defense, bar, or otherwise to the imposition of such penalty at any time during the agency administrative process in which such penalty may be imposed or in any judicial action applicable thereto.

(c) Whenever an agency has imposed a collection of information as a means for proving or satisfying a condition for the receipt of a benefit or the avoidance of a penalty, and the collection of information does not display a currently valid OMB control number or inform the potential persons who are to respond to the collection of information, as prescribed in § 1320.5(b), the agency shall not treat a person's failure to comply, in and of itself, as grounds for withholding the benefit or imposing the

penalty. The agency shall instead permit respondents to prove or satisfy the legal conditions in any other reasonable manner.

(1) If OMB disapproves the whole of such a collection of information (and the disapproval is not overridden under § 1320.15), the agency shall grant the benefit to (or not impose the penalty on) otherwise qualified persons without requesting further proof concerning the condition.

(2) If OMB instructs an agency to make a substantive or material change to such a collection of information (and the instruction is not overridden under § 1320.15), the agency shall permit respondents to prove or satisfy the condition by complying with the collection of information as so changed.

(d) Whenever a member of the public is protected from imposition of a penalty under this section for failure to comply with a collection of information, such penalty may not be imposed by an agency directly, by an agency through judicial process, or by any other person through administrative or judicial process.

(e) The protection provided by paragraph (a) of this section does not preclude the imposition of a penalty on a person for failing to comply with a collection of information that is imposed on the person by statute—e.g., 26 U.S.C. 6011(a) (statutory requirement for person to file a tax return), 42 U.S.C. 6938(c) (statutory requirement for person to provide notification before exporting hazardous waste).

§ 1320.7 Agency head and Senior Official responsibilities.

(a) Except as provided in paragraph (b) of this section, each agency head shall designate a Senior Official to carry out the responsibilities of the agency under the Act and this part. The Senior Official shall report directly to the head of the agency and shall have the authority, subject to that of the agency head, to carry out the responsibilities of the agency under the Act and this part.

(b) An agency head may retain full undelegated review authority for any component of the agency which by statute is required to be independent of any agency official below the agency head. For each component for which responsibility under the Act is not delegated to the Senior Official, the agency head shall be responsible for the performance of those functions.

(c) The Senior Official shall head an office responsible for ensuring agency compliance with and prompt, efficient, and effective implementation of the information policies and information resources management responsibilities established under the Act, including the reduction of information collection burdens on the public.

(d) With respect to the collection of information and the control of paperwork, the Senior Official shall establish a process within such office that is sufficiently independent of program responsibility to evaluate fairly whether proposed collections of information should be approved under this part.

(e) Agency submissions of collections of information for OMB review, and the accompanying certifications under § 1320.9, may be made only by the agency head or the Senior Official, or their designee.

§ 1320.8 Agency collection of information responsibilities.

The office established under § 1320.7 shall review each collection of information before submission to OMB for review under this part.

(a) This review shall include:

(1) An evaluation of the need for the collection of information, which shall include, in the case of an existing collection of information, an evaluation of the continued need for such collection;

(2) A functional description of the information to be collected;

(3) A plan for the collection of information;

(4) A specific, objectively supported estimate of burden, which shall include, in the case of an existing collection of information, an evaluation of the burden that has been imposed by such collection;

(5) An evaluation of whether (and if so, to what extent) the burden on respondents can be reduced by use of automated collection techniques or other forms of information technology, e.g., permitting electronic submission of responses;

(6) A test of the collection of information through a pilot program, if appropriate; and

(7) A plan for the efficient and effective management and use of the information to be collected, including necessary resources.

(b) Such office shall ensure that each collection of information:

(1) Is inventoried, displays a currently valid OMB control number, and, if appropriate, an expiration date;

(2) Is reviewed by OMB in accordance with the clearance requirements of 44 U.S.C. 3507; and

(3) Informs and provides fair notice to the potential persons to whom the collection of information is addressed of—

(i) The policy reasons the information is planned to be and/or has been collected;

(ii) The way such information is planned to be and/or has been used to further the proper performance of the functions of the agency;

(iii) An estimate, to the extent practicable, of the average burden of the collection (together with a request that the public direct to the agency any comments concerning the accuracy of this burden estimate and any suggestions for reducing this burden);

(iv) Whether responses to the collection of information are voluntary, required to obtain or retain a benefit (citing authority), or mandatory (citing authority);

(v) The nature and extent of confidentiality to be provided, if any (citing authority); and

(vi) The fact that an agency may not conduct or sponsor, and a person is not required to respond to, a collection of information unless it displays a currently valid OMB control number.

(c)(1) An agency shall provide the information described in paragraphs (b)(3) (i) through (v) of this section as follows:

(i) In the case of forms, questionnaires, instructions, and other written collections of information sent or made available to potential respondents (except in an electronic format), such information can be included either on the form, questionnaire or other collection of information, as part of the instructions for such collection, or in a cover letter or memorandum that accompanies the collection of information.

(ii) In the case of forms, questionnaires, instructions, and other written collections of information sent or made available to potential respondents in an electronic format, such information can be included either in the instructions, near the title of the electronic collection instrument, or, for on-line applications, on the first screen viewed by the respondent;

(iii) In the case of collections of information published in regulations, guidelines, and other issuances in the **Federal Register**, such information can be published in the **Federal Register** (for example, in the case of a collection of information in a regulation, by publishing such information in the preamble or the regulatory text to the final rule, or in a technical amendment to the final rule, or in a separate notice announcing OMB approval of the collection of information).

(iv) In other cases, and where OMB determines in advance in writing that special circumstances exist, agencies

may use other means to inform potential respondents.

(2) An agency shall provide the information described in paragraph (b)(3)(vi) of this section in accordance with § 1320.5(b)(2)(ii).

(d)(1) Before an agency submits a collection of information to OMB for approval, and except as provided in paragraphs (d)(3) and (d)(4) of this section, the agency shall provide 60-day notice in the **Federal Register**, and otherwise consult with members of the public and affected agencies concerning each proposed collection of information, to solicit comment to:

(i) Evaluate whether the proposed collection of information is necessary for the proper performance of the functions of the agency, including whether the information will have practical utility;

(ii) Evaluate the accuracy of the agency's estimate of the burden of the proposed collection of information;

(iii) Enhance the quality, utility, and clarity of the information to be collected; and

(iv) Minimize the burden of the collection of information on those who are to respond, including through the use of appropriate automated collection techniques or other forms of information technology, e.g., permitting electronic submission of responses.

(2) If the agency does not publish a copy of the proposed collection of information, together with the related instructions, as part of the **Federal Register** notice, the agency should—

(i) Provide more than 60-day notice to permit timely receipt, by interested members of the public, of a copy of the proposed collection of information and related instructions; or

(ii) Explain how and from whom an interested member of the public can request and obtain a copy without charge, including, if applicable, how the public can gain access to the collection of information and related instructions electronically on demand.

(3) The agency need not separately seek such public comment for any proposed collection of information contained in a proposed rule to be reviewed under § 1320.11, if the agency provides notice and comment through the notice of proposed rulemaking for the proposed rule and such notice specifically includes the solicitation of comments for the same purposes as are listed under paragraph (d)(1) of this section.

(4) The agency need not seek or may shorten the time allowed for such public comment if OMB grants an exemption from such requirement for emergency processing under § 1320.13.

§ 1320.9 Agency certifications for proposed collections of information.

As part of the agency submission to OMB of a proposed collection of information, the agency (through the head of the agency, the Senior Official, or their designee) shall certify (and provide a record supporting such certification) that the proposed collection of information—

(a) Is necessary for the proper performance of the functions of the agency, including that the information to be collected will have practical utility;

(b) Is not unnecessarily duplicative of information otherwise reasonably accessible to the agency;

(c) Reduces to the extent practicable and appropriate the burden on persons who shall provide information to or for the agency, including with respect to small entities, as defined in the Regulatory Flexibility Act (5 U.S.C. 601(6)), the use of such techniques as:

(1) Establishing differing compliance or reporting requirements or timetables that take into account the resources available to those who are to respond;

(2) The clarification, consolidation, or simplification of compliance and reporting requirements; or

(3) An exemption from coverage of the collection of information, or any part thereof;

(d) Is written using plain, coherent, and unambiguous terminology and is understandable to those who are to respond;

(e) Is to be implemented in ways consistent and compatible, to the maximum extent practicable, with the existing reporting and recordkeeping practices of those who are to respond;

(f) Indicates for each recordkeeping requirement the length of time persons are required to maintain the records specified;

(g) Informs potential respondents of the information called for under § 1320.8(b)(3);

(h) Has been developed by an office that has planned and allocated resources for the efficient and effective management and use of the information to be collected, including the processing of the information in a manner which shall enhance, where appropriate, the utility of the information to agencies and the public;

(i) Uses effective and efficient statistical survey methodology appropriate to the purpose for which the information is be collected; and

(j) To the maximum extent practicable, uses appropriate information technology to reduce burden and improve data quality, agency efficiency and responsiveness to the public.

§ 1320.10 Clearance of collections of information, other than those contained in proposed rules or in current rules.

Agencies shall submit all collections of information, other than those contained either in proposed rules published for public comment in the **Federal Register** (which are submitted under § 1320.11) or in current rules that were published as final rules in the **Federal Register** (which are submitted under § 1320.12), in accordance with the following requirements:

(a) On or before the date of submission to OMB, the agency shall, in accordance with the requirements in § 1320.5(a)(1)(iv), forward a notice to the **Federal Register** stating that OMB approval is being sought. The notice shall direct requests for information, including copies of the proposed collection of information and supporting documentation, to the agency, and shall request that comments be submitted to OMB within 30 days of the notice's publication. The notice shall direct comments to the Office of Information and Regulatory Affairs of OMB, Attention: Desk Officer for [name of agency]. A copy of the notice submitted to the **Federal Register**, together with the date of expected publication, shall be included in the agency's submission to OMB.

(b) Within 60 days after receipt of the proposed collection of information or publication of the notice under paragraph (a) of this section, whichever is later, OMB shall notify the agency involved of its decision to approve, to instruct the agency to make a substantive or material change to, or to disapprove, the collection of information, and shall make such decision publicly available. OMB shall provide at least 30 days for public comment after receipt of the proposed collection of information before making its decision, except as provided under § 1320.13. Upon approval of a collection of information, OMB shall assign an OMB control number and, if appropriate, an expiration date. OMB shall not approve any collection of information for a period longer than three years.

(c) If OMB fails to notify the agency of its approval, instruction to make substantive or material change, or disapproval within the 60-day period, the agency may request, and OMB shall assign without further delay, an OMB control number that shall be valid for not more than one year.

(d) As provided in § 1320.5(b) and § 1320.6(a), an agency may not conduct

or sponsor a collection of information unless the collection of information displays a currently valid OMB control number and the agency informs potential persons who are to respond to the collection of information that such persons are not required to respond to the collection of information unless it displays a currently valid OMB control number.

(e)(1) In the case of a collection of information not contained in a published current rule which has been approved by OMB and has a currently valid OMB control number, the agency shall:

(i) Conduct the review established under § 1320.8, including the seeking of public comment under § 1320.8(d); and

(ii) After having made a reasonable effort to seek public comment, but no later than 60 days before the expiration date of the OMB control number for the currently approved collection of information, submit the collection of information for review and approval under this Part, which shall include an explanation of how the agency has used the information that it has collected.

(2) The agency may continue to conduct or sponsor the collection of information while the submission is pending at OMB.

(f) Prior to the expiration of OMB's approval of a collection of information, OMB may decide on its own initiative, after consultation with the agency, to review the collection of information. Such decisions will be made only when relevant circumstances have changed or the burden estimates provided by the agency at the time of initial submission were materially in error. Upon notification by OMB of its decision to review the collection of information, the agency shall submit it to OMB for review under this part.

(g) For good cause, after consultation with the agency, OMB may stay the effectiveness of its prior approval of any collection of information that is not specifically required by agency rule; in such case, the agency shall cease conducting or sponsoring such collection of information while the submission is pending, and shall publish a notice in the **Federal Register** to that effect.

§ 1320.11 Clearance of collections of information in proposed rules.

Agencies shall submit collections of information contained in proposed rules published for public comment in the **Federal Register** in accordance with the following requirements:

(a) The agency shall include, in accordance with the requirements in § 1320.5(a)(1)(iv), in the preamble to the Notice of Proposed Rulemaking a statement that the collections of information contained in the proposed rule, and identified as such, have been submitted to OMB for review under section 3507(d) of the Act. The statement shall request that comments be submitted to OMB within 60 days of the notice's publication. The notice shall direct comments to the Office of Information and Regulatory Affairs of OMB, Attention: Desk Officer for [name of agency].

(b) All such submissions shall be made to OMB not later than the day on which the Notice of Proposed Rulemaking is published in the **Federal Register**, in such form and in accordance with such procedures as OMB may direct. Such submissions shall include a copy of the proposed regulation and preamble.

(c) Within 60 days of publication of the proposed rule, but subject to paragraph (e) of this section, OMB may file public comments on collection of information provisions. The OMB comments shall be in the form of an OMB Notice of Action, which shall be sent to the Senior Official or agency head, or their designee, and which shall be made a part of the agency's rulemaking record.

(d) If an agency submission is not in compliance with paragraph (b) of this section, OMB may, subject to paragraph (e) of this section, disapprove the collection of information in the proposed rule within 60 days of receipt of the submission. If an agency fails to submit a collection of information subject to this section, OMB may, subject to paragraph (e) of this section, disapprove it at any time.

(e) OMB shall provide at least 30 days after receipt of the proposed collection of information before submitting its comments or making its decision, except as provided under § 1320.13.

(f) When the final rule is published in the **Federal Register**, the agency shall explain how any collection of information contained in the final rule responds to any comments received from OMB or the public. The agency shall include an identification and explanation of any modifications made in the rule, or explain why it rejected the comments. If requested by OMB, the agency shall include OMB's comments in the preamble to the final rule.

(g) If OMB has not filed public comments under paragraph (c) of this section, or has approved without conditions the collection of information contained in a rule before the final rule is published in the **Federal Register**, OMB may assign an OMB control number prior to publication of the final rule.

(h) On or before the date of publication of the final rule, the agency shall submit the final rule to OMB, unless it has been approved under paragraph (g) of this section (and not substantively or materially modified by the agency after approval). Not later than 60 days after publication, but subject to paragraph (e) of this section, OMB shall approve, instruct the agency to make a substantive or material change to, or disapprove, the collection of information contained in the final rule. Any such instruction to change or disapprove may be based on one or more of the following reasons, as determined by OMB:

(1) The agency has failed to comply with paragraph (b) of this section;

(2) The agency had substantially modified the collection of information contained in the final rule from that contained in the proposed rule without providing OMB with notice of the change and sufficient information to make a determination concerning the modified collection of information at least 60 days before publication of the final rule; or

(3) In cases in which OMB had filed public comments under paragraph (c) of this section, the agency's response to such comments was unreasonable, and the collection of information is unnecessary for the proper performance of the agency's functions.

(i) After making such decision to approve, to instruct the agency to make a substantive or material change to, or disapprove, the collection of information, OMB shall so notify the agency. If OMB approves the collection of information or if it has not acted upon the submission within the time limits of this section, the agency may request, and OMB shall assign an OMB control number. If OMB disapproves or instructs the agency to make substantive or material change to the collection of information, it shall make the reasons for its decision publicly available.

(j) OMB shall not approve any collection of information under this section for a period longer than three years. Approval of such collection of information will be for the full three-year period, unless OMB determines that there are special circumstances requiring approval for a shorter period.

(k) After receipt of notification of OMB's approval, instruction to make a substantive or material change to, disapproval of a collection of information, or failure to act, the agency shall publish a notice in the **Federal Register** to inform the public of OMB's decision.

(l) As provided in § 1320.5(b) and § 1320.6(a), an agency may not conduct or sponsor a collection of information unless the collection of information displays a currently valid OMB control number and the agency informs potential persons who are to respond to the collection of information that such persons are not required to respond to the collection of information unless it displays a currently valid OMB control number.

§ 1320.12 Clearance of collections of information in current rules.

Agencies shall submit collections of information contained in current rules that were published as final rules in the **Federal Register** in accordance with the following procedures:

(a) In the case of a collection of information contained in a published current rule which has been approved by OMB and has a currently valid OMB control number, the agency shall:

(1) Conduct the review established under § 1320.8, including the seeking of public comment under § 1320.8(d); and

(2) After having made a reasonable effort to seek public comment, but no later than 60 days before the expiration date of the OMB control number for the currently approved collection of information, submit the collection of information for review and approval under this part, which shall include an explanation of how the agency has used the information that it has collected.

(b)(1) In the case of a collection of information contained in a published current rule that was not required to be submitted for OMB review under the Paperwork Reduction Act at the time the collection of information was made part of the rule, but which collection of information is now subject to the Act and this Part, the agency shall:

(i) Conduct the review established under § 1320.8, including the seeking of public comment under § 1320.(8)(d); and

(ii) After having made a reasonable effort to seek public comment, submit the collection of information for review and approval under this part, which shall include an explanation of how the agency has used the information that it has collected.

(2) The agency may continue to conduct or sponsor the collection of information while the submission is pending at OMB. In the case of a collection of information not previously approved, a control number shall be granted for such period, which shall not exceed 60 days, unless extended by the Director for an additional 60 days. Upon assignment of an interim OMB control number, and in accordance with § 1320.3(f) and § 1320.5(b), the agency shall display the number and inform the potential persons who are to respond to the collection of information that such persons are not required to respond to the collection of information unless it displays a currently valid OMB control number and the agency informs potential persons who are to respond to the collection of information that such persons are not required to respond to the collection of information unless it displays a currently valid OMB control number.

(c) On or before the day of submission to OMB under paragraphs (a) or (b) of this section, the agency shall, in accordance with the requirements set forth in § 1320.5(a)(1)(iv), forward a notice to the **Federal Register** stating that OMB review is being sought. The notice shall direct requests for copies of the collection of information and supporting documentation to the agency, and shall request that comments be submitted to OMB within 30 days of the notice's publication. The notice shall direct comments to the Office of Information and Regulatory Affairs of OMB, Attention: Desk Officer for [name of agency]. A copy of the notice submitted to the **Federal Register**, together with the date of expected publication, shall be included in the agency's submission to OMB.

(d) Within 60 days after receipt of the collection of information or publication of the notice under paragraph (c) of this section, whichever is later, OMB shall notify the agency involved of its decision to approve, to instruct the agency to make a substantive or material change to, or to disapprove, the collection of information, and shall make such decision publicly available. OMB shall provide at least 30 days for public comment after receipt of the proposed collection of information before making its decision, except as provided under § 1320.13.

(e) (1) Upon approval of a collection of information, OMB shall assign an OMB control number and an expiration date. OMB shall not approve any collection of information for a period longer than three years. Approval of any collection of information submitted under this section will be for the full three-year period, unless OMB determines that there are special circumstances requiring approval for a shorter period.

(2) If OMB fails to notify the agency of its approval, instruction to make substantive or material change, or disapproval within the 60-day period, the agency may request, and OMB shall assign without further delay, an OMB control number that shall be valid for not more than one year.

(3) As provided in § 1320.5(b) and § 1320.6(a), an agency may not conduct or sponsor a collection of information unless the collection of information displays a currently valid OMB control number and the agency informs potential persons who are to respond to the collection of information that such persons are not required to respond to the collection of information unless it displays a currently valid OMB control number.

(f) (1) If OMB disapproves a collection of information contained in an existing rule, or instructs the agency to make a substantive or material change to a collection of information contained in an existing rule, OMB shall:

(i) Publish an explanation thereof in the **Federal Register**; and

(ii) Instruct the agency to undertake a rulemaking within a reasonable time limited to consideration of changes to the collection of information contained in the rule and thereafter to subject the collection of information for approval or disapproval under § 1320.10 or § 1320.11, as appropriate; and

(iii) Extend the existing approval of the collection of information (including an interim approval granted under paragraph (b) of this section) for the duration of the period required for consideration of proposed changes, including that required for OMB approval or disapproval of the collection of information under § 1320.10 or § 1320.11, as appropriate.

(2) Thereafter, the agency shall, within a reasonable period of time not to exceed 120 days, undertake such procedures as are necessary in compliance with the Administrative Procedure Act and other applicable law to amend or rescind the collection of information, and shall notify the public through the **Federal Register**. Such notice shall identify the proposed changes in the collections of information and shall solicit public comment on retention, change, or rescission of such collections of information. If the agency employs notice and comment rulemaking procedures for amendment or rescission of the collection of information, publication of the above in the **Federal Register** and submission to OMB shall initiate OMB clearance procedures under section 3507(d) of the Act and § 1320.11. All procedures shall be completed within a reasonable period of time to be determined by OMB in consultation with the agency.

(g) OMB may disapprove, in whole or in part, any collection of information

subject to the procedures of this section, if the agency:

(1) Has refused within a reasonable time to comply with an OMB instruction to subject the collection of information for review;

(2) Has refused within a reasonable time to initiate procedures to change the collection of information; or

(3) Has refused within a reasonable time to publish a final rule continuing the collection of information, with such changes as may be appropriate, or otherwise complete the procedures for amendment or rescission of the collection of information.

(h) (1) Upon disapproval by OMB of a collection of information subject to this section, except as provided in paragraph (f)(1)(iii) of this section, the OMB control number assigned to such collection of information shall immediately expire, and no agency shall conduct or sponsor such collection of information. Any such disapproval shall constitute disapproval of the collection of information contained in the Notice of Proposed Rulemaking or other submissions, and also of the preexisting information collection instruments directed at the same collection of information and therefore constituting essentially the same collection of information.

(2) The failure to display a currently valid OMB control number for a collection of information contained in a current rule, or the failure to inform the potential persons who are to respond to the collection of information that such persons are not required to respond to the collection of information unless it displays a currently valid OMB control number, does not, as a legal matter, rescind or amend the rule; however, such absence will alert the public that either the agency has failed to comply with applicable legal requirements for the collection of information or the collection of information has been disapproved, and that therefore the portion of the rule containing the collection of information has no legal force and effect and the public protection provisions of 44 U.S.C. 3512 apply.

(i) Prior to the expiration of OMB's approval of a collection of information in a current rule, OMB may decide on its own initiative, after consultation with the agency, to review the collection of information. Such decisions will be made only when relevant circumstances have changed or the burden estimates provided by the agency at the time of initial submission were materially in error. Upon notification by OMB of its decision to review the collection of information, the agency shall submit it to OMB for review under this part.

§ 1320.13 Emergency processing.

An agency head or the Senior Official may request OMB to authorize emergency processing of submissions of collections of information.

(a) Any such request shall be accompanied by a written determination that:

(1) The collection of information:

(i) Is needed prior to the expiration of time periods established under this part; and

(ii) Is essential to the mission of the agency; and

(2) The agency cannot reasonably comply with the normal clearance procedures under this part because:

(i) Public harm is reasonably likely to result if normal clearance procedures are followed;

(ii) An unanticipated event has occurred; or

(iii) The use of normal clearance procedures is reasonably likely to prevent or disrupt the collection of information or is reasonably likely to cause a statutory or court ordered deadline to be missed.

(b) The agency shall state the time period within which OMB should approve or disapprove the collection of information.

(c) The agency shall submit information indicating that it has taken all practicable steps to consult with interested agencies and members of the public in order to minimize the burden of the collection of information.

(d) The agency shall set forth in the **Federal Register** notice prescribed by § 1320.5(a)(1)(iv), unless waived or modified under this section, a statement that it is requesting emergency processing, and the time period stated under paragraph (b) of this section.

(e) OMB shall approve or disapprove each such submission within the time period stated under paragraph (b) of this section, provided that such time period is consistent with the purposes of this Act.

(f) If OMB approves the collection of information, it shall assign a control number valid for a maximum of 90 days after receipt of the agency submission.

§ 1320.14 Public access.

(a) In order to enable the public to participate in and provide comments during the clearance process, OMB will ordinarily make its paperwork docket files available for public inspection during normal business hours. Notwithstanding other provisions of this part, and to the extent permitted by law, requirements to publish public notices or to provide materials to the public may be modified or waived by the Director to the extent that such public participation in the approval process would defeat the purpose of the collection of information; jeopardize the confidentiality of proprietary, trade secret, or other confidential information; violate State or Federal law; or substantially interfere with an agency's ability to perform its statutory obligations.

(b) Agencies shall provide copies of the material submitted to OMB for review promptly upon request by any person.

(c) Any person may request OMB to review any collection of information conducted by or for an agency to determine, if, under this Act and this part, a person shall maintain, provide, or disclose the information to or for the agency. Unless the request is frivolous, OMB shall, in coordination with the agency responsible for the collection of information:

(1) Respond to the request within 60 days after receiving the request, unless such period is extended by OMB to a specified date and the person making the request is given notice of such extension; and

(2) Take appropriate remedial action, if necessary.

§ 1320.15 Independent regulatory agency override authority.

(a) An independent regulatory agency which is administered by two or more members of a commission, board, or similar body, may by majority vote void:

(1) Any disapproval, instruction to such agency to make material or substantive change to, or stay of the effectiveness of OMB approval of, any collection of information of such agency; or

(2) An exercise of authority under § 1320.10(g) concerning such agency.

(b) The agency shall certify each vote to void such OMB action to OMB, and explain the reasons for such vote. OMB shall without further delay assign an OMB control number to such collection of information, valid for the length of time requested by the agency, up to three years, to any collection of information as to which this vote is exercised. No override shall become effective until the independent regulatory agency, as provided in § 1320.5(b) and § 1320.6(2), has displayed the OMB control number and informed the potential persons who are to respond to the collection of information that such persons are not required to respond to the collection of information unless it displays a currently valid OMB control number.

§ 1320.16 Delegation of approval authority.

(a) OMB may, after complying with the notice and comment procedures of the Administrative Procedure Act, delegate OMB review of some or all of an agency's collections of information to the Senior Official, or to the agency head with respect to those components of the agency for which he or she has not delegated authority.

(b) No delegation of review authority shall be made unless the agency demonstrates to OMB that the Senior Official or agency head to whom the authority would be delegated:

(1) Is sufficiently independent of program responsibility to evaluate failure whether proposed collections of information should be approved;

(2) Has sufficient resources to carry out this responsibility effectively; and

(3) Has established an agency review process that demonstrates the prompt, efficient, and effective performance of collection of information review responsibilities.

(c) OMB may limit, condition, or rescind, in whole or in part, at any time, such delegations of authority, and reserves the right to review any individual collection of information, or part thereof, conducted or sponsored by an agency, at any time.

(d) Subject to the provisions of this part, and in accordance with the terms and conditions of each delegation as specified in appendix A to this part, OMB delegates review and approval authority to the following agencies:

(1) Board of Governors of the Federal Reserve System; and

(2) Managing Director of the Federal Communications Commission.

§ 1320.17 Information collection budget.

Each agency's Senior Official, or agency head in the case of any agency for which the agency head has not delegated responsibility under the Act for any component of the agency to the Senior Official, shall develop and submit to OMB, in such form, at such time, and in accordance with such procedures as OMB may prescribe, an annual comprehensive budget for all collections of information from the public to be conducted in the succeeding twelve months. For good cause, OMB may exempt any agency from this requirement.

§ 1320.18 Other authority.

(a) OMB shall determine whether any collection of information or other matter is within the scope of the Act, or this part.

(b) In appropriate cases, after consultation with the agency, OMB may initiate a rulemaking proceeding to determine whether an agency's collection of information is consistent with statutory standards. Such proceedings shall be in accordance with the informal rulemaking procedures of the Administrative Procedure Act.

(c) Each agency is responsible for complying with the information policies, principles, standards, and guidelines prescribed by OMB under this Act.

(d) To the extent permitted by law, OMB may waive any requirements contained in this part.

(e) Nothing in this part shall be interpreted to limit the authority of OMB under this Act, or any other law. Nothing in this part or this Act shall be interpreted as increasing or decreasing the authority of OMB with respect to the substantive policies and programs of the agencies.

Appendix A—Agencies With Delegated Review and Approval Authority

1. The Board of Governors of the Federal Reserve System

(a) Authority to review and approve collection of information requests, collection of information requirements, and collections of information in current rules is delegated to the Board of Governors of the Federal Reserve System.

(1) This delegation does not include review and approval authority over any new collection of information or any modification to an existing collection of information that:

(i) Is proposed to be collected as a result of a requirement or other mandate of the Federal Financial Institutions Examination Council, or other Federal executive branch entities with authority to require the Board to conduct or sponsor a collection of information.

(ii) Is objected to by another Federal agency on the grounds that agency requires information currently collected by the Board, that the currently collected information is being deleted from the collection, and the deletion will have a serious adverse impact on the agency's program, provided that such objection is certified to OMB by the head of the Federal agency involved, with a copy to the Board, before the end of the comment period specified by the Board on the **Federal Register** notices specified in paragraph (a)(3)(i) of this section 1.

(iii) Would cause the burden of the information collections conducted or sponsored by the Board to exceed by the end of the fiscal year the Information Collection Budget allowance provided to the Board by OMB for the fiscal year-end.

(2) The Board may ask that OMB review and approve collections of information covered by this delegation.

(3) In exercising delegated authority, the Board will:

(i) Provide the public, to the extent possible and appropriate, with reasonable opportunity to comment on collections of information under review prior to taking final action approving the collection. Reasonable opportunity for public comment will include publishing a notice in the **Federal Register** informing the public of the proposed collection of information, announcing the beginning of a 60-day public comment period, and the availability of copies of the ''clearance package,'' to provide the public with the opportunity to comment. Such **Federal Register** notices shall also advise the public that they may also send a copy of their comments to the Federal Reserve Board and to the OMB/OIRA Desk Officer.

(A) Should the Board determine that a new collection of information or a change in an existing collection must be instituted quickly and that public participation in the approval process would defeat the purpose of the collection or substantially interfere with the Board's ability to perform its statutory obligation, the Board may temporarily approve of the collection of information for a period not to exceed 90 days without providing opportunity for public comment.

(B) At the earliest practical date after approving the temporary extension to the collection of information, the Board will publish a **Federal Register** notice informing the public of its approval of the collection of information and indicating why immediate action was necessary. In such cases, the Board will conduct a normal delegated review and publish a notice in the **Federal Register** soliciting public comment on the intention to extend the collection of information for a period not to exceed three years.

(ii) Provide the OMB/OIRA Desk Officer for the Federal Reserve Board with a copy of the Board's **Federal Register** notice not late than the day the Board files the notice with the Office of the **Federal Register**.

(iii) Assure that approved collections of information are reviewed not less frequently than once every three years, and that such reviews are normally conducted before the expiration date of the prior approval. Where the review has not been completed prior to the expiration date, the Board may extend the report, for up to three months, without public notice in order to complete the review and consequent revisions, if any. There may also be other circumstances in which the Board determines that a three-month extension without public notice is appropriate.

(iv) Take every reasonable step to conduct the review established under 5 CFR 1320.8, including the seeking of public comment under 5 CFR 1320.8(d). In determining whether to approve a collection of information, the Board will consider all comments received from the public and other agencies. The Board will not approve a collection of information that it determines does not satisfy the guidelines set forth in 5 CFR 1320.5(d)(2), unless it determines that departure from these guidelines is necessary to satisfy statutory requirements or other substantial need.

(v)(A) Assure that each approved collection of information displays, as required by 5 CFR 1320.6, a currently valid OMB control number and the fact that a person is not required to respond to a collection of information unless it displays a currently valid OMB control number.

(B) Assure that all collections of information, except those contained in regulations, display the expiration date of the approval, or, in case the expiration date has been omitted, explain the decision that it would not be appropriate, under 5 CFR 1320.5(a)(1)(iii)(C), for a proposed collection of information to display an expiration date.

(C) Assure that each collection of information, as required by 5 CFR 1320.8(b)(3), informs and provides fair notice to the potential respondents of why the information is being collected; the way in which such information is to be used; the estimated burden; whether responses are voluntary, required, required to obtain a benefit, or mandatory; the confidentiality to be provided; and the fact that an agency may not conduct or sponsor, and the respondent is not required to respond to, a collection of information unless it displays a currently valid OMB control number.

(vi) Assure that each approved collection of information, together with a completed form OMB 83–I, a supporting statement, a copy of each comment received from the public and other agencies in response to the Board's **Federal Register** notice or a summary of these comments, the certification required by 5 CFR 1320.9, and a certification that the Board has approved of the collection of information in accordance with the provisions of this delegation is transmitted to OMB for incorporation into OMB's public docket files. Such transmittal shall be made as soon as practical after the Board has taken final action approving the collection. However, no collection of information may be instituted until the Board receives written or oral notification from OMB or OMB staff that the transmittal has been received.

(b) OMB will:

(1) Provide the Board in advance with a block of control numbers which the Board will assign in sequential order to and display on, new collections of information.

(2) Provide a written notice of action to the Board indicating that the Board approvals of collections of information that have been received by OMB and incorporated into OMB's public docket files and an inventory of currently approved collections of information.

(3) Review any collection of information referred by the Board in accordance with the provisions of section 1(a)(2) of this appendix.

(c) OMB may review the Board's paperwork review process under the delegation. The Board will cooperate in carrying out such a review. The Board will respond to any recommendations resulting from such review and, if it finds the recommendations to be appropriate, will either accept the recommendations or propose an alternative approach to achieve the intended purpose.

(d) This delegation may, as provided by 5 CFR 1320.16(c), be limited, conditioned, or rescinded, in whole or in part at any time. OMB will exercise this authority only in unusual circumstances and, in those rare instances, will do so, subject to the provisions of 5 CFR 1320.10(f) and 1320.10(g), prior to the expiration of the time period set for public comment in the Board's **Federal Register** notices and generally only if:

(1) Prior to the commencement of a Board review (e.g., during the review for the Information Collection Budget). OMB has notified the Board that it intends to review a specific new proposal for the collection of information or the continued use (with or without modification) of an existing collection;

(2) There is substantial public objection to a proposed information collection: or

(3) OMB determines that a substantially inadequate and inappropriate lead time has been provided between the final announcement date of the proposed requirement and the first date when the information is to be submitted or disclosed. When OMB exercises this authority it will consider that the period of its review began the date that OMB received the **Federal Register** notice provided for in section 1(a)(3)(i) of this appendix.

(e) Where OMB conducts a review of a Board information collection proposal under section 1(a)(1), 1(a)(2), or 1(d) of this appendix, the provisions of 5 CFR 1320.13 continue to apply.

2. The Managing Director of the Federal Communications Commission.

(a) Authority to review and approve currently valid (OMB-approved) collections of information, including collections of information contained in existing rules, that have a total annual burden of 5,000 hours or less and a burden of less than 500 hours per respondent is delegated to the Managing Director of the Federal Communications Commission.

(1) This delegation does not include review and approval authority over any new collection of information, any collections whose approval has lapsed, any substantive or material modification to existing collections, any reauthorization of information collections employing statistical methods, or any information collections that exceed a total annual burden of 5,000 hours or an estimated burden of 500 hours per respondent.

(2) The Managing Director may ask that OMB review and approve collections of information covered by the delegation.

(3) In exercising delegated authority, the Managing Director will:

(i) Provide the public, to the extent possible and appropriate, with reasonable opportunity to comment on collections of information under review prior to taking final action on reauthorizing an existing collection. Reasonable opportunity for public comment will include publishing a notice in the **Federal Register** and an FCC Public Notice informing the public that a collection of information is being extended and announcing the beginning of a 60-day comment period, notifying the public of the ''intent to extend an information collection,'' and providing the public with the opportunity to comment on the need for the information, its practicality, the accuracy of the agency's burden estimate, and on ways to minimize burden, including the use of automated collection techniques or other forms of information technology, e.g., permitting electronic submission of responses. Such notices shall advise the public that they may also send a copy of their comments to the OMB/Office of Information and Regulatory Affairs desk officer for the Commission.

(A) Should the Managing Director determine that a collection of information that falls within the scope of this delegation must be reauthorized quickly and that public participation in the reauthorization process interferes with the Commission's ability to perform its statutory obligation, the Managing Director may temporarily reauthorize the extension of an information collection, for a period not to exceed 90 days, without providing opportunity for public comment.

(B) At the earliest practical date after granting this temporary extension to an information collection, the Managing Director will conduct a normal delegated review and publish a **Federal Register** notice soliciting public comment on its intention to extend the collection of information for a period not to exceed three years.

(ii) Assure that approved collections of information are reviewed not less frequently than once every three years and that such reviews are conducted before the expiration date of the prior approval. When the review is not completed prior to the expiration date, the Managing Director will submit the lapsed information collection to OMB for review and reauthorization.

(iii) Assure that each reauthorized collection of information displays an OMB control number and, except for those contained in regulations or specifically designated by OMB, displays the expiration date of the approval.

(iv) Inform and provide fair notice to the potential respondents, as required by 5 CFR 1320.8(b)(3), of why the information is being collected; the way in which such information is to be used; the estimated burden; whether responses are voluntary, required, required to obtain a benefit, or mandatory; the confidentiality to be provided; and the fact that an agency may not conduct or sponsor, and the respondent is not required to respond to, a collection of information unless it displays a currently valid OMB control number.

(v) Transmit to OMB for incorporation into OMB's public docket files, a report of delegated approval certifying that the Managing Director has reauthorized each collection of information in accordance with the provisions of this delegation. The Managing Director shall also make the certification required by 5 CFR 1320.9, e.g., that the approved collection of information reduces to the extent practicable and appropriate, the burden on respondents, including, for small business, local government, and other small entities, the use of the techniques outlined in the Regulatory Flexibility Act. Such transmittals shall be made no later than 15 days after the Managing Director has taken final action reauthorizing the extension of an information collection.

(vi) Ensure that the personnel in the Commission's functional bureaus and offices responsible for managing information collections receive periodic training on procedures related to meeting the requirements of this part and the Act.

(b) OMB will:

(1) Provide notice to the Commission acknowledging receipt of the report of delegated approval and its incorporation into OMB's public docket files and inventory of currently approved collections of information.

(2) Act upon any request by the Commission to review a collection of information referred by the Commission in accordance with the provisions of section 2(a)(2) of this appendix.

(3) Periodically assess, at its discretion, the Commission's paperwork review process as administered under the delegation. The Managing Director will cooperate in carrying out such an assessment. The Managing Director will respond to any recommendations resulting from such a review and, if it finds the recommendations to be appropriate, will either accept the recommendation or propose an alternative approach to achieve the intended purpose.

(c) This delegation may, as provided by 5 CFR 1320.16(c), be limited, conditioned, or rescinded, in whole or in part at any time. OMB will exercise this authority only in unusual circumstances.

[FR Doc. 95–14007 Filed 6–7–95; 8:45 am]

BILLING CODE 3110–01–P

Reader Aids

Federal Register

Vol. 60, No. 110

Thursday, June 8, 1995

INFORMATION AND ASSISTANCE

Federal Register

Index, finding aids & general information	**202–523–5227**
Public inspection announcement line	**523–5215**
Corrections to published documents	**523–5237**
Document drafting information	**523–3187**
Machine readable documents	**523–4534**

Code of Federal Regulations

Index, finding aids & general information	**523–5227**
Printing schedules	**523–3419**

Laws

Public Laws Update Service (numbers, dates, etc.)	**523–6641**
Additional information	**523–5230**

Presidential Documents

Executive orders and proclamations	**523–5230**
Public Papers of the Presidents	**523–5230**
Weekly Compilation of Presidential Documents	**523–5230**

The United States Government Manual

General information	**523–5230**

Other Services

Data base and machine readable specifications	**523–4534**
Guide to Record Retention Requirements	**523–3187**
Legal staff	**523–4534**
Privacy Act Compilation	**523–3187**
Public Laws Update Service (PLUS)	**523–6641**
TDD for the hearing impaired	**523–5229**

ELECTRONIC BULLETIN BOARD

Free **Electronic Bulletin Board** service for Public Law numbers, Federal Register finding aids, and list of documents on public inspection. **202–275–0920**

FAX-ON-DEMAND

You may access our Fax-On-Demand service. You only need a fax machine and there is no charge for the service except for long distance telephone charges the user may incur. The list of documents on public inspection and the daily Federal Register's table of contents are available using this service. The document numbers are 7050-Public Inspection list and 7051-Table of Contents list. The public inspection list will be updated immediately for documents filed on an emergency basis.
NOTE: YOU WILL ONLY GET A LISTING OF DOCUMENTS ON FILE AND NOT THE ACTUAL DOCUMENT. Documents on public inspection may be viewed and copied in our office located at 800 North Capitol Street, N.W., Suite 700. The Fax-On-Demand telephone number is: **301–713–6905**

FEDERAL REGISTER PAGES AND DATES, JUNE

28509–28700.....1
28701–29462.....2
29463–29748.....5
29749–29958.....6
29959–30182.....7
30183–30456.....8

CFR PARTS AFFECTED DURING JUNE

At the end of each month, the Office of the Federal Register publishes separately a List of CFR Sections Affected (LSA), which lists parts and sections affected by documents published since the revision date of each title.

3 CFR

Proclamations:
6806.....28509
6807.....29957
Administrative Orders:
Presidential Determination:
No. 95–21 of May 16, 1995.....28699
No. 95–22 of May 19, 1995.....29463

5 CFR

890.....28511
Proposed Rules:
1320.....30438

7 CFR

Ch. VI.....28511
319.....30157
401.....29749, 29959
443.....29959
457.....29959
620.....28511
945.....29724
947.....29750
953.....28701
981.....28520
1007.....29436
1093.....29436
1094.....29436
1096.....29436
1099.....29465
1108.....29436
1220.....29960
1230.....29962
1468.....28522
Proposed Rules:
273.....29767
982.....30170
984.....28744
1126.....28745
1150.....30013
1280.....28747

8 CFR

3.....29467, 29469
204.....29751
Proposed Rules:
204.....29771

9 CFR

Proposed Rules:
3.....28834
98.....29781
130.....30157
201.....29506
308.....28547
310.....28547
318.....28547
320.....28547
325.....28547
326.....28547
327.....28547
381.....28547

10 CFR

440.....29469
Proposed Rules:
50.....29784

12 CFR

19.....30183
202.....29965
226.....29969
Proposed Rules:
203.....30013
1750.....30201

13 CFR

121.....29969
124.....29969

14 CFR

39.....28524, 28525, 28527, 28529, 28702, 28715, 29978, 29979, 29981, 29982, 30184
71.....28531, 28716
97.....28531, 28532
121.....29753
125.....29753
127.....29753
129.....29753
135.....29753
Proposed Rules:
25.....28547, 28550, 30019
39.....28761, 28763, 29511, 29513, 29795, 29797, 29800, 30208
71.....28551, 28764, 30027, 30028, 30029
73.....28552
135.....28765
234.....29514

15 CFR

Proposed Rules:
792.....30030

16 CFR

Proposed Rules:
310.....30406
409.....28554
1307.....29518

17 CFR

200.....28717
240.....28717

18 CFR

284.....30186

19 CFR

Proposed Rules:
10.....29520

12....29520
102....29520
134....29520
177....29520

20 CFR

200....29983
320....28534
Proposed Rules:
404....28767
410....28767

21 CFR

510....29754
522....29754, 29984, 29985
558....29481, 29482, 29483
1220....29986
1308....28718
Proposed Rules:
54....29801
182....28555
186....28555
872....30032

22 CFR

21....29987
41....30188
502....29988

26 CFR

301....28719
Proposed Rules:
301....30211

30 CFR

11....30398
49....30398
56....30398
57....30398
58....30398
70....30398
72....30398
75....30398
886....29756
Proposed Rules:
Ch. VII....29521
926....29521

31 CFR

0....28535

32 CFR

254....30188

33 CFR

100....29756, 29757
110....29758
117....29760
164....28834
165....29761, 29762, 30157
Proposed Rules:
117....29804

34 CFR

Proposed Rules:
700....30160

36 CFR

1236....29989
Proposed Rules:
13....29523, 29532

37 CFR

Proposed Rules:
1....30157

39 CFR

Proposed Rules:
265....29806

40 CFR

9....29954
52....28720, 28726, 28729, 29484, 29763, 30189
63....29484
70....30192
271....28539, 29992
Proposed Rules:
52....28557, 28772, 28773, 29809, 30217
70....29809, 30037
81....30046
180....30048
300....29814
455....30217
721....30050

41 CFR

Proposed Rules:
201–9....28560

42 CFR

84....30336
Proposed Rules:
412....29202
413....29202
424....29202
485....29202
489....29202

43 CFR

Public Land Order:
7143....28540
7144....28541
7145....28541
7146....28731
Proposed Rules:
11....28773
426....29532
427....29532

44 CFR

64....28732
65....29993, 29995
67....29997
Proposed Rules:
67....30052

45 CFR

1357....28735
Proposed Rules:
Ch. VII....30058

47 CFR

0....30002
43....29485
61....29488
64....29489
65....28542
73....29491
74....28546
Proposed Rules:
0....29535
32....30058
36....30059
61....28774
64....28774
73....29816, 29817
76....29533
80....28775, 29535

48 CFR

202....29491
203....29491
206....29491
207....29491
209....29491
215....29491
217....29491
219....29491
225....29491
226....29491
228....29491
231....29491
232....29491
235....29491
237....29491
242....29491
244....29491
245....29491
247....29491
249....29491
251....29491
252....29491
253....29491
915....30002
931....30002
933....28737
942....30002
951....30002
952....30002
970....28737, 30002
1831....29504
1852....29504
Proposed Rules:
9....30258

49 CFR

1....30195
571....30006, 30196
1023....30011
Proposed Rules:
571....28561

50 CFR

17....29914
227....28741
651....30157
672....29505, 30199, 30200
Proposed Rules:
17....29537
227....30263
285....28776
630....29543
649....29818
650....29818
651....29818

LIST OF PUBLIC LAWS

Note: No public bills which have become law were received by the Office of the Federal Register for inclusion in today's **List of Public Laws.**

Last List June 6, 1995