solicitation or express advocacy of a clearly identified candidate.

Certification of no Effect Pursuant to 5 U.S.C. 605(b) [Regulatory Flexibility Act]

The attached final regulations will not have a significant economic impact on a substantial number of small entities. The basis for this certification is that any affected entities are already required to comply with the Act's requirements in this area.

List of Subjects

11 CFR Part 110

Campaign Funds, Political Candidates, Political Committees and Parties.

For reasons set out in the preamble, Subchapter A, chapter I of Title 11 of the Code of Federal Regulations is amended as follows:

PART 110—CONTRIBUTION AND EXPENDITURE LIMITATIONS AND PROHIBITIONS

1. The authority citation for 11 CFR Part 110 continues to read as follows:

Authority: 2 U.S.C. 431(8), 431(9), 432(c)(2), 437d(a)(8), 438(a)(8), 441a, 441b, 441d, 441e, 441f, 441g, and 441h.

2. Part 110 is amended by revising paragraph (a) of section 110.11 to read as follows:

§ 110.11 Communications; advertising (2 U.S.C. 441d).

(a)(1) *General rules.* Except as provided at paragraph (a)(6) of this section, whenever any person makes an expenditure for the purpose of financing a communication that expressly advocates the election or defeat of a clearly identified candidate, or that solicits any contribution, through any broadcasting station, newspaper, magazine, outdoor advertising facility, poster, yard sign, direct mailing or any other form of general public political advertising, a disclaimer meeting the requirements of paragraphs (a)(1) (i), (ii), (iii), (iv) or (a)(2) of this section shall appear and be presented in a clear and conspicuous manner to give the reader, observer or listener adequate notice of the identity of persons who paid for and, where required, who authorized the communication.

(i) Such communication, including any solicitation, if paid for and authorized by a candidate, an authorized committee of a candidate, or its agent, shall clearly state that the communication has been paid for by the authorized political committee; or

(ii) Such communication, including any solicitation, if authorized by a candidate, an authorized committee of a candidate or an agent thereof, but paid for by any other person, shall clearly state that the communication is paid for by such other person and is authorized by such candidate, authorized committee or agent; or

(iii) Such communication, including any solicitation, if made on behalf of or in opposition to a candidate, but paid for by any other person and not authorized by a candidate, authorized committee of a candidate or its agent, shall clearly state that the communication has been paid for by such person and is not authorized by any candidate or candidate's committee.

(iv) For solicitations directed to the general public on behalf of a political committee which is not an authorized committee of a candidate, such solicitation shall clearly state the full name of the person who paid for the communication.

(2) *Coordinated Party Expenditures.*

(i) For a communication paid for by a party committee pursuant to 2 U.S.C. 441a(d), the disclaimer required by paragraph (a)(1) of this section shall identify the committee that makes the expenditure as the person who paid for the communication, regardless of whether the committee was acting in its own capacity or as the designated agent of another committee.

(ii) A communication made by a party committee pursuant to 2 U.S.C. 441a(d) prior to the date the party's candidate is nominated shall satisfy the requirements of this section if it clearly states who paid for the communication.

(3) *Definition of ''direct mailing.''* For purposes of paragraph (a)(1) of this section only, ''direct mailing'' includes any number of substantially similar pieces of mail but does not include a mailing of one hundred pieces or less by any person.

(4) *Exempt Activities.* For purposes of paragraph (a)(1) of this section only, the term ''expenditure'' includes a communication by a candidate or party committee that qualifies as an exempt activity under 11 CFR 100.8(b)(10), (16), (17), or (18). Such communications, unless excepted under paragraph (a)(6) of this section, shall clearly state who paid for the communication but do not have to include an authorization statement.

(5) *Placement of Disclaimer.* The disclaimers specified in paragraph (a)(1) of this section shall be presented in a clear and conspicuous manner, to give the reader, observer or listener adequate notice of the identity of the person or committee that paid for, and, where required, that authorized the communication. A disclaimer is not clear and conspicuous if the printing is difficult to read or if the placement is easily overlooked.

(i) The disclaimer need not appear on the front or cover page of the communication as long as it appears within the communication, except on communications, such as billboards, that contain only a front face.

(ii) Each communication that would require a disclaimer if distributed separately, that is included in a package of materials, must contain the required disclaimer.

(iii) Disclaimers in a televised communication shall be considered clear and conspicuous if they appear in letters equal to or greater than four (4) percent of the vertical picture height that air for not less than four (4) seconds.

(6) *Exceptions.* The requirements of paragraph (a)(1) of this section do not apply to:

(i) bumper stickers, pins, buttons, pens and similar small items upon which the disclaimer cannot be conveniently printed;

(ii) skywriting, watertowers, wearing apparel or other means of displaying an advertisement of such a nature that the inclusion of a disclaimer would be impracticable; or

(iii) checks, receipts and similar items of minimal value which do not contain a political message and which are used for purely administrative purposes.

(7) *Activities by separate segregated fund or its connected organization.* For purposes of paragraph (a)(1) of this section, whenever a separate segregated fund or its connected organization solicits contributions to the fund from those persons it may solicit under the applicable provisions of 11 CFR part 114, or makes a communication to those persons, such communication shall not be considered a form of general public political advertising and need not contain the disclaimer set forth in paragraph (a)(1) of this section.

* * * * *

Dated: October 2, 1995.

Danny Lee McDonald,

Chairman.

[FR Doc. 95–24749 Filed 10–4–95; 8:45 am]

BILLING CODE 6715–01–M

DEPARTMENT OF TRANSPORTATION

Federal Aviation Administration

14 CFR Part 39

[Docket No. 93–CE–61–AD; Amendment 39–9386; AD 95–20–07]

Airworthiness Directives; The New Piper Aircraft, Inc. (Formerly Piper Aircraft Corporation) PA24, PA28R, PA30, PA32R, PA34, and PA39 Series Airplanes

AGENCY: Federal Aviation Administration, DOT.

ACTION: Final rule.

SUMMARY: This amendment adopts a new airworthiness directive (AD) that applies to certain The New Piper Aircraft, Inc. (Piper) PA24, PA28R, PA30, PA32R, PA34, and PA39 series airplanes. This action requires repetitively inspecting the main gear side brace studs for cracks and replacing any cracked main gear side brace stud. Several reports of main gear side brace stud cracks on the affected airplanes, including seven incidents where the main landing gear (MLG) collapsed, prompted this action. The actions specified by this AD are intended to prevent a MLG collapse caused by main gear side brace stud cracks, which, if not detected and corrected, could result in loss of control of the airplane during landing operations.

EFFECTIVE DATE: November 17, 1995.

ADDRESSES: Information that applies to this AD may be examined at the Federal Aviation Administration (FAA), Central Region, Office of the Assistant Chief Counsel, Room 1558, 601 E. 12th Street, Kansas City, Missouri 64106.

FOR FURTHER INFORMATION CONTACT: Christina Marsh, Aerospace Engineer, FAA, Atlanta Aircraft Certification Office, Campus Building, 1701 Columbia Avenue, suite 2–160, College Park, Georgia 30337–2748; telephone (404) 305–7362; facsimile (404) 305–7348.

SUPPLEMENTARY INFORMATION: A proposal to amend part 39 of the Federal Aviation Regulations (14 CFR part 39) to include an AD that would apply to certain Piper PA24, PA28R, PA30, PA32R, PA32RT, PA34, PA39, and PA44 series airplanes was published in the Federal Register on February 22, 1995 (60 FR 9799). The action proposed to require repetitively inspecting (using dye penetrant or magnetic particle methods) the main gear side brace studs for cracks, and replacing any cracked main gear side brace stud.

Interested persons have been afforded an opportunity to participate in the making of this amendment. Due consideration has been given to the seven comments received from four different commenters.

Piper proposes that the AD require inspecting the Models PA32R–300, PA34–200, and PA34–200T airplanes equipped with the 9/16-inch stud and that the AD exempt the PA28R series airplanes from the repetitive inspections. Piper states that, based on its data regarding the service history of the affected airplanes, all failures and main gear side brace stud cracks occurred on airplanes equipped with the 9/16-inch stud. The proposal would require inspecting both the 5/8-inch diameter stud and the 9/16-inch stud. The FAA partially concurs. The PA28R series airplanes may have either the 9/16-inch stud or the 5/8-inch stud installed. All PA28RT series airplanes have 5/8-inch diameter studs installed at manufacture. Although no incidents regarding failures or cracks on main gear side brace studs involving Piper PA28R series airplanes have been received, the FAA has determined that PA28R series airplanes equipped with the 9/16-inch stud are of the same type design as the PA32R and PA34 series airplanes equipped with the 9/16-inch stud. Therefore, the AD will continue to affect the PA28R series airplanes with 9/16-inch studs installed. The FAA does concur that repetitive inspections of affected airplanes with a 5/8-inch main side gear stud brace assembly installed are not justified. The AD is changed to require repetitive inspections of the 9/16-inch main gear side brace studs on Piper PA28R, PA32R, and PA34 series airplanes with an option for terminating the inspections by installing a 5/8-inch main gear side brace stud bracket assembly. This AD does not apply to the PA32RT and PA44 series airplanes.

One commenter recommends that the FAA supply additional information in the AD to verify the part number (P/N) of the main gear side brace stud on the PA28, PA32R, and PA34 series airplanes. The FAA concurs that additional information would be helpful in identifying the main gear side brace stud P/N. A note has been added to the AD specifying that there is no way of determining the main gear side brace P/N without removing the stud from the bracket assembly and measuring the shank diameter of the stud. If the shank diameter is 9/16-inch, then the main gear side brace stud is either P/N 95299–00 or P/N 95299–02.

Another commenter questions the availability of replacement 9/16-inch main gear side brace studs for all the affected airplanes. The FAA contacted the manufacturer to verify that sufficient replacement parts are available. Replacement main gear side brace studs for cracked studs are available and shall be installed as follows:

—For the Models PA28R–180, PA28R–200, PA28R–201, PA28R–201T, PA32R–300, PA34–200, and PA34–200T airplanes, the 9/16-inch diameter studs, P/N 95299–00 and P/N 95299–02, are no longer available as replacement parts. A new bracket assembly (P/N 95643–06, P/N 95643–07, P/N 95643–08, or P/N 95643–09, as applicable) must be obtained from the manufacturer and incorporated if a cracked 9/16-inch main gear side brace stud is found on these airplanes. This assembly includes the 5/8-inch main gear side brace stud, and the incorporation of the entire bracket assembly eliminates the need for the repetitive inspections.

—For the Models PA24 and PA24–250 airplanes, main gear side brace stud P/N 20829–00 shall be installed.

—For the Models PA24–260, PA24–400, PA30, and PA39 airplanes, main gear side brace stud P/N 22512–00 shall be installed.

One commenter requests that the FAA include a figure that identifies the area requiring non-destructive inspection. The FAA has added Figure 1 to the AD to comply with this commenter's request.

A commenter recommends that the FAA provide more detail regarding the appropriate inspection method required by the AD. This commenter's concern stems from the allowance to perform either dye penetrant or magnetic particle inspections of the main gear side brace studs. The term ''dye penetrant'' by definition includes the full range of penetrant options from low sensitivity visible or color contrast penetrants to the various higher sensitivity fluorescent penetrants. The FAA concurs that the inspection method should be more detailed in the AD. The AD is revised to require the inspection of the main gear side brace stud using a Type I (fluorescent) penetrant method or using magnetic particle inspection methods. The FAA does not concur that the inspection should only be accomplished using magnetic particle methods, but maintains that the sensitivity of either method will detect main gear side brace stud cracks.

A commenter requests that the FAA clarify the term ''FAA-approved dye penetrant or magnetic particle inspection procedures.'' Information has been added to the AD that specifies that the FAA intends for the inspections to be accomplished at a facility that is

approved by the FAA to perform either dye penetrant or magnetic particle inspections.

One commenter agrees with the proposal, but feels that the FAA should express the compliance time in landings instead of hours time-in-service (TIS). The FAA does not concur. Airplane owners/operators are not required to log the number of landings for this type design airplane. A correlation between the number of landings and the number of flight hours for an airplane fleet is a portion of the information (when available) used by the FAA in establishing appropriate compliance times. The FAA has re-evaluated this information and considers hours TIS as the best method of establishing a compliance time for this AD. The AD is unchanged as a result of this comment.

No comments were received regarding the FAA's estimate of the cost impact upon U.S. operators of the affected airplanes. The FAA did, however, miscalculate the number of airplanes that would be affected by the proposal. Upon further examination, the FAA has determined that 13,200 airplanes will be affected by this AD. No airplane models or serial numbers have been added to the Applicability section of the AD; therefore, this economic information change will not add any additional burden upon U.S. owners/operators of the affected airplanes over that which was already proposed.

In addition to the comments received, the FAA re-evaluated the proposed compliance time and decided that the initial inspection compliance time should be adjusted to account for those operators who already accomplished the inspection. The initial inspection compliance time has been rewritten to give credit to those operators already accomplishing the inspection at least once.

In addition, the FAA has included an inspection to detect an unapproved alteration of the main gear side brace bracket assembly. The FAA received documentation of several mechanics taking the 9⁄16-inch stud bracket assembly and modifying it to accommodate the 5⁄8-inch stud. The unapproved alteration is easy to detect because of the number of installed bushings. The 9⁄16-inch main gear side brace stud bracket assembly contains two bushings and the 5⁄8-inch main gear side brace stud bracket assembly contains one bushing. The FAA has included a note in the AD to specify that the ''PA34–200T Illustrated Parts Catalog (Revision dated May 1983, Piper P/N 761 589), Figure 45, Item 52, illustrates this one and two-bushing installation.''

After careful review of all available information related to the subject presented above, the FAA has determined that air safety and the public interest require the adoption of the rule as proposed except for the compliance change, the economic information correction, the addition of the inspection for unapproved main gear side brace stud bracket assemblies, minor editorial corrections, and the changes referenced above pertaining to the comments received as a result of the notice of proposed rulemaking. The FAA has determined that the addition, changes, and minor corrections will not change the meaning of the AD and will not add any additional burden upon the public than was already proposed.

The FAA estimates that 13,200 airplanes in the U.S. registry will be affected by this AD, that it will take approximately 5 workhours per airplane to initially inspect both the right and left main landing gear side brace studs, and that the average labor rate is approximately $60 an hour. Based on these figures, the total cost impact of the AD on U.S. operators is estimated to be $3,960,000. This figure represents the cost of the initial inspection, and does not reflect costs for repetitive inspections or possible replacements. The FAA has no way of determining how many main gear side brace studs may need replacement or how many repetitive inspections each owner/operator may incur.

The regulations adopted herein will not have substantial direct effects on the States, on the relationship between the national government and the States, or on the distribution of power and responsibilities among the various levels of government. Therefore, in accordance with Executive Order 12612, it is determined that this final rule does not have sufficient federalism implications to warrant the preparation of a Federalism Assessment.

For the reasons discussed above, I certify that this action (1) is not a ''significant regulatory action'' under Executive Order 12866; (2) is not a ''significant rule'' under DOT Regulatory Policies and Procedures (44 FR 11034, February 26, 1979); and (3) will not have a significant economic impact, positive or negative, on a substantial number of small entities under the criteria of the Regulatory Flexibility Act. A copy of the final evaluation prepared for this action is contained in the Rules Docket. A copy of it may be obtained by contacting the Rules Docket at the location provided under the caption **ADDRESSES.**

List of Subjects in 14 CFR Part 39

Air transportation, Aircraft, Aviation safety, Safety.

Adoption of the Amendment

Accordingly, pursuant to the authority delegated to me by the Administrator, the Federal Aviation Administration amends part 39 of the Federal Aviation Regulations (14 CFR part 39) as follows:

PART 39—AIRWORTHINESS DIRECTIVES

1. The authority citation for part 39 continues to read as follows:

Authority: 49 USC 106(g), 40101, 40113, 44701.

§ 39.13 [Amended]

2. Section 39.13 is amended by adding a new airworthiness directive (AD) to read as follows:

95–20–07 The New Piper Aircraft, Inc. (formerly Piper Aircraft Corporation): Amendment 39–9386; Docket No. 93–CE–61–AD.

Applicability: The following airplane models and serial numbers, certificated in any category:

1. All serial numbers of Models PA24, PA24–250, PA24–260, PA24–400, PA30, and PA39 airplanes;

2. The following model and serial number airplanes that are not equipped with a part number (P/N) 95643–06, 95643–07, 95643–08, or 95643–09 bracket assembly, which includes a part number 78717–02 main landing gear side brace stud:

Model	Serial numbers
PA28R–180.	28R–30002 through 28R–31135, and 28R–7130001 through 28R–7130013.
PA28R–200.	28R–35001 through 28R–35820, and 28R–7135001 through 28R–7635539.
PA28R–201.	28R–7737002 through 28R–7737096.
PA28R–201T.	28R–7703001 through 28R–7703239.
PA32R–300.	32R–7680001 through 32R–7780444.
PA34–200.	All serial numbers.
PA34–200T.	34–7570001 through 34–7770372.

Note 1: This AD applies to each airplane identified in the preceding applicability revision, regardless of whether it has been modified, altered, or repaired in the area subject to the requirements of this AD. For airplanes that have been modified, altered, or repaired so that the performance of the requirements of this AD is affected, the owner/operator must request approval for an alternative method of compliance in accordance with paragraph (e) of this AD. The request should include an assessment of the effect of the modification, alteration, or

repair on the unsafe condition addressed by this AD; and, if the unsafe condition has not been eliminated, the request should include specific proposed actions to address it.

Compliance: Required initially as follows, and thereafter as specified in the body of this AD:

1. For the affected Models PA28R–180, PA28R–200, PA28R–201, PA28R–201T, PA32R–300, PA34–200, and PA34–200T airplanes: Within the next 100 hours time-in-service (TIS) after the effective date of this AD or, if the main gear side brace stud has already been inspected as specified in this AD, within 500 hours TIS after the last inspection, whichever occurs later.

2. For the affected Models PA24, PA24–250, PA24–260, PA24–400, PA30, and PA39 airplanes: Within the next 100 hours time-in-service (TIS) after the effective date of this AD or, if the main gear side brace stud has already been inspected as specified in this AD, within 1,000 hours TIS after the last inspection, whichever occurs later.

To prevent main landing gear (MLG) collapse caused by main gear side brace stud cracks, which, if not detected and corrected, could result in loss of control of the airplane during landing operations, accomplish the following:

Note 2: The paragraph structure of this AD is as follows:

Level 1: (a), (b), (c), etc.
Level 2: (1), (2), (3), etc.
Level 3: (i), (ii), (iii), etc.

Level 2 and Level 3 structures are designations of the Level 1 paragraph they immediately follow.

(a) Remove both the left and right main gear side brace studs from the airplane in accordance with the instructions contained in the Landing Gear section of the maintenance manual, and inspect each main gear side brace stud for cracks, using Type I (fluorescent) liquid penetrant or magnetic particle inspection methods. Inspections must be accomplished by a facility approved by the FAA to accomplish the applicable inspection method. Figure 1 of this AD depicts the area where the sidebrace stud is to be inspected.

BILLING CODE 4910–13–P

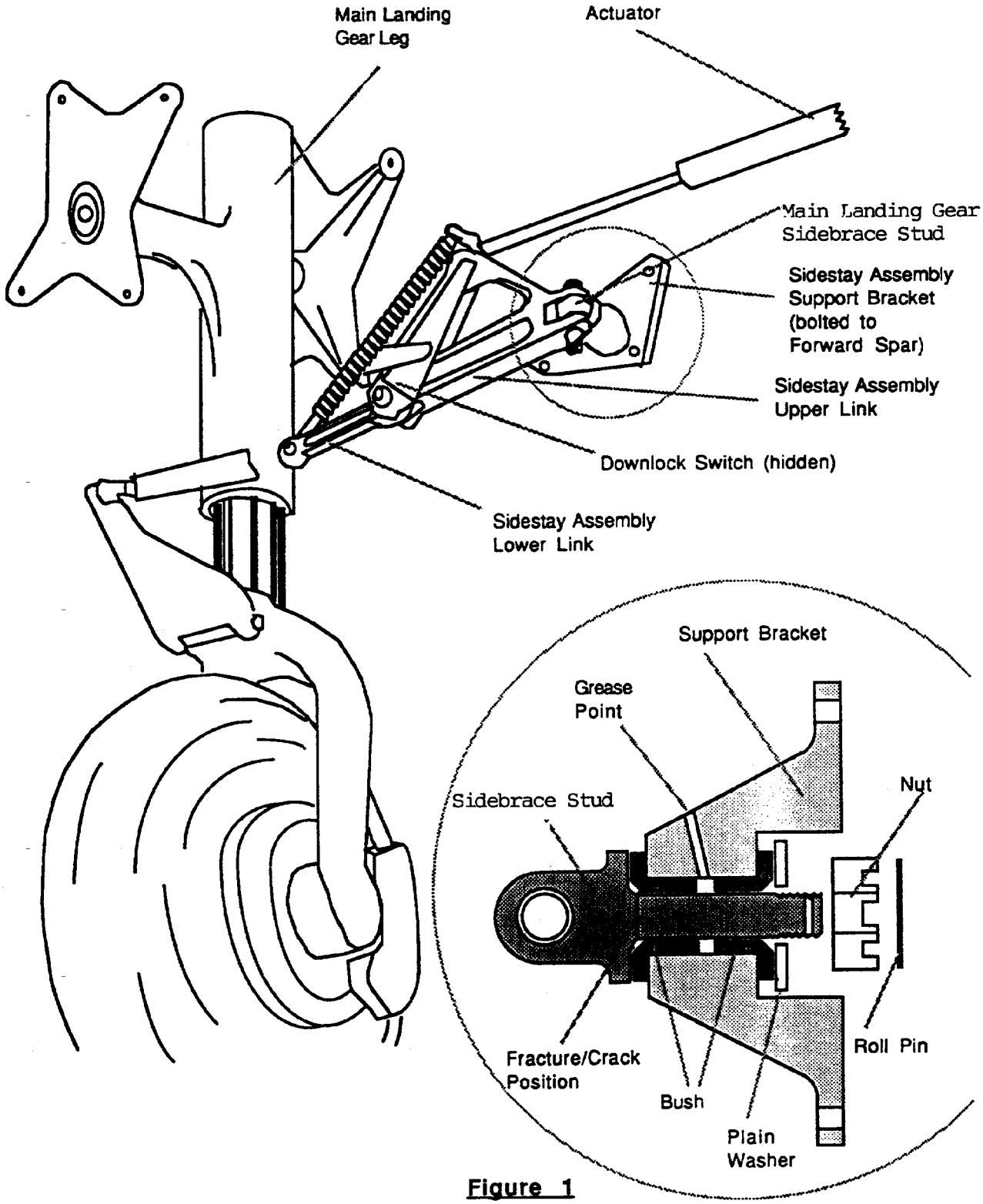

Figure 1

Note: This figure is provided to depict the area of the sidebrace stud to be inspected. This is not intended to represent the configuration of all models affected.

BILLING CODE 4910–13–C

Note 3: All affected Models PA24 and PA24–250 airplanes were equipped at manufacture with P/N 20829–00 main gear side brace studs. All affected Models PA24–260, PA24–400, PA30, and PA39 airplanes were equipped at manufacture with P/N 22512–00 main gear side brace studs. A P/N 95299–00 or P/N 95299–02 stud installed in an applicable Model PA28R–180, PA28R–200, PA28R–201, PA28R–201T, PA32R–300, PA34–200, or PA34–200T airplane may be identified by removing the stud and measuring the shank diameter of the stud. If the shank measures ⅝-inch in diameter, a P/N 78717–02 main gear side brace stud is installed. The FAA is aware of no methods of determining the main gear side brace stud P/N while the stud is installed.

(1) For any main gear side brace stud found cracked, prior to further flight, replace the cracked stud with an FAA-approved serviceable part (part numbers referenced in the table in paragraph (c) of this AD) in accordance with the instructions contained in the Landing Gear section of the applicable maintenance manual, and accomplish one of the following, as applicable:

(i) Reinspect and replace (as necessary) as specified in paragraph (c) of this AD; or

(ii) For the affected Models PA28R–180, PA28R–200, PA28R–201, PA28R–201T, PA32R–300, PA34–200, and PA34–200T airplanes, the P/N 95299–00 or 95299–02 main gear side brace studs are no longer manufactured. A new main gear side brace stud bracket assembly, P/N 95643–06, P/N 95643–07, P/N 95643–08, or P/N 95643–09, as applicable, must be installed if cracks are found as specified in paragraph (a)(1) of this AD. No repetitive inspections will be required by this AD for these affected airplane models when this bracket assembly is installed.

(2) For the affected Models PA28R–180, PA28R–200, PA28R–201, PA28R–201T, PA32R–300, PA34–200, and PA34–200T airplanes, inspect the main gear side brace assembly to ensure that the appropriate number of bushings are installed:

(i) For the 9⁄16-inch main gear side brace stud, P/N 95299–00 or P/N 95299–02, two bushings must be installed in the bracket assembly.

(ii) For the ⅝-inch main gear side brace stud, P/N 78717–02, one bushing must be installed in the bracket assembly.

(iii) Prior to further flight, replace any bracket assembly where the inappropriate number of bushings are installed.

Note 4: The PA34–200T Illustrated Parts Catalog (Revision dated May 1983, Piper P/N 761 589), Figure 45, Item 52, illustrates this one and two-bushing installation.

(3) For any main gear side brace stud not found cracked, prior to further flight, reinstall the uncracked stud in accordance with the instructions contained in the Landing Gear section of the applicable maintenance manual, and reinspect and replace (as necessary) as specified in paragraph (c) of this AD.

(b) Owners/operators of the affected Models PA28R–180, PA28R–200, PA28R–201, PA28R–201T, PA32R–300, PA34–200, and PA34–200T airplanes may have a new main gear side brace bracket assembly, P/N 95643–06, P/N 95643–07, P/N 95643–08, or P/N 95643–09, as applicable, installed at any time to terminate the inspection requirement of this AD.

(c) Reinspect both the left and right main gear side brace studs, using Type I (fluorescent) liquid penetrant or magnetic particle inspection methods. Inspections must be accomplished by a facility approved by the FAA to accomplish the applicable inspection method. Replace any cracked stud or reinstall any uncracked stud as specified in paragraphs (a)(1) and (a)(3) of this AD, respectively:

Part No. installed	TIS inspection interval	Model airplanes installed on
20829–00	1,000 hours	PA24 and PA24–250.
22512–00	1,000 hours	PA24–260, PA24–400, PA30, and PA39.
95299–00 or 95299–02.	500 hours	PA28R–180, PA28R–200, PA28R–201, PA28R–201T, PA32R–300, PA34–200, and PA34–200T.

Note 5: Accomplishing the actions of this AD does not affect the requirements of AD 77–13–21, Amendment 39–3093. The tolerance inspection requirements of that AD still apply for Piper PA24, PA30, and PA39 series airplanes.

(d) Special flight permits may be issued in accordance with sections 21.197 and 21.199 of the Federal Aviation Regulations (14 CFR 21.197 and 21.199) to operate the airplane to a location where the requirements of this AD can be accomplished.

(e) An alternative method of compliance or adjustment of the initial or repetitive compliance times that provides an equivalent level of safety may be approved by the Manager, Atlanta Aircraft Certification Office (ACO), Campus Building, 1701 Columbia Avenue, Suite 2–160, College Park, Georgia 30337–2748. The request shall be forwarded through an appropriate FAA Maintenance Inspector, who may add comments and then send it to the Manager, Atlanta ACO.

Note 6: Information concerning the existence of approved alternative methods of compliance with this AD, if any, may be obtained from the Atlanta ACO.

(f) Information related to this AD may be inspected at the FAA, Central Region, Office of the Assistant Chief Counsel, Room 1558, 601 E. 12th Street, Kansas City, Missouri.

(g) This amendment (39–9386) becomes effective on November 17, 1995.

Issued in Kansas City, Missouri, on September 28, 1995.

John R. Colomy,

Acting Manager, Small Airplane Directorate, Aircraft Certification Service.

[FR Doc. 95–24713 Filed 10–4–95; 8:45 am]

BILLING CODE 4910–13–P

DEPARTMENT OF THE TREASURY

Internal Revenue Service

26 CFR Part 1

[T.D. 8606]

RIN 1545–AR23

Definition of Qualified Electric Vehicle, and Recapture Rules for Qualified Electric Vehicles, Qualified Clean-fuel Vehicle Property, and Qualified Clean-fuel Vehicle Refueling Property; Correction

AGENCY: Internal Revenue Service, Treasury.

ACTION: Correction to final regulations.

SUMMARY: This document contains a correction to final regulations, Treasury Decision 8606, which was published in the Federal Register on Thursday, August 3, 1995 (60 FR 39649). The final regulations are on the definition of a qualified electric vehicle, the recapture of any credit allowable for a qualified electric vehicle, and the recapture of any deduction allowable for qualified clean-fuel vehicle refueling property.

EFFECTIVE DATE: August 3, 1995.

FOR FURTHER INFORMATION CONTACT: Joanne E. Johnson at (202) 622–3110 (not a toll-free number).

SUPPLEMENTARY INFORMATION:

Background

The final regulations that are the subject of this correction are under sections 30 and 179A of the Internal Revenue Code.

Need for Correction

As published, T.D. 8606 contains an error which may prove to be misleading and is in need of clarification.

Correction of Publication

Accordingly, the publication of the final regulation (T.D. 8606), which was the subject of FR Doc. 95–19028, is corrected as follows:

On page 39649, column 1, in the heading, the language ''RIN 1545–AR64'' is corrected to read ''RIN 1545–AR23''.

Cynthia E. Grigsby,

Chief, Regulations Unit, Assistant Chief Counsel (Corporate).

[FR Doc. 95–24781 Filed 10–4–95; 8:45 am]

BILLING CODE 4830–01–P