member institutions, by virtue of their limited asset size, would be incapable of increasing or unwilling to increase their borrowings (due to the increased cost of borrowing resulting from investing in additional Bank stock) just to receive ''preferred treatment'' under an AHP subsidy limits policy.

Another possible reason for limiting access to AHP subsidies based on a member's level of mortgage-related assets may be to encourage members to do more home financing, consistent with the provisions of the Bank Act that impose less burdensome advances and stock requirements on institutions that devote a greater percentage of their assets to housing finance (qualified thrift lenders). *See id.* sec. 1430(e)(1), (2); 12 CFR 935.13. However, such a limit may defeat this goal since members with lower levels of mortgage-related assets would have limited access to AHP subsidies which they could use for such housing finance purposes.

IV. Regulatory Flexibility Act

The proposed rule applies only to the Banks, which do not come within the meaning of ''small entities,'' as defined in the Regulatory Flexibility Act. *See* 5 U.S.C. 601(6). Therefore, in accordance with 5 U.S.C. 605(b), the Board hereby certifies that this proposed rule, if promulgated as a final rule, will not have a significant economic impact on a substantial number of small entities.

List of Subjects for 12 CFR Part 960

Banks, banking, Credit, Federal home loan banks, Housing.

Accordingly, part 960 of title 12 of its Code of Federal Regulations is hereby proposed to be amended as follows:

SUBCHAPTER E—AFFORDABLE HOUSING

PART 960—AFFORDABLE HOUSING PROGRAM

1. The authority citation for part 960 continues to read as follows:

Authority: 12 U.S.C. 1422a, 1422b, 1430(j).

2. Paragraph (b) of § 960.4 is revised to read as follows:

960.4 Applications for funding.

* * * * *

(b)(1) Each Bank shall notify its members of the approximate amount of annual program funds available for the District, the approximate amount to be offered in each funding period, and the applicability of any subsidy limits or other application requirements established pursuant to this paragraph (b). The amount of funds made available in each offering should be comparable.

(2) A Bank, after consultation with its Advisory Council, may limit the maximum dollar amount of subsidy, or the maximum percentage of total available subsidy, that may be requested in a given funding period in the following ways:

(i) A uniform limit per member;

(ii) A limit per project application, including limits varying according to project size;

(iii) A limit per project unit; or

(iv) A limit on the amount of direct subsidy per project application.

(3) A Bank, after consultation with its Advisory Council, may establish any other subsidy limit or substantive application requirement not specifically provided for in this paragraph (b) or § 960.5(a)(2), only if such subsidy limit or substantive application requirement has received the prior approval of the Board.

(4) Any subsidy limit or application requirement established by a Bank pursuant to this paragraph (b) must apply equally to all members.

* * * * *

Dated: October 25, 1995.

By the Federal Housing Finance Board.

Bruce A. Morrison,

Chairman.

[FR Doc. 95–27023 Filed 10–31–95; 8:45 am]

BILLING CODE 6725–01–U

DEPARTMENT OF TRANSPORTATION

Federal Aviation Administration

14 CFR Part 23

[Docket No. 27316 Notice No. 93–5]

RIN 2120–AE86

Accelerated Stalls in Commuter Category Airplanes

AGENCY: Federal Aviation Administration, DOT.

ACTION: Notice of Proposed Rulemaking (NPRM); Withdrawal.

SUMMARY: The FAA is withdrawing a previously published Notice of Proposed Rulemaking (NPRM) that proposed to eliminate the certification requirement to demonstrate an accelerated entry stall for commuter category airplanes. The proposed rule would have removed an unwarranted hazard during flight demonstrations required for airplane type certification, and would not compromise passenger safety. This hazard was a direct result of the high power-to-weight rations of new commuter airplanes. The FAA has proposed a similar requirement in the Airworthiness Standards; Flight Proposals Based on European Joint Aviation Requirements, Docket No. 27807, Notice No. 94–22 (59 FR 37878), published July 25, 1994.

FOR FURTHER INFORMATION CONTACT: Lowell Foster, Standards Office (ACE–111), Small Airplane Directorate, Aircraft Certification Service, Federal Aviation Administration, 601 East 12th Street, Kansas City, Missouri 64106; telephone (816) 426–5688.

SUPPLEMENTARY INFORMATION: On June 7, 1993, the FAA published Notice of Proposed Rulemaking No. 93–5 (58 FR 32034), Docket No. 27316, to announce its intention to amend 14 CFR part 23. Concurrent with publication of that notice, the FAA published notice of availability of a proposed change to AC 23–8A.

The FAA proposed a similar requirement in Notice No. 94–22 (59 FR 37878; July 25, 1994), Docket No. 27807, which covers the accelerated stall demonstration and would harmonize it with the Joint Aviation Requirements. The proposed requirement, based on the European rules, provides relief from high power settings for the accelerated stall demonstration, removing the condition that created the hazard that was the subject of the petition for rulemaking. Therefore the FAA considers that Notice No. 94–22 addresses the petitioner's original concerns for hazardous flight demonstrations, even though it is not identical to the original rule change proposed by the petitioner. Accordingly, the Accelerated Stalls Notice of Proposed Rulemaking and the draft advisory circular, published in the Federal Register on June 7, 1993 (58 FR 32034), are withdrawn.

Comments submitted to Docket No. 27316 are being reviewed, and will be disposed of as part of Docket No. 27807.

Issued in Washington, DC on October 25, 1995.

Daniel P. Salvano,

Acting Director, Aircraft Certification Service.

[FR Doc. 95–26993 Filed 10–31–95; 8:45 am]

BILLING CODE 4910–13–M

---

14 CFR Part 39

[Docket No. 95–SW–04–AD]

Airworthiness Directives; Societe Nationale Industrielle Aerospatiale and Eurocopter France Model AS 350B, BA, B1, B2, and D, and Model AS 355E, F, F1, F2, and N Helicopters

AGENCY: Federal Aviation Administration, DOT.

ACTION: Notice of proposed rulemaking (NPRM).

SUMMARY: This document proposes the adoption of a new airworthiness directive (AD) that is applicable to Societe Nationale Industrielle Aerospatiale and Eurocopter France (Eurocopter France) Model AS 350B, BA, B1, B2, and D and Model AS 355E, F, F1, F2, and N helicopters, without an autopilot installed. This proposal would require a visual inspection to determine whether the cyclic pitch change control rod (rod) end fittings were safetied, and removal and replacement of the rod if the rod end fittings were not safetied. This proposal is prompted by a manufacturer's report that some of the rod end fittings had not been safetied at the factory. The actions specified by the proposed AD are intended to prevent loss of tightening torque on the adjustment nuts of the rod, shifting of the neutral point of the cyclic stick, reduction in the amount of available movement of the cyclic stick in the roll axis, and subsequent reduction in the controllability of the helicopter.

DATES: Comments must be received by January 2, 1996.

ADDRESSES: Submit comments in triplicate to the Federal Aviation Administration (FAA), Office of the Assistant Chief Counsel, Attention: Rules Docket No. 95–SW–04–AD, 2601 Meacham Blvd., Room 663, Fort Worth, Texas 76137. Comments may be inspected at this location between 9:00 a.m. and 3:00 p.m., Monday through Friday, except Federal holidays.

FOR FURTHER INFORMATION CONTACT: Mr. Richard Monschke, Aerospace Engineer, FAA, Rotorcraft Directorate, Rotorcraft Standards Staff, 2601 Meacham Blvd., Fort Worth, Texas 76137, telephone (817) 222–5116, fax (817) 222–5961.

SUPPLEMENTARY INFORMATION:

Comments Invited

Interested persons are invited to participate in the making of the proposed rule by submitting such written data, views, or arguments as they may desire. Communications should identify the Rules Docket number and be submitted in triplicate to the address specified above. All communications received on or before the closing date for comments, specified above, will be considered before taking action on the proposed rule. The proposals contained in this notice may be changed in light of the comments received.

Comments are specifically invited on the overall regulatory, economic, environmental, and energy aspects of the proposed rule. All comments submitted will be available, both before and after the closing date for comments, in the Rules Docket for examination by interested persons. A report summarizing each FAA-public contact concerned with the substance of this proposal will be filed in the Rules Docket.

Commenters wishing the FAA to acknowledge receipt of their comments submitted in response to this notice must submit a self-addressed, stamped postcard on which the following statement is made: ''Comments to Docket No. 95–SW–04–AD.'' The postcard will be date stamped and returned to the commenter.

Availability of NPRMs

Any person may obtain a copy of this NPRM by submitting a request to the FAA, Office of the Assistant Chief Counsel, Attention: Rules Docket No. 95–SW–04–AD, 2601 Meacham Blvd., Room 663, Fort Worth, Texas 76137.

Discussion

The Direction Generale De L'Aviation Civile (DGAC), which is the airworthiness authority for France, has notified the FAA that an unsafe condition may exist on Eurocopter France Model AS 350B, BA, B1, B2, and D and Model AS 355E, F, F1, F2, and N helicopters, without an autopilot installed. The DGAC advises that the manufacturer discovered that some rod end fittings have not been safetied at the factory.

Eurocopter France has issued Eurocopter Service Bulletin No. 01.38, dated June 26, 1994, for the Model AS 355 series helicopters, and Eurocopter Service Bulletin No. 01.42, dated June 28, 1994, for the Model AS 350 series helicopters, which specifies a visual inspection to determine whether the rod end fittings have been safetied; reinstallation of the forward lower fairing if the rod end fittings have been safetied, and removal and replacement of the rod with an airworthy rod and reinstallation of the forward lower fairing if the rod end fittings have not been safetied. The DGAC classified this service bulletin as mandatory and issued AD 94–179–051(B) and AD 94–180–069(B), both dated August 3, 1994, in order to assure the continued airworthiness of these helicopters in France.

This helicopter model is manufactured in France and is type certificated for operation in the United States under the provisions of section 21.29 of the Federal Aviation Regulations (14 CFR 21.29) and the applicable bilateral airworthiness agreement. Pursuant to this bilateral airworthiness agreement, the DGAC has kept the FAA informed of the situation described above. The FAA has examined the findings of the DGAC, reviewed all available information, and determined that AD action is necessary for products of this type design that are certificated for operation in the United States.

Since an unsafe condition has been identified that is likely to exist or develop on other Eurocopter France Model AS 350B, BA, B1, B2, and D and Model AS 355E, F, F1, F2, and N helicopters without an autopilot installed, of the same type design registered in the United States, the proposed AD would require a visual inspection to confirm that the rod end fittings are safetied in accordance with the manufacturer's service information, and removal and replacement of the rod, if necessary.

The FAA estimates that 498 helicopters of U.S. registry would be affected by this proposed AD, that it would take approximately one-fourth of a work hour per helicopter to inspect the rod end fittings, and 1 work hour to remove and reinstall the rod, if necessary, and that the average labor rate is $60 per work hour. Required parts would be provided by the manufacturer. Based on these figures, the total cost impact of the proposed AD on U.S. operators is estimated to be $37,350.

The regulations proposed herein would not have substantial direct effects on the States, on the relationship between the national government and the States, or on the distribution of power and responsibilities among the various levels of government. Therefore, in accordance with Executive Order 12612, it is determined that this proposal would not have sufficient federalism implications to warrant the preparation of a Federalism Assessment.

For the reasons discussed above, I certify that this proposed regulation (1) is not a ''significant regulatory action'' under Executive Order 12866; (2) is not a ''significant rule'' under the DOT Regulatory Policies and Procedures (44 FR 11034, February 26, 1979); and (3) if promulgated, will not have a significant economic impact, positive or negative, on a substantial number of small entities under the criteria of the Regulatory Flexibility Act. A copy of the draft regulatory evaluation prepared for this action is contained in the Rules Docket. A copy of it may be obtained by contacting the Rules Docket at the location provided under the caption **ADDRESSES.**

List of Subjects in 14 CFR Part 39

Air transportation, Aircraft, Aviation safety, Safety.

The Proposed Amendment

Accordingly, pursuant to the authority delegated to me by the Administrator, the Federal Aviation Administration proposes to amend part 39 of the Federal Aviation Regulations (14 CFR part 39) as follows:

PART 39—AIRWORTHINESS DIRECTIVES

1. The authority citation for part 39 continues to read as follows:

Authority: 49 U.S.C. 106(g), 40101, 40113, 44701.

§ 39.13 [Amended]

2. Section 39.13 is amended by adding a new airworthiness directive to read as follows:

Societe Nationale Industrielle Aerospatiale and Eurocopter France: Docket No. 95–SW–04–AD.

Applicability: Model AS 350B, BA, B1, B2, and D, and Model AS 355E, F, F1, F2, and N helicopters, with cyclic pitch change control rod, part number (P/N) 704A34–113–279, installed, and without an autopilot installed, certificated in any category.

Note 1: This AD applies to each helicopter identified in the preceding applicability provision, regardless of whether it has been modified, altered, or repaired in the area subject to the requirements of this AD. For helicopters that have been modified, altered, or repaired so that the performance of the requirements of this AD is affected, the owner/operator must use the authority provided in paragraph (d) to request approval from the FAA. This approval may address either no action, if the current configuration eliminates the unsafe condition, or different actions necessary to address the unsafe condition described in this AD. Such a request should include an assessment of the effect of the changed configuration on the unsafe condition addressed by this AD. In no case does the presence of any modification, alteration, or repair remove any helicopter from the applicability of this AD.

Compliance: Required as indicated, unless accomplished previously.

To prevent loss of tightening torque on the adjustment nuts of the cyclic pitch change control rod, shifting of the neutral position of the cyclic stick, reduction in the amount of available movement of the cyclic stick in the roll axis, and subsequent reduction in the controllability of the helicopter, accomplish the following:

(a) Within 100 hours time-in-service (TIS) after the effective date of this AD, remove the forward lower fairing and visually inspect the cyclic pitch change control rod (rod), P/N 704A34–113–279, to determine whether the end fittings have been safetied (see Figure 1, Detail 1, tabs bent around the adjustment nut).

(b) If the visual inspection indicates that the rod end fittings have been safetied, reinstall the forward lower fairing.

(c) If the visual inspection indicates that the rod end fittings have not been safetied (see Figure 1, Detail 2, tabs not bent around the adjustment nut), accomplish the following in accordance with the applicable maintenance manual:

(1) Immobilize the cyclic control.

BILLING CODE 4910–13–U

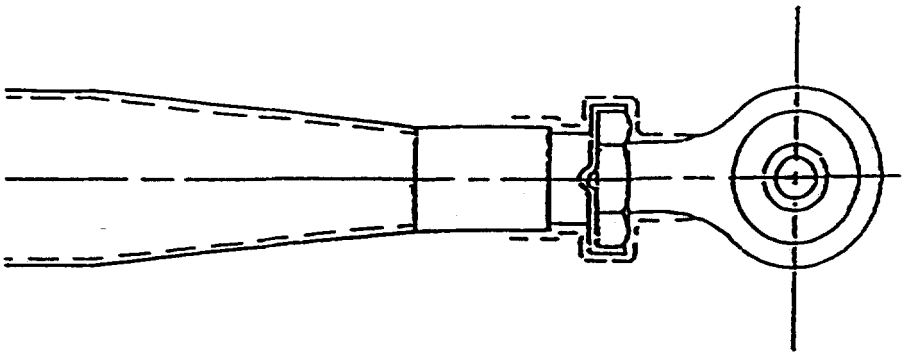

DETAIL 1

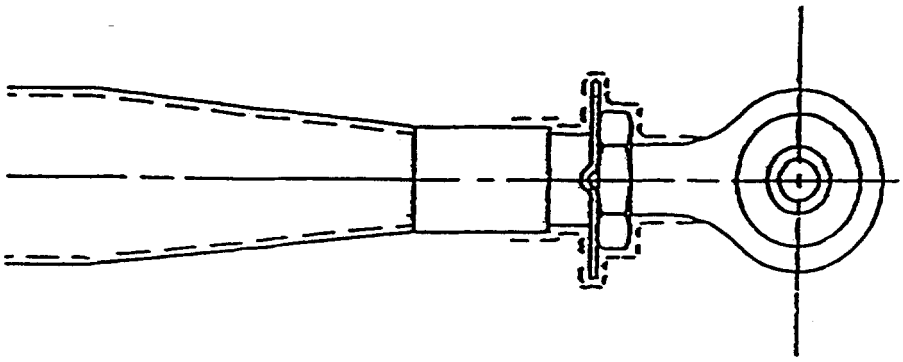

DETAIL 2

Figure 1

BILLING CODE 4910–13–C

(2) Remove the rod and replace it with an airworthy rod on which the rod end fittings have been safetied.

(3) Reinstall the forward lower fairing.

(4) Verify proper operation of the cyclic control.

(d) An alternative method of compliance or adjustment of the compliance time that provides an acceptable level of safety may be used when approved by the Manager, Rotorcraft Standards Staff, FAA, Rotorcraft Directorate. Operators shall submit their requests through an FAA Principal Maintenance Inspector, who may concur or comment and then send it to the Manager, Rotorcraft Standards Staff.

Note 2: Information concerning the existence of approved alternative methods of compliance with this AD, if any, may be obtained from the Rotorcraft Standards Staff.

(e) Special flight permits may be issued in accordance with sections 21.197 and 21.199 of the Federal Aviation Regulations (14 CFR 21.197 and 21.199) to operate the helicopter to a location where the requirements of this AD can be accomplished.

Issued in Fort Worth, Texas, on October 23, 1995.

Eric Bries,

Acting Manager, Rotorcraft Directorate, Aircraft Certification Service.

[FR Doc. 95–26999 Filed 10–31–95; 8:45 am]

BILLING CODE 4910–13–U

---

14 CFR Part 39

[Docket No. 95–SW–26–AD]

Airworthiness Directives; Bell Helicopter Textron, Inc. Model 214ST Helicopters

AGENCY: Federal Aviation Administration, DOT.

ACTION: Notice of proposed rulemaking (NPRM).

SUMMARY: This document proposes the adoption of a new airworthiness directive (AD) that is applicable to Bell Helicopter Textron, Inc. (BHTI) Model 214ST helicopters with certain tailboom assemblies and a certain emergency float kit installed. This proposal would require initial and repetitive inspections of the tailboom for cracks until modifications of the tailboom are accomplished. This proposal is prompted by several reports of cracks in the lower aft skin of the tailboom assembly. The actions specified by the proposed AD are intended to prevent cracks in the tailboom assembly, which could result in structural failure of the tailboom and subsequent loss of control of the helicopter.

DATES: Comments must be received by January 2, 1996.

ADDRESSES: Submit comments in triplicate to the Federal Aviation Administration (FAA), Office of the Assistant Chief Counsel, Attention: Rules Docket No. 95–SW–26–AD, 2601 Meacham Blvd., Room 663, Fort Worth, Texas 76137. Comments may be inspected at this location between 9:00 a.m. and 3:00 p.m., Monday through Friday, except Federal holidays.

The service information referenced in the proposed rule may be obtained from Bell Helicopter Textron, Inc., Attention: Customer Support, P.O. Box 482, Fort Worth, Texas 76101. This information may be examined at the FAA, Office of the Assistant Chief Counsel, 2601 Meacham Blvd., Room 663, Fort Worth, Texas.

FOR FURTHER INFORMATION CONTACT: Mr. Tom Henry, Aerospace Engineer, FAA, Rotorcraft Directorate, Rotorcraft Certification Office, 2601 Meacham Blvd., Fort Worth, Texas 76137, telephone (817) 222–5158, fax (817) 222–5959.

SUPPLEMENTARY INFORMATION:

Comments Invited

Interested persons are invited to participate in the making of the proposed rule by submitting such written data, views, or arguments as they may desire. Communications should identify the Rules Docket number and be submitted in triplicate to the address specified above. All communications received on or before the closing date for comments, specified above, will be considered before taking action on the proposed rule. The proposals contained in this notice may be changed in light of the comments received.

Comments are specifically invited on the overall regulatory, economic, environmental, and energy aspects of the proposed rule. All comments submitted will be available, both before and after the closing date for comments, in the Rules Docket for examination by interested persons. A report summarizing each FAA-public contact concerned with the substance of this proposal will be filed in the Rules Docket.

Commenters wishing the FAA to acknowledge receipt of their comments submitted in response to this notice must submit a self addressed, stamped postcard on which the following statement is made: ''Comments to Docket No. 95–SW–26–AD.'' The postcard will be date stamped and returned to the commenter.

Availability of NPRMs

Any person may obtain a copy of this NPRM by submitting a request to the FAA, Office of the Assistant Chief Counsel, Attention: Rules Docket No. 95–SW–26–AD, 2601 Meacham Blvd., Room 663, Fort Worth, Texas 76137.

Discussion

This document proposes to adopt a new AD that is applicable to BHTI Model 214ST helicopters, serial number (S/N) 28101 through 28132, with a tailboom assembly, part number (P/N) 214–031–003–111 or 214–031–003–277, and with an emergency float kit, P/N 214–706–120, installed. There have been reports of cracks found in five Model 214ST helicopter tailbooms with the emergency float kit installed. The cracks were found in the lower aft skin between boom stations 243.76 and 284.38. This condition, if not corrected, could result in structural failure of the tailboom and subsequent loss of control of the aircraft.

The FAA has reviewed Bell Helicopter Textron, Inc. Alert Service Bulletin 214ST–95–72 (ASB), dated July 24, 1995, which describes procedures for a visual inspection of the affected tailboom area of Model 214ST helicopters with emergency float kits installed. The ASB also describes a modification to the helicopters that adds internal stiffeners and doublers to the tailboom, and replaces the existing access door frame, P/N 214–030–325, with a redesigned frame of increased thickness.

Since an unsafe condition has been identified that is likely to exist or develop on certain other BHTI Model 214ST helicopters of the same type design, the proposed AD would require, for Model 214ST helicopters, S/N 28101 through 28132, with a tailboom assembly, P/N 214–031–003–111 or 214–031–003–277, and with an emergency float kit, P/N 214–706–120, installed, inspections of the tailboom assembly for cracks within 250 hours time-in-service (TIS) or at the next 180-day float inspection, and thereafter, at each 180-day float inspection until certain modifications of the tailboom are accomplished. The modifications, which are to be accomplished if any crack is found in the tailboom or on or before accumulating an additional 500 hours TIS after the effective date of this AD, whichever occurs first, include installing stiffeners and doublers in the tailboom, and replacing the access door frame with a thicker access door frame. The actions would be required to be accomplished in accordance with the procedures contained in BHTI Alert Service Bulletin (ASB) 214ST–95–72, dated July 24, 1995.

The FAA estimates that six helicopters of U.S. registry would be affected by this proposed AD, that it would take approximately 20 work