11–1–95
Vol. 60 No. 211
Pages 55423–55650

federal register

Wednesday
November 1, 1995

Briefings on How To Use the Federal Register
For information on briefings in Washington, DC, see announcement on the inside cover of this issue.

FEDERAL REGISTER Published daily, Monday through Friday, (not published on Saturdays, Sundays, or on official holidays), by the Office of the Federal Register, National Archives and Records Administration, Washington, DC 20408, under the Federal Register Act (49 Stat. 500, as amended; 44 U.S.C. Ch. 15) and the regulations of the Administrative Committee of the Federal Register (1 CFR Ch. I). Distribution is made only by the Superintendent of Documents, U.S. Government Printing Office, Washington, DC 20402.

The Federal Register provides a uniform system for making available to the public regulations and legal notices issued by Federal agencies. These include Presidential proclamations and Executive Orders and Federal agency documents having general applicability and legal effect, documents required to be published by act of Congress and other Federal agency documents of public interest. Documents are on file for public inspection in the Office of the Federal Register the day before they are published, unless earlier filing is requested by the issuing agency.

The seal of the National Archives and Records Administration authenticates this issue of the Federal Register as the official serial publication established under the Federal Register Act. 44 U.S.C. 1507 provides that the contents of the Federal Register shall be judicially noticed.

The Federal Register is published in paper, 24x microfiche and as an online database through *GPO Access*, a service of the U.S. Government Printing Office. The online database is updated by 6 a.m. each day the Federal Register is published. The database includes both text and graphics from Volume 59, Number 1 (January 2, 1994) forward. It is available on a Wide Area Information Server (WAIS) through the Internet and via asynchronous dial-in. The annual subscription fee for a single workstation is $375. Six-month subscriptions are available for $200 and one month of access can be purchased for $35. Discounts are available for multiple-workstation subscriptions. To subscribe, Internet users should telnet to swais.access.gpo.gov and login as newuser (all lower case); no password is required. Dial-in users should use communications software and modem to call (202) 512–1661 and login as swais (all lower case); no password is required; at the second login prompt, login as newuser (all lower case); no password is required. Follow the instructions on the screen to register for a subscription for the Federal Register Online via *GPO Access.* For assistance, contact the *GPO Access* User Support Team by sending Internet e-mail to help@eids05.eids.gpo.gov, or a fax to (202) 512–1262, or by calling (202) 512–1530 between 7 a.m. and 5 p.m. Eastern time, Monday through Friday, except Federal holidays.

The annual subscription price for the Federal Register paper edition is $494, or $544 for a combined Federal Register, Federal Register Index and List of CFR Sections Affected (LSA) subscription; the microfiche edition of the Federal Register including the Federal Register Index and LSA is $433. Six month subscriptions are available for one-half the annual rate. The charge for individual copies in paper form is $8.00 for each issue, or $8.00 for each group of pages as actually bound; or $1.50 for each issue in microfiche form. All prices include regular domestic postage and handling. International customers please add 25% for foreign handling. Remit check or money order, made payable to the Superintendent of Documents, or charge to your GPO Deposit Account, VISA or MasterCard. Mail to: New Orders, Superintendent of Documents, P.O. Box 371954, Pittsburgh, PA 15250–7954.

There are no restrictions on the republication of material appearing in the Federal Register.

How To Cite This Publication: Use the volume number and the page number. Example: 60 FR 12345.

SUBSCRIPTIONS AND COPIES

PUBLIC	
Subscriptions:	
Paper or fiche	202–512–1800
Assistance with public subscriptions	512–1806
Online:	
Telnet swais.access.gpo.gov, login as newuser <enter>, no password <enter>; or use a modem to call (202) 512–1661, login as swais, no password <enter>, at the second login as newuser <enter>, no password <enter>.	
Assistance with online subscriptions	202–512–1530
Single copies/back copies:	
Paper or fiche	512–1800
Assistance with public single copies	512–1803
FEDERAL AGENCIES	
Subscriptions:	
Paper or fiche	523–5243
Assistance with Federal agency subscriptions	523–5243

For other telephone numbers, see the Reader Aids section at the end of this issue.

THE FEDERAL REGISTER

WHAT IT IS AND HOW TO USE IT

FOR: Any person who uses the Federal Register and Code of Federal Regulations.

WHO: Sponsored by the Office of the Federal Register.

WHAT: Free public briefings (approximately 3 hours) to present:

1. The regulatory process, with a focus on the Federal Register system and the public's role in the development of regulations.
2. The relationship between the Federal Register and Code of Federal Regulations.
3. The important elements of typical Federal Register documents.
4. An introduction to the finding aids of the FR/CFR system.

WHY: To provide the public with access to information necessary to research Federal agency regulations which directly affect them. There will be no discussion of specific agency regulations.

WASHINGTON, DC

[Three Sessions]

WHEN: November 14 at 9:00 am
November 28 at 9:00 am
December 5 at 9:00 am

WHERE: Office of the Federal Register Conference Room, 800 North Capitol Street NW., Washington, DC (3 blocks north of Union Station Metro)

RESERVATIONS: 202–523–4538

Printed on recycled paper containing 100% post consumer waste

Contents

Federal Register
Vol. 60, No. 211
Wednesday, November 1, 1995

Agriculture Department
See Animal and Plant Health Inspection Service
See Forest Service
See Rural Utilities Service

Animal and Plant Health Inspection Service
RULES
Exportation and importation of animals and animal products:
Rinderpest and foot-and-mouth disease, etc.; disease status change—
Uruguay, 55440–55443
Veterinarian accreditation; official animal health documents; issuance
Correction, 55443

Architectural and Transportation Barriers Compliance Board
NOTICES
Meetings:
Access Board, 55540

Army Department
NOTICES
Meetings:
Science Board, 55552
Privacy Act:
Systems of records, 55552–55562

Arts and Humanities, National Foundation
See National Foundation on the Arts and the Humanities

Bonneville Power Administration
NOTICES
Firm non-requirements products and services contracts; record of decision, 55563

Centers for Disease Control and Prevention
NOTICES
Agency information collection activities under OMB review:
Proposed agency information collection activities; comment request, 55584–55586
Breast cancer incidence among occupational cohorts exposed to ethylene oxide and polychlorinated biphenyls; NIOSH meeting, 55586

Coast Guard
RULES
Ports and waterways safety:
Safety and security zones, etc.; list of temporary rules, 55456–55458
PROPOSED RULES
Drawbridge operations:
Washington, 55515–55516
Regattas and marine parades:
Great Lakes Annual Marine Events, 55511–55515

Commerce Department
See International Trade Administration
See National Oceanic and Atmospheric Administration

Committee for the Implementation of Textile Agreements
NOTICES
Cotton, wool, and man-made textiles:
China, 55544
Costa Rica, 55544–55545

Copyright Office, Library of Congress
RULES
Phonorecords compulsory license:
Mechanical royalty rate; cost of living adjustment, 55458–55459

Defense Department
See Army Department
See Defense Logistics Agency
See Navy Department
RULES
Civilian health and medical program of uniformed services (CHAMPUS):
Dental benefit plan for expanded active duty dependents, 55448–55456
NOTICES
Meetings:
Electron Devices Advisory Group, 55545–55546
Science Board task forces, 55546
Wage Committee, 55546
Privacy Act:
Systems of records, 55546–55550

Defense Logistics Agency
NOTICES
Privacy Act:
Computer matching programs, 55550–55551

Employment and Training Administration
NOTICES
Adjustment assistance:
Abbott & Co., 55603
Douglas Aircraft Co., 55603
Hanover Shoe Co., 55603–55604
Leslie Fay Co., Inc., 55604
Federal-State unemployment compensation program:
Unemployment insurance program letters—
Federal unemployment insurance law interpretation, 55604–55611
NAFTA transitional adjustment assistance:
Abbott & Co., 55611–55612
Seagull Energy Corp. et al.; correction, 55612

Energy Department
See Bonneville Power Administration
See Federal Energy Regulatory Commission
NOTICES
Transuranic radioactive waste processing and volume reduction technology study; availability, 55563

Environmental Protection Agency
RULES
Air quality implementation plans; approval and promulgation; various States:
Clean Air Act; federally-enforceable State implementation plans for all States; availability, 55459–55460

Clean Air Act:
State operating permits programs—
California, 55460–55466
Superfund program:
National oil and hazardous substances contingency plan—
National priorities list update, 55466–55467
PROPOSED RULES
Air pollution control; new motor vehicles and engines:
On-board diagnostic systems—
Compliance with Federal requirements by optional compliance with revised California requirements, 55516–55521
Clean Air Act:
State operating permits programs—
California, 55521–55525
NOTICES
Committees; establishment, renewal, termination, etc.:
National Drinking Water Advisory Council, 55568
Confidential business information and data transfer, 55569
Federal regulatory review:
Reinvention pilot programs; proposals solicitation and comment request, 55569–55572
Meetings:
Grand Canyon Visibility Transport Commission, 55572–55573
Science Advisory Board, 55573
Whole effluent toxicity workshop, 55573–55574
Pesticide registration, cancellation, etc.:
Ciba-Geigy Corp., 55574–55575
Ciba-Geigy Corp. et al., 55575
Dupont Lorox DF Herbicide, etc., 55576–55577
Lakeshore Enterprises, 55577–55578
Superfund; response and remedial actions, proposed settlements, etc.:
Nelson McCoy Pottery Site, OH, 55578

Executive Office of the President
See Trade Representative, Office of United States

Federal Aviation Administration
RULES
Airworthiness directives:
Boeing, 55443–55445
Class E airspace, 55445–55446
Class E airspace; correction, 55649
PROPOSED RULES
Airworthiness directives:
Bell, 55495–55496
McDonnell Douglas, 55496–55498
Societe Nationale Industrielle Aerospatiale and Eurocopter France, 55491–55495
Airworthiness standards:
Commuter category airplanes; accelerated stalls; withdrawn, 55491
Class C airspace, 55498–55501
Class E airspace, 55502–55504
NOTICES
Airport noise compatibility program:
Noise exposure map—
Saipan International Airport, Northern Mariana Islands, 55643–55644
Exemption petitions; summary and disposition, 55644–55645
Meetings:
Aviation Rulemaking Advisory Committee, 55645

Federal Communications Commission
RULES
Radio broadcasting:
Broadcast station operator requirements, 55476–55484
Radio services, special:
Amateur services—
Digital codes; CLOVER, G-TOR, and PacTOR use on high frequency service bands, 55485–55486
Private land mobile services—
900 MHz SMR systems frequency band; service rules clarification, 55484–55485
PROPOSED RULES
Personal communications services:
Microwave facilities operating in 1850 to 1990 MHz (2 GHz band); relocation costs sharing, 55529–55537
NOTICES
Agency information collection activities under OMB review:
Proposed agency information collection activities; comment request, 55578–55579

Federal Emergency Management Agency
RULES
Flood elevation determinations:
Arizona et al., 55467–55471
Arkansas et al., 55471–55476
PROPOSED RULES
Flood elevation determinations:
California et al., 55525–55529
NOTICES
Disaster and emergency areas:
Florida, 55579

Federal Energy Regulatory Commission
PROPOSED RULES
Natural Gas Policy Act:
Interstate natural gas pipelines—
Business practices standards, 55504–55506
NOTICES
Electric rate and corporate regulation filings:
Central Hudson Gas & Electric Corp. et al., 55563–55565
Environmental statements; availability, etc.:
Union Electric Co., 55565–55566
Applications, hearings, determinations, etc.:
ANR Pipeline Co., 55566
Columbia Gas Transmission Corp., 55566
Columbia Gulf Transmission Co., 55566
Equitable Storage Co., 55566–55567
Kern River Gas Transmission Co., 55567
Pacific Gas Transmission Co., 55567
Transcontinental Gas Pipe Line Corp., 55567–55568

Federal Housing Finance Board
PROPOSED RULES
Affordable housing program operation:
Application requirements for limited subsidized advances, 55487–55491

Federal Reserve System
NOTICES
Meetings; Sunshine Act, 55648
Applications, hearings, determinations, etc.:
Area Bancshares Corp., 55579
Huntington Bancshares Inc., 55580
Huntington Bancshares Inc. et al., 55579–55580
National City Corp. et al., 55580–55581
National Westminster Bank plc, 55581
Royal Bank of Scotland Group plc et al., 55581–55582

Shen Financial Fund I, L.P., et al., 55582
Wachovia Corp., 55582–55583

Fish and Wildlife Service
NOTICES
Environmental statements; availability, etc.:
Incidental take permits—
Calhoun County et al., AR; red-cockaded woodpecker, 55591–55592

Food and Drug Administration
RULES
Color additives:
Astaxanthin, 55446–55448

Forest Service
NOTICES
Environmental statements; availability, etc.:
Tongass National Forest, AK, 55538–55540
Meetings:
Ecological stewardship workshop, 55540

General Services Administration
NOTICES
Federal travel:
Frequent traveler programs and benefits; promoting, encouraging, and facilitating, 55583–55584

Health and Human Services Department
See Centers for Disease Control and Prevention
See Food and Drug Administration
See Public Health Service

Housing and Urban Development Department
NOTICES
Senior Executive Service:
Performance Review Board; membership, 55587

Indian Affairs Bureau
PROPOSED RULES
Land and water:
Navajo partitioned land grazing regulations, 55506–55511
NOTICES
Environmental statements; availability, etc.:
Cortina Indian Rancheria, CA; construction and operation lease for integrated waste management facility, 55587–55588
Indian child custody proceedings; jurisdiction resumption petitions:
Washoe Tribe of Nevada and California et al., 55588
Liquor and tobacco sale or distribution ordinance:
Yerington Paiute Tribe, NV, 55588–55589

Interior Department
See Fish and Wildlife Service
See Indian Affairs Bureau
See Land Management Bureau
See Minerals Management Service
See Surface Mining Reclamation and Enforcement Office

International Trade Administration
NOTICES
Antidumping and countervailing duties:
Administrative review requests, 55540–55541
Antidumping duty orders and findings:
Intent to revoke, 55541–55542
Harmonized System of tariff classification; conversion for antidumping and countervailing duty proceedings:
Textile mill products from—
Argentina, 55542–55543

International Trade Commission
NOTICES
Import investigations:
Low-power computer hard disk drive systems and products containing same, 55597
Manganese metal from—
China, 55597–55598

Interstate Commerce Commission
NOTICES
Practice and procedure:
Authority revocation process, 55598
Railroad operation, acquisition, construction, etc.:
Rio Valley Railroad, Inc., et al., 55598–55599
Railroad services abandonment:
Idaho Northern & Pacific Railroad Co., 55599
Utah Railway Co., 55599–55600

Justice Department
NOTICES
Agency information collection activities under OMB review:
Proposed agency information collection activities; comment request, 55600–55601

Labor Department
See Employment and Training Administration
See Labor Statistics Bureau
NOTICES
Agency information collection activities under OMB review:
Proposed agency information collection activities; comment request, 55601–55602

Labor Statistics Bureau
NOTICES
Agency information collection activities under OMB review:
Proposed agency information collection activities; comment request, 55602–55603

Land Management Bureau
NOTICES
Pipeline right-of-way applications:
New Mexico; correction, 55589
Withdrawal and reservation of lands:
New Mexico, 55589–55591

Library of Congress
See Copyright Office, Library of Congress

Minerals Management Service
NOTICES
Meetings:
Minerals Management Advisory Board, 55592
Royalty-in-Kind (RIK) procedures, expanded use; workshops summary, 55592–55597

National Foundation on the Arts and the Humanities
NOTICES
Meetings:
Humanities Panel, 55612

National Highway Traffic Safety Administration
NOTICES
National Award for Advancement of Motor Vehicle Research and Development; eligibility requirements and request for nominations, 55645–55646

National Oceanic and Atmospheric Administration
NOTICES
Meetings:
Western Pacific Fishery Management Council, 55543
Permits:
Marine mammals, 55543–55544

National Science Foundation
NOTICES
Senior Executive Service:
Performance Review Board; membership, 55612

Navy Department
NOTICES
Meetings:
Naval Academy, Board of Visitors, 55562–55563

Nuclear Regulatory Commission
NOTICES
Petitions; Director's decisions:
Northeast Utilities, 55612–55613

Office of United States Trade Representative
See Trade Representative, Office of United States

Personnel Management Office
RULES
Prevailing rate systems, 55423
NOTICES
Excepted service:
Schedules A, B, and C; positions placed or revoked—Update, 55613–55614

Public Health Service
See Centers for Disease Control and Prevention
See Food and Drug Administration
NOTICES
Veterans Health Care Act:
Limitation on prices of drugs purchased by covered entities—
Contracted pharmacy services, 55586–55587

Rural Utilities Service
RULES
Electric loans:
Borrower accounting requirements, 55423–55440

Securities and Exchange Commission
NOTICES
Self-regulatory organizations; proposed rule changes:
Boston Stock Exchange, Inc., 55615–55617
Chicago Board Options Exchange, Inc., 55617–55623
Depository Trust Co., 55623–55625
New York Stock Exchange, Inc., 55625–55628
Pacific Stock Exchange, Inc., 55628–55629
Participants Trust Co., 55629–55630
Philadelphia Stock Exchange, Inc., et al., 55630–55632
Applications, hearings, determinations, etc.:
Colonial Small Stock Index Trust, 55632–55633
Dimensional Fund Advisors Inc., 55633–55634
Dreyfus Equity Funds, Inc., 55634
Dreyfus Omni Fund, Inc., 55634–55635
Franklin Tax-Free Advantage Fund, 55635
Premier Opportunity Fund, Inc., 55636
Premier Small Company Value Fund, Inc., 55635–55636
Sixty Wall Street Fund 1995, L.P., et al., 55636–55642

Small Business Administration
NOTICES
Agency information collection activities under OMB review, 55642
Meetings; district and regional advisory councils:
Hawaii, 55642

Social Security Administration
NOTICES
Social Security benefits:
Disability claim process; testing modifications to prehearing procedures and decisions by adjudication officers, 55642–55643

Surface Mining Reclamation and Enforcement Office
RULES
Permanent program and abandoned mine land reclamation plan submissions:
Indiana; correction, 55649

Textile Agreements Implementation Committee
See Committee for the Implementation of Textile Agreements

Thrift Supervision Office
NOTICES
Applications, hearings, determinations, etc.:
Home Federal Savings & Loan Association, 55646–55647

Trade Representative, Office of United States
NOTICES
Foreign trade barriers; national trade estimate report, 55614–55615

Transportation Department
See Coast Guard
See Federal Aviation Administration
See National Highway Traffic Safety Administration

Treasury Department
See Thrift Supervision Office

Reader Aids
Additional information, including a list of public laws, telephone numbers, and finding aids, appears in the Reader Aids section at the end of this issue.

Electronic Bulletin Board
Free Electronic Bulletin Board service for Public Law numbers, Federal Register finding aids, and a list of documents on public inspection is available on 202–275–1538 or 275–0920.

CFR PARTS AFFECTED IN THIS ISSUE

A cumulative list of the parts affected this month can be found in the Reader Aids section at the end of this issue.

5 CFR
532.....55432

7 CFR
1767.....55432

9 CFR
94.....55440
161.....55443

12 CFR
Proposed Rules:
960.....55487

14 CFR
39.....55443
71 (2 documents) 55445, 55649
Proposed Rules:
23.....55491
39 (3 documents) 55491, 55495, 55496
71 (3 documents) 55498, 55502, 55503

18 CFR
Proposed Rules:
284.....55504

21 CFR
73.....55446

25 CFR
Proposed Rules:
161.....55506

30 CFR
914.....55649

32 CFR
199.....55448

33 CFR
100.....55456
165.....55456
Proposed Rules:
100.....55511
117.....55515

37 CFR
255.....55458

40 CFR
52.....55459
70.....55460
300.....55456
Proposed Rules:
52.....55516
70.....55516
86.....55521

44 CFR
65 (2 documents) 55467, 55469
67.....55471
Proposed Rules:
67.....55525

47 CFR
73.....55476
74.....55476
90.....55484
97.....55485
Proposed Rules:
Ch. I.....55529

Rules and Regulations

Federal Register
Vol. 60, No. 211
Wednesday, November 1, 1995

This section of the FEDERAL REGISTER contains regulatory documents having general applicability and legal effect, most of which are keyed to and codified in the Code of Federal Regulations, which is published under 50 titles pursuant to 44 U.S.C. 1510.

The Code of Federal Regulations is sold by the Superintendent of Documents. Prices of new books are listed in the first FEDERAL REGISTER issue of each week.

OFFICE OF PERSONNEL MANAGEMENT

5 CFR Part 532

RIN 3206–AH20

Prevailing Rate Systems; Abolishment of Ocean, NJ, Nonappropriated Fund Wage Area

AGENCY: Office of Personnel Management.

ACTION: Interim rule with request for comments.

SUMMARY: The Office of Personnel Management is issuing interim regulations to abolish the Ocean, NJ, nonappropriated fund (NAF) Federal Wage System (FWS) wage area and redefine Ocean County as an area of application to the Burlington, NJ, NAF wage area for pay-setting purposes. No employee's wage rate will be reduced as a result of this change.

DATES: This interim rule becomes effective on November 1, 1995. Comments must be received by December 1, 1995. Employees currently paid rates from the Ocean, NJ, NAF wage schedule will continue to be paid from that schedule until their conversion to the Burlington, NJ, NAF wage schedule on the effective date of the new Burlington, NJ, wage schedule, December 30, 1995.

ADDRESSES: Send or deliver comments to Donald J. Winstead, Assistant Director for Compensation Policy, Human Resources Systems Service, U.S. Office of Personnel Management, Room 6H31, 1900 E Street NW., Washington, DC 20415, or FAX: (202) 606–0824.

FOR FURTHER INFORMATION CONTACT: Paul Shields, (202) 606–2848.

SUPPLEMENTARY INFORMATION: The Department of Defense (DOD) recommended to the Office of Personnel Management that the Ocean, NJ, FWS NAF wage area (a one-county area) be abolished and that Ocean County be added as an area of application to the Burlington, NJ, NAF wage area. This change is necessary because with the downsizing of DOD activities, there are now only 20 NAF FWS employees in the Ocean wage area.

As required in regulation, 5 CFR 532.219, the following criteria were considered in redefining these wage areas:

(1) Proximity of largest activity in each county;

(2) Transportation facilities and commuting patterns; and

(3) Similarities of the counties in:

(i) Overall population;

(ii) Private employment in major-industry categories; and

(iii) Kinds and sizes of private industrial establishments.

Both proximity and similarities in population, private sector employment, and industry patterns favor redefinition of Ocean County to the Burlington, NJ, wage area.

The Federal Prevailing Rate Advisory Committee reviewed this recommendation and by consensus recommended approval.

Pursuant to 5 U.S.C. 553(b)(3)(B), I find that good cause exists for waiving the general notice of proposed rulemaking. Also, pursuant to section 553(d)(3) of title 5, United States Code, I find that good cause exists for making this rule effective in less than 30 days. The notice is being waived and the regulation is being made effective in less than 30 days because preparations for the 1995 Ocean, NJ, NAF wage area survey must otherwise begin immediately.

Regulatory Flexibility Act

I certify that these regulations will not have a significant economic impact on a substantial number of small entities because they affect only Federal agencies and employees.

List of Subjects in 5 CFR Part 532

Administrative practice and procedure, Freedom of information, Government employees, Reporting and recordkeeping requirements, Wages.

Office of Personnel Management.

Lorraine A. Green,

Deputy Director.

Accordingly, OPM is amending 5 CFR part 532 as follows:

PART 532—PREVAILING RATE SYSTEMS

1. The authority citation for part 532 continues to read as follows:

Authority: 5 U.S.C. 5343, 5346; § 532.707 also issued under 5 U.S.C. 552.

Appendix B to Subpart B of Part 532 [Amended]

2. In appendix B to subpart B, the listing for the State of New Jersey is amended by removing the entry for Ocean.

3. Appendix D to subpart B is amended by removing the wage area list for Ocean, New Jersey, and by revising the list for Burlington, New Jersey, to read as follows:

Appendix D to Subpart B of Part 532—Nonappropriated Fund Wage and Survey Areas

* * * * *

New Jersey

Burlington

Survey Area

New Jersey:
Burlington

Area of Application. Survey Area Plus:

New Jersey:
Atlantic Ocean

* * * * *

[FR Doc. 95–26946 Filed 10–31–95; 8:45 am]

BILLING CODE 6325–01–M

DEPARTMENT OF AGRICULTURE

Rural Utilities Service

7 CFR Part 1767

RIN 0572–AA23

Accounting Requirements for RUS Electric Borrowers

AGENCY: Rural Utilities Service, USDA.

ACTION: Final rule.

SUMMARY: This final rule amends the Rural Utilities Service's (RUS) regulations on accounting policies and procedures for RUS electric borrowers as set forth in RUS's regulations concerning Accounting Requirements for RUS Electric Borrowers, Uniform System of Accounts. This final rule eliminates the requirement that RUS borrowers place the difference between the amount accrued for postretirement

benefits during the year and the amount paid on a ''pay-as-you-go'' basis in an external, irrevocable trust to be used solely for postretirement benefits. RUS borrowers may, however, elect to voluntarily fund their postretirement benefit obligations. This final rule sets forth new accounting interpretations that address the requirements of recently issued pronouncements of the Financial Accounting Standards Board concerning the accounting for postemployment benefits and the accounting for certain investments in debt and equity securities.

In addition, this final rule also sets forth a new accounting procedure for storm damage costs and the associated funds received from the Federal Emergency Management Administration (FEMA). It also clarifies the accounting prescribed for computer software costs by specifying the accounts to which generalized software costs should be amortized and to which the costs of maintaining, updating, and converting files should be expensed.

In addition, this rule will identify the organizational unit within RUS to which borrower requests for departures from or interpretations of the RUS Uniform System of Accounts (USoA) should be submitted.

This regulation will facilitate the effective and economical operation of a business enterprise and ensure that adequate and reliable financial records be maintained.

EFFECTIVE DATE: This rule is effective December 1, 1995.

FOR FURTHER INFORMATION CONTACT: Ms. Roberta D. Purcell, Chief, Technical Accounting and Auditing Staff, Borrower Accounting Division, Rural Utilities Service, AG Box 1523, room 2221, South Building, U.S. Department of Agriculture, Washington, DC 20250, telephone number (202) 720–5227.

SUPPLEMENTARY INFORMATION:

Executive Order 12866

This final rule has been determined to be not significant for the purposes of Executive Order 12866 and therefore has not been reviewed by OMB.

Regulatory Flexibility Act Certification

The Administrator, RUS, has determined that the Regulatory Flexibility Act (5 U.S.C. 601 *et seq.*) does not apply to this final rule.

Information Collection and Recordkeeping Requirements

In compliance with the Office of Management and Budget (OMB) regulations (5 CFR Part 1320) which implement the Paperwork Reduction Act of 1980 (Pub. L. 96–511) and section 3504 of that Act, the information collection and recordkeeping requirements contained in this final rule have been approved by the Office of Management and Budget under control number 0572–0002. Comments regarding these requirements may be sent to the United States Department of Agriculture, Clearance Office, OIRM, room 404–W, Washington, DC 20250 or to the Office of Management and Budget, Office of Information and Regulatory Affairs, room 10102, Washington, DC 20503.

National Environmental Policy Act Certification

The Administrator, RUS, has determined that this final rule will not significantly affect the quality of the human environment as defined by the National Environmental Policy Act of 1969 (42 U.S.C. 4321 *et seq.*). Therefore, this action does not require an environmental impact statement or assessment.

Catalog of Federal Domestic Assistance

The program described by this final rule is listed in the Catalog of Federal Domestic Assistance Programs under number 10.850—Rural Electrification Loans and Loan Guarantees. This catalog is available on a subscription basis from the Superintendent of Documents, the United States Government Printing Office, Washington, DC 20402.

Executive Order 12372

This final rule is excluded from the scope of Executive Order 12372, Intergovernmental Consultation. A Notice of Final Rule entitled Department Programs and Activities Excluded from Executive Order 12372 (50 FR 47034) exempts RUS electric loans and loan guarantees from coverage under this Order.

Executive Order 12778

This final rule has been reviewed under Executive Order 12778, Civil Justice Reform. This final rule: (1) Will not preempt any state or local laws, regulations, or policies, unless they present an irreconcilable conflict with this rule; (2) Will not have any retroactive effect except as stated herein; and (3) Will not require administrative proceeding before parties may file suit challenging the provisions of this rule. This final rule will not have any retroactive effect unless RUS borrowers have not properly complied with generally accepted accounting principles. Generally accepted accounting principles, as issued by the Financial Accounting Standards Board and its predecessors, are applicable to all financial reporting entities, including RUS borrowers, regardless of whether RUS publishes its interpretations. In accordance with generally accepted accounting principles, the accounting principles set forth in Statement of Financial Accounting Standards No. 112, Employers' Accounting for Postemployment Benefits (Statement No. 112), and Statement of Financial Accounting Standards No. 115, Accounting for Certain Investments in Debt and Equity Securities (Statement No. 115), should have been adopted by all RUS borrowers for fiscal years beginning after December 15, 1993. The interpretations of these Statements of Financial Accounting Standards issued by RUS in this final rule instruct borrowers in the proper accounts to be used within the framework and requirements of the RUS Uniform System of Accounts. Therefore, this final rule will have no retroactive effect except for borrowers that did not properly implement Statements No. 112 and No. 115 when and as required by generally accepted accounting principles.

Background

In order to facilitate the effective and economical operation of a business enterprise, adequate and reliable financial records must be maintained. Accounting records must provide a clear and accurate picture of current economic conditions from which management can make informed decisions in charting the company's future. The rate-regulated environment in which an electric utility operates causes an even greater need for financial information that is accurate, complete, and comparable with that of other electric utilities.

RUS, as a federal lender and mortgagee, and in furthering the objectives of the Rural Electrification Act of 1936 (RE Act) (7 U.S.C. 901 *et seq.*) has a legitimate programmatic interest and a substantial financial interest in requiring adequate records to be maintained. In order to provide RUS with financial information that can be analyzed and compared with the operations of other borrowers in the RUS program, all RUS borrowers must maintain financial records that utilize uniform accounts and uniform accounting policies and procedures. The standard RUS security instrument, therefore, requires borrowers to maintain their books, records, and accounts in accordance with methods and principles of accounting prescribed

by RUS in the USoA for its electric borrowers.

To ensure that borrowers consistently account for and apply the provisions of recent pronouncements of the Financial Accounting Standards Board, the USoA must be revised and updated as changes in generally accepted accounting principles occur. RUS is, therefore, adding two new accounting interpretations to Section 1767.41, Accounting Methods and Procedures Required of All RUS Borrowers, that address the accounting requirements recently set forth in Statement of Financial Accounting Standards No. 112, Employers' Accounting for Postemployment Benefits (Statement No. 112), and Statement of Financial Accounting Standards No. 115, Accounting for Certain Investments in Debt and Equity Securities (Statement No. 115). Statement No. 112 establishes the standards of financial accounting and reporting for employers who provide benefits to former or inactive employees after employment but before retirement while Statement No. 115 establishes the standards of financial accounting and reporting for investments in debt securities and for investments in equity securities that have readily determinable fair values. Copies of Statements of Financial Accounting Standards may be obtained from the Order Department of the Financial Accounting Standards Board, 401 Merritt 7, P.O. Box 5116, Norwalk, Connecticut 06856–5116.

RUS is also amending accounting Interpretation No. 626, Rural Economic Development Loan and Grant Program, to establish the accounting policies and procedures for the Rural Economic Development Grant program recently established by the Rural Business and Cooperative Development Service.

Interpretation No. 604, Deferred Compensation, sets forth the specific accounting entries and the balance sheet reporting requirements for participation in the National Rural Electric Cooperative Association's (NRECA) Deferred Compensation Program. Under the terms of this program, a portion of an employee's current salary may be deferred until such time as the employee retires or terminates employment. The employer makes a contribution into the deferred compensation fund in an amount equal to the salary deferred. As such, the borrower records both an asset and a liability—an asset in the amount of the contributions to the fund and a liability to that employee for future payment of the deferred compensation. Current RUS procedures require the asset and liability to be offset for financial reporting purposes. Financial Accounting Standards Board Interpretation No. 39, Offsetting of Amounts Related to Certain Contracts, states that the offsetting of assets and liabilities in the balance sheet is improper except where a right of offset exists and a right of offset exists only when each of two parties owes the other determinable amounts. Contributions to the deferred compensation fund are payable to the borrower and, as such, the right of offset does not exist. RUS is, therefore, amending Interpretation No. 604 to comply with generally accepted accounting principles by requiring the asset and liability to be reported separately.

In December 1990, the Financial Accounting Standards Boards issued Statement of Financial Accounting Standards No. 106, Employers' Accounting for Postretirement Benefits Other than Pensions (Statement No. 106). Statement No. 106 requires reporting entities to accrue the expected cost of postretirement benefits during the years in which the employee provides service to the reporting entity. Prior to the issuance of Statement No. 106, most reporting entities accounted for postretirement benefit costs on a ''pay-as-you-go'' basis; that is, costs were recognized when paid, not when the employee provided service to the reporting entity in exchange for the benefits.

A postretirement benefit plan is a deferred compensation arrangement in which an employer promises to exchange future benefits for an employee's current services. Postretirement benefits include, but are not limited to, health care, life insurance, tuition assistance, day care, legal services, and housing subsidies provided outside of a pension plan.

The RUS USoA parallels the USoA prescribed by the Federal Energy Regulatory Commission (FERC) for electric utilities and, as such, is consistent with the standards of financial accounting for the electric utility industry as a whole. As FERC amends its USoA, RUS reviews the appropriateness and applicability of each amendment and proposes revisions, as necessary, to the RUS USoA.

On December 17, 1992, FERC issued its policy statement on postretirement benefits. Included in its statement was the requirement that natural gas pipelines and public utilities make cash deposits into an external, irrevocable trust fund, in amounts that are proportional and, on an annual basis, equal to the annual test period allowance for postretirement benefits. RUS reviewed and analyzed these accounting policies and procedures, including the funding requirement, and promulgated these requirements in its USoA. The RUS USoA requires RUS borrowers to fund the liability associated with postretirement benefit costs by making cash deposits into an irrevocable trust.

Since the issuance of the final rule, RUS borrowers and their representatives through the NRECA, have questioned the necessity for RUS borrowers to fund their postretirement benefit obligations. FERC and a majority of state utility commissions require funding for the inclusion of postretirement benefit expenses in rates in order to deter investor-owned utilities from arbitrarily increasing postretirement benefit costs. Due to the many variables involved in estimating postretirement benefit costs, the cost incorporated into rates can easily be manipulated if an investor-owned utility desires to increase cash flow through increased accruals of postretirement benefit costs. By requiring utilities to fund an amount equal to the postretirement benefit costs that were recovered through rates, much of the incentive for investor-owned utilities to overestimate postretirement benefit costs is eliminated.

The ratepayers/consumers, and investors/owners of an RUS electric borrower, because of its cooperative organizational structure, are one in the same. RUS cooperatives do not, therefore, have this same incentive to over estimate postretirement benefits costs because profits do not accrue to a separate, different class of investors/owners. In fact, RUS electric borrowers have no incentive to overestimate postretirement benefit costs to increase rates since the investors/owners are the same as the ratepayers/consumers. RUS has, therefore, eliminated, through the publication of this final rule, the funding requirement currently contained in Section 1767.41, Interpretation No. 627, Postretirement Benefits. RUS borrowers may, however, elect to voluntarily fund their postretirement benefit obligations.

Finally, RUS is revising Section 1767.13, Departures from the Prescribed RUS Uniform System of Accounts, and Section 1767.14, Interpretations of the RUS Uniform System of Accounts, to specifically identify the organizational unit within RUS to which requests for departures from and interpretations of the RUS USoA should be addressed. This revision should assist borrowers in filing requests and should expedite the review process within RUS.

Comments

A proposed rule entitled Accounting Requirements for RUS Electric Borrowers, published September 2, 1994, at 59 FR 45631, invited interested parties to submit comments on or before November 1, 1994. Twenty-seven comments were received which included submissions from NRECA, RUS electric borrowers, certified public accounting firms, and statewide organizations. The comments submitted by NRECA were based upon a joint review of the proposed rule by the Accounting and Depreciation Committee, a subcommittee of the Generation and Transmission Managers Association Technical Advisory Committee, and the Distribution Systems Accounting and Tax Committee. The following paragraphs address the various topics that were discussed by the commenters.

Effective Date of Changes

Comment. Three commenters requested that RUS recognize the significant administrative burden placed on borrowers when changes in accounting methods are imposed at year end and encouraged RUS to implement all final rulemakings at the beginning of a year.

Response. RUS is sympathetic to the commenters' concerns and, in no instance, is it RUS's intent to wait until year end to implement or prescribe new accounting requirements. Regulations issued by RUS are, however, reviewed for legal sufficiency by the Office of General Counsel. RUS regulations are also reviewed by the Office of Management and Budget and the Federal Register before final publication. This review process can be lengthy and time consuming. As a result, a regulation that is scheduled to be published well in advance of a year's end may not be published as anticipated. While RUS could delay publication of a final rule until after year's end; in many instances, the regulation addresses Statements of Financial Accounting Standards issued by the Financial Accounting Standards Boards that must be implemented by year end. In these circumstances, RUS believes that the benefits derived by its borrowers from having ready access to accounting guidance outweigh the impositions that may be created by a year-end publication date.

Section 1767.13, Departures From the Prescribed RUS USoA

Comment. Paragraph (d) of Section 1767.13, Departures from the Prescribed RUS USoA, requires borrowers to obtain RUS approval prior to implementing the provisions of Statements of Financial Accounting Standards No. 71, Accounting for the Effects of Certain Types of Regulation (Statement No. 71); No. 90, Regulated Enterprises—Accounting for Abandonments and Disallowances of Plant Costs (Statement No. 90); and No. 92, Regulated Enterprises—Accounting for Phase-in Plans (Statement No. 92). One commenter suggested that a reference to Statement of Financial Accounting Standards No. 101, Regulated Enterprises—Accounting for the Discontinuance of Application of FASB Statement No. 71 (Statement No. 101), be included as it impacts upon regulatory enterprises as do the aforementioned statements. The same commenter argued that RUS cannot establish generally accepted accounting principles and, therefore, RUS regulations should not prohibit or require advance approval of the adoption of accounting standards except as to filings with RUS.

Response. RUS's intent in requiring approval of departures from the prescribed RUS USoA was to implement the provisions of Article II, Section 12 of the standard form of RUS security instrument which requires RUS borrowers to, at all times, keep and safely preserve proper books, records, and accounts in which full and true entries will be made of all of the dealings, business and affairs of the Mortgagor, in accordance with the methods and principles of accounting prescribed in the USoA. This covenant and requirement is in each and every standard form of RUS security instrument and has been a requirement for numerous years. Pursuant to Section 4 of the RE Act, this covenant is one of many terms and conditions prescribed by the Administrator of RUS relating to the expenditure of the moneys loaned and the security therefore with respect to loans and loan guarantees.

This rule is not an attempt at establishing generally accepted accounting principles nor is it intended to prohibit borrowers from adhering to the standards issued by the Financial Accounting Standards Board. It is intended to insure that similar transactions are accounted for in a consistent manner in accordance with the USoA and to allow RUS to properly evaluate a borrower's operating performance. Consistency in the application of accounting methodologies is critical if RUS is to properly evaluate a borrower's financial condition, programmatic performance, and ultimately its creditworthiness.

Statements Nos. 71, 90, and 92 allow rate-regulated enterprises to defer current period expenses and revenues beyond that allowed for nonregulated enterprises provided that certain criteria are met. Included among the criteria is the requirement that an enterprise's rates for regulated services or products provided to its customer are established by or are subject to approval by an independent, third-party regulator or by its own governing board empowered by statute or contract to establish rates that bind customers. Because the vast majority of RUS borrowers are not subject to rate regulation by state public utility commissions, their boards of directors, under the provisions of Statement No. 71, may defer current period income and expense items without the intervention of an independent third-party. As such, a borrower could defer current period expenses and, as a result, not meet the financial ratio requirements set forth in its mortgage. RUS implemented this requirement for purposes of assuring that loans and loan guarantees are repaid. Therefore, RUS does not believe that this requirement should be revised at this time.

Statement No. 101, however, is a more conservative standard in that it establishes the reporting requirements for enterprises that no longer meet the criteria for application of Statement No. 71. It does not permit the deferral of income or expense items that might arbitrarily inflate a borrower's financial ratios. Therefore, RUS believes that there is no benefit to the Federal government of imposing a requirement that borrowers obtain RUS approval prior to implementing the provisions of Statement No. 101.

Comment. The revisions proposed to Section 1767.13 were intended to specify to whom, in RUS, requests for departures from the USoA and approvals of deferrals under Statements Nos. 71, 90, 92 were to be addressed. The proposed rule identified the Director of the Borrower Accounting Division (BAD) as the contact for such requests. Two commenters expressed concern that the area offices should be consulted as part of the approval process.

Response. All requests for approvals of departures from the USoA and implementations of deferral plans are processed by the Borrower Accounting Division. RUS can provide a more timely response to a borrower's request if it is submitted directly to the division that has been delegated the authority to review such requests. A request for approval of a departure from the USoA is a technical interpretation and, as

such, is reviewed, processed, and approved by the Director, BAD. A request for approval of a deferral plan, however, involves not only the accounting aspect of the deferral, but the eventual impact upon RUS's loan security, as well. Such requests are, therefore, processed and reviewed by BAD for technical accuracy and approved by the area office. RUS believes that this process is the most effective and efficient use of human resources and provides the most timely response to our borrowers. For these reasons, no revisions were made in the final rule.

Comment. Section 1767.13 requires borrowers to obtain approval before implementing an expense or revenue deferral plan. Two commenters recommended that more latitude be given to borrowers who utilize deferral plans when loan security is not adversely affected by deferrals of immaterial dollar amounts. Specifically, the commenters recommended that revenue and expense deferrals that, when combined with all other deferrals, are less than a specified percentage of net utility plant or a specified percentage of equity be exempted from RUS approval.

Response. RUS agrees, in part, that immaterial deferrals that do not impact upon loan security could be exempt from RUS approval. However, there is a question as to what constitutes an immaterial deferral. RUS will consider, in the next proposed revision of Part 1767, establishing materiality thresholds for approvals of both deferral plans and departures from the USoA.

Comment. Two commenters recommended that RUS establish a time frame in which decisions on requests for approvals of deferral plans, departures from and interpretations of the USoA will be made by RUS.

Response. RUS recognizes the importance of obtaining a timely response to approval requests. However, RUS believes that the establishment of specific time frames for such approvals would be impractical under the circumstances. Approvals are often delayed because a borrower has submitted incomplete or insufficient information. The time required for additional correspondence and the uncertainty of when the additional information will be submitted is out of RUS' control. As previously discussed in the comment section, RUS has undertaken steps to ensure that requests are processed and reviewed in the most efficient manner practicable. For these reasons, RUS has not instituted approval time frames in this final rule.

Section 1767.14, Interpretation of the RUS Uniform System of Accounts

Comment. Three commenters requested that RUS clarify whether requests for interpretations of the USoA must be posed in writing or if oral requests were acceptable.

Response. It is common practice for RUS to address borrower, certified public accountant (CPA), and industry questions orally and, in effect, provide interpretations of the USoA. In order to be able to rely on an interpretation and in order for RUS to maintain uniformity throughout the program, interpretations should be addressed, in writing, and Section 1767.14 has been revised accordingly.

Section 1767.41, Accounting Methods and Procedures Required of All RUS Borrowers

Interpretation No. 136, Storm Damage

Comment. Two commenters supported the accounting for storm damage as prescribed in Accounting Interpretation No. 136; however, they recommended that the interpretation be expanded to include the accounting for the administrative fee paid by FEMA.

Response. RUS agrees with the recommendation and has revised the final rule accordingly.

Interpretation No. 401, Computer Software

Comment. Three commenters questioned whether the cost of applications software should be deferred in Account 186, Miscellaneous Deferred Debits. One commenter specifically recommended capitalizing the cost in Account 301, Organizations. The other commenters argued that there is essentially no difference between generalized software and applications software and that it is more appropriate to capitalize both into a plant account and record depreciation.

Response. In accordance with a Technical Practice Aid issued by the American Institute of Certified Public Accountants, the cost of computer software purchased for internal use in activities other than research and development should be capitalized and depreciated over its estimated useful service life in accordance with Accounting Research Bulletin No. 43, Chapter 9, Depreciation, Paragraph 5. RUS, therefore, agrees with the commenters that recommended that applications software be capitalized and depreciated in a manner similar to that of generalized software. Interpretation No. 401 has been revised accordingly.

Comment. Interpretation No. 401 requires that all costs incurred in the revision of software or in the maintenance, updating, and conversion of files, and all costs of computer software having a useful service life of less than 1 year be charged to expense in Account 921, Office Supplies and Expenses, in the period incurred. One commenter argued that Account 921 is not always the most appropriate account in which to classify such costs. Rather, the costs should be functionalized to the various construction, retirement, operations, and maintenance accounts based upon the activity being supported.

Response. The note to Account 921 specifically states that office expenses that are clearly applicable to any category of operating expenses other than the administrative and general category should be included in the appropriate account in such category. Account 921 does not, however, permit capitalization of any portion of these costs. In this final rule, RUS has clarified Interpretation No. 401 to allow such costs to be recorded in the appropriate functional operating expense accounts; however, capitalization to either construction or retirement activities is not permitted.

Interpretation No. 604, Deferred Compensation

Comment. Interpretation No. 604 sets forth the accounting requirements associated with the NRECA Deferred Compensation Program. It requires that the accumulated change in the fund value resulting from investment gains or losses to be recorded as an increase/decrease in the asset and liability accounts. One commenter took issue with this accounting methodology and recommended that increases in the fund be accounted for as an increase in the asset with an offsetting credit to interest income. Because the cooperative has an obligation to pass the investment earnings along to the employee, the commenter recommended that the liability account should be increased with an offsetting charge to interest expense.

Response. In response to this comment, RUS contacted NRECA to obtain a better understanding of the internal operations of the Deferred Compensation Program. When an employer offers a deferred compensation arrangement to an employee, the amount of the annual contribution (deferred compensation), currently an amount up to $7,500, is determined. The cooperative then invests these funds with NRECA in the cooperative's name. The funds are invested in the Homestead Fund which currently consists of four funds—the

Short-term Bond Fund, the Value Fund, the Short-term Government Securities Fund, and the Daily Income Fund. Detailed investment information is maintained for each cooperative by participant. While the employee selects the funding program and bears its risk through the benefits ultimately derived, the cooperative retains legal ownership of the investments.

The accounting currently set forth in Interpretation No. 604 assumed that the cooperative bore the investment risk and has, therefore, been revised accordingly.

Interpretation No. 626, Rural Economic Development Loan and Grant Program

Comment. Three commenters objected to recording the funds received from a Rural Economic Development Grant as income. Rather, the commenters believed that the economic development grant funds are more in the nature of a capital item provided by Congress to promote particular purposes and should therefore, be recorded in Account 208, Donated Capital. The commenters argue that classifying these grant funds as income distorts a RUS borrower's financial statistics as well as adversely impacts upon the 85% member income test a cooperative must meet in order to remain income tax exempt.

Response. The establishment of a revolving loan program by the grantee of a Federal grant creates special concerns from an accounting perspective. The customary Federal grant is made for a specific project or purpose. The income to the grantee is offset by the costs incurred in the project, thereby eliminating any net income effect. When a revolving loan program is established by the grantee, the grantee incurs no immediate expense with which to offset the grant funds. While there may be the incidental costs of administering the loan program, no additional costs are incurred unless a loan is defaulted upon. In fact, under the Rural Business and Cooperative Development Service's grant program, after the initial grant funds have been loaned and repaid, the borrower may charge a reasonable rate of interest on its revolving loans. The grant program may, therefore, actually become income producing.

Additionally, because 7 CFR Part 1703, Subpart B, Rural Economic Development Loan and Grant Program, is somewhat ambiguous as to the final disposition of the grant funds upon termination of the revolving loan program, further accounting concerns are raised.

The accounting for a rural economic development grant is therefore, dependent upon the grant agreement itself. If the agreement requires the grantee to repay the grant upon termination of the revolving loan program, the funds must be recorded as a liability. If the grant agreement stipulates that there is no obligation for repayment, the funds should be recorded as a permanent infusion of capital. If, however, the agreement is silent as to the final disposition of the grant funds, the funds must be recorded as income. The final rule has been revised accordingly.

Interpretation No. 627, Postretirement Benefits

Comment. Of the 27 comments received, only two commenters believed that RUS should continue to require borrowers to fund their postretirement benefit obligations. Those opposed to the funding requirement argued that the funding of postretirement benefits is an issue of importance to utility management, rate regulators, and employees; however, it should be of little importance to a utility's lenders. They argue that cash set aside in an external trust for the sole purpose of financing postretirement benefits could adversely affect loan security as cash that would otherwise be available to meet debt service would be available only for postretirement benefits. Those in favor of funding argued that unfunded benefits present a risk of future loan defaults. The beneficiaries of the unfunded benefits will be co-creditors along with the Federal government and the ratepayers/owners of the cooperatives will place their own self interest ahead of the fiscal integrity of the cooperative, thereby failing to raise rates when necessary to meet their Federal debt service obligations.

Response. While the risk exists that the ratepayers/owners of a certain few borrowers may benefit at the detriment of the Federal government, the vast majority of RUS borrowers are financially sound, fiscally responsible entities. The funding requirement, as currently set forth, significantly limits a borrower's investment options. It also limits flexibility in managing a borrower's operations and may put a borrower at a competitive disadvantage. While RUS strongly encourage borrowers to fund their postretirement benefit obligations for the reasons proffered above, RUS considers its current funding requirement to be unduly burdensome. Similarly, because funding in an irrevocable trust may, in fact, impair repayment of loans, RUS believes that it would not be undertaking a substantial risk if it were to eliminate the funding requirement. For these reasons, no revision was made to the final rule.

Comment. Interpretation No. 627 requires RUS borrowers to have rates in place sufficient to recover their current period postretirement benefit expense and any amortization of the transition obligation at the time of adoption of Statement No. 106. Evidence of such rate recovery in the form of a board resolution or commission order must be submitted to RUS. One commenter argued that the submission of a board resolution is unnecessary. Special attention is not required by the board of directors for other types of expenses and should not, therefore, be mandated for postretirement benefits.

Response. Prior to the issuance of Statement No. 106, many utilities argued that rate-regulated enterprises should be allowed to continue to account for postretirement benefits on a ''pay-as-you-go'' basis provided that postretirement benefit costs were included in rates on a similar basis. RUS, in Interpretation No. 627, specifically requires its borrowers to adopt the accrual accounting provisions of Statement No. 106 and prohibits its borrowers from remaining on the ''pay-as-you-go'' basis. Inherent in this concept is the recovery, through rates, of the annual accrual for postretirement benefit costs. While RUS agrees that the board is not asked to specifically address other current period operating expenses unless they have been deferred under the provisions of Statements Nos. 71, 90, and 92, postretirement benefit costs, the controversy over accrual versus ''pay-as-you-go'' accounting, presents a more contentious issue. The requirement for submission of the board resolution or commission order evidences adoption of the accrual accounting provisions as required by Statement No, 106 and Interpretation No. 627 and for this reason, no change has been made to the final rule.

Comment. Interpretation No. 627 acknowledges that the transition obligation resulting from the adoption of Statement No. 106 may be deferred in accordance with the provisions of Statement No. 71 provided RUS approval is obtained. One commenter indicated that the Emerging Issues Task Force (EITF) in EITF No. 92–12, Accounting for OPEB Costs by Rate-Regulated Enterprises, limits the combined deferral-recovery period authorized by the regulator to approximately twenty years from the date of adoption of Statement No. 106. The commenter recommended that RUS refer to EITF 92–12 in its regulation and adopt its provision accordingly.

Response. Interpretations of generally accepted accounting principles are perpetually issued by the EITF and the AICPA. RUS has not, therefore, attempted to address each interpretation in its rulemakings unless RUS borrowers are specifically affected. Because all deferrals require RUS approval, RUS is able to monitor compliance with EITF 92–12 at the approval stage and it is not RUS's intention to approve a deferral that will conflict with the interpretation. For this reason, no revision was made to the final rule.

Comment. Interpretation No. 627 provides journal entries for the various events associated with postretirement benefits. Included among the events journalized is a borrower's voluntary funding of its postretirement benefit obligation. The journal entry prescribes a debit to Account 228.3X, Accumulated Provision for Pensions and Benefits—Funded, and a credit to Account 131.1, Cash—General. One commenter agreed with the journal entry provided that the funds were placed in an external, irrevocable trust. The commenter further proffered that if the borrower is merely segregating funds to be used to pay obligations in the future, reducing the postretirement benefit obligation is inappropriate.

Response. RUS agrees with the commenter and has revised the final rule to reflect two journal entries—one reflecting funding into an external, irrevocable trust and a second reflecting a segregation of funds.

Interpretation No. 629, Investments in Debt and Equity Securities

Comment. Several commenters specifically agreed with the accounting set forth in Interpretation No. 629; however, three commenters suggested that RUS address unrealized gains and losses on available-for-sale securities held as part of a decommissioning fund. Specifically, the commenters recommended that such gains and losses should increase or decrease the reported value of the fund.

Response. The accounting for nuclear decommissioning costs and their funding has long been an issue of debate and is currently being reviewed by the Federal Energy Regulatory Commission and the Financial Accounting Standards Board. It was RUS's intention not to address this subject matter in any forum until such time as a consensus was drawn. However, based upon the public belief that addressing available-for-sale securities held in a nuclear decommissioning fund will clarify this interpretation, RUS has revised Interpretation No. 629 to require unrealized holding gains and losses to increase or decrease, as appropriate, the reported value of the decommissioning fund.

List of Subjects in 7 CFR Part 1767

Electric power, Loan programs-energy, Rural areas, Uniform System of Accounts.

For the reasons set out in the preamble, RUS hereby amends 7 CFR chapter XVII as follows:

PART 1767—ACCOUNTING REQUIREMENTS FOR RUS ELECTRIC BORROWERS

1. The authority citation for part 1767 continues to read as follows:

Authority: 7 U.S.C. 901 *et seq.*; 7 U.S.C. 1921 *et seq.*; Pub. L. 103–354, 108 Stat. 3178 (7 U.S.C. 6941 *et seq.*).

2. Section 1767.13 is amended by revising paragraphs (a), (c) introductory text, and (d) to read as follows:

§ 1767.13 Departures from the prescribed RUS Uniform System of Accounts.

(a) No departures are to be made to the prescribed RUS USoA without the prior written approval of RUS. Requests for departures from the RUS USoA shall be addressed, in writing, to the Director, Borrower Accounting Division (BAD).

* * * * *

(c) If any state regulatory authority with jurisdiction over an RUS borrower prescribes accounting methods or principles for the borrower that are inconsistent with the provisions of this part, the borrower must immediately notify the Director, BAD, and provide such documents, information, and reports as RUS may request to evaluate the impact that such accounting methods or principles may have on the interests of RUS.

* * * * *

(d) RUS borrowers will not implement the provisions of Statement of Financial Accounting Standards (SFAS) No. 71, Accounting for the Effects of Certain Types of Regulation, SFAS No. 90, Regulated Enterprises—Accounting for Abandonments and Disallowances of Plant Costs, SFAS No. 92, Regulated Enterprises—Accounting for Phase-in Plans, without the prior written approval of RUS. Requests for approval shall be addressed, in writing, to the Director, BAD.

* * * * *

3. Section 1767.14 is revised to read as follows:

§ 1767.14 Interpretations of the RUS Uniform System of Accounts.

To maintain uniformity in accounting, borrowers must submit questions concerning interpretations of the RUS USoA, in writing, to the Director, BAD, for consideration and decision.

(Approved by the Office of Management and Budget under control number 0572–0002)

4–6. In § 1767.18, make the following changes:

a. In the table of contents listing under ''Other Property and Investments'', entries for Accounts 123.3, 123.4, 124.1, 124.2 are added in numerical order.

b. In the table of contents listing under ''Current and Accrued Assets'', the entry for Account 131.12 is put in numerical order and entries for Accounts 131.13 and 131.14 are added in numerical order.

c. Paragraph C. of Account 123 is revised, and Account 123.3, Investment in Associated Organizations-Federal Economic Development Loans, and Account 123.4, Investment in Associated Organizations-Non-Federal Economic Development Loans, are added in numerical order.

The additions and revision read as follows:

1767.18 *Assets and other debits.*

* * * * *

Assets and Other Debits

* * * * *

Other Property and Investments

* * * * *

123.3 Investment in Associated Organizations—Federal Economic Development Loans

123.4 Investment in Associated Organizations—Non-Federal Economic Development Loans

* * * * *

124.1 Other Investments—Federal Economic Development Loans

124.2 Other Investments—Non-Federal Economic Development Loans

* * * * *

Current and Accrued Assets

* * * * *

131.13 Cash—General—Economic Development Grant Funds

131.14 Cash—General—Economic Development Non-Federal Revolving Funds

* * * * *

123 *Investment in Associated Companies*

* * * * *

C. Account 123 shall be subaccounted as follows:

123.1 Patronage Capital from Associated Cooperatives

123.3 Investment in Associated Organizations—Federal Economic Development Loans

123.4 Investment in Associated Organizations—Non-Federal Economic Development Loans

123.11 Investment in Subsidiary Companies
123.21 Subscriptions to Capital Term Certificates—Supplemental Financing
123.22 Investment in Capital Term Certificates—Supplemental Financing
123.23 Other Investments in Associated Organizations

* * * * *

123.3 *Investment in Associated Organizations—Federal Economic Development Loans*

This account shall include investment advances of Federal funds received from a Rural Economic Development Grant to associated organizations for authorized rural economic development projects.

123.4 *Investment in Associated Organizations—Non-Federal Economic Development Loans*

This account shall include investment advances of non-Federal funds from the Rural Economic Development Grant revolving fund to associated organizations for authorized rural economic development projects.

* * * * *

7. In 1767.18, paragraph C of Account 124 is added preceeding Note A, and Account 124.1, Other Investments—Federal Economic Development Loans, and Account 124.2, Other Investments—Non-Federal Economic Development, are added to read as follows:

* * * * *

124 *Other Investments*

* * * * *

C. Account 124 shall be subaccounted as follows:

124.1 Other Investments—Federal Economic Development Loans
124.2 Other Investments—Non-Federal Economic Development Loans

* * * * *

124.1 *Other Investments—Federal Economic Development Loans*

This account shall include investment advances of Federal funds received from a Rural Economic Development Grant to nonassociated organizations for authorized rural economic development projects.

124.2 *Other Investments—Non-Federal Economic Development Loans*

This account shall include investment advances of non-Federal funds from the Rural Economic Development Grant revolving fund to nonassociated organizations for authorized rural economic development projects.

* * * * *

8. In § 1767.18, paragraph B of Account 131 is revised, Account 131.12 is put in numerical order, and Account 131.13, Cash—General—Economic Development Grant Funds, and Account 131.14, Cash—General—Economic Development Non-Federal Revolving Funds, are added in numerical order to read as follows:

* * * * *

131 *Cash*

* * * * *

B. Account 131 shall be subaccounted as follows:

131.1 Cash—General
131.2 Cash—Construction Fund—Trustee
131.3 Cash—Installation Loan and Collection Fund
131.4 Transfer of Cash
131.12 Cash—General—Economic Development Loan Funds
131.13 Cash—General—Economic Development Grant Funds
131.14 Cash—General—Economic Development Non-Federal Revolving Funds

* * * * *

131.13 *Cash—General—Economic Development Grant Funds*

This account shall include cash received from the Rural Utilities Service for Rural Economic Development Grants. Economic development grant funds shall be charged to this account and credited to Account 224.18, Other Long-Term Debt—Grant Funds; Account 208, Donated Capital; or Account 421, Miscellaneous Nonoperating Income, as appropriate. This account shall be credited and either Account 123.3, Investment in Associated Organizations—Federal Economic Development Loans, or Account 124.1, Other Investments—Federal Economic Development Loans, shall be debited, as appropriate, with the amount of an economic development revolving fund loan.

131.14 *Cash—General—Economic Development Non-Federal Revolving Funds*

This account shall include all non-Federal funds comprising the economic development revolving fund. It shall include all funds supplied by the borrower as well as all cash received from the repayment of loans made from the economic development revolving fund. This account shall be credited and either Account 123.4, Investment in Associated Organizations—Non-Federal Economic Development Loans, or Account 124.2, Other Investments—Non-Federal Economic Development Loans, shall be debited, as appropriate, with the amount of an economic development revolving fund loan.

* * * * *

9. In § 1767.19, in the table of contents listing under ''Margins and Equities'', an entry for Account 215.1 is added in numerical order and Account 215.1 is added to read as follows:

§ 1767.19 Liabilities and other credits.

* * * * *

Liabilities and Other Credits

Margins and Equities

* * * * *

215.1 Unrealized Gains and Losses—Debt and Equity Securities

* * * * *

215.1 *Unrealized Gains and Losses—Debt and Equity Securities*

This account shall include the unrealized holding gains and losses for available-for-sale securities.

* * * * *

10—15. In § 1767.41, make the following changes:

a. In the Numerical Index, the entries Interpretation No. 136, Storm Damage; Interpretation No. 628, Postemployment Benefits; and Interpretation No. 629, Investments in Debt and Equity Securities, are added in numerical order.

b. In the Subject Matter Index listing under ''D'', an entry for ''Debt Securities—Investments in,'' is added in alphabetical order.

c. In the Subject Matter Index listing under ''E'', an entry for ''Equity Securities—Investments in,'' is added in alphabetical order.

d. In the Subject Matter Index listing under ''I'', an entry for ''Investments in Debt and Equity Securities,'' is added in alphabetical order.

e. In the Subject Matter Index listing under ''P'', an entry for ''Postemployment Benefits,'' is added in alphabetical order.

f. In the Subject Matter Index listing under ''S'', an entry for ''Securities—Investments in Debt and Equity,'' and an entry for ''Storm Damage,'' are added in alphabetical order.

g. The entry Interpretation No. 136 is added. The additions read as follows:

§ 1767.41 Accounting methods and procedures required of all RUS borrowers.

* * * * *

NUMERICAL INDEX

Number	Title
*	* * * *
136	Storm Damage.
*	* * * *
628	Postemployment Benefits.
629	Investments in Debt and Equity Securities.

SUBJECT MATTER INDEX

	Number
* * * * *	
D	
* * * * *	
Debt Securities—Investments in	629
* * * * *	
E	
* * * * *	
Equity Securities—Investments in	629
* * * * *	
I	
* * * * *	
Investments in Debt and Equity Securities.	629
* * * * *	
P	
* * * * *	
Postemployment Benefits	628
* * * * *	
S	
* * * * *	
Securities—Investments in Debt and Equity.	136
* * * * *	
Storm Damage	136
* * * * *	

136 *Storm Damage*

As a result of recent hurricane, flood, and ice storm damage, the Rural Utilities Service (RUS) has received several inquiries concerning the proper accounting for storm damage costs and the associated funds received from the Federal Emergency Management Administration (FEMA).

Storm damage costs should be accounted for under the work order procedure. Units of property destroyed or otherwise removed from service must be reflected on retirement work orders and units of property installed must be shown on construction work orders. To ensure that the accounting for construction and retirement costs is as accurate as possible, an effort should be made to accurately accumulate material, labor, and overhead costs. Even when extreme care has been exercised, however, it may still be necessary to use estimates to develop the appropriate cost figures.

When a storm occurs, a utility typically incurs a large retirement loss, all or a part of which should be charged to the accumulated provision for depreciation. Storm damage costs over and above construction and retirement costs represent maintenance expense. Maintenance costs include the costs of resagging lines, straightening poles, and replacing minor items of property. When extensive damage has occurred, the need to restore the property to an operating condition without delay usually results in excessive costs being incurred. Standard property unit costs may be used as a guide in determining the amount to be capitalized. It should be noted, however, that when standard property unit costs are used, all excess costs are charged to maintenance expense.

Because of the storm's destruction, property is retired prematurely and as a result, extraordinary retirement losses occur. When such extraordinary losses occur, they should be recorded in the year in which the losses are incurred. If the recording of such losses will materially distort the income statement, such losses may be charged to Account 435, Extraordinary Deductions. These costs may be deferred and amortized to future periods only if the provisions of Statement of Financial Accounting Standards No. 71, Accounting for the Effects of Certain Types of Regulation (Statement No. 71), are applied. Under the provisions of Statement No. 71, a utility may defer certain costs, provided such costs are included in the utility's rate base and recovered through future rates. If an RUS borrower elects to apply the provisions of Statement No. 71, RUS approval is required. To obtain RUS approval, a borrower must submit:

a. A detailed description of the plan including the nature of the expense item, the amount of the deferral, the specific time period for rate recovery, and justifying support for the time period selected;

b. The accounting journal entries being used by the cooperative to record the expense deferral and amortization of the deferred costs;

c. A copy of the state Commission order authorizing recovery of the deferred costs through future rates, or in the absence of commission jurisdiction, a resolution from the cooperative's board of directors authorizing such recovery; and

d. A statement from the borrower's certified public accountant (CPA) or CPA firm indicating that the deferral and amortization of these costs is in accordance with generally accepted accounting principles.

To assist in the restoration of the damaged facilities, the Federal government often provides assistance through FEMA. Under current FEMA procedures, FEMA provides funds for the restoration of facilities based upon the cost estimates submitted by the entity requesting assistance. If the FEMA grant is for less than 100 percent of the cost estimates, FEMA does not specify which costs are to be reimbursed. When the funds are received, therefore, they should be accounted for by crediting construction, retirement, maintenance expense, and administrative expense in direct proportion to the total costs incurred. For example, if total storm damage costs are $1,000,000 with $450,000 incurred for maintenance, $300,000 for retirement, $200,000 for construction, and $50,000 for administrative costs, the FEMA reimbursement should be accounted for by applying 45 percent of the funds received as a credit to maintenance expense, 30 percent as a credit to retirement costs, 20 percent as a credit to construction, and 5 percent as a credit to administrative and general costs.

Accounting Journal Entries

Dr. 108.8X, Retirement Work in Progress—Storm Damage	$1,015.17	
Cr. 107.4, Construction Work in Progress—Storm Damage	.....	$1,015.17

To transfer the removal costs recorded in Column 11 of Retirement Work Order #4401X to Account 108.8X.

Dr. 107.4, Construction Work in Progress—Storm Damage	$4,141.55	
Cr. 108.8X, Retirement Work in Progress—Storm Damage	.....	$4,141.55

To remove material salvaged in the _____ rebuild from Account 107.4. The original entry debited Account 154, Plant Materials and Operating Supplies, and credited Account 107.4. (See Column 12 of Retirement Work Order #4401X.)

Dr. 108.8X, Retirement Work in Progress—Storm Damage	$312,230.41

Cr. 364, Poles Towers and Fixtures		$133,377.55
Cr. 365, Overhead Conductors and Devices		59,683.08
Cr. 368, Lines Transformers		19,704.60
Cr. 369, Services		97,651.23
Cr. 373, Street Lighting and Signal Systems		1,813.95

To remove the original cost of property destroyed and retired from the classified plant accounts. This retirement is recorded, in detail, on Retirement Work Order #4401X. It is understood that this retirement covers all distribution property retired or destroyed in the _____ area exclusive of substations and special equipment items (meters, meter sockets, current and potential transformers, transformers, voltage regulators, oil circuit reclosers (OCR), and sectionalizers).

Dr. 108.6, Accumulated Provision for Depreciation of Distribution Plant	$309,104.03	
Cr. 108.8X, Retirement Work in Progress—Storm Damage		$309,104.03

To record the net loss due to the retirement of distribution lines in the _____ area. (See Retirement Work Order #4401X.)

Dr. 364, Poles, Towers and Fixtures	$99,075.40	
Dr. 365, Overhead Conductors and Devices	104,142.22	
Dr. 368, Line Transformers	25,036.07	
Dr. 369, Services	28,865.08	
Dr. 373, Street Lighting and Signal Systems	2,101.60	
Cr. 107.4, Construction Work in Progress—Storm Damage		$259,220.37

To record, in the proper classified plant accounts, Construction Work Order #4401 covering the _____ rebuild.

This entry includes:

Material Issued	$150,336.49
Less: Materials Returned	15,631.39
Net Material Used	134,705.10
Labor and overhead estimated by using standard record unit costs	124,515.27
Total	259,220.37

Dr. 108.8X, Retirement Work in Progress—Storm Damage	2,384.00	
Cr. 107.4, Construction Work in Progress—Storm Damage		$2,384.00

To transfer the removal costs associated with the retirement of old transmission lines ($1,966) and substations ($418) to Account 107.4. This cost is shown in Column 11 of Retirement Work Order #4400X).

Dr. 107.4, Construction Work in Progress—Storm Damage	$1,939.74	
Cr. 108.8X, Retirement Work in Progress—Storm Damage		$1,939.74

To remove material salvaged from transmission lines ($1,545.74) and substations ($394.00) from Account 107.4. The original entry debited Account 154 and credited Account 107.4. (See Column 12 of Retirement Work Order #4400X.)

Dr. 108.8X, Retirement Work in Progress—Storm Damage	$162,172.06	
Cr. 355, Poles and Fixtures		$47,738.45
Cr. 356, Overhead Conductors & Devices		80,304.11
Cr. 362, Station Equipment		34,129.50

To remove the original cost of transmission lines and substations destroyed and retired from the classified plant accounts. (See Retirement Work Order #4400X.) (New substations were built and separately accounted for on Work Order #4406.)

Dr. 108.5, Accumulated Provision for Depreciation of Transmission Plant	$128,462.82	
Dr. 108.6, Accumulated Provision for Depreciation of Distribution Plant	34,153.50	
Cr. 108.8X, Retirement Work in Progress—Storm Damage		$162,616.32

To record the net loss due to the retirement of transmission lines ($128,462.82) and substations ($34,153.50). (See Retirement Work Order #4400X):

	Substations	Transmission plant
Original Cost	$34,129.50	$128,042.56
Add: Cost of Removal	418.00	1,966.00
	34,547.50	130,008.56
Less: Material Salvaged	394.00	1,545.74
Total	34,153.50	128,462.82

Dr. 355, Poles and Fixtures	$161,784.05	
Dr. 356, Overhead Conductors and Devices	124,704.77	
Cr. 107.4, Construction Work in Progress—Storm Damage		$286,488.82

To record, in the proper classified plant accounts, the costs of a 69 kV transmission line (_____) as detailed in Work Order #4400. This work order includes construction costs as follows:

Material Used (Net)	$171,665.62	
Labor and overhead estimated by using standard record unit costs	114,823.20	
Total	286,488.82	
Dr. 107.4, Construction Work in Progress—Storm Damage	$329.40	
Cr. 108.8X, Retirement Work in Progress—Storm Damage		$329.40

To correct the journal entry for cash received from the sale of scrapped meters and transformers. The original entry credited Account 107.4 at the time of receipt.

Transformers	$318.00	
Meters	11.40	
Net Materials Used	329.40	
Dr. 108.8X, Retirement Work in Progress—Storm Damage		$137,671.22
Cr. 365, Overhead Conductors and Devices		$4,557.00
Cr. 368, Line Transformers		112,815.22
Cr. 370, Meters		20,299.00

To remove the cost of meters, transformers, and OCRs lost or destroyed from the primary plant accounts. (See Retirement Work Order #4402X.)

737 Transformers	$112,815.22	
31 OCRs	4,557.00	
1,532 Meters	20,299.00	
Total	137,671.22	
Dr. 108.6, Accumulated Provision for Depreciation of Distribution Plant	$137,341.82	
Cr. 108.8X, Retirement Work in Progress		$137,341.82

To record the net loss due to the retirement of meters, transformers, and OCRs. (See Retirement Work Order #4402X.)

Original Cost	$137,671.22	
Salvaged Realized	329.40	
Total	137,341.82	
Dr. 186, Miscellaneous Deferred Debits	$1,319.85	
Cr. 107.4, Construction Work in Progress—Storm Damage		$1,319.85

To record the engineering costs associated with future construction work in the _____ area.

Dr. 593, Maintenance of Overhead Lines	$607.24	
Dr. 595, Maintenance of Line Transformers	19,365.86	
Dr. 597, Maintenance of Meters	6,595.56	
Cr. 107.4, Construction Work in Progress—Storm Damage		$26,568.66

To charge the costs of repairing damaged meters, transformers, voltage regulators, and OCRs to the appropriate expense accounts. Repair costs were originally charged to Account 107.4.

	593	595	597
Meters			$6,595.56
Transformers		$18,869.95	
Voltage Regulators		495.91	
Oil Circuit Reclosers	$607.24		
Total	607.24	19,365.86	6,595.56

Dr. 920, Administrative and General Salaries	$32,000.00	
Dr. 921, Office Supplies and Expenses	4,421.69	
Cr. 107.4, Construction Work in Progress—Storm Damage		$36,421.69

To charge the administrative costs incurred to obtain the FEMA grant to the appropriate expense accounts. Administrative costs were originally charged to Account 107.4.

Salaries	$32,000.00	
Office Supplies	4,421.69	
Total	$36,421.69	
Dr. 571, Maintenance of Overhead Lines	$3,675.60	
Dr. 593, Maintenance of Overhead Lines	33,080.40	
Cr. 107.4, Construction Work in Progress Storm Damage		$36,756.00

To allocate expenses remaining in Account 107.4 to distribution and transmission maintenance expense. It was estimated that only 10 percent is applicable to transmission.

Dr. 426.5, Other Deductions	$275,000.00	

Dr. 435, Extraordinary Deductions		
Dr. 182.1, Extraordinary Property Losses		
Cr. 108.5, Accumulated Provision for Depreciation of Transmission Plant		$35,000.00
Cr. 108.6, Accumulated Provision for Depreciation of Distribution Plant		240,000.00

To restore the accumulated provisions for depreciation to their appropriate levels based upon a study of plant currently in service.

Note: Account 426.5, Other Deductions, should be used to record the retirement loss as a current period expense. Account 435, Extraordinary Deductions, may be used when the loss will materially distort the income statement. Account 182.1, Extraordinary Property Losses, should be used when such costs are being deferred under the provisions of Statement No. 71. Costs recorded in this account should be amortized to Account 407, Amortization of Property Losses, as the costs are recovered through rates.

Dr. 131.1, Cash—General	$1,000,000.00	
Cr. 253, Other Deferred Credits		$1,000,000.00

To record the receipt of funds from the Federal Emergency Management Administration (FEMA).

Dr. 253, Other Deferred Credits	$1,000,000.00	
Cr. 108.5, Accumulated Provision for Depreciation of Transmission Plant		$74,205.00
Cr. 108.6, Accumulated Provision for Depreciation of Distribution Plant		191,575.00
Cr. 186, Miscellaneous Deferred Debits		872.00
Cr. 355, Poles and Fixtures		129,056.00
Cr. 356, Overhead Conductors and Devices		99,408.00
Cr. 364, Poles, Towers and Fixtures		78,916.00
Cr. 365, Overhead Conductors and Devices		82,840.00
Cr. 368, Line Transformers		20,056.00
Cr. 369, Services		23,108.00
Cr. 373, Street Lighting and Signal Systems		1,744.00
Cr. 426.5, Other Deductions		219,220.00
Cr. 571, Maintenance of Overhead Lines		2,900.00
Cr. 593, Maintenance of Overhead Lines		26,600.00
Cr. 595, Maintenance of Line Transformers		15,300.00
Cr. 597, Maintenance of Meters		5,200.00
Cr. 920, Administrative and General Salaries		25,491.00
Cr. 921, Office Supplies and Expenses		3,509.00

To allocate FEMA funds to the proper accounts.

Summary of Costs

Maintenance:	
Account 571, Maintenance of Overhead Lines	$3,675.60
Account 593, Maintenance of Overhead Lines	33,687.24
Account 595, Maintenance of Line Transformers	19,365.86
Account 597, Maintenance of Meters	6,595.56
Total Maintenance Costs	63,324.26
Retirement Loss:	
Account 108.5, Accumulated Provision for Depreciation of Transmission Plant	93,462.82
Account 108.6, Accumulated Provision for Depreciation of Distribution Plant	240,599.35
Account 426.5, Other Deductions	275,000.00
Total Retirement Loss	609,062.17
Construction:	
Account 186, Miscellaneous Deferred Debits	1,319.85
Account 355, Poles and Fixtures	161,784.05
Account 356, Overhead Conductors and Devices	124,704.77
Account 364, Poles, Towers and Fixtures	99,075.40
Account 365, Overhead Conductor and Devices	104,142.22
Account 368, Line Transformers	25,036.07
Account 369, Services	28,865.08
Account 373, Street Lighting and Signal Systems	2,101.60
Total Construction Cost	547,029.04
Administrative:	
Account 920, Administrative and General Salaries	$32,000.00
Account 921, Office Supplies and Expenses	4,421.69
Total Administrative Cost	36,421.69
Maintenance	63,324.26
Retirement Loss	609,062.17
Construction	547,029.04
Administrative	36,421.69
Total Costs	1,255,837.16

Distribution of FEMA Funds

Maintenance: 63,324.26÷1,255,837.16=.0504=5.0%
Retirement: 609,062.17÷1,255,837.16=.4850=48.5%
Construction: 547,029.04÷1,255,837.16=.4356=43.6%
Administrative: 36,421.69÷1,255,837.16=.0290=2.9%

Maintenance: $1,000,000.00×5.0%=	$50,000.00
Retirement: $1,000,000.00×48.5%=	485,000.00
Construction: $1,000,000.00×43.6%=	436,000.00
Administrative: $1,000,000.00×2.9%=	29,000.00
Total	1,000,000.00

Distribution of FEMA Funds—Maintenance

Account 571: 3,675.60÷63,324.26=.0580=5.8%
Account 593: 33,687.24÷63,324.26=.5320=53.2%
Account 595: 19,365.86÷63,324.26=.3058=30.6%
Account 597: 6,595.56÷63,324.26=.1041=10.4%

Account 571: $50,000.00×5.8%=	$2,900.00
Account 593: $50,000.00×53.2%=	26,600.00
Account 595: $50,000.00×30.6%=	15,300.00
Account 597: $50,000.00×10.4%=	5,200.00
Total	50,000.00

Distribution of FEMA Funds—Retirement Loss

Account 108.5: 93,462.82÷609,062.17=.1535=15.3%
Account 108.6: 240,599.35÷609,062.17=.3950=39.5%
Account 426.5: 275,000.00÷609,062.17=.4515=45.2%

Account 108.5: $485,000.00×15.3%=	$74,205.00
Account 108.6: $485,000.00×39.5%=	191,575.00
Account 426.5: $485,000.00×45.2%=	219,220.00
Total	485,000.00

Distribution of FEMA Funds—Construction

Account 186: 1,319.85÷547,029.04=.0024=.2%
Account 355: 161,784.05÷547,029.04=.2958=29.6%
Account 356: 124,704.77÷547,029.04=.2280=22.8%
Account 364: 99,075.40÷547,029.04=.1811=18.1%
Account 365: 104,142.22÷547,029.04=.1904=19.0%
Account 368: 25,036.07÷547,029.04=.0457=4.6%
Account 369: 28,865.08÷547,029.04=.0528=5.3%
Account 373: 2,101.67÷547,029.04=.0038=.4%

Account 186: $436,000.00×.2%=	$872.00
Account 355: $436,000.00×29.6%=	129,056.00
Account 356: $436,000.00×22.8%=	99,408.00
Account 364: $436,000.00×18.1%=	78,916.00
Account 365: $436,000.00×19.0%=	82,840.00
Account 368: $436,000.00×4.6%=	20,056.00
Account 369: $436,000.00×5.3%=	23,108.00
Account 373: $436,000.00×.4%=	1,744.00
Total	436,000.00

Distribution of FEMA Funds—Administrative

Account 920: 32,000.00÷36,421.69=.8786=87.9%
Account 921: 4,421.69÷36,421.69=.1213=12.1%

Account 920: $29,000.00×87.9%=	$25,491.00
Account 921: $29,000.00×12.1%=	3,509.00
Total	29,000.00

* * * * *

16. In § 1767.41, Interpretation No. 401 is revised to read as follows:

* * * * *

401 *Computer Software Costs*

Computer software consists of programs and routines (sets of computer instructions) which direct the operation of the computer. Software may refer to generalized routines useful in computer operations or to programs for specific applications such as payroll.

The distinction between generalized software and application software is important. Generalized software provides operating support for individual applications. This would include programs for such tasks as

making printouts of machine-readable records, sorting records, organizing and maintaining files, translating programs written in a symbolic language into machine-language instructions, and scheduling jobs through the computer. These programs are generally furnished by the manufacturer.

Application software consists of a set of instructions for performing a particular data processing task. Application programs are generally written by the user installation, but are frequently obtained as prewritten packages from software vendors. Application software includes programs such as payroll, billing, general ledger, as well as engineering or managerial applications.

Costs incurred with the purchase or development of computer software shall be accounted for as follows:

1. Capitalize in a subaccount of Account 391, Office Furniture and Equipment, all costs for generalized software. Depreciate the cost over the service life (or remaining life) of the main hardware (i.e., containing central processor). If the purchase invoice does not break out or assign a cost to the ''generalized software,'' it is appropriate to include the full amount in hardware costs. Capitalize in a separate subaccount of Account 391, all costs for applications software determined to have a service life of over one year. Depreciate the cost over the estimated useful service life of the program. This depreciation period shall not exceed five (5) years. RUS realizes, however, that there may be circumstances that justify a useful life longer than 5 years. When this is the case and it is management's intent to utilize these programs over an extended period, written justification shall be submitted to RUS for approval.

2. Expense in Account 921, Office Supplies and Expenses, in the period incurred, all costs associated with the maintenance, updating, and conversion of files or revision of all software, and all costs for software with a useful life of less than 1 year. Also expense in Account 921, the unamortized cost of all software determined, during the year, to be no longer used by or useful to the cooperative. Such costs that are clearly applicable to any category of operating expenses other than the administrative and general category, however, shall be included in the appropriate account in such category. In accordance with the USoA, no portion of such costs shall be capitalized to construction or retirement activities.

In determining the total cost of purchased or internally developed software, the following items shall be included:

a. Costs incurred for feasibility studies if they result in the purchase or development of software;

b. All costs related to the actual purchase or development of the software. These costs must be specifically identifiable with the software and properly supported by time cards, invoices, or other documents; and

c. All costs incurred in ''testing and debugging'' the software.

Computer software costs are properly chargeable to Account 107, Construction Work in Progress, provided that the following criteria are met:

1. The computer program is specifically dedicated to performing a construction related activity, and

2. The cost of the software is itemized separate and apart from other hardware and software costs.

The cost of software programs meeting the above requirements and having an estimated useful service life in excess of 1 year shall be recorded in Account 186, Miscellaneous Deferred Debits, and amortized to Account 107, Construction Work in Progress, over the estimated service life of the program not to exceed 5 years.

All costs related to training personnel in the use of software shall be expensed as incurred.

The accounting in this section is not intended to apply to immaterial amounts. When it is deemed that the costs of the recordkeeping necessary to amortize these costs outweigh the benefits to the members, software costs shall be expensed in the year incurred.

For computer costs relating to load control equipment, refer to Item 118 of this section.

* * * * *

17. In § 1767.41, Interpretation No. 604 is revised to read as follows:

* * * * *

604 *Deferred Compensation*

Many utilities participate in the NRECA Deferred Compensation Program. Based upon the provisions of the program, the following accounting entries shall be made:

Dr. 186.XX, Miscellaneous Deferred Debits—Deferred Compensation
Cr. 228.3, Accumulated Provision for Pensions and Benefits

To increase the deferred compensation provision by the amount of the annual deposit to NRECA's Deferred Compensation Fund.

Dr. 128, Other Special Funds—Deferred Compensation
Cr. 131.1, Cash—General

To record the annual deposit to NRECA's Deferred Compensation Fund.

Dr. Construction Work in Progress, Retirement Work in Progress, or Account 926, Employee Pensions and Benefits, as appropriate.
Cr. 186.XX, Miscellaneous Deferred Debits—Deferred Compensation

To record monthly accrual of deferred compensation.

Note: If an employee joins the deferred compensation program during the year, use entry #1 to record the additional deposit to the NRECA Deferred Compensation Fund and increase the monthly accrual in entry #2 to reflect this deposit.

NRECA provides borrowers that participate in the deferred compensation program with an annual account statement disclosing the activity for each Homestead Fund investment including the number of shares owned, interest income, dividend income, capital gains/losses, and the value of the shares owned at statement date. Funds may be invested in the Short-term Bond Fund, the Value Fund, the Short-term Government Securities Fund, and the Daily Income Fund. Depending upon the Homestead Fund selected, invested funds may earn interest and dividend income and may experience unrealized holding gains or losses. Based upon the information provided on the annual statement, the following journal entries shall be recorded to recognize the increase or decrease in the fund assets:

Dr. 128, Other Special Funds—Deferred Compensation
Cr. 419, Interest and Dividend Income
Cr. 421, Miscellaneous Nonoperating Income

To record an increase in the fund value as of December 31, 19xx, resulting from interest and dividend income and from unrecognized holding gains on trading securities.

Dr. 926, Employee Pensions and Benefits
Cr. 228.3, Accumulated Provision for Pensions and Benefits

To record an increase in the liability to the employee resulting from an increase in the investment account.

Dr. 426.5, Other Deductions
Cr. 128, Other Special Funds—Deferred Compensation To record a decrease in fund value as of December 31, 19xx, resulting from unrecognized holding losses on trading securities.

Dr. 228.3, Accumulated Provision for Pensions and Benefits
Cr. 926, Employee Pensions and Benefits

To record a decrease in the liability to the employee resulting from a decrease in the investment account.

Payments made to participating employees because of retirement or separation for other reasons shall be recorded using the following entries:

Dr. 131.1, Cash—General
Cr. 128, Other Special Funds—Deferred Compensation

To record the receipt of funds from NRECA.

and

Dr. 228.3, Accumulated Provision for Pensions and Benefits
Cr. 131.1, Cash—General

To record payment to employee for deferred compensation.

If the borrower has elected to bear the market risk of the funds which guarantee that the amount of money an employee receives will not be less than the amount of salary deferred, the following entry shall be recorded if total payment(s) from NRECA are less than the amount of salary deferred:

Dr. 926, Employee Pensions and Benefits
Cr. 131.1, Cash—General

To record payment to employee for deferred compensation. Payment was made because amount returned did not equal salary deferred.

Appropriate disclosure of the terms of the program shall be made in the notes to the financial statements.

* * * * *

18. In § 1767.41, Interpretation No. 626 is revised to read as follows:

* * * * *

626 *Rural Economic Development Loan and Grant Program*

On December 21, 1987, Section 313, Cushion of Credits Payments Program, was added to the Rural Electrification Act. Section 313 establishes a Rural Economic Development Subaccount and authorizes the Administrator of the Rural Utilities Service to provide zero interest loans or grants to RE Act borrowers for the purpose of promoting rural economic development and job creation projects.

Subpart B, Rural Economic Development Loan and Grant Program, 7 CFR Part 1703, sets forth the policies and procedures relating to the zero interest loan program and for approving and administering grants.

The accounting journal entries required to record the transactions associated with a rural economic development loan are as follows:

Dr. 224.17, RUS Notes Executed—Economic Development—Debit
Cr. 224.16, Long-Term Debt—RUS Economic Development Notes Executed

To record the contractual obligation to RUS for the Economic Development Notes.

Dr. 131.12, Cash—General—Economic Development Funds
Cr. 224.17, RUS Notes Executed—Economic Development—Debit

To record the receipt of the economic development loan funds.

Dr. 123, Investment in Associated Organizations or
Dr. 124, Other Investments
Cr. 131.12, Cash—General—Economic Development Funds

To record the disbursement of Economic development loan funds to the project.

Dr. 131.1, Cash—General Funds
Cr. 421, Miscellaneous Nonoperating Income

To record payment received from the project for loan servicing charges.

Dr. 171, Interest and Dividends Receivable
Cr. 419, Interest and Dividend Income

To record the interest earned on the investment of rural economic development loan funds.

Dr. 426.1, Donations or
Dr. 426.5, Other Deductions
Cr. 131.1, Cash—General Funds

To record the payment of interest earned in excess of $500.00 on the investment of rural economic development loan funds.

Note: Interest earned in excess of $500.00 must be used for the rural economic development project for which the loan funds were received or returned to RUS.

Dr. 131.12, Cash—General—Economic Development Funds
Cr. 123, Investment in Associated Organizations or
Cr. 124, Other Investments

To record receipt of the repayment, by the project, of economic development loan funds.

Dr. 224.16, Long-Term Debt—RUS Economic Development Notes Executed
Cr. 131.12, Cash—General—Economic Development Funds

To record the repayment, to RUS, of the economic development loan funds.

The accounting journal entries required to record the transactions associated with a rural economic development grant are as follows:

Dr. 131.13, Cash—General—Economic Development Grant Funds
Cr. 224.18, Other Long-Term Debt—Grant Funds;
Cr. 208, Donated Capital; or
Cr. 421, Miscellaneous Nonoperating Income

To record grant funds disbursed by RUS. If the grant agreement requires repayment of the funds upon termination of the revolving loan program, Account 224.18 should be credited. If the grant agreement states that there is absolutely no obligation for repayment upon termination of the revolving loan program, the funds should be accounted for as a permanent infusion of capital by crediting Account 208. If, however, the grant agreement is silent as to the final disposition of the grant funds, Account 421 should be credited.

Dr. 123.3, Investment in Associated Organizations—Federal Economic Development Loans
Cr. 131.13, Cash—General—Economic Development Grant Funds

To record advances of Federal funds to associated organizations for authorized rural economic development projects.

Dr. 124.1, Other Investments—Federal Economic Development Loans
Cr. 131.13, Cash—General—Economic Development Grant Funds

To record advances of Federal funds to nonassociated organizations for authorized rural economic development projects.

Dr. 171, Interest and Dividends Receivable
Cr. 419, Interest and Dividend Income

To record the accrual of interest on loans made to associated and nonassociated organizations with Federal funds for authorized rural economic development projects.

Dr. 131.14, Cash—General—Economic Development Non-Federal Revolving Funds
Cr. 123.3, Investment in Associated Organizations—Federal Economic Development Loans or
Cr. 124.1, Other Investments—Federal Economic Development Loans

To record repayment of loans made with Federal funds.

Dr. 123.4, Investment in Associated Organizations—Non-Federal Economic Development Loans
Cr. 131.14, Cash—General—Economic Development Non-Federal Revolving Funds

To record advances of non-Federal funds to associated organizations for authorized rural economic development projects.

Dr. 124.2, Other Investments—Non-Federal Economic Development Loans
Cr. 131.14, Cash—General—Economic

Development Non-Federal Revolving Funds

To record advances of non-Federal funds to nonassociated organizations for authorized rural economic development projects.

Dr. 171, Interest and Dividends Receivable

Cr. 419, Interest and Dividend Income

To record the accrual of interest on loans made to associated and nonassociated organizations with non-Federal funds for authorized rural economic development projects.

Dr. 131.14, Cash—General—Economic Development Non-Federal Revolving Funds

Cr. 123.4, Investment in Associated Organizations—Non-Federal Economic Development Loans or

Cr. 124.2, Other Investments—Non-Federal Economic Development Loans

To record repayment of loans made with non-Federal funds.

* * * * *

19. In § 1767.41, Interpretation No. 627 is revised, and Interpretation No. 628, Postemployment Benefits, and Interpretation No. 629, Investments in Debt and Equity Securities, are added to read as follows:

* * * * *

627 *Postretirement Benefits*

Statement of Financial Accounting Standards No. 106, Employers' Accounting for Postretirement Benefits Other than Pensions (Statement No. 106), requires reporting entities to accrue the expected cost of postretirement benefits during the years the employee provides service to the entity. For purposes of applying the provisions of Statement No. 106, members of the board of directors are considered to be employees of the cooperative. Prior to the issuance of Statement No. 106, most reporting entities accounted for postretirement benefit costs on a ''pay-as-you-go'' basis; that is, costs were recognized when paid, not when the employee provided service to the entity in exchange for the benefits.

As defined in Statement No. 106, a postretirement benefit plan is a deferred compensation arrangement in which an employer promises to exchange future benefits for an employee's current services. Postretirement benefit plans may be funded or unfunded. Postretirement benefits include, but are not limited to, health care, life insurance, tuition assistance, day care, legal services, and housing subsidies provided outside of a pension plan.

This statement applies to both written plans and to plans whose existence is implied from a practice of paying postretirement benefits. An employer's practice of providing postretirement benefits to selected employees under individual contracts with specified terms determined on an employee-by-employee basis does not, however, constitute a postretirement benefit plan under the provisions of this statement.

Postretirement benefit plans generally fall into three categories: single-employer defined benefit plans, multi-employer plans, and multiple-employer plans.

The accounting requirements set forth in this interpretation focus on single- and multiple-employer plans. The accounting requirements set forth in Statement No. 106 for multiemployer plans or defined contribution plans shall be adopted for borrowers electing those types of plans.

Under the provisions of Statement No. 106, there are two components of the postretirement benefit cost: the current period cost and the transition obligation. The transition obligation is a one-time accrual of the costs resulting from services already provided. Statement No. 106 allows the transition obligation to be deferred and amortized on a straight-line basis over the average remaining service period of the active employees. If the average remaining service life of the employees is less than 20 years, a 20-year amortization period may be used.

Accounting Requirements

All RUS borrowers must adopt the accrual accounting provisions and reporting requirements set forth in Statement No. 106. The transition obligation and accrual of the current period cost must be based upon an actuarial study. This study must be updated to allow the borrower to comply with the measurement date requirements of Statement No. 106; however, the study must, at a minimum, be updated every five years. RUS will not allow electric borrowers to account for postretirement benefits on a ''pay-as-you-go'' basis.

The deferral and amortization of the transition obligation does not require RUS approval provided that it complies with the provisions of Statement No. 106. If, however, a borrower elects to expense the transition obligation in the current period and subsequently defer this expense in accordance with Statement of Financial Accounting Standards No. 71, Accounting for the Effects of Certain Types of Regulation, the deferral must be approved by RUS. In those states in which the commission will not allow the recovery of the transition obligation through future rates, the transition obligation must be expensed, in its entirety, in the year in which Statement No. 106 is adopted. A portion of the transition obligation may be charged to construction and retirement activities provided such charges are properly supported.

Effective Date and Implementation

For plans outside the United States and for defined benefit plans of employers that (a) are nonpublic enterprises and (b) sponsor defined benefit postretirement plans with no more than 500 plan participants in the aggregate, Statement No. 106 is effective for fiscal years beginning after December 15, 1994. For all other plans, Statement No. 106 is effective for fiscal years beginning after December 15, 1992.

RUS borrowers must comply with the implementation dates set forth in Statement No. 106. At the time of the adoption of Statement No. 106, rates must be in place sufficient to recover the current period expense and any amortization of the transition obligation. A copy of a board resolution or commission order, as appropriate, indicating that the transition obligation and current period expense have been included in the borrower's rates must be submitted to RUS.

Accounting Journal Entries—Transition Obligation

The journal entries required to record the transition obligation are as follows:

1. If the borrower elects to expense the transition obligation in the current period and there is no deferral of costs, the following entry shall be recorded:

Dr. 435.1, Cumulative Effect on Prior Years of a Change in Accounting Principle or

Dr. 926, Employee Pensions and Benefits

Dr. 107, Construction Work in Progress

Dr. 108.8, Retirement Work in Progress

Cr. 228.3, Accumulated Provision for Pensions and Benefits

To record the current period recognition of the transition obligation for postretirement benefits.

Note: A portion of the transition obligation may be charged to construction and retirement activities provided such charges are properly supported.

2. If the borrower elects to defer and amortize the transition obligation in accordance with the provisions of Statement No. 71, the following entry shall be recorded:

Dr. 182.3, Other Regulatory Assets

Cr. 228.3, Accumulated Provision for Pensions and Benefits

To record the deferral of the transition obligation under the provisions of Statement No. 71.

Dr. 926, Employee Pensions and Benefits
Dr. 107, Construction Work in Progress
Dr. 108.8, Retirement Work in Progress
Cr. 182.3, Other Regulatory Assets

To record the amortization of postretirement benefits expenses as they are recovered through rates in accordance with Statement No. 71.

3. The deferral and amortization of the transition obligation under the provisions of Statement No. 106 is considered to be an off balance sheet item. If, therefore, the borrower elects to defer and amortize the transition obligation on a straight-line basis over the average remaining service period of the active employees or 20 years in accordance with Statement No. 106, no entry is required. Instead, the transition obligation is recognized as a component of postretirement benefit cost as it is amortized. It should be noted, however, that the amount of the unamortized transition obligation must be disclosed in the notes to the financial statements.

Accounting Journal Entries—Current Period Expense

The current period postretirement expense should be recorded by the following entry:

Dr. 926, Employee Pensions and Benefits
Dr. 107, Construction Work in Progress
Dr. 108.8, Retirement Work in Progress
Cr. 228.3, Accumulated Provision for Pensions and Benefits

To record current period postretirement benefit expense.

Dr. 228.3X, Accumulated Provision for Pensions and Benefits—Funded
Cr. 131.1, Cash—General

To record cash payments on a ''pay-as-you-go'' basis for postretirement benefits.

Accounting Journal Entry—Funding

If a borrower elects to voluntarily fund its postretirement benefits obligation in an external, irrevocable trust, the following entry shall be recorded:

Dr. 228.3X, Accumulated Provision for Pensions and Benefits—Funded
Cr. 131.1, Cash—General

To record the funding of postretirement benefits expense into an external, irrevocable trust.

If a borrower elects to voluntarily fund its postretirement benefits obligation in an investment vehicle other than an external, irrevocable trust, the following entry shall be recorded:

Dr. 128, Other Special Funds
Cr. 131.1, Cash—General

To record the funding of postretirement benefits expense into an investment vehicle other than an external, irrevocable trust.

628 *Postemployment Benefits*

Statement of Financial Accounting Standards No. 112, Employers' Accounting for Postemployment Benefits (Statement No. 112) establishes the standards of financial accounting and reporting for employers who provide benefits to former or inactive employees after employment but before retirement. Inactive employees are those who are not currently rendering service to the employer but who have not been terminated, including employees who are on disability leave, regardless of whether they are expected to return to active service. For purposes of applying the provisions of Statement No. 112, former members of the board of directors are considered to be employees of the cooperative.

Postemployment benefits include benefits provided to former or inactive employees, their beneficiaries, and covered dependents. They include, but are not limited to, salary continuation, supplemental benefits (including workmen's compensation), health care, job training and counseling, and life insurance coverage. Benefits may be provided in cash or in kind and may be paid upon cessation of active employment or over a specified period of time.

The cost of providing postemployment benefits is considered to be a part of the compensation provided to an employee in exchange for current service and should, therefore, be accrued as the employee earns the right to be paid for future postemployment benefits. Applying the criteria set forth in Statement of Financial Accounting Standards No. 43, Accounting for Compensated Absences, a postemployment benefit obligation is accrued when all of the following conditions are met:

1. The employer's obligation for payment for future absences is attributable to employees' services already performed;

2. The obligation relates to employee rights that vest or accumulate. Vested rights are considered those rights for which the employer is obligated to make payment even if the employee terminates. Rights that accumulate are those earned, but unused rights to compensated absences that may be carried forward to one or more periods subsequent to the period in which they are earned;

3. Payment of the compensation is probable; and

4. The amount can be reasonably estimated.

If all of these conditions are not met, the employer must account for its postemployment benefit obligation in accordance with Statement of Financial Accounting Standards No. 5, Accounting for Contingencies (Statement No. 5) when it becomes probable that a liability has been incurred and the amount of that liability can be reasonably estimated.

If an obligation for postemployment benefits is not accrued in accordance with the provisions of Statement No. 5 or Statement No. 43 only because the amount cannot be reasonably estimated, the financial statements should disclose that fact.

Accounting Requirements

All RUS borrowers must adopt the accrual accounting provisions and reporting requirements set forth in Statement No. 112 as of the statement's implementation date. A portion of the cumulative effect may be charged to construction and retirement activities provided such charges are properly supported. If a borrower elects to defer the cumulative effect of implementing Statement No. 112 in accordance with the provisions of Statement of Financial Accounting Standards No. 71, Accounting for the Effects of Certain Types of Regulation, the deferral must be approved by RUS.

Effective Date and Implementation

Statement No. 112 is effective for fiscal years beginning after December 15, 1993. Previously issued financial statements should not be restated.

RUS borrowers must comply with the implementation date set forth in Statement No. 112. At the time of the adoption of Statement No. 112, rates must be in place sufficient to recover the current period expense.

Accounting Journal Entries

The journal entries required to account for postemployment benefits are as follows:

Dr. 435.1, Cumulative Effect on Prior Years of a Change in Accounting Principle
Dr. 107, Construction Work in Progress
Dr. 108.8, Retirement Work in Progress
Cr. 228.3, Accumulated Provision for Pensions and Benefits

To record the cumulative effect of implementing Statement No. 112.

Note: A portion of the cumulative effect may be charged to construction and retirement activities provided such charges

are properly supported. Account 435.1 is closed to Account 219.2, Nonoperating Margins.

If the borrower elects to defer and amortize the cumulative effect in accordance with the provisions of Statement No. 71, the following entry shall be recorded:

Dr. 182.3, Other Regulatory Assets
Cr. 228.3, Accumulated Provision for Pensions and Benefits

To record the deferral of the cumulative effect of implementing Statement No. 112 in accordance with the provisions of Statement No. 71.

Dr. 926, Employee Pensions and Benefits
Dr. 107, Construction Work in Progress
Dr. 108.8, Retirement Work in Progress
Cr. 182.3, Other Regulatory Assets

To record the amortization of the cumulative effect of implementing Statement No. 112 as it is recovered through rates in accordance with Statement No. 71.

Dr. 926, Employee Pensions and Benefits
Dr. 107, Construction Work in Progress
Dr. 108.8, Retirement Work in Progress
Cr. 228.3, Accumulated Provision for Pensions and Benefits

To record current period postemployment benefit expense.

Note: If postemployment benefits are accrued under the criteria set forth in Statement No. 43, this journal entry is made on a monthly basis. If, however, the accrual is based upon the provisions of Statement No. 5, this is a one-time entry unless the liability is reevaluated and subsequently adjusted.

629 *Investments in Debt and Equity Securities*

Statement of Financial Accounting Standards No. 115, Accounting for Certain Investments in Debt and Equity Securities (Statement No. 115), establishes the standards of financial accounting and reporting for investments in debt securities and for investments in equity securities that have readily determinable fair values. Statement No. 115 does not apply to investments in equity securities accounted for under the equity method nor to investments in consolidated subsidiaries.

At the time of acquisition, an entity must classify debt and equity securities into one of three categories: held-to-maturity, available-for-sale, or trading. At the balance sheet date, the appropriateness of the classifications must be reassessed.

Investments in debt securities are classified as held-to-maturity and are measured at amortized cost in the balance sheet only if the reporting entity has the positive intent and ability to hold these securities to maturity. Debt securities are not classified as held-to-maturity if the entity has the intent to hold the security only for an indefinite period; for example, if the security would become available for sale in response to changes in market interest rates and related changes in the security's prepayment risk, needs for liquidity, changes in the availability of and the yield on alternative investments, changes in funding sources and terms, and changes in foreign currency risk.

Investments in debt securities that are not classified as held-to-maturity and equity securities that have readily determinable fair values are classified as either trading securities or available-for-sale securities and are measured at fair value in the balance sheet. Trading securities are those securities that are bought and held principally for the purpose of selling them in the near future. Trading generally reflects active and frequent buying and selling and trading securities are generally used with the objective of generating profits on short-term differences in prices. Available-for-sale securities are those investments not classified as either trading securities or held-to-maturity securities.

Statement No. 115 requires unrealized holding gains and losses for trading securities to be included in earnings in the current period. Unrealized holding gains and losses for available-for-sale securities are excluded from earnings; however, they are reported as a net amount in a separate component of shareholders' equity until realized.

For individual securities classified as either available-for sale or held-to-maturity, an entity must determine whether a decline in the security's fair value below the amortized cost is other than temporary. If the decline in fair value is determined to be permanent, that is, it is probable that the entity will not be able to collect all amounts due under the contractual terms of the security, the realized loss is accounted for in earnings of the current period. The new cost basis is not adjusted upward for subsequent recoveries in the fair value. Subsequent increases in the fair value of available-for-sale securities are included in the separate component of equity. Subsequent decreases are also included in the separate component of equity.

All trading securities are reported as current assets in the balance sheet and individual held-to-maturity and available-for-sale securities are classified as either current or noncurrent, as appropriate. Cash flows from the purchase, sale, or maturity of available-for-sale securities and held-to-maturity securities are classified in the statement of cash flows as cash flows from investing activities and reported gross for each security classification.

Accounting Requirements

All RUS borrowers must adopt the accounting, reporting, and disclosure requirements set forth in Statement No. 115 as of the statement's implementation date. Unrealized holding gains or losses for trading securities shall be recorded in either Account 421, Miscellaneous Nonoperating Income, or Account 426.5, Other Deductions, as appropriate. Unrealized holding gains or losses for available-for-sale securities held by the corporate entity are recognized as a component of stockholder's equity in Account 215.1, Unrealized Gains and Losses—Debt and Equity Securities. A contra account of the investment account shall be debited or credited accordingly. Unrealized gains and losses for available-for-sale securities held in a decommissioning fund shall increase or decrease, as appropriate, the reported value of the fund.

Effective Date and Implementation

Statement No. 115 is effective for fiscal years beginning after December 15, 1993. At the beginning of the entity's fiscal year, the entity must classify its debt and equity securities on the basis of the entity's current intent. This statement may not be applied retroactively to prior years' financial statements. For fiscal years beginning prior to December 16, 1993, reporting entities are permitted to apply Statement No. 115 as of the end of a fiscal year for which annual financial statements have not previously been issued.

Dated: October 2, 1995.

Jill Long Thompson,

Under Secretary, Rural Economic and Community Development.

[FR Doc. 95–27006 Filed 10–31–95; 8:45 am]

BILLING CODE 3410–15–P

Animal and Plant Health Inspection Service

9 CFR Part 94

[Docket No. 95–050–2]

Uruguay; Change in Disease Status

AGENCY: Animal and Plant Health Inspection Service, USDA.

ACTION: Final rule.

SUMMARY: We are amending the regulations to declare Uruguay free of rinderpest and foot-and-mouth disease. As part of this action, we are adding Uruguay to the list of countries that, although declared free of rinderpest and foot-and-mouth disease, are subject to restrictions on meat and other animal products offered for importation into the United States. Declaring Uruguay free of rinderpest and foot-and-mouth disease is appropriate because the last outbreak of foot-and-mouth disease in Uruguay occurred in 1990, there have been no vaccinations for foot-and-mouth disease in Uruguay since June 1994, and rinderpest has never existed in Uruguay. This rule will remove the prohibition on the importation into the United States, from Uruguay, of ruminants and fresh, chilled, and frozen meat of ruminants, although those importations would be subject to certain restrictions. This rule will also relieve certain prohibitions and restrictions on the importation, from Uruguay, of milk and milk products of ruminants.

EFFECTIVE DATE: November 16, 1995.

FOR FURTHER INFORMATION CONTACT: Dr. John Blackwell, Senior Staff Microbiologist, Import/Export Products, National Center for Import and Export, VS, APHIS, 4700 River Road Unit 40, Riverdale, MD 20737–1231, (301) 734–5875.

SUPPLEMENTARY INFORMATION:

Background

The regulations in 9 CFR 94 (referred to below as the regulations) govern the importation into the United States of specified animals and animal products in order to prevent the introduction into the United States of various animal diseases, including rinderpest and foot-and-mouth disease (FMD). Rinderpest and FMD are dangerous and destructive communicable diseases of ruminants and swine.

On August 4, 1995, we published in the Federal Register (60 FR 39890–39893, Docket No. 95–050–1) a proposal to amend the regulations by adding Uruguay to list in § 94.1(a)(2) of countries declared to be free of both rinderpest and FMD. In that document, we also proposed to add Uruguay to the list in § 94.11(a) of countries that, although declared free of rinderpest and FMD, are subject to special restrictions on the importation of their meat and other animal products into the United States.

We solicited comments concerning our proposal for 60 days ending October 3, 1995. We received 7 comments by that date. They were from industry associations, a beef importer, a meat-food processor, and representatives of the government of Uruguay. We carefully considered all of the comments we received. All comments were supportive of the proposed rule. However, one of the commenters requested additional information about some specific provisions of the proposed rule. That comment is discussed below.

Comment: The proposed rule did not completely review § 94.11 and the relevant elements of 9 CFR chapter 3 so we could efficiently review the existing regulations. The final rule must address the following key issues so we can fully understand the scope of efforts taken to reduce the risk of FMD:

(1) Uruguay must maintain strict border control.

(2) Uruguay must have a significant veterinary infrastructure including monitoring and surveillance for FMD. The Animal and Plant Health Inspection Service (APHIS) should have a presence in Uruguay to verify compliance efforts.

(3) There should be no commingling of animals or animal products, nor opportunity for commingling.

(4) APHIS should conduct ongoing assessments of the production capacity of Uruguay to provide early indication of efforts to circumvent restrictions regarding commingling of animals and animal products from other countries.

(5) All meat must be completely deboned and of the proper pH prior to export to ensure that FMD is neither present nor viable.

(6) Uruguayan slaughter and processing plants qualified to export to the United States must process meat and other animal products in accordance with all United States Department of Agriculture (USDA) and Food and Drug Administration regulations.

(7) APHIS must be prepared to act promptly if there is a foreign animal disease outbreak in the United States.

Response: In 1994, a team of APHIS officials traveled to Uruguay to conduct an on-site evaluation of the country's animal health program with regard to the rinderpest and FMD situation in Uruguay. The evaluation consisted of a review of Uruguay's veterinary services, diagnostic procedures, vaccination practices, and administration of laws and regulations intended to prevent the introduction of rinderpest and FMD into Uruguay through the importation of animals, meat, or animal products. The APHIS officials conducting the on-site evaluation concluded that Uruguay is free of rinderpest and FMD and that the country's veterinary infrastructure is exemplary.

The United States and Uruguay both belong to the Organization Internationale des Epizooties (OIE). Uruguay is required to report changes in animal health status to the OIE, and any such changes would be reported to the United States. In addition, the Food Safety and Inspection Service (FSIS), USDA, performs periodic inspections of the USDA-approved plants. APHIS can inquire of FSIS regarding the general condition of the plants and the health status of animals going to slaughter in the plants.

Further, the APHIS officials who visited Uruguay in 1994 evaluated all border crossing points and determined that the country's veterinary infrastructure is sufficient to maintain them. The regional sanitary situation also reduces the risk of FMD spreading into Uruguay. Argentina has not detected a focus of FMD since April of 1994. The last cases of FMD in the Brazilian States of Santa Catalina and Rio Grande do Sul occurred in December of 1993. Paraguay has recently completed one full year of clinical absence of the disease in all of its territory. Rinderpest has never occurred in Argentina, Brazil, or Paraguay.

Uruguay shares a common land border with countries that have not been declared free of FMD. Uruguay also supplements its national meat supply by importing fresh, chilled, and frozen meat of ruminants and swine from countries where rinderpest or FMD exists. Therefore, although Uruguay is free of rinderpest and FMD, Uruguay's meat and animal products are still subject to § 94.11 and parts of chapter 3 of 9 CFR. Section 94.11 requires that meat and other animal products imported into the United States from Uruguay are accompanied by a health certificate signed by a veterinary official of Uruguay confirming that they have not been commingled, directly or indirectly, with meat or animal products from a country where rinderpest or FMD exists. Section 94.11 and chapter 3 of 9 CFR require that meat and other animal products consigned to the United States by Uruguay must also be accompanied by a Department-approved foreign meat inspection certificate to ensure that they were derived from livestock which was inspected by a veterinarian before and after slaughter, were handled in a sanitary manner, and were otherwise in accordance with requirements equivalent to those in the Federal Meat Inspection Act and related regulations. In addition, chapter 3 requires that slaughtering and processing establishments in Uruguay must be certified in order to have their products imported into the United States. Certifications of establishments must be

renewed annually. These required certifications verify that the meat and other animal products being imported into the United States from Uruguay meet the conditions of our regulations.

The purpose of the requirements that all meat must be completely deboned and of the proper pH prior to export is to eliminate rinderpest and FMD disease organisms from the meat. These requirements do not apply to Uruguay, because the country has been declared free of rinderpest and FMD.

APHIS has an emergency programs staff which has developed procedures for decontamination, control, and eradication of FMD should an outbreak occur in the United States.

Therefore, based on the rationale set forth in the proposed rule and in this document, we are adopting the provisions of the proposal as a final rule.

Effective Date

This is a substantive rule that relieves restrictions and, pursuant to the provisions of 5 U.S.C. 553, may be made effective less than 30 days after publication in the Federal Register. This rule removes the prohibition on the importation, from Uruguay, of ruminants and fresh, chilled, and frozen meat of ruminants into the United States from Uruguay and relieves restrictions on the importation, from Uruguay, of milk and milk products of ruminants. We have determined that approximately 2 weeks are needed to ensure that Animal and Plant Health Inspection Service personnel at ports of entry receive official notice of this change in the regulations. Therefore, the Administrator of the Animal and Plant Health Inspection Service has determined that this rule should be made effective 15 days after publication in the Federal Register.

Executive Order 12866 and Regulatory Flexibility Act

This rule has been reviewed under Executive Order 12866. For this action, the Office of Management and Budget has waived its review process required by Executive Order 12866.

This final rule amends the regulations in part 94 by adding Uruguay to the list of countries declared free of rinderpest and FMD. This action will remove the prohibition on the importation into the United States, from Uruguay, of ruminants and fresh, chilled, and frozen meat of ruminants, although these imports will be subject to certain restrictions. This rule will also relieve restrictions on the importation, from Uruguay, of milk and milk products of ruminants. This action will not relieve restrictions on the importation of live swine and fresh, chilled, and frozen meat of swine from Uruguay, because Uruguay has not been declared free of hog cholera.

The primary effects of this change in the regulations will be limited to bovine meat and prepared products. Swine and swine products are excluded because of restrictions due to hog cholera, and the United States has not imported any mutton, lamb, or goat meat from Uruguay in the last 2 years. This situation is not expected to change as a result of the rule.

This rule is expected to affect United States imports of various animal products from Uruguay, including embryos, semen, breeding animals, and other products.

The increase in beef imports resulting from the rule change is expected to have a minimal negative impact on producers, while benefitting consumers.

Uruguayan beef production is made up mostly of grass-fed product. Grass-fed animals take longer to reach slaughter weights and are lighter at slaughter than grain-fed cattle. As a result, although Uruguayan cattle inventories (10.4 million at the end of 1994) are about 10 percent of United States cattle inventories (103.3 million on January 1, 1995), Uruguayan beef production runs at only 2 to 4 percent of United States production. Uruguay currently exports one third of its beef production. However, Uruguay is not expected to exceed the 20,000 metric ton (MT) tariff-free quota limit for exports of beef into the United States established under the General Agreement on Tariffs and Trade (GATT).

Twenty-two percent of United States beef consumption goes into ''non table-cut'' applications, such as fast-food hamburgers and other prepared meats; 78 percent of United States beef consumption goes into consumer applications, such as steak and filet mignon, that require beef produced from grain-fed cattle. (Beef produced in the United States comes predominantly from grain-fed cattle and is used for higher-quality table-cuts.) Most of the beef exported from Uruguay is produced from grass-fed cattle and is suitable for lower-quality, non table-cut applications. However, select cuts of beef from grass-fed cattle may be of the same quality as cuts from grain-fed cattle. For the most part, beef exports from Uruguay will affect the market for non table-cut beef in the United States.

Beef and dairy farms and feedlot operators will experience the greatest impact as a result of the rule. According to Small Business Administration (SBA) criteria, beef and dairy farms with annual sales of less than $0.5 million are considered small. In 1992, 801,940 operations with beef cows were considered small. These small farms averaged sales of $20,976 in 1992, as opposed to average sales of $1.3 million on large farms.

Recent USDA data indicated that 152,500 dairy farms were considered small. In addition to the sale of dairy products, the sale of culled dairy cattle and young stock not retained for milking or breeding contributed to dairy farm income. In the worst case scenario, the rule change could produce a drop in net farm income of $15 on small beef farms and $83 on small dairy farms when imports were assumed to consist of beef from grass-fed cattle.

With regards to the sale of dairy products, the Department does not anticipate a major increase in exports of milk and milk products from Uruguay into the United States as a result of this rule change. Only about 10 percent of Uruguay's cow herd is made up of dairy cows, and it is expected that the increase in beef cattle returns will not significantly alter this situation. In addition, all dairy products imported into the United States are restricted by quotas except for casein, caseinate, and other casein derivatives (hereafter referred to as casein), which are dry milk products. The United States does not produce casein, but does import more than half of the casein produced in the world. Uruguay has not exported casein to the United States in recent years. Declaring Uruguay free of FMD is expected to have a minimal effect on the amount of casein imported into the United States.

According to the SBA, feedlots with sales of less than $1.5 million are considered small. Recent USDA data indicate that 30 percent of feedlots in the United States are considered small. In the worst case scenario, the rule change could produce a loss of $30 per year in gross sales for a small feedlot.

The impact of the rule on cattle dealers/haulers and cattle slaughterers/primary processors will be minimal because the reduction in the number of cattle marketed and the number of truck hauls required to move them will be very small in relation to the current numbers.

Under these circumstances, the Administrator of the Animal and Plant Health Inspection Service has determined that this action will not have a significant economic impact on a substantial number of small entities.

Executive Order 12778

This rule has been reviewed under Executive Order 12778, Civil Justice Reform. This rule: (1) Preempts all State and local laws and regulations that are inconsistent with this rule; (2) has no retroactive effect; and (3) does not require administrative proceedings before parties may file suit in court challenging this rule.

Paperwork Reduction Act

This rule contains no information collection or recordkeeping requirements under the Paperwork Reduction Act of 1995 (44 U.S.C. 3501 *et seq.*).

List of Subjects in 9 CFR Part 94

Animal diseases, Imports, Livestock, Meat and meat products, Milk, Poultry and poultry products, Reporting and recordkeeping requirements.

Accordingly, 9 CFR part 94 is amended as follows:

PART 94—RINDERPEST, FOOT-AND-MOUTH DISEASE, FOWL PEST (FOWL PLAGUE), VELOGENIC VISCEROTROPIC NEWCASTLE DISEASE, AFRICAN SWINE FEVER, HOG CHOLERA, AND BOVINE SPONGIFORM ENCEPHALOPATHY: PROHIBITED AND RESTRICTED IMPORTATIONS

1. The authority citation for part 94 continues to read as follows:

Authority: 7 U.S.C. 147a, 150ee, 161, 162, and 450; 19 U.S.C. 1306; 21 U.S.C. 111, 114a, 134a, 134b, 134c, 134f, 136, and 136a; 31 U.S.C. 9701; 42 U.S.C. 4331, 4332; 7 CFR 2.17, 2.51, and 371.2(d).

§ 94.1 [Amended]

2. In § 94.1, paragraph (a)(2) is amended by removing ''and Trust Territory of the Pacific Islands'' and adding ''Trust Territory of the Pacific Islands, and Uruguay'' in its place.

§ 94.11 [Amended]

5. In § 94.11, paragraph (a), the first sentence is amended by removing ''and Switzerland'' and adding ''Switzerland, and Uruguay'' in its place.

Done in Washington, DC, this 26th day of October 1995.

Lonnie J. King,

Administrator, Animal and Plant Health Inspection Service.

[FR Doc. 95–27009 Filed 10–31–95; 8:45 am]

BILLING CODE 3410–34–P

9 CFR Part 161

[Docket No. 94–027–3]

Standards for Accredited Veterinarian Duties

AGENCY: Animal and Plant Health Inspection Service, USDA.

ACTION: Technical amendment.

SUMMARY: We are making a technical amendment to correct an omission in the regulations regarding standards for accredited veterinarians.

EFFECTIVE DATE: November 1, 1995.

FOR FURTHER INFORMATION CONTACT: Dr. J.A. Heamon, Senior Staff Veterinarian, National Animal Health Programs, VS, APHIS, 4700 River Road Unit 43, Riverdale, MD, 20737–1231; (301) 734–6954.

SUPPLEMENTARY INFORMATION:

Background

In accordance with 9 CFR parts 160, 161, and 162 (referred to below as the regulations), some veterinarians are accredited by the Federal Government to cooperate with the Animal and Plant Health Inspection Service (APHIS) in controlling and preventing the spread of animal diseases throughout the country and internationally. Accredited veterinarians use their professional training in veterinary medicine to perform certain regulatory tasks.

As part of a final rule published in the Federal Register on August 4, 1995 (60 FR 39840–39842, Docket No. 94–027–2), and effective September 5, 1995, we revised the regulations in § 161.3(a) to allow accredited veterinarians to issue official animal health documents for up to 30 days after inspecting animals in herds or flocks under regular health maintenance programs and for up to 10 days after inspecting all other animals. When we revised that paragraph, we inadvertently failed to retain the provisions of the original paragraph that specified the conditions under which the subject animal must be inspected. It was never our intention to remove or modify those conditions, and no changes to those conditions were discussed in the final rule or in the proposed rule that preceded it (60 FR 13084–13086, Docket No. 94–027–1, published March 10, 1995). We are, therefore, amending the introductory text of § 161.3(a) to restore those provisions regarding the location and manner in which animals must be inspected.

List of Subjects in 9 CFR Part 161

Reporting and recordkeeping requirements, Veterinarians.

Accordingly, 9 CFR part 161 is amended as follows:

PART 161—REQUIREMENTS AND STANDARDS FOR ACCREDITED VETERINARIANS AND SUSPENSION OR REVOCATION OF SUCH ACCREDITATION

1. The authority citation for part 161 continues to read as follows:

Authority: 15 U.S.C. 1828; 21 U.S.C. 105, 111–114, 114a, 114a–1, 115, 116, 120, 121, 125, 134b, 134f, 612, and 613; 7 CFR 2.17, 2.51, and 371.2(d).

2. In § 161.3, at the end of the introductory text of paragraph (a), two new sentences are added after the first sentence to read as follows:

§ 161.3 Standards for accredited veterinarian duties.

* * * * *

(a) * * * Inspections under this paragraph must be conducted in a location that allows the accredited veterinarian sufficient space to observe the animal in such a manner as to detect abnormalities related to areas such as, but not limited to, locomotion, body excretion, respiration, and skin conditions. An accredited veterinarian shall examine each animal showing abnormalities, in order to determine whether or not there is clinical evidence compatible with the presence or absence of a communicable disease.

* * * * *

Done in Washington, DC, this 26th day of October 1995.

Lonnie J. King,

Administrator, Animal and Plant Health Inspection Service.

[FR Doc. 95–27008 Filed 10–31–95; 8:45 am]

BILLING CODE 3410–34–P

DEPARTMENT OF TRANSPORTATION

Federal Aviation Administration

14 CFR Part 39

[Docket No. 92–ASW–01–AD; Amendment 39–9417; AD 95–22–09]

Airworthiness Directives; Boeing Defense and Space Group Helicopter Division Model 234 Series Helicopters

AGENCY: Federal Aviation Administration, DOT.

ACTION: Final rule.

SUMMARY: This amendment supersedes an existing airworthiness directive (AD), applicable to Boeing Defense and Space Group Helicopter Division (Boeing) Model 234 series helicopters, that currently requires inspections of the

forward and aft transmission first stage sun and spiral bevel ring gear bolted connection (bolted connection). This amendment requires a revision to the inspection intervals and criteria used during these inspections, as well as adds a visual inspection of the pinion and spiral bevel ring gear. This amendment is prompted by reports that certain of the affected helicopters have been discovered with loose nuts on the bolted connection more frequently than was anticipated in the previous AD. The actions specified by this AD are intended to prevent wear of the spiral bevel ring gear flange surface, failure of the bolted connection, transmission failure, and subsequent loss of control of the helicopter.

EFFECTIVE DATE: December 6, 1995.

ADDRESSES: The service information referenced in this AD may be obtained from Boeing Defense and Space Group Helicopter Division, P.O. 16858, Philadelphia, PA 19142–0858. This information may be examined at the FAA, Office of the Assistant Chief Counsel, 2601 Meacham Blvd., Room 663, Fort Worth, Texas; or at the Office of the Federal Register, 800 North Capitol Street, NW., suite 700, Washington, DC.

FOR FURTHER INFORMATION CONTACT: Mr. Raymond Reinhardt, Aerospace Engineer, FAA, New York Aircraft Certification Office, Airframe and Propulsion Branch, ANE–171, New England Region, 10 Fifth Street, Valley Stream, New York 11581, telephone (516) 256–7532, fax (516) 568–2716.

SUPPLEMENTARY INFORMATION: A proposal to amend part 39 of the Federal Aviation Regulations (14 CFR part 39) by superseding AD 84–22–04, Amendment 39–4943 (49 FR 44093, November 2, 1984), which is applicable to Boeing Model 234 series helicopters, was published in the Federal Register on August 19, 1992 (57 FR 37481). That action proposed to require, within 10 hours time-in-service (TIS) or prior to the accumulation of 150 hours TIS for helicopters that conduct six or more landings, ground-air-ground cycles, or external load lifts per hour, or any combination thereof: (1) An initial Spectrometric Oil Analysis Program (SOAP) sample inspection; (2) a visual inspection of the pinion and spiral bevel ring gear teeth for scuffing; (3) an initial bolt torque inspection of the bolted connection; and (4) thereafter, repetitive inspections at 25 hours TIS or 50 hours TIS depending on the torque values present on the nuts of the bolted connection when the previous inspection was conducted. Additionally, that action proposed to require, within 50 hours TIS or prior to the accumulation of 500 hours TIS for helicopters that conduct less than six landings, ground-air-ground cycles, or external load lifts per hour or any combination thereof: (1) An initial SOAP sample inspection; (2) a visual inspection of the pinion and spiral bevel ring gear teeth for scuffing; (3) an initial bolt torque inspection of the bolted connection; and (4) repetitive inspections at 100 hours TIS or 300 hours TIS depending on the torque values present on the nuts of the bolted connection when the previous inspection was conducted.

Interested persons have been afforded an opportunity to participate in the making of this amendment. Due consideration has been given to the one comment received.

The commenter requests an increase in the TIS before the initial inspections from 150 to 200 hours TIS, and from 50 to 100 hours TIS between the repetitive inspections, and deletion of the proposed requirement for a SOAP inspection. The commenter states that with the repairs they have made and by using improved lubricants, their experience shows that the interval between inspections can be extended. The commenter also states that SOAP inspections are already being performed; therefore, a SOAP inspection should not be required. The FAA neither concurs with increasing the initial nor repetitive inspection intervals, nor does it concur in the commenter's position that SOAP inspections should not be required. After an analysis of the manufacturer's recommendations and the affected helicopter usage, the FAA has determined that helicopters involved in operations that require constant power changes such as logging, heavy lift operations, or several ground-air-ground cycles for each flight hour are more likely to be subject to the nut loosening or gear teeth scuffing conditions and at a faster rate. Therefore, inspection intervals are spaced such that early detection of any unsafe condition or unairworthy part is more likely to occur.

After careful review of the available data, including the comment noted above, the FAA has determined that air safety and the public interest require the adoption of the rule as proposed, except for reorganizing and editorial changes.

The FAA estimates that 7 helicopters of U.S. registry will be affected by this AD, that it will require 100 SOAP and 100 torque inspections per year per helicopter, and that it will take approximately 2 work hours with a crew of 2 per helicopter to accomplish the 50 hour TIS inspection, and 1 work hour with 1 person per helicopter to accomplish the SOAP sample inspection. The average labor rate is $60 per work hour. Based on these figures, the total cost of the AD on U.S. operators is estimated to be $210,000 per year.

The regulations adopted herein will not have substantial direct effects on the States, on the relationship between the national government and the States, or on the distribution of power and responsibilities among the various levels of government. Therefore, in accordance with Executive Order 12612, it is determined that this final rule does not have sufficient federalism implications to warrant the preparation of a Federalism Assessment.

For the reasons discussed above, I certify that this action (1) is not a ''significant regulatory action'' under Executive Order 12866; (2) is not a ''significant rule'' under DOT Regulatory Policies and Procedures (44 FR 11034, February 26, 1979); and (3) will not have a significant economic impact, positive or negative, on a substantial number of small entities under the criteria of the Regulatory Flexibility Act. A final evaluation has been prepared for this action and it is contained in the Rules Docket. A copy of it may be obtained from the Rules Docket at the location provided under the caption **ADDRESSES**.

List of Subjects in 14 CFR Part 39

Air transportation, Aircraft, Aviation safety, Safety.

Adoption of the Amendment

Accordingly, pursuant to the authority delegated to me by the Administrator, the Federal Aviation Administration amends part 39 of the Federal Aviation Regulations (14 CFR part 39) as follows:

PART 39—AIRWORTHINESS DIRECTIVES

1. The authority citation for part 39 continues to read as follows:

Authority: 49 U.S.C. 106(g), 40101, 40113, 44701.

§ 39.13 [Amended]

2. Section 39.13 is amended by removing Amendment 39–4943 (49 FR 44093, November 2, 1984), and by adding a new airworthiness directive (AD), Amendment 39–9417, to read as follows:

AD 95–22–09 Boeing Defense and Space Group Helicopter Division: Amendment 39–9417. Docket No. 92–ASW–01–AD. Supersedes AD 84–22–04, Amendment 39–4943.

Applicability: Model 234 series helicopters, with forward rotor transmission, part numbers (P/N) 234D1200–2, –3, or –4, or aft rotor transmission, P/N 234D2200–3 or –4, installed, certificated in any category.

Note 1: This AD applies to each helicopter identified in the preceding applicability provision, regardless of whether it has been modified, altered, or repaired in the area subject to the requirements of this AD. For helicopters that have been modified, altered, or repaired so that the performance of the requirements of this AD is affected, the owner/operator must use the authority provided in paragraph (c) to request approval from the FAA. This approval may address either no action, if the current configuration eliminates the unsafe condition, or different actions necessary to address the unsafe condition described in this AD. Such a request should include an assessment of the effect of the changed configuration on the unsafe condition addressed by this AD. In no case does the presence of any modification, alteration, or repair remove any helicopter from the applicability of this AD.

Compliance: Required as indicated, unless accomplished previously.

To prevent wear of the spiral bevel ring gear flange surface, failure of the bolted connection, transmission failure, and subsequent loss of control of the helicopter, accomplish the following:

(a) For helicopters that perform six or more landings, ground-air-ground cycles, or external load lifts per hour, or any combination thereof, conduct the following:

(1) Within the next 10 hours time-in-service (TIS) after the effective date of this AD, or prior to the accumulation of 150 hours TIS since installed or since the last disassembly of the spiral bevel ring gear bolted connection, whichever occurs later, accomplish the following:

(i) Conduct a Spectrometric Oil Analysis Program (SOAP) sample inspection in accordance with the applicable maintenance manual.

(ii) Visually inspect the pinion and spiral bevel ring gear teeth for scuffing. If scuffing is found, remove both the pinion and the first stage sun and spiral bevel ring gear assemblies, disassemble the gear assemblies, inspect them in accordance with the applicable overhaul manual, and replace unairworthy parts.

(iii) Perform a bolt torque inspection of the bolted connection in accordance with the applicable maintenance manual.

(2) Repeat the inspections required by paragraph (a)(1) at intervals not to exceed 50 hours TIS if no nuts in the bolted connection rotate at a torque below 350 in.–lb.

(3) Repeat the inspection required by paragraph (a)(1) at intervals not to exceed 25 hours TIS if no more than two nuts in the bolted connection rotate at a torque below 350 in.–lb., but above 275 in.–lb.

(4) Replace the transmission with an airworthy transmission prior to further flight if three or more nuts in the bolted connection rotate at a torque below 350 in.–lb., or if any nut rotates at a torque at or below 275 in.–lb.

(5) Conduct supplementary SOAP sample inspections at intervals not to exceed 25 hours TIS after the last SOAP sample inspection.

(b) For helicopters that perform less than six landings, ground-air-ground cycles, or external load lifts per hour, or any combination thereof, conduct the following inspections:

(1) Within the next 50 hours TIS after the effective date of this AD, or prior to the accumulation of 500 hours TIS since installed or since the last disassembly of the spiral bevel ring gear bolted connection, whichever occurs later, accomplish the following:

(i) Conduct a SOAP sample inspection in accordance with the applicable maintenance manual.

(ii) Visually inspect the pinion and spiral bevel ring gear teeth for scuffing. If scuffing is found, remove both the pinion and and the first stage sun and spiral bevel ring gear assemblies, disassemble the gear assemblies, inspect them in accordance with the applicable overhaul manual, and replace unairworthy parts.

(iii) Perform a bolt torque inspection of the bolted connection in accordance with the applicable maintenance manual.

(2) Repeat the inspections required by paragraph (b)(1) at intervals not to exceed 300 hours TIS if no nuts in the bolted connection rotate at a torque below 350 in.-lb.

(3) Repeat the inspections required by paragraph (b)(1) at intervals not to exceed 100 hours TIS if no more than two nuts in the bolted connection rotate at a torque below 350 in.-lb, but above 275 in.-lb.

(4) Replace the transmission with an airworthy transmission prior to further flight if three or more nuts in the bolted connection rotate at a torque below 350 in.-lb., or if any nut rotates at a torque at or below 275 in.-lb.

(5) Conduct supplementary SOAP sample inspections at intervals not to exceed 50 hours TIS after the last SOAP sample inspection.

Note 2: Boeing Helicopters Service Bulletin No. 234–63–1010, Revision 4, dated January 31, 1992, pertains to this AD. Boeing 234–2 Maintenance Manual, section 63–25–50, pertains to this AD. Boeing 234–5 Overhaul Manual pertains to this AD.

(c) An alternative method of compliance or adjustment of the compliance time that provides an acceptable level of safety may be used when approved by the Manager, New York Aircraft Certification Office. Operators shall submit their requests through an FAA Principal Maintenance Inspector, who may concur or comment and then send it to the Manager, New York Aircraft Certification Office.

Note 3: Information concerning the existence of approved alternative methods of compliance with this AD, if any, may be obtained from the New York Aircraft Certification Office.

(d) Special flight permits may be issued in accordance with sections 21.197 and 21.199 of the Federal Aviation Regulations (14 CFR 21.197 and 21.199) to operate the helicopter to a location where the requirements of this AD can be accomplished.

(e) This amendment becomes effective on December 6, 1995.

Issued in Fort Worth, Texas, on October 23, 1995.

Eric Bries,

Acting Manager, Rotorcraft Directorate, Aircraft Certification Service.

[FR Doc. 95–26892 Filed 10–31–95; 8:45 am]

BILLING CODE 4910–13–U

14 CFR Part 71

[Airspace Docket No. 95–ASO–17]

Amendment to Class E Airspace; Leesburg, FL

AGENCY: Federal Aviation Administration (FAA), DOT.

ACTION: Final rule.

SUMMARY: This amendment modifies the Class E airspace area at Leesburg, FL, to accommodate a NDB RWY 31 Standard Instrument Approach Procedure (SIAP) for the Leesburg Municipal Airport. Additional controlled airspace extending upward from 700 feet above the surface (AGL) is needed to accommodate this SIAP and for instrument flight rules (IFR) operations at the airport.

EFFECTIVE DATE: 0901 UTC, January 4, 1996.

FOR FURTHER INFORMATION CONTACT: Benny L. McGlamery, System Management Branch, Air Traffic Division, Federal Aviation Administration, P.O. Box 20636, Atlanta, Georgia 30320; telephone (404) 305–5570.

SUPPLEMENTARY INFORMATION:

History

On August 21, 1995, the FAA proposed to amend part 71 of the Federal Aviation Regulations (14 CFR part 71) by modifying class E airspace at Leesburg, FL (60 FR 43420). This action would provide adequate Class E airspace for IFR operations at the Leesburg Municipal Airport.

Interested parties were invited to participate in this rulemaking proceeding by submitting written comments on the proposal to the FAA. No comments objecting to the proposal were received. Designations for Class E airspace extending upward from 700 feet or more above the surface are published in Paragraph 6005 of FAA Order 7400.9C dated August 17, 1995, and effective September 16, 1995. The Class E airspace designation listed in this document will be published subsequently in the Order.

The Rule

This amendment to part 71 of the Federal Aviation Regulations (14 CFR part 71) modifies Class E airspace at Leesburg, FL, to accommodate a NDB RWY 31 SIAP and for IFR operations at the Leesburg Municipal Airport.

The FAA has determined that this regulation only involves an established body of technical regulations for which frequent and routine amendments are necessary to keep them operationally current. It, therefore, (1) is not a ''significant regulatory action'' under Executive Order 12866; (2) is not a ''significant rule'' under DOT Regulatory Policies and Procedures (44 FR 11034; February 26, 1979); and (3) does not warrant preparation of a regulatory evaluation as the anticipated impact is so minimal. Since this is a routine matter that will only affect air traffic procedures and air navigation, it is certified that this rule will not have a significant economic impact on a substantial number of small entities under the criteria of the Regulatory Flexibility Act.

List of Subjects in 14 CFR Part 71

Airspace, Incorporation by reference, Navigation (air).

Adoption of the Amendment

In consideration of the foregoing, the Federal Aviation Administration amends 14 CFR part 71 as follows:

PART 71—[AMENDED]

1. The authority citation for 14 CFR part 71 continues to read as follows:

Authority: 49 U.S.C. 106(g), 40103, 40113, 40120; EO 10854, 24 FR 9565, 3 CFR, 1959–1963 Comp., p. 389; 14 CFR 11.69.

§ 71.1 [Amended]

2. The incorporation by reference in 14 CFR 71.1 of Federal Aviation Administration Order 7400.9C, Airspace Designations and Reporting Points, dated August 17, 1995, and effective September 16, 1995, is amended as follows:

Paragraph 6005 Class E airspace areas extending upward from 700 feet above the surface of the earth.

* * * * *

ASO FL E5 Leesburg, FL [Revised]

Leesburg Municipal Airport
(Lat. 28°49′22″ N, long. 81°48′33″ W)

That airspace extending upward from 700 feet above the surface within a 7-mile radius of the Leesburg Municipal Airport.

* * * * *

Issued in College Park, Georgia, on October 20, 1995.

Benny L. McGlamery,

Acting Manager, Air Traffic Division, South Region.

[FR Doc. 95–26988 Filed 10–31–95; 8:45 am]

BILLING CODE 4910–13–M

DEPARTMENT OF HEALTH AND HUMAN SERVICES

Food and Drug Administration

21 CFR Part 73

[Docket No. 87C–0316]

Listing of Color Additives Exempt From Certification; Astaxanthin

AGENCY: Food and Drug Administration, HHS.

ACTION: Final rule; response to objection and denial of the request for a hearing; removal of stay for certain provisions.

SUMMARY: The Food and Drug Administration (FDA) is responding to an objection and is denying the request that it has received for a hearing on the final rule that amended the color additive regulations to authorize the use of astaxanthin as a color additive in the feed of salmonid fish to enhance the color of their flesh. The objection concerns a specification and the requirement for labeling of salmonid fish that have been fed feeds that contain the color additive. After reviewing the objection to the final rule, the agency has concluded that the objection does not raise issues of material fact that justify granting a hearing. The agency also is establishing a new effective date for these two provisions of this color additive regulation, which were stayed by a document that published on August 14, 1995.

EFFECTIVE DATE: 21 CFR 73.35(b) and (d)(3), previously stayed (60 FR 41805, August 14, 1995) because of an objection regarding a specification and a labeling requirement, respectively, are effective November 1, 1995.

FOR FURTHER INFORMATION CONTACT: James C. Wallwork, Center for Food Safety and Applied Nutrition (HFS–217), Food and Drug Administration, 200 C St. SW., Washington, DC 20204, 202–418–3078.

SUPPLEMENTARY INFORMATION:

I. Introduction

In the Federal Register of April 13, 1995 (60 FR 18736), FDA issued a final rule permitting the use of astaxanthin as a color additive in the feed of salmonid fish to enhance the color of their flesh. This regulation, codified at 21 CFR 73.35, was issued in response to a color additive petition filed by Hoffmann-La Roche, Inc., in the Federal Register of December 2, 1987 (52 FR 45867). In the preamble to the final rule, FDA discussed the safety basis for the agency's decision to list this use of astaxanthin and responded to 21 letters containing comments to the petition.

II. Objections and Requests for a Hearing

A manufacturer filed a timely objection to two provisions of the regulation and requested a formal evidentiary hearing on the issues raised in its objection. The manufacturer sought to amend the specifications for astaxanthin, specifically requesting that the 4 percent specification for carotenoids other than astaxanthin be changed to 40 percent. The manufacturer also sought to amend the labeling requirements for astaxanthin by removal of the requirement to label the presence of the color additive, in accordance with §§ 101.22(k)(2) and 101.100(a)(2) (21 CFR 101.22(k)(2) and 101.100(a)(2)), in salmonid fish that were fed feeds containing astaxanthin. The agency announced the stay of the two affected paragraphs of the regulation, namely § 75.73(b) and (d)(3), in the Federal Register of August 14, 1995 (60 FR 41805). In that document the agency confirmed the effective date of May 16, 1995, for the remainder of the regulation.

III. Standards for Granting a Hearing

Sections 701(e)(2) and 721(d) of the Federal Food, Drug, and Cosmetic Act (the act) (21 U.S.C. 371(e)(2) and 379e(d)) provide that, within 30 days after publication of an order relating to a color additive regulation, any person adversely affected by such an order may file objections, specifying with particularity the provisions of the order ''deemed objectionable, stating the grounds therefor,'' and requesting a public hearing based upon such objections. FDA may deny a hearing request if the objections to the regulation do not raise genuine and substantial issues of fact that can be resolved at a hearing *Community Nutrition Institute* v. *Young*, 773 F.2d 1356, 1364 (D.C. Cir. 1985), *cert. denied*, 475 U.S. 1123 (1986).

Specific criteria for determining whether a request for a hearing is justified are set forth in § 12.24(b) (21 CFR 12.24(b)). A hearing will be granted if the material submitted by the requester shows that:

(1) There is a genuine and substantial issue of fact for resolution at a hearing. A hearing will not be granted on issues of policy or law.

(2) The factual issue can be resolved by available and specifically identified reliable evidence. A hearing will not be granted on the basis of mere allegations or denials or general descriptions of positions and contentions.

(3) The data and information submitted, if established at a hearing, would be adequate to justify resolution of the factual issue in the way sought by the person. A hearing will be denied if the Commissioner concludes that the data and information submitted are insufficient to justify the factual determination urged, even if accurate.

(4) Resolution of the factual issue in the way sought by the person is adequate to justify the action requested. A hearing will not be granted on factual issues that are not determinative with respect to the action requested, e.g., if the Commissioner concludes that the action would be the same even if the factual issue were resolved in the way sought, * * *.

(5) The action requested is not inconsistent with any provision in the act or any regulation particularizing statutory standards. The proper procedure in those circumstances is for the person requesting the hearing to petition for an amendment or waiver of the regulation involved.

(6) The requirements in other applicable regulations, e.g., 21 CFR 10.20, 12.21, 12.22, 314.200, 314.300, 514.200, and 601.7(a), and in the notice promulgating the final regulation or the notice of opportunity for a hearing are met.

A party seeking a hearing is required to meet a ''threshold burden of tendering evidence suggesting the need for a hearing.'' *Costle* v. *Pacific Legal Foundation*, 445 U.S. 198, 214–215 (1980) *reh. den.*, 445 U.S. 947 (1980), citing *Weinberger* v. *Hynson, Westcott & Dunning, Inc.*, 412 U.S. 609, 620–621 (1973). An allegation that a hearing is necessary to ''sharpen the issues'' or to ''fully develop the facts'' does not meet this test. *Georgia Pacific Corp.* v. *U.S. E.P.A.*, 671 F.2d 1235, 1241 (9th Cir. 1982). If a hearing request fails to identify any factual evidence that would be the subject of a hearing, there is no point in holding one. In judicial proceedings, a court is authorized to issue summary judgment without an evidentiary hearing whenever it finds that there are no genuine issues of material fact in dispute, and a party is entitled to judgment as a matter of law. See Rule 56, *Federal Rules of Civil Procedure*. The same principle applies in administrative proceedings.

A hearing request must not only contain evidence, but that evidence should raise a material issue of fact concerning which a meaningful hearing might be held. *Pineapple Growers Association* v. *FDA*, 673 F.2d 1083, 1085 (9th Cir. 1982). Where the issues raised in the objection are, even if true, legally insufficient to alter the decision, the agency need not grant a hearing. *Dyestuffs and Chemicals, Inc.* v. *Flemming*, 271 F.2d 281 (8th Cir. 1959) *cert. denied*, 362 U.S. 911 (1960). FDA need not grant a hearing in each case where an objector submits additional information or posits a novel interpretation of existing information. See *United States* v. *Consolidated Mines & Smelting Co.*, 455 F.2d 432 (9th Cir. 1971). In other words, a hearing is justified only if the objections are made in good faith and if they ''draw in question in a material way the underpinnings of the regulation at issue.'' *Pactra Industries* v. *CPSC*, 555 F.2d 677 (9th Cir. 1977). Finally, courts have uniformly recognized that a hearing need not be held to resolve questions of law or policy. See *Citizens for Allegan County, Inc.* v. *FPC*, 414 F.2d 1125 (D.C. Cir. 1969); *Sun Oil Co.* v. *FPC*, 256 F.2d 233, 240 (5th Cir.), *cert. denied*, 358 U.S. 872 (1958).

In sum, a hearing request should present sufficient credible evidence to raise a material issue of fact, and the evidence must be adequate to resolve the issue as requested and to justify the action requested.

IV. Analysis of Objections and Response to Hearing Requests

In its objection, the manufacturing company raised two specific issues concerning the agency's final rule for astaxanthin and requested hearings on each issue raised by the objection. In the preamble to the final rule (60 FR 18736), the agency specifically addressed each of the issues raised by this company.

The company's first objection is to the specification in the final rule for total carotenoids other than astaxanthin of 4 percent. The company stated that this particular specification is not necessary or appropriate to assure the identity or the safe use of astaxanthin, and that it is unreasonable when applied to astaxanthin made from natural sources such as the yeast *Phaffia rhodozyma*, krill, or crayfish shells. The company stated that at the hearing it would show that a specification of 40 percent or more for total carotenoids other than astaxanthin would be appropriate.

FDA is denying the company's request for a hearing on this objection under § 12.24(b)(5), in that the request is inconsistent with the act and FDA's regulations. Under section 721(d) of the act, a proceeding for the issuance of a color additive regulation is instituted by the filing of a petition. The petition that led to the issuance of § 73.35 (21 CFR 73.35) sought a specification for total carotenoids other that astaxanthin of 4 percent. FDA granted that aspect of the petition.

Under section 701(e)(2) of the act, a person who will be adversely affected by the agency's action on the petition may object thereto. However, there is nothing in the act or in FDA's regulations that suggests or implies that, or that authorizes, interested persons to use the opportunity to object as an opportunity to expand the authorized use beyond those sought in the petition. On the contrary, 21 CFR 70.19(i) requires that a request for an amendment of a color additive listing regulation be accompanied by a deposit of $1,800.00.

Thus, under the act and FDA's regulations, the scope of a proceeding for the listing of a color additive is limited to the terms and conditions of use set out in the petition. To the extent that a person seeks to extend the petitioned-for terms and conditions of use, the person must do so by separate petition, not by objection to the final rule. To attempt to do so by objection (or by comment on the notice of filing) is to attempt to act in a manner that is inconsistent with the act and FDA's regulations. Therefore, FDA is denying a hearing on this issue. The proper procedure, as stated in § 12.24(b)(5), is for the company to petition for amendment of § 73.35.

The company's second objection is to the requirement that the presence of the color additive be declared on the labels of salmonid fish that have been fed feeds containing the astaxanthin color additive. In support of its objection, the company states that the labeling requirement would be misleading and would place fish farming operations at an unfair disadvantage when competing with the produce of ocean or river fishing. The company contends that every salmon with pink flesh has eaten in its diet foods containing astaxanthin. The company also contends that both types of salmon, whether grown in aquaculture or harvested from the ocean, contain astaxanthin that colors their flesh pink. Thus, the company asserts that the FDA-required astaxanthin labeling of aquacultured fish containing astaxanthin will mislead the public into believing that these two types of fish are different, and that salmon from aquaculture contain a substance not present in normal salmon.

FDA is denying a hearing on this issue for two reasons. First, under its regulations, FDA will not grant a hearing on the basis of mere allegations (§ 12.24(b)(2)). Consistent with this regulation, the relevant case law provides that where a party requesting a hearing only offers allegations without

an adequate proffer to support them, the agency may properly disregard those allegations. *General Motors Corp.* v. *FERC*, 656 F.2d 791, 798 n.20 (D.C. Cir. 1981). The company failed to submit any evidence to support its assertion that requiring the label of salmonid fish fed feeds that contain astaxanthin to declare that color has been added will mislead the public or will cause consumers to believe that fish so labeled are somehow different from other fish. Thus, because it has not proffered support for its allegation, the company has not justified a hearing on this issue.

Second, under § 12.24(b)(4), this assertion would not justify a hearing even if the company had made a proper proffer because declaration of the color additive is required as a matter of law on the label of fish that have been colored with it. Under § 101.22(k), the label of a food to which any coloring has been added shall declare the presence of the coloring in the statement of ingredients. Section 101.22(k) incorporates the provisions of section 403(k) of the act (21 U.S.C. 343(k)) into FDA's regulations.

Under § 101.22(a)(4), a coloring is any ''color additive'' as defined in § 70.3(f) (21 CFR 70.3(f)). Under § 70.3(f), a legislative regulation that was adopted after notice and comment rulemaking (28 FR 6439, June 22, 1963), ''color additive'' includes an ingredient of an animal feed whose intended function is to impart, through the biological processes of the animal, a color to the meat, milk, or eggs of the animal. Thus, as matter of law, astaxanthin is a color additive whose presence in salmonid fish that have been fed feeds that contain this color additive must be declared in the label or labeling of the fish. (Sections 101.22(k)(2) and 101.100(a)(2) of FDA's regulations describe how this declaration is to be made). On this basis, FDA concludes that this objection has no legal merit and does not justify a hearing.

V. Summary and Conclusion

The agency is denying the objection and the request for a hearing on the following: (1) The specification for carotenoid content of astaxanthin under § 73.35(b) on the basis that the request is beyond the scope of the petitioned action for astaxanthin and is appropriately resolved through the submission of a petition (§ 12.24(b)(5)); and (2) the labeling requirement for astaxanthin under § 73.35(d)(3) on the basis that a hearing will not be granted based on mere allegations or general descriptions of positions and contentions (§ 12.24(b)(2)), and that, even if an appropriate proffer had been made, the objection is not determinative of the issue raised (§ 12.24(b)(4)).

The filing of the objection and request for hearings served to stay automatically the effectiveness of the two provisions of § 73.35 to which the objections were made. Section 701(e)(2) of the act states: ''Until final action upon such objections is taken by the Secretary * * *, the filing of such objections shall operate to stay the effectiveness of those provisions of the order to which the objections are made.'' Section 701(e)(3) of the act further stipulates that ''As soon as practicable * * *, the Secretary shall by order act upon such objections and make such order public.''

The agency has completed its evaluation of the objection and the request for a hearing and concludes that a continuation of the stay of the two provisions of the regulation is not warranted.

In the absence of any other objections and requests for a hearing, the agency, therefore, further concludes that this document constitutes final action on the objection and request for hearings received in response to the regulation as prescribed in section 701(e)(2) of the act. Therefore, the agency is acting to end the stay of the two provisions of the regulation by establishing a new effective date of November 1, 1995, for these provisions of the regulation of April 13, 1995, listing astaxanthin for use as a color additive in the feed of salmonid fish to enhance the color of their flesh. As announced in the Federal Register of August 14, 1995 (60 FR 41805), the effective date of the rest of the regulation was May 16, 1995.

Therefore, under the Federal Food, Drug, and Cosmetic Act (secs. 701 and 721 (21 U.S.C. 371 and 379e)) and under authority delegated to the Commissioner of Food and Drugs (21 CFR 5.10), notice is given that the objection and the request for a hearing filed in response to the final rule § 73.35 that was published on April 13, 1995 (60 FR 18736), do not form a basis for further stay of the effectiveness of the specified provisions of this final rule or require amendment of the regulations. Accordingly, the stay of §§ 73.35(b) and 73.35(d)(3) that FDA announced on August 14, 1995 (60 FR 41805), is removed effective November 1, 1995. As noted previously, all other provisions of § 73.35 became effective on May 16, 1995.

Dated: October 25, 1995.

William B. Schultz,

Deputy Commissioner for Policy.

[FR Doc. 95–27033 Filed 10–31–95; 8:45 am]

BILLING CODE 4160–01–F

DEPARTMENT OF DEFENSE

Office of the Secretary

32 CFR Part 199

[DoD 6010.8–R]

RIN 0720–AA19

Civilian Health and Medical Program of the Uniformed Services (CHAMPUS); Expanded Active Duty Dependents Dental Benefit Plan

AGENCY: Office of the Secretary, DoD.

ACTION: Final rule.

SUMMARY: The rule establishes an expanded dental program for dependents of active duty members of the Uniformed Services. The amendment specifically describes: the legislative authority for expansion of dental benefits outside the United States; the continuation of dental benefits for active duty survivors; eligibility for pre-adoptive wards; the enhanced benefit structure; enrollment and eligibility requirements; premium cost-sharing; and benefit payment levels. The provisions of this rule will provide military families with the high quality of care they desire at an affordable price.

EFFECTIVE DATE: This final rule is effective December 1, 1995.

FOR FURTHER INFORMATION CONTACT: David E. Bennett, Program Development Branch, OCHAMPUS, Aurora, Colorado 80045–6900, telephone (303) 361–1094.

SUPPLEMENTARY INFORMATION: In the Federal Register of September 16, 1993 (58 FR 48473), The Office of the Secretary of Defense published for public comment a proposed rule establishing an expanded dental program for dependents of active duty members of the Uniformed Services.

Background

The Basic Active Duty Dependents Dental Benefit Plan, was implemented on August 1, 1987, allowing military personnel to voluntarily enroll their dependents in a dental health care program that included diagnostic and preventative benefits, as well as simple restorative services. Under this program, DoD shared the cost of the premium with the military sponsor. Although the program was viewed as a major step in benefit enhancement for military families, with enrollment levels reaching as high as 60 percent, there were still complaints that the enabling legislation was too restrictive in scope and that there should be expansion of services to better meet the dental needs of the military family.

Congress responded to these concerns by authorizing the Secretary of Defense to develop and implement an Expanded Active Duty Dependents Dental Benefit Plan (The Defense Authorization Act for Fiscal Year 1993, Public Law 102–484, section 701, Revisions to Dependents Dental Program Under CHAMPUS). The provisions of this Act specified the expanded benefit structure, as well as maximum monthly premiums for members and their families, the application of which was not allowed until April 1, 1993. Cost-sharing levels for the expanded benefits were left up to the discretion of the Secretary of Defense after consultation with the other Administering Secretaries.

The provisions of section 701 of The Defense Authorization Act for Fiscal Year 1993, were implemented on April 1, 1993, while the Department proceeded with the rulemaking process required for regulations which have a substantial and direct impact on the CHAMPUS population. This interim Expanded Active Duty Dependents Dental Benefit Plan was initiated based on Congressional direction that improvements take effect April 1, 1993. Revisions were to be made as a result of the rulemaking process in establishment/implementation of a permanent Expanded Active Duty Dependents Dental Benefit Plan.

Coverage/Benefits

Under the Basic Dependents Dental Program which was in effect prior to April 1, 1993, coverage was limited to two categories of dental benefits: diagnostic, oral examination, preventive services and palliative emergency care paid at the lower of the actual charge or 100 percent of the insurer's determined allowable charge; and basic restorative services of amalgam and composite restorations and stainless steel crowns for primary teeth, and dental appliance repairs paid at 80 percent of the allowable charge. Payment to a participating provider was considered payment in full, less the 20 percent cost-share of the allowable charge for restorative services. Nonparticipating providers were paid the same amounts; however, the beneficiary was responsible for the amount of the charge for all services above the allowable charge, except when the dental plan was unable to identify a participating provider of care within 35 miles of the dependent's place of residence with appointment availability within 21 calendar days.

Under the Expanded Active Duty Dependents Dental Benefit Plan, Congress authorizes a broad range of dental services, the payment levels of which are based on actuarial projections and budgeted program costs. The enhanced plan includes those services which were offered under the Basic Active Duty Dependents Dental Plan (examinations, x-rays, cleanings, sealants, fillings) along with the following expanded benefit categories and payment levels:

Covered benefits	Payment levels (percent)
• Sealants	80
• Endodontics (root canal treatment)	60
• Periodontics (treatment of gum disease)	60
• Oral surgery (extractions)	60
• Prosthodontics (bridges and dentures)	50
• Orthodontics (braces)	50
• Crowns and Casts	50

Preventive and diagnostic services will continue to be paid at 100 percent of the insurer's allowable charge, with the exception of sealants which will now be paid at the 80 percent level. Basic restorative services will also remain at the current level (80 percent of the allowable).

''By-report'' professional services (i.e., those services for which a dentist must explain on the claim the unusual circumstances about the case that make them necessary) will be paid at the following payment levels:

By report professional services	Payment levels (percent)
• Miscellaneous Emergency	100
• Professional Consultation	80
• Professional Visits	80
• Drugs	50
• Post-Surgical	80

The beneficiary or sponsor will be responsible for the difference between the insurer's allowable charge and the established payment level for each category of benefit. This cost-share amount will represent the beneficiary's or sponsor's total liability when dealing with participating providers. If the dentist is non-participating, the beneficiary will have to pay any difference between the insurer's allowed amount and the amount charged by the non-participating dentist.

The new benefit program will also be limited by an annual maximum amount of not less than $1000 per beneficiary for non-orthodontic dental care and not less than a $1200 lifetime limit per beneficiary for orthodontics.

Enrollment

The Basic Active Duty Dependents Dental Plan was terminated upon implementation of the interim Expanded Dependents Dental Plan. The effective date of this change was April 1, 1993. Enrollment in this interim plan was automatic for all active duty families in the United States, the District of Columbia, the Commonwealth of Puerto Rico, Guam and the U.S. Virgin Islands, whose military sponsors were known to have at least 24 months remaining in service, and for those dependents enrolled in the Basic Active Duty Dependents Dental Plan regardless of their sponsors' remaining time in service. Enrollment criteria for sponsors outside the continental United States remained unchanged.

Those who intended to remain in the service for 24 or more months and whose families were not automatically enrolled in the new plan, could have enrolled them at their military personnel office by completing DD Form 2494, Uniformed Services Active Duty Dependent Dental Plan (DDP) Enrollment Election Form. DD Form 2494–1, Supplemental Uniformed Services Active Duty Dependent Dental Plan (DDP) Enrollment Election Form, would have been used if dependents had resided in two or more physically separate locations and only the family members in one location were to be enrolled.

Service members who wanted to remove their families from the new interim Expanded Active duty Dependents Dental Benefit Plan were allowed to do so during the one-month period before the date on which the expanded plan went into effect, and for 4 months after the beginning date. They received a full refund of all premiums deducted, so long as the program had not been used following the implementation date. Use of the new plan during the disenrollment period constituted acceptance of the plan by the military sponsor and his or her family. Once the new plan was used, the family could not be disenrolled, and the premiums could not be refunded.

Premium Payments

Monthly premiums for the interim Expanded Active Duty Dependents Dental Benefit Plan were $9.65 for a single member, and $19.30 for two or more family members. Payroll deductions for the new premiums began a month prior to the starting date of the interim plan. These premium rates were

selected to maximize benefits while at the same time maintaining an approximate 60 percent government/40 percent sponsor cost-share specified in congressional reports and meet appropriated budget levels. There were no reductions in premiums for enlisted members in pay grades E–4 and below.

Monthly premiums were increased effective August 1, 1994. The increases were assessed beginning with the September 1994 payroll deduction for active-duty military sponsors. The new premiums are $10 for one enrolled active-duty family member, and $20 for active-duty sponsors with two or more enrolled family members.

Legislative Changes

The Defense Authorization Act (Pub. L. 103–337, October 5, 1994) established: authority for the Secretary of Defense to expand dental benefits outside the United States and to provide continued dental coverage for eligible dependents of service members who die on or after October 1, 1993, while on active duty for up to one year from the date of the member's death; and CHAMPUS eligibility for children placed in the custody of a service member by a court or recognized adoption agency on or after October 5, 1994, in anticipation of a legal adoption. These provisions have been codified in 10 U.S.C. Chapter 55, sections 1072(6) and 1076a—Dependent's Dental Program—and are reflected in the regulatory provisions of this rule.

Review of Comments

As a result of the publication of the proposed rule, the following comments were received from interested associations and agencies.

Comment 1. One commentor felt that all references to ''orthodontia'' should be changed to ''orthodontics'' since it was a more contemporary term and preferred by the specialty.

All references to ''orthodontia'' have been changed to ''orthodontics'' in the final rule.

Comment 2. The same commentor provided a definition which was felt to more accurately describe the scope of orthodontic practice. The commentor felt that the definition contained in the proposed rule failed to adequately address the dentofacial orthopedic aspects of orthodontic practice.

The definition of ''orthodontics'' has been changed to: ''The supervision, guidance, and correction of the growing or mature dentofacial structures, including those conditions that require movement of teeth or correction of malrelationships and malformations of their related structures and the adjustment of relationships between and among teeth and facial bones by the application of forces and/or the stimulation and redirection of functional forces within the craniofacial complex.''

Comment 3. Several commentors expressed concern over specific reference to American Dental Association (ADA) codes in the Regulation since they would become outdated and require continual revision. They pointed out that the ADA's Code on Dental Procedures and Nomenclature was currently under revision and that it would likely result in deletion of several existing codes and the addition of new codes. It was recommended that a general reference be made to the use of codes contained in the current edition of the ADA's Code on Dental Procedures and Nomenclature, without reference to specific codes.

Specific ADA codes have been deleted from the final rule and replaced with a general reference to the use of the American Dental Association's Code on Dental Procedures and Nomenclature as listed in the Current Dental Terminology (CDT) manual.

Comment 4. One commentor felt that ADA code 08999—Unspecified orthodontic procedures—should be included under ''Orthodontics'' [paragraph (e)(2)(vi)] if specific codes continued to be referenced in the final rule.

This is no longer an issue since specific ADA codes have been deleted from the final rule.

Comment 5. One commentor felt that the statement ''subject to the dental plan's exclusions, limitations, and benefit determination rules as adopted by OCHAMPUS'' should be deleted from the final rule since it could be used by the insurance carrier to reduce the actual benefits which would be contrary to the intent of the 1993 law.

All benefit programs must have exclusions and limitations, the intent of which are to define what is and what is not covered and the conditions under which the procedures are benefits. These limitations and exclusions are taken into consideration when determining the cost (premiums). The policies, limitations and exclusions are approved by OCHAMPUS and agreed to by contract.

Comment 6. Another commentor wanted to know how providers will be able to tell who is covered under the old plan (Basic Dependents Dental Plan) and distinguish them from those who are covered under the new plan (Expanded Dependents Dental Plan).

The Basic Active Duty Dependents Dental Benefit Plan was terminated upon implementation of the interim Expanded Active Duty Dependents Dental Benefit Plan on April 1, 1993. Enrollment in this interim plan was automatic for all active duty families in the United States, the District of Columbia, the Commonwealth of Puerto Rico, Guam and the U.S. Virgin Islands, whose military sponsors were known to have at least 24 months remaining in service, and for those dependents that were already enrolled in the Basic Active Duty Dependents Dental Benefits Plan regardless of their sponsors' remaining time in service. Implementation of the interim Expanded Active Duty Dependents Dental Benefit Plan has been addressed in the Supplementary Information section of this rule.

Comment 7. One commentor recommended that the definition of sealants be changed to remove the word ''resinous''.

The word ''resinous'' has been removed from the definition of sealants.

Comment 8. The same commentor felt that the definition of sealants should be further revised by substituting ''on tooth surface'' for ''on the occlusal surfaces.''

The suggestion was not adopted since the existing definition/specification only allows sealants on the unrestored occlusal surface. This applies even when the facial and/or lingual surfaces require a restoration. This was instituted because the previous definition resulted in denial of sealants when any surface of the tooth was carious or restored.

Comment 9. Another commentor recommended that coverage of resin restorations be extended to one to four or more surfaces.

CHAMPUS coverage of resin restorations is extended to one to four or more surfaces under the Expanded Active Duty Dependents Dental Benefit Plan. Specific ADA codes and nomenclature have been deleted from the final rule and replaced with general categories of coverage along with a reference to the use of American Dental Association's Code on Dental Procedures and Nomenclature as listed in the current Dental Terminology manual.

Comment 10. One commentor felt that an appropriate inlay code should be reported along with the onlay code under restorative services since onlays cannot be done without an inlay.

The current procedure code nomenclature and fees define the inlay in addition to the onlay. However, this is to only pay benefits for onlays if the tooth qualified on the basis of breakdown. Simple inlays (not covering cusps) are converted to a comparable

amalgam restoration. Inlays, per se, are not benefits.

Comment 11. One commentor pointed out that 03350 and 04265 were no longer valid ADA codes and should be removed.

Specific ADA codes have been deleted from the final rule and replaced with general categories of coverage along with a reference to the use of the American Dental Association's Code on Dental Procedure and Nomenclature as listed in the current Dental Terminology manual.

Comment 12. Another commentor felt that ''periodontal root planing'' should be expanded to read ''periodontal scaling and root planing.''

Although it is agreed that ''periodontal root planing'' should be expanded to read ''periodontal scaling and root planing,'' specific ADA codes and nomenclature have been deleted from the final rule and replaced with general coverage categories, along with a reference to the use of the American Dental Association's Code on Dental Procedure and Nomenclature as listed in the current Dental Terminology manual.

Comment 13. One commentor felt that ''Periodontal prophylaxis'' should be changed to read ''Periodontal maintenance procedures.''

The terminology of ''periodontal prophylaxis'' clarifies that it is considered a prophylaxis and counts toward the limitations.

Comment 14. One commentor felt that an appropriate inlay code should accompany the onlay code under prosthodontic services.

The current procedure code nomenclature and fees define the inlay in addition to the onlay. However, this is to only pay benefits for onlays if the tooth qualified on the basis of breakdown. Simple inlays (not covering cusps) are converted to a comparable amalgam restoration. Inlays are not benefits.

Comment 15. Another commentor expressed concern over the fact that active duty members could no longer disenroll because of permanent changes in duty station if dental care was available to the members' dependents under a program other than the Dependents Dental Plan. The commentor felt that the proposed regulation did not reflect the statutory right established by 10 U.S.C. Section 1076a(f) to disenroll from the program and subsequently reenroll.

The option to disenroll as a result of a change in active duty station has been reinstated with removal of the mileage restriction.

Summary of Regulatory Modifications

The following revisions were made as a result of legislative mandates, contract modifications, and suggestions received during the public comment period: established authority for expansion of dental benefits outside the United States; provided coverage for eligible dependents of services members who died on active duty for up to one year from date of member's death; established CHAMPUS eligibility for pre-adoptive wards of service members; raised the cost-share from 50 to 60 percent of the insurer's determined allowed charges for endodontics, periodontics and oral surgery; raised the lifetime orthodontic limits from $1000 to $1200; provided payment levels for ''by-report'' professional services; provided new monthly premiums which went into effect on October 1, 1994; reinstated the option to disenroll as a result of a change in active duty station; established a new definition for orthodontics; and removed specific ADA codes/nomenclature and replaced them with general coverage categories and a reference to the use of the American Dental Association's Code on Dental Procedures and Nomenclature as listed in the current Dental Terminology manual.

Regulatory Procedures

Executive Order 12866 requires that a regulatory impact analysis be performed on any significant regulatory action, defined as one which would result in an annual effect on the national economy of $100 million or more, or which would have other substantial impacts.

The Regulatory Flexibility Act (RFA) requires that each federal agency prepare, and make available for public comment, a regulatory flexibility analysis when the agency issues a regulation which would have a significant impact on a substantial number of small entities.

This final rule is not a significant regulatory action under Executive Order 12866. The changes set forth in this final rule are minor revisions to existing regulation. In addition, this rule will have very minor impact and will not significantly affect a substantial number of small entities. In light of the above, no regulatory impact analysis is required.

This final rule does not impose information collection requirements. Therefore, it does not need to be reviewed by the Executive Office of Management and Budget under authority of the Paperwork Reduction Act of 1995 (44 U.S.C. 3501–3520).

List of Subjects in 32 CFR Part 199

Claims, Handicapped, Health insurance, and Military personnel.

Accordingly, 32 CFR part 199 is amended as follows:

PART 199—[AMENDED]

1. The authority citation for Part 199 continues to read as follows:

Authority: 5 U.S.C. 301; 10 U.S.C. chapter 55.

2. Section 199.13 is amended as follows:

a. By removing paragraph (c)(5)(vi).

b. By redesignating paragraphs (c)(2)(ii)(G) as (c)(2)(ii)(H) and (c)(5)(vii) as (c)(5)(vi).

c. By adding paragraph (a)(3)(i)(C), (c)(2)(ii)(G) and (c)(8).

d. Paragraph (b) by adding definitions ''endodontics,'' ''oral surgery,'' ''orthodontics,'' ''periodontics,'' ''Prosthodontics,'' and ''sealants'' and placing them in alphabetical order.

e. Paragraph (b) by revising the definitions for ''beneficiary liability'' and ''participating provider.''

f. By revising paragraphs (c)(1), (c)(3) and (c)(4); (c)(5)(iv) and (c)(5)(v); (e)(1)(i); (e)(2) and (e)(3); (f)(1)(ii); (f)(1)(vi) and (f)(1)(vii); (f)(6)(i) and (f)(6)(ii); (g)(2) and (g)(3) introductory text.

§ 199.13 Active duty dependents dental plan.

* * * * *

(a) * * *

(3) * * *

(i) * * *

(C) *Care outside the United States.* 10 U.S.C. 1076a authorizes the Secretary of Defense to establish basic dental benefit plans for eligible dependents of members of the uniform services accompanying the member on permanent assignments of duty outside the United States.

* * * * *

(b) * * *

Beneficiary liability. The legal obligation of a beneficiary, his or her estate, or responsible family member to pay for the costs of dental care or treatment received. Specifically, for the purposes of services and supplies covered by the Active Duty Dependents Dental Benefit Plan, beneficiary liability includes cost-sharing amounts and any amount above the prevailing fee determination by the insurer where the provider selected by the beneficiary is not a participating provider or a provider within an approved alternative delivery system. Beneficiary liability also includes any expenses for services and supplies not covered by the Active

Duty Dependents Dental Benefit Plan, less any discount provided as a part of the insurer's agreement with an approved alternative delivery system.

* * * * *

Endodontics. The etiology, prevention, diagnosis, and treatment of diseases and injuries affecting the dental pulp, tooth root, and periapical tissue as further defined in paragraph (e) of this section.

* * * * *

Oral surgery. Surgical procedures performed in the oral cavity as further defined in paragraph (e) of this section.

* * * * *

Orthodontics. The supervision, guidance, and correction of the growing or mature dentofacial structures, including those conditions that require movement of teeth or correction or malrelationships and malformations of their related structures and adjustment of relationships between and among teeth and facial bones by the application of forces and/or the stimulation and redirection of functional forces within the craniofacial complex.

* * * * *

Participating provider. A dentist or dental hygienist who has agreed to accept the insurer's reasonable fee allowances or other fee arrangements as the total charge (even though less than the actual billed amount), including provision for payment to the provider by the beneficiary (or sponsor) of any cost-share for services.

* * * * *

Periodontics. The examination, diagnosis, and treatment of diseases affecting the supporting structures of the teeth as further defined in paragraph (e) of this section.

* * * * *

Prosthodontics. The diagnosis, planning, making, insertion, adjustment, relinement, and repair of artificial devices intended for the replacement of missing teeth and associated tissues as further defined in paragraph (e) of this section.

* * * * *

Sealants. A material designed for application on the occlusal surfaces of specified teeth to seal the surface irregularities to prevent ingress of oral fluids, food, and debris in order to prevent tooth decay.

* * * * *

(c) * * *

(1) *General.* 10 U.S.C. 1076a, 1072(2)(A), (D) or (I) and 1072(6) set forth those persons who are eligible for voluntary enrollment in the Active Duty Dependents Dental Benefit Plan. A determination that a person is eligible for voluntary enrollment does not automatically entitle that person to benefit payments. The person must be enrolled in accordance with the provisions set forth in this section and meet any additional eligibility requirements in other sections of this part in order for dental benefits to be extended.

* * * * *

(2) * * *

(ii) * * *

(G) A child placed in the custody of a service member by a court or recognized adoption agency on or after October 5, 1994, in anticipation of a legal adoption.

* * * * *

(3) *Enrollment.*

(i) *Basic active duty dependents dental benefit plan.* The dependent dental plan is effective from August 1, 1987, up to the date of implementation of the Expanded Active Duty Dependents Dental Benefit Plan.

(A) *Initial enrollment.* Eligible dependents of members on active duty status as of August 1, 1987 are automatically enrolled in the Active Duty Dependents Dental Plan, except where any of the following conditions apply:

(*1*) Remaining period of active duty at the time of contemplated enrollment is expected by the active duty member or the Uniformed Service to be less than two years, except that such members' dependents may be enrolled during the initial enrollment period for benefits beginning August 1, 1987 provided that the member had at least six months remaining in the initial enlistment term. Enrollment of dependents is for a period of 24 months, subject to the exceptions provided in paragraph (c)(5) of this section.

(*2*) Active duty member had completed an election to disenroll his or her dependents from the Basic Active Duty Dependents Dental Benefit Plan.

(*3*) Active duty member had only one dependent who is under four years of age as of August 1, 1987, and the member did not complete an election form to enroll the child.

(B) *Subsequent enrollment.* Eligible active duty members may elect to enroll their dependents for a period of not less than 24 months, provided there is an intent to remain on active duty for a period of not less than two years by the member and the Uniformed Service.

(C) *Inclusive family enrollment.* All eligible dependents of the active duty member must be enrolled if any were enrolled, except that a member may elect to enroll only those dependents who are remotely located from the member (e.g., a child living with a divorced spouse or a child in college).

(ii) *Expanded active duty dependents dental benefit plan.* The expanded dependents dental plan is effective on August 1, 1993. The Basic Active Duty Dependents Dental Benefit Plan terminated upon implementation of the expanded plan.

(A) *Initial enrollment.* Enrollment in the Expanded Active Duty Dependents Dental Benefit Plan is automatic for all eligible dependents of active duty members known to have at least 24 months remaining in service, and for those dependents enrolled in the Basic Dependents Dental Benefit Plan regardless of the military member's remaining time in service unless the active duty member elects to disenroll his or her dependents during the one-time disenrollment option period (one-month period before the date on which the expanded plan went into effect, and for 4 months after the beginning date). Those active duty members who intend to remain in the service for 24 months or more, whose dependents were not automatically enrolled, may enroll them at their military personnel office by completing the appropriate Uniformed Services Active Duty Dependents Dental Plan Enrollment Election Form. Use of the new plan during the one-time disenrollment option period by a dependent enrolled in the Basic Active Duty Dependents Dental Benefit Plan, constitutes acceptance of the plan by the military sponsor and his or her family. Once the new plan is used, the family cannot be disenrolled, and the premiums will not be refunded.

(B) *Subsequent enrollment.* Eligible active duty members may elect to enroll their dependents for a period of not less than 24 months, provided there is an intent to remain on active duty for a period of not less than two years by the member and the Uniformed Service.

(C) *Inclusive family enrollment.* All eligible dependents of the active duty member must be enrolled if any are enrolled, except as defined in paragraphs (c)(3)(ii)(C) (*1*) and (*2*) of this section.

(*1*) Enrollment will be by either single or family premium as defined herein:

(*i*) *Single premium.*

(*A*) Sponsors with only one family member age four (4) or older who elect to enroll that family member; or

(*B*) Sponsors who have more than one family member under age four (4) may elect to enroll one (1) family member under age four (4); or

(*C*) Sponsors who elect to enroll one (1) family member age four or older but may have any number of family members under age four (4) who are not

elected to be covered. At such time when the sponsor elects to enroll more than one (1) eligible family member, regardless of age, the sponsor must then enroll under a family premium which covers all eligible family members.

(*ii*) *Family premium.*

(*A*) Sponsors with two (2) or more eligible family members age four (4) or older must enroll under the family premium.

(*B*) Sponsors with one (1) eligible family member age four (4) or older and one (1) or more eligible family members under the age of four may elect to enroll under a family premium.

(*C*) Under the family premium, all eligible family members of the sponsor are enrolled.

(*2*) *Exceptions.*

(*i*) A sponsor may elect to enroll only those eligible family members residing in one location when the sponsor has other eligible family members residing in two or more physically separate locations (e.g., children living with a divorced spouse; children attending college).

(*ii*) Instances where a family member requires hospital or special treatment environment (due to a medical, physical handicap, or mental condition) for dental care otherwise covered by the dental plan, the family member may be excluded from the dental plan enrollment and may continue to receive care from a military treatment facility.

(D) *Enrollment period.* Enrollment of dependents is for a period of 24 months except when:

(*1*) The dependent's enrollment is based on his or her enrollment in the Basic Active Duty Dependents Dental Benefit; or

(*2*) One of the conditions for disenrollment in paragraph (c)(5) of this section is met.

(4) *Beginning dates of eligibility.*

(i) *Basic active duty dependents dental benefit plan.*

(A) *Initial enrollment.* The beginning date of eligibility for benefits is August 1, 1987.

(B) *Subsequent enrollment.* The beginning date of eligibility for benefits is the first day of the month following the month in which the election of enrollment is completed, signed, and received by the active duty member's Service representative, except that the date of eligibility shall not be earlier than September 1, 1987.

(ii) *Expanded active duty dependents dental benefit plan.*

(A) *Initial enrollment.* The beginning date of eligibility for benefits is April 1, 1993.

(B) *Subsequent enrollment.* The beginning date of eligibility for benefits is the first day of the month following the month in which the election of enrollment is completed, signed, and received by the active duty member's Service representative, except that the date of eligibility shall not be earlier than the first of the month following the month of implementation of the expanded benefit.

* * * * *

(5) * * *

(iv) *Disenrollment because of no eligible dependents.* When an active duty member ceases to have any eligible dependents, the member must disenroll.

(v) *Option to disenroll as a result of a change in active duty station.* When an active duty member transfers with enrolled family members to a duty station where space-available dental care is readily available at the local military clinic, the member may elect within 90 days of the transfer to disenroll from the plan. If the member is later transferred to a duty station where dental care is not available in the local military clinic, the member may re-enroll his or her dependents in the plan.

* * * * *

(8) *Continuation of eligibility for dependents of service members who die on active duty.* Eligible dependents of service members who die on or after October 1, 1993, while on active duty for a period of more than 30 days and who are enrolled in the dental benefits plan on the date of the death of the member shall be eligible for continued enrollment in the dental benefits plan for up to one year from the date of the service member's death.

* * * * *

(e) * * *

(1) * * *

(i) *Scope of benefits.* The Active Duty Dependents Dental Benefit Plan provides coverage for diagnostic and preventive services, sealants, restorative services, endodontics, periodontics, prosthodontics, orthodontics and oral surgery to eligible, enrolled dependents of active duty members as set forth in paragraph (c) of this section.

* * * * *

(2) *Benefits.*

(i) *Diagnostic and preventive services.* Benefits may be extended for those dental services described as oral examination, diagnostic, and preventive services defined as traditional prophylaxis (i.e., scaling deposits from teeth, polishing teeth, and topical application of fluoride to teeth) when performed directly by dentists or dental hygienists as authorized under paragraph (f) of this section. These services are defined (subject to the dental plan's exclusions, limitations, and benefit determination rules approved by OCHAMPUS) using the American Dental Association's Code on Dental Procedures and Nomenclature as listed in the Current Dental Terminology manual to include the following categories of services:

(A) *Diagnostic services.*

(*1*) Clinical Oral examinations.

(*2*) Radiographs.

(*3*) Tests and laboratory examinations.

(B) *Preventive services.*

(*1*) Dental prophylaxis.

(*2*) Topical fluoride treatment (office procedure).

(*3*) Sealants.

(*4*) Space maintenance (passive appliances).

(ii) *Adjunctive general services (services ''by report'').* The following categories of services are authorized when performed directly by dentists or dental hygienists only in unusual circumstances requiring justification of exceptional conditions directly related to otherwise authorized procedures. Use of the procedures may not result in the fragmentation of services normally included in a single procedure. These services are defined (subject to the dental plan's exclusions, limitations, and benefit determination rules as adopted by OCHAMPUS) using the American Dental Association's Code on Dental Procedures and Nomenclature as listed in the Current Dental Terminology manual to include the following categories of service:

(A) Emergency oral examinations.

(B) Palliative emergency treatment of dental pain.

(C) Professional consultation.

(D) Professional visits.

(E) Drugs.

(F) Post-surgical complications.

(iii) *Restorative.* Benefits may be extended for basic restorative services when performed directly by dentists or dental hygienists, or under orders and supervision by dentists, as authorized under paragraph (f) of this section. These services are defined (subject to the dental plan's exclusions, limitations, and benefit determination rules as adopted by OCHAMPUS) using the American Dental Association's Code on Dental Procedures and Nomenclature as listed in the Current Dental Terminology manual to include the following categories of services:

(A) *Restorative services.*

(*1*) Amalgam restorations.

(*2*) Silicate restorations.

(*3*) Resin restorations.

(*4*) Prefabricated crowns.

(*5*) Pin retention.

(B) *Other restorative services.*

(*1*) Diagnostic casts.

(*2*) Onlay restoration—metallic.
(*3*) Crowns.
(iv) *Endodontic services.* Benefits may be extended for those dental services involved in treatment of diseases and injuries affecting the dental pulp, tooth root, and periapical tissue when performed directly by dentists as authorized under paragraph (f) of this section. These services are defined (subject to the dental plan's exclusions, limitations, and benefit determination rules as adopted by OCHAMPUS) using the American Dental Association's Code on Dental Procedures and Nomenclature as listed in the Current Dental Terminology manual to include the following categories of services:
(A) Pulp capping—indirect.
(B) Pulpotomy.
(C) Root canal therapy.
(D) Periapical services.
(E) Hemisection.
(v) *Periodontic services.* Benefits may be extended for those dental services involved in prevention and treatment of diseases affecting the supporting structures of the teeth to include periodontal prophylaxis, gingivectomy or gingivoplasty, gingival curettage, etc., when performed directly by dentists as authorized under paragraph (f) of this section. These services are defined (subject to the dental plan's exclusions, limitations, and benefit determination rules as adopted by OCHAMPUS) using the American Dental Association's Code on Dental Procedures and Nomenclature as listed in the Current Dental Terminology manual to include the following categories of services:
(A) Surgical services.
(B) Periodontal scaling and root planing.
(C) Unscheduled dressing change.
(vi) *Prosthodontic services.* Benefits may be extended for those dental services involved in fabrication, insertion, adjustment, relinement, and repair of artificial teeth and associated tissues to include removable complete and partial dentures, fixed crowns and bridges when performed directly by dentists as authorized under paragraph (f) of this section. These services are defined (subject to the dental plan's exclusions, limitations, and benefit determination rules as adopted by OCHAMPUS) using the American Dental Association's Code on Dental Procedures and Nomenclature as listed in the Current Dental Terminology manual to include the following categories of services:
(A) *Prosthodontics (removable).*
(*1*) Complete/partial dentures.
(*2*) Adjustments to removable prosthesis.
(*3*) Repairs to complete/partial dentures.
(*4*) Denture rebase procedures.
(*5*) Denture reline procedures.
(*6*) Interim complete/partial dentures.
(*7*) Tissue conditioning.
(B) *Prosthodontics (fixed).*
(*1*) Bridge pontics.
(*2*) Retainers (by report).
(*3*) Bridge retainers-crowns.
(*4*) Other fixed prosthetic services.
(vii) Orthodontic services. Benefits may be extended for the supervision, guidance, and correction of growing or mature dentofacial structures, including those conditions that require movement of teeth or correction of malrelationships and malformations through the use of orthodontic procedures and devices when performed directly by dentists as authorized under paragraph (f) of this section to include in-process orthodontics. Coverage of in-process orthodontics is limited to services rendered on or after the date of enrollment in the expanded dependents dental play. These services are defined (subject to the dental plan's exclusions, limitations, and benefit determination rules as adopted by OCHAMPUS) using the American Dental Association's Code on Dental Procedures and Nomenclature as listed in the Current Dental Terminology manual to include the following categories of services:
(A) Minor treatment for tooth guidance.
(B) Minor treatment to control harmful habits.
(C) Interceptive orthodontic treatment.
(D) Comprehensive orthodontic treatment—transitional dentition.
(E) Comprehensive orthodontic treatment—permanent dentition.
(F) Treatment of the atypical or extended skeletal case.
(G) Post-treatment stabilization.
(viii) *Oral surgery services.* Benefits may be extended for basic surgical procedure of the extraction, reimplantation, stabilization and repositioning of teeth, alveoloplasties, incision and drainage of abscesses, suturing of wounds, biopsies, etc., when performed directly by dentists as authorized under paragraph (f) of this section. These services are defined (subject to the dental plan's exclusions, limitations, and benefit determination rules as adopted by OCHAMPUS) using the American Dental Association's Code on Dental Procedures and Nomenclature as listed in the Current Dental Terminology manual to include the following categories of services:
(A) Extractions.
(B) Surgical extractions.
(C) Other surgical procedures.
(D) Alveoloplasty—surgical preparation of ridge for denture.
(E) Surgical incision and drainage of abscess—intraoral soft tissue.
(F) Repair of traumatic wounds.
(G) Complicated suturing.
(H) Excision of pericoronal gingiva.
(ix) *Exclusion of adjunctive dental care.* Under limited circumstances, benefits are available for dental services and supplies under CHAMPUS when the dental care is medically necessary in the treatment of an otherwise covered medical (not dental) condition, is an integral part of the treatment of such medical condition, and is essential to the control of the primary medical condition; or is required in preparation for, or as the result of, dental trauma which may be or is caused by medically necessary treatment of an injury or disease (iatrogenic). These benefits are excluded under the Active Duty Dependents Dental Plan. For further information on adjunctive dental care benefits under CHAMPUS, see § 199.4(e)(10).
(x) *Exclusion of benefit services performed in military dental care facilities.* Except for emergency treatment, dental care provided outside the United States, and services incidental to noncovered services, dependents enrolled in the Active Duty Dependents Dental Plan may not obtain those services which are benefits of the Plan in military dental care facilities. Enrolled dependents may continue to obtain noncovered services from military dental care facilities subject to the provisions for space available care.
(xi) *Benefit limitations and exclusions.* The Director, OCHAMPUS or designee may establish such exclusions and limitations as are consistent with those established by dental insurance and prepayment plans to control utilization and quality of care for the services and items covered by this dental plan.
(3) *Beneficiary and sponsor liability.*
(i) *Diagnostic and preventive services.* Enrolled dependents of active duty members or their sponsors are responsible for the payment of only those amounts which are for services rendered by nonparticipating providers of care which exceed the equivalent of the statewide or regional prevailing fee levels as established by the insurer, except in the case of sealants where the dependents or their sponsors will also be responsible for payment of 20 percent of the insurer's determined allowable amount. Where the dental plan is unable to identify a participating provider of care within 35 miles of the dependent's place of residence with appointment availability within 21 calendar days, the dental plan will reimburse the dependent, or sponsor, or

the nonparticipating provider selected by the dependent within 35 miles of the dependent's place of residence at the level of the provider's usual fees less 20 percent of the insurer's allowable amount for sealants.

(ii) *Restorative services.* Enrolled dependents of active duty members or their sponsors are responsible for payment of 20 percent of the amounts determined by the insurer for services rendered by participating providers of care, or 20 percent of these amounts plus any remainder of the charges made by nonparticipating providers of care, except in the case of crowns and casts where the dependents or their sponsors will be responsible for payment of 50 percent of the insurer's determined allowable amount. Where the dental plan is unable to identify a participating provider of care within 35 miles of the dependent's place of residence with appointment availability within 21 calendar days, dependents or their sponsors are responsible for payment of 20 percent (50 percent in the case of crowns and casts) of the charges made by nonparticipating providers located within 35 miles of the dependent's place of residence.

(iii) *Endodontic, periodontic, and oral surgery services.* Enrolled dependents of active duty members or their sponsors are responsible for payment of 40 percent of the amounts determined by the insurer for services rendered by participating providers of care, or 40 percent of these amounts plus any remainder of the charges made by nonparticipating providers of care. Where the dental plan is unable to identify a participating provider of care within 35 miles of the dependent's place of residence with appointment availability within 21 calendar days, dependents or their sponsors are responsible for payment of 40 percent of the charges made by nonparticipating providers located within 35 miles of the dependent's place of residence.

(iv) *Prosthodontic and orthodontic services.* Enrolled dependents of active duty members or their sponsors are responsible for payment of 50 percent of the amounts determined by the insurer for services rendered by participating providers of care, or 50 percent of these amounts plus any remainder of the charges made by nonparticipating providers of care. Where the dental plan is unable to identify a participating provider of care within 35 miles of the dependent's place of residence with appointment availability within 21 calendar days, dependents or their sponsors are responsible for payment of 50 percent of the charges made by nonparticipating providers located within 35 miles of the dependent's place of residence.

(v) *Adjunctive general services (services ''by report'').* The beneficiary or sponsor liability is dependent on the particular service provided. Emergency oral examinations and palliative emergency treatment of dental pain are paid in full except for those amounts for services rendered by nonparticipating providers of care which exceed the equivalent of the statewide or regional prevailing fee levels as established by the insurer which are the responsibility of the enrolled dependents or their sponsors. Enrolled dependents or their sponsors are responsible for payment of 20 percent of the amounts determined by the insurer for professional consultations/visits and postsurgical services and 50 percent for covered medications when provided by participating providers of care, or these percentage payments plus any remaining amounts in excess of the prevailing charge limits established by the insurer for services rendered by nonparticipating providers, subject to the exceptions for dependent lack of access to participating providers as provided in paragraphs (e)(3)(i) through (e)(3)(iv) of this section. The contracting dental insurer may recognize a ''by report'' condition by providing additional allowance to the primary covered procedure instead of recognizing or permitting a distinct billing for the ''by report'' service.

(vi) *Amounts over the dental insurer's established allowance for charges.* It is the responsibility of the dental plan insurer to determine allowable charges for the procedures identified as benefits of this plan. All benefits of the plan are based on the insurer's determination of the allowable charges, subject to the exceptions for lack of access to participating providers as provided in paragraphs (e)(3)(i) through (e)(3)(iv) of this section.

(vii) *Maximum coverage amounts.* Enrolled dependents of active duty members are subject to an annual maximum coverage amount for non-orthodontic dental benefits and a lifetime maximum coverage amount for orthodontics as established by the Secretary of Defense or designee.

(f) * * *

(1) * * *

(ii) *Conflict of interest.* See § 199.9(d).

* * * * *

(vi) *Participating provider.* An authorized provider may elect to participate and accept the fee or charge determinations as established and made known to the provider by the dental plan insurer. The fee or charge determinations are binding upon the provider in accordance with the dental plan insurer's procedures for participation. The authorized provider may not participate on a claim-by-claim basis. The participating provider must agree to accept, within one day of a request for appointment, beneficiaries in need of emergency palliative treatment. Payment to the participating provider is based on the lower of the actual charge or the insurer's determination of the allowable charge. Payment is made directly to the participating provider, and the participating provider may only charge the beneficiary the percent cost-share of the insurer's allowable charge for those benefit categories as specified in paragraphs (e)(3)(i) through (e)(3)(v) of this section, in addition to the charges for any services not authorized as benefits.

(vii) *Nonparticipating provider.* An authorized provider may elect for all beneficiaries not to participate and request the beneficiary or sponsor to pay any amount of the provider's billed charge in excess of the dental plan insurer's determination of allowable charges. Neither the government nor the dental plan insurer shall have any responsibility for any amounts over the allowable charges as determined by the dental plan insurer, except where the dental plan insurer is unable to identify a participating provider of care within 35 miles of the dependent's place of residence with appointment availability within 21 calendar days. In such instances of the nonavailability of a participating provider, the nonparticipating provider located within 35 miles of the dependent's place of residence shall be paid his or her usual fees, less the percent cost-share as specified in paragraphs (e)(3)(i) through (e)(3)(v) of this section.

(A) *Assignment.* A nonparticipating provider may accept assignment of claims for beneficiaries certifying their willingness to make such assignment by filing the claims completed with the assistance of the beneficiary or sponsor for direct payment by the dental plan insurer to the provider.

(B) *Nonassignment.* A nonparticipating provider for all beneficiaries may request the beneficiary or sponsor to file the claim directly with the dental plan insurer, making arrangements with the beneficiary or sponsor for direct payment by the beneficiary or sponsor.

* * * * *

(6) * * *

(i) Nonparticipating providers (or the dependents or sponsors for unassigned claims) shall be reimbursed at the

equivalent of not less than the 50th percentile of prevailing charges made for similar services in the same locality (region) or state, or the provider's actual charge, whichever is lower; less any cost-share amount due for authorized services, except where the dental plan insurer is unable to identify a participating provider of care within 35 miles of the dependent's place of residence with appointment availability within 21 calendar days. In such instances of the nonavailability of a participating provider, the nonparticipating provider located within 35 miles of the dependent's place of residence shall be paid his or her usual fees, less the cost-share for the authorized services.

(ii) Participating providers shall be reimbursed at the equivalent of a percentile of prevailing charges sufficiently above the 50th percentile of prevailing charges made for similar services in the same locality (region) or state as to constitute a significant financial incentive for participation, or the provider's actual charge, whichever is lower; less any cost-share amount due for authorized services.

(g) * * *

(2) *Benefit payments made to a participating provider.* When the authorized provider has elected to participate in accordance with the arrangement and procedures established by the dental plan insurer, payment is made based on the lower of the actual charge or the insurer's determination of the allowable charge. Payment is made directly to the participating provider as payment in full, less the percent cost-share of the insurer's allowable charge as specified in paragraphs (e)(3)(i) through (e)(3)(v) of this section.

(3) *Benefit payments made to a nonparticipating provider.* When the authorized provider has elected not to participate in accordance with the arrangement and procedures established by the dental plan, payment is made by the insurer based on the lower of the actual charge or the insurer's determination of the allowable charge. The beneficiary is responsible for payment of a percent cost-share of the insurer's allowable charge as specified in paragraphs (e)(3)(i) through (e)(3)(v) of this section. Where the dental plan is unable to identify a participating provider of care within 35 miles of the dependent's place of residence with appointment availability within 21 calendar days, dependents or their sponsors are responsible for payment of a percent cost-share of the charges made by nonparticipating providers located within 35 miles of the dependent's place of residence as specified in paragraphs (e)(3)(i) through (e)(3)(v) of this section.

* * * * *

Dated: October 26, 1995.

L.M. Bynum,

Alternate OSD Federal Register Liaison Officer, Department of Defense.

[FR Doc. 95–27116 Filed 10–31–95; 8:45 am]

BILLING CODE 5000–04–M

DEPARTMENT OF TRANSPORTATION

Coast Guard

33 CFR Parts 100 and 165

[CGD 95–082]

Safety Zones, Security Zones, and Special Local Regulations

AGENCY: Coast Guard, DOT.

ACTION: Notice of temporary rules issued.

SUMMARY: This document provides required notice of substantive rules adopted by the Coast Guard and temporarily effective between July 1, 1995 and September 30, 1995, which were not published in the Federal Register. This quarterly notice lists temporary local regulations, security zones, and safety zones, which were of limited duration and for which timely publication in the Federal Register was not possible.

DATES: This notice lists temporary Coast Guard regulations that became effective and were terminated between July 1, 1995 and September 30, 1995, as well as several regulations which were not included in the previous quarterly list.

ADDRESSES: The complete text of these temporary regulations may be examined at, and is available on request from, Executive Secretary, Marine Safety Council (G–LRA), U.S. Coast Guard Headquarters, 2100 Second Street, SW., Washington, DC 20593–0001.

FOR FURTHER INFORMATION CONTACT: Commander Stephen J. Darmody, Executive Secretary, Marine Safety Council at (202) 267–1477 between the hours of 8 a.m. and 3 p.m., Monday though Friday.

SUPPLEMENTARY INFORMATION: District Commanders and Captains of the Port (COTP) must be immediately responsive to the safety needs of the waters within their jurisdiction; therefore District Commanders and COTPs have been delegated the authority to issue certain local regulations. Safety zones may be established for safety or environmental purposes. A safety zone may be stationary and described by fixed limits or it may be described as a zone around a vessel in motion. Security zones limit access to vessels, ports, or waterfront facilities to prevent injury or damage. Special local regulations are issued to assure the safety of participants and spectators at regattas and other marine events. Timely publication of these regulations in the Federal Register is often precluded when a regulation responds to an emergency, or when an event occurs without sufficient advance notice. However, the affected public is informed of these regulations through Local Notices to Mariners, press releases, and other means. Moreover, actual notification is provided by Coast Guard patrol vessels enforcing the restrictions imposed by the regulation.

Because mariners are notified by Coast Guard officials on-scene prior to enforcement action, Federal Register notice is not required to place the special local regulation, security zone, or safety zone in effect. However, the Coast Guard, by law, must publish in the Federal Register notice of substantive rules adopted. To discharge this legal obligation without imposing undue expense on the public, the Coast Guard periodically publishes a list of these temporary special local regulations, security zones, and safety zones. Permanent regulations are not included in this list because they are published in their entirety in the Federal Register. Temporary regulations may also be published in their entirety if sufficient time is available to do so before they are placed in effect or terminated. These safety zones, special local regulations and security zones have been exempted from review under E.O. 12866 because of their emergency nature, or limited scope and temporary effectiveness.

The following regulations were placed in effect temporarily during the period July 1, 1995 and September 30, 1995, unless otherwise indicated.

Dated: October 26, 1995.

Stephen J. Darmody,

Commander, U.S. Coast Guard, Executive Secretary, Marine Safety Council, Acting.

QUARTERLY REPORT

Docket No.	Location	Type	Effective date
Charleston 95–040	Lake Wylie, SC	Safety Zone	7/4/95
Corpus Christi 95–001	Gulf Intracoastal Waterway	Safety Zone	7/2/95
Corpus Christi 95–002	Corpus Christi Ship Channel	Safety Zone	7/17/95
Corpus Christi 95–003	Gulf Intracoastal Waterway	Safety Zone	7/24/95
Galveston 95–002	Galveston Bay, TX	Safety Zone	8/23/95
Galveston 95–003	Galveston Bay, TX	Safety Zone	8/27/95
Hampton Roads 95–042	Chesapeake Bay, Hampton Roads, VA	Safety Zone	7/7/95
Hampton Roads 95–045	Chesapeake Bay, Hampton Roads, VA	Safety Zone	7/17/95
Honolulu 95–004	Oahu, HI	Safety Zone	9/1/95
Houston 95–004	Channelview, TX	Safety Zone	7/5/95
Jacksonville 95–042	Indian River, Cocoa, FL	Safety Zone	7/4/95
Jacksonville 95–043	Halifax River, Ormond Beach, FL	Safety Zone	7/4/95
Jacksonville 95–044	Tolomato River, St. Augustine, FL	Safety Zone	7/4/95
Jacksonville 95–045	Indian River, Edgewater, FL	Safety Zone	7/4/95
Jacksonville 95–046	St. Johns River, Jacksonville, FL	Safety Zone	7/4/95
Jacksonville 95–053	Port Canveral, FL	Safety Zone	7/23/95
Jacksonville 95–058	St. Johns River, Jacksonville, FL	Safety Zone	9/2/95
LA/Long Beach 95–004	San Pedro Bay, CA	Safety Zone	8/4/95
LA/Long Beach 95–005	San Pedro Bay, CA	Safety Zone	8/4/95
LA/Long Beach 95–006	San Pedro Bay, CA	Safety Zone	8/24/95
LA/Long Beach 95–007	San Pedro Bay, CA	Safety Zone	9/25/95
Miami, FL 95–059	Miami River, Miami, FL	Safety Zone	9/5/95
Mobile 95–009	Pensacola, FL	Safety Zone	7/19/95
Mobile 95–010	Mobile Ship Channel, AL	Safety Zone	7/11/95
New Orleans 95–013	Mississippi River, M. 94 to M. 98	Safety Zone	5/13/95
New Orleans 95–014	Mississippi River, M. 94 to M. 98	Safety Zone	5/18/95
New Orleans 95–015	Mississippi River, M. 94 to M. 98	Safety Zone	5/19/95
New Orleans 95–016	Mississippi River, M. 94 to M. 98	Safety Zone	5/20/95
New Orleans 95–017	Mississippi River, M. 228.5 to M. 230.5	Safety Zone	5/20/95
New Orleans 95–019	Mississippi River, M. 429 to M. 434	Safety Zone	6/22/95
P.W. Sound 95–001	Prince William Sound, AK	Safety Zone	7/8/95
P.W. Sound 95–002	Prince William Sound, AK	Safety Zone	7/10/95
P.W. Sound 95–003	Prince William Sound, AK	Safety Zone	7/12/95
P.W. Sound 95–004	Prince William Sound, AK	Safety Zone	7/14/95
P.W. Sound 95–005	Prince William Sound, AK	Safety Zone	7/17/95
P.W. Sound 95–006	Prince William Sound, AK	Safety Zone	7/22/95
Philadelphia 95–021	West Deptford, NJ	Safety Zone	8/9/95
Philadelphia 95–022	Salem River, NJ	Safety Zone	8/13/95
Philadelphia 95–023	Gibbstown, NJ	Safety Zone	8/18/95
Philadelphia 95–024	Marcus Hook, PA	Safety Zone	8/21/95
Philadelphia 95–069	Wilmington, DE	Safety Zone	9/23/95
Philadelphia 95–070	Marcus Hook, PA	Safety Zone	9/22/95
Philadelphia 95–071	Wildwood, NJ	Safety Zone	9/27/95
San Francisco Bay 95–005	San Francisco Bay, CA	Safety Zone	7/4/95
San Francisco Bay 95–010	Carmel Bay, CA	Security Zone	9/3/95
San Juan 95–047	San Juan Harbor, PR	Safety Zone	7/4/95
Savannah 95–037	Skull Creek, Hilton Head, SC	Safety Zone	7/4/95
Savannah 95–038	Calibogue Sound, Hilton Head, SC	Safety Zone	7/4/95
Savannah 95–039	Savannah River, Savannah, GA	Safety Zone	7/4/95
Savannah 95–048	Savannah River, Savannah, GA	Safety Zone	7/6/95
St. Louis 95–011	Upper Mississippi River, M. 184	Safety Zone	9/26/95
Wilmington 95–002	Wilmington, NC	Safety Zone	9/2/95
01–95–019	Westport, CT	Safety Zone	7/3/95
01–95–020	Fairfield, CT	Safety Zone	7/1/95
01–95–041	Barons Cove, Sag Harbor, NY	Safety Zone	6/16/95
01–95–042	Stamford, CT	Safety Zone	7/1/95
01–95–043	Old Lyme, CT	Safety Zone	7/2/95
01–95–044	Montauk, NY	Safety Zone	7/2/95
01–95–045	Stratford, CT	Safety Zone	7/2/95
01–95–046	Groton, CT	Safety Zone	7/3/95
01–95–047	Cove Neck, NY	Safety Zone	7/4/95
01–95–048	East Hampton, NY	Safety Zone	7/15/95
01–95–049	Middletown, CT	Safety Zone	7/29/95
01–95–075	Hartford, CT	Safety Zone	7/1/95
01–95–084	Norwich, CT	Safety Zone	7/2/95
01–95–091	Middletown, CT	Safety Zone	7/4/95
01–95–095	Providence River, RI	Safety Zone	7/4/95
01–95–100	Raritan Bay, Staten Island, NY	Safety Zone	7/4/95
01–95–103	Waterford, CT	Safety Zone	7/15/95
01–95–104	Groton, CT	Safety Zone	7/8/95
01–95–105	Norwalk, CT	Safety Zone	7/3/95

QUARTERLY REPORT—Continued

Docket No.	Location	Type	Effective date
01–95–106	Babylon, NY	Safety Zone	7/1/95
01–95–107	Amagansett, NY	Safety Zone	7/1/95
01–95–108	Branford, CT	Safety Zone	7/1/95
01–95–112	Norwich, CT	Safety Zone	9/9/95
01–95–117	Hempstead, NY	Safety Zone	7/2/95
01–95–118	Wantagh, NY	Safety Zone	7/4/95
01–95–120	New Bedford, MA	Safety Zone	7/23/95
01–95–121	Boston, MA	Security Zone	7/22/95
01–95–125	Davis Park, NY	Safety Zone	7/29/95
01–95–126	Nissequogue, NY	Safety Zone	8/5/95
01–95–127	Camden, ME	Safety Zone	9/1/95
01–95–128	Kennebeck River, Bath, ME	Safety Zone	8/12/95
01–95–132	Hartford, CT	Safety Zone	8/12/95
01–95–133	Norwalk, CT	Safety Zone	8/12/95
01–95–140	Norwich, CT	Safety Zone	8/27/95
01–95–143	Upper New York Bay, NY	Safety Zone	9/12/95
01–95–144	Upper New York Bay, NY	Safety Zone	9/17/95
01–95–145	South Hampton, NY	Safety Zone	9/2/95
01–95–146	S.W. Harbor, ME	Safety Zone	9/9/95
01–95–148	Hudson River, NY	Safety Zone	9/23/95
02–95–008	Arkansas River, M. 308.4 to M. 309	Special Local	7/4/95
02–95–009	Mississippi River, M. 662 to M. 665	Special Local	7/4/95
02–95–010	Monongahela River, M. 101 to M. 101.2	Special Local	8/27/95
02–95–014	Mississippi River, M. 482.4 to M. 484	Special Local	9/16/95
05–95–041	Tar River, Washington, NC	Special Local	7/4/95
05–95–054	Camden, NJ	Special Local	9/30/95
05–95–059	Hampton Roads, VA	Anchorage Area	8/28/95
05–95–060	Hampton Roads, VA	Anchorage Area	8/30/95
07–95–035	Sarasota, FL	Special Local	7/1/95
07–95–036	Sarasota, FL	Special Local	7/2/95
07–95–041	Beaufort, SC	Special Local	7/15/95
07–95–051	Augusta, GA	Special Local	7/21/95
07–95–055	Jacksonville Beach, FL	Special Local	8/13/95
07–95–056	City of Palm Beach, FL	Special Local	9/16/95
09–95–019	Lake Ontario, Oswego Harbor, NY	Special Local	7/29/95
09–95–021	St. Joseph, MI	Special Local	7/14/95
13–95–031	Bellingham, WA	Safety Zone	7/6/95
13–95–032	Queets to Port of Benton, WA	Safety Zone	8/3/95
13–95–033	Queets to Port of Benton, WA	Safety Zone	8/9/95
13–95–034	Queets to Port of Benton, WA	Safety Zone	8/16/95
13–95–036	Bremerton to Queets, WA	Safety Zone	8/2/95
13–95–037	Bremerton to Queets, WA	Safety Zone	8/8/95
13–95–038	Bremerton to Queets, WA	Safety Zone	8/15/95
13–95–040	Portland, OR	Safety Zone	9/16/95
13–95–041	Queets to Port of Benton, WA	Safety Zone	9/7/95
13–95–042	Bremerton to Queets, WA	Safety Zone	9/5/95
13–95–043	Queets to Port of Benton, WA	Safety Zone	9/14/95
13–95–044	Bremerton to Queets, WA	Safety Zone	9/13/95
13–95–045	Tacoma, WA	Safety Zone	9/24/95

[FR Doc. 95–27107 Filed 10–31–95; 8:45 am]
BILLING CODE 4910–14–M

LIBRARY OF CONGRESS

Copyright Office

37 CFR Part 255

[Docket No. 95–2 CARP]

Cost of Living Adjustment of the Mechanical Royalty Rate

AGENCY: Copyright Office, Library of Congress.

ACTION: Final rule.

SUMMARY: The Copyright Office announces an adjustment of the mechanical royalty rate based on the change in the Consumer Price Index from September 1993 to September 1995. The rate is increased to either 6.95 cents, or 1.3 cents per minute of playing time or fraction thereof, whichever is larger.

EFFECTIVE DATE: January 1, 1996.

FOR FURTHER INFORMATION CONTACT: Marilyn J. Kretsinger, Acting General Counsel, or Tanya M. Sandros, Copyright Arbitration Royalty Panel, P.O. Box 70977, Southwest Station, Washington, D.C. 20024. Telephone: (202) 707–8380. Telefax: (202) 707–8366.

SUPPLEMENTARY INFORMATION: In 1987, the Copyright Royalty Tribunal adopted the joint proposal submitted by the National Music Publishers' Association, The Songwriters Guild of America and the Recording Industry Association of America, Inc. to make adjustments every two years to the mechanical royalty rate based upon changes in the Consumer Price Index (CPI), except: (1) when the CPI declined, in which case the mechanical rate could go no lower than the rates in effect in 1986–1987; and (2) when the CPI increased by more than 25%, in which case the rate increase

would be no greater than 25%. 52 FR 22637 (June 15, 1987). Corrected to clarify the adjustment to the mechanical rate when the CPI declined. 52 FR 23546 (June 23, 1987).

On December 17, 1993, the Copyright Royalty Tribunal was abolished by Congress. Copyright Royalty Tribunal Reform Act of 1993 (CRT Reform Act), Pub. L. 103–198, 107 Stat. 2304. The CRT Reform Act directed the Library of Congress and the Copyright Office to adopt the rules and regulations of the CRT as found at 37 CFR chapter 3. 17 U.S.C. 802(d). The Office subsequently reissued the CRT regulations on December 22, 1993. 58 FR 67690 (December 22, 1993).

Former 37 CFR 307.3, which calls for a biannual cost of living adjustment to the mechanical royalty rate, was renumbered 37 CFR 255.3 in a later action. 59 FR 23964 (May 9, 1994).

Accordingly, the Copyright Office announces that the change in the cost of living as determined by the Consumer Price Index (all urban consumers, all items) is 5.58% (September 1993's Index was 145.1 and September 1995's Index was 153.2, with 1982–1984=100 as a reference base). The current mechanical rate is 6.60 cents, or 1.25 cents per minute of playing time or fraction thereof, whichever amount is larger. Adjusting that rate upward by 5.58% and rounding off the results to the nearest 1/20th of a cent, the new rate, effective January 1, 1996, shall be 6.95 cents, or 1.3 cents per minute of playing time or fraction thereof, whichever amount is larger. Section 255.3 is revised as shown below.

List of Subjects in 37 CFR Part 255

Copyright, Music recordings.

For the reasons set forth in the preamble, the Copyright Office amends 37 CFR 255.3 as follows:

PART 255—ADJUSTMENT OF ROYALTY PAYABLE UNDER COMPULSORY LICENSE FOR MAKING AND DISTRIBUTING PHONORECORDS

1. The authority citation for Part 255 continues to read as follows:

Authority: 17 U.S.C. 801(b)(1) and 803.

2. Section 255.3 is revised to read as follows:

§ 255.3 Adjustment of Royalty Rate.

(a) For every phonorecord made and distributed on or after January 1, 1983, the royalty rate payable with respect to each work embodied in the phonorecord shall be either 4.25 cents, or 0.8 cent per minute of playing time or fraction thereof, whichever amount is larger, subject to further adjustment pursuant to paragraphs (b), (c), (d), (e), (f), (g), and (h) of this section.

(b) For every phonorecord made and distributed on or after July 1, 1984, the royalty rate payable with respect to each work embodied in the phonorecord shall be either 4.5 cents, or 0.85 cent per minute of playing time or fraction thereof, whichever amount is larger, subject to further adjustment pursuant to paragraphs (c), (d), (e), (f), (g), and (h) of this section.

(c) For every phonorecord made and distributed on or after January 1, 1986, the royalty rate payable with respect to each work embodied in the phonorecord shall be either 5.0 cents, or 0.95 cent per minute of playing time or fraction thereof, whichever amount is larger, subject to further adjustment pursuant to paragraphs (d), (e), (f), (g), and (h) of this section.

(d) For every phonorecord made and distributed on or after January 1, 1988, the royalty rate payable with respect to each work embodied in the phonorecord shall be either 5.25 cents, or 1.0 cent per minute of playing time or fraction thereof, whichever amount is larger, subject to further adjustment pursuant to paragraphs (e), (f), (g), and (h) of this section.

(e) For every phonorecord made and distributed on or after January 1, 1990, the royalty rate payable with respect to each work embodied in the phonorecord shall be either 5.7 cents, or 1.1 cents per minute of playing time or fraction thereof, whichever amount is larger, subject to further adjustment pursuant to paragraphs (f), (g), and (h) of this section.

(f) For every phonorecord made and distributed on or after January 1, 1992, the royalty rate payable with respect to each work embodied in the phonorecord shall be either 6.25 cents, or 1.2 cents per minute of playing time or fraction thereof, whichever amount is larger, subject to further adjustment pursuant to paragraphs (g), and (h) of this section.

(g) For every phonorecord made and distributed on or after January 1, 1994, the royalty rate payable with respect to each work embodied in the phonorecord shall be either 6.6 cents, or 1.25 cents per minute of playing time or fraction thereof, whichever amount is larger, subject to further adjustment pursuant to paragraph (h) of this section.

(h) For every phonorecord made and distributed on or after January 1, 1996, the royalty rate payable with respect to each work embodied in the phonorecord shall be either 6.95 cents, or 1.3 cents per minute of playing time or fraction thereof, whichever amount is larger.

Dated: October 24, 1995.

Marybeth Peters,

Register of Copyrights.

[FR Doc. 95–27054 Filed 10–31–95; 8:45 am]

BILLING CODE 1410–33–P

ENVIRONMENTAL PROTECTION AGENCY

40 CFR Part 52

[FRL–5320–6]

Availability of Federally-Enforceable State Implementation Plans for All States

AGENCY: Environmental Protection Agency (EPA).

ACTION: Notice of availability.

SUMMARY: Section 110(h) of the Clean Air Act, as amended in 1990 (the ''Act''), requires EPA by November 15, 1995, and every three years thereafter, to identify the Federally-enforceable State Implementation Plans (SIPs) in each State and to publish notice in the Federal Register of the availability of such documents. This document announces the availability of these SIP compilations for each State for public inspection.

EFFECTIVE DATE: November 1, 1995.

ADDRESSES: The regional offices may be contacted regarding requirements of applicable implementation plans for their States. The SIP compilations are available for public inspection during normal business hours at the appropriate EPA regional office listed below. Interested persons wanting to view these documents should make an appointment with the appropriate EPA office and arrange for a mutually agreeable time.

Region 1: Connecticut, Maine, Massachusetts, New Hampshire, Rhode Island, and Vermont.

Regional Contact: Emanuel Souza (617/565–3248), EPA, Air Pesticides and Toxics Division, John F. Kennedy Federal Building, One Congress Street, Boston, MA 02203

Region 2: New Jersey, New York, Puerto Rico, and Virgin Islands.

Regional Contacts: Kristeen Gaffney and Paul Truchan (212/637–4249), EPA, Air Programs Branch, 290 Broadway, New York, NY 10007–1866

Region 3: Delaware, District of Columbia, Maryland, Pennsylvania, Virginia, and West Virginia.

Regional Contact: Hal Frankford (215/597–1325), EPA, Air Programs Branch, 841 Chestnut Building, Philadelphia, PA 19107

Region 4: Alabama, Florida, Georgia, Kentucky, Mississippi, North Carolina, South Carolina, and Tennessee.

Regional Contact: Dick Schutt (404/347–3555, x4206), EPA, Air Programs Branch, 345 Courtland Street, N.E., Atlanta, GA 30365

Region 5: Illinois, Indiana, Michigan, Minnesota, Ohio, and Wisconsin.
Regional Contacts: Madelin Rucker for the States of Michigan, Minnesota and Wisconsin (312/886–0661); John Summerhays (312/886–6067) and Fayette Bright (312/886–6069) for the States of Illinois, Indiana, and Ohio.
EPA, Air and Radiation Division, 77 West Jackson Boulevard, Chicago, IL 60604–3507

Region 6: Arkansas, Louisiana, New Mexico, Oklahoma, and Texas.
Regional Contact: Bill Deese (214/665–7253), EPA, Multimedia Planning and Permitting Division, Air Planning Section (6PD-L), 1445 Ross Avenue, Suite 1200, Dallas, TX 75202–2733

Region 7: Iowa, Kansas, Missouri, and Nebraska.
Regional Contact: John Pawlowski (913/551–7920), EPA, Air and Toxics Division, Air Branch, 726 Minnesota Avenue, Kansas City, KS 66101

Region 8: Colorado, Montana, North Dakota, South Dakota, Utah, and Wyoming.
Regional Contact: Laurie Ostrand (303/293–1757), EPA, Air & Toxics Division, Air & Technical Operations Branch, 999 18th Street, Suite 500, Denver, CO 80202–2466

Region 9: Arizona, California, Hawaii, Nevada, American Samoa, and Guam.
Regional Contacts: Julie Rose (415/744–1184) and Cynthia Allen (415/744–1189), EPA, Air & Toxics Division, 75 Hawthorne Street, San Francisco, CA 94105

Region 10: Alaska, Idaho, Oregon, and Washington.
Regional Contact: Montel Livingston (206/553–0180), EPA, Office of Air (AT–082), 1200 6th Avenue, Seattle, WA 98101

SUPPLEMENTARY INFORMATION: National ambient air quality standards (NAAQS) are set for criteria pollutants, which are widespread common pollutants known to be harmful to human health and welfare. The present criteria pollutants are: Carbon monoxide, Lead, Nitrogen dioxide, Ozone, Particulate matter, and Sulfur oxides. See 40 CFR Part 50 for a technical description of how the levels of these standards are measured and attained. SIPs provide for implementation, maintenance, and enforcement of the standard in each air quality control region in the applicable states. The air quality control regions are described for each State in 40 CFR Part 81. According to the attainment status designation of an area, different regulations or programs in the SIP will apply.

States are required to develop SIPs containing strategies for controlling emissions from pollution sources. See 40 CFR Part 51—Requirements for Preparation, Adoption, and Submittal of Implementation Plans. SIPs are legal documents, formally adopted, committing States to carry out their air pollution control strategies and include regulations, which are both specific and enforceable, for sources of air pollution. These control strategies and regulations are submitted in accordance with the Act and, upon approval by EPA, become part of the current Federally-enforceable SIP. (See 40 CFR part 52—Approval and Promulgation of Implementation Plans (with Subparts presenting the status for each State and territory). The first section in the Subpart for each State is the ''Identification of plan'' section which provides chronological development of the State SIP. The identification of plan section identifies the State submitted rules which have been Federally approved. The goal of the State by State SIP compilation is to identify those rules under the ''Identification of plan'' section which are currently Federally enforceable. The other sections within the Subpart give the status of various SIP-required programs.)

SIPs may also include, among other elements, local air authority regulations and requirements concerning the control of criteria pollutants.

At the present time, some of the SIP compilations may not identify these other Federally enforceable elements.

The public should note that, when States have submitted their most current State regulations for inclusion into Federally-enforceable SIPs, EPA will begin its review process of submittals as soon as possible. Until EPA approves a submittal, State submitted regulations will be State-enforceable only; therefore, State-enforceable SIPs may exist which differ from Federally-enforceable SIPs. As EPA approves these State submitted regulations, the regional offices will continue to update the SIP compilations to include these applicable requirements.

This notice today informs the public and identifies the appropriate EPA regional offices to which the public may address questions of SIP availability and requirements.

Dated: October 20, 1995.

Carol M. Browner,

U.S. EPA Administrator.

[FR Doc. 95–26862 Filed 10–31–95; 8:45 am]

BILLING CODE 6560–50–P

40 CFR Part 70

[FRL–5323–5]

Clean Air Act Final Interim Approval of the Operating Permits Programs; San Luis Obispo County Air Pollution Control District, Santa Barbara County Air Pollution Control District, and Ventura County Air Pollution Control District, California

AGENCY: Environmental Protection Agency (EPA).

ACTION: Final interim approval.

SUMMARY: The EPA is promulgating interim approval of the Operating Permits Programs submitted by the California Air Resources Board on behalf of the San Luis Obispo County Air Pollution Control District, the Santa Barbara County Air Pollution Control District, and the Ventura County Air Pollution Control District for the purpose of complying with Federal requirements for an approvable State program to issue operating permits to all major stationary sources, and to certain other sources.

EFFECTIVE DATE: December 1, 1995.

ADDRESSES: Copies of the Districts' submittals and other supporting information used in developing the final interim approvals are available for inspection during normal business hours at the following location: Operating Permits Section, A–5–2, Air and Toxics Division, U.S. EPA-Region IX, 75 Hawthorne Street, San Francisco, California 94105.

FOR FURTHER INFORMATION CONTACT: For information on San Luis Obispo's program, contact Frances Wicher (telephone: 415/744–1250), Mail Code A–5–2, U.S. Environmental Protection Agency, Region IX, Air & Toxics Division, 75 Hawthorne Street, San Francisco, CA 94105. For information on Santa Barbara's program or Ventura's program, contact Martha Larson (telephone: 415/744–1238) at the same address.

SUPPLEMENTARY INFORMATION:

I. Background and Purpose

Title V of the 1990 Clean Air Act Amendments (sections 501–507 of the Act), and implementing regulations at 40 Code of Federal Regulations (CFR) part 70 require that States develop and submit operating permits programs to EPA by November 15, 1993, and that EPA act to approve or disapprove each program within one year after receiving the submittal. The EPA's program review occurs pursuant to section 502 of the Act and the part 70 regulations, which together outline criteria for

approval or disapproval. Where a program substantially, but not fully, meets the requirements of part 70, EPA may grant the program interim approval for a period of up to two years. If EPA has not fully approved a program by two years after the November 15, 1993 date, or by the end of an interim program, it must establish and implement a Federal program.

EPA proposed interim approval of San Luis Obispo's title V operating permits program on September 1, 1995 (60 FR 45685), Santa Barbara's program on July 10, 1995 (60 FR 35538), and Ventura's program on November 22, 1994 (59 FR 60104). In these Federal Register documents, EPA also proposed approval of each District's interim mechanism for implementing sections 112(g) and, under 112(l), its program for delegation of section 112 standards as promulgated. Public comment was solicited on all these proposed actions. EPA received comments on the proposed approval of Santa Barbara's and Ventura's operating permits program and is responding to these comments in this document. EPA did not receive any comments on its proposed interim approval of San Luis Obispo's program. The proposed actions to interimly approve the Districts' operating permit programs and approve their 112(g) and delegation mechanisms have not been altered as a result of public comment.

II. Final Action and Implications

A. Analysis of State Submissions

San Luis Obispo's title V operating permits program was submitted by the California Air Resources Board (CARB) on November 15, 1993. Additional material was submitted on February 18, 1994, and May 3, May 23 and August 21, 1995.

Santa Barbara's title V operating permits program was submitted by the CARB on November 15, 1993. Additional material was submitted on March 2, August 8, and December 8, 1994, and June 15, 1995.

Ventura's title V operating permits program was submitted by CARB on November 16, 1993. Additional material was submitted on December 6, 1993. Since the time that EPA proposed interim approval, Ventura has adopted regulations to implement title IV of the Act. On March 14, 1995, Ventura incorporated part 72 by reference into District Rule 34. Rule 34 was submitted to EPA on April 28, 1995.

EPA proposed interim approval of each District's program in accordance with § 70.4(d), on the basis that the program ''substantially meets'' part 70 requirements. The analyses of the Districts' programs in the proposed approvals remain unchanged and will not be repeated in this final document. The program deficiencies identified for each program in the proposed approvals also remain unchanged except for a change to Santa Barbara's interim approval issue related to the definition of title I modifications. This change is discussed in II.B.1.b. below. Each District must correct the program deficiencies listed in its proposed interim approval in order to receive full approval.

At the time of proposals for each District, EPA believed that an implementation agreement between EPA and each District would be completed prior to final interim approval. EPA and the Districts have not yet finalized implementation agreements but are working to do so as soon as practicable.

B. Public Comment

EPA received comments on the proposed interim approvals for Santa Barbara and Ventura. No comments were received on the proposed interim approval for San Luis Obispo.

1. Comments on the Proposed Interim Approval for Santa Barbara

EPA received comments on the proposed interim approval of the Santa Barbara program from two public commenters: Vandenberg Air Force Base (Vandenberg), and the Santa Barbara County Air Pollution Control District. These comments are discussed below.

a. Insignificant Activities. Vandenberg submitted comments regarding EPA's discussion of insignificant activities in the July 10, 1995 proposal notice. Primarily, Vandenberg requested that EPA clarify the requirements that Santa Barbara must meet with respect to insignificant activities for full approval of its part 70 program. Vandenberg commented that, because of the size of the Air Force Base, determinations of insignificant activities based on potential emissions and based on source category emissions rather than unit emissions would be burdensome, because the aggregated source-category emissions at Vandenberg would prevent any units from being determined to be insignificant. Vandenberg specifically asked (1) whether EPA required Santa Barbara to include insignificant emission levels and other ''gatekeepers'' in Rule XIII as well as providing documentation demonstrating that the activities listed in Rule 202 are insignificant, (2) whether the insignificant emission levels may be expressed in terms of actual emissions, and (3) whether insignificant emission levels were intended to be applied on a device basis or on a source category basis.

Section 70.4(b)(2) requires States to include in their part 70 programs any criteria used to determine insignificant activities or emission levels for the purpose of determining complete applications. Under part 70, a State must request and EPA must approve as part of that State's program any activity or emission level that the State wishes to consider insignificant. Santa Barbara submitted District Rule 202, its current permit exemption rule, as its list of insignificant activities. Santa Barbara did not provide EPA with criteria used to develop the exemptions list, information on the level of emissions from the activities, or with a demonstration that these activities are not likely to be subject to an applicable requirement.

Santa Barbara has two options with regards to insignificant activities. Under one option, Santa Barbara would provide a demonstration that activities exempted from permitting under Rule XIII (pursuant to Rule 202, the District's permit exemption list) are truly insignificant and are not likely to be subject to an applicable requirement. Santa Barbara's alternative would be to revise Rule XIII to include a restriction that may be used in conjunction with Rule 202 to define insignificant activities. Rule XIII would be revised to include District-established emission levels. These District-established levels must include separate emission levels for HAPs and for other regulated air pollutants. Santa Barbara would then only have to demonstrate that these emission levels are insignificant compared to the level of emissions from and type of units that are required to be permitted or subject to applicable requirements.

The District may establish insignificant emission levels in terms of actual or potential emissions, and may define insignificant activities either on a unit-by-unit basis, or a source-category basis. The emission levels, in conjunction with the insignificant activity list and the § 70.5(c) requirement that applications may not omit information needed to determine the applicability of, or to impose, any applicable requirement, or to evaluate the fees, would be used to define insignificant activities. Also note that emissions from insignificant activities must be included in determining whether a facility is a major source subject to title V.

In the proposed rulemaking EPA suggested insignificance levels that the

Agency would find acceptable without a further demonstration. EPA's limits are provided as an example of what may be acceptable. However, EPA clearly stated in the proposal notice that our request for comment on these proposed levels is not intended to restrict the ability of the District to propose and EPA to approve other emission levels if the District demonstrates that such alternative emission levels are insignificant compared to the levels of emission from types of units that are permitted or subject to applicable requirements.

EPA would like to note that Santa Barbara has the flexibility to modify its regulations and submit criteria for EPA approval of new exemptions, as long as the District demonstrates, or EPA is otherwise satisfied, that such alternative emission levels are insignificant compared to the level of emissions and types of units that are required to be permitted or subject to applicable requirements. EPA is not prohibiting Santa Barbara from setting its own limits, as long as limits are demonstrated to be truly insignificant and the activities or units are not likely to be subject to applicable requirements. With this understanding, one of Santa Barbara's options would be to revise its Rule 1301 definitions of ''insignificant emissions'' and ''insignificant emission levels'' to meet the part 70 requirements and to link the two definitions, so that insignificant emission levels are defined as criteria for determining insignificant activities. An option for revising Santa Barbara's definition of ''insignificant emission levels'' would be

'' 'Insignificant Emissions Levels' mean the emission levels that, for regulated air pollutants, are exempt from District permitting pursuant to Section A.3. of District Rule 202 and additionally for HAPs, do not exceed Section 112(g) de minimis levels or other title I significant modification levels for hazardous air pollutants and other toxics.''

b. Title I Modifications. The July 10, 1995 proposal notice identified Santa Barbara's omission of certain part 60 modifications from the definitions of ''title I (or major) modification'' and ''significant part 70 permit revision'' as an interim approval issue. See 60 FR 35538. Based on a June 15, 1995 commitment letter from Santa Barbara, EPA proposed that Santa Barbara must correct these definitions for full approval. Additionally, EPA required that Santa Barbara provide interpretive guidance demonstrating that all modifications under part 60 will be treated as significant permit modifications in order to receive final interim approval.

Santa Barbara commented to request that its final interim approval not be conditioned upon the District's issuing interpretive guidance explaining how all modifications under part 60 would be treated as significant permit modifications. Santa Barbara reiterated its June 15, 1995 commitment to issue this guidance. However, citing program rules, the District stated that it could not undertake this kind of activity prior to EPA's final interim approval of its part 70 operating permits program. Santa Barbara committed to having the interpretive guidance in place prior to revising any part 70 permits involving modifications under part 60.

Santa Barbara's definition of ''title I modification'' does not include modifications under part 60. Santa Barbara's definition of ''significant part 70 permit modification'' includes only ''Any equivalent or identical replacement of an emission unit that is subject to standards promulgated under CAA, section 111 or 112.'' Therefore, Santa Barbara's rule would not require all modifications under part 60 to be processed as significant permit revisions. Part 70 requires all modifications under title I of the Act to be processed as significant permit modifications (§ 70.7(e)(2)(i)(A)(5)). EPA's initial part 70 proposal (56 FR 21712) identified part 60 modifications as title I modifications.

Neither EPA's August 29, 1994 proposed revisions to part 70 (59 FR 44460) nor EPA's August 31, 1995 supplemental proposal (60 FR 45530) removes part 60 from the definition of ''title I modifications.'' The August 31, 1995 notice's proposed definition of ''title I modification'' includes a reference to 111(a)(4), which is the enabling legislation for part 60 modifications: ''Title I modification or modification under any provision of title I of the Act means any modification under parts C and D of title I or sections 111(a)(4), 112(a)(5), or 112(g) of the Act; under regulations promulgated by EPA thereunder or in 61.07 of part 61 of this chapter; or under State regulations approved by EPA to meet such requirements.'' EPA has determined that inclusion of part 60 modifications under the definition of title I modification, and thus under the definition of significant part 70 modification, is necessary for full approval. In the July 10, 1995 notice proposing interim approval of Santa Barbara's rule, EPA proposed that the interpretive guidance be issued prior to any permit modifications, and therefore required the issuance of this guidance as a condition of final interim approval. However, EPA is confident that, based on Santa Barbara's June 15, 1995 and August 9, 1995 commitments, Santa Barbara will implement its rule consistently with part 70's definition of title I modification. Through oversight, EPA will monitor the District's rule implementation, and any permit modification that does not treat part 60 modifications as significant permit modifications is subject to EPA objection. Therefore, EPA has determined that Santa Barbara's commitment is adequate for final interim approval.

2. Comments on the Proposed Interim Approval for Ventura

EPA received comments on the proposed interim approval of the Ventura County program from four public commenters: the National Environmental Development Association Clean Air Regulatory Project (NEDA/CARP), the American Forest & Paper Association (AF&PA), the California Air Resource Board (CARB), and the Ventura County Air Pollution Control District (APCD).

a. Section 112(g) Implementation. The APCD comments expressed concerns with implementing a 112(g) program prior to EPA's promulgation of 112(g) guidance. AF&PA and NEDA/CARP also commented that EPA should not approve use of the District's preconstruction permitting program for the purposes of implementing 112(g) prior to EPA's promulgation of a 112(g) rule. The AF&PA and NEDA/CARP objected to the implementation of 112(g) without EPA's guidance on de minimis emission increases, offsets, and applicability under 112(g). The AF&PA and NEDA/CARP believe that the District would not be able to appropriately determine applicability of MACT standards prior to promulgation of the 112(g) rule. AF&PA stated that the lack of guidance would cause the District to implement a 112(g) program in such a manner that could unfairly put sources at risk of enforcement action if it was later found that the District's implementation of 112(g) was not consistent with EPA's 112(g) rule.

Section 112(g)(2) of the Clean Air Act prohibits the construction, reconstruction, and modification of any major source of hazardous air pollutants after the effective date of a title V program unless the source meets MACT. EPA received many comments on 112(g) implementation and agrees that it is not reasonable to expect the States and Districts to implement section 112(g) before a Federal 112(g) rule is issued. EPA has therefore published an interpretive notice in the Federal Register regarding section 112(g) of the Act. 60 FR 8333 (February 14, 1995).

The interpretive notice outlines EPA's revised interpretation of section 112(g) applicability prior to EPA's issuing the final section 112(g) rule. The interpretive notice allows State and local agencies to decide whether to delay implementing 112(g) of the Act until EPA promulgates a final 112(g) rule unless they choose to implement the requirements of 112(g) as a matter of state or local law prior to EPA promulgation of the 112(g) rule. Major source modifications, constructions, and reconstructions will not be subject to section 112(g) requirements until the final rule is promulgated.

The interpretive notice further explains that EPA is considering whether the effective date of section 112(g) should be delayed beyond the date of promulgation of the Federal rule so as to allow States time to adopt rules implementing the Federal rule, and that EPA will provide for any such additional delay in the final section 112(g) rulemaking. Unless and until EPA provides for such an additional postponement of the effective date of section 112(g), Ventura must be able to implement section 112(g) during the period between promulgation of the Federal section 112(g) rule and adoption of implementing District regulations. Therefore, EPA is approving the use of Ventura's preconstruction program as an interim mechanism, as proposed.

However, since approval is intended solely to confirm that the District has a mechanism to implement section 112(g) during the transition period, the approval itself will be without effect if EPA decides in the final section 112(g) rule that there will be no transition period.

The APCD and CARB commented that EPA should allow at least 18 months, rather than 12 months, to develop section 112(g) regulations following EPA's promulgation of the Federal section 112(g) rule. The District stated that 12 months may not be sufficient time to both undergo the regulatory development process and prepare a section 112(l) equivalency package for approval of the District's regulation to be used in lieu of the Federal 112(g) rule. Additionally, CARB commented that, contingent upon a District submitting a 112(l) equivalency package within 18 months of EPA's promulgation of a 112(g) rule, EPA should extend the interim approval of the District's preconstruction permit program for implementing a 112(g) program until EPA has finally approved or disapproved the District's 112(l) submittal.

EPA has approved an 18-month transition period in other states and does not see a unique reason to limit Ventura, Santa Barbara or San Luis Obispo to 12 months. If in the final section 112(g) rule, however, the transition period is eliminated, the Districts must follow the implementation time lines set out in that rulemaking. In addition, EPA believes that, in most cases, 18 months will be an adequate period of time for (1) districts to adopt a 112(g) rule, (2) districts to make a complete submittal, (3) EPA to determine the submittal complete, and (4) EPA to approve the submittal under 112(l). Under EPA's 112(l) rule (''Approval of State Programs and Delegation of Federal Authority,'' 58 FR 62262), EPA is required to process a submittal within 6 months of determining the submittal complete. EPA believes that approval of a longer time period could inappropriately delay implementation of a 112(g) program.

b. Insignificant Activities. The APCD commented that the District's categorical permit exemption list should be accepted as its list of insignificant activities. The APCD stated that the list was a result of the District's experience over many years, and so represents the best approach to determining insignificant activities. AF&PA and NEDA/CARP also recommend that the District's current list be accepted.

EPA recognizes that information about insignificant emissions units may not be needed in some cases to assure compliance with all applicable requirements or to determine applicability. Therefore, part 70 allows state and local agencies to submit a list for approval of insignificant activities and emissions levels. This list must be accompanied with some sort of justification or selection criteria that assure insignificance with respect to Federal applicable requirements (section 70.4(b)(2)). The fact that the District has a preexisting exemption list does not constitute sufficient justification. As stated in the proposal, Ventura's program provided EPA with no criteria or information on the level of emissions from activities on the District's exemption lists. In addition, the specific insignificant activities provisions submitted by Ventura have raised concerns with EPA regarding the District's ability to ensure that applicable requirements are included in permits. Ventura did not provide EPA with a demonstration to the contrary. Because Ventura has not provided EPA with justification for each categorical exemption, EPA does not have adequate information on which to evaluate the activities, and cannot approve the District's exemption list.

The APCD commented that EPA's requirement that emission levels be set is impractical, because levels based on potential emissions would exempt few sources, while levels based on actual emissions would require that sources keep records to demonstrate emissions are below the levels, which would be burdensome.

EPA disagrees that setting emission levels is impractical or burdensome. These emission levels could be evaluated based on actual emissions, although demonstrations could also be made based upon potential emissions. Nothing in part 70 requires sources to keep ongoing records to demonstrate eligibility for insignificant activity status.

AF&PA and NEDA/CARP commented that EPA's suggested ''acceptable'' emissions levels are too stringent, and that EPA is not providing the District opportunity to define alternative thresholds, and that EPA has no authority to hold out ''suggested'' emission levels as a threshold for receiving full approval.

In the proposed rulemaking EPA suggested insignificance levels that the Agency would find acceptable even without a further demonstration. EPA's limits are provided as an example of what may be acceptable. However, EPA clearly stated in the proposal notice that its request for comment on these proposed levels ''is not intended to restrict the ability of the District to propose and EPA to approve other emission levels if the District demonstrates that such alternative emission levels are insignificant compared to the levels of emission from types of units that are permitted or subject to applicable requirements.''

EPA would like to note that Ventura has the flexibility to modify its regulations and submit criteria for EPA approval of new exemptions, as long as the District demonstrates, or EPA is otherwise satisfied, that such alternative emission levels are insignificant compared to the level of emissions and types of units that are permitted or subject to applicable requirements. EPA is not prohibiting Ventura from setting its own limits, as long as limits are demonstrated to be truly insignificant and not likely to be subject to an applicable requirement.

c. Title I Modifications. Ventura commented that ''title I modifications'' should not be interpreted to include minor NSR. NEDA/CARP and AF&PA supported EPA's decision that inclusion of minor NSR in the definition of ''title I modification'' not be an interim approval issue.

NEDA/CARP and AF&PA both contend that neither EPA nor the District has authority to include as ''title I modifications'' those changes made pursuant to a preconstruction permitting program approved under the SIP. Furthermore, the commenters state that requiring Ventura's program regulations to include the more encompassing definition of ''title I modification'' would constitute a revision to the Agency's current operating permits rule. However, both commenters support EPA's position of not making title I modifications an issue in granting interim approval to Ventura's title V program, and therefore are not asking for any changes to be made.

In an August 29, 1994 rulemaking proposal, the Agency solicited public comment on whether ''title I modifications'' should be interpreted to mean literally any change at a source that would trigger permitting authority review under regulations approved or promulgated under title I of the Act. (59 FR 44572, 44573). This would include State preconstruction review programs approved by EPA as part of the State Implementation Plan under section 110(a)(2)(C) of the Clean Air Act.

The EPA has not yet taken final action on the August 29, 1994 proposal. However, in response to public comment on that proposal, the Agency has decided that the definition of ''title I modifications'' is best interpreted as not including changes reviewed under minor NSR programs. This decision was announced in a June 20, 1995 letter from Mary D. Nichols, EPA Assistant Administrator for Air and Radiation, to Congressman John D. Dingell, and is published in a supplemental rulemaking proposal in the Federal Register. 60 FR 45530 (August 31, 1995). Thus, EPA expects to confirm that Ventura's definition of ''title I modification'' is fully consistent with part 70.

The August 29, 1994 action proposed to, among other things, allow State programs with a more narrow definition of ''title I modifications'' to receive interim approval (59 FR 44572). The Agency stated that if, after considering the public comments, it continued to believe that the phrase ''title I modifications'' should be interpreted as including minor NSR changes, it would revise the interim approval criteria as needed to allow states with a narrower definition to be eligible for interim approval. If EPA does conclude, during this rulemaking, that Title I modifications should be read to include minor NSR, it will implement the interim approval option spelled out in the August 29, 1994 proposal.

d. Emissions Trading. AF&PA and NEDA/CARP supported EPA's identification of emission trading as an interim approval issue. The commenters agreed that Ventura should be required to revise its regulation to provide for emission trading where an applicable requirement provides for trading increases and decreases without a case-by-case approval as a condition of full program approval. Ventura has commented that the District plans to revise its regulations to include applicable requirement emission trading.

e. Significant Changes to Monitoring Terms and Conditions. Ventura requested EPA's guidance in defining ''significant'' with respect to changes to monitoring terms and conditions. AF&PA and NEDA/CARP commented that this change should not be an interim approval issue, for the reasons that EPA has not adequately defined ''significant'' for these purposes, and because EPA has requested public comment on more flexible requirements for permit modifications due to significant changes to monitoring terms and conditions.

Part 70 does not specifically define ''significant'' with respect to significant modifications to monitoring terms and conditions. This gives permitting authorities discretion in determining which changes are considered to be ''significant.'' Part 70 does distinguish between ''significant'' changes, and ''relaxations'' to other types of permitting terms and conditions. Significant permit changes would encompass relaxations and other changes. EPA has not specifically defined the term ''significant''; however, EPA has given examples of how changes in monitoring terms and conditions would be classified with respect to permit modification tracks in EPA's response to comments on the proposed part 70 rule, (see ''Response to Comments on the 40 CFR Part 70 Rulemaking,'' Docket No. A–90–33), and also in the final part 70 rule.

EPA does not agree that this deficiency should be dropped as an interim approval issue pending the revisions to part 70. EPA proposed, in the August 31, 1995 Federal Register, to revise current part 70 requirements for permit modifications. See 60 FR 45530. However, EPA must approve current programs according to the existing part 70 rule until the time that the part 70 program is revised. Therefore, this remains an interim approval issue.

f. Modifications Prior to Permit Conditions. The APCD commented that requiring permit revisions to be made prior to the actual modifications is impractical because implementation of the actual change may necessitate further changes to the permit.

This comment goes to the structure of part 70 rather than the approvability of Ventura's program. Therefore, EPA believes that no change to EPA's proposed action on the approvability of Ventura's title V program is required in response to this comment. On August 31, 1995, EPA proposed a supplement to part 70 that includes revisions to the current permit modification procedures, with the opportunity for public comment (60 FR 45530). However, until revisions to part 70 are promulgated, all part 70 programs must be consistent with the current part 70 rule, which requires that, unless modifications are subject to section 112(g) or title I, parts C and D of the Act, and are not prohibited by the existing part 70 permit, significant permit modifications must be approved prior to their implementation.

B. Final Action

1. Interim Approvals

EPA is promulgating interim approval of the operating permit programs for San Luis Obispo County, Santa Barbara County, and Ventura County, California. The part 70 programs approved in this document apply to all part 70 sources (as defined in the approved program) within the each District including any title V sources on the outer continental shelf within 25 miles of shore, except any sources of air pollution over which an Indian Tribe has jurisdiction. *See, e.g.*, 59 FR 55813, 55815–55818 (November 9, 1994). The term ''Indian Tribe'' is defined under the Act as ''any Indian tribe, band, nation, or other organized group or community, including any Alaska Native village, which is Federally recognized as eligible for the special programs and services provided by the United States to Indians because of their status as Indians.'' *See* section 302(r) of the CAA; *see also* 59 FR 43956, 43962 (Aug. 25, 1994); 58 FR 54364 (Oct. 21, 1993).

These interim approvals, which may not be renewed, extend until December 1, 1997. During this interim approval period, each District is protected from sanctions, and EPA is not obligated to promulgate, administer and enforce a Federal operating permits program in any of these Districts. Permits issued under a program with interim approval have full standing with respect to part 70, and the 1-year time period for submittal of permit applications by subject sources begins upon the effective date of this interim approval, as does the 3-year time period for

processing the initial permit applications.

If any of the three Districts fails to submit a complete corrective program for full approval by June 2, 1997, EPA will start an 18-month clock for mandatory sanctions for that District. If the District then fails to submit a corrective program that EPA finds complete before the expiration of that 18-month period, EPA will be required to apply one of the sanctions in section 179(b) of the Act to the District and that sanction will remain in effect until EPA determines that the District has corrected the deficiency by submitting a complete corrective program. Moreover, if the Administrator finds a lack of good faith on the part of the District, both sanctions under section 179(b) will apply after the expiration of the 18-month period until the Administrator determines that the District has come into compliance. In any case, if, six months after application of the first sanction, the District still has not submitted a corrective program that EPA has found complete, a second sanction will be required.

If EPA disapproves a District's complete corrective program, EPA will be required to apply one of the section 179(b) sanctions on the date 18 months after the effective date of the disapproval, unless prior to that date the District has submitted a revised program and EPA has determined that it corrected the deficiencies that prompted the disapproval. Moreover, if the Administrator finds a lack of good faith on the part of the District, both sanctions under section 179(b) shall apply after the expiration of the 18-month period until the Administrator determines that the District has come into compliance. In all cases, if, six months after EPA applies the first sanction, the District has not submitted a revised program that EPA has determined corrects the deficiencies, a second sanction is required.

In addition, discretionary sanctions may be applied where warranted any time after the expiration of an interim approval period if the District has not submitted a timely and complete corrective program or EPA has disapproved its submitted corrective program. Moreover, if EPA has not granted full approval to the District's program by the expiration of this interim approval and that expiration occurs after November 15, 1995, EPA must promulgate, administer and enforce a federal permits program for the District upon interim approval expiration.

a. San Luis Obispo's Title V Operating Permits Program. The EPA is promulgating interim approval of San Luis Obispo's title V operating permits program. The program deficiencies described in the proposed rulemaking, under Section II.B.2., Interim Approval Issues for San Luis Obispo's Title V Operating Permits Program, and the legislative deficiency outlined under Section II.B.3., California Enabling Legislation—Legislative Source Category Limited Interim Approval Issue (see 60 FR 45685 (September 1, 1995)), must be corrected in order for the District to be granted full approval.

b. Santa Barbara's Title V Operating Permits Program. EPA is promulgating interim approval of Santa Barbara's operating permits program submitted on November 15, 1993, and amended March 2, August 8, and December 8, 1994, and June 15, 1995. Excepted as noted below, the program deficiencies described in the proposed rulemaking, under Section II.B.1., Santa Barbara's Title V Operating Permits Program, and the legislative deficiency outlined under Section II.B.2., California Enabling Legislation—Legislative Source Category Limited Interim Approval Issue (see 60 FR 35538 (July 10, 1995)), must be corrected in order for the District to be granted full approval. In response to comments received, EPA has modified the interim approval issued related to the definition of title I modifications (Issue *m* in the proposal). In addition to the other interim approval issues noted in the proposed approval, the District must make the following change to receive full approval:

Definition of Title I Modifications and Significant Part 70 Permit Modifications

Rule 1301 defines ''modification'' to include all modifications under 40 CFR part 60. However, the definitions of ''title I (or major) modification'' and ''significant part 70 permit modification'' do not clearly define all modifications under part 60 as title I modifications and do not clearly ensure they will be treated as significant permit modifications. See discussion in Section II.B.1.b. of this notice. Santa Barbara submitted a June 15, 1995 letter from Peter Cantle, Engineering Division Manager, Santa Barbara County Air Pollution Control District, committing to provide interpretive guidance demonstrating that all modifications under 40 CFR part 60 will be treated as significant permit modifications. In order to receive full approval, Santa Barbara must finalize and submit to EPA interpretive guidance demonstrating that all modifications under 40 CFR part 60 will be treated as significant permit modifications. Additionally, in order to receive full approval, Santa Barbara must clarify the definitions of ''title I (or major) modification'' and ''significant part 70 permit modification'' to include all modifications under 40 CFR part 60.

c. Ventura's Title V Operating Permits Program. The EPA is promulgating interim approval of Ventura's operating permits program submitted on November 16, 1993 and amended December 6, 1993. The program deficiencies described in the proposed rulemaking, under Section II.B.1., Ventura's Title V Operating Permits Program, and the legislative deficiency outlined under Section II.B.2., California Enabling Legislation—Legislative Source Category Limited Interim Approval Issue (see 59 FR 60104 (November 22, 1994)), must be corrected in order for the District to be granted full approval.

2. Districts' Preconstruction Permit Program Implementing Section 112(g)

EPA is approving the use of each District's preconstruction review program as a mechanism to implement section 112(g) during the transition period between promulgation of EPA's section 112(g) rule and adoption by each District of rules specifically designed to implement section 112(g). EPA is limiting the duration of this approval to 18 months following promulgation by EPA of the section 112(g) rule.

3. Program for Delegation of Section 112 Standards as Promulgated

Requirements for part 70 program approval, specified in 40 CFR section 70.4(b), encompass section 112(l)(5) requirements for approval of a program for delegation of section 112 standards as promulgated by EPA as they apply to part 70 sources. Section 112(l)(5) requires that a permitting authority's title V program contain adequate authorities, adequate resources for implementation, and an expeditious compliance schedule, which are also requirements under part 70. Therefore, EPA is also promulgating approval under section 112(l)(5) and 40 CFR section 63.91 of each of the District's programs for receiving delegation of section 112 standards that are unchanged from the federal standards as promulgated. These programs for delegations apply to both existing and future standards but is limited to sources covered by the part 70 program.

III. Administrative Requirements

A. Docket

Copies of submittal for San Luis Obispo, Santa Barbara, and Ventura as well as other information relied upon

for the final interim approvals are contained in docket numbers CA–SLO–95–01–OPS (for San Luis Obispo), CA–SB–95–1–OPS (for Santa Barbara), and CA–VT–94–1–OPS (for Ventura) maintained at the EPA Regional Office. Each docket is an organized and complete file of all the information submitted to, or otherwise considered by, EPA in the development of this final interim approval. The dockets are available for public inspection at the location listed under the **ADDRESSES** section of this document.

B. Executive Order 12866

The Office of Management and Budget has exempted this action from Executive Order 12866 review.

C. Regulatory Flexibility Act

The EPA's actions under sections 502 and 112 of the Act do not create any new requirements, but simply address operating permit programs submitted to satisfy the requirements of 40 CFR part 70. Because these actions do not impose any new requirements, they do not have a significant impact on a substantial number of small entities.

D. Unfunded Mandates

Under Section 202 of the Unfunded Mandates Reform Act of 1995 (''Unfunded Mandates Act''), signed into law on March 22, 1995, EPA must prepare a budgetary impact statement to accompany any proposed or final rule that includes a federal mandate that may result in estimated costs to state, local, or tribal governments in the aggregate; or to the private sector, of $100 million or more. Under Section 205, EPA must select the most cost-effective and least burdensome alternative that achieves the objectives of the rule and is consistent with statutory requirements. Section 203 requires EPA to establish a plan for informing and advising any small governments that may be significantly or uniquely impacted by the rule.

EPA has determined that the interim approval action promulgated today does not include a federal mandate that may result in estimated costs of $100 million or more to either state, local, or tribal governments in the aggregate, or to the private sector. This federal action approves pre-existing requirements under state or local law, and imposes no new federal requirements. Accordingly, no additional costs to state, local, or tribal governments, or to the private sector, result from this action.

List of Subjects in 40 CFR Part 70

Environmental protection, Administrative practice and procedure, Air pollution control, Hazardous substances, Intergovernmental relations, Operating permits, Reporting and recordkeeping requirements.

Dated: October 23, 1995.

Felicia Marcus,

Regional Administrator.

Part 70, title 40 of the Code of Federal Regulations is amended as follows:

PART 70—[AMENDED]

1. The authority citation for part 70 continues to read as follows:

Authority: 42 U.S.C. 7401, *et seq.*

2. Appendix A to part 70 is amended by adding paragraphs (z), (aa), and (gg) to the entry for California to read as follows:

Appendix A to Part 70—Approval Status of State and Local Operating Permits Programs

* * * * *

California

The following district program was submitted by the California Air Resources Board on behalf of:

* * * * *

(z) *San Luis Obispo County APCD* (complete submittal received on November 16, 1995); interim approval effective on December 1, 1995; interim approval expires December 1, 1997.

(aa) *Santa Barbara County Air Pollution Control District* (APCD) submitted on November 15, 1993, as amended March 2, 1994, August 8, 1994, December 8, 1994, and June 15, 1995; interim approval effective on December 1, 1995; interim approval expires December 1, 1997.

* * * * *

(gg) *Ventura County Air Pollution Control District* (APCD) submitted on November 16, 1993, as amended December 6, 1993; interim approval effective on December 1, 1995; interim approval expires December 1, 1997.

* * * * *

[FR Doc. 95–27142 Filed 10–31–95; 8:45 am]

BILLING CODE 6560–50–P

---

40 CFR Part 300

[FRL–5323–8]

Notice of Policy Change: Partial Deletion of Sites Listed on the National Priorities List

AGENCY: Environmental Protection Agency.

ACTION: Notice of policy change.

SUMMARY: The Environmental Protection Agency (EPA) is changing its policy concerning deletion of sites listed on the National Priorities List (NPL), or Superfund sites. EPA will now delete releases of hazardous substances at portions of sites, if those releases qualify for deletion. Sites, or portions of sites, that meet the standard provided in the National Oil and Hazardous Substances Pollution Contingency Plan (NCP), i.e., no further response is appropriate, may be the subject of entire or partial deletion. EPA expects that this action will help to promote the economic redevelopment of Superfund sites, and will better communicate the completion of successful partial cleanups.

EFFECTIVE DATE: November 1, 1995.

FOR FURTHER INFORMATION CONTACT: Hugo Paul Fleischman, (5203G), U.S. Environmental Protection Agency, 401 M St., S.W., Washington, D.C. 20460; (703) 603–8769. An alternative contact is the Superfund Hotline; 1–800–424–9346 (TDD 800–553–7672), or in the Washington, D.C. area, (703) 412–9810), (TDD 703–412–3323).

SUPPLEMENTARY INFORMATION: With State concurrence, EPA may delete sites from the NPL when it determines that no further response is appropriate under the Comprehensive Environmental Response, Compensation, and Liability Act of 1980 (CERCLA). *See* 40 CFR 300.425(e). In making that determination, EPA typically considers: whether responsible or other parties have implemented all appropriate and required response actions; whether all appropriate Fund-financed responses under CERCLA have been implemented and EPA has determined that no further cleanup by responsible parties is appropriate; or whether the release of hazardous substances poses no significant threat to the public health, welfare or the environment, thereby eliminating the need for remedial action.

To date, EPA policy has been to delete releases only after evaluation of the entire site. However, deletion of entire sites does not communicate the successful cleanup of portions of those sites. Total site cleanup may take many years, while portions of the site may have been cleaned up and may be available for productive use. Some potential investors or developers may be reluctant to undertake economic activity at even a cleaned-up portion of real property that is part of a site listed on the NPL.

Therefore, EPA will delete portions of sites, as appropriate, and will consider petitions to do so. Such petitions may be submitted by any person, including individuals, business entities, States, local governments, and other Federal agencies. Partial deletion will also be governed by 40 CFR 300.425(e). State concurrence will continue to, thus, be a requirement for any partial deletion.

EPA will consider partial deletion for portions of sites when no further response is appropriate for that portion of the site. Such portion may be a defined geographic unit of the site, perhaps as small as a residential unit, or may be a specific medium at the site, e.g., groundwater, depending on the nature or extent of the release(s).

Again, EPA wishes to emphasize that the primary purpose of the NPL is to serve as an informational and management tool. Whether property is part of an NPL site is unrelated to CERCLA liability because neither NPL listing nor deletion assigns liability to any party or to the owner of any specific property. Liability under CERCLA is determined under CERCLA section 107, which makes no reference to NPL listing or deletion. Listing or deleting a site from the NPL does not create CERCLA liability where it would not otherwise exist. As with entire sites, deleted portions of sites remain eligible for further Fund-financed remedial actions should future conditions warrant such action. Whenever there is a significant release from a site or portion of a site deleted from the NPL, the site or portion may be restored to the NPL without application of the Hazard Ranking System. *See 40 CFR 300.425(e)(3).*

Dated: October 24, 1995.

Elliott P. Laws,

Assistant Administrator.

[FR Doc. 95–27069 Filed 10–31–95; 8:45 am]

BILLING CODE 6560–50–P

FEDERAL EMERGENCY MANAGEMENT AGENCY

44 CFR Part 65

[Docket No. FEMA–7156]

Changes in Flood Elevation Determinations

AGENCY: Federal Emergency Management Agency (FEMA).

ACTION: Interim rule.

SUMMARY: This interim rule lists communities where modification of the base (1% annual chance) flood elevations is appropriate because of new scientific or technical data. New flood insurance premium rates will be calculated from the modified base flood elevations for new buildings and their contents.

DATES: These modified base flood elevations are currently in effect on the dates listed in the table and revise the Flood Insurance Rate Map(s) in effect prior to this determination for each listed community.

From the date of the second publication of these changes in a newspaper of local circulation, any person has ninety (90) days in which to request through the community that the Associate Director, Mitigation Directorate, reconsider the changes. The modified elevations may be changed during the 90-day period.

ADDRESSES: The modified base flood elevations for each community are available for inspection at the office of the Chief Executive Officer of each community. The respective addresses are listed in the following table.

FOR FURTHER INFORMATION CONTACT: Michael K. Buckley, P.E., Chief, Hazard Identification Branch, Mitigation Directorate, 500 C Street, SW, Washington, DC 20472, (202) 646–2756.

SUPPLEMENTARY INFORMATION: The modified base flood elevations are not listed for each community in this interim rule. However, the address of the Chief Executive Officer of the community where the modified base flood elevation determinations are available for inspection is provided.

Any request for reconsideration must be based upon knowledge of changed conditions, or upon new scientific or technical data.

The modifications are made pursuant to Section 201 of the Flood Disaster Protection Act of 1973, 42 U.S.C. 4105, and are in accordance with the National Flood Insurance Act of 1968, 42 U.S.C. 4001 et seq., and with 44 CFR Part 65.

For rating purposes, the currently effective community number is shown and must be used for all new policies and renewals.

The modified base flood elevations are the basis for the floodplain management measures that the community is required to either adopt or to show evidence of being already in effect in order to qualify or to remain qualified for participation in the National Flood Insurance Program (NFIP).

These modified elevations, together with the floodplain management criteria required by 44 CFR 60.3, are the minimum that are required. They should not be construed to mean that the community must change any existing ordinances that are more stringent in their floodplain management requirements. The community may at any time enact stricter requirements of its own, or pursuant to policies established by other Federal, State, or regional entities.

The changes in base flood elevations are in accordance with 44 CFR 65.4.

National Environmental Policy Act

This rule is categorically excluded from the requirements of 44 CFR Part 10, Environmental Consideration. No environmental impact assessment has been prepared.

Regulatory Flexibility Act

The Associate Director, Mitigation Directorate, certifies that this rule is exempt from the requirements of the Regulatory Flexibility Act because modified base flood elevations are required by the Flood Disaster Protection Act of 1973, 42 U.S.C. 4105, and are required to maintain community eligibility in the NFIP. No regulatory flexibility analysis has been prepared.

Regulatory Classification

This interim rule is not a significant regulatory action under the criteria of Section 3(f) of Executive Order 12866 of September 30, 1993, Regulatory Planning and Review, 58 FR 51735.

Executive Order 12612, Federalism

This rule involves no policies that have federalism implications under Executive Order 12612, Federalism, dated October 26, 1987.

Executive Order 12778, Civil Justice Reform

This rule meets the applicable standards of Section 2(b)(2) of Executive Order 12778.

List of Subjects in 44 CFR Part 65

Flood insurance, Floodplains, Reporting and recordkeeping requirements.

Accordingly, 44 CFR Part 65 is amended to read as follows:

PART 65—[AMENDED]

1. The authority citation for Part 65 continues to read as follows:

Authority: 42 U.S.C. 4001 et seq.; Reorganization Plan No. 3 of 1978, 3 CFR, 1978 Comp., p. 329; E.O. 12127, 44 FR 19367, 3 CFR, 1979 Comp., p. 376.

§ 65.4 [Amended]

2. The tables published under the authority of § 65.4 are amended as follows:

State and county	Location	Dates and name of newspaper where notice was published	Chief executive officer of community	Effective date of modification	Community No.
Arizona: Pima	Town of Oro Valley	July 27, 1995, August 3, 1995, *Daily Territorial*.	The Honorable Cheryl Skalsky, Mayor, Town of Oro Valley, 11000 North La Canada Drive, Oro Valley, Arizona 85737.	June 27, 1995	040109
Arizona: Maricopa	City of Phoenix	June 15, 1995, June 22, 1995, *Arizona Republic*.	The Honorable Skip Rimsza, Mayor, City of Phoenix, 200 West Washington Street, 11th Floor, Phoenix, Arizona 85003–1611.	May 26, 1995	040051
Arizona: Pima	Unincorporated Areas.	July 27, 1995, August 3, 1995, *Daily Territorial*.	The Honorable Paul Marsh, Chairman, Pima County Board of Supervisors, 130 West Congress Street, Fifth Floor, Tucson, Arizona 85701.	June 27, 1995	040073
California: Contra Costa	Unincorporated Areas.	August 18, 1995, August 25, 1995, *West County Times*.	The Honorable Gayle Bishop, Chairperson, Contra Costa County, Board of Supervisors, 18 Crow Canyon Court, Suite 120, San Ramon, California 94583.	July 17, 1995	060025
California: Contra Costa	City of Richmond	August 18, 1995, August 25, 1995, *West County Times*.	The Honorable Rosemary Corbin, Mayor, City of Richmond, 2600 Barrett Avenue, Richmond, California 94804.	July 17, 1995	060035
California: Riverside	City of Riverside	July 28, 1995, August 4, 1995, *Press Enterprise*.	The Honorable Ron Loveridge, Mayor, City of Riverside, 3900 Main Street, Riverside, California 92522.	July 7, 1995	060260
California: Sacramento	Unincorporated Areas.	August 4, 1995, August 11, 1995, *Sacramento Bee*.	Mr. Douglas M. Fraleigh, Administrator, Sacramento County, Public Works Agency, 827 Seventh Street, Room 304, Sacramento, California 95814.	July 3, 1995	060262
California: Santa Barbara	Unincorporated Areas.	July 28, 1995, August 4, 1995, *Santa Barbara News Press*.	The Honorable Timothy J. Staffel, Chairman, Santa Barbara County, Board of Supervisors, 105 East Anapamu Street, Fourth Floor, Santa Barbara, California 93101.	June 30, 1995	060331
California: Contra Costa	City of San Ramon	July 27, 1995, August 3, 1995, *Valley Times*.	The Honorable Greg Carr, Mayor, City of San Ramon, 2222 Camino Ramon, San Ramon, California 94583.	July 5, 1995	060710
California: Solano	City of Vacaville	August 24, 1995, August 31, 1995, *Reporter*.	The Honorable David A. Fleming, Mayor, City of Vacaville, 650 Merchant Street, Vacaville, California 95688.	July 28, 1995	060373
Colorado: El Paso	City of Colorado Springs.	August 4, 1995, August 11, 1995, *Gazette Telegraph*.	The Honorable Robert Isaac, Mayor, City of Colorado Springs, P.O. Box 1575, Colorado Springs, Colorado 80901.	July 14, 1995	080060
Colorado: Adams	City of Thornton	August 25, 1995, September 1, 1995, *Denver Post*.	The Honorable Margaret Carpenter, Mayor, City of Thornton, 9500 Civic Center Drive, P.O. Box 291220, Thornton, Colorado 80229–1220.	July 25, 1995	080007
Iowa: Johnson	City of Coralville	July 28, 1995, August 4, 1995, *Iowa City Press Citizen*.	The Honorable Allan Axeen, Mayor, City of Coralville, 1512 Seventh Street, Coralville, Iowa 52241.	July 10, 1995	190169
Iowa: Polk	City of Grimes	August 18, 1995, August 25, 1995, *Des Moines Register*.	The Honorable Brad Long, Mayor, City of Grimes, P.O. Box 460, Grimes, Iowa 50111.	July 19, 1995	190228
Iowa: Johnson	City of Iowa City	July 28, 1995, August 4, 1995, *Iowa City Press Citizen*.	The Honorable Susan Horowitz, Mayor, City of Iowa City, 410 East Washington Street, Iowa City, Iowa 52240.	July 10, 1995	190171

State and county	Location	Dates and name of newspaper where notice was published	Chief executive officer of community	Effective date of modification	Community No.
Oregon: Marion and Polk .	City of Salem	August 24, 1995, August 31, 1995, *Statesman-Journal*.	The Honorable Roger Gertenrich, Mayor, City of Salem, City Hall, 555 Liberty Street, Southeast, Salem, Oregon 97301–3503.	July 20, 1995	410167
South Dakota: Pennington	City of Rapid City ..	August 21, 1995, August 28, 1995, *Rapid City Journal*.	The Honorable Edward McLaughlin, Mayor, City of Rapid City, 300 Sixth Street, Rapid City, South Dakota 57701–2724.	July 20, 1995	465420
Texas: Coryell	City of Copperas Cove.	August 18, 1995, August 23, 1995, *Killeen Daily Herald*.	The Honorable J.A. Darossett, Mayor, City of Copperas Cove, P.O. Drawer 1449, Copperas Cove, Texas 76522.	July 18, 1995	480155
Texas: El Paso	City of El Paso	August 23, 1995, August 30, 1995, *El Paso Times*.	The Honorable Larry Francis, Mayor, City of El Paso, Two Civic Center Plaza, El Paso, Texas 79901–1196.	July 24, 1995	480214
Texas: Tarrant	City of Keller	August 22, 1995, August 29, 1995, *Keller Citizen*.	The Honorable Ron Lee, Mayor, City of Keller, P.O. Box 770, Keller, Texas 76244.	July 25, 1995	480602
Texas: Bexar, Guadalupe, and Comal.	City of Selma	August 3, 1995, August 10, 1995, *San Antonio Express News*.	The Honorable Harold Friesenhahn, Mayor, City of Selma, 9375 Corporate Drive, Selma, Texas 78154.	July 12, 1995	480046

(Catalog of Federal Domestic Assistance No. 83.100, ''Flood Insurance.'')

Dated: October 24, 1995.

Richard T. Moore,

Associate Director for Mitigation.

[FR Doc. 95–27085 Filed 10–31–95; 8:45 am]

BILLING CODE 6718–04–P–M

44 CFR Part 65

Changes in Flood Elevation Determinations

AGENCY: Federal Emergency Management Agency (FEMA).

ACTION: Final rule.

SUMMARY: Modified base (1% annual chance) flood elevations are finalized for the communities listed below. These modified elevations will be used to calculate flood insurance premium rates for new buildings and their contents.

EFFECTIVE DATES: The effective dates for these modified base flood elevations are indicated on the following table and revise the Flood Insurance Rate Map(s) in effect for each listed community prior to this date.

ADDRESSES: The modified base flood elevations for each community are available for inspection at the office of the Chief Executive Officer of each community. The respective addresses are listed in the following table.

FOR FURTHER INFORMATION CONTACT: Michael K. Buckley, P.E., Chief, Hazard Identification Branch, Mitigation Directorate, 500 C Street SW., Washington, DC 20472, (202) 646–2756.

SUPPLEMENTARY INFORMATION: The Federal Emergency Management Agency makes the final determinations listed below of the final determinations of modified base flood elevations for each community listed. These modified elevations have been published in newspapers of local circulation and ninety (90) days have elapsed since that publication. The Associate Director has resolved any appeals resulting from this notification.

The modified base flood elevations are not listed for each community in this notice. However, this rule includes the address of the Chief Executive Officer of the community where the modified base flood elevation determinations are available for inspection.

The modifications are made pursuant to Section 206 of the Flood Disaster Protection Act of 1973, 42 U.S.C. 4105, and are in accordance with the National Flood Insurance Act of 1968, 42 U.S.C. 4001 *et seq.*, and with 44 CFR Part 65.

For rating purposes, the currently effective community number is shown and must be used for all new policies and renewals.

The modified base flood elevations are the basis for the floodplain management measures that the community is required to either adopt or to show evidence of being already in effect in order to qualify or to remain qualified for participation in the National Flood Insurance Program (NFIP).

These modified elevations, together with the floodplain management criteria required by 44 CFR 60.3, are the minimum that are required. They should not be construed to mean that the community must change any existing ordinances that are more stringent in their floodplain management requirements. The community may at any time enact stricter requirements of its own, or pursuant to policies established by other Federal, State, or regional entities.

These modified elevations are used to meet the floodplain management requirements of the NFIP and are also used to calculate the appropriate flood insurance premium rates for new buildings built after these elevations are made final, and for the contents in these buildings.

The changes in base flood elevations are in accordance with 44 CFR 65.4.

National Environmental Policy Act

This rule is categorically excluded from the requirements of 44 CFR Part 10, Environmental Consideration. No environmental impact assessment has been prepared.

Regulatory Flexibility Act

The Associate Director, Mitigation Directorate, certifies that this rule is exempt from the requirements of the Regulatory Flexibility Act because modified base flood elevations are required by the Flood Disaster

Protection Act of 1973, 42 U.S.C. 4105, and are required to maintain community eligibility in the NFIP. No regulatory flexibility analysis has been prepared.

Regulatory Classification

This final rule is not a significant regulatory action under the criteria of Section 3(f) of Executive Order 12866 of September 30, 1993, Regulatory Planning and Review, 58 FR 51735.

Executive Order 12612, Federalism

This rule involves no policies that have federalism implications under Executive Order 12612, Federalism, dated October 26, 1987.

Executive Order 12778, Civil Justice Reform

This rule meets the applicable standards of Section 2(b)(2) of Executive Order 12778.

List of Subjects in 44 CFR Part 65

Flood insurance, Floodplains, Reporting and recordkeeping requirements.

Accordingly, 44 CFR Part 65 is amended to read as follows:

PART 65—[AMENDED]

1. The authority citation for Part 65 continues to read as follows:

Authority: 42 U.S.C. 4001 et seq.; Reorganization Plan No. 3 of 1978, 3 CFR, 1978 Comp., p. 329; E.O. 12127, 44 FR 19367, 3 CFR, 1979 Comp., p. 376.

§ 65.4 [Amended]

2. The tables published under the authority of § 65.4 are amended as follows:

State and county	Location	Dates and name of newspaper where notice was published	Chief executive officer of community	Effective date of modification	Community No.
Arizona: Maricopa (FEMA Docket No. 7144).	City of Phoenix	May 18, 1995, May 25, 1995, Arizona Republic.	The Honorable Skip Rimsza, Mayor, City of Phoenix, 200 West Washington Street, Phoenix, Arizona 85003.	April 19, 1995.	040051
California: Orange (FEMA Docket No. 7143).	City of Irvine	April 20, 1995, April 27, 1995, Irvine World News.	The Honorable Michael Ward, Mayor, City of Irvine, P.O. Box 19575, Irvine, California 92713.	March 30, 1995.	060222
California: Kern (FEMA Docket No. 7143).	Unincorporated areas.	April 19, 1995, April 26, 1995, Bakersfield Californian.	The Honorable Ken Peterson, Chairman, Kern County Board of Supervisors, 1115 Truston Avenue, Fifth Floor, Bakersfield, California 93301.	March 15, 1995.	060075
California: Orange (FEMA Docket No. 7143).	City of Lake Forest .	April 19, 1995, April 26, 1995, Saddle Back Valley News.	The Honorable Richard Dixon, Mayor, City of Lake Forest, 23778 Mercury Road, Lake Forest, California 92630.	March 30, 1995.	060759
California: Santa Barbara (FEMA Docket No. 7144).	Unincorporated areas.	May 18, 1995, May 25, 1995, Santa Barbara News-Press.	The Honorable Timothy J. Staffel, Chairperson, Santa Barbara County, Board of Supervisors, 105 East Anapamu Street, Fourth Floor, Santa Barbara, California 93101.	April 13, 1995.	060331
California: Kern (FEMA Docket No. 7143).	City of Tehachapi	April 19, 1995, April 26, 1995, Tehachapi News.	The Honorable Philip Smith, Mayor, City of Tehachapi, P.O. Box 668, Tehachapi, California 93581.	March 15, 1995.	060084
California: Solano (FEMA Docket No. 7139).	City of Vacaville	March 23, 1995, March 30, 1995, The Reporter.	The Honorable David A. Fleming, Mayor, City of Vacaville 650 Merchant Street, Vacaville, California 95688.	March 7, 1995.	060373
Colorado: Douglas (FEMA Docket No. 7143).	Town of Castle Rock	April 19, 1995, April 26, 1995, Douglas County News Press.	The Honorable Mark Williams, Mayor, Town of Castle Rock, 680 North Wilcox Street, Castle Rock, Colorado 80104.	March 20, 1995.	080050
Colorado: Douglas (FEMA Docket No. 7143).	Unincorporated areas.	April 19, 1995, April 26, 1995, Douglas County News Press.	The Honorable Robert A. Christensen, Chairperson, Douglas County Commissioners, 101 Third Street, Castle Rock, Colorado 80104.	March 20, 1995.	080049
Colorado: Douglas (FEMA Docket No. 7139).	Town of Parker	March 15, 1995, March 22, 1995, Douglas County New Press.	The Honorable Greg Lopez, Mayor, Town of Parker, 20120 East Main Street, Parker, Colorado 80134.	February 21, 1995.	080310
Hawaii: Honolulu (FEMA Docket No. 7143).	City and County of Honolulu.	April 18, 1995, April 25, 1995, Honolulu Advertiser.	The Honorable Jeremy Harris, Mayor, City and County of Honolulu, 530 South King Street, Room 300, Honolulu, Hawaii 96813.	March 21, 1995.	150001
Iowa: Tama (FEMA Docket No. 7143).	City of Tama	April 20, 1995, April 27, 1995, Tama News Herald.	The Honorable Richard Gibson, Mayor, City of Tama, 305 Siegel Street, Tama, Iowa 52339.	March 20, 1995.	190262
Missouri: St. Louis (FEMA Docket No. 7143).	City of Arnold	April 19, 1995, April 26, 1995, The Press Journal.	The Honorable Marion Becker, Mayor, City of Arnold, 2101 Jeffco Boulevard, Arnold, Missouri 63010.	March 24, 1995.	290188
Missouri: St. Louis (FEMA Docket No. 7143).	City of Maryland Heights.	April 19, 1995, April 26, 1995, St. Louis Post-Dispatch.	The Honorable Michael O'Brien, Mayor, City of Maryland Heights, 212 Millwell Drive, Maryland Heights, Missouri 63043.	March 22, 1995.	290889
Nevada: Independence City (FEMA Docket No. 7139).	City of Carson City .	March 23, 1995, March 30, 1995, Nevada Appeal.	The Honorable Marv Teixeira, Mayor, City of Carson City, 2621 Northgate Lane, Carson City, Nevada 89706.	February 27, 1995.	320001

State and county	Location	Dates and name of newspaper where notice was published	Chief executive officer of community	Effective date of modification	Community No.
Nevada: Clark (FEMA Docket No. 7144).	Unincorporated areas.	May 10, 1995, May 17, 1995, Las Vegas Review Journal.	The Honorable Yvonne Atkinson Gates, Chairperson, Clark County Board of Commissioners, 225 Bridger Avenue, Las Vegas, Nevada 89155.	April 19, 1995.	320003
Texas: Tarrant (FEMA Docket No. 7143).	City of Azle	April 20, 1995, April 27, 1995, Azle News.	The Honorable C. Y. Rone, Mayor, City of Azle, 613 Southeast Parkway, Azle, Texas 76020–3694.	March 29, 1995.	480584
Texas: Bexar (FEMA Docket No. 7143).	Unincorporated areas.	April 4, 1995, April 11, 1995, San Antonio Express News.	The Honorable Cyndi Taylor Krier, Bexar County Judge, Bexar County Courthouse, First Floor, 100 Dolorosa, San Antonio, Texas 78205–3036.	March 13, 1995.	480035
Texas: Bexar (FEMA Docket No. 7144).	Unincorporated areas.	May 9, 1995, May 16, 1995, San Antonio Express News.	The Honorable Cyndi Taylor Krier, Bexar County Judge, Bexar County Courthouse, First Floor, 100 Dolorosa, San Antonio, Texas 78205–3036.	April 11, 1995.	480035
Texas: Tarrant (FEMA Docket No. 7144).	City of Colleyville	May 3, 1995, May 10, 1995, Fort Worth Star Telegram.	The Honorable Cheryl Seigel, Mayor, City of Colleyville, P.O. Box 185, Colleyville, Texas 76034.	March 30, 1995.	480590
Texas: Dallas (FEMA Docket No. 7143).	City of Dallas	April 12, 1995, April 19, 1995, The Dallas Morning News.	The Honorable Steve Bartlett, Mayor, City of Dallas, 1500 Marilla, Room 5 E, Dallas, Texas 75201.	March 20, 1995.	480171
Texas: Tarrant (FEMA Docket No. 7144).	City of Grapevine	May 3, 1995, May 10, 1995, Fort Worth Star Telegram.	The Honorable William D. Tate, Mayor, City of Grapevine, P.O. Box 95104, Grapevine, Texas 76051.	March 30, 1995.	480598
Texas: Hardin (FEMA Docket No. 7143).	Unincorporated areas.	April 19, 1995, April 26, 1995, Hardin County News.	The Honorable Tom Mayfield, Hardin County Judge, Hardin County Courthouse, P.O. Box 760, Kountze, Texas 77625.	March 29, 1995.	480284
Texas: Collin (FEMA Docket No. 7143).	City of McKinney	April 4, 1995, April 11, 1995, McKinney Courier Gazette.	The Honorable John Gay, Mayor, City of McKinney, P.O. Box 517, McKinney, Texas 75069.	March 13, 1995.	480135
Texas: Tarrant (FEMA Docket No. 7143).	City of North Richland Hills.	April 20, 1995, April 27, 1995, Mid-Cities News.	The Honorable Tommy Brown, Mayor, City of North Richland Hills, 7301 North East Loop 820, North Richland Hills, Texas 76180.	March 28, 1995.	480607
Texas: Collin (FEMA Docket No. 7143).	City of Plano	April 19, 1995, April 26, 1995, Plano Star Courier.	The Honorable James N. Muns, Mayor, City of Plano, P.O. Box 860358, Plano, Texas 75086–0358.	March 30, 1995.	480140
Texas: Bexar (FEMA Docket No. 7143).	Town of Shavano Park.	April 4, 1995, April 11, 1995, San Antonio Express News.	The Honorable Thomas Peyton, Mayor, Town of Shavano Park, City Hall, 99 Saddletree Road, Shavano Park, Texas 78231.	March 13, 1995.	480047

(Catalog of Federal Domestic Assistance No. 83.100, ''Flood Insurance'')

Dated: October 24, 1995.

Richard T. Moore,

Associate Director for Mitigation.

[FR Doc. 95–27084 Filed 10–31–95; 8:45 am]

BILLING CODE 6718–04–P

44 CFR Part 67

Final Flood Elevation Determinations

AGENCY: Federal Emergency Management Agency (FEMA).

ACTION: Final rule.

SUMMARY: Base (1% annual chance) flood elevations and modified base flood elevations are made final for the communities listed below. The base flood elevations and modified base flood elevations are the basis for the floodplain management measures that each community is required either to adopt or to show evidence of being already in effect in order to qualify or remain qualified for participation in the National Flood Insurance Program (NFIP).

EFFECTIVE DATES: The date of issuance of the Flood Insurance Rate Map (FIRM) showing base flood elevations and modified base flood elevations for each community. This date may be obtained by contacting the office where the FIRM is available for inspection as indicated on the table below.

ADDRESSES: The final base flood elevations for each community are available for inspection at the office of the Chief Executive Officer of each community. The respective addresses are listed in the table below.

FOR FURTHER INFORMATION CONTACT: Michael K. Buckley, P.E., Chief, Hazard Identification Branch, Mitigation Directorate, 500 C Street, SW, Washington, DC 20472, (202) 646–2756.

SUPPLEMENTARY INFORMATION: The Federal Emergency Management Agency makes final determinations listed below of base flood elevations and modified base flood elevations for each community listed. The proposed base flood elevations and proposed modified base flood elevations were published in newspapers of local circulation and an opportunity for the community or individuals to appeal the proposed determinations to or through the

community was provided for a period of ninety (90) days. The proposed base flood elevations and proposed modified base flood elevations were also published in the Federal Register.

This final rule is issued in accordance with Section 110 of the Flood Disaster Protection Act of 1973, 42 U.S.C. 4104, and 44 CFR Part 67.

FEMA has developed criteria for floodplain management in floodprone areas in accordance with 44 CFR Part 60.

Interested lessees and owners of real property are encouraged to review the proof Flood Insurance Study and FIRM available at the address cited below for each community.

The base flood elevations and modified base flood elevations are made final in the communities listed below. Elevations at selected locations in each community are shown.

National Environmental Policy Act

This rule is categorically excluded from the requirements of 44 CFR Part 10, Environmental Consideration. No environmental impact assessment has been prepared.

Regulatory Flexibility Act

The Associate Director, Mitigation Directorate, certifies that this rule is exempt from the requirements of the Regulatory Flexibility Act because final or modified base flood elevations are required by the Flood Disaster Protection Act of 1973, 42 U.S.C. 4104, and are required to establish and maintain community eligibility in the NFIP. No regulatory flexibility analysis has been prepared.

Regulatory Classification

This final rule is not a significant regulatory action under the criteria of Section 3(f) of Executive Order 12866 of September 30, 1993, Regulatory Planning and Review, 58 FR 51735.

Executive Order 12612, Federalism

This rule involves no policies that have federalism implications under Executive Order 12612, Federalism, dated October 26, 1987.

Executive Order 12778, Civil Justice Reform

This rule meets the applicable standards of Section 2(b)(2) of Executive Order 12778.

List of Subjects in 44 CFR Part 67

Administrative practice and procedure, Flood insurance, Reporting and recordkeeping requirements.

Accordingly, 44 CFR Part 67 is amended to read as follows:

PART 67—[AMENDED]

1. The authority citation for Part 67 continues to read as follows:

Authority: 42 U.S.C. 4001 et seq.; Reorganization Plan No. 3 of 1978, 3 CFR, 1978 Comp., p. 329; E.O. 12127, 44 FR 19367, 3 CFR, 1979 Comp., p. 376.

§ 67.11 [Amended]

2. The tables published under the authority of § 67.11 are amended as follows:

Source of flooding and location	#Depth in feet above ground. * Elevation in feet (NGVD)
ARKANSAS	
Bryant (City), Saline County (FEMA Docket No. 7142)	
Crooked Creek:	
Corporate Limits	*349
Mills Park Road	*354
Ridgecrest Road	*373
Bryant Tributary:	
Confluence with Crooked Creek	*353
Private Drive	*372
Trailer Park Ditch:	
Downstream Corporate Limit	*348
Upstream Corporate Limit	*348
Confluence of Bryant Tributary and Crooked Creek	*352
Maps are available for inspection at 210 Southwest Third Street, Bryant, Arkansas.	
East Camden (City), Ouachita County (FEMA Docket No. 7134)	
Two Bayou Old Channel:	
Approximately 650 feet upstream of Alley B extended	*119
Just downstream of State Highway 274	*120
Maps are available for inspection at City Hall, City of East Camden, 100 North Womble, East Camden, Arkansas.	
Ouachita County (Unincorporated Areas) (FEMA Docket No. 7134)	
Two Bayou Main Canal:	
Approximately 300 feet downstream of State Highway 4	*113
Two Bayou Old Channel:	
Approximately 300 feet downstream of State Highway 274	*120
Approximately 1,700 feet downstream of State Highway 205	*134
Two Bayou Main Canal:	
Just upstream of State Highway 203	*160
Approximately 350 feet downstream of an unnamed road located 5,300 feet upstream of State Highway 203	*164
Approximately 17,650 feet upstream of State Highway 203	*185
Maps are available for inspection at the County Judge's Office, Court House, 145 Jefferson Street, Camden, Arkansas.	
Saline County (Unincorporated Areas) (FEMA Docket No. 7142)	
Crooked Creek:	
Brookwood Road (County Road 612)	*336
Approximately 215 feet upstream of Brookwood Road (County Road 612)	*337
Approximately 1,110 feet upstream of Brookwood Road (County Road 612)	*345
Trailer Park Ditch:	
Brookwood Road	*348
Bryant Tributary:	
Confluence with Crooked Creek	*352
Corporate Limit	*365
Maps are available for inspection at the Saline County Assessor's Office, 215 North Main, Benton, Arkansas.	
LOUISIANA	
Broussard (Town), Lafayette Parish (FEMA Docket No. 7090)	
Cypress Bayou:	
Just downstream of U.S. Route 90	*20
Just upstream of Southern Pacific Railroad	*27
Just upstream of South Morgan Street	*30
Approximately 2,000 feet upstream of Dustin Circle	*30
Cypress Bayou Ditch:	
Just upstream of St. Des Porres Street	*28
Just upstream of Oakview Drive	*30
Maps are available for inspection at City Hall, 416 East Main Street, Broussard, Louisiana.	
Calcasieu Parish (Unincorporated Areas) (FEMA Docket No. 7142)	
Kayouche Coulee:	
At Interstate Highway 10	*11
At Legion Street	*12

Source of flooding and location	#Depth in feet above ground. *Elevation in feet (NGVD)
Addison Lateral:	
Approximately 100 feet downstream of Gauthier Road	*14
Approximately 4,300 feet upstream of Addison Lane	*15
Airport Lateral:	
At Gauthier Road	*11
Approximately 100 feet downstream of Gulf Highway	*13
Approximately 3,000 feet upstream of Gulf Highway	*14
Belfield Lateral:	
At confluence with Little Indian Bayou	*22
At Sharon Lane	*23
Black Bayou:	
Just upstream of Gauthier Road	*12
At confluence with Higgins Lateral	*15
At Louisiana Highway	*20
Greathouse Lateral:	
Approximately 100 feet downstream of Gauthier Road	*12
Approximately 3,200 feet upstream of Gauthier Road	*15
Higgins Lateral:	
At confluence with Black Bayou	*15
Just downstream of Louisiana Highway 14	*18
Just upstream of Louisiana Highway 14	*19
Kinner Gully:	
Approximately 4,600 feet downstream of Mark LeBleu Road	*12
At Claude Hebert Road	*17
Approximately 7,100 feet upstream of State Highway 3059	*19
LeBleu Canal:	
Approximately 5,350 feet downstream of River Road	*16
At Bowman Road	*18
At Parish Barn Road	*19
Little Indian Bayou:	
Approximately 9,100 feet downstream of North Perkins Ferry Road	*18
Approximately 1,800 feet upstream of North Perkins Ferry Road	*20
At confluence with Belfield Lateral	*22
McFillen Lateral:	
Approximately 100 feet downstream of Gauthier Road	*15
Approximately 50 feet upstream of Marty Lane	*17
Approximately 1,920 feet upstream of Marty Lateral	*17
Maps are available for inspection at Calcasieu Parish Government Building, 1015 Pithon Street, Lake Charles, Louisiana.	

Lafayette (City), Lafayette Parish (FEMA Docket No. 7090)

Source of flooding and location	#Depth in feet above ground. *Elevation in feet (NGVD)
Anselm Coulee:	
At Ramblewood Road	*23
Approximately 2,000 feet upstream of Ramblewood Road	*24
Grenovillieres Swamp:	
At the confluence with Coulee Des Poches	*30
Approximately 1,800 feet downstream of North Bernard Street	*31
Coulee Ile Des Cannes:	
Approximately 350 feet downstream of West Congress Street	*27
Coulee Ile Des Cannes Lateral 2:	
At H. Mouton Road	*25
Approximately 4,000 feet upstream of H. Mouton Road	*27
Issac Verot Coulee Lateral 2:	
At Failla Road	*31
At Tolson Road	*32
Issac Verot Coulee Lateral 2A:	
At U.S. Route 339	*29
At East Martial Avenue	*31
At Rue Louis XIV	*32
Lateral F:	
At the confluence with Coulee Ile Des Cannes	*25
At West Congress Street	*29
At Dulles Drive	*30
At Des Jacques Road	*33
Vermilion Lateral 2 (Acadiana Coulee):	
At Driftwood Road	*16
At Bellview Plantation Road	*23
Approximately 200 feet upstream of Huval Road	*25
Approximately 200 feet upstream of Guidry Road	*27
Maps are available for inspection at 705 West University Avenue, Lafayette, Louisiana.	

Lafayette Parish (Unincorporated Areas) (FEMA Docket No. 7090)

Source of flooding and location	#Depth in feet above ground. *Elevation in feet (NGVD)
Bayou Carencro:	
At Meche Road	*24
At State Route 182	*28
Approximately 200 feet downstream of U.S. Route 167	*30
Approximately 500 feet upstream of Southern Pacific Railroad	*32
Approximately 6,600 feet upstream of Southern Pacific Railroad	*35
Grenovillieres Swamp:	
At confluence with Coulee Des Poches	*30
Approximately 1,200 feet upstream of North Bernard Road	*31
Coulee Ile Des Cannes:	
Approximately 400 feet downstream of West Congress Street	*27
Just downstream of Dulles Drive	*30
At Fenetre Road	*31
At Old Spanish Trail	*32
Coulee Ile Des Cannes Lateral 2:	
At the confluence with Coulee Ile Des Cannes	*25
Approximately 6,000 feet upstream of the confluence with Coulee Ile Des Cannes	*27
Approximately 2,200 feet downstream of West Congress Street	*30
Coulee Ile Des Cannes Lateral 5:	
Approximately 500 feet upstream of the confluence with Coulee Ile Des Cannes	*33
Approximately 2,000 feet upstream of the confluence with Coulee Ile Des Cannes	*36
Approximately 6,500 feet upstream of the confluence with Coulee Ile Des Cannes	*40
Just downstream of Joe Comeaux Road	*42
Cypress Bayou:	
Just downstream of Bayou Tortue Road	*18
Approximately 250 feet downstream of U.S. Route 90	*20
Just upstream of State Route 182	*26
At the confluence of Cypress Bayou Ditch	*27
Approximately 2,000 feet upstream of Dustin Circle	*30
Cypress Bayou Ditch:	
At the confluence with Cypress Bayou	*27
At St. Des Porres Street	*28
Lateral F:	
At the confluence with Coulee Ile Des Cannes	*25
At Rue De Belier Road	*29
At Dulles Drive	*30
At East Pershing Street	*35
Approximately 1,200 feet upstream of David Mouton Street	*36
Lateral F2:	
At the confluence with Lateral F	*29
Just downstream of Dulles Drive	*30
Approximately 1,000 feet downstream of Provost Drive	*31
At Old Spanish Trail	*32
Vermilion Lateral 2 (Acadiana Coulee):	

Source of flooding and location	#Depth in feet above ground. *Elevation in feet (NGVD)
At the confluence with Vermilion River	*15
Approximately 700 feet upstream of Huval Road	*25
Approximately 200 feet upstream of Guidry Road	*27
West Coulee Mine:	
Approximately 3,000 feet upstream of Interstate Highway 10	*38
At Emile Drive	*38
Approximately 2,600 feet upstream of North Dugas Road	*41
Maps are available for inspection at 707 West University Avenue, Lafayette, Louisiana.	
Ruston (City), Lincoln Parish (FEMA Docket No. 7142)	
Chautauqua Creek:	
Just downstream of Jefferson Avenue	*1,176
Approximately 100 feet upstream of Jefferson Avenue	*1,179
Approximately 100 feet upstream of Greenwood Drive	*215
Just upstream of south service road of Interstate Highway 20	*247
Colvin Creek:	
At northern corporate limits located approximately 1,130 feet downstream of Frazier Road	*183
Approximately 50 feet upstream of Frazier Road	*188
Just upstream of East Kentucky Avenue	*207
Just upstream of south service road of Interstate Highway 20	*259
Approximately 125 feet downstream of Florida Avenue	*277
Colvin Creek Tributary:	
Approximately 300 feet upstream of confluence with Colvin Creek	*199
Approximately 40 feet upstream of Cedar Creek Road	*205
Approximately 1,350 feet upstream of East Kentucky Avenue	*214
Choudrant Creek:	
At eastern corporate limits located approximately 2,500 feet downstream of Illinois Central Gulf Railroad	*201
Just downstream of Santiam Road	*218
Just upstream of Oak Park Road	*234
Approximately 400 feet upstream of Oak Park Road	*237
Choudrant Creek Tributary:	
At confluence with Choudrant Creek	*209
At McDonald Avenue	*219
Maps are available for inspection at the Department of Public Works, City Hall, City of Ruston, 401 North Trenton, Ruston, Louisiana.	
Scott (City), Lafayette Parish (FEMA Docket No. 7090)	
Coulee Ile Des Cannes:	
At Dulles Drive	*30
At Fenetre Road	*31
At Southern Pacific Railroad	*32
Lateral F:	
At West Congress Street	*29
At Rue De Belier Road	*29
At Dulles Drive	*30
At Des Jacques Road	*33
At Southern Pacific Railroad	*36
Lateral F2:	
At Dulles Drive	*30
Approximately 1,000 feet downstream of Provost Drive	*31
Just downstream of West Pershing Street	*32
Coulee Ile Des Cannes Lateral 5:	
At the confluence with Coulee Ile Des Cannes	*33
At State Route 93	*35
West Coulee Mine:	
Approximately 3,000 feet upstream of Interstate Highway 10	*38
Approximately 4,300 feet upstream of Interstate Highway 10	*38
Maps are available for inspection at City Hall, City of Scott, 445 Lions Club Road, Scott, Louisiana.	
MISSOURI	
Sedalia (City), Pettis County (FEMA Docket No. 7134)	
Brushy Creek:	
At the corporate limits, approximately 640 feet downstream of West Main Street	*793
Approximately 200 feet upstream of West Main Street	*798
Just upstream of State Fair Boulevard, eastbound lane	*820
Just upstream of Barrett Avenue	*841
Just downstream of 9th Street	*855
Brushy Creek Tributary #1:	
At confluence with Brushy Creek	*794
Just upstream of culvert at West Treatment Plant	*800
Approximately 200 feet upstream of State Fair Road	*814
Approximately 40 feet upstream of U.S. Highway 50	*822
Sewer Branch:	
At the north corporate limits, approximately 1,960 feet downstream of U.S. Highway 65	*811
Just upstream of William Parkhurst Drive	*824
Approximately 100 feet upstream of Missouri Avenue	*844
Just downstream of Washington Avenue	*861
Maps are available for inspection at the Engineering Department, City of Sedalia, City Hall, Second Floor, 200 South Osage Avenue, Sedalia, Missouri.	
OREGON	
Gresham (City), Multnomah County (FEMA Docket No. 7145)	
Kelly Creek:	
At upstream end of culvert at Kane Road	*303
Approximately 1,296 feet above downstream end of culvert at Kane Road	*319
At downstream end of culvert at Division Street	*335
Maps are available for inspection at City of Gresham, 1333 Northwest Eastman Parkway, Gresham, Oregon.	
TEXAS	
Bexar County (Unincorporated Areas) (FEMA Docket No. 7145)	
Cibolo Creek:	
Approximately 400 feet upstream of confluence of Martinez Creek	*525
Approximately 900 feet downstream of Weir Road	*646
Approximately 200 feet upstream of Missouri and Pacific Railroad	*786
Approximately 21,000 feet upstream of Missouri and Pacific Railroad	*840
Approximately 6,000 feet downstream of confluence of Clear Springs Fork	*880
Approximately 14,800 feet downstream of FM 1863 (downstream crossing)	*930
Just downstream of FM 1863 (upstream crossing)	*965
Just upstream of Smithson Valley Road	*1,017
Just downstream of U.S. Route 281 (northbound lanes)	*1,061
Just downstream of Blanco Road	*1,130

Source of flooding and location	#Depth in feet above ground. *Elevation in feet (NGVD)
Approximately 300 feet downstream of Ralph Fair Road ..	*1,254
Balcones Creek:	
Approximately 200 feet upstream of confluence with Cibolo Creek	*1,274
Approximately 3,200 feet upstream of confluence with Cibolo Creek	*1,278
West Salitrillo Creek:	
Just downstream of FM 1516 .	*647
Just upstream of Martinez Creek Dam No. 4	*740
Approximately 150 feet downstream of Miller Road	*801
East Salitrillo Creek:	
At confluence of East Branch of Salitrillo Creek	*670
Just upstream of Southern Pacific Railroad	*695
Approximately 2,525 feet upstream of confluence of East Fork of Salitrillo Creek	*736
East Branch of Salitrillo Creek:	
Approximately 650 feet upstream of confluence with East Salitrillo Creek	*672

Maps are available for inspection at Bexar County Public Works Department, Vista Verde Building, Suite 420, 233 North Pecos Street, San Antonio, Texas.

Borger (City), Hutchinson County (FEMA Docket No. 7142)

Source of flooding and location	#Depth in feet above ground. *Elevation in feet (NGVD)
Hill Creek:	
At corporate limits located approximately 660 feet downstream of State Highway 136	*3,125
Approximately 40 feet upstream of State Highway 136	*3,127
Approximately 90 feet upstream of Quail Hollow Street	*3,157
At the western corporate limits located approximately 1,010 feet upstream of Quail Hollow Street	*3,165
Tributary 1:	
At corporate limits located approximately 1,560 feet downstream of the confluence of Tributary 2	*3,080
Approximately 60 feet downstream of FM 1551	*3,118
At upstream corporate limits located approximately 2,540 feet upstream of FM 1551 ...	*3,170
Tributary 2:	
Approximately 200 feet upstream of confluence with Tributary 1	*3,095
Approximately 40 feet upstream of Philview Avenue ..	*3,117
Approximately 850 feet upstream of Philview Avenue ..	*3,122
Tributary 3:	
Approximately 70 feet upstream of confluence with Tributary 1	*3,102
Approximately 50 feet downstream of FM 1551	*3,123
Tributary 4:	
Approximately 100 feet downstream of FM 1551	*3,117
Approximately 80 feet upstream of FM 1551	*3,120
Approximately 1,770 feet upstream of FM 1551	*3,156

Maps are available for inspection at the City of Borger, Planning Department, City Hall, 600 North Main Street, Borger, Texas.

Fair Oaks Ranch (City), Bexar County (FEMA Docket No. 7145)

Source of flooding and location	#Depth in feet above ground. *Elevation in feet (NGVD)
Cibolo Creek:	
Approximately 700 feet upstream of Ralph Fair Road ..	*1,256
Approximately 200 feet upstream of confluence of Balcones Creek	*1,274
Approximately 9,800 feet upstream of confluence of Balcones Creek	*1,302
Balcones Creek:	
Approximately 200 feet upstream of confluence with Cibolo Creek	*1,274
Approximately 3,200 feet upstream of confluence with Cibolo Creek	*1,278

Maps are available for inspection at City Hall, City of Fair Oaks Ranch, 7286 Dietz Elkhorn, Fair Oaks Ranch, Texas.

Converse (City), Bexar County (FEMA Docket No. 7145)

Source of flooding and location	#Depth in feet above ground. *Elevation in feet (NGVD)
Drain No. 10:	
At confluence with West Salitrillo Creek	*795
Just downstream of Miller Road	*797
West Salitrillo Creek:	
Approximately 150 feet upstream of FM 1516	*649
Approximately 500 feet downstream of Southern Pacific Railroad	*700
Just upstream of Kitty Hawk Road	*771
Approximately 450 feet downstream of Miller Road	*797
East Salitrillo Creek:	
Approximately 1,500 feet upstream of confluence with Salitrillo Creek	*629
Approximately 250 feet upstream of Schaefer Road	*651
Approximately 100 feet upstream of FM 78	*683
Approximately 350 feet downstream of Martinez Creek Dam No. 5	*761
East Branch of Salitrillo Creek:	
Approximately 800 feet upstream of confluence with East Salitrillo Creek	*673
Approximately 100 feet downstream of FM 78	*714

Maps are available for inspection at City Hall, City of Converse, 403 South Setuins Avenue, Converse, Texas.

Live Oak (City), Bexar County (FEMA Docket No. 7145)

Source of flooding and location	#Depth in feet above ground. *Elevation in feet (NGVD)
Drain No. 1:	
At confluence with East Salitrillo Creek	*835
Approximately 50 feet upstream of Cherrywood Lane	*841
Drain No. 2:	
At confluence with East Salitrillo Creek	*829
Approximately 280 feet upstream of Greycliff Drive	*848
Drain No. 3:	
Just upstream of confluence with East Salitrillo Creek	*813
Approximately 100 feet upstream of Wilderness Trail ..	*851
Approximately 750 feet upstream of Toepperweim Road	*878
Drain No. 4:	
Approximately 120 feet upstream of confluence with East Salitrillo Creek	*808
Approximately 350 feet upstream of Village Oak Drive	*848
Drain No. 5:	
Approximately 40 feet upstream of confluence with Drain No. 4	*815
Approximately 1,080 feet upstream of Enchanted Oaks Drive	*834
Drain No. 6:	
At confluence with East Salitrillo Creek	*797
Approximately 1,250 feet upstream of Lone Shadow Trail	*868
Drain No. 7:	
Approximately 1,200 feet upstream of Martinez Creek Dam No. 5	*792
Approximately 1,000 feet upstream of Lone Shadow Trail	*839
Drain No. 8:	
At confluence with Drain No. 7	*792

Source of flooding and location	#Depth in feet above ground. *Elevation in feet (NGVD)
Approximately 1,030 feet upstream of confluence with Drain No. 7	*809
Drain No. 9:	
Just downstream of Miller Road	*797
Approximately 2,270 feet upstream of Miller Road	*865
Drain No. 10:	
Approximately 100 feet upstream of Miller Road	*801
Approximately 50 feet upstream of Forest Bluff	*948
Approximately 850 feet upstream of Forest Bluff	*875
Drain No.12:	
At confluence with West Salitrillo Creek	*838
Approximately 200 feet upstream of Avery Road	*896
Unnamed Tributary of Cibolo Creek:	
Approximately 330 feet downstream of Breached Dam	*825
Approximately 1,560 feet upstream of Breached Dam	*845
West Salitrillo Creek:	
Just upstream of Miller Road	*806
Approximately 200 feet upstream of Avery Road	*889
East Salitrillo Creek:	
Just upstream of Martinez Creek Dam No. 5	*792
Approximately 100 feet downstream of Village Oak Drive	*819
Approximately 200 feet upstream of State Highway 218	*857
Approximately 4,100 feet upstream of State Highway 218	*919
Maps are available for inspection at City Hall, City of Live Oak, 8001 Shin Oak Drive, Live Oak, Texas.	
San Antonio (City), Bexar County (FEMA Docket No. 7145)	
Leon Creek Overflow:	
At confluence with Leon Creek	*888
Approximately 3,600 feet downstream of Babcock Road	*905
Just upstream of Babcock Road	*921
Approximately 3,750 feet downstream of West Hausman Road	*935
Just downstream of West Hausman Road	*953
Cibolo Creek:	
Approximately 300 feet upstream of Missouri, Kansas, and Texas Railroad	*771
Approximately 200 feet downstream of Missouri and Pacific Railroad	*781
Salitrillo Creek:	
Just upstream of Martinez Creek Dam No. 6–A	*629
East Salitrillo Creek:	
At confluence with Salitrillo Creek	*629
West Salitrillo Creek:	
Approximately 3,500 feet upstream of confluence with Salitrillo Creek	*634
Approximately 1,300 feet upstream of FM 78	*665
Just downstream of Southern Pacific Railroad	*701
Maps are available for inspection at City Hall, City of San Antonio, 100 Military Plaza, San Antonio, Texas.	
Selma (City), Bexar County (FEMA Docket No. 7145)	
Cibolo Creek:	
Just downstream of confluence of Selma Creek	*738
Approximately 100 feet downstream of Lookout Road	*760
Maps are available for inspection at City Hall, City of Selma, 9375 Corporate Drive, Selma, Texas.	
Universal City (City), Bexar County (FEMA Docket No. 7145)	
Cibolo Creek:	
Just upstream of Aviation Boulevard	*715
Approximately 150 feet downstream of Selma Road	*735
East Salitrillo Creek:	
Approximately 2,675 feet upstream of confluence of East Fork of Salitrillo Creek	*737
Approximately 350 feet downstream of Martinez Creek Dam No. 5	*761
Just upstream of Martinez Creek Dam No. 5	*792
East Branch of Salitrillo Creek:	
Just upstream of Southern Pacific Railroad	*725
Approximately 950 feet upstream of Southern Pacific Railroad	*725
East Fork of East Branch of Salitrillo Creek:	
Just upstream of confluence of East Branch of Salitrillo Creek	*725
At FM 1604	*725
Maps are available for inspection at City Hall, City of Universal City, 2150 Universal City Boulevard, Universal City, Texas.	
UTAH	
Farmington (City), Davis County (FEMA Docket No. 7145)	
Farmington Creek:	
Just upstream of the Denver and Rio Grande Western Railroad	*4,231
Just upstream of the northbound Interstate Highway 15 Bridge	*4,255
Just upstream of the 300 North Bridge	*4,277
Just upstream of the 600 North Bridge	*4,316
Approximately 750 feet upstream of the 600 North Bridge	*4,365
Steed Creek:	
Approximately 450 feet downstream of the 620 South Bridge, at the Interstate Highway 15 Frontage Road	*4,252
Approximately 150 feet upstream of the 620 South Bridge	*4,254
Just upstream of the 75 West Bridge	*4,280
Just upstream of the 200 East Bridge	*4,360
Approximately 975 feet upstream of the 200 East Bridge	*4,425
Maps are available for inspection at Farmington City Hall, 130 North Main, Farmington, Utah.	

(Catalog of Federal Domestic Assistance No. 83.100, ''Flood Insurance.'')

Dated: October 24, 1995.

Richard T. Moore,

Associate Director for Mitigation.

[FR Doc. 95–27082 Filed 10–31–95; 8:45 am]

BILLING CODE 6718–04–P

FEDERAL COMMUNICATIONS COMMISSION

47 CFR Parts 73 and 74

[MM Docket No. 94–130; FCC 95–412]

Broadcast Station Operator Requirements

AGENCY: Federal Communications Commission.

ACTION: Final rule.

SUMMARY: The Commission amends its broadcast station rules to waive the requirement that broadcast stations be supervised only by FCC-licensed duty

operators. Also, a number of changes are made in the rules relating to station control to permit licensees to operate their stations in a completely automated, unattended mode, thus allowing licensees significant operational cost savings. This action is necessary to update broadcast operational rules to more accurately reflect the capabilities of current transmitter monitoring and control technology.

EFFECTIVE DATE: December 1, 1995.

FOR FURTHER INFORMATION CONTACT: James E. McNally, Jr., Mass Media Bureau, Engineering Policy Branch, (202) 776–1671.

SUPPLEMENTARY INFORMATION:

OMB Information Collection Notification

At the time the *Notice of Proposed Rule Making* (''*Notice*'') in the above-entitled matter was released (59 FR 64378, December 4, 1994), authority was sought from the Office of Management and Budget (''OMB'') pursuant to Section 3504(h) of the Paperwork Reduction Act, for the collection of information requested by the following existing or proposed rule sections: 73.62, 73.691, 73.1230, 73.1300, 73.1350, 73.1570, 74.165, 74.432, 74.564, 74.664, 74.765, 74.832, 74.965 and 74.1265. OMB approval for the collection of the indicated information has been obtained. It should be noted that most of this information has been requested as a matter of longstanding policy. Thus, much of the Commission's solicitation to OMB was retroactive in nature. However, in the case of proposed Section 73.1300, the Commission elects not to request information pertaining to contact persons responsible for broadcast stations operating in the unattended mode. Therefore, the OMB approval in connection with that section is moot.

This is a synopsis of the Commission's *Report and Order* in MM Docket No. 94–130 adopted October 2, 1995, and released on October 23, 1995. The complete text of this *Report and Order* is available for inspection and copying during normal business hours in the FCC Dockets Branch (Room 230), 1919 M St., N.W., Washington, D.C., and may be purchased from the Commission's copy contractor, International Transcription Service, Inc., (202) 857–3800, 211 M St., N.W., Suite 140, Washington, D.C. 20037.

Synopsis of Report and Order

1. This proceeding was initiated to determine, in light of the advances in automated transmission system equipment, whether and under what circumstances the commission should waive the requirement that a broadcast station must have a licensed radio operator on duty in charge of the transmitter during all periods of broadcast operation. This action was taken in response to the Telecommunications Authorization Act of 1992, Pub. L. No. 102–538, 106 Stat. 3533 (''Law''), which among other things amended the Communications Act of 1934 (''Act'') to permit the Commission to consider this option.

2. Specifically, Section 205(1) of the Law amended Section 318 of the Act, which requires that each AM, FM or TV station must be operated by a licensed transmitter duty operator (''duty operator'') holding a commercial radio operator license or permit of any class. Pursuant to Section 318, the Commission may waive or modify the operator requirement for all but specifically enumerated types of stations. The Law removed from the waiver/modification prohibition ''(3) stations engaged in broadcasting * * *.''

3. Thus, on the basis of the revised text of Section 318 and on the basis of the comments filed in this proceeding, the Commission waives the requirement that broadcast stations be operated by licensed duty operators, thereby permitting the unattended operation of broadcast stations. Additionally, where duty operators continue to be employed on an option basis, the requirement that they possess a radiotelephone license (usually the Restricted Radio Telephone Operator Permit or ''RP'') also is waived. Secondarily, the Commission updates various transmitter control requirements to make them more relevant to unattended operation and to be responsive to commonly asked questions concerning their interpretation. The principal matters at issue in this proceeding are summarized below under the appropriate topical headings.

Requirements Pertaining to Unattended Operation

4. The Notice requested comments on potential impediments to the unattended operation of broadcast stations. Specifically, it asked whether certain types of stations should be excluded (such as International Broadcast Stations, certain types of Broadcast Auxiliary Stations and AM stations without approved antenna sampling systems) from consideration fro unattended operation, and whether automated station monitoring and control (''AMC'') or Automatic Transmission System (''ATS'') equipment should be required for unattended operation. On the basis of the comments, the Commission determined that all types of broadcast stations may operate unattended and that the decision to employ the use of AMC equipment should be left to the discretion of licensees.

Unattended Operation and the Emergency Alert System

5. The Commission has had under development of several years a new Emergency Alert System (''EAS'') which is intended to replace the current Emergency Broadcast System (''EBS''). The EAS is specifically designed to be automated whereas the EBS is not. The Notice asked whether unattended operation of broadcast stations should be deferred pending implementation of the EAS. The comments reflected some differences of opinion on this issue. However, because various difficulties in implementing the EAS have arisen, the Commission determined that it would permit unattended operation in advance of implementation of the EAS, provided licensees implement some effective method of meeting their current EBS responsibilities.

Maximum Time Period for Non-Compliance Correction

6. The Notice discussed various types of broadcast out-of-tolerance operation, their probable interference impact, and the response time in which malfunctions should be corrected. The proposal that drew the most attention was to replace the imprecise word ''immediate'' with the specific time of three minutes currently used in connection with ATS-operated stations. Generally, the proposed three-minute response time was viewed as inappropriate, especially in the case of unattended stations. However, a number of the comments supported retention of the three-minute response time in the case of malfunctions with severe interference potential, but with several hours permitted in the case of lesser malfunctions.

7. The Commission noted that historically, it has required licensees to react more or less immediately to transmission system malfunctions capable of causing interference; but that this requirement was based largely on the fact that such a response time was practical (rather than necessary), as transmitter duty operators were always in attendance. It further noted that while technical malfunctions do adversely affect telecommunications and must be corrected, comparatively few are so disruptive as to require immediate correction or immediate

termination of broadcasting. Thus, the Commission agreed that the three-minute response time was unrealistic for a general standard. Instead, it adopted a three hour response time as the general rule, with a further requirement that a licensee be able to terminate station operation within three minutes if specifically requested to do so by the Commission, to react to serious malfunctions causing harmful or catastrophic loss of telecommunications service.

Monitoring, Measurement and Calibration Requirements

8. The Notice further explored what broadcast station technical parameters were in need of monitoring. It suggested, as a minimum, that transmitter power, modulation level and tower lighting status should be monitored, as well as daytime/nighttime mode changes and antenna relative phases and amplitudes at directional AM stations. Transmitter operating frequency was also mentioned for consideration. The Notice further proposed that action taken to remedy technical malfunctions be logged, and attempted to clarify how various station operating parameters should be measured.

9. The commenters responding to these questions unanimously expressed the belief that monitoring transmitter frequency was unnecessary. The proposed logging requirements were rejected as being unnecessary and unduly regulatory. Concern was also expressed about the measurement procedures described in the Notice. The claim was made that they constituted a *de facto* tightening of current operating tolerances.

10. On the basis of the comments, the Commission concluded that the measurement of transmitter frequency and the proposed logging requirements were unnecessary. The Commission clarified how the proposed rule on measurement tolerances was to be interpreted so as not to imply any tightening of operating tolerances.

Antenna Tower Light Monitoring

11. The Notice suggested that antenna tower light monitoring could be automated (as part of configuring a station for unattended operation) and that such ongoing monitoring might provide for better aviation safety than the once-a-day check currently required by the rules as a minimal monitoring activity. The comments generally supported this conclusion but raised some question as to who should be notified in the event of a lighting failure—the licensee, the Federal Aviation Administration (''FAA''), or both. The Commission concluded that its current rules adequately regulate automated tower light monitoring and indicated that the automated equipment should notify the licensee about any malfunction in order to ensure prompt remedial action. However, it said that equipment that notifies the licensee and the FAA simultaneously of tower lighting failure could be employed optionally.

Contact Person

12. The Notice solicited comment on the idea that the Commission should develop a contact person database in the case of unattended stations, so that it could contact some responsible person in the event of a serious technical malfunction. Alternatively, it proposed that contact information be posted at a station's transmitter site.

13. Comments on the proposed contact person database were ambivalent about its probable efficacy and they raised a number of collateral concerns such as privacy and reliability of maintenance. Similar reservations were expressed about any expansion in transmitter site posting requirements.

14. The Commission concluded that informal procedures long-used by its enforcement personnel were sufficient in view of the additional burdens that would be imposed by constructing and maintaining a more formal contact person database. The Commission also decided that no changes in current transmitter site posting requirements (which apply only to LPTV, TV translator and TV booster stations) were required.

Transmitter and Antenna System Adjustment

15. The Notice proposed that broadcast transmission system adjustments should only be done by the chief operator or by some other technically competent person designated by the licensee. This proposal received some support, but one commenter also questioned the value of the chief operator. The commenter noted that the chief operator (like the duty operator) only need hold the RP and is not required to have any special training or skill, thus rendering the position meaningless. The need for a competent on-call operator in the event of a station malfunction was stressed.

16. The Commission determined that while chief operators will no longer be required to hold any type of license or permit issued by the Commission, such personnel are responsible for the proper operation of broadcast stations and are expected to be technically competent for the task. Eliminating such a position would appear to go outside the scope of this proceeding, which has been oriented largely toward the roles of license duty operators. After reviewing the current and proposed regulations regarding technical personnel, the Commission concluded that no new rule is needed.

Permissible Methods for Remote Transmitter Control

17. Also emphasized in the Notice was the need for licensees to have prompt access to metering and control of their transmitters, particularly the ability to turn the transmitter off in the event of a malfunction (see ¶6, *supra*). The Commission proposed to permit a three minute delay in achieving such control, regardless of the kind of control circuit utilized. This question was raised largely due to uncertainty in the past over the reliability of non-dedicated, switched telephone circuits (such as those used for ordinary voice communication).

18. The Commission agreed with those in favor of relying on the PSTN for transmitter control. There is no doubt that the reliability of the PSTN is very high, and evidence that dedicated leased lines received higher priority from the local telephone companies has not been provided. Moreover, the Commission was not persuaded by arguments that dedicated switched lines should be used for purposes other than transmitter control, even if such use is expected to be small. Therefore, the rules are being amended to permit the use of a dedicated, switched telephone line (or number) for transmitter control purposes, in lieu of a dedicated, continual use leased line.

Radiotelephone Operator Permit (''RP'')

19. The Notice questioned whether in cases where licensees elect to continue attended station operation, duty operators should continue to be required to hold the RP. The comments were nearly unanimous in expressing the opinion that the RP serves no useful purpose and represents an unnecessary expense. Several commenters noted that the station licensee is the one responsible for a station's proper operation, not the holder of an RP. However, one commenter expressed the belief that requiring an operator license, even if only with the minimal requirements necessary to obtain the RP, would encourage a greater sense of responsibility, remove doubts that training for such duties is necessary and provide a means to prevent recurrent violators from operating broadcast stations. Another commenter reiterated

the last-mentioned point, indicating that while the RP is a card that requires no knowledge to obtain, it does at least hold people accountable to the FCC for their actions. They can be fined for their infractions and in cases of gross neglect, lose the permit.

20. The Commission was unpersuaded that the $35 cost of an RP and its potential for revocation constitute much of an incentive to operate a station responsibly. The vast majority of the commenters expressed the opinion that the RP is completely useless. As an incentive for responsible operation, possession of the RP would appear to be less effective than the damage to or severance of an employment relationship that should be expected in cases of negligent operation.

21. But the fact that broadcast licensees are held primarily responsible for the operation of their stations is the best argument for the elimination of the RP. The Commission believes that most licensees do attempt to procure competent technical personnel and that having the RP is viewed as irrelevant to that process. Therefore, the rules are being amended to delete the requirement that a station operator possess the RP.

Other Rule Changes Recommended in the Comments

22. Several commenters recommended changes to rules either not discussed in the Notice or not included in its Appendix. In some cases, the rules were not included in the Appendix due to oversight, but are logical outgrowths of this proceeding or are clerical in nature. Thus, the Commission eliminates Section 73.757(b), which requires that a licensed operator be in control whenever auxiliary transmitters are placed in operation, and Section 73.1230(c), which concerns the posting of operator licenses. Still other rule changes were suggested that go beyond the scope of this proceeding. These included revision of Section 73.45 to eliminate the requirement of notifying the Commission about changes in antenna resistance, common point impedance and the use of direct reading power meters, revision of Section 73.1560 (a)(1) and (b) to increase the upper power limit of AM and FM stations from 5% to 10% of the value authorized and deletion of Section 73.1570(a) which relates to minimum modulation.

23. Amendment of Sections 73.757 (which requires that a licensed operator be present when an auxiliary transmitter is placed in operation) and 73.1230 (which concerns the posting of operator licenses) will be made as requested, as they were omitted in the Notice due to oversight, are editorial in nature and are clearly within the scope of this proceeding. Further, the Commission agreed that omission of the substance of current Section 73.62(b) in the proposed revision constitutes an omission that unnecessarily reduces current operational flexibility. Therefore, Section 73.62 as adopted will retain the former flexibility concerning operation during inclement weather.

24. The suggested amendment of Section 73.45 may be worthwhile, but as no other parties commented on the proposal in reply comments, the Commission concluded that the amendment should be deferred for the present. Furthermore, the subject is expected to be discussed in another rulemaking preceding (*Notice of Proposed Rule Making* in MM Docket No. 93–177, An Inquiry into Commission Policies and Rules Regarding AM Radio Service Directional Antenna Performance Verification, 8 FCC Rcd 4345, (1993), 58 Fed. Reg 36184, July 6, 1993.). The recommended increase in power tolerance for AM and FM stations appears to be unnecessary, as the Commission has no complaints on record that the current tolerance is too stringent. Moreover, no reply comments supported the suggestion. The comment regarding main studio location is outside the scope of this proceeding, as more than simply technical factors would be at issue, and they would require further analysis in a more appropriate forum. Therefore, the Commission concluded that no revision to Sections 73.45, 73.1125, 73.1560 and 73.1570(a) should be made at this time.

25. Final Regulatory Flexibility Act Analysis

I. Reason for Action

A revision in the Communications Act of 1934 has given the Commission authority to waive the requirement that broadcast stations be operated by licensed transmitter duty operators. A waiver of this requirement would permit such stations to be operated unattended for the first time. This *Report and Order* specifies the conditions relating to such operation.

II. Objectives

The action taken herein is intended to update the rules to provide for unattended broadcast station operation and to clarify the technical responsibilities of broadcast licensees, particularly those operating unattended stations.

III. Legal Basis

The action taken is authorized by Sections 4 (i) and (j), 302, 303 and 403 of the Communications Act of 1934, as amended.

IV. Description, Potential Impact and Number of Small Entities Affected

The action taken in this proceeding is expected to benefit smaller broadcast licensees by eliminating the need for a transmitter duty operator. This is expected to result in a significant operational cost savings. However, taking advantage of the flexibility provided by the proposed new rules is entirely optional. Licensees may continue to operate as they currently do if they so desire.

V. Recording, Record Keeping and Other Compliance Requirements

Comments directed toward the Initial Regulatory Flexibility Analysis contained in the *Notice of Proposed Rule Making* (''*Notice*'') were filed by Ted Miller, who complained about new recordkeeping and other requirements proposed the Notice when the Initial Regulatory Flexibility Analysis indicated that there were none. Strictly speaking, Mr. Miller's assertions are correct. However, the Commission concludes that the new recordkeeping requirements proposed in the Notice were insignificant compared to the many other deregulatory aspects of this proceeding. However, all of Mr. Miller's complaints and recommendations have been accommodated and are addressed either in the text of the attached *Report and Order* or in the rule appendix, so that there is in fact no adverse regulatory impact whatsoever on smaller broadcast licensees.

VI. Federal Rules Which Overlap, Duplicate or Conflict With This Rule

None.

VII. Any Significant Alternative Minimizing Impact on Small Entities and Consistent with the Stated Objectives

None.

List of Subjects in 47 CFR Part 73

Radio broadcasting, Reporting and recordkeeping requirements, Television broadcasting.

Federal Communications Commission.

William F. Caton,

Acting Secretary.

Parts 73 and 74 of Title 47 of the Code of Federal Regulations are amended as follows:

PART 73—RADIO BROADCAST SERVICES

1. The authority citation for Part 73 is revised to read as follows:

Authority: 47 U.S.C. 154, 303, 334.

2. Section 73.53 is amended by revising paragraph (b)(9) to read as follows:

§ 73.53 Requirements for authorization of antenna monitors.

* * * * *

(b) * * *

(9) The monitor, if intended for use by stations operating directional antenna systems by remote control, shall be designed so that the switching functions required by paragraph (b)(7) of this section may be performed from a point external to the monitor, and phase and amplitude indications be provided by external meters. The indications of external meters furnished by the manufacturer shall meet the specifications for accuracy and repeatability of the monitor itself, and the connection of these meters to the monitor, or of other indicating instruments with electrical characteristics meeting the specifications of the monitor manufacturer shall not affect adversely the performance of the monitor in any respect.

* * * * *

3. Section 73.57 is amended by revising paragraph (d) to read as follows:

§ 73.57 Remote reading antenna and common point ammeters.

* * * * *

(d) Each remote reading ammeter shall be accurate to within 2 percent of the value read on its corresponding regular ammeter.

* * * * *

4. Section 73.62 is amended by revising paragraphs (b) and (c) to read as follows:

§ 73.62 Directional antenna system tolerances.

* * * * *

(b) Whenever the operating parameters of a directional antenna cannot be maintained within the tolerances specified in paragraph (a) of this section, the following procedures will apply:

(1) The licensee shall measure and log every monitoring point at least once for each mode of directional operation. Subsequent variations in operating parameters will require the remeasuring and logging of every monitoring point to assure that the authorized monitoring point limits are not being exceeded.

(2) Provided each monitoring point is within its specified limit, operation may continue for a period up to 30 days before a request for Special Temporary Authority (STA) must be filed, pursuant to paragraph (b)(4) of this section, to operate with parameters at variance from the provisions of paragraph (a) of this section.

(3) If any monitoring point exceeds its specified limit, the licensee must either terminate operation within 3 hours or reduce power in accordance with the applicable provisions of § 73.1350(d), in order to eliminate any possibility of interference or excessive radiation in any direction.

(4) If operation pursuant to paragraph (b)(3) of this section is necessary, or before the 30 day period specified in paragraph (b)(2) of this section expires, the licensee must request a Special Temporary Authority (STA) in accordance with § 73.1635 to continue operation with parameters at variance and/or with reduced power along with a statement certifying that all monitoring points will be continuously maintained within their specified limits.

(5) The licensee will be permitted 24 hours to accomplish the actions specified in paragraph (b)(1) of this section; *provided that,* the date and time of the failure to maintain proper operating parameters has been recorded in the station log.

(c) In any other situation in which it might reasonably be anticipated that the operating parameters might vary out of tolerance (such as planned array repairs or adjustment and proofing procedures), the licensee shall, *before such activity is undertaken,* obtain an STA in accordance with § 73.1635 in order to operate with parameters at variance and/or with reduced power as required to maintain all monitoring points within their specified limits.

5. Section 73.69 is amended by revising paragraphs (a)(1) and (a)(2) to read as follows:

§ 73.69 Antenna monitors.

(a) * * *

(1) Normally, the antenna monitor is to be installed immediately adjacent to the transmitter and antenna phasing equipment. However, the monitor may be located elsewhere provided that its environment is maintained at all times within those limits under which the monitor was type-approved.

(2) The antenna monitor installed at a station operating a directional antenna by remote control or when the monitor is installed in the antenna field at a distance from the transmitter, must be designed and authorized for such use in accordance with the provisions of § 73.53(b)(9).

* * * * *

6. Section 73.691 is revised to read as follows:

§ 73.691 Visual modulation monitoring.

(a) Each TV station must have measuring equipment for determining that the transmitted visual signal conforms to the provisions of this subpart. The licensee shall decide the monitoring and measurement methods or procedures for indicating and controlling the visual signal.

(b) In the event technical problems make it impossible to operate in accordance with the timing and carrier level tolerance requirements of § 73.682 (a)(9)(i), (a)(9)(ii), (a)(12), (a)(13), and (a)(17), a TV broadcast station may operate at variance for a period of not more than 30 days without specific authority from the FCC: *provided that,* the date and time of the initial out-of-tolerance condition has been entered in the station log. If the operation at variance will exceed 10 consecutive days, a notification must be sent to the FCC in Washington, D.C., not later than the 10th day of such operation. In the event normal operation is resumed prior to the end of the 30 day period, the licensee must notify the FCC upon restoration of normal operation. If causes beyond the control of the licensee prevent restoration of normal operation within 30 days, a written request must be made to the FCC in Washington, D.C., no later than the 30th day for such additional time as may be necessary.

§ 73.75 [Amended]

7. Section 73.757 is amended by removing and reserving paragraph (b).

§ 73.764 [Removed]

8. Section 73.764 is removed.

§ 73.1010 [Amended]

9. Section 73.1010 is amended by removing and reserving paragraph (c).

10. Section 73.1230 is revised to read as follows:

§ 73.1230 Posting of station license.

(a) The station license and any other instrument of station authorization shall be posted in a conspicuous place and in such a manner that all terms are visible at the place the licensee considers to be the principal control point of the transmitter.

(b) Posting of the station license and any other instruments of authorization shall be done by affixing them to the wall at thee posting location, or by enclosing them in a binder or folder

which is retained at the posting location so that the documents will be readily available and easily accessible.

11. A new § 73.1300 is added to read as follows:

§ 73.1300 Unattended station operation.

Broadcast stations may be operated as either attended (where a designated person is responsible for the proper operation of the transmitting apparatus either at the transmitter site, a remote control point or an ATS control point) or unattended (where highly stable equipment or automated monitoring of station operating parameters is employed). No prior FCC approval is required to operate a station in the unattended mode. Regardless of which method of station operation is employed, licensees must employ procedures which will ensure compliance with Part 11 of this chapter, the rules governing the Emergency Alert System (EAS).

12. A new § 73.1350 is added to read as follows:

§ 73.1350 Transmission system operation.

(a) Each licensee is responsible for maintaining and operating its broadcast station in a manner which complies with the technical rules set forth elsewhere in this part and in accordance with the terms of the station authorization.

(b) The licensee must designate a chief operator in accordance with § 73.1870. The licensee may designate one or more technically competent persons to adjust the transmitter operating parameters for compliance with the technical rules and the station authorization.

(1) Persons so authorized by the licensee may make such adjustments directly at the transmitter site or by using control equipment at an off-site location.

(2) The transmitter control personnel must have the capability to turn the transmitter off at all times. If the personnel are at a remote location, the control system must provide this capability continuously or must include an alternate method of acquiring control that can satisfy the requirement of paragraph (d) of this section that operation be terminated within 3 minutes.

(c) The licensee must establish monitoring procedures and schedules for the station and the indicating instruments employed must comply with § 73.1215.

(1) Monitoring procedures and schedules must enable the licensee to determine compliance with § 73.1560 regarding operating power and AM station mode of operation, § 73.1570 regarding modulation levels, and, where applicable, § 73.1213 regarding antenna tower lighting, and § 73.69 regarding the parameters of an AM directional antenna system.

(2) Monitoring equipment must be periodically calibrated so as to provide reliable indications of transmitter operating parameters with a known degree of accuracy. Errors inherent in monitoring equipment and the calibration procedure must be taken into account when adjusting operating parameters to ensure that the limits imposed by the technical rules and the station authorization are not exceeded.

(d) In the event that a broadcast station is operating in a manner that is not in compliance with the technical rules set forth elsewhere in this part or the terms of the station authorization, and the condition is not listed in paragraph (e) of this section, broadcast operation must be terminated within three hours.

(1) Examples of conditions that require termination of operation include excessive power or excessive modulation.

(2) Additional examples for AM stations are any mode of operation not specified by the station license for the pertinent time of day or hours of operation and any condition of antenna parameters or monitoring points out of the tolerances specified elsewhere in this part or by the station's instrument of authorization. For these conditions, operation must be terminated within three minutes unless antenna input power is reduced sufficiently to eliminate any excess radiation.

(3) For AM stations using directional arrays, additional procedures apply when array operating parameters are at variance, monitoring points exceed specified limits, or authorized directional mode capability is lost. See § 73.62, Directional antenna system tolerances; § 73.158, Directional antenna monitoring points; and § 73.1680(b), Emergency antennas.

(e) If a broadcast station is operating in a manner that is not in compliance with one of the following technical rules, operation may continue if the station complies with relevant alternative provisions in the specified rule section.

(1) AM directional antenna system tolerances, *see* § 73.62;

(2) AM directional antenna monitoring points, *see* § 73.158;

(3) TV visual waveform, *see* § 73.691(b);

(4) Reduced power operation, *see* § 73.1560(d);

(5) Reduced modulation level, *see* § 73.1570(a);

(6) Emergency antennas, *see* § 73.1680.

(f) The transmission system must be maintained and inspected in accordance with § 73.1580.

(g) Whenever a transmission system control point is established at a location other than at the main studio or transmitter, notification of that location must be sent to the FCC in Washington, D.C. within 3 days of the initial use of that point. This notification is not required if responsible station personnel can be contacted at the transmitter or studio site during hours of operation.

(h) The licensee must ensure that the station is operated in compliance with Part 11 of this chapter, the rules governing the Emergency Alert System (EAS).

13. Section 73.1400 is revised to read as follows:

§ 73.1400 Transmission system monitoring and control.

The licensee of an AM, FM or TV station is responsible for assuring that at all times the station operates within tolerances specified by applicable technical rules contained in this part and in accordance with the terms of the station authorization. Any method of complying with applicable tolerances is permissible. The following are typical methods of transmission system operation:

(a) *Attended operation.* (1) Attended operation consists of ongoing supervision of the transmission facilities by a station employee or other person designated by the licensee. Such supervision may be accomplished by either:

(i) Direct supervision and control of transmission system parameters by a person at the transmitter site; or

(ii) Remote control of the transmission system by a person at the main studio or other location. The remote control system must provide sufficient transmission system monitoring and control capability so as to ensure compliance with § 73.1350.

(2) A station may also be monitored and controlled by an automatic transmission system (ATS) that is configured to contact a person designated by the licensee in the event of a technical malfunction. An automatic transmission system consists of monitoring devices, control and alarm circuitry, arranged so that they interact automatically to operate the station's transmitter and maintain technical parameters within licensed values.

(3) A hybrid system containing some remote control and some ATS features is also permissible.

(4) In the case of remote control or ATS operation, not every station parameter need be monitored or controlled if the licensee has good reason to believe that its stability is so great that its monitoring and control are unnecessary.

(b) *Unattended operation*. Unattended operation is either the absence of human supervision or the substitution of automated supervision of a station's transmission system for human supervision. In the former case, equipment is employed which is expected to operate within assigned tolerances for extended periods of time. The latter consists of the use of a self-monitoring or ATS-monitored and controlled transmission system that, in lieu of contacting a person designated by the licensee, automatically takes the station off the air within three hours of any technical malfunction which is capable of causing interference.

§§ 73.1410, 73.1500, 73.1550 [Removed]

14. Sections 73.1410, 73.1500 and 73.1550 are removed.

15. Section 73.1580 is revised to read as follows:

§ 73.1580 Transmission system inspections.

Each AM, FM, and TV station licensee or permittee must conduct periodic complete inspections of the transmitting system and all required monitors to ensure proper station operation.

16. Section 73.1635 is amended by revising paragraph (a)(5) to read as follows:

§ 73.1635 Special temporary authorizations (STA).

(a) * * *

(5) Certain rules specify special considerations and procedures in situations requiring an STA or permit temporary operation at variance without prior authorization from the FCC when notification is filed as prescribed in the particular rules. See § 73.62, Directional antenna system tolerances; § 73.157, Antenna testing during daytime; § 73.158, Directional antenna monitoring points; § 73.691, Visual modulation monitoring; § 73.1250, Broadcasting emergency information; § 73.1350, Transmission system operation; § 73.1560, Operating power and mode tolerances; § 73.1570, Modulation levels: AM, FM, and TV aural; § 73.1615, Operation during modification of facilities; § 73.1680, Emergency antennas; and § 73.1740, Minimum operating schedule.

* * * * *

17. Section 73.1820 is amended by revising paragraphs (a) introductory text, (a)(2)(iii), by removing paragraphs (b)(4), (b)(5) and (b)(6), redesignating paragraphs (b)(7) and (b)(8) as paragraphs (b)(4) and (b)(5), respectively and revising newly redesignated paragraph (b)(4) to read as follows:

§ 73.1820 Station log.

(a) Entries must be made in the station log either manually by a person designated by the licensee who is in actual charge of the transmitting apparatus, or by automatic devices meeting the requirements of paragraph (b) of this section. Indications of operating parameters that are required to be logged must be logged prior to any adjustment of the equipment. Where adjustments are made to restore parameters to their proper operating values, the corrected indications must be logged and accompanied, if any parameter deviation was beyond a prescribed tolerance, by a notation describing the nature of the corrective action. Indications of all parameters whose values are affected by the modulation of the carrier must be read without modulation. The actual time of observation must be included in each log entry. The following information must be entered:

* * * * *

(2) * * *

(iii) Entries of the results of calibration of automatic logging devices (see paragraph (b) of this section) or indicating instruments (see § 73.67), whenever performed.

(b) * * *

(4) In the event of failure or malfunctioning of the automatic equipment, the person designated by the licensee as being responsible for the log small make the required entries in the log manually at that time;

* * * * *

§ 73.1860 [Removed]

18.Section 73.1860 is removed.

19. Section 73.1870 is amended by revising paragraphs (a) and (b)(3) to read as follows:

§ 73.1870 Chief operators.

(a) The licensee of each AM, FM, or TV broadcast station must designate a person to serve as the station's chief operator. At times when the chief operator is unavailable or unable to act (*e.g.*, vacations, sickness), the licensee shall designate another person as the acting chief operator on a temporary basis.

(b) * * *

(3) The designation of the chief operator must be in writing with a copy of the designation posted with the station license. Agreements with chief operators serving on a contract basis must be in writing with a copy kept in the station files.

* * * * *

PART 74—EXPERIMENTAL RADIO, AUXILIARY, SPECIAL BROADCAST AND OTHER PROGRAM DISTRIBUTIONAL SERVICES

20. The authority citation for Part 74 continues to read as follows:

Authority: Secs. 4, 303, 48 Stat. 1066, as amended, 1082, as amended; 47 U.S.C. 154, 303, 554.

§ 74.5 [Amended]

21. Section 74.5 is amended by removing and reserving paragraph (c).

22. Section 74.18 is revised to read as follows:

§ 74.18 Transmitter control and operation.

Except where unattended operation is specifically permitted, the licensee of each station authorized under the provisions of this part shall designate a person or persons to activate and control its transmitter. At the discretion of the station licensee, persons so designated may be employed for other duties and for operation of other transmitting stations if such other duties will not interfere with the proper operation of the station transmission systems.

23. Section 74.165 is revised to read as follows:

§ 74.165 Posting of station license.

The instrument of authorization or a clearly legible photocopy thereof shall be available at the transmitter site.

24. Section 74.432 is amended by revising paragraph (e)(1) to read as follows:

§ 74.432 Licensing requirements and procedures.

* * * * *

(e) * * *

(1) The station must be designed, installed, and protected so that the transmitter can only be activated or controlled by persons authorized by the licensee.

* * * * *

25. Section 74.434 is amended by revising paragraph (b) to read as follows:

§ 74.434 Remote control operation.

* * * * *

(b) A remote control system must be designed, installed, and protected so that the transmitter can only be activated or controlled by persons authorized by the licensee.

* * * * *

26. Section 74.436 is amended by revising paragraph (a) to read as follows:

§ 74.436 Special requirements for automatic relay stations.

(a) An automatic relay station must be designed, installed, and protected so that the transmitter can only be activated or controlled by persons authorized by the licensee.

* * * * *

27. Section 74.533 is amended by revising paragraph (a)(2) to read as follows:

§ 74.533 Remote control and unattended operation.

(a) * * *

(2) The remote control system must be designed, installed, and protected so that the transmitter can only be activated or controlled by persons authorized by the licensee.

* * * * *

28. Section 74.564 is amended by revising the section heading and paragraph (a) to read as follows:

§ 74.564 Posting of station license.

(a) The station license and any other instrument of authorization or individual order concerning the construction of the equipment or manner of operation of the station shall be posted in the room in which the transmitter is located, provided that if the station is operated by remote control pursuant to § 74.533, the station license shall be posted at the operating position.

* * * * *

29. Section 74.634 is amended by revising paragraph (a)(1) to read as follows:

§ 74.634 Remote control operation.

(a) * * *

(1) The remote control system must be designed, installed, and protected so that the transmitter can only be activated or controlled by persons authorized by the licensee.

* * * * *

30. Section 74.703 is amended by revising paragraph (c) to read as follows:

§ 74.703 Interference.

* * * * *

(c) It shall be the responsibility of the licensee of a low power TV, TV translator, or TV booster station to correct any condition of interference which results from the radiation of radio frequency energy outside its assigned channel. Upon notice by the Commission to the station licensee that such interference is caused by spurious emissions of the station, operation of the station shall be suspended within three minutes and not resumed until the interference has been eliminated. However, short test transmissions may be made during the period of suspended operation to check the efficacy of remedial measures.

* * * * *

31. Section 74.734 is amended by revising paragraph (a) introductory text and removing paragraph (a)(6) to read as follows:

§ 74.734 Attended and unattended operation.

(a) Low power TV, TV translator, and TV booster stations may be operated without a designated person in attendance if the following requirements are met:

* * * * *

32. Section 74.750 is amended by revising paragraph (g) to read as follows:

§ 74.750 Transmission system facilities.

* * * * *

(g) Low power TV, TV translator, or TV booster stations installing new type accepted transmitting apparatus incorporating modulating equipment need not make equipment performance measurements and shall so indicate on the station license application. Stations adding new or replacing modulating equipment in existing low power TV, TV translator, or TV booster station transmitting apparatus must have a qualified person examine the transmitting system after installation. This person must certify in the application for the station license that the transmitting equipment meets the requirements of paragraph (d)(1) of this section. A report of the methods, measurements, and results must be kept in the station records. However, stations installing modulating equipment solely for the limited local origination of signals permitted by § 74.731 need not comply with the requirements of this paragraph.

§ 74.765 [Amended]

33. Section 74.765 is amended by removing paragraph (b) and redesignating paragraph (c) as paragraph (b).

34. Section 74.769 is revised to read as follows:

§ 74.769 Copies of rules.

The licensee or permittee of a station authorized under this subpart shall have a current copy of Volume I and Volume III of the Commission's Rules. Each such licensee or permittee shall be familiar with those rules relating to stations authorized under this subpart. Copies of the Commission's rules may be obtained from the Superintendent of Documents, Government Printing Office, Washington, DC 20402.

35. Section 74.901 is amended by revising the definitions for ''Attended operation'', ''Remote control'' and ''Unattended operation'' to read as follows:

§ 74.901 Definitions.

Attended operation. Operation of a station by a designated person on duty at the place where the transmitting apparatus is located with the transmitter in the person's plain view.

* * * * *

Remote control. Operation of a station by a designated person at a control position from which the transmitter is not visible but where suitable control and telemetering circuits are provided which allow the performance of the essential functions that could be performed at the transmitter.

* * * * *

Unattended operation. Operation of a station by automatic means whereby the transmitter is turned on and off and performs its functions without attention by a designated person.

36. Section 74.939 is amended by revising paragraph (i) to read as follows:

§ 74.939 Special rules governing ITFS response stations.

* * * * *

(i) The transmitter of an ITFS response station may be operated unattended. The overall performance of the ITFS response station transmitter shall be checked as often as necessary to ensure that it is functioning in accordance with the requirements of the Commission's rules. The licensee of an ITFS response station is responsible for the proper operation of the transmitter at all times. The transmitter shall be installed and protected in such manner as to prevent tampering or operation by unauthorized persons.

* * * * *

37. Section 74.969 is revised to read as follows:

§ 74.969 Copies of rules.

The licensee of an instructional television fixed station shall have a current copy of Parts 73 and 74 of this chapter. In cases where aeronautical hazard marking of antennas is required, such licensee shall also have a current copy of Part 17 of this chapter. Each licensee is expected to be familiar with the pertinent rules governing instructional television fixed stations.

38. Section 74.1203 is amended by revising paragraph (e) to read as follows:

§ 74.1203 Interference.

* * * * *

(e) It shall be the responsibility of the licensee of an FM translator or FM booster station to correct any condition of interference which results from the radiation of radio frequency energy by its equipment on any frequency outside the assigned channel. Upon notice by the Commission to the station licensee that such interference is being caused, the operation of the FM translator or FM booster station shall be suspended within three minutes and shall not be resumed until the interference has been eliminated or it can be demonstrated that the interference is not due to spurious emissions by the FM translator or FM booster station; *provided, however,* that short test transmissions may be made during the period of suspended operation to check the efficacy of remedial measures.

39. Section 74.1234 is amended by revising paragraph (a) introductory text and removing paragraph (c) to read as follows:

§ 74.1234 Unattended operation.

(a) A station authorized under this subpart may be operated without a designated person in attendance if the following requirements are met:

* * * * *

[FR Doc. 95–26699 Filed 10–3–95; 8:45 am]

BILLING CODE 6712–01–M

47 CFR Part 90

[PR Docket No. 89–553, GN Docket No. 93–252; FCC 95–429]

SMR Systems in the 900 MHz Frequency Band

AGENCY: Federal Communications Commission.

ACTION: Final rule.

SUMMARY: The Commission, on its own motion, adopted a *Third Order on Reconsideration,* reconsidering the coverage requirement for the 900 MHz Specialized Mobile Radio (SMR) service. In addition, the *Third Order on Reconsideration* also amended the Part 90 rules to include a renewal expectancy for 900 MHz Major Trading Area (MTA) licensees. The intended effect of this action is to clarify the service rules for the 900 MHz SMR service.

EFFECTIVE DATE: December 1, 1995.

FOR FURTHER INFORMATION CONTACT: Diane Law, (202) 418–0660, Wireless Telecommunications Bureau.

SUPPLEMENTARY INFORMATION: This is a synopsis of the *Third Order on Reconsideration,* released October 20, 1995. The complete text of this *Third Order on Reconsideration* is available for inspection and copying during normal business hours in the FCC Dockets Branch, Room 239, 1919 M Street, NW., Washington, DC, and also may be purchased from the Commission's copy contractor, International Transcription Service, at (202) 857–3800, 2100 M Street, NW., Suite 140, Washington, DC 20037.

Synopis of the Third Order on Reconsideration

Adopted: October 20, 1995
Released: October 20, 1995

I. Background

The Commission adopted the service and auction rules for the 900 MHz SMR auction in the *Second Order on Reconsideration & Seventh Report & Order,* 60 FR 48913 (Sept. 21, 1995). In that *Order,* The Commission stated that it would auction 1,020 MTA licenses for the 900 MHz SMR service in a simultaneous multi-round auction. The Commission also adopted coverage requirements for MTA licensees. 900 MHz MTA licensees must provide coverage to one-third of the population of their service area within three years of initial license grant and to two-thirds of the population of their service area within five years, or, at the five year mark, submit a showing of substantial service.

II. Third Order on Reconsideration

A. Coverage Requirement

Substantial Service. The Commission clarifies that the ''substantial service'' showing is a mechanism designed for specialized users who may not be able to meet the two-thirds coverage requirement due to individualized circumstances. Two possible examples of individualized circumstances which could warrant a showing of ''substantial service'' are licensees who provide a ''niche service'' to businesses or who focus on serving populations outside of areas currently served by incumbent licensees. The coverage requirement is not intended to act a deterrent to seeking MTA licenses, and the Commission believes that with the ''substantial service'' mechanism it has provided sufficient flexibility for new entrants to provide new services or to serve now unserved populations in all of the licenses.

Resale. The Commission also clarifies that 900 MHz MTA licensees may engage in resale agreements for use of others' facilities to enhance the quality of service to the population of their service areas, but these resale agreements may not act as a substitute for meeting the coverage requirements by building facilities. 900 MHz MTA licensees may resell their service. However the licensee must remain in control of its spectrum and remains responsible for insuring that the coverage requirements are met. The Commission declines to require that a specific number of channels be deployed to implement the coverage rule, however, it reserves judgment on whether such a requirement may be necessary in other services.

B. Renewal Expectancy.

In the Commercial Mobile Radio Service (CMRS) *Third Report and Order,* 59 FR 59945 (Nov. 21 1994), the Commission stated that the applicable sections of Part 22 governing renewal expectancies would be incorporated into Part 90 of the Commission's rules for CMRS providers. In this *Third Order on Reconsideration,* the Commission amends the Part 90 rules to include a renewal expectancy for 900 MHz MTA licensees. Following the end of their ten year license term, 900 MHz MTA licensees will be afforded a renewal expectancy provided they are able to demonstrate that they: (1) Provided ''substantial'' service during the license term; and (2) complied with applicable Commission rules and policies, and the Communications Act.

IV. Procedural Matters and Ordering Clauses

Ordering Clauses. Accordingly, it is ordered that, pursuant to the authority of Sections 4(i), 303(r), and 309(j) of the Communications Act of 1934, as amended, 47 U.S.C. 154(i), 303(r), and 309(j), this *Third Order on Reconsideration* is adopted and Part 90 of the Commission's Rules is amended as set forth below.

It is further ordered that the rule amendments set forth below will become effective December 1, 1995.

List of Subjects in 47 CFR Part 90

Radio.

Federal Communications Commission.
William F. Caton,
Acting Secretary.

Amendatory Text

Part 90 of Chapter I of Title 47 of the Code of Federal Regulations is amended as follows:

PART 90—PRIVATE LAND MOBILE RADIO SERVICES

1. The authority citation for Part 90 is revised to read as follows:

Authority: 47 U.S.C. 154, 303, 309 and 332.

2. A new Section 90.816 is added to read as follows:

§ 90.816 Criteria for comparative 900 MHz SMR renewal proceedings.

(a) *Ultimate issue.* The ultimate issue in comparative renewal proceedings will be to determine, in light of the evidence adduced in the proceeding, what disposition of the applications would best serve the public interest, convenience and necessity.

(b) *Renewal expectancies.* The most important comparative factor to be considered in a comparative 900 MHz SMR renewal proceeding is a major preference, commonly referred to as a ''renewal expectancy''.

(1) The 900 MHz SMR renewal applicant involved in a comparative renewal proceeding will receive a renewal expectancy, if its past record for the relevant license period demonstrates that:

(i) The renewal applicant has provided ''substantial'' service during its past license term. ''Substantial'' service is defined as service which is sound, favorable, and substantially above a level of mediocre service which just might minimally warrant renewal; and

(ii) The renewal applicant has substantially complied with applicable FCC rules, policies and the Communications Act of 1934, as amended.

(2) In order to establish its right to a renewal expectancy, a 900 MHz renewal applicant involved in a comparative renewal proceeding must submit a showing explaining why it should receive a renewal expectancy. At a minimum, this showing must include:

(i) A description of its current service in terms of geographic coverage and population served;

(ii) An explanation of its record of expansion, including a timetable of the construction of new base sites to meet changes in demand for SMR service;

(iii) A description of its investments in its 900 MHz SMR system; and

(iv) Copies of all FCC orders finding the licensee to have violated the Communications Act or any FCC rule or policy; and a list of any pending proceedings that relate to any matter described in paragraph (b)(2) of this section.

(3) In making its showing of entitlement to a renewal expectancy, a renewal applicant may claim credit for any system modification applications that were pending on the date it filed its renewal application. Such credit will not be allowed if the modification application is dismissed or denied.

[FR Doc. 95–26748 Filed 10–31–95; 8:45 am]

BILLING CODE 6712–01–M

47 CFR Part 97

[DA 95–2106]

Use of CLOVER, G–TOR, and PacTOR Digital Codes

AGENCY: Federal Communications Commission.

ACTION: Final rule; interpretation.

SUMMARY: On October 2, 1995, the Chief, Wireless Telecommunications Bureau adopted an *Order* that clarified that amateur stations may use any digital code that has its technical characteristics publicly documented. The amendments were necessary because some amateur operators have expressed concern about the propriety of using the CLOVER, G–TOR, and PacTOR codes on the High Frequency amateur service bands.

EFFECTIVE DATE: November 1, 1995.

FOR FURTHER INFORMATION CONTACT: William T. Cross of the Wireless Telecommunications Bureau at (202) 418–0680.

SUPPLEMENTARY INFORMATION:

Order

Adopted: October 2, 1995
Released: October 11, 1995

By the Chief, Wireless Telecommunications Bureau:

1. This Order amends Section 97.309(a) of the Commission's Rules, 47 CFR 97.309(a), to clarify that amateur stations may use any digital code that has its technical characteristics publicly documented. This action was initiated by a letter from the American Radio Relay League, Inc. (ARRL).

2. The ARRL states that some amateur operators have expressed concern about the propriety of using the CLOVER, G–TOR, and PacTOR codes on the High Frequency (HF) amateur service bands. [CLOVER, G–TOR, and PacTOR are different techniques currently used by many amateur operators to increase the efficiency of digital communications transmitted on the HF portion of the radio spectrum.] This is due to the fact that Section 97.309(a) appears to authorize only the Baudot, AMTOR, and ASCII codes on the HF bands. [On the Very High Frequency and shorter wavelength bands, the rules authorize the use of any unspecified digital code provided the emission does not exceed a specified bandwidth. *See* Sections 97.307(f) (5)–(7) of the Commission's Rules, 47 CFR §§ 97.307(f) (5)–(7).] The ARRL states that it has worked with the developers of CLOVER, G–TOR, and PacTOR to document the technical characteristics of these codes. It requests, therefore, that we amend Section 97.309(a) of the Commission's Rules to specifically authorize CLOVER, G–TOR, and PacTOR to remove any doubt about the permissibility of their use.

3. The primary purpose of CLOVER, G–TOR, and PacTOR is to facilitate communications using already-authorized digital codes, emission types, and frequency bands. The technical characteristics of CLOVER, G–TOR, and PacTOR have been documented publicly for use by amateur operators, and commercial products are readily available that facilitate the transmission and reception of communications incorporating these codes. [*See Technical Descriptions CLOVER, G–TOR, PACTOR,* published by the American Radio Relay League, Inc. (1995).] Including CLOVER, G–TOR, and PacTOR in the rules will not conflict with our objective of preventing the use of codes or ciphers intended to obscure the meaning of the communication. [The HF bands are widely used for international communications. Number 2732 § 2.(1) of Article 32 Section I of the International Telecommunications Union *Radio Regulations* requires that transmissions between amateur stations of different countries by made in plain language. Section 97.113(a)(4) of the Commission's Rules, 47 CFR § 97.113(a)(4), therefore, prohibits amateur stations from transmitting messages in codes or ciphers intended to obscure the meaning thereof.] We agree, therefore, that it would be helpful to the amateur service community for the rules to specifically authorize amateur stations to transmit messages and data using these and similar digital codes. Accordingly, we are amending Section 97.309(a) to clarify the rules as requested by the ARRL.

4. Because the rule amendment adopted herein is interpretative in nature, and clarifies the existing amateur service rules, the notice and comment provisions of Section 553(b) of the Administrative Procedure Act, 5 U.S.C. § 553(b), do not apply, and it is not subject to the publication or service requirements of Section 553(d) of the Administrative Procedure Act, 5 U.S.C. § 553(d).

5. We certify that the Regulatory Flexibility Act of 1980 does not apply to the amended rule because there will not be any significant economic impact on a substantial number of small business entities, as defined by Section 601(3) of the Regulatory Flexibility Act. The amateur service may not be used to transmit communications for compensation, for the pecuniary benefit of the station control operator or the

station control operator's employer, or for communications, on a regular basis, which could reasonably be furnished through other radio services. *See* 47 CFR § 97.113. The Secretary shall send a copy of this *Order*, including the certification, to the Chief Counsel for Advocacy of the Small Business Administration in accordance with paragraph 605(b) of the Regulatory Flexibility Act, Pub. L. No. 96–354, 94 Stat. 1164, 5 U.S.C. §§ 601–612 (1981).

6. Accordingly, IT IS ORDERED that effective upon publication in the Federal Register, Part 97 of the Commission's Rules, 47 CFR Part 97, IS AMENDED as set forth below. This action is taken under the authority delegated to the Chief, Wireless Telecommunications Bureau, in section 0.331(a)(1) of the Commission's Rules, 47 CFR § 0.331(a)(1).

List of Subjects in 47 CFR Part 97

Radio.

Federal Communications Commission.

Regina M. Keeney,

Chief, Wireless Telecommunications Bureau.

Rule Changes

Part 97 of Chapter I of Title 47 of the Code of Federal Regulations is amended as follows:

PART 97—AMATEUR RADIO SERVICE

1. The authority citation for Part 97 continues to read as follows:

Authority: 48 Stat. 1066, 1082, as amended; 47 U.S.C. 154, 303. Interpret or apply 48 Stat. 1064–1068, 1081–1105, as amended; 47 U.S.C. 151–155, 301–609, unless otherwise noted.

2. Section 97.309 is amended by adding paragraph (a)(4) to read as follows:

§ 97.309 RTTY and data emission codes.

(a) * * *

(4) An amateur station transmitting a RTTY or data emission using a digital code specified in this paragraph may use any technique whose technical characteristics have been documented publicly, such as CLOVER, G–TOR, or PacTOR, for the purpose of facilitating communications.

* * * * *

[FR Doc. 95–27044 Filed 10–31–95; 8:45 am]

BILLING CODE 6712–01–M

Proposed Rules

Federal Register
Vol. 60, No. 211
Wednesday, November 1, 1995

This section of the FEDERAL REGISTER contains notices to the public of the proposed issuance of rules and regulations. The purpose of these notices is to give interested persons an opportunity to participate in the rule making prior to the adoption of the final rules.

FEDERAL HOUSING FINANCE BOARD

12 CFR Part 960

[No. 95–37]

Amendment of Affordable Housing Program Regulation; Affordable Housing Program Application Requirements

AGENCY: Federal Housing Finance Board.

ACTION: Proposed rule.

SUMMARY: The Federal Housing Finance Board (Board) is proposing to amend its regulation governing the Affordable Housing Program (AHP) to provide the Federal Home Loan Banks (Banks) with the authority to limit the maximum amount of AHP subsidy that may be requested for a given AHP funding period in the following ways: a uniform limit per member; a limit per project application; a limit per project unit; or a limit per amount of AHP direct subsidy per project application. A Bank would have the authority to establish any other subsidy limit or substantive AHP application requirement not specifically provided for in the AHP regulation, only if such subsidy limit or substantive AHP application requirement has received the prior approval of the Board. A Bank would have to consult with its Advisory Council in establishing its subsidy limits or substantive AHP application requirements. Any subsidy limit or AHP application requirement established by a Bank would have to apply equally to all members.

The Board requests comments on this proposal. In addition, the Board requests comments on whether the AHP regulation also should be amended to authorize the Banks in their discretion to: Establish AHP subsidy limits based on the level of a member's mortgage-related assets or its use of Bank credit products; establish other specified types of AHP subsidy limits that would promote AHP goals; limit or prohibit AHP applications from out-of-district projects; or require involvement by members in an AHP project as a threshold criterion in order to be considered for scoring and approval of AHP funding.

DATES: Comments on this proposed rule must be received in writing on or before December 18, 1995.

ADDRESSES: Send comments to: Elaine L. Baker, Executive Secretary, Federal Housing Finance Board, 1777 F Street, N.W., Washington, DC 20006. Comments will be available for public inspection at this address.

FOR FURTHER INFORMATION CONTACT: Diane E. Dorius, Deputy Director, Community Investment Program & Policy Division, Office of Housing Finance, (202) 408–2576; Sharon B. Like, Attorney-Adviser, Office of General Counsel, (202) 408–2930, Federal Housing Finance Board, 1777 F Street, N.W., Washington, DC 20006.

SUPPLEMENTARY INFORMATION:

I. Statutory and Regulatory Background

A. AHP Statutory and Regulatory Requirements

Section 10(j)(1) of the Federal Home Loan Bank Act (Bank Act) requires each Bank to establish a program to subsidize the interest rate on advances to members engaged in lending for long term, low- and moderate-income, owner-occupied and affordable rental housing at subsidized interest rates. *See* 12 U.S.C. 1430(j)(1). While requiring the Banks to make subsidized advances to their members, section 10(j) of the Bank Act is silent as to whether a Bank may impose limits on the amount of AHP subsidy a member may obtain. The Board is required to promulgate regulations governing the AHP. *See id.* sec. 1430(j)(9); 12 CFR part 960.

Under the Bank Act and the Board's AHP regulation, each Bank must make a specified annual contribution to fund its AHP. *See* 12 U.S.C. 1430(j)(5); 12 CFR 960.10. While the Bank Act does not specifically address the method by which the Banks' required annual contribution to the AHP is to be allocated among potential recipients, the AHP regulation establishes threshold criteria that applications must satisfy and a competitive application scoring process to be used to determine the distribution of AHP funds. *See* 12 CFR 960.5.

Under the AHP regulation, during each calendar year, each Bank accepts applications for funds from its members by specific application due dates during two of four quarterly funding periods. *See id.* § 960.4(a). Each Bank must notify its members of the approximate amount of annual AHP funds available and the approximate amount to be offered in each funding period. *See id.* § 960.4(b). Applications must contain detailed information described in the AHP regulation. *See id.* § 960.4(c). AHP funds are awarded to the applicants whose applications score the highest, pursuant to the scoring criteria set forth in the AHP regulation, among all the applications received by the Bank in that funding period. *See* id. § 960.5(f). It was anticipated that, in this way, the best, most competitive projects would be funded with AHP subsidies.

B. Current Bank Policies on AHP Subsidy Limits, Member Involvement, and Out-of-District AHP Projects

1. Current Bank Policies

Pursuant to prior legal advice that, absent guidance from or definitive action by the Board on specific policies and statutory interpretations, the Banks had to determine for themselves whether their actions were consistent with a reasonable interpretation of the AHP provisions of the Bank Act and AHP regulation, a number of Banks adopted AHP policies that impose requirements in addition to, or different from, the comprehensive AHP application requirements contained in the Board's AHP regulation.

More specifically, several Banks unilaterally have imposed maximum limits on the amount of AHP subsidy that may be requested in a given AHP funding period, including limits applicable: per member; per project application; per project unit; and per amount of AHP direct subsidy per project application. One Bank has adopted member subsidy limits that are based on the level of a member's use of Bank credit products in the preceding year. Another Bank has established a policy prohibiting members from submitting AHP applications for projects located outside of the Bank's district.

Yet another Bank has adopted a threshold criterion that a project must include member involvement in order to be scored and approved for AHP funding, through: financing other than through an AHP direct subsidy;

servicing project loans at no cost to the project sponsor; making cash contributions of $500 per project unit; providing a minimum 100 hours of volunteer labor per unit provided by employees of the member; or contributing land or real estate owned by the member to be used in the project.

2. Reasons Provided for Policies

None of the Bank policies discussed above has been acted upon by the Board prior to issuance of this proposed rule. All of the policies presumably have been adopted pursuant to determinations by the Banks that these policies were consistent with a reasonable interpretation of the Bank Act and AHP regulation.

One reason that has been expressed for permitting various AHP subsidy limits is that they encourage greater participation by members in the AHP. Section 10(j) does not explicitly require or encourage widespread member participation as a goal of the AHP. On the other hand, the legislative history of the AHP statutory provisions does indicate that Congress was aware of ''uneven use of similar special advance programs maintained by the [Banks] in the past and the reluctance of some of the [Banks] to actively encourage their member institutions to address critical community investment and affordable housing needs.'' *See* Conference Report accompanying Financial Institutions Reform, Recovery and Enforcement Act of 1989, H.R. Conf. Rep. No. 101–222, 101st Cong., 1st Sess. (Aug. 4, 1989) at 429. The principle of encouraging even administration of special advances programs among the Banks arguably also could be applied within each Bank, *i.e.*, to encouraging the use of AHP programs by all members within the Bank, on a broad basis, in order to meet community investment and affordable housing needs.

3. Reasons for Change

In light of the level of detail set forth in the AHP regulation, which includes particularized filing requirements (down to specifying the dates by which applications must be filed), details of the required contents of applications, and explicit procedures for applications review, *see* 12 CFR 960.4, 960.5, the Board is concerned that some forms of additional substantive AHP application requirements may tend to undermine the regulatory scheme. The Board would prefer that the regulation provide flexibility through the establishment of clear standards under which the Banks must operate. The Board also is mindful of the importance of ensuring that the AHP remain responsive to the unique circumstances within each Bank District, and that program standards not hamper responsive local administration of the AHP.

The proposed rule would allow the Banks to establish the listed AHP application requirements, as well as any other subsidy limit or substantive AHP application requirement not specifically provided for in the AHP regulation, only if such other subsidy limit or substantive application requirement has received the prior approval of the Board. The Board requests comment on whether this or some other approach would best maintain the appropriate balance between clear regulatory standards and responsiveness and flexibility for the program.

The Board wishes to emphasize that the proposed rule is meant to clarify the regulatory scheme and should not be construed as representing a retreat by the Board from its consideration of the decentralization of the AHP by giving the Banks greater flexibility and control in implementing their AHP programs.

None of the Bank policies discussed above was addressed or noticed for comment in the Board's proposed AHP regulation issued in January 1994. *See* 59 Fed. Reg. 1323 (Jan. 10, 1994). In order to ensure that full consideration is given to the consequences of the proposed rule, the Board is requesting comments on any provisions that should be added to the regulation for any currently existing Bank AHP application policies or any other substantive AHP application requirements a Bank may wish to impose that are not specifically provided for in the AHP regulation.

II. Analysis of the Proposed Rule

A. Notice to Members of Subsidy Limits

Section 960.4(b)(1) of the proposed rule requires each Bank to notify members of the applicability of any subsidy limits or other application requirements established pursuant to section 960.4(b) of the proposed rule.

B. Per Member Limits

Section 960.4(b)(2) of the proposed rule provides that a Bank may establish a uniform maximum dollar limit on the amount of AHP subsidy, or a uniform maximum limit on the percentage of total available AHP subsidy, that may be requested by a member in a given AHP funding period.

Limiting the amount of subsidy that may be requested by a member may prevent a small number of members from receiving all of the subsidy, thereby encouraging participation by a greater number of members in the AHP. While there may be an effect on the AHP regulatory program goal of promoting competition if highly competitive projects have difficulty finding available members that have not exceeded their limits to submit applications for them, sufficient numbers of members should be available to handle applications for AHP funds. Accordingly, any noncompetitive effect of per member subsidy limits likely would be minimal in comparison to the benefit of greater member participation in the AHP.

The proposed rule does not authorize a Bank to establish AHP subsidy limits that are based on the level of a member's mortgage-related assets or its use of Bank credit products. *See* further discussion in III.D. below.

C. Per Project Application Direct Subsidy Limits

Section 960.4(b)(2) of the proposed rule provides that a Bank may limit the maximum amount of AHP direct subsidy that may be requested per project application, in a given AHP funding period.

Such a limit may promote greater member involvement in the AHP by encouraging more members to borrow AHP subsidized advances and, in turn, lend their own funds to borrowers, thereby building greater member affordable housing lending capacity and expertise. If members' own funds were at risk as a result of such a limit, members would have greater incentive to underwrite and monitor projects for AHP compliance and financial feasibility. Direct subsidies, which, in some cases, are passed on by members to borrowers without members putting any of their own funds at risk, do not promote these goals.

A direct subsidy limit would not prevent competitive projects seeking direct subsidies from being funded; it merely would cause those projects to be funded at lower levels, with the gaps in funding made up from other funding sources. There may be an effect on the AHP regulatory program goal of promoting competition if otherwise highly competitive projects that need a large amount of direct subsidy have difficulty finding other available sources for such funding, and therefore remain financially unfeasible. However, any noncompetitive effect of direct subsidy limits may be outweighed by the benefit of greater member involvement in the AHP.

D. Per Project Application or Per Project Unit Limits

Section 960.4(b)(2) of the proposed rule provides that a Bank may limit the

maximum amount of AHP subsidy that may be requested per project application or per project unit, in a given AHP funding period.

Per project application or per project unit limits may prevent a small number of projects from receiving all or most of the available AHP funds in a given funding period, thereby encouraging funding of a greater number of AHP projects, which also may benefit housing needs in more areas of the district. Such limits would not prevent competitive projects from being funded; they would merely cause those projects to be funded at lower levels, with the gaps in funding made up from other funding sources, thereby enabling the funding of additional AHP projects. Again, there may be an effect on the AHP regulatory program goal of promoting competition if otherwise highly competitive projects that need a large amount of subsidy have difficulty finding other available sources for funding, and therefore remain financially unfeasible. However, any noncompetitive effect of such limits may be outweighed by the benefit of funding a greater number of AHP projects in the district.

Per project unit limits also conform with the goal of the effectiveness scoring criterion in the AHP regulation to encourage lower levels of AHP subsidy per unit by giving additional scoring points for projects with lower ratios. *See* 12 CFR 960.5(d)(3).

Per project unit limits could have an impact on the AHP statutory and regulatory program goal of promoting funding of units for very low-income households which often need larger subsidies to make the projects financially feasible. *See* 12 U.S.C. 1430(j)(2)(B); 12 CFR 960.3(b), 960.5(b)(1), (2), (d)(1). However, the ability to receive additional scoring points under the AHP regulatory scoring criterion for targeting units for occupancy by very low-income households, *see* 12 CFR 960.5(d)(1), the importance of encouraging efforts to find other available sources of funding and the goal of promoting the funding of a greater number of projects together may outweigh any effect on funding of units for very low-income households.

E. Board Waiver Authority

Section 960.4(b)(3) of the proposed rule provides that a Bank may establish any other subsidy limit or substantive AHP application requirement not specifically provided for in sections 960.4(b) or 960.5(a)(2) of the AHP regulation, only if such subsidy limit or substantive AHP application requirement has received the prior approval of the Board. The Board requests comments on whether such additional subsidy limits or substantive AHP application requirements should depend on whether application of the limit or requirement would adversely affect achievement of the purposes of the AHP provisions of the Bank Act, or upon a showing of good cause.

F. Subsidy Limits Applied Equally to All Members

Section 960.4(b)(4) of the proposed rule provides that any subsidy limits or AHP application requirements established by a Bank pursuant to section 960.4(b) must be applied equally to all members. *See* further discussion in III.D. below.

G. Bank Consultation With Advisory Council

Sections 960.4(b)(2) and (3) of the proposed rule require that a Bank have consulted with its Advisory Council in establishing any subsidy limits or other substantive AHP application requirements pursuant to section 960.4(b). Advisory Council members typically have affordable housing expertise that may be very useful to the Banks in determining the affordable housing needs of the Bank district and how any subsidy limit or other substantive AHP application requirement would promote those needs.

III. Related Request for Comments

A. Other Types of Subsidy Limits

The Board requests comments on any other types of subsidy limits that would promote AHP goals that should be considered appropriate for establishment by a Bank. For example, a maximum limit on the amount of AHP subsidy that may be requested per sponsor arguably might be appropriate to encourage greater participation by sponsors in the AHP, increase the affordable housing development capacity of more sponsors, and encourage the creation of more sponsors, especially where one large or particularly active sponsor in a district is winning a large portion of the Bank's AHP funds.

B. Limiting or Prohibiting AHP Applications From Out-of-District Projects

The Board requests comments on whether the Banks should have authority to limit or prohibit members from submitting AHP applications from projects located outside of the Bank's district, and the reasons for or against such authority.

One reason expressed for imposing such a restriction is that the Bank's Advisory Council, whose members are drawn from the Bank's district and who are required to advise on the low- and moderate-income housing programs and needs of the district, do not have the familiarity and expertise to provide guidance on projects located outside the district. *See* 12 U.S.C. 1430(j)(11). However, it also is noted that Advisory Council members, while most familiar with the housing needs of their local communities, often are very familiar with the network of affordable housing providers that are active across the country and could advise the Banks on affordable housing issues of general applicability.

Another reason given for imposing an out-of-district restriction is that such a restriction is warranted when there is an overwhelming demand for AHP funds within the district.

In addition, it is argued that the administrative costs incurred by the Bank to monitor out-of-district projects for compliance with the AHP statutory and regulatory requirements would be significantly greater than those for in-district projects. However, particularly in Bank districts that cover large geographical areas, it is possible that the cost of monitoring and conducting on-site visits of out-of-district projects would be no greater than the cost of conducting such activities in-district.

Another argument made in support of an out-of-district restriction is that sponsors of out-of-district projects would not be precluded from participating in the AHP, as they could apply for AHP funds through a member of another Bank.

It also is argued that an out-of-district restriction will have only a limited effect on the desirability of Bank membership, since there are other benefits to membership besides access to the AHP.

Another argument made is that out-of-district projects located in lower-cost districts may be able to compete more successfully for AHP funds against higher-cost projects located in the district.

It also is noted that one or a few large multistate members have the ability to win a substantial portion of AHP funds for out-of-district projects, thereby resulting in significantly less AHP funds for use by other members and sponsors within the district.

The Bank Act and Board regulations provide that an eligible institution may only be a member of and obtain advances from one Bank, even though members may do business through branch offices outside that Bank district.

See id. sec. 1424(b); 12 CFR 933.5(a). The Bank Act does not specifically prohibit advances for AHP or other purposes from being used out of district. *See* 12 U.S.C. 1424(b); 1430(a), (j). A Bank's required annual contribution to the AHP is based on a percentage of the Bank's net earnings in the previous year. *See id.* sec. 1430(j)(5). Those net earnings are derived, in part, from advances made to members that have branches outside the Bank district in which they are a member. Preventing access to AHP funds by a member's out-of-district branches would deny that member the opportunity to take advantage of a source of funds it was, in part, responsible for generating.

In addition, it would preclude a member that does business outside the Bank district where it is a member from applying for AHP funds on behalf of its out-of-district customers or using AHP funds to meet its Community Reinvestment Act obligations in those out-of-district areas. It is noted that, due to recent legislative and regulatory changes, interstate banking is increasing throughout the country and it is likely that more and more Bank members will be operating across state lines. To access the AHP, out-of-district customers would have to seek out a member of the Bank in whose district their state is located.

It also is argued that out-of-district restrictions, even if desirable, are not warranted at this time because the number of current members with out-of-district branches and the number of applications for out-of-district projects are minimal.

Further, to address the situation where one large multistate member is winning a substantial portion of AHP funds for out-of-district projects, uniform limits on the amount of AHP subsidy for which each member may apply, such as those currently imposed by a number of Banks (see discussion in I.B.1. above), may have a greater likelihood of broadening member participation in the AHP.

It also is noted that out-of-district restrictions may result in the selection of less competitive in-district projects, i.e., projects that would have scored lower than projects that could not be submitted because they are located outside the district. This could undermine the Board's AHP regulatory program goal of promoting competition in the AHP selection process such that only the best, most competitive projects are selected for funding. *See* 12 CFR 960.4, 960.5.

C. Member Involvement as Threshold Criterion

The Board requests comments on whether the Banks should have authority to require certain types of member involvement in a project as a threshold criterion the project must satisfy in order to be considered for scoring and approval for AHP funding. Member involvement could include, for example: providing financing other than a direct subsidy to the project; servicing project loans at no cost to the sponsor of the project; contributing a minimum cash amount per unit to the project; providing a minimum number of hours of volunteer labor per project unit from its employees; or contributing land or real estate owned by the member to be used in the project.

Where members' own funds and contributions are at risk, members would be more likely to be involved in individual AHP projects, thereby building member affordable housing lending capacity and expertise, and creating greater incentives for members to underwrite and monitor projects for AHP compliance and financial feasibility. In the Board's proposed AHP regulation issued for comment in January, 1994, the Board proposed including the extent of member involvement in a project as a separate scoring criterion, rather than as a threshold requirement that members must meet in order for projects even to be considered for scoring and approval of AHP funding. *See* 59 Fed. Reg. 1323, 1335, 1354 (Jan. 10, 1994). The Board requests comments on whether the extent of member involvement in a project should be included as a threshold criterion, scoring criterion or not at all in the final AHP regulation and, if it should be included, how it should be implemented.

D. Limits Based on the Level of a Member's Mortgage-Related Assets or Its Use of Bank Credit Products

The proposed rule does not authorize a Bank to establish AHP subsidy limits based on the level of a member's mortgage-related assets or its use of Bank credit products. The Board requests comments on whether the Banks should have authority to impose AHP subsidy limits based on the level of a member's mortgage-related assets or its use of Bank credit products. Commenters should address how such subsidy limits would advance the overall goals of the AHP, the reasons for or against such linkage, whether any such limits are compatible with the requirement in proposed section 960.4(b)(4) that subsidy limits be applied equally to all members, and whether any such limits are permissible under section 7(j) of the Bank Act, which requires the Banks to administer their affairs fairly and impartially and without discrimination in favor of or against any member borrower. *See* 12 U.S.C. 1427(j).

One reason that has been expressed for imposing such limits is that they would encourage broader participation by members in the AHP. Involving more members in the AHP could give project sponsors more options for financing AHP projects, and provide experience and education to more members that could help them develop additional capacity to engage in affordable housing lending.

However, imposing limits based on levels of member mortgage-related assets or borrowings may not achieve this goal if members with high levels of mortgage-related assets or borrowings who already participate in the AHP would be allowed to apply for and win the additional AHP subsidies no longer available to those members subject to the limits. Uniform limits on the amount of AHP subsidy for which each member may apply, such as those currently imposed by a number of Banks (see discussion in I.B.1. above), may have a greater likelihood of increasing member participation in the AHP.

Another objective expressed for imposing subsidy limits based on member use of Bank credit products is that they would increase the pool of available AHP funds by encouraging greater borrowing from the Bank and therefore increasing Bank earnings, from which AHP funds are derived. Increased AHP funds could be used by the Bank to finance more AHP projects, thereby benefiting more low- and moderate-income households and furthering the housing finance mission of the Bank System. *See id.* sec. 1422a(a)(3)(ii). The argument also is made that members that contribute to Bank earnings by borrowing should have greater access than non-borrowing members to AHP funds derived from such earnings.

The Bank Act does not restrict availability of AHP subsidies to ''borrowing'' members. Nor does it specify any correlation between the member's contribution to Bank earnings and its access to AHP funds. Bank earnings are affected by economic factors other than the amount of outstanding advances of members participating in the AHP. Thus, even non-borrowing members contribute to Bank earnings and, therefore, to the AHP fund. The limits also may not enlarge the AHP fund by increasing member borrowing because small

member institutions, by virtue of their limited asset size, would be incapable of increasing or unwilling to increase their borrowings (due to the increased cost of borrowing resulting from investing in additional Bank stock) just to receive ''preferred treatment'' under an AHP subsidy limits policy.

Another possible reason for limiting access to AHP subsidies based on a member's level of mortgage-related assets may be to encourage members to do more home financing, consistent with the provisions of the Bank Act that impose less burdensome advances and stock requirements on institutions that devote a greater percentage of their assets to housing finance (qualified thrift lenders). *See id.* sec. 1430(e)(1), (2); 12 CFR 935.13. However, such a limit may defeat this goal since members with lower levels of mortgage-related assets would have limited access to AHP subsidies which they could use for such housing finance purposes.

IV. Regulatory Flexibility Act

The proposed rule applies only to the Banks, which do not come within the meaning of ''small entities,'' as defined in the Regulatory Flexibility Act. *See* 5 U.S.C. 601(6). Therefore, in accordance with 5 U.S.C. 605(b), the Board hereby certifies that this proposed rule, if promulgated as a final rule, will not have a significant economic impact on a substantial number of small entities.

List of Subjects for 12 CFR Part 960

Banks, banking, Credit, Federal home loan banks, Housing.

Accordingly, part 960 of title 12 of its Code of Federal Regulations is hereby proposed to be amended as follows:

SUBCHAPTER E—AFFORDABLE HOUSING

PART 960—AFFORDABLE HOUSING PROGRAM

1. The authority citation for part 960 continues to read as follows:

Authority: 12 U.S.C. 1422a, 1422b, 1430(j).

2. Paragraph (b) of § 960.4 is revised to read as follows:

960.4 Applications for funding.

* * * * *

(b)(1) Each Bank shall notify its members of the approximate amount of annual program funds available for the District, the approximate amount to be offered in each funding period, and the applicability of any subsidy limits or other application requirements established pursuant to this paragraph (b). The amount of funds made available in each offering should be comparable.

(2) A Bank, after consultation with its Advisory Council, may limit the maximum dollar amount of subsidy, or the maximum percentage of total available subsidy, that may be requested in a given funding period in the following ways:

(i) A uniform limit per member;

(ii) A limit per project application, including limits varying according to project size;

(iii) A limit per project unit; or

(iv) A limit on the amount of direct subsidy per project application.

(3) A Bank, after consultation with its Advisory Council, may establish any other subsidy limit or substantive application requirement not specifically provided for in this paragraph (b) or § 960.5(a)(2), only if such subsidy limit or substantive application requirement has received the prior approval of the Board.

(4) Any subsidy limit or application requirement established by a Bank pursuant to this paragraph (b) must apply equally to all members.

* * * * *

Dated: October 25, 1995.

By the Federal Housing Finance Board.

Bruce A. Morrison,

Chairman.

[FR Doc. 95–27023 Filed 10–31–95; 8:45 am]

BILLING CODE 6725–01–U

DEPARTMENT OF TRANSPORTATION

Federal Aviation Administration

14 CFR Part 23

[Docket No. 27316 Notice No. 93–5]

RIN 2120–AE86

Accelerated Stalls in Commuter Category Airplanes

AGENCY: Federal Aviation Administration, DOT.

ACTION: Notice of Proposed Rulemaking (NPRM); Withdrawal.

SUMMARY: The FAA is withdrawing a previously published Notice of Proposed Rulemaking (NPRM) that proposed to eliminate the certification requirement to demonstrate an accelerated entry stall for commuter category airplanes. The proposed rule would have removed an unwarranted hazard during flight demonstrations required for airplane type certification, and would not compromise passenger safety. This hazard was a direct result of the high power-to-weight rations of new commuter airplanes. The FAA has proposed a similar requirement in the Airworthiness Standards; Flight Proposals Based on European Joint Aviation Requirements, Docket No. 27807, Notice No. 94–22 (59 FR 37878), published July 25, 1994.

FOR FURTHER INFORMATION CONTACT: Lowell Foster, Standards Office (ACE–111), Small Airplane Directorate, Aircraft Certification Service, Federal Aviation Administration, 601 East 12th Street, Kansas City, Missouri 64106; telephone (816) 426–5688.

SUPPLEMENTARY INFORMATION: On June 7, 1993, the FAA published Notice of Proposed Rulemaking No. 93–5 (58 FR 32034), Docket No. 27316, to announce its intention to amend 14 CFR part 23. Concurrent with publication of that notice, the FAA published notice of availability of a proposed change to AC 23–8A.

The FAA proposed a similar requirement in Notice No. 94–22 (59 FR 37878; July 25, 1994), Docket No. 27807, which covers the accelerated stall demonstration and would harmonize it with the Joint Aviation Requirements. The proposed requirement, based on the European rules, provides relief from high power settings for the accelerated stall demonstration, removing the condition that created the hazard that was the subject of the petition for rulemaking. Therefore the FAA considers that Notice No. 94–22 addresses the petitioner's original concerns for hazardous flight demonstrations, even though it is not identical to the original rule change proposed by the petitioner. Accordingly, the Accelerated Stalls Notice of Proposed Rulemaking and the draft advisory circular, published in the Federal Register on June 7, 1993 (58 FR 32034), are withdrawn.

Comments submitted to Docket No. 27316 are being reviewed, and will be disposed of as part of Docket No. 27807.

Issued in Washington, DC on October 25, 1995.

Daniel P. Salvano,

Acting Director, Aircraft Certification Service.

[FR Doc. 95–26993 Filed 10–31–95; 8:45 am]

BILLING CODE 4910–13–M

---

14 CFR Part 39

[Docket No. 95–SW–04–AD]

Airworthiness Directives; Societe Nationale Industrielle Aerospatiale and Eurocopter France Model AS 350B, BA, B1, B2, and D, and Model AS 355E, F, F1, F2, and N Helicopters

AGENCY: Federal Aviation Administration, DOT.

ACTION: Notice of proposed rulemaking (NPRM).

SUMMARY: This document proposes the adoption of a new airworthiness directive (AD) that is applicable to Societe Nationale Industrielle Aerospatiale and Eurocopter France (Eurocopter France) Model AS 350B, BA, B1, B2, and D and Model AS 355E, F, F1, F2, and N helicopters, without an autopilot installed. This proposal would require a visual inspection to determine whether the cyclic pitch change control rod (rod) end fittings were safetied, and removal and replacement of the rod if the rod end fittings were not safetied. This proposal is prompted by a manufacturer's report that some of the rod end fittings had not been safetied at the factory. The actions specified by the proposed AD are intended to prevent loss of tightening torque on the adjustment nuts of the rod, shifting of the neutral point of the cyclic stick, reduction in the amount of available movement of the cyclic stick in the roll axis, and subsequent reduction in the controllability of the helicopter.

DATES: Comments must be received by January 2, 1996.

ADDRESSES: Submit comments in triplicate to the Federal Aviation Administration (FAA), Office of the Assistant Chief Counsel, Attention: Rules Docket No. 95–SW–04–AD, 2601 Meacham Blvd., Room 663, Fort Worth, Texas 76137. Comments may be inspected at this location between 9:00 a.m. and 3:00 p.m., Monday through Friday, except Federal holidays.

FOR FURTHER INFORMATION CONTACT: Mr. Richard Monschke, Aerospace Engineer, FAA, Rotorcraft Directorate, Rotorcraft Standards Staff, 2601 Meacham Blvd., Fort Worth, Texas 76137, telephone (817) 222–5116, fax (817) 222–5961.

SUPPLEMENTARY INFORMATION:

Comments Invited

Interested persons are invited to participate in the making of the proposed rule by submitting such written data, views, or arguments as they may desire. Communications should identify the Rules Docket number and be submitted in triplicate to the address specified above. All communications received on or before the closing date for comments, specified above, will be considered before taking action on the proposed rule. The proposals contained in this notice may be changed in light of the comments received.

Comments are specifically invited on the overall regulatory, economic, environmental, and energy aspects of the proposed rule. All comments submitted will be available, both before and after the closing date for comments, in the Rules Docket for examination by interested persons. A report summarizing each FAA-public contact concerned with the substance of this proposal will be filed in the Rules Docket.

Commenters wishing the FAA to acknowledge receipt of their comments submitted in response to this notice must submit a self-addressed, stamped postcard on which the following statement is made: ''Comments to Docket No. 95–SW–04–AD.'' The postcard will be date stamped and returned to the commenter.

Availability of NPRMs

Any person may obtain a copy of this NPRM by submitting a request to the FAA, Office of the Assistant Chief Counsel, Attention: Rules Docket No. 95–SW–04–AD, 2601 Meacham Blvd., Room 663, Fort Worth, Texas 76137.

Discussion

The Direction Generale De L'Aviation Civile (DGAC), which is the airworthiness authority for France, has notified the FAA that an unsafe condition may exist on Eurocopter France Model AS 350B, BA, B1, B2, and D and Model AS 355E, F, F1, F2, and N helicopters, without an autopilot installed. The DGAC advises that the manufacturer discovered that some rod end fittings have not been safetied at the factory.

Eurocopter France has issued Eurocopter Service Bulletin No. 01.38, dated June 26, 1994, for the Model AS 355 series helicopters, and Eurocopter Service Bulletin No. 01.42, dated June 28, 1994, for the Model AS 350 series helicopters, which specifies a visual inspection to determine whether the rod end fittings have been safetied; reinstallation of the forward lower fairing if the rod end fittings have been safetied, and removal and replacement of the rod with an airworthy rod and reinstallation of the forward lower fairing if the rod end fittings have not been safetied. The DGAC classified this service bulletin as mandatory and issued AD 94–179–051(B) and AD 94–180–069(B), both dated August 3, 1994, in order to assure the continued airworthiness of these helicopters in France.

This helicopter model is manufactured in France and is type certificated for operation in the United States under the provisions of section 21.29 of the Federal Aviation Regulations (14 CFR 21.29) and the applicable bilateral airworthiness agreement. Pursuant to this bilateral airworthiness agreement, the DGAC has kept the FAA informed of the situation described above. The FAA has examined the findings of the DGAC, reviewed all available information, and determined that AD action is necessary for products of this type design that are certificated for operation in the United States.

Since an unsafe condition has been identified that is likely to exist or develop on other Eurocopter France Model AS 350B, BA, B1, B2, and D and Model AS 355E, F, F1, F2, and N helicopters without an autopilot installed, of the same type design registered in the United States, the proposed AD would require a visual inspection to confirm that the rod end fittings are safetied in accordance with the manufacturer's service information, and removal and replacement of the rod, if necessary.

The FAA estimates that 498 helicopters of U.S. registry would be affected by this proposed AD, that it would take approximately one-fourth of a work hour per helicopter to inspect the rod end fittings, and 1 work hour to remove and reinstall the rod, if necessary, and that the average labor rate is $60 per work hour. Required parts would be provided by the manufacturer. Based on these figures, the total cost impact of the proposed AD on U.S. operators is estimated to be $37,350.

The regulations proposed herein would not have substantial direct effects on the States, on the relationship between the national government and the States, or on the distribution of power and responsibilities among the various levels of government. Therefore, in accordance with Executive Order 12612, it is determined that this proposal would not have sufficient federalism implications to warrant the preparation of a Federalism Assessment.

For the reasons discussed above, I certify that this proposed regulation (1) is not a ''significant regulatory action'' under Executive Order 12866; (2) is not a ''significant rule'' under the DOT Regulatory Policies and Procedures (44 FR 11034, February 26, 1979); and (3) if promulgated, will not have a significant economic impact, positive or negative, on a substantial number of small entities under the criteria of the Regulatory Flexibility Act. A copy of the draft regulatory evaluation prepared for this action is contained in the Rules Docket. A copy of it may be obtained by contacting the Rules Docket at the location provided under the caption **ADDRESSES.**

List of Subjects in 14 CFR Part 39

Air transportation, Aircraft, Aviation safety, Safety.

The Proposed Amendment

Accordingly, pursuant to the authority delegated to me by the Administrator, the Federal Aviation Administration proposes to amend part 39 of the Federal Aviation Regulations (14 CFR part 39) as follows:

PART 39—AIRWORTHINESS DIRECTIVES

1. The authority citation for part 39 continues to read as follows:

Authority: 49 U.S.C. 106(g), 40101, 40113, 44701.

§ 39.13 [Amended]

2. Section 39.13 is amended by adding a new airworthiness directive to read as follows:

Societe Nationale Industrielle Aerospatiale and Eurocopter France: Docket No. 95–SW–04–AD.

Applicability: Model AS 350B, BA, B1, B2, and D, and Model AS 355E, F, F1, F2, and N helicopters, with cyclic pitch change control rod, part number (P/N) 704A34–113–279, installed, and without an autopilot installed, certificated in any category.

Note 1: This AD applies to each helicopter identified in the preceding applicability provision, regardless of whether it has been modified, altered, or repaired in the area subject to the requirements of this AD. For helicopters that have been modified, altered, or repaired so that the performance of the requirements of this AD is affected, the owner/operator must use the authority provided in paragraph (d) to request approval from the FAA. This approval may address either no action, if the current configuration eliminates the unsafe condition, or different actions necessary to address the unsafe condition described in this AD. Such a request should include an assessment of the effect of the changed configuration on the unsafe condition addressed by this AD. In no case does the presence of any modification, alteration, or repair remove any helicopter from the applicability of this AD.

Compliance: Required as indicated, unless accomplished previously.

To prevent loss of tightening torque on the adjustment nuts of the cyclic pitch change control rod, shifting of the neutral position of the cyclic stick, reduction in the amount of available movement of the cyclic stick in the roll axis, and subsequent reduction in the controllability of the helicopter, accomplish the following:

(a) Within 100 hours time-in-service (TIS) after the effective date of this AD, remove the forward lower fairing and visually inspect the cyclic pitch change control rod (rod), P/N 704A34–113–279, to determine whether the end fittings have been safetied (see Figure 1, Detail 1, tabs bent around the adjustment nut).

(b) If the visual inspection indicates that the rod end fittings have been safetied, reinstall the forward lower fairing.

(c) If the visual inspection indicates that the rod end fittings have not been safetied (see Figure 1, Detail 2, tabs not bent around the adjustment nut), accomplish the following in accordance with the applicable maintenance manual:

(1) Immobilize the cyclic control.

BILLING CODE 4910–13–U

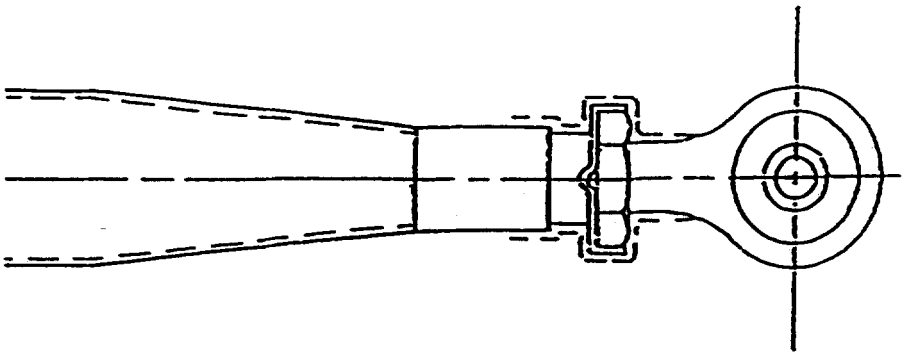

DETAIL 1

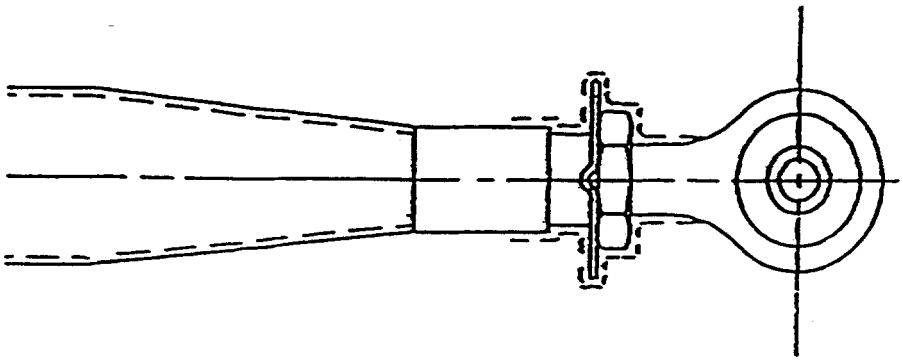

DETAIL 2

Figure 1

BILLING CODE 4910–13–C

(2) Remove the rod and replace it with an airworthy rod on which the rod end fittings have been safetied.

(3) Reinstall the forward lower fairing.

(4) Verify proper operation of the cyclic control.

(d) An alternative method of compliance or adjustment of the compliance time that provides an acceptable level of safety may be used when approved by the Manager, Rotorcraft Standards Staff, FAA, Rotorcraft Directorate. Operators shall submit their requests through an FAA Principal Maintenance Inspector, who may concur or comment and then send it to the Manager, Rotorcraft Standards Staff.

Note 2: Information concerning the existence of approved alternative methods of compliance with this AD, if any, may be obtained from the Rotorcraft Standards Staff.

(e) Special flight permits may be issued in accordance with sections 21.197 and 21.199 of the Federal Aviation Regulations (14 CFR 21.197 and 21.199) to operate the helicopter to a location where the requirements of this AD can be accomplished.

Issued in Fort Worth, Texas, on October 23, 1995.

Eric Bries,

Acting Manager, Rotorcraft Directorate, Aircraft Certification Service.

[FR Doc. 95–26999 Filed 10–31–95; 8:45 am]

BILLING CODE 4910–13–U

---

14 CFR Part 39

[Docket No. 95–SW–26–AD]

Airworthiness Directives; Bell Helicopter Textron, Inc. Model 214ST Helicopters

AGENCY: Federal Aviation Administration, DOT.

ACTION: Notice of proposed rulemaking (NPRM).

SUMMARY: This document proposes the adoption of a new airworthiness directive (AD) that is applicable to Bell Helicopter Textron, Inc. (BHTI) Model 214ST helicopters with certain tailboom assemblies and a certain emergency float kit installed. This proposal would require initial and repetitive inspections of the tailboom for cracks until modifications of the tailboom are accomplished. This proposal is prompted by several reports of cracks in the lower aft skin of the tailboom assembly. The actions specified by the proposed AD are intended to prevent cracks in the tailboom assembly, which could result in structural failure of the tailboom and subsequent loss of control of the helicopter.

DATES: Comments must be received by January 2, 1996.

ADDRESSES: Submit comments in triplicate to the Federal Aviation Administration (FAA), Office of the Assistant Chief Counsel, Attention: Rules Docket No. 95–SW–26–AD, 2601 Meacham Blvd., Room 663, Fort Worth, Texas 76137. Comments may be inspected at this location between 9:00 a.m. and 3:00 p.m., Monday through Friday, except Federal holidays.

The service information referenced in the proposed rule may be obtained from Bell Helicopter Textron, Inc., Attention: Customer Support, P.O. Box 482, Fort Worth, Texas 76101. This information may be examined at the FAA, Office of the Assistant Chief Counsel, 2601 Meacham Blvd., Room 663, Fort Worth, Texas.

FOR FURTHER INFORMATION CONTACT: Mr. Tom Henry, Aerospace Engineer, FAA, Rotorcraft Directorate, Rotorcraft Certification Office, 2601 Meacham Blvd., Fort Worth, Texas 76137, telephone (817) 222–5158, fax (817) 222–5959.

SUPPLEMENTARY INFORMATION:

Comments Invited

Interested persons are invited to participate in the making of the proposed rule by submitting such written data, views, or arguments as they may desire. Communications should identify the Rules Docket number and be submitted in triplicate to the address specified above. All communications received on or before the closing date for comments, specified above, will be considered before taking action on the proposed rule. The proposals contained in this notice may be changed in light of the comments received.

Comments are specifically invited on the overall regulatory, economic, environmental, and energy aspects of the proposed rule. All comments submitted will be available, both before and after the closing date for comments, in the Rules Docket for examination by interested persons. A report summarizing each FAA-public contact concerned with the substance of this proposal will be filed in the Rules Docket.

Commenters wishing the FAA to acknowledge receipt of their comments submitted in response to this notice must submit a self addressed, stamped postcard on which the following statement is made: ''Comments to Docket No. 95–SW–26–AD.'' The postcard will be date stamped and returned to the commenter.

Availability of NPRMs

Any person may obtain a copy of this NPRM by submitting a request to the FAA, Office of the Assistant Chief Counsel, Attention: Rules Docket No. 95–SW–26–AD, 2601 Meacham Blvd., Room 663, Fort Worth, Texas 76137.

Discussion

This document proposes to adopt a new AD that is applicable to BHTI Model 214ST helicopters, serial number (S/N) 28101 through 28132, with a tailboom assembly, part number (P/N) 214–031–003–111 or 214–031–003–277, and with an emergency float kit, P/N 214–706–120, installed. There have been reports of cracks found in five Model 214ST helicopter tailbooms with the emergency float kit installed. The cracks were found in the lower aft skin between boom stations 243.76 and 284.38. This condition, if not corrected, could result in structural failure of the tailboom and subsequent loss of control of the aircraft.

The FAA has reviewed Bell Helicopter Textron, Inc. Alert Service Bulletin 214ST–95–72 (ASB), dated July 24, 1995, which describes procedures for a visual inspection of the affected tailboom area of Model 214ST helicopters with emergency float kits installed. The ASB also describes a modification to the helicopters that adds internal stiffeners and doublers to the tailboom, and replaces the existing access door frame, P/N 214–030–325, with a redesigned frame of increased thickness.

Since an unsafe condition has been identified that is likely to exist or develop on certain other BHTI Model 214ST helicopters of the same type design, the proposed AD would require, for Model 214ST helicopters, S/N 28101 through 28132, with a tailboom assembly, P/N 214–031–003–111 or 214–031–003–277, and with an emergency float kit, P/N 214–706–120, installed, inspections of the tailboom assembly for cracks within 250 hours time-in-service (TIS) or at the next 180-day float inspection, and thereafter, at each 180-day float inspection until certain modifications of the tailboom are accomplished. The modifications, which are to be accomplished if any crack is found in the tailboom or on or before accumulating an additional 500 hours TIS after the effective date of this AD, whichever occurs first, include installing stiffeners and doublers in the tailboom, and replacing the access door frame with a thicker access door frame. The actions would be required to be accomplished in accordance with the procedures contained in BHTI Alert Service Bulletin (ASB) 214ST–95–72, dated July 24, 1995.

The FAA estimates that six helicopters of U.S. registry would be affected by this proposed AD, that it would take approximately 20 work

hours per helicopter to accomplish the modifications, approximately 3 work hours per helicopter to accomplish the 250 hours TIS inspection, and that the average labor rate is $60 per work hour. Required parts would cost approximately $1,100 per helicopter. Based on these figures, the total cost impact of the proposed AD on U.S. operators is estimated to be $14,880.

The regulations proposed herein would not have substantial direct effects on the States, on the relationship between the national government and the States, or on the distribution of power and responsibilities among the various levels of government. Therefore, in accordance with Executive Order 12612, it is determined that this proposal would not have sufficient federalism implications to warrant the preparation of a Federalism Assessment.

For the reasons discussed above, I certify that this proposed regulation (1) is not a ''significant regulatory action'' under Executive Order 12866; (2) is not a ''significant rule'' under the DOT Regulatory Policies and Procedures (44 FR 11034, February 26, 1979); and (3) if promulgated, will not have a significant economic impact, positive or negative, on a substantial number of small entities under the criteria of the Regulatory Flexibility Act. A copy of the draft regulatory evaluation prepared for this action is contained in the Rules Docket. A copy of it may be obtained by contacting the Rules Docket at the location provided under the caption **ADDRESSES**.

List of Subjects in 14 CFR Part 39

Air transportation, Aircraft, Aviation safety, Safety.

The Proposed Amendment

Accordingly, pursuant to the authority delegated to me by the Administrator, the Federal Aviation Administration proposes to amend part 39 of the Federal Aviation Regulations (14 CFR part 39) as follows:

PART 39—AIRWORTHINESS DIRECTIVES

1. The authority citation for part 39 continues to read as follows:

Authority: 49 USC 106(g), 40101, 40113, 44701.

§ 39.13 [Amended]

2. Section 39.13 is amended by adding a new airworthiness directive to read as follows:

Bell Helicopter Textron, Inc. (BHTI): Docket No. 95–SW–26–AD.

Applicability: Model 214ST helicopters, serial number (S/N) 28101 through 28132, with a tailboom assembly, part number (P/N) 214–031–003–111 or 214–031–003–277 and with an emergency float kit, P/N 214–706–120, installed, certificated in any category.

Note 1: This AD applies to each helicopter identified in the preceding applicability provision, regardless of whether it has been modified, altered, or repaired in the area subject to the requirements of this AD. For helicopters that have been modified, altered, or repaired so that the performance of the requirements of this AD is affected, the owner/operator must use the authority provided in paragraph (d) to request approval from the FAA. This approval may address either no action, if the current configuration eliminates the unsafe condition, or different actions necessary to address the unsafe condition described in this AD. Such a request should include an assessment of the effect of the changed configuration on the unsafe condition addressed by this AD. In no case does the presence of any modification, alteration, or repair remove any helicopter from the applicability of this AD.

Compliance: Required as indicated, unless accomplished previously.

To prevent cracks in the tailboom assembly, structural failure of the tailboom and subsequent loss of control of the helicopter, accomplish the following:

(a) Within the next 250 hours time-in-service (TIS) or at the next 180-day float inspection, whichever occurs first, and thereafter at intervals not to exceed each 180-day float inspection, visually inspect the tailboom assembly for cracks in accordance with the maintenance procedures contained in Part 1 of the Accomplishment Instructions of BHTI Alert Service Bulletin 214ST–95–72, dated July 24, 1995.

(b) Upon discovery of a crack or on or before accumulating an additional 500 hours TIS after the effective date of this AD, whichever occurs first, modify the tailboom assembly in accordance with Part 2 of the Accomplishment Instructions of BHTI Alert Service Bulletin No. 214ST–95–72, dated July 24, 1995.

(c) Modification of the tailboom assembly in accordance with paragraph (b) constitutes terminating action for the requirements of this AD.

(d) An alternative method of compliance or adjustment of the compliance time that provides an acceptable level of safety may be used when approved by the Manager, Rotorcraft Certification Office. Operators shall submit their requests through an FAA Principal Maintenance Inspector, who may concur or comment and then send it to the Manager, Rotorcraft Certification Office.

Note 2: Information concerning the existence of approved alternative methods of compliance with this AD, if any, may be obtained from the Rotorcraft Certification Office.

(e) Special flight permits may be issued in accordance with sections 21.197 and 21.199 of the Federal Aviation Regulations (14 CFR 21.197 and 21.199) to operate the helicopter to a location where the requirements of this AD can be accomplished.

Issued in Fort Worth, Texas, on October 23, 1995.

Eric Bries,

Acting Manager, Rotorcraft Directorate, Aircraft Certification Service.

[FR Doc. 95–27000 Filed 10–31–95; 8:45 am]

BILLING CODE 4910–13–U

---

14 CFR Part 39

[Docket No. 95–NM–115–AD]

Airworthiness Directives; McDonnell Douglas Model DC–8 Series Airplanes Equipped With Swivel-Type Bogie Beams on the Main Landing Gears

AGENCY: Federal Aviation Administration, DOT.

ACTION: Notice of proposed rulemaking (NPRM).

SUMMARY: This document proposes the adoption of a new airworthiness directive (AD) that is applicable to certain McDonnell Douglas Model DC–8 series airplanes. This proposal would require an inspection to detect cracking of the swivel bogie beam lugs, and repair, if necessary. For airplanes on which no cracking is found, this proposal also would require an inspection to detect corrosion of the swivel pin lug surfaces and bores, and modification of the forward bogie beams. This proposal is prompted by reports indicating that swivel pin lugs of the main landing gear (MLG) have failed due to cracks resulting from stress corrosion. The actions specified by the proposed AD are intended to prevent such stress corrosion, which could result in failure of the swivel-type bogie beam of the MLG; this condition could result in a collapse of the MLG during landing.

DATES: Comments must be received by December 28, 1995.

ADDRESSES: Submit comments in triplicate to the Federal Aviation Administration (FAA), Transport Airplane Directorate, ANM–103, Attention: Rules Docket No. 95–NM–115–AD, 1601 Lind Avenue, SW., Renton, Washington 98055–4056. Comments may be inspected at this location between 9:00 a.m. and 3:00 p.m., Monday through Friday, except Federal holidays.

The service information referenced in the proposed rule may be obtained from McDonnell Douglas Corporation, 3855 Lakewood Boulevard, Long Beach, California 90846, Attention: Technical Publications Business Administration, Department C1–L51 (2–60). This information may be examined at the FAA, Transport Airplane Directorate,

1601 Lind Avenue, SW., Renton, Washington; or at the FAA, Transport Airplane Directorate, Los Angeles Aircraft Certification Office (ACO), 3960 Paramount Boulevard, Lakewood, California.

FOR FURTHER INFORMATION CONTACT: Mike Lee, Aerospace Engineer, Airframe Branch, ANM–120L, FAA, Los Angeles Aircraft Certification Office, 3960 Paramount Boulevard, Lakewood, California 90712; telephone (310) 627–5325; fax (310) 627–5210.

SUPPLEMENTARY INFORMATION:

Comments Invited

Interested persons are invited to participate in the making of the proposed rule by submitting such written data, views, or arguments as they may desire. Communications shall identify the Rules Docket number and be submitted in triplicate to the address specified above. All communications received on or before the closing date for comments, specified above, will be considered before taking action on the proposed rule. The proposals contained in this notice may be changed in light of the comments received.

Comments are specifically invited on the overall regulatory, economic, environmental, and energy aspects of the proposed rule. All comments submitted will be available, both before and after the closing date for comments, in the Rules Docket for examination by interested persons. A report summarizing each FAA-public contact concerned with the substance of this proposal will be filed in the Rules Docket.

Commenters wishing the FAA to acknowledge receipt of their comments submitted in response to this notice must submit a self-addressed, stamped postcard on which the following statement is made: ''Comments to Docket Number 95–NM–115–AD.'' The postcard will be date stamped and returned to the commenter.

Availability of NPRMs

Any person may obtain a copy of this NPRM by submitting a request to the FAA, Transport Airplane Directorate, ANM–103, Attention: Rules Docket No. 95–NM–115–AD, 1601 Lind Avenue, SW., Renton, Washington 98055–4056.

Discussion

The FAA has received numerous reports indicating that the swivel pin lug of the forward bogie beam on certain main landing gears (MLG) installed on McDonnell Douglas Model DC–8 series airplanes has failed. The swivel pin lug failures have been attributed, in part, to overload due to insufficient lubrication of the swivel pin lugs, which can be prevented by proper and timely maintenance practices. The swivel pin lug failures also have been attributed, in part, to cracks resulting from stress corrosion. This stress corrosion usually occurs after approximately 10,000 hours time-in-service. These conditions, if not detected and corrected in a timely manner, could result in collapse/failure of the MLG during landing.

The FAA has reviewed and approved McDonnell Douglas DC–8 Service Bulletin 32–182, dated January 20, 1995; and McDonnell Douglas Service Bulletin DC8–32–182, Revision 1, dated July 21, 1995, and Revision 2, dated August 30, 1995, which describe procedures for a magnetic particle inspection to detect cracking of the swivel bogie beam lugs. For airplanes on which no cracking is found, these service bulletins also describe procedures for a visual inspection to detect corrosion of the swivel pin lug surfaces and bores, and modification of the forward bogie beam. This modification involves removing corrosion and sulfamate nickel or electroless nickel plating of the swivel pin lugs of the forward bogie beam. Accomplishment of this modification will minimize the possibility of failure or collapse of the landing gear due to stress corrosion cracking.

Since an unsafe condition has been identified that is likely to exist or develop on other products of this same type design, the proposed AD would require a magnetic particle inspection to detect cracking of the swivel bogie beam lugs, and repair, if necessary. For airplanes on which no cracking is found during the magnetic particle inspection, the proposed AD also would require a visual inspection to detect corrosion of the swivel pin lug surfaces and bores, and modification of the forward bogie beams.

Repair of any cracking detected during the magnetic particle inspection would be required to be accomplished in accordance with a method approved by the FAA. The other proposed actions (inspections and modification) would be required to be accomplished in accordance with the service bulletins described previously.

There are approximately 148 Model DC–8 series airplanes of the affected design in the worldwide fleet. The FAA estimates that 97 airplanes of U.S. registry would be affected by this proposed AD, that it would take approximately 83 work hours per airplane to accomplish the proposed actions, and that the average labor rate is $60 per work hour. Based on these figures, the total cost impact of the proposed AD on U.S. operators is estimated to be $483,060, or $4,980 per airplane.

The total cost impact figure discussed above is based on assumptions that no operator has yet accomplished any of the proposed requirements of this AD action, and that no operator would accomplish those actions in the future if this AD were not adopted.

The regulations proposed herein would not have substantial direct effects on the States, on the relationship between the national government and the States, or on the distribution of power and responsibilities among the various levels of government. Therefore, in accordance with Executive Order 12612, it is determined that this proposal would not have sufficient federalism implications to warrant the preparation of a Federalism Assessment.

For the reasons discussed above, I certify that this proposed regulation (1) is not a ''significant regulatory action'' under Executive Order 12866; (2) is not a ''significant rule'' under the DOT Regulatory Policies and Procedures (44 FR 11034, February 26, 1979); and (3) if promulgated, will not have a significant economic impact, positive or negative, on a substantial number of small entities under the criteria of the Regulatory Flexibility Act. A copy of the draft regulatory evaluation prepared for this action is contained in the Rules Docket. A copy of it may be obtained by contacting the Rules Docket at the location provided under the caption **ADDRESSES.**

List of Subjects in 14 CFR Part 39

Air transportation, Aircraft, Aviation safety, Safety.

The Proposed Amendment

Accordingly, pursuant to the authority delegated to me by the Administrator, the Federal Aviation Administration proposes to amend part 39 of the Federal Aviation Regulations (14 CFR part 39) as follows:

PART 39—AIRWORTHINESS DIRECTIVES

1. The authority citation for part 39 continues to read as follows:

Authority: 49 U.S.C. 106(g), 40101, 40113, 44701.

§ 39.13 [Amended]

2. Section 39.13 is amended by adding the following new airworthiness directive:

McDonnell Douglas: Docket 95–NM–115–AD.

Applicability: Model DC–8 series airplanes equipped with main landing gears having

swivel type bogie beams on which the swivel pin lugs have not been nickel plated, certificated in any category.

Note 1: This AD applies to each airplane identified in the preceding applicability provision, regardless of whether it has been modified, altered, or repaired in the area subject to the requirements of this AD. For airplanes that have been modified, altered, or repaired so that the performance of the requirements of this AD is affected, the owner/operator must use the authority provided in paragraph (e) of this AD to request approval from the FAA. This approval may address either no action, if the current configuration eliminates the unsafe condition; or different actions necessary to address the unsafe condition described in this AD. Such a request should include an assessment of the effect of the changed configuration on the unsafe condition addressed by this AD. In no case does the presence of any modification, alteration, or repair remove any airplane from the applicability of this AD.

Compliance: Required as indicated, unless accomplished previously.

To prevent failure of the swivel-type bogie beam of the main landing gear (MLG) due to stress corrosion, which could result in a collapse of the MLG during landing, accomplish the following:

(a) Perform a magnetic particle inspection to detect cracking of the swivel bogie beam lugs, in accordance with McDonnell Douglas DC–8 Service Bulletin 32–182, dated January 20, 1995, McDonnell Douglas Service Bulletin DC8–32–182, Revision 1, dated July 21, 1995, or Revision 02, dated August 30, 1995, at the later of the times specified in paragraphs (a)(1) and (a)(2) of this AD.

(1) Prior to the accumulation of 11,600 total flight hours, or within 10 years since the installation of the forward bogie beam of the MLG, whichever occurs first.

(2) Prior to the accumulation of 2,000 flight hours, or 2 years after the effective date of this AD, whichever occurs first.

(b) If no cracking is detected during the inspection required by paragraph (a) of this AD, prior to further flight, perform a visual inspection to detect corrosion in the swivel pin lug surfaces and bores, in accordance with McDonnell Douglas DC–8 Service Bulletin 32–182, dated January 20, 1995; McDonnell Douglas Service Bulletin DC8–32–182, Revision 1, dated July 21, 1995; or Revision 02, dated August 30, 1995.

Note 2: Particular attention should be paid to the lubrication of the swivel pin lug and the lower swivel pin bushing during regular normal maintenance.

(1) If no corrosion is detected, prior to further flight, accomplish paragraph (b)(1)(i), (b)(1)(ii), (b)(1)(iii), or (b)(1)(iv) of this AD, as applicable, in accordance with the service bulletin.

(i) For Group I airplanes on which the forward bogie beam has not been modified previously: Modify the forward bogie beam in accordance with the actions specified (for Group I airplanes) as Condition 1 of the Accomplishment Instructions of the service bulletin.

(ii) For Group I airplanes on which the forward bogie beam has been modified previously: Modify the forward bogie beam in accordance with the actions specified (for Group I airplanes) as Condition 2 of the Accomplishment Instructions of the service bulletin.

(iii) For Group II airplanes on which the forward bogie beam has not been modified previously: Modify the forward bogie beam in accordance with the actions specified (for Group II airplanes) as Condition 1 of the Accomplishment Instructions of the service bulletin.

(iv) For Group II airplanes on which the forward bogie beam has been modified previously: Modify the forward bogie beam in accordance with the actions specified (for Group II airplanes) as Condition 2 of the Accomplishment Instructions of the service bulletin.

(2) If any corrosion is detected, prior to further flight, accomplish paragraph (b)(2)(i), (b)(2)(ii), (b)(2)(iii), or (b)(2)(iv), as applicable, in accordance with the service bulletin.

(i) For Group I airplanes on which the forward bogie beam has not been modified previously: Modify the forward bogie beam in accordance with the actions specified (for Group I airplanes) as Condition 1 of the Accomplishment Instructions of the service bulletin.

(ii) For Group I airplanes on which the forward bogie beam has been modified previously: Modify the forward bogie beam in accordance with the actions specified (for Group I airplanes) as Condition 2 of the Accomplishment Instructions of the service bulletin.

(iii) For Group II airplanes on which the forward bogie beam has not been modified previously: Modify the forward bogie beam in accordance with the actions specified (for Group II airplanes) as Condition 1 of the Accomplishment Instructions of the service bulletin. If the minimum thickness of the reworked swivel pin lug exceeds the dimensions specified in Table I of the service bulletin, prior to further flight, repair in accordance with a method approved by the Manager, Los Angeles Aircraft Certification Office (ACO), FAA, Transport Airplane Directorate.

(iv) For Group II airplanes on which the forward bogie beam has been modified previously: Modify the forward bogie beam in accordance with the actions specified (for Group II airplanes) as Condition 2 of the Accomplishment Instructions of the service bulletin. If the minimum thickness of the reworked swivel pin lug exceeds the dimensions specified in Table I of the service bulletin, prior to further flight, repair in accordance with a method approved by the Manager, Los Angeles ACO.

(c) If any cracking is detected during the inspection required by paragraph (a) of this AD, prior to further flight, repair in accordance with a method approved by the Manager, Los Angeles ACO.

(d) As of the effective date of this AD, no forward bogie beam swivel pin lug shall be installed on any airplane, unless that swivel pin lug has been modified in accordance with McDonnell Douglas DC–8 Service Bulletin 32–182, dated January 20, 1995; McDonnell Douglas Service Bulletin DC8–32–182, Revision 1, dated July 21, 1995; or Revision 02, dated August 30, 1995.

(e) An alternative method of compliance or adjustment of the compliance time that provides an acceptable level of safety may be used if approved by the Manager, Los Angeles ACO. Operators shall submit their requests through an appropriate FAA Principal Maintenance Inspector, who may add comments and then send it to the Manager, Los Angeles ACO.

Note 3: Information concerning the existence of approved alternative methods of compliance with this AD, if any, may be obtained from the Los Angeles ACO.

(f) Special flight permits may be issued in accordance with sections 21.197 and 21.199 of the Federal Aviation Regulations (14 CFR 21.197 and 21.199) to operate the airplane to a location where the requirements of this AD can be accomplished.

Issued in Renton, Washington, on October 26, 1995.

Darrell M. Pederson,

Acting Manager, Transport Airplane Directorate, Aircraft Certification Service.

[FR Doc. 95–27076 Filed 10–31–95; 8:45 am]

BILLING CODE 4910–13–U

---

14 CFR Part 71

[Airspace Docket No. 95–AWA–7]

Proposed Modification of the Offutt AFB, Class C Airspace Area; Nebraska

AGENCY: Federal Aviation Administration (FAA), DOT.

ACTION: Notice of proposed rulemaking.

SUMMARY: This proposed rule would modify the Class C airspace area at Offutt Air Force Base (AFB), NE. This proposal would delete the 1-mile airspace exclusion around the South Omaha Airport, due to its closure, and return this airspace to the surface area of the Class C airspace. In addition, this proposed rule would reduce controller workload.

DATES: Comments must be received on or before December 15, 1995.

ADDRESSES: Send comments on the proposal in triplicate to: Federal Aviation Administration, Office of the Chief Counsel, Attention: Rules Docket [AGC–200], Airspace Docket No. 95–AWA–7, 800 Independence Avenue, SW., Washington, DC 20591.

The official docket may be examined in the Rules Docket, Office of the Chief Counsel, Room 916, weekdays, except Federal holidays, between 8:30 a.m. and 5:00 p.m.

An informal docket may also be examined during normal business hours at the office of the Regional Air Traffic Division.

FOR FURTHER INFORMATION CONTACT: William C. Nelson, Airspace and

Obstruction Evaluation Branch (ATP–240), Airspace-Rules and Aeronautical Information Division, Air Traffic Rules and Procedures Service, Federal Aviation Administration, 800 Independence Avenue, SW., Washington, DC 20591; telephone: (202) 267–9295.

SUPPLEMENTARY INFORMATION:

Comments Invited

Interested parties are invited to participate in this proposed rulemaking by submitting such written data, views, or arguments as they may desire. Comments that provide the factual basis supporting the views and suggestions presented are particularly helpful in developing reasoned regulatory decisions on the proposal. Comments are specifically invited on the overall regulatory, aeronautical, economic, environmental, and energy-related aspects of the proposal. Communications should identify the airspace docket number and be submitted in triplicate to the address listed above. Commenters wishing the FAA to acknowledge receipt of their comments on this notice must submit with those comments a self-addressed, stamped postcard on which the following statement is made: ''Comments to Airspace Docket No. 95–AWA–7.'' The postcard will be date/time stamped and returned to the commenter. All communications received on or before the specified closing date for comments will be considered before taking action on the proposed rule. The proposal contained in this notice may be changed in light of comments received. All comments submitted will be available for examination in the Rules Docket both before and after the closing date for comments. A report summarizing each substantive public contact with FAA personnel concerned with this rulemaking will be filed in the docket.

Availability of NPRM's

Any person may obtain a copy of this Notice of Proposed Rulemaking (NPRM) by submitting a request to the Federal Aviation Administration, Office of Public Affairs, Attention: Public Inquiry Center, APA–220, 800 Independence Avenue, SW., Washington, DC 20591, or by calling (202) 267–3485. Communications must identify the notice number of this NPRM. Persons interested in being placed on a mailing list for future NPRM's should also request a copy of Advisory Circular No. 11–2A, which describes the application procedure.

The Proposal

The FAA is considering an amendment to part 71 of the Federal Aviation Regulations (14 CFR part 71) to modify the Class C airspace area at Offutt AFB, NE. The proposed modification would eliminate the 1-mile airspace exclusion around South Omaha Airport due to its closure. The intended effect of this proposal is to return this airspace to the surface area of the established Class C airspace area. Additionally, this proposed rule would reduce controller workload. The coordinates for this airspace docket are based upon North American Datum 83. Class C airspace designations are published in paragraph 4000 of FAA Order 7400.9C dated August 17, 1995, and effective September 16, 1995, which is incorporated by reference in 14 CFR 71.1. The Class C airspace designation listed in this document would be subsequently published in the Order.

Regulatory Evaluation Summary

Proposed changes to Federal regulations must undergo several economic analyses. First, Executive Order 12866 directs that each Federal agency shall propose or adopt a regulation only upon a reasoned determination that the benefits of the intended regulation justify its costs. Second, the Regulatory Flexibility Act of 1980 requires agencies to analyze the economic effect of regulatory changes on small entities. Third, the Office of Management and Budget directs agencies to assess the effect of regulatory changes on international trade. In conducting these analyses, the FAA has determined that this Notice of Proposed Rulemaking (NPRM) is not ''a significant regulatory action'' as defined in the Executive Order and the Department of Transportation Regulatory Policies and Procedures.

This NPRM would modify the Class C airspace area at Offutt AFB, NE. This proposal would delete the 1-mile airspace exclusion around South Omaha Airport and standardize air traffic operations.

Costs

The FAA has determined that the implementation of the NPRM to modify the Class C airspace area at Offutt AFB, NE, would result in little or no cost to either the agency or aircraft operators. The elimination of the 1-mile airspace exclusion around the South Omaha Airport would not reduce aviation safety nor increase the risk of a midair collision because that airport is closed. Also, the revision to aeronautical charts to reflect the airspace modification would be part of the routine and periodic updating of charts. Finally, the FAA would not incur any additional administrative costs for either personnel or equipment.

Benefits

The NPRM would generate benefits for system users and the FAA primarily in the form of enhanced operational efficiency. The NPRM would provide additional controlled airspace for aircraft landing at and departing from Offutt AFB, NE. Air traffic controllers would gain operational efficiency as they would be able to standardize air traffic operations.

Initial Regulatory Flexibility Determination

The Regulatory Flexibility Act of 1980 (RFA) was enacted by Congress to ensure that small entities are not unnecessarily and disproportionately burdened by Federal regulations. The RFA requires a Regulatory Flexibility Analysis if an NPRM would have ''a significant economic impact on a substantial number of small entities.'' FAA Order 2100.14A outlines the FAA's procedures and criteria for implementing the RFA. Small entities are independently owned and operated small businesses and small not-for-profit organizations. A substantial number of small entities is defined as a number that is 11 or more and which is more than one-third of the small entities subject to this NPRM.

The FAA determined that revising the Class C airspace area at Offutt AFB would not result in a significant economic impact on a substantial number of small entities. This determination was made because there are little or no costs associated with this NPRM.

International Trade Impact Assessment

This NPRM would not constitute a barrier to international trade, including the export of U.S. goods and services to foreign countries and the import of foreign goods and services into the United States. This NPRM would not impose costs on aircraft operators or aircraft manufacturers in the United States or foreign countries. The modification of Class C airspace would only affect U.S. terminal airspace operating procedures at and in the vicinity of Offutt AFB, NE. This NPRM would not have international trade ramifications because it is a domestic airspace matter that would not impose additional costs or requirements on affected entities.

List of Subjects in 14 CFR Part 71

Airspace, Incorporation by reference, Navigation (air).

The Proposed Amendment

In consideration of the foregoing, the Federal Aviation Administration proposes to amend 14 CFR part 71 as follows:

PART 71—[AMENDED]

1. The authority citation for part 71 continues to read as follows:

Authority: 49 U.S.C. 106(g), 40103, 40113, 40120; E.O. 10854, 24 FR 9565, 3 CFR, 1959–1963 Comp., p. 389; 14 CFR 11.69.

§ 71.1 [Amended]

2. The incorporation by reference in 14 CFR 71.1 of the Federal Aviation Administration Order 7400.9C, Airspace Designations and Reporting Points, dated August 17, 1995, and effective September 16, 1995, is amended as follows:

Paragraph 4000—Subpart C-Class C Airspace

* * * * *

ACE NE C Offutt AFB, NE [Revised]

Offutt AFB, NE

(Lat. 41°07′06″N, long. 95°54′45″W.)

That airspace extending upward from the surface to and including 5,000 feet MSL within a 5-mile radius of Offutt AFB, and that airspace extending upward from 2,500 feet MSL to and including 5,000 feet MSL within a 10-mile radius of the Offutt AFB excluding that airspace designated as the Eppley Airfield, Omaha, NE, Class C airspace area.

* * * * *

Issued in Washington, DC, on October 25, 1995.

Nancy B. Kalinowski,

Acting Manager, Airspace-Rules and Aeronautical Information Division.

BILLING CODE 4910–13–U

OFFUTT AFB, NEBRASKA
CLASS C AIRSPACE AREA

(Not to be used for navigation)

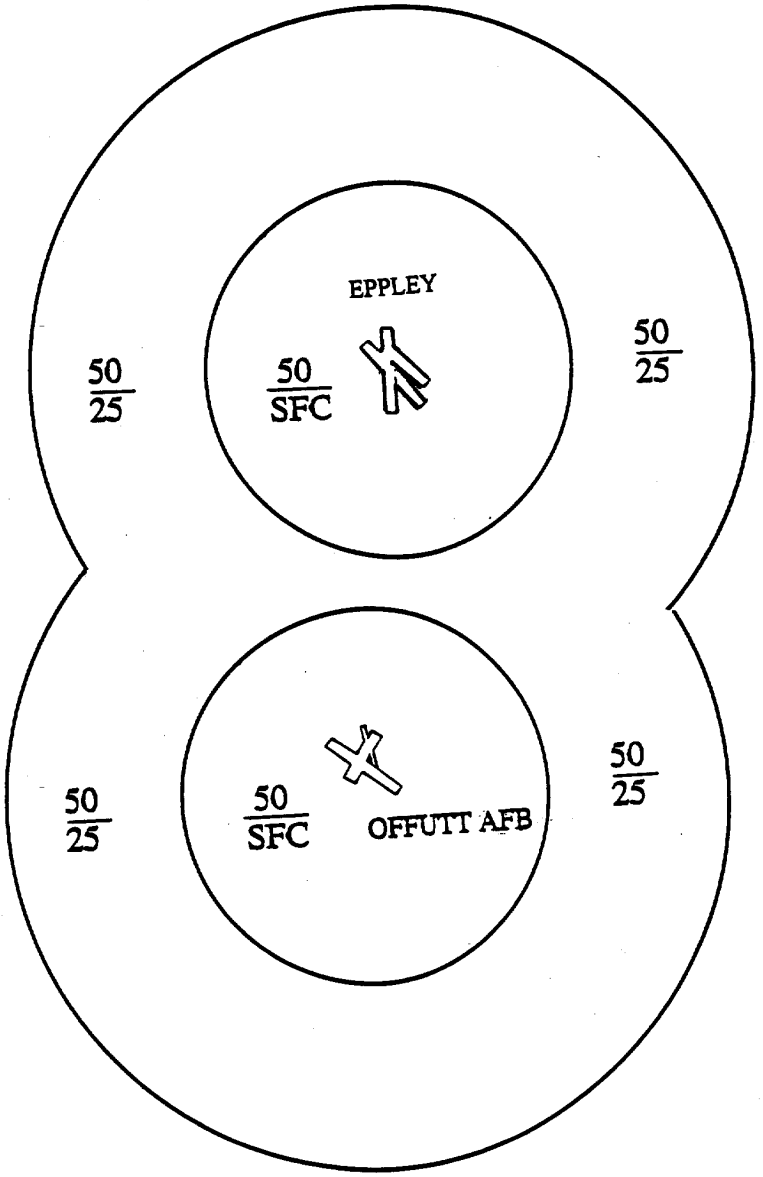

Prepared by the
FEDERAL AVIATION ADMINISTRATION
Publications Branch
ATP-210

[FR Doc. 95–26994 Filed 10–31–95; 8:45 am]
BILLING CODE 4910–13–C

14 CFR Part 71

[Airspace Docket No. 94–AWP–35]

Proposed Amendment of Class E Airspace; Globe, AZ

AGENCY: Federal Aviation Administration (FAA), DOT.

ACTION: Notice of proposed rulemaking.

SUMMARY: This notice proposes to amend the Class E airspace area at Globe, AZ. The development of a Global Positioning System (GPS) Standard Instrument Approach Procedure (SIAP) to Runway (RWY) 27 has made this proposal necessary. The intended effect of this proposal is to provide adequate controlled airspace for Instrument Flight Rules (IFR) operations at the Globe-San Carlos Regional Air Facility Airport, Globe, AZ.

DATES: Comments must be received on or before December 11, 1995.

ADDRESSES: Send comments on the proposal in triplicate to: Federal Aviation Administration, Attn: Manager, System Management Branch, AWP–530, Docket No. 95–AWP–35, Air Traffic Division, P.O. Box 92007, Worldway Postal Center, Los Angeles, California 90009.

The official docket may be examined in the Office of the Assistant Chief Counsel, Western Pacific Region, Federal Aviation Administration, Room 6007, 15000 Aviation Boulevard, Lawndale, California 90261.

An informal docket may also be examined during normal business at the Office of the Manager, System Management Branch, Air Traffic Division at the above address.

FOR FURTHER INFORMATION CONTACT: Scott Speer, Airspace Specialist, System Management Branch, AWP–530, Air Traffic Division, Western-Pacific Region, Federal Aviation Administration, 15000 Aviation Boulevard, Lawndale, California 90261, telephone (310) 725–6533.

SUPPLEMENTARY INFORMATION:

Comments Invited

Interested parties are invited to participate in this proposed rulemaking by submitting such written data, views, or arguments as they may desire. Comments that provide the factual basis supporting the views and suggestions presented are particularly helpful in developing reasoned regulatory decisions on the proposal. Comments are specifically invited on the overall regulatory, aeronautical, economic, environmental, and energy-related aspects of the proposal. Communications should identify the airspace docket number and be submitted in triplicate to the address listed above. Commenters wishing the FAA to acknowledge receipt of their comments on this notice must submit with the comments a self-addressed, stamped postcard on which the following statement is made: ''Comments to Airspace Docket No. 95–AWP–35.'' The postcard will be date/time stamped and returned to the commenter. All communications received on or before the specified closing date for comments will be considered before taking action on the proposed rule. The proposal contained in this notice may be changed in light of comments received. All comments submitted will be available for examination in the System Management Branch, Air Traffic Division, at 15000 Aviation Boulevard, Lawndale, California 90261, both before and after the closing date for comments. A report summarizing each substantive public contact with FAA personnel concerned with this rulemaking will be filed in the docket.

Availability of NPRM

Any person may obtain a copy of this Notice of Proposed Rulemaking (NPRM) by submitting a request to the Federal Aviation Administration, System Management Branch, P.O. Box 92007, Worldway Postal Center, Los Angeles, California 90009. Communications must identify the notice number of this NPRM. Persons interested in being placed on a mailing list for future NPRM's should also request a copy of Advisory Circular No. 11–2A, which describes the application procedures.

The Proposal

The FAA is considering an amendment to part 71 of the Federal Aviation Regulations (14 CFR part 71) to amend the Class E airspace area at Globe, AZ. The development of a GPS SIAP at the Globe-San Carlos Regional Air Facility Airport has made this proposal necessary. The intended effect of this proposal is to provide adequate Class E airspace for aircraft executing the GPS RWY 27 SIAP at the Globe-San Carlos Regional Air Facility Airport, Globe, AZ. Class E airspace designations for airspace areas extending upward from 700 feet or more above the surface of the earth are published in Paragraph 6005 of FAA Order 7400.9C dated August 17, 1995, and effective September 16, 1995, which is incorporated by reference in 14 CFR 71.1. The Class E airspace designation listed in this document would be published subsequently in this Order.

The FAA has determined that this proposed regulation only involves an established body of technical regulations for which frequent and routine amendments are necessary to keep them operationally current. Therefore, this proposed regulation—(1) is not a ''significant regulatory action'' under Executive Order 12866; (2) is not a ''significant rule'' under DOT Regulatory Policies and Procedures (44 FR 10034; February 26, 1979); and (3) does not warrant preparation of a Regulatory Evaluation as the anticipated impact is so minimal. Since this is a routine matter that will only affect air traffic procedures and air navigation, it is certified that this proposed rule would not have a significant economic impact on a substantial number of small entities under the criteria of the Regulatory Flexibility Act.

List of Subjects in 14 CFR Part 71

Airspace, Incorporation by reference, Navigation (air).

The Proposed Amendment

In consideration of the foregoing, the Federal Aviation Administration proposes to amend 14 CFR part 71 as follows:

PART 71—[AMENDED]

1. The authority citation for 14 CFR part 71 is revised to read as follows:

Authority: 49 U.S.C. 106(g), 40103, 40113, 40120; E.O. 10854, 24 FR 9565, 3 CFR, 1959–1963 Comp., p. 389; 14 CFR 11.69.

§ 71.1 [Amended]

2. The incorporation by reference in 14 CFR 71.1 of the Federal Aviation Administration Order 7400.9C, Airspace Designations and Reporting Points, dated August 17, 1995, and effective September 16, 1995, is amended as follows:

Paragraph 6005 Class E Airspace Areas Extending Upward From 700 Feet or More Above the Surface of the Earth.

* * * * *

AWP AZ E5 Globe, AZ [Revised]

Globe-San Carlos Regional Air Facility Airport, AZ
(Lat. 33°21′10″N, long. 110°39′51″W)

That airspace extending upward from 700 feet above the surface within a 5-mile radius of the Globe-San Carlos Regional Air Facility Airport. That airspace extending upward from 1,200 feet above the surface bounded by a line beginning at lat. 33°26′00″N, long. 110°36′00″W; to lat. 33°24′00″N, long. 110°09′00″W; to lat. 33°09′00″N, long. 110°09′00″W; to lat. 33°12′00″N, long. 110°36′00″W; thence to the point of beginning.

* * * * *

Issued in Los Angeles, California, on October 19, 1995.

Richard R. Lien,

Manager, Air Traffic Division, Western-Pacific Region.

[FR Doc. 95–26992 Filed 10–31–95; 8:45 am]

BILLING CODE 4910–13–M

---

14 CFR Part 71

[Airspace Docket No. 95–AWP–31]

Proposed Amendment of Class E Airspace; Flagstaff, AZ

AGENCY: Federal Aviation Administration (FAA), DOT.

ACTION: Notice of proposed rulemaking.

SUMMARY: This notice proposes to amend the Class E airspace area at Flagstaff, AZ. The development of a Global Positioning System (GPS) Standard Instrument Approach Procedure (SIAP) to Runway (RWY) 21 has made this proposal necessary. The intended effect of this proposal is to provide adequate controlled airspace for Instrument Flight Rules (IFR) operations at Flagstaff Pulliam Airport, Flagstaff, AZ.

DATES: Comments must be received on or before December 8, 1995.

ADDRESSES: Send comments on the proposal in triplicate to: Federal Aviation Administration, Attn: Manager, System Management Branch, AWP–530, Docket No. 95–AWP–31, Air Traffic Division, P.O. Box 92007, Worldway Postal Center, Los Angeles, California 90009.

The official docket may be examined in the Office of the Assistant Chief Counsel, Western Pacific Region, Federal Aviation Administration, Room 6007, 15000 Aviation Boulevard, Lawndale, California, 90261.

An informal docket may also be examined during normal business at the Office of the Manager, System Management Branch, Air Traffic Division at the above address.

FOR FURTHER INFORMATION CONTACT: Scott Speer, Airspace Specialist, System Management Branch, AWP–530, Air Traffic Division, Western-Pacific Region, Federal Aviation Administration, 15000 Aviation Boulevard, Lawndale, California 90261, telephone (310) 725–6533.

SUPPLEMENTARY INFORMATION:

Comments Invited

Interested parties are invited to participate in this proposed rulemaking by submitting such written data, views, or arguments as they may desire. Comments that provide the factual basis supporting the views and suggestions presented are particularly helpful in developing reasoned regulatory decisions on the proposal. Comments are specifically invited on the overall regulatory, aeronautical, economic, environmental, and energy-related aspects of the proposal. Communications should identify the airspace docket number and be submitted in triplicate to the address listed above. Commenters wishing the FAA to acknowledge receipt of their comments on this notice must submit with the comments a self-addressed, stamped postcard on which the following statement is made: ''Comments to Airspace Docket No. 95–AWP–31.'' The postcard will be date/time stamped and returned to the commenter. All communications received on or before the specified closing date for comments will be considered before taking action on the proposed rule. The proposal contained in this notice may be changed in light of comments received. All comments submitted will be available for examination in the System Management Branch, Air Traffic Division, at 15000 Aviation Boulevard, Lawndale, California 90261, both before and after the closing date for comments. A report summarizing each substantive public contact with FAA personnel concerned with this rulemaking will be filed in the docket.

Availability of NPRM

Any person may obtain a copy of this Notice of Proposed Rulemaking (NPRM) by submitting a request to the Federal Aviation Administration, System Management Branch, P.O. Box 92007, Worldway Postal Center, Los Angeles, California 90009. Communications must identify the notice number of this NPRM. Persons interested in being placed on a mailing list for future NPRM's should also request a copy of Advisory Circular No. 11–2A, which describes the application procedures.

The Proposal

The FAA is considering an amendment to part 71 of the Federal Aviation Regulations (14 CFR part 71) to amend the Class E airspace area at Flagstaff, AZ. The development of a GPS SIAP at Flagstaff Pulliam Airport has made this proposal necessary. The intended effect of this proposal is to provide adequate Class E airspace for aircraft executing the GPS RWY 21 SIAP at Flagstaff Pulliam Airport, Flagstaff, AZ. Class E airspace designations for airspace areas extending upward from 700 feet or more above the surface of the earth are published in Paragraph 6005 of FAA Order 7400.9C dated August 17, 1995, and effective September 16, 1995, which is incorporated by reference in 14 CFR 71.1. The Class E airspace designation listed in this document would be published subsequently in this Order.

The FAA has determined that this proposed regulation only involves an established body of technical regulations for which frequent and routine amendments are necessary to keep them operationally current. Therefore, this proposed regulation—(1) is not a ''significant regulatory action'' under Executive Order 12866; (2) is not a ''significant rule'' under DOT Regulatory Policies and Procedures (44 FR 10034; February 26, 1979); and (3) does not warrant preparation of a Regulatory Evaluation as the anticipated impact is so minimal. Since this is a routine matter that will only affect air traffic procedures and air navigation, it is certified that this proposed rule would not have a significant economic impact on a substantial number of small entities under the criteria of the Regulatory Flexibility Act.

List of Subjects in 14 CFR Part 71

Airspace, Incorporation by reference, Navigation (air).

The Proposed Amendment

In consideration of the foregoing, the Federal Aviation Administration proposes to amend 14 CFR part 71 as follows:

PART 71—[AMENDED]

1. The authority citation for 14 CFR part 71 is revised to read as follows:

Authority: 49 U.S.C. 106(g), 40103, 40113, 40120; E.O. 10854, 24 FR 9565, 3 CFR, 1959–1963 Comp., p. 389; 14 CFR 11.69.

§ 71.1 [Amended]

2. The incorporation by reference in 14 CFR 71.1 of the Federal Aviation Administration Order 7400.9C, Airspace Designations and Reporting Points, dated August 17, 1995, and effective September 16, 1995, is amended as follows:

Paragraph 6005 Class E Airspace Areas Extending Upward From 700 Feet or More Above the Surface of the Earth.

* * * * *

AWP AZ E5 Flagstaff, AZ [Revised]

Flagstaff Pulliam Airport, AZ
(Lat. 35°08′18″N, long. 111°40′17″W)
Flagstaff VOR/DME
(Lat. 35°08′50″N, long. 111°40′27″W)

That airspace extending upward from 700 feet above the surface within a 3.6-mile radius of the Flagstaff Pulliam Airport; and within a 10-mile radius of Flagstaff VOR

beginning at a line 1.8 miles northeast of and parallel to the Flagstaff VOR 043° radial extending clockwise to a line 1.8 miles west of and parallel to the Flagstaff VOR 198° radial. That airspace extending upward from 1,200 feet above the surface within 8.3 miles each side of the Flagstaff VOR 127° and 307° radials, extending from 7 miles northwest to 16.5 miles southeast of the Flagstaff VOR and that airspace bounded by a line beginning at lat. 35°13′32″N, long. 111°04′31″W; to lat. 35°17′17″N, long. 111°02′35″W; to lat. 35°22′00″N, long. 111°16′43″W; to lat. 35°24′00″N, long. 111°26′16″W; to lat. 35°18′00″N, long. 111°35′33″W; thence clockwise via a 10-mile radius of the Flagstaff VOR to lat. 35°16′34″N, long. 111°32′42″W; to lat. 35°19′58″N, long. 111°24′10″W, thence to the point of beginning and that airspace bounded by a line beginning at lat. 35°03′00″N, long. 111°21′00″W; to lat. 35°02′00″N, long. 111°15′00″W; to lat. 35°01′00″N, long. 111°22′00″W, thence to the point of beginning

* * * * *

Issued in Los Angeles, California, on October 19, 1995.

Richard R. Lien,

Manager, Air Traffic Division, Western-Pacific Region.

[FR Doc. 95–26991 Filed 10–31–95; 8:45 am]

BILLING CODE 4910–13–M

DEPARTMENT OF ENERGY

Federal Energy Regulatory Commission

18 CFR Part 284

[Docket No. RM96–1–000]

Standards For Business Practices Of Interstate Natural Gas Pipelines

Issued: October 25, 1995.

AGENCY: Federal Energy Regulatory Commission, DOE.

ACTION: Advance Notice Of Proposed Rulemaking.

SUMMARY: The Federal Energy Regulatory Commission is issuing a notice requesting comments containing detailed proposals for standardizing ten high priority business practices of interstate natural gas pipelines. In addition, comments are solicited on whether the Commission should standardize other business practices to better integrate the pipeline grid.

DATES: Comments are due by March 15, 1996. Comments should be filed with the Office of the Secretary and should refer to Docket No. RM96–1–000.

ADDRESSES: Federal Energy Regulatory Commission, 888 First Street, N.E., Washington, DC 20426.

FOR FURTHER INFORMATION CONTACT:
Michael Goldenberg, Office of the General Counsel, Federal Energy Regulatory Commission, 825 North Capitol Street, NE, Washington, DC 20426, (202) 208–2294.
Marvin Rosenberg, Office of Economic Policy, Federal Energy Regulatory Commission, 825 North Capitol Street, N.E., Washington, D.C. 20426, (202) 208–1283.
Brooks Carter, Federal Energy Regulatory Commission, 888 First Street, N.E., Washington, D.C. 20426, (202) 501–8145.

SUPPLEMENTARY INFORMATION: In addition to publishing the full text of this document in the Federal Register, the Commission also provides all interested persons an opportunity to inspect or copy the contents of this document during normal business hours at 888 First Street, N.E., Washington, D.C. 20426.

The Commission Issuance Posting System (CIPS), an electronic bulletin board service, provides access to the texts of formal documents issued by the Commission. CIPS is available at no charge to the user and may be accessed using a personal computer with a modem by dialing (202) 208–1397. To access CIPS, set your communications software to use 19200, 14400, 12000, 9600, 7200, 4800, 2400, or 1200 bps, full duplex, no parity, 8 data bits, and 1 stop bit. The full text of this document will be available on CIPS in ASCII and WordPerfect 5.1 format. The complete text on diskette in WordPerfect format may also be purchased from the Commission's copy contractor, La Dorn Systems Corporation, also located at 888 First Street, N.E., Washington, D.C. 20426.

Advance Notice of Proposed Rulemaking

The Federal Energy Regulatory Commission (Commission) requests the submission of comments, by March 15, 1996, containing detailed proposals that will enable the Commission to adopt by regulation certain standards for business practices and procedures involving transactions between interstate natural gas pipelines and their customers.

Background

In Order No. 563,[1] the Commission began the process of standardizing electronic communication in the natural gas industry by developing standards for capacity release transactions. The capacity release standards were developed by industry working groups composed of representatives from all segments of the natural gas industry. During the process of developing the capacity release standards, a Working Group was established to begin the process of standardizing other business transactions. The Working Group identified ten high priority data elements for standardization. They are, in the order of priority assigned by the Working Group: nominations, confirmations, allocated gas flows, customer and contract imbalances, gas flow at metered points, transportation invoices, pre-determined allocation methodologies, gas payment remittance statements, gas sales invoices, and uploads of capacity release prearranged deals.

Approximately one-and-a-half years ago, the Working Group recommended against the Commission promulgating standards in this area because it thought substantial progress could be made in developing and implementing standards on a voluntary basis. The Working Group, for example, anticipated significant implementation of the nomination and confirmation standards by September 1, 1995.

The Commission accepted the consensus agreement of the Working Group and did not institute a process leading to the mandated implementation of business practice standards. The Commission, however, recognized the importance of such standards in facilitating gas movement across the pipeline grid.[2] Depending on the progress made by the industry, the Commission committed itself to reevaluate whether it needed to become more involved in mandating the development and implementation of the standards.[3]

On September 21, 1995, the Commission held a conference in Docket No. RM93–4–000 to evaluate the progress being made towards standardization. Almost all the commenters at the conference conceded that the industry has not achieved the anticipated progress. For example, although the industry, through the Gas Industry Standards Board (GISB)[4] has

[1] Standards For Electronic Bulletin Boards Required Under Part 284 of the Commission's Regulations, Order No. 563, 59 FR 516 (Jan. 5, 1994), III FERC Stats. & Regs. Preambles ¶ 30,988 (Dec. 23, 1993), *order on reh'g,* Order No. 563–A, 59 FR 23624 (May 6, 1994), III FERC Stats. & Regs. Preambles ¶ 30,994 (May 2, 1994), *reh'g denied,* Order No. 563–B, 68 FERC ¶ 61,002 (1994).

[2] Order No. 563–A, III FERC Stats. & Regs. Preambles, at 31,050.

[3] *Id.*

[4] GISB is a private standards development organization that has succeeded the industry Working Group as the primary vehicle for developing communication standards. On October 23, 1995, the GISB board voted to expand GISB's scope, subject to ratification by GISB's membership, to include ''business practices that streamline the transactional processes of the gas industry.'' As many of the participants at the September 21, 1995 conference discussed, this development was

promulgated a set of standards governing the electronic communication of nomination and confirmation information, the standards are not being widely used.

Many participants at the September 21, 1995 conference maintained the standards do not go far enough to provide for efficient means of communication. The promulgated standards deal only with the electronic means of communicating the often idiosyncratic nomination and confirmation information for each pipeline. The standards do nothing to standardize the underlying information that is to be transmitted. As one participant pointed out, the 18 largest pipelines use 14 different nomenclatures to describe a pipeline receipt point and there is not even agreement on whether to accept nominations using Mcf or MMBtu to measure volumes. Without standardization of the nomination and confirmation information itself, many participants argued the industry would not achieve the business efficiencies which lie at the heart of any standardization effort.

On October 18, 1995, the Interstate Natural Gas Association of America (INGAA) filed a letter with the Commission outlining a proposed process through which it, together with GISB and the rest of the industry, could reduce the variations in pipeline business practices to achieve an integrated pipeline grid. The INGAA proposal would standardize the data elements, nomenclature, and business procedures relating to the ten high priority data requirements identified by the Working Group. In addition, consideration would be given to other standards needed to coordinate pipeline business practices to promote gas flow across an integrated pipeline network, such as standardization of nomination deadlines, the start of the gas day, the nomination period, and capacity release procedures.[5] INGAA proposes a schedule for development of standards that concludes with tariff filings that begin in October 1996.

Process For Standardizing Critical Business Practices

As a result of restructuring, the gas industry is becoming a national marketplace. In order to establish a more efficient and seamless pipeline grid, where buyers can easily and efficiently obtain and transport gas from all potential sources of supply, the development of standardized methods of conducting business along with standardized methods of communication is critical. Without common business practices and a common language for communication, the speed and efficiency with which shippers can transact business across multiple pipelines is now, and will continue to be, severely compromised. The industry must expeditiously complete standardization of crucial business practices to make the promise of a restructured and integrated pipeline grid a reality. Accordingly, the Commission intends to establish, by rule, standards governing pipelines' conduct of crucial business practices and the electronic means by which pipelines will exchange information with their customers and third-parties.

The Commission will begin this process by focusing on the ten high priority data requirements identified by the industry itself. The items identified by the Working Group are nominations, confirmations, allocated gas flows, customer and contract imbalances, gas flow at metered points, transportation invoices, pre-determined allocation methodologies, gas payment remittance statements, gas sales invoices, and uploads of capacity release prearranged deals.

By March 15, 1996, the Commission is soliciting comments containing detailed proposals for the standard set of information (data elements) that the Commission should require all pipelines to use in conducting these ten business transactions as well as for standard nomenclature and standards for any associated business practices and procedures. As an example, commenters should propose a simplified standard set of nomination information that will be sufficient for customers to submit a nomination on any pipeline as well as a standard set of information that would be included in the pipeline's confirmation of that request. In addition to business practice standards, comments also should address how the information is to be communicated. Comments should include communication protocols for each business practice addressing the scheduling and response times of information exchanges, performance standards for assessing whether the system is substantially meeting those goals, or other needed communication issues.

The Commission expects the proposals to be sufficiently detailed that they could be included in a Notice of Proposed Rulemaking (NOPR). The comments submitted on March 15, 1996, also should propose an implementation schedule or plan, including development of the needed electronic communication standards and time for full and effective testing, so that the standards can be fully implemented by January 1, 1997.

In addition to the ten high priority data requirements, comments should address whether the Commission should adopt standards for pipeline business practices to help facilitate gas flow across the pipeline grid, such as the standards considered by the INGAA/AGD Grid Integration Project. For example, INGAA, in its letter, identified standards for nomination deadlines, gas day, the effective nomination period, and capacity release as ones appropriate for immediate consideration. Comments also should consider whether any revisions to current industry electronic communication protocols or practices are needed to facilitate the movement of gas across the pipeline grid, including alternatives to pipeline Electronic Bulletin Boards. Comments should include detailed proposals of standards that the Commission could adopt for implementation by January 1, 1997. The Commission recognizes that standardization is an ongoing and evolving process, and the Commission intends to be involved in further efforts to develop standards that will promote a national pipeline grid.[6]

The Commission urges representatives of the various segments of the industry to work together to achieve a consensus on these standards. The Commission's earlier efforts in this area benefitted greatly from the Working Groups' input. The Commission continues to believe that the industry should take the lead in developing and implementing standards that will be both practical and workable for the variety of business transactions which are presently taking place, as well as for those which may occur in the future. With the expansion of the scope of GISB's charter and the broad-based participation in GISB by all industry segments,[7] the Commission expects that GISB may become a forum through which these industry efforts can be coordinated. If GISB is able to provide substantive and timely proposals for

necessary for GISB to undertake the crafting of standards associated with the industry's business practices.

[5] These issues have been considered by the INGAA/American Gas Distributors (AGD) Grid Integration Project. *See* Grid Integration Project, Interim Reports of Task Forces (March 1995).

[6] For example, besides the ten high priority data elements, the Working Group identified 23 additional business issues that require standardization.

[7] The Commission is aware that not all industry participants are members of GISB, but the Commission's understanding is that the GISB process permits nonmembers to participate in developing standards.

standards relating to the high priority data elements described above, as well as others such as those identified in the Grid Integration Project, the Commission will give those proposals considerable weight. However, even in the absence of a consensus proposal from GISB, the Commission intends to move ahead with this proceeding.

As noted above, comments must be filed no later than March 15, 1996, along with an implementation plan which ensures that implementation occurs by January 1, 1997. The Commission recognizes, however, that with respect to discrete elements of the ten high priority items, or other business practices, the industry may reach a consensus on specific standards before that date.[8] To the extent the industry reaches consensus, the Commission encourages voluntary implementation of those consensus standards.

An original and 14 copies of comments in response to this notice must be filed with the Commission no later than March 15, 1996. Comments should be filed with the Office of the Secretary, Federal Energy Regulatory Commission, 888 First Street, N.E., Washington, DC 20426 and should refer to Docket No. RM96–1–000.

By the Commission.

Lois D. Cashell,

Secretary.

[FR Doc. 95–27010 Filed 10–31–95; 8:45 am]

BILLING CODE 6717–01–P

[8] For example, in its October 18, 1995 letter, INGAA represents that it intends to submit to GISB a pipeline consensus draft addressing the minimum data elements and nomenclature for nominations and confirmations by December 1995.

DEPARTMENT OF THE INTERIOR

Bureau of Indian Affairs

25 CFR Part 161

RIN 1076–AC81

Navajo Partitioned Land Grazing Regulations

AGENCY: Bureau of Indian Affairs, Department of the Interior.

ACTION: Proposed rule.

SUMMARY: The Bureau of Indian Affairs proposes to add Part 161 to 25 CFR to govern the grazing of livestock on the Navajo Partitioned Land (NPL) of the Navajo-Hopi Former Joint Use Area (FJUA) of the 1882 Executive Order reservation. The purpose of these regulations is to conserve the rangelands of the NPL in order to maximize future use of the land for grazing and other purposes.

DATES: Comments on these proposed rules must be submitted by January 2, 1996.

ADDRESSES: Send comments to Bureau of Indian Affairs, Division of Water and Land Resources, Room 4559, 1849 C Street N.W., Washington, DC 20240, or telephone number (202) 208–4004.

FOR FURTHER INFORMATION CONTACT: Robert Curley, (602) 871–5151, Ext. 5105, at the Navajo Area Office in Window Rock, Arizona.

SUPPLEMENTARY INFORMATION: As a result of the long-standing dispute between the Hopi Tribe and the Navajo Nation over beneficial ownership of the reservation created by the Executive Order of December 16, 1882, Congress passed the Act of July 22, 1958, 72 Stat. 403, which permitted the Navajo Nation and the Hopi Tribe to sue each other in federal court to resolve the issue. The Hopi Tribe initiated such a suit on August 1, 1958, in United States District Court for the District of Arizona in *Healing* v. *Jones,* 174 F. Supp. 211 (D. Ariz. 1959), (*Healing I*). The merits of the case were heard by a three judge panel of the United States District Court for the District of Arizona in *Healing* v. *Jones,* 210 F. Supp. 125 (D. Ariz. 1962) *aff'd* 373 U.S. 758 (1963), (*Healing II*) after the initial procedural challenges to the suit were dismissed in *Healing I.* The district court determined that while the Hopi Tribe had a right to the exclusive use and occupancy of a portion of the 1882 reservation known as District 6, it shared the remaining lands of the 1882 reservation in common with the Navajo Nation. Disputes between the two tribes continued over the right to use and occupy the 1882 reservation in spite of the district court's decision in *Healing II,* which was affirmed by the Supreme Court. In an attempt to resolve these ongoing problems, Congress enacted the Navajo-Hopi Settlement Act, 25 U.S.C. 640d—640d–31, which provided for the partition of the Joint Use Area of the 1882 reservation, excluding District 6, between the two tribes. The Act was amended by the Navajo-Hopi Indian Relocation Amendments Acts of 1980, 94 Stat. 929, due to the dissatisfaction expressed by both tribes with the relocation process.

The Relocation Act Amendments added subsection (c) to 25 U.S.C. 640d–18. It required the Secretary of the Interior to complete the livestock reduction program contained in 25 U.S.C. 640d–18(a) within 18 months of its enactment. The new subsection also required that all grazing control and range restoration activities be coordinated and executed with the concurrence of the tribe to which the land had been partitioned. In 1982, the U.S. District Court for the District of Arizona determined in *Hopi Tribe* v. *Watt,* 530 F. Supp. 1217 (D. Ariz. 1982), that the grazing regulations contained in Part 153 of 25 CFR were invalid with respect to the 1882 reservation partitioned to both the Navajo Nation and the Hopi Tribe. The court reached that conclusion because the regulations did not provide for the concurrence of the Navajo Nation or the Hopi Tribe as required by the Relocation Act Amendments. The district court's ruling was upheld by the Ninth Circuit Court of Appeals in *Hopi Tribe* v. *Watt,* 719 F. 2d 314 (9th Cir. 1983).

As a result of the decision in *Hopi Tribe v. Watt, Id.,* the Bureau of Indian Affairs sought the written concurrence of the Navajo Nation for the regulations which are herein published. The concurrence of the Navajo Nation to these regulations was provided by the Resources Committee of the Navajo Nation Council pursuant to resolution No. RCAP–079–92 of April 29, 1992. Non-substantive, editorial changes have been made to the proposed regulations which were approved by the Navajo Nation.

These regulations are being issued to implement the Secretary of the Interior's responsibilities mandated by the Navajo-Hopi Settlement Act, as amended by the Relocation Act Amendments, and the previously cited federal court decisions. In 1982 Part 152 of 25 CFR was redesignated as Part 167 and Part 153 of 25 CFR was redesignated as Part 168. All grazing permits issued for the Joint Use Area under the old 25 CFR Part 152, some of which dated from 1940, were canceled within one year pursuant to the Order of Compliance issued on October 14, 1972, by the U.S. District Court of the District of Arizona in *Hamilton v. MacDonald*, Civ. 579–PCT. From 1973 through 1978 the Bureau of Indian Affairs did not issue grazing permits for the Joint Use Area because it was necessary to complete a census of the human and animal populations of the Joint Use Area (JUA) in conjunction with a calculation of the range's carrying capacity and stocking rates. However, in late 1977 the Joint Use Area Administrative Office of the Bureau of Indian Affairs at Flagstaff, Arizona, completed its inventory and began issuing annual grazing permits to the residents of the JUA. These interim permits were limited to one year by order of the federal district court. Since the 1982 ruling in *Hopi v. Watt*, 530 F.2d 1217 (1983), declaring that the pre-1982 regulations were invalid, the

Bureau of Indian Affairs has been subject to the provisions of the Navajo-Hopi Settlement Act, as amended, which require the development of new grazing regulations for the Navajo Partitioned Land with the concurrence of the Navajo Nation. These regulations are the product of that consultation.

The grazing regulations in the proposed rules apply only to the Navajo Partitioned Lands.

It is the policy of the Department of the Interior to afford the public an opportunity to participate in the rulemaking process whenever feasible. Accordingly, interested parties may submit written comments, suggestions or objections regarding these proposed rules to the office identified in the ''ADDRESS'' section of the preamble. The primary author of this document is Robert Curley, P. O. Box 1060, Gallup, New Mexico 87305, telephone number 602/871–5151, Ext. 5106.

The Department of the Interior has determined that these proposed rules do not constitute a major federal action significantly affecting the quality of the human environment. Thus, no detailed environmental impact statement is required by the National Environmental Policy Act of 1969, 42 U.S.C. 4332 (1988).

The information collection requirements contained in these rules do not require the approval of the Office of Management and Budget under 44 U.S.C. 3501–3520.

E.O. 12866 Statement

This rule has been reviewed under Executive Order 12866.

Regulatory Flexibility Act Statement

This rule will not have a significant economic impact on a substantial number of small entities under the Regulatory Flexibility Act, 5 U.S.C. 601–612 (1988).

Takings Implication Assessments (E.O. 12630)

In accordance with E.O. 12630, the Department has determined that these proposed rules do not have significant takings implications.

List of Subjects in 25 CFR Part 161

Grazing lands, Indian lands, Livestock.

For reasons set forth in the preamble to this part, the Bureau of Indian Affairs proposes to add part 161 to title 25, chapter I of the Code of Federal Regulations as it appears below.

25 CFR PART 161—NAVAJO PARTITIONED LAND GRAZING REGULATIONS

Sec.

161.01 Definitions.
161.02 Authority.
161.03 Purpose.
161.04 Scope.
161.05 How range units are established.
161.06 Establishing and implementing Range Management Plans.
161.07 How range improvements are treated.
161.08 How carrying capacity and stocking rate are established.
161.09 Restriction on grazing permits.
161.10 Eligibility and priorities for issuing grazing permits.
161.11 How grazing permits are allocated.
161.12 Provisions required in all grazing permits.
161.13 Procedures for issuing permits.
161.14 Duration of grazing permits.
161.15 Kind and classes of livestock that may be grazed.
161.16 How grazing fees will be assessed and collected.
161.17 How permits may be assigned, modified, or cancelled.
161.18 Establishing and administering special land uses.
161.19 Livestock trespass.
161.20 Impoundment and disposal of trespassing livestock.
161.21 Controlling livestock diseases and parasites.
161.22 Procedures for Navajo Nation concurrence.
161.23 How to appeal decisions on grazing permits.
161.24 Information Collection.

Authority: 5 U.S.C. 301; 25 U.S.C. 2, 640d—640d31.

§ 161.01 Definitions.

As used in this part, terms shall have the meanings set forth in this section:

Allocate means to apportion grazing privileges, including the determination of who may graze livestock, the number and kind of livestock, and the place such livestock shall be grazed.

Animal unit (AU) means one adult cow with unweaned calf by her side or equivalent thereof based on comparative forage consumption. Accepted conversion factors are: Sheep and Goats—one ewe, doe, buck or ram equals 0.20 AU; one sheep unit year long (SUYL) equals 0.20 Animal Unit Year Long: Horses and Mules—one horse, mule, donkey or burro equals 1.25 AU.

Animal Unit Month (AUM) means the amount of feed or forage required by an animal unit for one month. The conversion factors under the definition of animal unit apply. Thus, for sheep, one animal unit month is the amount of feed or forage required by five sheep in one month.

Area Director means the officer in charge of the Navajo Area Office for the Bureau of Indian Affairs (or his/her designee or authorized representative).

BIA enumeration means the list of persons living on and improvements located within the Former Joint Use Area obtained by interviews conducted in 1974 and 1975 by the Project Officer's staff.

Carrying capacity means the maximum stocking rate possible without inducing a downward trend in forage production, forage quality, or related resources.

Class of animal means the age and/or sex of an animal. Example: cow, calf; ewe, lamb; doe, kid; mare, colt; etc.

Concurrence means agreement by the Area Director and the Navajo Nation.

Conservation practice means a method of management that seeks to maintain and/or improve natural resources on a sustained yield basis.

Former Joint Use Area (FJUA) means the area established by the United States District Court for the District of Arizona in *Healing v. Jones*, 210 F. Supp. 125 (1962), *aff'd* 373 U.S. 758 (1963), that is inside the Executive Order area [Executive Order of December 16, 1882] but outside Land Management District 6, and that was divided between the Navajo Nation and the Hopi Tribe by the Judgment of Partition issued April 18, 1979, by the United States District Court for the District of Arizona.

Grazing Permit means a revocable privilege granted in writing and limited to entering on and utilizing forage by domestic livestock on a specified tract of land. The term as used in this part shall include written authorizations issued to enable the crossing or trailing of domestic livestock across specified tracts or range units.

Hopi Partitioned Land or HPL means that portion of the Former Joint Use Area which was partitioned to the Hopi Tribe.

Immediate family member means any of the following:

(1) The living spouse of a decedent who was a former permittee;

(2) The children of the deceased if the spouse is not living; or

(3) Siblings of the deceased if neither a spouse or children are living.

Livestock inventory means the original list developed by the Project Officer in 1976–77 of livestock owned by persons with a grazing permit or shared grazing permit, and having customary grazing use in the Former Joint Use Area under 25 CFR part 167 (formerly part 152).

Management unit means a subdivision of a range unit.

Nation or Navajo Nation means the Resources Committee of the Navajo

Nation Council, which has been delegated authority to exercise the powers of the Navajo Nation with regard to the range development and grazing management of the Navajo Partitioned Land.

Navajo Partitioned Land or NPL means that portion of the Former Joint Use Area which has been partitioned to the Navajo Nation.

NPL Grazing Committee means the District Grazing Committee established by the Navajo Nation that is responsible, in whole or in part, for the NPL (affected areas).

Nonconcurrence means disagreement between the Area Director and the Navajo Nation.

Project Officer means the Bureau of Indian Affairs official (formerly the Special Project Officer of the Bureau of Indian Affairs Administrative Office, Flagstaff, Arizona), to whom is delegated the authority of the Commissioner of Indian Affairs to act in matters regarding the Navajo Partitioned Land of the Former Joint Use Area.

Range improvement means:

(1) Any structure or excavation to facilitate management of the range for livestock;

(2) Any practice designed to improve the range condition or facilitate more efficient utilization of the range; or

(3) Any modification resulting in an increase in the grazing capacity of the range.

Range management plan means a plan developed for the beneficial use of a range unit.

Range unit or range allotment means an area designated for the use of a prescribed number and kind of livestock under one plan of management.

Resident is a person who lives on the Navajo Partitioned Land full-time and previously utilized a customary use grazing permit under 25 CFR part 167 (formerly part 152).

Secretary means the Secretary of Interior or his/her designated representative.

Settlement Act means the Act of December 22, 1974, 25 U.S.C. 640d—640d–31.

Special land use means all land usage for purposes other than for grazing or pasture lands, for which permits, leases, or assignments are approved by the Area Director under Federal law, or by the Navajo Nation under the Navajo Tribal Code.

Special management area means an area for which a single management plan is developed and applied in response to special management objectives such as watersheds, fire hazard areas, or other similar concerns.

Stocking rate means the authorized number of Animal Units by range unit. (''Carrying capacity'' as used in the Settlement Act denotes stocking rate).

Useable land area means accessible land within a designated management area producing forage suitable for consumption by livestock.

§ 161.02 Authority.

It is within the general authority of the Secretary to protect Indian trust lands against waste and to prescribe rules and regulations under which these lands may be leased or permitted for grazing. Under the Navajo-Hopi Settlement Act, as amended, 25 U.S.C. 640d–8 and 640d–18, the Secretary is authorized and directed to:

(a) Adjust livestock grazing within the Former Joint Use Area to carrying capacity;

(b) Restore the grazing potential of the NPL to the maximum extent feasible;

(c) Survey, monument, and fence the partition boundary;

(d) Protect the rights and property of individuals awaiting relocation;

(e) Administer conservation practices, including grazing control and range restoration activities, on the Navajo Partition Lands.

§ 161.03 Purpose.

The regulations in this part are issued to implement the Secretary's responsibilities mandated by the Settlement Act. In general the regulations in this part are intended to aid in the preservation of forage, soil, and water resources on the Navajo Partitioned Land, and to aid in the recovery of those resources where they have deteriorated.

§ 161.04 Scope.

The grazing regulations in this part apply to the Navajo Partitioned Land within the boundaries of the Navajo Reservation held in trust by the United States for the Navajo Nation.

§ 161.05 How range units are established.

(a) The Area Director, in consultation with the NPL Grazing Committee and the grazing permittees, and with the concurrence of the Navajo Nation, shall establish or, where it has been determined that modification will significantly improve the management of all areas, modify range units on the Navajo Partitioned Land to provide unified areas for which range management plans can be developed to improve and maintain soil and forage resources. Physical land features, watersheds, drainage patterns, vegetation, soil resident concentrations, problem areas, historical land use patterns, and comprehensive land use planning shall be considered in the determination of range unit boundaries.

(b) The Area Director may modify range unit boundaries to include small and/or isolated portions of Navajo Partitioned Land with contiguous Navajo tribal lands in order to develop more economical land management areas. These modifications shall be made in consultation with the affected NPL grazing permittees, the grazing permittees on adjoining areas, the NPL Grazing Committee, and the Navajo Nation.

(c) Permittees must obtain archaeological clearances before any fencing or other land disturbance. Pursuant to Public Law 93–531, as amended, no action taken pursuant to, in furtherance of, or as authorized by the regulations in this part shall be deemed a major Federal action for purposes of the National Environmental Policy Act of 1969 as amended, 42 U.S.C. 4332.

§ 161.06 Establishing and implementing Range Management Plans.

(a) The Area Director shall confer with the Navajo Nation in planning conservation practices for the Navajo Partitioned Land. The Area Director shall develop range management plans in consultation with the NPL Grazing Committee and the grazing permittees residing in each range unit. After the Navajo Nation concurs with and the Area Director approves the range management plan, the implementation of the plan may begin immediately. The plan shall address, but shall not be limited to, the following issues:

(1) Goals for improving vegetative productivity;

(2) Incentives for carrying out the goals;

(3) Stocking rates;

(4) Grazing schedules;

(5) Wildlife management;

(6) Needs assessment for range and livestock improvements;

(7) Schedule for operation and maintenance of existing range improvements and the opportunities for installing privately or cooperatively funded projects;

(8) Cooperation in the implementation of range studies;

(9) Control of livestock diseases and parasites;

(10) Fencing or other structures necessary to implement any of the other provisions in the range management plan.

(b) Range management plans and actions shall require consultation with the affected grazing permittees.

(c) All range management plans, actions and decisions shall be submitted to the Navajo Nation for review and concurrence.

§ 161.07 How range improvements are treated.

Range improvements placed on the Navajo Partitioned Land shall be considered affixed to the land unless specifically exempted in the permit. No range improvement may be constructed or removed from Navajo Partitioned Land without the written consent of the Area Director and the Navajo Nation. All grazing permits shall state that the permittee is responsible for maintenance of range improvements specifically identified in the management plan.

§ 161.08 How carrying capacity and stocking rate are established.

(a) The Area Director, with the concurrence of the Navajo Nation, must prescribe the carrying capacity of each range unit by determining:

(1) The maximum number of each kind of livestock that can be grazed on the unit without damage to vegetation or related resources; and

(2) The season or seasons of use required to achieve the objectives of the land recovery program required by the Settlement Act.

(b) The stocking rate of each range or management unit shall be established by the Area Director, with the concurrence of the Navajo Nation, and shall be based on forage production, range utilization, the application of land management practices, and range improvements in place to achieve uniformity of grazing under sustained yield management principles on each range or management unit.

(c) The Area Director shall review the carrying capacity of the grazing units on a continuing basis and adjust the stocking rate for each range or management unit as conditions warrant.

(d) Any change in the stocking rate allowed in the grazing permits will be prorated on an equal percentage basis among the grazing permittees on the range or management unit.

§ 161.09 Restrictions on grazing permits.

Grazing use on range units is authorized only by permits granted under this part. A state brand only identifies the owner of the livestock, but does not authorize the grazing of any livestock within the NPL. Only a grazing permit issued pursuant to the regulations in this part authorizes the grazing of livestock within the NPL. Grazing permits shall be subject to the following restrictions:

(a) Grazing permits shall not be issued or subdivided for less than four animal units (20 sheep units);

(b) A grazing permit shall be issued in the name of one individual unless otherwise approved by the NPL Grazing Committee and the Area Director;

(c) Grazing permits shall be issued for use in one range unit only; and

(d) Grazing permits may contain additional conditions authorized by Federal or Navajo Tribal laws.

§ 161.10 Eligibility and priorities for issuing grazing permits.

(a) *Eligibility.* Only those applicants who meet the following criteria are eligible to receive permits to graze livestock:

(1) Those who had valid grazing permits or shared grazing permits under an extended family group agreement on Navajo Partitioned Land under 25 CFR part 167 (formerly part 152) and whose permits were cancelled on October 14, 1973;

(2) Those who are listed in the 1974–1975 FJUA enumeration;

(3) Those who are current residents on Navajo Partitioned Land; and

(4) Those who do not presently hold a valid grazing permit in a land management district within the Navajo Indian Reservation.

(b) *Priorities.* Applicants who are eligible to receive a permit under paragraph (a) of this section shall be assigned priorities based on the following criteria:

(1) First priority shall go to heads of households currently over the age of 65.

(2) Second priority shall go to heads of households under the age of 65.

(3) In each priority class, eligible applicants who had shared grazing permits shall be equal to those who had their own grazing permits.

§ 161.11 How grazing permits are allocated.

(a) Initial allocation of the number of Animal Units authorized in each grazing permit shall be based on the number of Animal Units previously authorized in prior grazing permits and the authorized stocking rate on a given range unit.

(b) Grazing permit allocations shall vary from range unit to range unit depending on the stocking rate of each unit, the management plan, and the number of eligible grazing permittees in the unit.

(c) Any change in carrying capacity requiring adjustments to the stocking rate shall be prorated on an equal percentage basis to permittees on each range unit.

§ 161.12 Provisions required in all grazing permits.

(a) All grazing permits shall contain the following provisions:

(1) The permittee agrees he/she will not use, cause, or allow to be used any part of the permitted area for any unlawful conduct or purpose.

(2) The permit authorizes no privilege other than grazing use.

(3) No person is allowed to hold a grazing permit in more than one range unit of the Navajo Partitioned Land.

(b) Any other special provision which, in the discretion of the Area Director and with the concurrence of the Navajo Nation, is necessary to protect the land and resource may be added to the permit.

§ 161.13 Procedures for issuing permits.

The Area Director shall issue grazing permits only to individuals that meet the eligibility requirements of § 161.10 (a). Responsibilities for the initial issuance of grazing permits shall be as follows:

(a) The Area Director shall develop a complete list of all prior permit holders, including shared permittees under an extended family agreement, who had grazing permits cancelled on the NPL and HPL and who now reside on the NPL. This list shall be provided to the NPL Grazing Committee for its review. The Area Director shall also provide the NPL Grazing Committee with his/her determination of the carrying capacity and stocking rate for each range unit within the NPL.

(b) Within 45 days of receipt, the NPL Grazing Committee shall review the list of potential permittees provided by the Area Director for a range unit, and, according to the eligibility and priority criteria set forth in § 161.10, and make recommendations to the Navajo Nation for the granting of grazing permits on the range unit. The Committee shall also make a recommendation for initial permit allocation of animal units for each permit application.

(c) If the NPL grazing committee fails to make its recommendation to the Navajo Nation within 45 days after receiving the list of potential permittees for a range unit and the determination of stocking rate, then the Area Director shall submit his/her recommendations to the Navajo Nation.

(d) The Navajo Nation shall review and concur with the list of proposed permit grantees, including the initial permit allocation of animal units, and then forward a final list to the Area Director for the issuance of grazing permits.

§ 161.14 Duration of grazing permits.

Each new grazing permit shall be valid until January 1 of the year following its issuance. After its initial issuance, each grazing permit is valid for one year beginning on January 1. All grazing permits that are being used by

permittees shall be automatically renewed annually until cancelled. If a grazing permit is not used by the permittee for a one year period, the Area Director may cancel the permit.

§ 161.15 Kind and classes of livestock that may be grazed.

Unless otherwise determined by the Area Director for conservation purposes and specified in the grazing permit, the permittee may determine the kind and class of livestock that may be grazed on range units.

§ 161.16 How grazing fees will be assessed and collected.

If requested by the Navajo Nation, the Area Director shall assess and collect grazing fees under the following procedures:

(a) Fees are to be paid in advance, due and payable by January 1, with a 30-day grace period thereafter;

(b) Fees shall be collected by the Area Director and thereafter transferred to the Navajo Nation to be set aside for range management purposes in grazing management areas;

(c) All grazing permittees who fail to pay the prescribed fees by January 1, or within the 30-day grace period, shall be subject to a reasonable late charge set by the Navajo Nation;

(d) If payment is not received after 90 days the grazing permit shall be subject to cancellation.

§ 161.17 How permits may be assigned, modified, or cancelled.

(a) Grazing permits may be assigned, sub-permitted or transferred only as provided in this section. Permits may only be inherited or assigned as a single permit, with the approval of the Navajo Nation and the Area Director, to another immediate family member who has retained full time residency on the NPL.

(b) The Area Director shall notify the Navajo Nation before taking any adverse actions. The Area Director may revoke or withdraw all or any part of a grazing permit by cancellation or modification on 60 days written notice to a grazing permittee of a violation of the permit or special conditions affecting the land or the safety of the livestock thereon, including, but not limited to, flood, disaster, drought, contagious diseases; or for non-payment of grazing fees or violation of these regulations; or violation of Federal or tribal laws. Except in the case of extreme necessity, specified in the notice, cancellation or modification shall be effective on the next anniversary date of the grazing permit following the date of notice.

§ 161.18 Establishing and administering special land uses.

The Navajo Nation and the Area Director may establish special land uses, including leases, withdrawals, and land assignments. If a special land use is inconsistent with issued grazing permits or range management plans, the special use will govern and will require the amendment of the grazing permits and range management plans.

§ 161.19 Livestock trespass.

The owner of any livestock grazing in trespass on the Navajo Partitioned Land is liable for a minimum civil penalty of one dollar per head per day for each cow, bull, horse, mule, or donkey and twenty-five cents per day for each goat or sheep in trespass, together with the replacement value of the forage consumed and a reasonable value for damages to property injured or destroyed. The Area Director may collect penalties and damages and seek injunctive relief when appropriate. All payments for penalties and damages shall be credited to the Navajo Nation's special deposit account. The following acts are prohibited:

(a) Grazing or driving livestock across the Navajo Partitioned Land without an approved grazing or crossing permit;

(b) Allowing livestock to drift and graze on the NPL without an approved permit;

(c) Grazing livestock in an area closed to grazing for that class of livestock;

(d) Grazing livestock upon any land that the Area Director has withdrawn from grazing use to protect it from damage, after notice of the withdrawal is received; and

(e) Grazing more in number or kinds of livestock than are authorized by an appropriate grazing permit.

§ 161.20 Impoundment and disposal of trespassing livestock.

(a) The Area Director shall notify the NPL Grazing Committee of any livestock trespass on the NPL.

(b) After the NPL Grazing Committee has been notified or otherwise becomes aware of the existence of the livestock trespass, a five day period shall be allowed for the NPL Grazing Committee to resolve the livestock trespass with the grazing permittee or livestock owner before formal trespass action is taken.

(c) If trespassing livestock within a range unit are not removed within the periods prescribed in this section, the Area Director shall impound and dispose of it as follows:

(1) If the Area Director knows of the class of livestock and the name and address of the owners, he/she may impound the livestock any time five days after mailing by certified mail or having delivered to the owners or their agent a Notice of Intent to Impound.

(2) When the Area Director does not know of the number and class of livestock or the name and address of the owner, he/she shall impound the livestock anytime 15 days after the date of a General Notice of Intent to Impound is:

(i) Published in the local newspaper;

(ii) Posted at the nearest chapter house or in one or more local trading posts; and

(iii) Announced in English and in Navajo by a local radio station.

(3) The Area Director may impound trespassing livestock owned by a person given notice under paragraphs (c)(1) and (2) of this section without further notice within the six-month period immediately following the effective date of the notice.

(4) Following the impoundment of trespassing livestock, a Notice of Sale of Impounded Livestock shall be published in a local newspaper, posted at the nearest chapter, posted in one or more local trading posts, and announced in English and in Navajo by a local radio station. The notice shall describe the livestock and specify the date, time, and place of sale. The date set shall be at least five days after the publication, posting, and announcement of the notice.

(5) The owner or his or her agent may redeem the livestock any time before the time set for this sale by submitting proof of ownership and paying for the expenses incurred in gathering, impounding, and feeding or pasturing the livestock and any trespass fees and damages assessed under § 161.19 and/or other damages caused by the animal.

(6) The Area Director shall return erroneously impounded livestock to the residence of the rightful owner and shall waive all expenses.

(7) Livestock not redeemed before the time fixed for their sale shall be sold at a public sale or auction to the highest bidder, provided the bid is at or above the minimum amount set by the Area Director and the Navajo Nation.

(8) The proceeds of any sale of impounded livestock shall be applied in the following order:

(i) Toward the payment of all expenses incurred by the Area Director in gathering, impounding and feeding or pasturing the livestock; and

(ii) Toward the payment of any penalties or damages assessed pursuant to § 161.19.

(9) Any proceeds remaining after payment of the two items in paragraphs (c)(8) (i) and (ii) of this section and not claimed within one year from the date

of sale shall be credited to a special fund for the Navajo Partitioned Land.

§ 161.21 Controlling livestock disease and parasites.

Whenever livestock are exposed to or become infected with contagious or infectious diseases or parasites the owner must treat the livestock and restrict their movement in accordance with applicable laws.

§ 161.22 Procedures for Navajo Nation concurrence.

(a) Subject to the Secretary's authority and except where indicated otherwise, the Navajo Nation has the right to consult with the Area Director and concur in the establishment of range units, range management plans, and special management areas.

(b) For any action requiring the concurrence of the Navajo Nation, the following procedures shall apply:

(1) Unless a longer time is specified in a particular section of the regulations in this part, or unless the Area Director grants an extension of time, the Navajo Nation shall have 35 days to review and concur with the proposed action.

(2) If the Navajo Nation concurs in writing with all or part of the Area Director's proposed action, then the action or a portion of it may be immediately implemented.

(3) If the Navajo Nation does not concur with all or part of the proposed action within 35 days the Area Director shall submit to the Navajo Nation a written declaration of non-concurrence. The Area Director shall then notify the Navajo Nation in writing of a formal hearing to be held not sooner than 30 days from the date of the non-concurrence declaration.

(4) The formal hearing on non-concurrence will permit the submission of written evidence and argument concerning the proposal. The Area Director shall take minutes of the hearing. Following the hearing, the Area Director may amend, alter, or otherwise change his/her proposed action. If, following a hearing, the Area Director alters or amends portions of his/her proposed plan of action, he/she shall submit the altered or amended portions of the plan to the Navajo Nation for its concurrence.

(5) If the Navajo Nation fails or refuses to give its concurrence to the proposal at the hearing, the Area Director may implement the proposal only after issuing a written order, based upon findings of fact, that the proposed action is necessary to protect the land pursuant to his/her responsibilities under the Settlement Act.

§ 161.23 How to appeal decisions on grazing permits.

Appeals of decisions issued under this part will be in accordance with procedures in 25 CFR part 2.

§ 161.24 Information collection.

The information collection requirement(s) contained in the regulations in this part do not require approval by the Office of Management and Budget under 44 U.S.C. 3501–3520.

Editorial Note: This document was received at the Office of the Federal Register on October 24, 1995.

Dated: February 3, 1995.

Ada E. Deer,

Assistant Secretary—Indian Affairs.

[FR Doc. 95–26686 Filed 10–31–95; 8:45 am]

BILLING CODE 4310–02–P

DEPARTMENT OF TRANSPORTATION

Coast Guard

33 CFR Part 100

[CGD 09–95–029]

Special Local Regulations; Great Lakes Annual Marine Events

AGENCY: Coast Guard, DOT.

ACTION: Notice of proposed rulemaking.

SUMMARY: The Coast Guard proposes to revise its list of annual marine events which occur within the Ninth Coast Guard District. Publication of this list in part 100 of the Code of Federal Regulations will establish permanent special local regulations for marine events within the Ninth Coast Guard District which recur on an annual basis and which have been determined by the District Commander to require the issuance of special local regulations. This action is being taken to ensure the safety of life and property during each event, while avoiding the necessity of publishing a separate temporary regulation each year for each event. The list reflects the approximate dates and locations of each annual marine event.

DATES: Comments must be received on or before December 18, 1995.

ADDRESSES: Comments should be mailed to Commander (oan), Ninth Coast Guard District, 1240 East 9th Street, Cleveland, Ohio 44199–2060. The comments will be available for inspection and copying at the Aids to Navigation and Waterways Management Branch, Room 2083, 1240 East 9th Street, Cleveland, Ohio. Normal office hours are between 7 a.m. and 3:30 p.m., Monday through Friday, except holidays. Comments may also be hand delivered to this address. Annual notice of the exact dates and times of the effective period of the regulation with respect to each event, the geographical area, and details concerning the nature of the event and the number of participants and type(s) of vessels involved will also be published in local notices to mariners. To be placed on the mailing list for such notices, write to Commander (oan), Ninth Coast Guard District, 1240 East Ninth Street, Cleveland, Ohio, 44199–2060.

FOR FURTHER INFORMATION CONTACT: Marine Science Technician Second Class Jeffrey M. Yunker, Ninth Coast Guard District, Aids to Navigation and Waterways Management Branch, 1240 East Ninth Street, Cleveland, Ohio, 44199–2060, (216) 522–3990.

SUPPLEMENTARY INFORMATION:

Request for Comments

The Coast Guard encourages interested persons to participate in this rulemaking by submitting written data, views, or arguments. Persons submitting comments should include their name and address, identify this rulemaking [CGD09–95–029] and the specific section of this proposal to which each comment applies, and give a reason for each comment. Persons wanting acknowledgment of receipt of comments should enclose a stamped, self-addressed postcard or envelope. The Coast Guard plans no public hearing. Persons may request a public hearing by writing to the Project Officer at the address under ''**ADDRESSES**.'' If it determines that the opportunity for oral presentations will aid this rulemaking, the Coast Guard will hold a public hearing at a time and place announced by a later notice in the Federal Register.

Drafting Information

The drafters of these regulations are Lieutenant Junior Grade Byron D. Willeford, Project Officer, Ninth Coast Guard District, Aids to Navigation and Waterways Management Branch and Lieutenant Charles D. Dahill, Project Attorney, Ninth Coast Guard District Legal Office.

Discussion of Proposed Regulations

If adopted, this rulemaking will update an existing list of anticipated annual events. Each year various public and private organizations sponsor marine events on the navigable waters of the United States within the Ninth Coast Guard District. These events include slow moving boat parades, sailboat races, high speed hydroplane races, fireworks displays, and other water related events. The listed events

are held in approximately the same location during the same general time frame each year. Exact times and dates will be published in the Local Notice to Mariners instead of being published in this final rule. This method streamlines the marine event process for those regattas and marine events which have little variation from year to year. Additionally, it significantly reduces the Coast Guard's administrative burden for managing these events, with no reduction in services to the maritime community. The nature of each event is such that special local regulations are deemed necessary to ensure the safety of life, limb, and property on and adjacent to navigable waters during the events. Group Commanders have consulted and will continue to consult with parties potentially affected by any significant changes to the nature, date, time, and location proposed by an event sponsor for any of the events covered in this rule.

Table 1 gives the approximate dates, times, and locations for the annual events listed. Each year, one or more Local Notice to Mariners will be published giving the exact dates, times, and locations for the annual events. It should be noted that Table 1 in the regulation is not a complete list of all marine events that will occur in the Ninth Coast Guard District. It does not include events which do not require special local regulations for the safety of life, limb, and property on or adjacent to navigable waters. It also does not include nonannual events or events which have not been scheduled in time for this publication.

Federalism Implications

This action has been analyzed in accordance with the principles and criteria contained in Executive Order 12612, and it has been determined that the rulemaking does not have sufficient federalism implications to warrant the preparation of a Federalism Assessment.

Environment

The Coast Guard is simply proposing to revise its list of annual marine events. The listing itself will not affect the environment. Upon receipt of applications, the Coast Guard will conduct an environmental analysis for each event in accordance with section 2.B.2.c of Coast Guard Commandant Instruction M16475.1B, and the Coast Guard Notice of final agency procedures and policy for categorical exclusions found at 59 FR 38654 (July 29, 1994).

Economic Assessment and Certification

These regulations are not a significant regulatory action under section 3(f) of Executive Order 12866 and do not require an assessment of potential costs and benefits under section 6(a)(3) of that order. They have been exempted from review by the Office of Management and Budget under that order. They are not significant under the regulatory policies and procedures of the Department of Transportation (DOT) (44 FR 11040; February 26, 1979). The Coast Guard expects the economic impact of these regulations to be so minimal that a full Regulatory Evaluation under paragraph 10e of the regulatory policies and procedures of the DOT is unnecessary.

Collection of Information

These regulations will impose no collection information requirements under the Paperwork Reduction Act, 44 U.S.C. 3501 et seq.

List of Subjects in 33 CFR Part 100

Marine safety, Navigation (water), Reporting and recordkeeping requirements, Waterways.

Proposed Regulations

In consideration of the foregoing, the Coast Guard proposes to amend Part 100 of Title 33, Code of Federal Regulations, as follows:

PART 100—[AMENDED]

1. The authority citation for Part 100 continues to read as follows:

Authority: 33 U.S.C. 1233; 49 CFR 1.46 and 33 CFR 100.35.

2. Section 100.901 is amended by revising Table 1 to read as follows:

§ 100.901 Great Lakes annual marine events.

* * * * *

TABLE 1

Group Buffalo, NY:

Fireworks By Grucci
Sponsor: New York Power Authority
Date: Last weekend of July
Location: Lake Ontario, Wright's Landing/Oswego Harbor, NY within an 800 foot radius of the fireworks launching platform locating in approximate position 43°28′10″ N 076°31′04″ W.

Flagship International Kilo Speed Challenge
Sponsor: Preseque Isle Powerboat Racing Association
Date: 3rd or 4th weekend of June
Location: That portion of Lake Erie, Presque Isle Bay, south of a line drawn from 42°08′54″ N 080°05′42″ W; to 42°07′ N 080°21′ W will be a regulated area. That portion of Lake Erie, Presque Isle Bay, north of a line drawn from 42°08′54″ N 080°05′42″ W; to 42°07′ N 080°21′ W will be a ''caution area''. All vessels transiting the caution area will be operated at bare steerageway, keeping the vessel's wake at a minimum, and will exercise a high degree of caution in the area. The bay entrance will not be effected.

Flagship International Offshore Challenge
Sponsor: Presque Isle Powerboat Racing Association
Date: 3rd or 4th weekend of June
Location: That portion of Lake Erie, Presque Isle Bay, Entrance Channel, and the enclosed area from Erie Harbor Pier Head Light (LLNR 3430) northeast to 42°12′48″ N 079°57′24″ W, thence south to shore just east of Shades Beach.

Friendship Festival Airshow
Sponsor: Friendship Festival
Date: 4th of July holiday
Location: That portion of the Niagara River and Buffalo Harbor from:

Latitude	*Longitude*
42°54.4′ N	078°54.1′ W, thence to
42°54.4′ N	078°54.4′W, thence along the International Border to
42°52.9′ N	078°54.9′ W, thence to
42°52.5′ N	078°54.3′ W, thence to
42°52.7′ N	078°53.9′ W, thence to
42°52.8′ N	078°53.8′ W, thence to
42°53.1′ N	078°53.6′ W, thence to
42°53.2′ N	078°53.6′ W, thence to
42°53.3′ N	078°53.7′ W, thence along the breakwall to
42°54.4′ N	078°54.1′ W.

Geneva Offshore Grand Prix
Sponsor: Great Lakes Offshore Powerboat Racing Association
Date: 3rd or 4th weekend of May
Location: That portion of Lake Erie from:

Latitude	*Longitude*
41°51.5′ N	080°58.2′ W, thence to
41°52.4′ N	080°53.4′ W, thence to
41°53′ N	080°53.4′ W, thence to
41°52.2′ N	080°58.2′ W, thence to
41°51.5′ N	080°58.2′ W.

NFBRA Red Dog Kilo Time Trials
Sponsor: Niagara Frontier Boat Racing Association
Date: 4th or 5th weekend of September
Location: That portion of the Niagara River, Tonawanda Channel, between Tonawanda Channel Buoy 31 to approximately ½ mile southwest of Twomile Creek along a line drawn from 43°00′45″ N 078°55′06″ W to 43°00′28″ N 078°54′56″ W (Sipco Oil Company).

Offshore Series Grand Prix
Sponsor: Great Lakes Offshore Powerboat Racing Assn.
Date: 2nd or 3rd weekend of

September
Location: That portion of Lake Erie from:

Latitude	Longitude
41°51.5′ N	080°58.2′ W, thence to
41°52.4′ N	080°53.4′ W, thence to
41°53.0′ N	080°53.4′ W, thence to
41°52.2′ N	080°58.2′ W, thence to
41°51.5′ N	080°58.2′ W.

Sodus Bay 4th of July Fireworks
Sponsor: Sodus Bay Historical Society
Date: 4th of July holiday
Location: Lake Ontario, within a 500 foot radius around a barge anchored in approximate position 43°15.73′ N 076°58.23′ W, in Sodus Bay.

Tallship Erie
Sponsor: Erie Maritime Programs, Inc.
Date: 1st or 2nd weekend of July
Location: That portion of Lake Erie, Presque Isle Bay Entrance Channel and Presque Isle Bay from:

Latitude	Longitude
42°10′ N	080°03′ W, thence to
42°08.1′ N	080°07′ W, thence to
42°07.9′ N	080°06.8′ W, thence east along the shoreline and structures to:
42°09.2′ N	080°02.6′ W, thence to
42°10′ N	080°03′ W.

Thomas Graves Memorial Fireworks Display
Sponsor: Port Bay Improvement Association
Date: 1st or 2nd weekend of July
Location: That portion of Lake Ontario, Port Bay Harbor, NY within a 500 ft radius surrounding a barge anchored in approximate position 43°17′46″ N 076°50′02″ W.

Thunder Island Offshore Challenge
Sponsor: Thunder on the Water Inc.
Date: 3rd or 4th weekend of June
Location: That portion of Lake Ontario, Oswego Harbor from the West Pier Head Light (LLNR 2080) north to:

Latitude	Longitude
43°29′02″ N	076°32′04″ W, thence to
43°26′18″ N	076°39′30″ W, thence to
43°24′55″ N	076°37′45″ W, thence along the shoreline to the West Pier Head Light (LLNR 2080).

We Love Erie Days Fireworks
Sponsor: We Love Erie Days Festival, Inc.
Date: 3rd weekend of August
Location: That portion of Lake Erie, Erie Harbor, within a 300 foot radius, surrounding the Erie Sand and Gravel Pier, located in position 42°08′16″ N 080°05′40″ W.

Group Detroit, MI

Bay City Fireworks Display
Sponsor: Bay City Fraternal Order of Police, Lodge 103
Date: 4th of July holiday
Location: Saginaw River, from the Veterans Memorial Bridge to approximately 1000 yards south to the River Walk Pier, near Bay City, MI

Detroit APBA Gold Cup Race
Sponsor: Spirit of Detroit Association
Date: 1st or 2nd weekend of June
Location: Detroit River, between Belle Isle and the U.S. shoreline, near Detroit, MI. Bound on the west by the Belle Isle Bridge and on the east by a north-south line drawn through the Waterworks Intake Crib Light (LLNR 1022).

Buick Watersports Weekend
Sponsor: Adore Ltd. and APBA
Date: 3rd or 4th weekend of July
Location: That portion of the Saginaw River from the Liberty Bridge on the north to the Veterans Memorial Bridge on the south, near Bay City, MI

Cleveland Charity Classic
Sponsor: Lake Erie Offshore Racing, Ltd.
Date: 3rd or 4th weekend of July
Location: That portion of Lake Erie, Cleveland Harbor from the Cleveland Waterworks Intake Crib Light (LLNR 4030) to:

Latitude	Longitude
41°30.7′ N	081°43.1′ W (West Pierhead Light, LLNR 4160), thence along the breakwater to
41°30.4′ N	081°42.9′ W (West Breakwater Light, LLNR 4175), thence to
41°30.2′ N	081°42.8′ W (West Pier Light, LLNR 4185), thence along the shoreline and structures to
41°32.5′ N	081°38.3′ W (Disposal Light B, LLNR 4045), thence to
41°33′ N	081°45′ W (Cleveland Waterworks Intake Crib Light LLNR 4030).

Cleveland National Air Show
Sponsor: Cleveland National Air Show
Date: Labor Day Weekend
Location: That portion of Lake Erie and Cleveland Harbor (near Burke Lakefront Airport) from a line running perpendicular from Dock No. 34 on the west, to 2000 feet north of the breakwater, then parallel to the breakwater, to a line running perpendicular from the east end of the Burke Lakefront Airport land fill.

Cleveland Offshore Grand Prix
Sponsor: Great Lakes Offshore Powerboat Racing Assn.
Date: 1st or 2nd weekend of August
Location: That portion of Lake Erie, Cleveland Harbor from the Cleveland Waterworks Intake Crib Light to:

Latitude	*Longitude*
41°30.7′ N	081°43.1′ W (West Pierhead Light, LLNR 4160), thence along the breakwater to,
41°30.4′ N	081°42.9′ W (West Breakwater Light, LLNR 4175), thence to,
41°30.2′ N	081°42.8′ W (West Pier Light, LLNR 4185), thence along the shoreline and structures to,
41°32.5′ N	081°38.3′ W (Disposal Light B, LLNR 4045), thence to,
41°33′ N	081°45′ W (Cleveland Waterworks Intake Crib Light LLNR 4030).

Flatsfest
Sponsor: Flats Riverfest Corporation
Date: 3rd or 4th weekend of July
Location: Cuyahoga River, Conrail Railroad Bridge at Mile 0.8 above the mouth of the river to the Eagle Avenue Bridge, near Cleveland, OH.

International Bay City River Roar
Sponsor: Bay City River Roar, Inc.
Date: 3rd or 4th weekend of June
Location: That portion of the Saginaw River from the Liberty Bridge on the north to the Veterans Memorial Bridge on the south, near Bay City, MI

International Freedom Festival Fireworks
Sponsor: Detroit Renaissance Foundation
Date: 3rd or 4th week of June
Location: The Detroit River between 083°03′ W (Cobo Hall) and 083°01′27″ W (Huron Cement).

International Freedom Festival Tug Across the River
Sponsor: Detroit Renaissance Foundation
Date: 3rd or 4th week of June
Location: That portion of the Detroit River bounded on the south by the International Boundary, on the west by 083°03′ W, on the east by 083°02′ W, and on the north by the U.S. shoreline.

Port Clinton Offshore Grand Prix
Sponsor: Great Lakes Offshore Powerboat Racing Association
Date: 1st or 2nd weekend of July
Location: That portion of western Lake Erie:

Latitude	*Longitude*
41°31.2′ N	082°56.1′ W, thence along the shoreline and structures to
41°33.3′ N	082°51.3′ W, thence to
41°33.3′ N	082°52.8′ W, thence to
41°31.2′ N	082°56.1′ W.

Port Huron to Mackinac Island Race
Sponsor: Bayview Yacht Club
Date: 2nd or 3rd weekend of July
Location: That portion of the Black River, St. Clair River, and Lower Lake Huron from:

Latitude	*Longitude*
42°58.8′ N	082°26′ W, to
42°58.4′ N	082°24.8′ W, thence northward along the International Boundary to
43°02.8′ N	082°23.8′ W, to
43°02.8′ N	082°26.8′ W, thence southward along the U.S. shoreline to
42°58.9′ N	082°26′ W, thence to
42°58.8′ N	082°26′ W.

Thunder on the River Hydroplane Race
Sponsor: Toledo Prop Spinners
Date: 3rd or 4th weekend of August
Location: Maumee River, between the Martin Luther King and Anthony Wayne bridges, near Toledo, OH

Toledo 4th of July Fireworks
Sponsor: City of Toledo
Date: 4th of July weekend
Location: Maumee River, between the Martin Luther King and Anthony Wayne bridges, near Toledo, OH

Toledo Labor Day Fireworks
Sponsor: Reams Broadcasting Corporation
Date: Labor Day
Location: Maumee River, between the Martin Luther King and Anthony Wayne bridges, near Toledo, OH

Group Sault Ste. Marie, MI

Bridgefest Regatta
Sponsor: Bridgefest Committee
Date: 2nd weekend of June
Location: Keweenaw Waterway, from the Houghton Hancock Lift Bridge to 1000 yards west of the bridge, near Houghton, MI

Duluth Fourth Fest Fireworks
Sponsor: Office of the Mayor, Duluth, MN
Date: 4th of July weekend
Location: That portion of the Duluth Harbor Basin Northern Section bounded on the south by a line drawn on a bearing of 087° true from the Cargill Pier through Duluth Basin Lighted Buoy #5 (LLNR 15905) to the opposite shore on the north by the Duluth Aerial Bridge. That portion of Duluth Harbor Basin Northern Section within 600 yards of position 46°46′47″ N 092°06′10″ W.

July 4th Fireworks
Sponsor: City of Sault Ste Marie, MI
Date: 4th of July weekend
Location: That portion of the St. Marys River, Sault Ste. Marie, MI within a 1000 foot radius of Brady Park, located on the south shore of the river. These waters are enclosed by the Locks to the west and to the east from a line drawn from the pier light of the east center pier to the U.S. Coast Guard Base to the southeast.

National Cherry Festival Blue Angels Air Demonstration
Sponsor: National Cherry Festival Inc.
Date: lst week of July
Location: That portion of the Western arm of the Grand Traverse Bay, Traverse City, MI, enclosed by straight lines connecting the following geographic coordinates:

Latitude	*Longitude*
44°46.8′ N	085°38.3′ W, to
44°46.5′ N	085°35.5′ W, to
44°46′ N	085°35.8′ W to
44°46.5′ N	085°38.5′ W, thence to
44°46.8′ N	085°83.3′ W.

Venetian Festival Yacht Parade
Sponsor: Charlevoix Chamber of Commerce
Date: 3rd or 4th weekend of July
Location: That portion of the upper and lower section of the Pine River, to include Round Lake, from:

Latitude	*Longitude*
45°19.3′ N	085°15.9′ W, (North Pierhead Light, LLNR 17920) thence to,
45°18.9′ N	085°14.7′ W, (Pine River Light 3, LLNR l7945) thence to,
45°18.8′ N	085°14.7′ W, (Pine River Channel Lighted Buoy 2, LLNR 17950) thence to,
45°19′ N	085° 15.9′ W, (South Pierhead Light, LLNR 17925) thence to,
45°19.3′ N	085°15.9′ W.

Group Grand Haven, MI

City Fireworks
Sponsor: City of Frankfort, MI
Date: 4th of July Holiday
Location: Lake Michigan, Frankfort, MI within a 1000 foot radius of the fireworks launching site located on Lake Michigan Beach in approximate position 44°38′ N 086°14′50″ W.

Coast Guard Festival Fireworks
Sponsor: Grand Haven Coast Guard Festival, Inc.
Date: lst weekend of August
Location: That portion of the Grand River, Grand Haven, MI, from a north-south line drawn from the North Pierhead Light Number 1 (LLNR 18045) on the north to the South Pierhead Entrance Light (LLNR 18035) on the south, thence down river to the US 31 Bascule Bridge (mile 2.89).

4th of July Fireworks
Sponsor: WSJM & WIRX Radio
Date: 4th of July Holiday
Location: St. Joseph River, within a 1000 foot radius of the fireworks launching site, located at the St. Joseph South Pier, in approximate position 42°06′48″ N 086°29′15″ W.

Grand Haven Area Jaycees Annual 4th of July Fireworks Display
Sponsor: Grand Haven Area Jaycees
Date: lst week of July
Location: That portion of the Grand River, Grand Haven, MI from the pier heads (mile 0.0) to the US 31 Bascule Bridge (mile 2.89).

Holland Jaycees Fireworks
Sponsor: Holland Jaycees
Date: 4th of July Holiday
Location: The portion of Lake Michigan, Holland, MI within a 1000 foot radius of the fireworks launching site, located in Kollen Park, in approximate position 42°47′20″ N 086°07′12″ W.

Ludington Area Jaycees Freedom Festival Fireworks
Sponsor: Ludington Area Jaycees
Date: 4th of July Holiday
Location: Lake Michigan, Ludington Harbor, MI, within a 1,000 foot radius of the fireworks launching site located at the Loomis Street Boat Launch, in approximate position 43°57′16″ N 086°27′42″ W.

Muskegon Summer Celebration Fireworks
Sponsor: The Muskegon Summer Celebration
Date: 4th of July Holiday
Location: That portion of Muskegon Lake, in the vicinity of Heritage Landing, with a 1,000 foot radius of the fireworks launching site, located in approximate position 43°13′52″ N 086°15′48″ W.
Impact on Special Anchorage Area regulations: Regulations for that portion of the Muskegon Lake East Special Anchorage Area, as described in 33 CFR 110.81(b), which are overlapped by this regulation, are suspended during this event. The remaining area of the Muskegon Lake East Special Anchorage Area not impacted by this regulation remains available for anchoring during this event.

South Haven 4th of July Fireworks
Sponsor: South Haven Jaycees
Date: 4th of July Holiday
Location: Lake Michigan, Black River, South Haven, MI within a 1,000 foot radius of the fireworks launching site located on the North Pier, in approximate position 42°24′08″ N 086°17′03″ W. Datum: NAD 1902.

Tulip Time Fireworks and Water Ski Show
Sponsor: Holland Tulip Time Festival

Inc.
Date: 1st weekend of May
Location: That portion of Lake Macatawa, Holland Harbor, east of a north-south line, from shore to shore, at position 086°08′ W.

Tulip Time Water Ski Show
Sponsor: Holland Tulip Time Festival Inc.
Date: 2nd weekend of May
Location: That portion of Lake Macatawa, Holland Harbor, east of a north-south line, from shore to shore, at position 086°08′ W.

Van Andel Fireworks Show
Sponsor: Amway Corporation, Ada, MI
Date: 4th of July Holiday
Location: Lake Michigan, Holland Harbor, MI, South Pier, within a 1,000 foot radius of the fireworks launching site located in approximate position 42°46′21″ N 086°12′48″ W.

Venetian Festival Fireworks Display
Sponsor: Venetian Festival on the St. Joseph River Inc.
Date: 3rd weekend of July
Location: St. Joseph River, within a 1,000 foot radius of the fireworks launching site, located at the St. Joseph South Pier, in approximate position 42°06′48″ N 086°29′15″ W.

Waves of Thunder Offshore Spectacular
Sponsor: Michigan Offshore Powerboard Racing Association
Date: 3rd weekend of June
Location: That portion of Lake Michigan, from the South Pierhead Light (LLNR 18520) south along the shoreline to:

Latitude	*Longitude*
42°19′ N	086° 19.3′ W, thence to
42°19.5′ N	086° 19.8′ W, thence to
42°23.9′ N	086° 18.7′ W, thence to
42°23.9′ N	086° 17′ W.

West Michigan Offshore Powerboat Challenge
Sponsor: Michigan Offshore Powerboat Racing Association
Date: 1st or 2nd weekend of September
Location: that portion of Lake Michigan from:

Latitude	*Longitude*
43°03.4′ N	086°15.3′ W (Grand Haven South Pierhead Entrance Light, LLNR 19965), thence along the breakwater and shoreline to
42°54.8′ N	086°13′ W, thence to
42°54.8′ N	086°15′ 7 W, thence to
43°03.4′ N	086°15.7′ W, thence to
43°03.4′ N	086°15.3′ W, (Grand Haven South Pierhead Entrance Light, LLNR 18965).

Group Milwaukee, WI

Chicago Air and Water Show
Sponsor: Chicago Park District
Date: 3rd or 4th weekend of August
Location: That portion of Lake Michigan from 41°55′54″ N at the shoreline, then east to a point at 41°55′54″ N 87°37′12″ W, thence southeast to a point at 41′54′ N 87°36′ W, then a line drawn southwestward to the northeast corner of the Central District Filtration Plant Breakwall, thence due west to shore.

Festa Italiana
Sponsor: The Italian Community Center
Date: 3rd weekend of July
Location: The uncharted lagoon or basin in Milwaukee Harbor north of the mouth of the Milwaukee River and directly adjacent to the Summerfest grounds, enclosed by shore on the west and a ''comma'' shaped man-made rock wall on the east. The construction of the lagoon is such that a small ''basin'' has been created with one entrance located at the northwest end, thus, there is no ''thru traffic''.

Milwaukee Summerfest
Sponsor: Milwaukee World Festival, Inc.
Date: Last week of June through 2nd weekend of July
Location: The uncharted lagoon or basin in Milwaukee Harbor north of the mouth of the Milwaukee River and directly adjacent to the Summerfest grounds, enclosed by shore on the west and a ''comma'' shaped man-made rock wall on the east. The construction of the lagoon is such that a small ''basin'' has been created with one entrance located at the northwest end, thus, there is no ''thru traffic''. Four special buoys will be set by the sponsor to delineate the entrance to the lagoon.

Racine on the Lakefront Airshow
Sponsor: Rotary Club of Racine
Date: 2nd weekend of June
Location: That portion of Racine Harbor, Lake Michigan, bounded by the following corner points:

Southeast Corner—42°41.95′ N 87°45.5′ W
Southwest Corner—42°41.95′ N 87°47.2′ W
Northwest Corner—42°45.6′ N 87°46.2′ W
Northeast Corner—42°45.6′ N 87°45.5′ W

Dated: October 23, 1995.

G.F. Woolever,

Rear Admiral, U.S. Coast Guard, Commander, Ninth Coast Guard District.

[FR Doc. 95–27105 Filed 10–31–95; 8:45 am]

BILLING CODE 4910–14–M

33 CFR Part 117

[CGD13–95–011]

Drawbridge Operation Regulations; Hood Canal, WA

AGENCY: Coast Guard, DOT.

ACTION: Notice of proposed rulemaking.

SUMMARY: At the request of the Washington State Department of Transportation (WSDOT), the Coast Guard is considering an amendment to the regulations governing the operation of the Hood Canal Bridge at Port Gamble, Washington. The proposed change would limit the width of the opening of the retractable span of the floating bridge to 300 feet of horizontal clearance unless a maximum horizontal clearance of 600 feet is specifically requested by the vessel operator.

DATES: Comments must be received on or before January 2, 1996.

ADDRESSES: Comments should be mailed to Commander (oan), Thirteenth Coast Guard District, 915 Second Avenue, Seattle, Washington 98174–1067. The comments and other materials referenced in this notice will be available for inspection and copying at 915 Second Avenue, Room 3410, Seattle, Washington. Normal office hours are between 7:45 a.m. and 4:15 p.m., Monday through Friday, except federal holidays. Comments may also be hand-delivered to this address.

FOR FURTHER INFORMATION CONTACT: John E. Mikesell, Chief, Plans and Programs Section, Aids to Navigation and Waterways Management Branch, (Telephone: (206) 220–7270).

SUPPLEMENTARY INFORMATION:

Request for Comments

The Coast Guard encourages interested persons to participate in this rulemaking by submitting written data, views, or arguments. Persons submitting comments should include their names and addresses, identify this rulemaking (CGD13–95–011) and the specific section of this proposal to which each comment applies, and give the reason for each comment. Please submit two copies of all comments and attachments in unbound format, no larger than 8½ by 11 inches, suitable for copying and electronic filing. Persons wanting acknowledgment of receipt of comments should enclose stamped, self-addressed postcards or envelopes.

The Coast Guard will consider all comments received during the comment period. It may change this proposal in view of the comments.

The Coast Guard plans no public hearing. Persons may request a public

hearing by writing to the Commander, Thirteenth Coast Guard District at the address under **ADDRESSES**. The request should include the reasons why a hearing would be beneficial. If it determines that the opportunity for oral presentations will aid this rulemaking, the Coast Guard will hold a public hearing at a time and place announced by a later notice in the Federal Register.

Drafting Information

The drafters of this notice are Austin Pratt, Project Officer, and Lieutenant Commander John C. Odell, Project Attorney, Thirteenth Coast Guard District Legal Office.

Background and Purpose

Current regulations at 33 CFR 117.5 state that, unless otherwise required, drawbridges shall be fully opened for the passage of vessels. The proposed change would allow the floating retractable span of the Hood Canal Bridge to open halfway (300 feet) for the passage of most vessels instead of the maximum (600 feet). The drawspan of the Hood Canal is extremely wide compared to the majority of drawbridges. Unlike many other drawbridges, no part of the draw mechanism is suspended above the channel when opened. Opening only to 300 feet would reduce delays to roadway traffic and would reduce energy consumption and maintenance costs. A full opening and closure without counting vessel transit time takes at least fifteen minutes. This is two or three times as long as the operation of many other drawbridges. WSDOT has observed that only one or two openings out of an average of about 32 openings per month are for vessels that need the span fully opened to pass safely. The remaining vessels can pass safely through a horizontal opening of only 300 feet. In practice, many vessels routinely pass through the bridge before the retractable span has been fully opened.

Discussion of Proposed Rule

The proposed rule would amend paragraph (a) of 33 CFR 117.1045 to state that the draw shall be opened horizontally for 300 feet unless the maximum opening of 600 feet is requested. It would not remove the one hour notice requirement nor any other aspect of the existing regulations.

Regulatory Evaluation

This proposed rule is not a significant regulatory action under 3(f) of Executive Order 12866 and does not require an assessment of potential cost and benefits under section 6(a)(3) of that order. It has been exempted from review by the Office of Management and Budget under that order. It is not significant under the regulatory policies and procedures of the Department of Transportation (DOT) (44 FR 11040; February 26, 1979). The Coast Guard expects the economic impact of this proposed rule to be so minimal that a full regulatory evaluation under paragraph 10e of the regulatory policies and procedures of DOT is unnecessary. This expectation is based on the fact that most vessels only need a 300-foot opening and that vessels needing a 600-foot opening will be able to obtain one merely by requesting it from the bridgetender on duty.

Small Entities

Under the Regulatory Flexibility Act (5 U.S.C. 601 *et seq.*), the Coast Guard must consider whether this proposal will have a significant effect on a substantial number of small entities. ''Small entities'' include independently owned and operated small businesses that are not dominant in their field and that otherwise qualify as ''small business concerns'' under section 3 of the Small Business Act (15 U.S.C. 632). The Coast Guard certifies under 5 U.S.C. 605(b) that this proposal, if adopted, will not have a significant impact on a significant number of small entities.

Collection of Information

This proposal contains no collection of information requirements under the Paperwork Reduction Act (44 U.S.C. 3501 *et seq.*).

Federalism

The Coast Guard has analyzed this proposal under the principles and criteria contained in Executive Order 12612, and it has been determined that the proposed rulemaking does not have sufficient federalism implications to warrant the preparation of a Federalism Assessment.

Environment

The Coast Guard considered the environmental impact of this proposal and concluded that, under section 2.B.2. of Commandant Instruction M16475.B, this proposal is categorically excluded from further environmental documentation. A ''Categorical Exclusion Determination'' is available in the docket for inspection or copying.

List of Subjects in 33 CFR Part 117

Bridges.

Proposed Regulations

For the reasons set out in the preamble, the Coast Guard proposes to amend part 117 of title 33, Code of Federal Regulations, as follows:

PART 117—DRAWBRIDGE OPERATION REGULATIONS

1. The authority citation for part 117 continues to read as follows:

Authority: 33 U.S.C. 499; 49 CFR 1.46; 33 CFR 1.05–1(g); section 117.255 also issued under the authority of Pub. L. 102–587, 106 Stat. 5039.

2. Paragraph (a) of § 117.1045 is revised to read as follows:

§ 117.1045 Hood Canal.

* * * * *

(a) The draw shall open on signal if at least one hour's notice is given. The draw shall be opened horizontally for 300 feet unless the maximum opening of 600 feet is requested.

* * * * *

Dated: October 17, 1995.

J.W. Lockwood,

Rear Admiral, U.S. Coast Guard, Commander, 13th Coast Guard District.

[FR Doc. 95–27106 Filed 10–31–95; 8:45 am]

BILLING CODE 4910–14–M

ENVIRONMENTAL PROTECTION AGENCY

40 CFR Parts 52 and 70

[CA163–1–7251; AD–FRL–5323–4]

Clean Air Act Proposed Approval of the Federal Operating Permits Program; California State Implementation Plan Revision; San Joaquin Valley Unified Air Pollution Control District

AGENCY: Environmental Protection Agency (EPA).

ACTION: Proposed rule.

SUMMARY: The EPA is proposing interim approval for the Federal Operating Permits Program submitted by the California Air Resources Board on behalf of the San Joaquin Valley Unified Air Pollution Control District (San Joaquin or District). This Program was submitted for the purpose of complying with Federal requirements in title V of the Clean Air Act which mandates that States develop, and submit to EPA, programs for issuing operating permits to all major stationary sources and to certain other sources. As part of San Joaquin's program, EPA is also proposing to approve Rule 2530 *Federally Enforceable Potential to Emit* under Clean Air Act sections 110 and 112(l). This rule creates federally-enforceable limits on potential to emit for sources with actual emissions less

than 50 percent of the major source thresholds.

DATE: Comments on this proposed action must be received in writing by December 1, 1995.

ADDRESSES: Comments should be addressed to Frances Wicher, Mail Code A–5–2, U.S. Environmental Protection Agency, Region IX, Air and Toxics Division, 75 Hawthorne Street, San Francisco, California 94105.

Copies of the District's submission and other supporting information used in developing the proposed interim approval including the Technical Support Document are available for inspection during normal business hours at the following location: Operating Permits Section, A–5–2, Air and Toxics Division, U.S. EPA-Region IX, 75 Hawthorne Street, San Francisco, California 94105.

FOR FURTHER INFORMATION CONTACT: Frances Wicher, (415) 744–1250, Operating Permits Section, A–5–2, Air and Toxics Division, U.S. EPA-Region IX, 75 Hawthorne Street, San Francisco, California 94105.

SUPPLEMENTARY INFORMATION:

I. Background and Purpose

A. Title V

As required under title V of the Clean Air Act as amended in 1990, EPA has promulgated rules that define the minimum elements of an approvable State operating permits program and the corresponding standards and procedures by which the EPA will approve, oversee, and withdraw approval of State operating permits programs (see 57 FR 32250 (July 21, 1992)). These rules are codified at 40 CFR part 70. Title V requires States to develop, and submit to EPA, programs for issuing operating permits to all major stationary sources and to certain other sources. EPA has also issued numerous policy documents on implementing part 70, many of which are contained in the docket for this proposal.

The Act requires that States develop and submit operating permit programs to EPA by November 15, 1993, and that EPA act to approve or disapprove each program within one year of receiving the submission. The EPA's program review occurs pursuant to section 502 of the Act and the part 70 regulations, which together outline criteria for approval or disapproval. Where a program substantially, but not fully, meets the requirements of part 70, EPA may grant the program interim approval for a period of up to two years. If EPA has not fully approved a program by two years after the November 15, 1993 date, or by the end of an interim program, it must establish and implement a Federal program.

B. Federally-Enforceable Limits on Potential to Emit

Section 502(a) of the Act requires all major sources obtain title V operating permits. To determine whether a source is major, the Act focuses not only on a source's actual emissions, but also on its potential emissions. Thus, a source that has maintained actual emissions at levels below the major source threshold could still be subject to title V permitting if it has the potential to emit (PTE) major amounts of air pollutants.

However, in situations where unrestricted operation of a source would result in a PTE above major-source levels, such sources may legally avoid permitting by taking federally-enforceable PTE limits below the applicable major source threshold. Federally-enforceable limits are enforceable by EPA or by citizens in addition to the State or Local agency. There are numerous mechanisms for creating federally-enforceable limits including prohibitory rules that are approved into the state implementation plan and, for limiting PTE for hazardous air pollutants, under section 112(l) of the Act.

II. Proposed Action and Implications

A. Analysis of State Submission

The analysis contained in this notice focuses on the major elements of San Joaquin's title V operating permit program and on the specific elements that must be corrected to meet the minimum requirements of part 70. The full program submittal, the Technical Support Document (TSD), which contains a detailed analysis of the submittal, and other relevant materials are available for inspection as part of the public docket. The docket may be viewed during regular business hours at the address listed above.

1. Title V Program Support Materials

San Joaquin's program was submitted for approval under title V and part 70 by the California Air Resources Board (CARB) on July 3 and August 17, 1995. Additional material was submitted by the District on September 6 and 21, 1995. In submitting the District's title V program, CARB requested source category-limited interim approval for the program because California law currently exempts agricultural sources from all permitting requirements including title V. The District's submission contains a complete program description, District implementing and supporting regulations, application and reporting forms, and other supporting information. In addition, CARB submitted for all Districts in the State a single Attorney General's opinion, State enabling legislation, and certain other information regarding State law.

San Joaquin's Rule 2530 Federally Enforceable Potential to Emit was submitted by CARB as a revision to the SIP and for approval under section 112(l) of the Act on October 24, 1995.

EPA reviewed the District's program to assure that it contains all the elements required by § 70.4(b) (elements of the initial program submission) and has found the program complete pursuant to § 70.4(e)(1) in a letter to the CARB on October 18, 1995. Rule 2530 was found to be complete pursuant to EPA's completeness criteria for SIP revisions that are set forth in 40 CFR Part 51 Appendix V.

2. Title V Operating Permit Regulations and Program Implementation

The rules that constitute San Joaquin's title V program are Rules 2520 Federally Mandated Operating Permits (adopted June 15, 1995), Rule 2530 Federally Enforceable Potential to Emit (adopted June 15, 1995), and elements of Rule 2201 New and Modified Stationary Source Review (amended June 15, 1995). Other District rules that were submitted in support of the District's title V program are Rules 1080 Stack Monitoring (amended December 17, 1992), 1081 Source Sampling (amended December 17, 1992), 2010 Permits Required (amended December 16, 1993), 2020 Exemptions (amended October 26, 1993), and 3010 Fees (amended July 21, 1995).[1] These rules, along with the authorities granted the District under California State law, substantially meet the requirements of §§ 70.2 (Definitions) and 70.3 (Applicability) for applicability; § 70.5(c) (Standard application form and required information) for criteria that define insignificant activities and for complete application forms; §§ 70.4(b)(12) (Section 502(b)(10) changes) and 70.6 (Permit content) for permit content including operational flexibility; § 70.7 (Permit issuance, renewal, reopenings, and revisions) for public participation, permit issuance, and permit modifications; § 70.9 (Fee

[1] EPA is only approving the portions of these Rules that are necessary to implement the District's title V program. Except for Rule 2530, this approval does not constitute approval or indicate the approvability of these rules under any other provisions of the Act or EPA regulations.

determination and certification) for fees; and § 70.11 for enforcement authority.

EPA has identified several interim approval issues affecting applicability, application content, permit content, and permit issuance and modifications procedures that must be corrected in order for the San Joaquin program to receive full approval. These interim approval issues are discussed in Section II.B.2. of this notice and detailed in the TSD. EPA has also included in the summary section of the TSD its understandings and interpretations of certain elements of the San Joaquin rule including the use of EPA's January 25, 1995 transition memorandum on limiting potential to emit; limits on EPA's objections to permits; limits on the permit shield; consolidation of overlapping applicable requirements; variances; the effective definition of title I modifications; and administrative permit amendments. A copy of this summary section may be obtained by contacting Frances Wicher at the address listed at the beginning of this notice.

3. Permit Fee Demonstration

Section 502(b)(3) of the Act requires that each permitting authority collect fees sufficient to cover all reasonable direct and indirect costs required to develop and administer its title V operating permits program. Each title V program submission must contain either a detailed demonstration of fee adequacy or a demonstration that aggregate fees collected from title V sources meet or exceed $25 per ton of emissions per year (adjusted from 1989 by the Consumer Price Index (CPI)). The $25 per ton amount is presumed, for program approval, to be sufficient to cover all reasonable program costs and is thus referred to as the ''presumptive minimum,'' (§ 70.9 (b)(2)(i)). For FY 1996, the presumptive fee level is $30.93.

San Joaquin has opted to make a presumptive minimum fee demonstration in order to show fee adequacy and meet the requirements of § 70.9 (Fee determination and certification). San Joaquin's fee schedule (Rule 3010) requires title V facilities to pay an application fee for initial permits, permit renewals, and permit modifications of $15 per unit creditable to a $46 per hour processing fee. In addition, the District charges an annual fee for permits to operate and a fee for sources applying for preconstruction permits under Rule 2201. In aggregate, title V sources in the Valley will pay a total annual fee of $32.09 per ton in 1996. This amount is over the $30.93 per ton presumptive minimum fee level for FY 1996.

4. Provisions Implementing the Requirements of Other Titles of the Act

a. Authority and Commitments for Section 112 Implementation. San Joaquin has demonstrated in its title V program submission adequate legal authority to implement and enforce all section 112 requirements through the title V permit. This legal authority is contained in the State of California enabling legislation and in regulatory provisions defining ''federally enforceable requirements'' and stating that the permit must incorporate conditions and terms to ensure compliance with all applicable requirements. EPA has determined that this legal authority is sufficient to allow San Joaquin to issue permits that assure compliance with all section 112 requirements.

b. Authority for Title IV (Acid Rain) Implementation. San Joaquin's title V program contains minimal elements of an acid rain program; however, the District has committed to adopt all missing elements of an acid rain program as soon as possible. At this time, EPA does not believe that there are any phase II acid rain sources in the Valley, therefore, the District's commitment to adopt an acid rain program expeditiously should ensure appropriate regulatory authority exists to issue a timely title IV permit to any new or existing source in the District that becomes subject to, or wants to opt into, the acid rain program.

B. Proposed Action

1. Title V Operating Permits Program

The EPA is proposing to grant interim approval to the operating permit program for the San Joaquin Valley Unified APCD submitted on July 3 and August 17, 1995, and supplemented on September 6 and 21, 1995. If EPA finalizes this proposed interim approval, it will extend for two years following the effective date of final interim approval and cannot be renewed. During the interim approval period, San Joaquin will be protected from sanctions, and EPA is not obligated to promulgate, administer and enforce a federal permits program for the District. Permits issued under a program with interim approval have full standing with respect to part 70, and the one-year time period for submittal of permit applications by subject sources begins upon the effective date of interim approval, as does the three-year time period for processing the initial permit applications.

Following final interim approval, if the District fails to submit a complete corrective program by the date six months before expiration of the interim approval, the District will be subject to a sanction clock or potentially subject to sanctions under section 502(d)(2) of the Act. If EPA has not granted full approval to the District's title V program by the end of the interim period, then the District will be subject to a federally-imposed operating permits program.

2. Interim Approval Issues for San Joaquin's Title V Operating Permits Program

If EPA finalizes this interim approval, San Joaquin must make the following changes, or changes that have the same effect, to receive full approval:

(1) Revise the applicability language in Rule 2520 2.2 and the definitions of Major Air Toxics Source (Rule 2520 3.18) and Major Source (Rule 2520 3.19) to be consistent with the Act and part 70 to cover sources that emit at major source levels. Currently, these sections of Rule 2520 define major source solely on a source's potential to emit; however, both the Act and part 70 define a major source as a source that emits or has the potential to emit at major source levels. These revisions to Rule 2520 will assure sources whose potential to emit is less than major source levels but whose actual emissions are at major source levels because of non-compliance with or ineffective limits on potential to emit are subject to permitting under Rule 2520.

(2) Limit the exemption for non-major sources in Rule 2520 4.1 so that it does not exempt non-major sources for which EPA determines, upon promulgation of a section 111 or 112 standard, must obtain title V permits.

(3) Either revise the definition of ''stationary source'' in Rule 2201 3.29 so that the exception to the Major SIC Group requirement for oil and gas production sources in Rule 2201 3.29.4 does not apply for determining the applicability of Rule 2520 or demonstrate that the definition is as stringent as part 70.

Rule 2201 3.29.4 is a provision applicable to any facility located totally within the Western or Central Kern County Oil Fields or the Fresno County Oil Fields that is used for the production of light oil, heavy oil or gas. This provision states that all sources under common control or ownership within each field shall be considered a single stationary source even if they are located on non-contiguous or adjacent properties. However, the section also states that light oil production, heavy oil production, and gas production shall

constitute separate stationary sources. While the former provision is more stringent that part 70, the latter provision is not. Part 70's definition of ''major source'' requires aggregating all emission points under common control or ownership that are on contiguous or adjacent properties and belong to the same Major Group as described in the Standard Industrial Classification (SIC) Manual. See § 70.2 ''Major source.'' Light oil production, heavy oil production and gas production are all in the same Major Group. It is unclear whether or not San Joaquin's program would require permitting of the same emission units as part 70. If the District can make this demonstrate then EPA proposes not to require any revision to Rule 2201 3.29 as it applies to applicability determinations under Rule 2520.

While § 70.2 ''Major source'' (1)(i) does not require emissions from any oil or gas exploration or production well be aggregated with emissions from other such units in determining whether such units are a major source, this allowance is limited to determining HAPs major source status. Emissions of other regulated pollutants must be aggregated within the stationary source for determining major source status.

(4) Revise Rule 2520 7.1.3.2 to eliminate the requirement that fugitive emission estimates need only be submitted in the application if the source is in a source category identified in the major source definition in 40 CFR part 70.2. Fugitive emissions need only be counted to determine the applicability of part 70 if a source is in a source category listed in the § 70.2. major source definition. However, once applicability is determined, all sources must submit information on fugitive emissions in their applications to the extent the information is required by part 70. See § 70.3(d).

(5) Revise Rule 2520 to provide that unless the District requests additional information or otherwise notifies the applicant of incompleteness within 60 days of receipt of an application, the application shall be deemed complete. See §§ 70.5(a)(2) and 70.7(a)(4).

(6) Revise Rule 2520 sections 11.1.4.2 and 11.3.1.1 and Rule 2201 5.3.1.1.1 to include notice ''by other means if necessary to assure adequate notice to the affected public.'' See § 70.7(h)(1).

(7) Revise Rule 2520's permit issuance procedures to provide for notifying EPA and affected states in writing of any refusal by the District to accept all recommendations for the proposed permit that an affected state submitted during the public/affected state review period. See § 70.8(b)(2).

(8) Either delete section 11.7.5 in Rule 2520 and section 5.3.1.8.5 in Rule 2201, which purport to limit the grounds upon which EPA may object to a permit to compliance with applicable requirements, or revise them to be fully consistent with § 70.8(c).

Rule 2520 11.7.5 and Rule 2201 5.3.1.8.5 purport to limit the grounds on which EPA may object to a permit to compliance with applicable requirements. Section 70.8(c)(1) provides that EPA will object to the issuance of any proposed permit that is not ''in compliance with applicable requirements or requirements under this part [part 70].'' (emphasis added). EPA's authority to object to issuance of permits derives from section 505(b) of the Act. No state or local agency may restrict authorities granted EPA under the Clean Air Act; therefore, EPA views section 11.7.5 of Rule 2520 and Section 5.3.1.8.5 of Rule 2201 as not binding upon its actions. EPA will exercise its authority to object to permits consistent with § 70.8(c) and without regard to the restriction on that authority in San Joaquin's title V program. Should the District issue a permit to which EPA has objected and the District has not revised or reissued to meet the objection, EPA will consider the permit invalid and will require the District to revise and reissue the proposed permit or will revoke, revise, and reissue the permit itself. EPA has made these revisions to Rule 2520 an interim approval issue in order to clarify its authority.

(9) Revise Rule 2520 2.4 to clarify that the sentence in section 2.4 that ''[o]nly the affected emissions units within the stationary source shall be subject to part 70 permitting requirements'' applies only to stationary sources that are also area sources. Rule 2520 2.4 requires any emission unit, including an area source subject to a standard or other requirement promulgated pursuant to section 111 or 112 of the CAA published after July 21, 1992, to obtain a part 70 permit but also states that only the affected emissions unit within a stationary source shall be subject to the part 70 permitting requirements. Section 70.3(c) requires all emission units subject to any applicable requirement at major sources be included in a part 70 permit. Only at non-major sources does part 70 allow the permit to cover only the units causing the source to be subject to part 70.

(9) Revise Rule 2520 8.1 to provide that model general permits and model general permit templates will have a permit term not to exceed 5 years instead of being valid until revoked, suspended, or modified. During the interim approval period, EPA recommends that the District issue all model general permits and model general permit templates with a permit term not to exceed 5 years to avoid having to reopen all model general permits and model general permit templates issued during the interim approval period to incorporate the correct permit term.

(10) Revise Rule 2520 8.1 to provide that any permit for a solid waste incineration unit that has a permit term of more than 5 years shall be subject to review, including public notice and comment, at least every 5 years. See § 70.6(a)(2).

(11) Revise Rule 2520 13.2.3 to state that the permit shield will apply only to requirements addressed in the permit. Rule 2520 13.2.3 currently extends the permit shield to requirements addressed by the District in written application reviews. Section 504(f) of the Act and § 70.6 (f) are both clear that the permit shield may only extend to requirements that are addressed in the permit. EPA will not consider a source shielded from an enforcement action for failure to comply with an applicable requirement if that applicable requirement is addressed only in the written reviews supporting permit issuance and not in the permit. Further, EPA will veto any permit that extends the permit shield to conditions, terms, or findings of non-applicability that are not included in the permit.

(12) Revise Rule 2520 9.12 to require the permit to contain terms and conditions for the trading of emission increases and decreases in the permitted facility to the extent that *any* applicable requirement provides for such trading without case by case approval. Rule 2520 9.12 currently restricts permit terms and conditions to trades allowed under the District's new source review rule, Rule 2201. See § 70.6 (a)(10).

(13) Revise Rule 2520, Section 9.0 (permit content) to include the § 70.6 (c)(3) requirement for schedules of compliance for applicable requirements for which the source is in compliance or that will become effective during the permit term. Section 70.6(c)(3), reflecting the language of Clean Air Act section 504(a) (''Each permit issued * * * shall include * * * a schedule of compliance* * * .''), requires that the permit contain a schedule of compliance even when the source is in compliance with all applicable requirements. Rule 2520 9.15 only requires a schedule of compliance when the source is in violation of any applicable requirement. During the interim period, the District should incorporate schedules of compliance, as

required by § 70.6(c)(3), into all issued permits.

(14) Revise Rule 2520 to treat changes made under the prevention of significant deterioration (PSD) provisions of the Act and EPA' PSD regulations in the same manner as ''title I modifications'' as that term is defined in Rule 2520 and Rule 2201. PSD modifications are considered ''modifications under title I'' in part 70.

(15) Revise Rule 2520 to state that, notwithstanding the permit shield provisions, if a source that is operating under a general permit is later determined not to qualify for the terms and conditions of that general permit, then the source is subject to enforcement action for operation without a part 70 permit. See § 70.6(d).

(16) Because California State law currently exempts agricultural production sources from permit requirements, CARB has requested source category-limited interim approval for all California districts. EPA is proposing to grant source category-limited interim approval to the San Joaquin program. In order for this program to receive full approval, the Health and Safety Code must be revised to eliminate the exemption of agricultural production sources from the requirement to obtain a title V permit. Once the California statute has revised, the District must also revise its permit exemption rules to eliminate any blanket exemption granted agricultural sources.

3. District Program Implementing Section 112(g)

The EPA has published an interpretive notice in the Federal Register regarding section 112(g) of the Act (60 FR 8333; February 14, 1995). The revised interpretation postpones the effective date of section 112(g) until after EPA has promulgated a rule addressing that provision. The interpretive notice explains that EPA is considering whether the effective date of section 112(g) should be delayed beyond the date of promulgation of the federal rule so as to allow States time to adopt rules implementing the federal rule, and that EPA will provide for any such additional delay in the final section 112(g) rulemaking. Unless and until EPA provides for such an additional postponement of section 112(g), San Joaquin must be able to implement section 112(g) during the period between promulgation of the federal section 112(g) rule and adoption of implementing District regulations.

For this reason, EPA is proposing to approve the use of San Joaquin's preconstruction review program (Rule 2201) as a mechanism to implement section 112(g) during the transition period between promulgation of the section 112(g) rule and adoption by San Joaquin of rules specifically designed to implement section 112(g). However, since the sole purpose of this approval is to confirm that the District has a mechanism to implement section 112(g) during the transition period, the approval itself will be without effect if EPA decides in the final section 112(g) rule that there will be no transition period. The EPA is limiting the duration of this proposed approval to 12 months following promulgation by EPA of the section 112(g) rule.

4. Program for Delegation of Section 112 Standards as Promulgated

Requirements for approval, specified in 40 CFR 70.4(b), encompass section 112(l)(5) requirements for approval of a program for delegation of section 112 standards as promulgated by EPA as they apply to part 70 sources. Section 112(l)(5) requires that the state program contain adequate authorities, adequate resources for implementation, and an expeditious compliance schedule, which are also requirements under part 70. Therefore, EPA is proposing to grant approval under section 112(l)(5) and 40 CFR part 63.91 of San Joaquin's program for receiving delegation of section 112 standards that are unchanged from federal standards as promulgated. California Health and Safety Code section 39658 provides for automatic adoption by CARB of section 112 standards upon promulgation by EPA. Section 39666 of the Health and Safety Code requires that districts then implement and enforce these standards. Thus, when section 112 standards are automatically adopted pursuant to section 39658, San Joaquin will have the authority necessary to accept delegation of these standards without further regulatory action by the District. The details of this mechanism and the means for finalizing delegation of standards will be set forth in a Memorandum of Agreement between San Joaquin and EPA, expected to be completed prior to approval of the District's section 112(l) program for delegation of unchanged federal standards. This program applies to both existing and future standards but is limited to sources covered by the part 70 program.

5. Proposed Approval of Rule 2530 Federally Enforceable Potential To Emit

On October 24, 1995, CARB submitted for approval into the San Joaquin Valley's portion of the California State Implementation Plan (SIP), Rule 2530 Federally Enforceable Potential to Emit. This Rule creates a streamlined process for limiting the potential to emit of sources that emit less that 50 percent of major source levels but whose potential to emit is above those levels. Sources complying with this Rule will have federally-enforceable limits on their potential to emit and will avoid being subject to title V.

The basic requirement for approving into the SIP rules to limit potential to emit is that the limits in the rule are practically enforceable. For a discussion of general principle of practical enforceability, see Memorandum from John Seitz to Regional Air Directors ''Options for Limiting the Potential to Emit (PTE) of a Stationary Source Under Section 112 and Title V of the Clean Air Act (Act),'' January 25, 1995, found in the docket for this rulemaking. Rule 2530 meets these requirements for practical enforceability for limiting potential to emit through general prohibitory rules in SIPs. Please refer to the TSD for further analysis of the Rule.

CARB also submitted Rule 2520 for approval under section 112(l) of the Act. The separate request for approval under section 112(l) is necessary because the proposed SIP approval discussed above only provides a mechanism for controlling criteria pollutants. EPA has determined that the practical enforceability criterion for SIPs is also appropriate for evaluating and approving Rule 2530 under section 112(l). In addition, Rule 2530 must meet the statutory criteria for approval under section 112(l)(5). For a discussion of EPA's authority to approve rules under section 112 (l), see 59 FR 60944 (November 29, 1994).

EPA proposes approval of Rule 2530 under 112(l) because the Rule meets all of the approval criteria specified in section 112(l)(5) of the Act. EPA believes Rule 2530 contains adequate authority to assure compliance with section 112 requirements because it does not waive any section 112 requirements applicable to non-major sources. Regarding adequate resources, Rule 2530 is a supporting element of the District's title V program which has demonstrated adequate funding. Furthermore, EPA believes that Rule 2530 provides for an expeditious schedule for assuring compliance because it provides a streamlined approval that allows sources to establish limits on potential to emit and avoid being subject to a federal Clean Air Act requirement applicable on a particular date. Finally, Rule 2530 is consistent with the objectives of the section 112 program because its purpose is to enable sources to obtain federally enforceable

limits on potential to emit to avoid major source classification under section 112. The EPA believes this purpose is consistent with the overall intent of section 112.

Rule 2530 is modeled on the California model prohibitory rule developed by the California Association of Air Pollution Control Officers, CARB, and EPA. In its agreement on the model rule, EPA expressed certain understandings and caveats. See letter, Lydia Wegman, Deputy Director, Office of Air Quality Planning and Standards, U.S. EPA to Peter D. Venturini, Chief, Stationary Source Division, CARB, January 11, 1995. A copy of this letter is in the docket for this rulemaking. These understandings and caveats are incorporated into EPA's proposed approval of Rule 2530.

III. Administrative Requirements

A. Request for Public Comments

The EPA is requesting comments on all aspects of this proposed interim approval. Comments should be submitted by December 1, 1995. Copies of the District's submittal and other information relied upon for the proposed interim approval are contained in a docket maintained at the EPA Regional Office.

B. Executive Order 12866

The Office of Management and Budget has exempted this action from Executive Order 12866 review.

C. Regulatory Flexibility Act

The EPA's actions under Section 502 of the Act do not create any new requirements, but simply address operating permits programs submitted to satisfy the requirements of 40 CFR part 70. Because this action does not impose any new requirements, it does not have a significant impact on a substantial number of small entities.

D. Unfunded Mandates Act

Under Section 202 of the Unfunded Mandates Reform Act of 1995 (''Unfunded Mandates Act''), signed into law on March 22, 1995, EPA must prepare a budgetary impact statement to accompany any proposed or final rule that includes a federal mandate that may result in estimated costs to State, local, or tribal governments in the aggregate; or to the private sector, of $100 million or more. Under Section 205, EPA must select the most cost-effective and least burdensome alternative that achieves the objectives of the rule and is consistent with statutory requirements. Section 203 requires EPA to establish a plan for informing and advising any small governments that may be significantly or uniquely impacted by the rule.

EPA has determined that the proposed approval action promulgated today does not include a federal mandate that may result in estimated costs of $100 million or more to either State, local, or tribal governments in the aggregate, or to the private sector. This federal action approves pre-existing requirements under State or local law, and imposes no new federal requirements. Accordingly, no additional costs to State, local, or tribal governments, or to the private sector, result from this action.

List of Subjects

40 CFR Part 52

Environmental protection, Air pollution control, Carbon monoxide, Hydrocarbons, Incorporation by reference, Intergovernmental relations, Lead, Nitrogen dioxide, Ozone, Particulate matter, Sulfur oxides, Volatile organic compounds.

40 CFR Part 70

Administrative practice and procedure, Air pollution control, Environmental protection Hazardous substances, Intergovernmental relations, Operating permits, and Reporting and recordkeeping requirements.

Authority: 42 U.S.C. 7401–7671q.

Dated: October 19, 1995.

John Wise,

Acting Regional Administrator.

[FR Doc. 95–27144 Filed 10–31–95; 8:45 am]

BILLING CODE 6560–50–P

---

40 CFR Part 86

[AMS–FRL–5302–3]

RIN 2060–AC65

Control of Air Pollution From New Motor Vehicles and New Motor Vehicle Engines: Regulations Requiring On-Board Diagnostic (OBD) Systems—Acceptance of Revised California OBD II Requirements

AGENCY: Environmental Protection Agency (EPA).

ACTION: Notice of proposed rulemaking.

SUMMARY: This notice of proposed rulemaking proposes to revise requirements associated with on-board diagnostic (OBD) systems, as specified by 40 CFR 86.094–17. The federal OBD rulemaking, published February 19, 1993, allowed for compliance with California OBD II requirements as satisfying federal OBD requirements through the 1998 model year. The California Air Resources Board has recently revised their OBD II requirements. The federal OBD regulations require appropriate revisions such that compliance with the recently revised OBD II requirements will satisfy federal OBD.

DATES: Written comments on this document will be accepted until January 16, 1996. EPA will conduct a public hearing on this Notice of Proposed Rulemaking on December 13, 1995, if a public hearing is requested by November 16, 1995. If a hearing is requested, it will convene at 9 a.m. and will adjourn at such time as necessary to complete the testimony. Further information on the public hearing can be found in Supplementary Information, Section III, Public Participation.

ADDRESSES: Written comments should be submitted (in duplicate if possible) to: The Air Docket, room M–1500 (Mail Code 6102), Waterside Mall, Attention: Docket No. A–90–35, 401 M Street, SW., Washington, DC 20460.

The public hearing, if requested, will be held at the Holiday Inn North Campus, 3600 Plymouth Road, Ann Arbor, MI. Parties wishing to testify at the hearing should provide written notice to the contact person (see **FOR FURTHER INFORMATION CONTACT**).

Materials relevant to this rulemaking are contained in Docket No. A–90–35, and are available for public inspection and photocopying between 8:00 a.m. and 5:30 p.m. Monday through Friday. The telephone number is (202) 260–7548 and the facsimile number is (202) 260–4400. A reasonable fee may be charged by EPA for copying docket material.

FOR FURTHER INFORMATION CONTACT: Todd Sherwood, U.S. Environmental Protection Agency, 2565 Plymouth Road, Ann Arbor, MI 48105, telephone (313) 668–4405.

SUPPLEMENTARY INFORMATION:

Table of Contents

I. Introduction and Background
II. Requirements of this Proposal
III. Public Participation
IV. Discussion of Issues
V. Cost Effectiveness
VI. Administrative Requirements

I. Introduction and Background

On February 19, 1993, the EPA promulgated a final rulemaking (58 FR 9468, February 19, 1993) requiring manufacturers of light-duty vehicles (LDV) and light-duty trucks (LDT) to install on-board emission control diagnostics (OBD) systems on such vehicles beginning in model year 1994. The regulations promulgated in that final rulemaking require that

manufacturers install OBD systems which monitor emission control components for any malfunction or deterioration causing exceedances of certain emission thresholds, and alert the vehicle operator to the need for repair. That rulemaking also requires that, when a malfunction occurs, diagnostic information must be stored in the vehicle's computer to assist the mechanic in diagnosis and repair.

Additionally, that rulemaking makes an allowance for manufacturers to satisfy the Federal OBD requirements through the 1998 model year by installing systems satisfying the California OBD II requirements pertaining to those model years. This allowance means that manufacturers could concentrate on designing one system for OBD compliance and installing that system nationwide during allowable model years. As EPA regulations cannot be revised except through EPA rulemaking, the OBD II requirements allowed under this provision were, and have continued to be, those existing on the date of publication of the federal OBD final rulemaking. This means that subsequent changes made to the OBD II requirements by the California Air Resources Board (ARB) may be inconsistent and potentially unacceptable for federal OBD compliance. The provisions of this proposed rulemaking will allow manufacturers to comply with federal OBD requirements by optionally complying with more recent OBD II regulations, specifically those contained in ARB Mail Out #95–03, made publicly available January 19, 1995.

On March 23, 1995, EPA published a direct final rule revising specific federal OBD provisions, including the provision of today's proposal. EPA believed that the March 23 direct final rule would not be controversial. In that direct final rule, EPA stated that, ''If notice is received that any person or persons wish to submit adverse comments regarding some, but not all of the actions taken in this rulemaking, then EPA shall withdraw this final action and publish a proposal only with regard to the actions for which notice has been received.'' EPA stated that it would make such a withdrawal if adverse comment was received by April 24, 1995.

EPA received adverse comment from the Motor and Equipment Manufacturers Association (MEMA). This adverse comment was been placed in the public docket for viewing. The comments submitted by MEMA were adverse with regard to the revision of 40 CFR 86.094–17(j) that would allow manufacturers the option of complying with the recently revised California OBD II requirements (California Air Resources Board Mail-Out #95–03). (MEMA had initially objected to other specific provisions of the direct final rule, but MEMA withdrew these objections in a letter signed May 18, 1995.) Therefore, EPA subsequently removed the provision of the March 23 direct final rule that pertained to optional compliance with the revised OBD II requirements of ARB Mail-Out #95–03 (Final rule published on July 25, 1995 at 60 FR 37945). The language of the prior final rule published on February 19, 1993 (58 FR 9468) allowing compliance with California OBD II requirements is reinstated in § 86.094–17(j).

II. Requirements of This Proposal

This proposed rulemaking allows manufacturers to comply with federal OBD requirements by optionally complying with the revised and recently adopted California OBD II regulations. The allowance for optional compliance with California OBD II has already been established in the federal OBD program and was incorporated into the federal OBD final rulemaking in February, 1993. However, since that time, the ARB has made several revisions to the OBD II regulations.

Because the Agency cannot simply accept the revised OBD II without undergoing the federal regulatory process, any optional compliance with California OBD II under the current federal regulations must be done against the OBD II regulations as they existed in February, 1993 (ARB Mail Out #92–56, November, 1992). However, the ARB has determined that several manufacturers would have difficulty complying with the OBD II regulations as they existed in February, 1993. The most notable requirements that currently pose difficulties are those for engine misfire detection under all positive torque engine speeds and conditions and full OBD II implementation on alternative fueled vehicles. Additionally, most manufacturers have indicated difficulty meeting other aspects of the OBD II regulations due to, for example, the complexity of the computer software requirements, and unpredictable driver actions such as resting a foot on the gas pedal while stopped at a traffic light. It is these additional difficulties that have prompted ARB to provide a ''deficiency'' allowance in their revised OBD II regulations whereby manufacturers can certify as OBD II compliant despite some reasonably acceptable and unplanned deficiency in the OBD system.

As a result of the ARB revisions to OBD II, and to remain consistent with the original intent of providing for optional compliance with OBD II for federal OBD purposes, and because EPA has determined that OBD systems complying with the revised OBD II requirements fully satisfy the intent of the 1990 Clean Air Act Amendments and federal OBD regulations, this proposed rulemaking will provide the same option but will require that manufacturers choosing this option comply with the more recent OBD II regulations contained in ARB Mail Out #95–03.

This means that any federal vehicles complying with federal OBD by optionally complying with California OBD II are allowed the same deficiencies as allowed under the OBD II provisions. This is consistent with revisions deemed necessary by EPA and subsequently made to federal OBD requirements through a direct final rulemaking published in March of this year (60 FR 15242, March 23, 1995). Note, however, that a manufacturer requesting certification of a deficient OBD II system must receive EPA acceptance of any deficiency independently of an acceptance made by ARB. The Agency will use the same criteria specified by the ARB in the OBD II regulation,[1] with the exception of providing deficiency allowances for lack of catalyst monitors or oxygen sensor monitors as the Clean Air Act specifically requires these monitors no later than the 1996 model year. The Agency will make every effort to determine the acceptability of OBD II deficiency requests in concert with ARB staff to avoid the potential for conflicting determinations. However, the extent to which the agencies can make concurrent and coordinated findings will rely heavily on the manufacturer, who will be expected to provide any necessary information to both agencies in parallel rather than pursuing deficiency determinations on a separate basis.

III. Public Participation

A. Comments and the Public Docket

The Agency welcomes comments on all aspects of this proposed rulemaking. All comments, with the exception of

[1] Those criteria being the extent to which the requirements are satisfied overall on the vehicle applications in question, the extent to which the resultant diagnostic system design will be more effective than earlier OBD systems, and a demonstrated good-faith effort to meet the requirements in full by evaluating and considering the best available monitoring technology.

proprietary information, should be directed to the EPA Air Docket Section, Docket No. A–90–35 (see **ADDRESSES**). Commenters who wish to submit proprietary information for consideration should clearly separate such information from other comments by:

- Labeling proprietary information ''Confidential Business Information'' and
- Sending proprietary information directly to the contact person listed (see **FOR FURTHER INFORMATION CONTACT**) and not to the public docket.

This will help insure that proprietary information is not inadvertently placed in the docket. If a commenter wants EPA to use a submission labeled as confidential business information as part of the basis for the final rule, then a nonconfidential version of the document, which summarizes the key data or information, should be sent to the docket.

Information covered by a claim of confidentiality will be disclosed by EPA only to the extent allowed and by the procedures set forth in 40 CFR Part 2. If no claim of confidentiality accompanies the submission when it is received by EPA, the submission may be made available to the public without notifying the commenters.

B. Public Hearing

EPA will conduct a public hearing on this notice of proposed rulemaking on December 13, 1995, if a public hearing is requested by November 16, 1995. If a hearing is requested, it will convene at 9 a.m. and will adjourn at such time as necessary to complete the testimony. If requested the public hearing will be held at the Holiday Inn North Campus, 3600 Plymouth Road, Ann Arbor, MI.

Should a public hearing be requested and subsequently held, anyone wishing to present testimony about this proposal at that public hearing should, if possible, notify the contact person (see **FOR FURTHER INFORMATION CONTACT**) at least seven days prior to the day of the hearing. The contact person should be given an estimate of the time required for the presentation of testimony and notification of any need for audio/visual equipment. A sign-up sheet will be available at the registration table the morning of the hearing for scheduling those who have not notified the contact earlier. This testimony will be scheduled on a first-come, first-served basis, and will follow the testimony that is arranged in advance.

The Agency recommends that approximately 50 copies of the statement or material to be presented be brought to the hearing for distribution to the audience. In addition, EPA would find it helpful to receive an advance copy of any statement or material to be presented at the hearing at least one week before the scheduled hearing date. This is to give EPA staff adequate time to review such material before the hearing. Such advance copies should be submitted to the contact person listed.

The official records of the hearing will be kept open for 30 days following the hearing to allow submissions of rebuttal and supplementary testimony. All such submittals should be directed to the Air Docket, Docket No. A–90–35 (see **ADDRESSES**).

The hearing will be conducted informally, and technical rules of evidence will not apply. Written transcripts of the hearing will be made and a copy thereof placed in the docket. Anyone desiring to purchase a copy of the transcript should make individual arrangements with the court reporter recording the proceeding.

IV. Discussion of Issues

As noted above, EPA published a direct final rulemaking on March 23, 1995, that contained a provision for optional compliance with revised California OBD II regulations as satisfying federal OBD through the 1998 model year. That provision was to become effective on May 22, 1995, unless EPA received notice of adverse comments by April 24, 1995. EPA received adverse comment from one source, the Motor and Equipment Manufacturers Association (MEMA), dated April 21, 1995. MEMA had commented adversely on all but one provision contained in the direct final rulemaking (sections II.A. through II.G.). The only provision not commented on by MEMA was that provision deleting the federal OBD anti-tampering requirements (40 CFR 86.094–18). In subsequent discussions, MEMA agreed to withdraw all of their adverse comments, with the exception of that comment pertaining to federal acceptance of compliant revised California OBD II systems as satisfying federal OBD requirements. As a result, EPA has removed the provision allowing revised OBD II systems for federal OBD compliance.

The comments received from MEMA regarding federal acceptance of compliant revised California OBD II systems as satisfying federal OBD requirements can be categorized into three areas: (1) Delegation of federal regulatory authority to the State of California; (2) Lack of an OBD II waiver under Section 209 of the Clean Air Act (CAA); and, (3) OBD II violates Section 202(m)(4) and 202(m)(5) of the CAA. These will be addressed in order.

In their comments, MEMA states an objection to , ''* * * EPA's use of the rule to unlawfully delegate federal rulemaking authority to the California Air Resources Board (''CARB'').'' The basis of this comment is unclear. The Agency has determined that the California OBD II regulation adequately encompass all requirements of the CAA section 202(m)(1), 202(m)(2), and 202(m)(4), and the regulatory intent of EPA's federal OBD final rulemaking of February, 1993. In light of that determination, the Agency has determined that it is beneficial to the automobile industry, and it presents no loss of federal OBD program benefits, to allow for optional compliance with California OBD II regulations as satisfying federal OBD for the initial years of OBD implementation. This issue was considered at length during development of the federal OBD final rulemaking and was included in the CFR through that rulemaking. In the March, 1995, direct final rulemaking, EPA simply revised that regulatory provision to include recent revisions made to the OBD II regulations that EPA had determined were necessary. In fact, EPA made revisions to its own regulations providing measures of relief similar to those contained in the revised OBD II regulations.

It should also be pointed out that EPA makes determinations of regulatory compliance, whether that compliance is done against California OBD II or specific federal OBD provisions, in conjunction with but independently from the California Air Resources Board. The ARB does not have the authority to implement federal regulations, nor the authority to make certification decisions. Therefore, EPA is making all implementation and certification decisions on vehicles produced for sale outside the State of California.

If ARB makes any further changes to the OBD II regulations, such changes will not automatically apply for federal certification purposes. EPA will once again evaluate such revisions to determine whether they are appropriate and will again provide for notice and comment rulemaking to assure that the public can provide its input.

Another MEMA comment stated that EPA had not yet granted a CAA Section 209 waiver to California for their OBD II program. MEMA argues that the lack of such a waiver precludes EPA from accepting OBD II systems for federal OBD compliance. However, the Agency's regulatory provisions state that an OBD system meeting the requirements of the OBD II regulations

effectively complies with federal OBD regulations. California's OBD II program is in this case similar to any other set of procedures that EPA incorporates by reference, for example, protocols developed by the Society of Automotive Engineers (SAE). These protocols are generally unenforceable by themselves, but are enforceable by EPA once they are promulgated by rulemaking. The existence of a waiver to California for their OBD II program is immaterial to this optional provision under federal OBD. Even if the State of California were to discontinue their OBD II program, the Agency could continue to allow optional compliance against the ARB OBD II regulations.

MEMA also argues that OBD II, and federal OBD by allowing compliance against the OBD II provisions, violates Sections 202(m)(4) and 202(m)(5) of the CAA. Section 202(m)(4) requires standardization of diagnostic connectors, OBD system access, and OBD data output, while 202(m)(5) requires that service information be made available to interested parties. This comment seems to be directed to the anti-tampering provisions of the OBD II requirements. Even if EPA believed that such requirements violated section 202(m)(4) and 202(m)(5), such requirements have expressly been excluded from EPA's incorporation of OBD II. Thus, such arguments are inapplicable. Moreover, all manufacturers will be required to comply with EPA's Service Information Availability regulations (final rule published on August 9, 1995 at 60 FR 40474).

V. Cost Effectiveness

This proposed rulemaking alters an existing provision by allowing optional compliance with the most recent California OBD II requirements, as opposed to the November, 1992, ''Original'' OBD II requirements, for the purposes of federal OBD compliance. Because this proposed rulemaking alters an existing provision, there are no costs associated with this specific proposed action. The costs and emission reductions associated with the federal OBD program were developed for the February, 19, 1993, final rulemaking. The proposed change being made today does not affect the costs and emission reductions published as part of that rulemaking.

VI. Administrative Requirements

A. Administrative Designation

Under Executive Order 12866, (58 FR 51735 (October 4, 1993)) the Agency must determine whether the regulatory action is ''significant'' and therefore subject to OMB review and the requirements of the Executive Order. The Order defines ''significant regulatory action'' as one that is likely to result in a rule that may:

(1) Have an annual effect on the economy of $100 million or more or adversely affect in a material way the economy, a sector of the economy, productivity, competition, jobs, the environment, public health or safety, or State, local, or tribal governments or communities;

(2) Create a serious inconsistency or otherwise interfere with an action taken or planned by another agency;

(3) Materially alter the budgetary impact of entitlements, grants, user fees, or loan programs or the rights and obligations of recipients thereof; or,

(4) Raise novel legal or policy issues arising out of legal mandates, the President's priorities, or the principles set forth in the Executive Order.

It has been determined that this rule is not a ''significant regulatory action'' under the terms of Executive Order 12866 and is therefore not subject to OMB review.

B. Reporting and Recordkeeping Requirements

This proposed rulemaking does not change the information collection requirements submitted to and approved by OMB in association with the OBD final rulemaking (58 FR 9468, February 19, 1993; and, 59 FR 38372, July 28, 1994).

C. Impact on Small Entities

The Regulatory Flexibility Act of 1980 requires Federal agencies to identify potentially adverse impacts of federal regulations upon small entities. This proposed rulemaking will provide regulatory relief to both large and small volume automobile manufacturers by maintaining consistency with California OBD II requirements. This proposed rulemaking will have no impact on businesses which manufacture, rebuild, distribute, or sell automotive parts, nor those involved in automotive service and repair.

Therefore, as required under section 605 of the Regulatory Flexibility Act, 5 U.S.C. 601 *et seq.*, I certify that this regulation does not have a significant impact on a substantial number of small entities.

D. Unfunded Mandates Act

Under Section 202 of the Unfunded Mandates Reform Act of 1995 (''Unfunded Mandates Act''), signed into law on March 22, 1995, EPA must prepare a budgetary impact statement to accompany any proposed or final rule that includes a Federal mandate that may result in estimated costs to State, local, or tribal governments in the aggregate; or to the private sector, or $100 million or more. Under Section 205, EPA must select the most cost effective and least burdensome alternative that achieves the objectives of the rule and is consistent with statutory requirements. Section 203 requires EPA to establish a plan for informing and advising any small governments that may be significantly or uniquely impacted by the rule.

EPA has determined that the proposed approval action promulgated today does not include a Federal mandate that may result in estimated costs of $100 million or more to either State, local, or tribal governments in the aggregate, or to the private sector.

E. Electronic Copies of Rulemaking Documents

Electronic copies of the preamble and the regulatory text of this proposed rulemaking are available on the Office of Air Quality Planning and Standards (OAQPS) Technology Transfer Network Bulletin Board System (TTN BBS). Users are able to access and download TTN BBS files on their first call. After logging onto TTN BBS, to navigate through the BBS to the files of interest, the user must enter the appropriate command at each of a series of menus. The steps required to access information on this rulemaking are listed below. The service is free, except for the cost of the phone call.

TTN BBS: 919–541–5742 (1,200–14,400 bps, no parity, eight data bits, one stop bit). Voice help: 919–541–5384 Internet address: TELNET ttnbbs.rtpnc.epa.gov Off-line: Mondays from 8–12 Noon ET.

1. Technology Transfer Network Top Menu: <T> GATEWAY TO TTN TECHNICAL AREAS (Bulletin Boards) (Command: T)

2. TTN TECHNICAL INFORMATION AREAS: <M> OMS—Mobile Sources Information (Command: M)

3. OMS BBS === MAIN MENU FILE TRANSFERS: <K> Rulemaking & Reporting (Command: K)

4. RULEMAKING PACKAGES: <7> Inspection and Maintenance (Command: 7)

5. Inspection and Maintenance Rulemaking Areas: File area #2 On-Board Diagnostics (Command: 2)

At this stage, the system will list all available FTP Review files. To download a file, select a transfer protocol which will match the terminal software on your computer, then set your own software to receive the file using that same protocol.

If unfamiliar with handling compressed (i.e., ZIP'd) files, go to the TTN topmenu, System Utilities (Command: 1) for information and the necessary program to download in your computer. After getting the files you want onto your computer, you can quit TTN BBS with the <G>oodbye command.

List of Subjects in 40 CFR Part 86

Environmental protection, Administrative practice and procedure, Air pollution control, Gasoline, Incorporation by reference, Motor vehicles, Motor vehicle pollution, Reporting and recordkeeping requirements.

Dated: October 20, 1995.

Carol M. Browner,

Administrator.

For the reasons set out in the preamble, it is proposed to amend part 86 of title 40 of the Code of Federal Regulations as follows:

PART 86—CONTROL OF AIR POLLUTION FROM NEW AND IN-USE MOTOR VEHICLES AND NEW AND IN-USE MOTOR VEHICLE ENGINES: CERTIFICATION AND TEST PROCEDURES

1. The authority citation for part 86 continues to read as follows:

Authority: Secs. 202, 203, 205, 206, 207, 208, 215, 216, 217, and 301(a), Clean Air Act, as amended (42 U.S.C. 7521, 7522, 7524, 7525, 7541, 7542, 7549, 7550, 7552, and 7601(a)).

Subpart A—[Amended]

2. Section 86.094–17 is amended by revising paragraph (j) to read as follows:

§ 86.094–17 Emission control diagnostic system for 1994 and later light-duty vehicles and light-duty trucks.

* * * * *

(j) Demonstration of compliance with California OBD II requirements (Title 13 California Code section 1968.1), as modified pursuant to California Mail Out #95–03 (January 19, 1995), shall satisfy the requirements of this section through the 1998 model year except that compliance with Title 13 California Code section 1968.1(d), pertaining to tampering protection, is not required to satisfy the requirements of this section.

[FR Doc. 95–27070 Filed 10–31–95; 8:45 am]

BILLING CODE 6560–50–P

FEDERAL EMERGENCY MANAGEMENT AGENCY

44 CFR Part 67

[Docket No. FEMA–7157]

Proposed Flood Elevation Determinations

AGENCY: Federal Emergency Management Agency (FEMA).

ACTION: Proposed rule.

SUMMARY: Technical information or comments are requested on the proposed base (1% annual chance) flood elevations and proposed base flood elevation modifications for the communities listed below. The base flood elevations and modified base flood elevations are the basis for the floodplain management measures that the community is required either to adopt or to show evidence of being already in effect in order to qualify or remain qualified for participation in the National Flood Insurance Program (NFIP).

DATES: The comment period is ninety (90) days following the second publication of this proposed rule in a newspaper of local circulation in each community.

ADDRESSES: The proposed base flood elevations for each community are available for inspection at the office of the Chief Executive Officer of each community. The respective addresses are listed in the following table.

FOR FURTHER INFORMATION CONTACT: Michael K. Buckley, P.E., Chief, Hazard Identification Branch, Mitigation Directorate, 500 C Street, SW, Washington, DC 20472, (202) 646–2756.

SUPPLEMENTARY INFORMATION: The Federal Emergency Management Agency proposes to make determinations of base flood elevations and modified base flood elevations for each community listed below, in accordance with Section 110 of the Flood Disaster Protection Act of 1973, 42 U.S.C. 4104, and 44 CFR 67.4(a).

These proposed base flood and modified base flood elevations, together with the floodplain management criteria required by 44 CFR 60.3, are the minimum that are required. They should not be construed to mean that the community must change any existing ordinances that are more stringent in their floodplain management requirements. The community may at any time enact stricter requirements of its own, or pursuant to policies established by other Federal, State, or regional entities. These proposed elevations are used to meet the floodplain management requirements of the NFIP and are also used to calculate the appropriate flood insurance premium rates for new buildings built after these elevations are made final, and for the contents in these buildings.

National Environmental Policy Act

This proposed rule is categorically excluded from the requirements of 44 CFR Part 10, Environmental Consideration. No environmental impact assessment has been prepared.

Regulatory Flexibility Act

The Associate Director, Mitigation Directorate, certifies that this proposed rule is exempt from the requirements of the Regulatory Flexibility Act because proposed or modified base flood elevations are required by the Flood Disaster Protection Act of 1973, 42 U.S.C. 4104, and are required to establish and maintain community eligibility in the NFIP. No regulatory flexibility analysis has been prepared.

Regulatory Classification

This proposed rule is not a significant regulatory action under the criteria of Section 3(f) of Executive Order 12866 of September 30, 1993, Regulatory Planning and Review, 58 FR 51735.

Executive Order 12612, Federalism

This proposed rule involves no policies that have federalism implications under Executive Order 12612, Federalism, dated October 26, 1987.

Executive Order 12778, Civil Justice Reform

This proposed rule meets the applicable standards of Section 2(b)(2) of Executive Order 12778.

List of Subjects in 44 CFR Part 67

Administrative practice and procedure, Flood insurance, Reporting and recordkeeping requirements.

Accordingly, 44 CFR Part 67 is proposed to be amended as follows:

PART 67—[AMENDED]

1. The authority citation for Part 67 continues to read as follows:

Authority: 42 U.S.C. 4001 et seq.; Reorganization Plan No. 3 of 1978, 3 CFR, 1978 Comp., p. 329; E.O. 12127, 44 FR 19367, 3 CFR, 1979 Comp., p. 376.

§ 67.4 [Amended]

2. The tables published under the authority of § 67.4 are proposed to be amended as follows:

State	City/town/county	Source of flooding	Location	#Depth in feet above ground. *Elevation in feet. (NGVD)	
				Existing	Modified
California	San Joaquin County. (Unincorporated Areas).	Bear Creek (Overflow north of Bear Creek).	West of Union Pacific Railroad and south of Pixley Slough.	None	*19
			Just east of Southern Pacific Railroad	None	*36
			Just east of State Highway 99	None	*42
			Just east of Alpine Road	None	*55
			4,000 feet downstream from Jack Tone Road.	None	*83
		Bear Creek (Channel)	At Kettleman Lane	*75	*77
			At Jack Tone Road	*88	*88
			Just downstream of Tully Road	None	*96
		Bear Creek (Overflow south of Bear Creek).	Just east of Thornton Road	None	*12
			Just east of Union Pacific Railroad	None	*22
			Just east of State Highway 99 and north of Eightmile Road.	None	*39
			Above confluence of Mosher Creek	None	*60
			At Sargent Road Tributary	None	*85
		Paddy Creek (Overflow from West Bank).	At confluence with Bear Creek	*71	*73
			At confluence of Middle Paddy Creek	None	*76
			Just downstream of Sargent Road	None	*89
		Paddy Creek (Overflow from East Bank).	At confluence with Bear Creek	None	*67
			Above confluence of South Paddy Creek	*73	*73
			Above confluence of Middle Paddy Creek	None	*78
			Just south of Sargent Road	None	*90
		Middle Paddy Creek (Overflow from South Bank).	At confluence with Paddy Creek	None	#1
		South Paddy Creek (Overflow from South Bank).	At confluence with Paddy Creek	None	*69
		Stockton Diversion Canal (Overflow from North Bank).	At confluence with Calaveras River	*29	*28
			Just east of State Highway 99	#1	*32
			Just east of State Highway 88	*34	*33
			At Copperopolis Road	None	*41
		Mormon Slough (Overflow from North Bank).	At divergence of Stockton Diverting Canal.	None	*41
			Approximately 6,000 feet upstream of Copperopolis Road Crossing of Diverting Canal.	None	*45
			1,000 feet south of Flood Road	None	*95
		Mormon Slough (Overflow from South Bank).	At Southern Pacific Railroad	None	*83
			At Milton Road	None	*85
			1,500 feet downstream of Flood Road	None	*97
		Potter Creek A (Overflow from South Bank).	Upstream of Southern Pacific Railroad	None	*89
			Just downstream of Milton Road	None	*90
		Potter Creek A (Channel and South Bank Overflow).	Just north of Milton Road	None	*92
			Just upstream of Fine Avenue	None	*104
		Potter Creek B (Overflow from North Bank).	Just north of Milton Road	#1	*85
			Approximately 3,000 feet west of Fine Avenue.	None	*99
			Just west of Fine Avenue	None	*102
		Potter Creek B (Overflow from South Bank).	At Milton Road	None	*87
			Just west of Fine Avenue	None	*102
		Potter Creek B (Main Channel and both Overbanks).	Approximately 1,500 feet east of Fine Avenue.	None	*105

Maps are available for inspection at San Joaquin County Flood Control and Water Conservation District, 1810 East Hazelton Avenue, Stockton, California.

Send comments to The Honorable David Baker, County Administrator, San Joaquin County Courthouse, 222 East Weber Avenue, Stockton, California 95202.

	Stockton (City) ..... San Joaquin County.	Bear Creek (Overflow between Bear Creek and Mosher Creek).	Just east of Interstate Highway 5	None	*12
			Just east of Western Pacific Railroad	None	*22
			Just east of West Lane	None	*23
			East of Southern Pacific Railroad and north of Morada Lane.	None	*30
			Just west of State Highway 99	None	*35
		Mosher Creek (Overflow from South Bank).	East of Western Pacific Railroad and west of West Lane.	None	*22

State	City/town/county	Source of flooding	Location	#Depth in feet above ground. *Elevation in feet. (NGVD)	
				Existing	Modified
Maps are available for inspection at Community Development Department/Building Department, City of Stockton, 345 North El Dorado Street, Stockton, California 95202.					
Send comments to The Honorable Joan Darrah, Mayor, City of Stockton, Office of the City Council, City Hall, 425 North El Dorado Street, Stockton, California 95202.					
Louisiana	St. Mary Parish (Unincorporated Areas).	Lower Atchafalaya (Berwick Bay).	Approximately 11,880 feet downstream of the Southern Pacific Railroad.	*10	*10
			Approximately 10,820 feet upstream of the Southern Pacific Railroad.	*12	*12
		Ponding Areas	Ponding area west of the City of Patterson, from north of the Southern Pacific Railroad to Bayou Teche.	*3	*1.5
			Ponding area west of the Town of Berwick, from north of the Southern Pacific Railroad to Bayou Teche.	*3	*1.5
			Ponding area south of the Southern Pacific Railroad, north of the southern portion of levee ring.	*1.5	*1.5
Maps are available for inspection at the St. Mary Parish Courthouse, 500 Main Street, Fifth Floor, Franklin, Louisiana.					
Send comments to The Honorable Connie M. Fournet, St. Mary Parish Judge, St. Mary Parish Government, 500 Main Street, Fifth Floor, Courthouse, Franklin, Louisiana 70538.					
New Mexico	Bosque Farms (Village). Valencia County	Rio Grande (East Overbank).	Approximately 4,200 feet downstream of South Bosque Loop.	*4,857	*4,857
			Approximately 200 feet downstream of Esperanza Road.	*4,864	*4,864
			Approximately 2,500 feet upstream of North Bosque Loop.	*4,871	*4,870
Maps are available for inspection at Village Hall, 1455 West Bosque Farms, Bosque Farms, New Mexico.					
Send comments to The Honorable Carl Allen, Mayor, Village of Bosque Farms, P.O. Box 660, Peralta, New Mexico 87042.					
New Mexico	Los Lunas (Village)	Rio Grande (East Overbank).	Approximately 1,000 feet downstream of the State Highway 49 bridge.	None	*4,844
	Valencia County		Approximately 500 feet upsteam of Lujan Street.	None	*4,846
			Approximately 4,500 feet upstream of Lujan Street.	None	*4,851
		Rio Grande (West Overbank).	Approximately 250 feet downstream of Castillo Street.	None	*4,842
			East Main Street at State Highway 49	None	*4,851
			Approximately 1,000 feet upstream of Griego Road.	None	*4,861
		Rio Grande (Main Channel).	At State Highway 49	None	*4,852
Maps are available for inspection at City Hall, 660 Main Street, Los Lunas, New Mexico.					
Send comments to The Honorable Louis F. Huning, Mayor, Village of Los Lunas, P.O. Box 1209, Los Lunas, New Mexico 87031.					
New Mexico	Valencia County (Unincorporated Areas).	Rio Grande (Main Channel).	Approximately 20,200 feet downstream of State Highway 49.	None	*4,833
			Approximately 100 feet upstream of State Highway 49.	None	*4,852
			Approximately 10,000 feet upsteam of State Highway 49.	*4,860	*4,861
			Approximately 25,000 feet upstream of State Highway 49.	*4,873	*4,874
			Approximately 28,200 feet upsteam of State Highway 49.	None	*4,876
		Rio Grande (East Overbank).	Approximately 2,400 feet downstream of White House Road.	None	*4,829
			Approximately 2,000 feet upstream of White House Road.	*4,836	*4,834
			At State Highway 49	*4,849	*4,845
			Approximately 3,300 feet upstream of Peralta Boulevard.	*4,864	*4,862
			Approximately 12,000 feet upstream of Peralta Boulevard.	None	*4,871

State	City/town/county	Source of flooding	Location	#Depth in feet above ground. *Elevation in feet. (NGVD)	
				Existing	Modified
		Rio Grande (West Overbank).	At Cordova Road	None	*4,833
			At State Highway 49	None	*4,851
			Approximately 24,000 feet upstream of State Highway 49.	None	*4,873

Maps are available for inspection at 444 Luna Avenue, Los Lunas, New Mexico.

Send comments to Mr. Paul H. Gabaldon, County Manager, Valencia County, P.O. Box 1119, Los Lunas, New Mexico 87031.

State	City/town/county	Source of flooding	Location	Existing	Modified
Oklahoma	Noble County (Unincorporated Areas).	Cow Creek	Approximately 5,400 feet downstream of the Atchison, Topeka and Santa Fe Railroad.	None	*968
			Just upstream of the Atchison, Topeka and Santa Fe Railroad.	None	*974
			Approximately 6,600 feet upstream of confluence of Calf Creek.	None	*1,001
		Golf Course Tributary	Approximately 3,700 feet downstream of U.S. Route 77.	None	*972
			At Seventh Street	None	*992
			Just downstream of 15th Street	None	*1,017
			Just upstream of 15th Street	None	*1,023
		Golf Course Lake Tributary.	Approximately 500 feet downstream of Quail Creek Road.	None	*995
			Approximately 300 feet upstream of Quail Creek Road.	None	*1,001
		Wills Lake Tributary	Approximately 1,200 feet downstream of U.S. Route 64.	None	*977
			At U.S. Route 64	None	*987
		Unnamed Tributary to Cow Creek.	Approximately 2,600 feet downstream of Interstate Route 88.	None	*988
			Approximately 1,000 feet upstream of Interstate Route 88.	None	*1,008

Maps are available for inspection at 300 Courthouse Drive, Perry, Oklahoma.

Send comments to The Honorable Jim Lemon, Chairman, Noble County Board of Commissioners, P.O. Box 409, Perry, Oklahoma 73077.

State	City/town/county	Source of flooding	Location	Existing	Modified
Oklahoma	Perry (City) Noble County	Cow Creek	Just upstream of Ivanhoe Street at corporate limits.	None	*978
			Just downstream of U.S. Highway 64	None	*980
			Just downstream of Cedar Street	None	*984
			At confluence with South of Highway 77 Tributary.	None	*992
			At southernmost corporate limits	None	*996
		Calf Creek	At confluence with Cow Creek	None	*989
			Just upstream of Cedar Street	None	*1,018
			Just upstream of 15th Street	None	*1,020
			Just upstream of 25th Street	None	*1,047
			Just upstream of St. Louis-San Francisco Railroad.	None	*1,063
			Just upstream of Interstate Highway 35	None	*1,083
		Cherokee Strip Tributary	At confluence with Calf Creek	None	*1,048
			Just upstream of U.S. Highway 64	None	*1,049
			Just upstream of Interstate Highway 35	None	*1,090
		Ditch Witch Tributary	At confluence with Calf Creek	None	*1,029
			Just upstream of U.S. Highway 64	None	*1,032
		South of Highway 77 Tributary.	At confluence with Cow Creek	None	*992
			Just upstream of the Atchison, Topeka and Santa Fe Railroad at corporate limits.	None	*998
		Unnamed Tributary A of Calf Creek.	At confluence with Calf Creek	None	*1,023
			Just upstream of St. Louis-San Francisco Railroad.	None	*1,023
		Unnamed Tributary B of Calf Creek.	At confluence with Calf Creek	None	*1,025
			Approximately 2,000 feet upstream of confluence with Calf Creek.	None	*1,035
			Just upstream of St. Louis-San Francisco Railroad.	None	*1,052
		Unnamed Tributary C of Calf Creek.	At confluence with Calf Creek	None	*1,024
			Just upstream of St. Louis-San Francisco Railroad.	None	*1,027
		Leo Park Tributary	At confluence with Cow Creek	None	*984

State	City/town/county	Source of flooding	Location	#Depth in feet above ground. *Elevation in feet. (NGVD)	
				Existing	Modified
			Just upstream of Cedar Street	None	*988
			Approximately 1,200 feet upstream of Cedar Street.	None	*990
		Golf Course Tributary	Just upstream of easternmost corporate limits.	None	*973
			Just upstream of U.S. Route 77	None	*980
			Just upstream of Seventh Street	None	*992
			Just downstream of 15th Street	None	*1,018
		Golf Course Lake Tributary.	At confluence with Golf Course Tributary	None	*995
			Just upstream of Quail Creek Road	None	*1,001
		Brookwood Park Tributary	At confluence with Golf Course Tributary	None	*978
			Just upstream of U.S. Route 77	None	*997
			Just upstream of Seventh Street	None	*1,009
			Just upstream of Ninth Street	None	*1,019
		Wills Lake Tributary	Approximately 600 feet upstream of the confluence with Cow Creek.	None	*980
			Just downstream of U.S. Route 64	None	*986

Maps are available for inspection at 732 Delaware, Perry, Oklahoma.

Send comments to The Honorable G. L. Hollingsworth, Mayor, City of Perry, 622 Cedar Street, Perry, Oklahoma 73077.

(Catalog of Federal Domestic Assistance No. 83.100, ''Flood Insurance.'')

Dated: October 24, 1995.

Richard T. Moore,

Associate Director for Mitigation.

[FR Doc. 95–27083 Filed 10–31–95; 8:45 am]

BILLING CODE 6718–04–P

FEDERAL COMMUNICATIONS COMMISSION

47 CFR Chapter I

[WT Docket No. 95–157; RM–8643; FCC 95–426]

Plan for Sharing the Costs of Relocation

AGENCY: Federal Communications Commission.

ACTION: Proposed rule.

SUMMARY: The Commission adopted a *Notice of Proposed Rule Making* (''*Notice*''), proposing a plan for sharing the costs of relocating microwave facilities operating in the 1850 to 1990 MHz (''2 GHz'') band. The Commission's proposal would establish a system whereby Personal Communications Services (''PCS'') licensees that incur costs to relocate microwave links outside of their assigned licensing areas or spectrum blocks would receive reimbursement for a portion of those costs from other PCS licensees that benefit from the resulting clearance of the spectrum. In addition to cost-sharing issues, the Commission asks for comment on whether to clarify certain other aspects of the Commission's microwave relocation rules. Specifically, the Commission seeks comment on whether to clarify the definition of ''good faith'' negotiations, which are required during the mandatory negotiation period; whether to clarify the definition of ''comparable'' facilities, which must be provided to microwave incumbents by PCS licensees who seek involuntary relocation; whether to clarify the rules that allow relocated microwave licensees a 12-month trial period to ensure their new facilities are comparable; whether to continue to grant microwave applications for primary status in the 2 GHz band; and whether to place a time limit on a PCS licensee's obligation to provide comparable facilities. Also, the Commission stated that, as of the date the *Notice* was adopted, it would grant primary status applications only for minor modifications that would not add to the relocation costs of PCS licensees.

DATES: Comments must be filed on or before November 30, 1995, and reply comments must be filed on or before December 21, 1995.

ADDRESSES: Federal Communications Commission, 1919 M Street NW., Washington, D.C. 20554.

FOR FURTHER INFORMATION CONTACT: Linda I. Kinney, (202) 418–0620, Wireless Telecommunications Bureau.

SUPPLEMENTARY INFORMATION: This is a synopsis of the *Notice*, adopted on October 12, 1995, and released on October 13, 1995. The complete text of this *Notice* is available for inspection and copying during normal business hours in the FCC Dockets Branch, Room 239, 1919 M Street NW., Washington, D.C., and also may be purchased from the Commission's copy contractor, International Transcription Service, at (202) 857–3800, 2100 M Street NW., Suite 140, Washington, D.C. 20037.

I. Background

In the *First Report and Order and Third Notice of Proposed Rule Making* in ET Docket No. 92–9, 57 FR 49020 (October 29, 1992) (''*ET First Report and Order*''), the Commission reallocated the 1850–1990, 2110–2150, and 2160–2200 MHz bands from private and common carrier fixed microwave services to emerging technology services. The Commission also established procedures for 2 GHz microwave incumbents to be cleared off of emerging technology spectrum and relocated to available frequencies in higher bands. The *ET First Report and Order* set forth a regulatory framework that encourages incumbents to negotiate voluntary relocation agreements with emerging technology licensees or manufacturers of unlicensed devices when frequencies used by the incumbent are needed to implement the emerging technology. The *ET First Report and Order* also stated that, should voluntary relocation negotiations fail, the emerging technology licensee could request mandatory relocation of the existing facility, provided that the emerging technology service provider pays the cost of relocating the incumbent to a comparable facility.

In the Commission's 1993 *Third Report and Order and Memorandum Opinion and Order* in ET Docket No. 92–9, 58 FR 46547 (September 2, 1993) (''*ET Third Report and Order*''), as

modified on reconsideration by the Commission's 1994 *Memorandum Opinion and Order,* 59 FR 19642 (April 25, 1994) (''*ET Memorandum Opinion and Order*''), the Commission established additional details of the transition plan to enable emerging technology providers to relocate incumbent facilities to other spectrum. The relocation process now in effect consists of two periods that must expire before an emerging technology licensee may proceed to request involuntary relocation. The first is a fixed two year period for voluntary negotiations (three years for public safety incumbents, *e.g.*, police, fire, and emergency medical), during which the emerging technology providers and microwave licensees may negotiate any mutually acceptable relocation agreement. If no agreement is reached during the voluntary negotiation period, the emerging technology licensee may initiate a one-year mandatory negotiation period—or two-year mandatory period if the incumbent is a public safety licensee—during which the parties are required to negotiate in good faith. Should the parties fail to reach an agreement during the mandatory negotiation period, the emerging technology provider may request involuntary relocation of the existing facility. After relocation, the microwave incumbent is entitled to a one-year trial period to determine whether the facilities are comparable. If the relocated incumbent can demonstrate that the new facilities are not comparable to the former facilities, the emerging technology licensee must remedy the defects or pay to relocate the microwave licensee back to its former or an equivalent 2 GHz frequency.

Because of the pattern of use of the 1850–1990 MHz band by microwave incumbents, the relocation burden on each PCS licensee is not necessarily limited to microwave links within its spectrum block and licensing area. Some spectrum blocks assigned to microwave incumbents overlap with one or more PCS blocks. Also, incumbents' receivers may be susceptible to adjacent or co-channel interference from PCS licensees in more than one PCS spectrum block. In order to clear a particular spectrum block for unrestricted PCS use, a PCS licensee may be required to relocate links in other licensing areas or on other spectrum blocks that would otherwise cause or receive interference.

On May 5, 1995, Pacific Bell Mobile Services filed a Petition for Rulemaking (''PacBell Petition'') that proposed a detailed cost-sharing plan in which PCS licensees on all blocks, licensed and unlicensed, would share in the cost of relocating microwave stations. On May 16, 1995, the Commission requested comments on PacBell's proposal. Initial comments were due on June 15, 1995 and replies were due June 30, 1995. The Commission's cost-sharing proposal is based on PacBell's Petition, as modified by the Personal Communications Industry Association (hereinafter referred to as the ''PCIA consensus proposal'').

II. Notice of Proposed Rule Making

A. Cost-Sharing Proposal

The Commission tentatively concludes that the public interest is served by requiring PCS licensees that benefit from the relocation of a microwave link to contribute to the costs of that relocation. Under the Commission's current rules, the PCS licensee that relocates microwave links (hereinafter referred to as the ''PCS relocator'') has no right to reimbursement if a PCS licensee relocates a microwave link that encumbers another PCS licensee's authorized frequencies or is located in another licensee's territory. Any form of cost-sharing that occurs must be by private, voluntary negotiation. Although affected PCS entities may be able to identify each other and negotiate a joint relocation agreement, parties benefitting from a relocation may not be in a position to reach such an agreement before one of the parties must move the link of its own business reasons. In addition, prior to the licensing of the C, D, E, and F blocks, informal cost sharing of relocation expenses that benefit these blocks in impossible because the licensees for these blocks are unknown. As a result, existing PCS licensees may be hesitant to move links unilaterally without some assurance that future competitors who benefit from the relocation will pay a share of the cost.

The Commission believes that adoption of a mandatory cost-sharing plan would significantly enhance the speed of relocation by reducing the ''free rider'' problem and creating incentives for PCS licensees to negotiate system-wide relocation agreements with microwave incumbents. This would in turn result in faster deployment of PCS and delivery of service to the public. The Commission also tentatively concludes that the PCIA consensus proposals, with a few modifications, offers a practical and equitable approach to allocating the costs of relocation. The mechanics of the plan are set forth in more detail below. The Commission seeks comment on the advantages and disadvantages of adopting mandatory cost-sharing and on the specifics of this proposal.

1. Mechanics of the Cost-Sharing Plan

The Cost-Sharing Formula. Under PCIA's consensus proposal, PCS licensees would be entitled to reimbursement based on a cost-sharing formula. The formula is derived by amortizing the cost of relocating a particular microwave link over a ten-year period. As PCS licensees enter the market, their share of relocation costs is adjusted to reflect the total number of PCS licensees that benefit and the relative time of market entry. The proposed formula is:

$$R_N = \frac{C}{N} \times \frac{\left[120 - \left(T_N - T_1\right)\right]}{120}$$

R equals the amount of reimbursement.

C equals the amount paid to relocate the link.

N equals the next PCS licensee that would interfere with the link. (The PCS relocator is denominated as N=1. After the link is relocated, the next PCS provider that would interfere would be 2, as so on.)

T_N equals T_1 plus the number of months that have passed since the relocator obtained its reimbursement rights.

T_1 equals the month that the first PCS licensee obtained rights to reimbursement (as denoted by the numerical abbreviation for each month, *i.e.*, March=3).

The Commission tentatively concludes that the above formula provides an effective and straightforward means of determining a subsequent licensee's reimbursement obligation. The Commission also tentatively agrees with PCIA that a PCS relocator should be entitled to full reimbursement for relocating links with both endpoints outside of its licensed service area, subject to the reimbursement cap (discussed in further detail below). Such links are unlikely to interfere with the relocator's system, and are easy to identify for purposes of administering the cost-sharing plan. The Commission requests comment on its proposal and any alternatives.

Expenses Already Incurred. The Commission tentatively concludes that PCS licensees should be permitted to seek reimbursement for any relocation costs incurred after the voluntary negotiation period began for A and B block broadband PCS licensees on April 5, 1995. Once the new rules are effective, a clearinghouse would be established (as discussed in further detail below), and receipts from

expenses already incurred would be submitted to the clearinghouse for accounting purposes. This would allow those PCS licensees, which have already relocated or are in the process of relocating microwave systems, to receive the same reimbursement benefit as other PCS licensees that relocate microwave systems after any rule change. The Commission seeks comment on this proposal.

Compensable Costs. Relocation costs can be divided roughly into the following two categories: the actual cost of relocating a microwave incumbent to comparable facilities, and payments above the cost of providing comparable facilities, referred to as ''premium payments.'' The Commission tentatively concludes that premium payments should not be reimbursable, because such payments are likely to be paid by PCS licensees to accelerate relocation so that they can be the first licensee in the market area to offer PCS services. The Commission does not believe later that market entrants should be required to contribute to premium payments, because they have not received the corresponding advantage of being first to market. The Commission therefore proposes to limit the calculation of reimbursable costs under the formula to actual relocation costs. Actual relocation costs would include such items as: radio terminal equipment (TX and/or RX—antenna, necessary feed lines, MUX/Modems); towers and/or modifications; back-up power equipment; monitoring or control equipment; engineering costs (design/path survey); installation; systems testing; FCC filing costs; site acquisition and civil works; zoning costs; training; disposal of old equipment; test equipment (vendor required); spare equipment; project management; prior coordination notification under Section 21.100(d) of the Commission's rules, 47 CFR 21.100(d); site lease renegotiation; required antenna upgrades for interference control; power plant upgrade (if required); electrical grounding systems; Heating Ventilation and Air Conditioning (HVAC) (if required); alternate transport equipment; and leased facilities. The Commission requests comment on this proposal, and on any additional types of costs that commenters believe should be eligible for reimbursement.

Length of Obligation. The Commission tentatively concludes that the cost-sharing plan should sunset for all PCS licensees ten years after the date that voluntary negotiations commenced for A and B block licensees, which means that cost-sharing would cease on April 4, 2005. The Commission believes that it is important to set a date certain on which the clearinghouse will be dissolved, and adopt a cost-sharing plan with the fewest possible variables so that it will be easy to administer. The Commission also believes that this time period is sufficient for all licensees (including those in the C, D, E, and F blocks, which will be licensed in the near future) to complete most relocation agreements. This ten-year period also roughly coincides with the initial PCS license terms and the ten-year depreciation period under the proposed formula. To the extent that some obligations would have extended beyond this date under the formula, the Commission believes that the limited benefit that licensees would receive is outweighed by the cost of maintaining a clearinghouse beyond the ten-year period. The Commission seeks comment on this proposal.

Reimbursement Cap. The Commission tentatively concludes that a cap on the amount subject to reimbursement under the cost-sharing formula is appropriate, because it protects future PCS licensees—who have no opportunity to participate in the negotiations—from being required to contribute to excessive relocation expenses. The Commission also tentatively concludes that a cap will not force microwave licensees to contribute to the cost of their own relocation, because a cap on the amount subject to reimbursement does not limit payments to microwave incumbents. If a cap is imposed, the Commission believes that the amount should be sufficient to cover the average cost of relocating a link. While this may require the initial PCS relocator to bear more of the cost in cases where relocation expenses are unusually high, setting the cap at a higher level could shift the burden unfairly to subsequent licensees in many more cases. Therefore, the Commission tentatively concludes that a $250,000 per link cap (plus $150,000 if a tower is required) is appropriate. This amount has the consensus support of PCS commenters as an accurate approximation of the likely cost of relocating most microwave stations. In addition, UTAM has estimated that relocation costs will average $200,000 per link to cover the same distance as an existing single microwave link. The Commission requests comment on this proposal.

2. Cost-Sharing Obligation

Creation of Reimbursement Rights. The Commission tentatively concludes that the PCS relocator should obtain some form of rights for which it would be entitled to reimbursement. The Commission proposes that, once a PCS licensee and a microwave incumbent have signed an agreement that provides for the relocation of a specified number of microwave links, the parties would submit the relocation agreement to a clearinghouse. On the date that the relocation agreement is submitted, the clearinghouse would replace the name of the microwave incumbent with the name of the PCS relocator in a database maintained for the purpose of determining reimbursement. As of that date, the PCS relocator would become the holder of ''reimbursement rights'' for all links covered by the relocation agreement. When a subsequent PCS licensee begins the prior coordination notice (''PCN'') process required by Section 21.100(d) of the Commission's rules, 47 CFR 21.100(d), that licensee would also contact the clearinghouse to determine whether any PCS relocators hold reimbursement rights for the channel over which it intends to transmit.

The Commission tentatively concludes that the creation of reimbursement rights—which are separate, distinct, and unaffiliated with the underlying microwave license—are preferable to the concept of transferring the microwave incumbent's ''interference'' rights as proposed by PCIA. First, the Commission believes that it is important for the microwave incumbent to retain all of its rights under its original authorization until its new system is in place. Second, any transfer of rights relating to a license (even if only partial rights are being transferred) would require Commission approval under Section 310(d) of the Communications Act, as amended. Thus, under PCIA's proposal, the microwave incumbent would be required to request permission from the Commission to transfer its interference rights to a PCS licensee. The PCS licensee could not obtain the interference rights until the Commission has acted. The Commission believes that such a procedure would be time consuming and administratively cumbersome. Third, the interference rights would have to exist independently from the microwave license, so that they would not be cancelled at the same time the microwave incumbent returns its 2 GHz license to the Commission. The Commission seeks comment on the creation of reimbursement rights.

Another alternative would be for the microwave licensee to assign its microwave license to the PCS licensee under Section 94.47 of the Commission's rules, 47 CFR 94.47, as part of a relocation agreement. The assignment would require Commission

approval, but would effectively transfer the incumbent's entire license to the PCS licensee. The difficulty with this approach is that under Section 94.53 of the Commission's rules, 47 CFR 94.53, the microwave license must be cancelled if the facility has been non-operational for a year. Because the PCS licensee would not operate a microwave system, a mechanism would be required that enables the PCS licensee to exercise its rights after the microwave facility has become non-operational. The Commission seeks comment on the above options and any alternatives.

Definition of Interference. To ascertain whether subsequent licensees are obligated to make a payment under the proposed plan, the Commission must decide what standard will be used to determine interference, and what type of interference (*e.g.,* co-channel, adjacent channel) triggers a cost-sharing obligation. The Commission tentatively concludes that the Telecommunications Industry Association (''TIA'') Bulletin 10–F is an appropriate standard for determining interference for purposes of the cost-sharing plan. TIA Bulletin 10–F is already the standard used to determine PCS-to-microwave interference.

The Commission also notes, however, that the procedures set forth in TIA Bulletin 10–F permit the use of different propagation models and allow alternative technical parameters to be employed. Therefore, TIA Bulletin 10–F may not provide a clear standard for determining interference in some situations. Thus, the Commission seeks comment on whether the application of Bulletin 10–F should be limited in scope for reimbursement purposes to the minimum coordination distance equations. Under this approach, reimbursement would be required for all facilities within the calculated coordination zone from the PCS base station, rather than basing the requirement on the more complex and variable computations of potential interference. The Commission tentatively concludes that use of these minimum coordination distance equations would simplify administration of the test for determining whether a cost-sharing obligation exists, and would reduce the number of disputes that may otherwise arise over whether interference would have occurred if the link were still operational. The Commission requests comment on whether any of the other standard equations of TIA Bulletin 10–F may be applied more easily for purposes of cost-sharing. The Commission also seeks comment on whether there is a more appropriate industry-accepted standard for determining interference.

The Commission also notes that incumbent microwave licensees generally employ receivers with ''receiving bandwidths'' that significantly exceed the authorized bandwidth of the associated transmitter. Accordingly, microwave receivers generally require protection over a frequency range twice as large as the transmission bandwidth (*i.e.,* a microwave station with a 5 MHz transmit bandwidth would require protection within a 10 MHz band to protect its corresponding receive station). For purposes of determining a reimbursement obligation, however, the Commission proposes to consider only interference that occurs co-channel to the transmit and receive bandwidth of the incumbent microwave licensee. For reimbursement and cost-sharing purposes only, the Commission proposes that a 5 MHz bandwidth transmit microwave station would receive only 5 MHz protection for its receive stations (rather than the 10 MHz adjacent channel protection it would typically require to protect its receive station). Excluding adjacent channel interference for purposes of cost-sharing will serve to simplify administration of the cost-sharing plan by providing more certainty in determining when a reimbursement obligation exists. Also, it would reduce the number of receive stations that would be calculated to receive interference, thereby limiting the number of situations under which reimbursement is required. The Commission seeks comment on this proposal and any alternatives. The Commission also requests comment on whether adjacent channel interference (*i.e.,* 5 MHz transmit and 10 MHz receive protection) should be included for purposes of determining a reimbursement obligation.

With respect to the type of interference that should trigger a cost-sharing obligation, the Commission tentatively concludes that a two-part test should be adopted for determining whether reimbursement is required. Thus, a subsequent licensee would be required to reimburse the PCS relocator only if (1) The subsequent PCS licensee's system would have caused co-channel interference to the link that was relocated, and (2) at least one endpoint of the former link was located within the subsequent PCS licensee's authorized market area. The Commission requests comment on whether reimbursement should also be required if the link that is relocated would have caused adjacent-channel interference to the subsequent licensee, and whether it would be difficult to determine if adjacent-channel interference would have occurred.

Payment Issues. The Commission tentatively concludes that a PCS licensee should be required to pay under the cost-sharing formula at the time that its operations would have caused interference with the relocated link. The Commission also tentatively concludes that a PCS licensee's reimbursement obligation should be determined at the time frequency coordination is required. Thus, the Commission proposes that PCS licensees contact the clearinghouse to determine reimbursement obligations prior to initiating service, although payment would not be due in full until the date that the PCS licensee commences commercial operations. The Commission seeks comment on these proposals.

In addition, the Commission tentatively concludes that PCS licensees that are allowed to pay for their licenses in installments under the Commission's designated entity rules should have the same option available to them with respect to payments under the cost-sharing formula. The Commission also tentatively concludes that the installment payment option should be extended to the Unlicensed PCS Ad Hoc Committee for 2 GHz Microwave Transition and Management (''UTAM''). Allowing cost-sharing payments to be made in installments will significantly ease the burden of cost-sharing for these entities. The Commission further proposes that the specific terms of the installment payment mechanism, including the treatment of principal and interest, would be the same as those applicable to the licensee's auction payments described above. Thus, if a licensee is entitled to pay its winning bid in quarterly installments over ten years, with interest-only payments for the first year, it would pay relocation costs under the same formula. Because UTAM receives its funding in small increments over an extended period of time, the Commission tentatively concludes that UTAM should qualify for the most favorable installment payment plan available to small businesses with gross revenues of $40 million or less. UTAM would therefore be permitted to make its payments on the same terms as the C Block small businesses (*i.e.,* using installments, at a rate equal to ten-year U.S. Treasury obligations applicable on the date the license is granted, and requiring that payments include interest only for the first six years with payments of principal and interest amortized over the remaining four years of the license term). The Commission

seeks comment on whether the repayment schedules and interest rates that it adopted for repaying auction bids are appropriate for cost-sharing purposes.

3. Role of Clearinghouse

The Commission tentatively concludes that if the proposed cost-sharing plan is adopted, it should be administered by an industry-supported clearinghouse. The Commission believes an industry-supported clearinghouse is preferable to having the cost-sharing plan administered by the Commission for several reasons. First, administration of the plan by the Commission would be a significant drain on the Commission's administrative resources. Second, the Commission believes that the PCS industry has the capability and the incentive to support an industry clearinghouse. The Commission does not propose at this time to designate any particular organization as the clearinghouse, but seeks comment on the criteria it should use for designating a clearinghouse, and on whether it should be an existing organization or a new entity created for this purpose. The Commission also seeks comment on how the clearinghouse would be funded. One possibility would be for PCS licensees who seek reimbursement under the cost-sharing plan to pay an administrative fee to the clearinghouse for each relocated link that is potentially compensable under the plan. The Commission believes that any fees assessed should be tied to the actual administrative costs of operating the clearinghouse. The Commission seeks comment on the appropriate fee level, as well as on any possible alternative approaches to funding the clearinghouse.

PCS licensees that seek reimbursement under the formula would be required to submit all applicable data, including contracts, to the clearinghouse, which would open a file for each relocation. The clearinghouse would then determine whether operation by the new PCS licensee would have caused interference to a relocated microwave facility, based on TIA Bulletin 10–F. If interference would have occurred, the clearinghouse would notify the new licensee of its reimbursement share under the formula. The Commission seeks comment regarding potential confidentiality issues with respect to information submitted to the clearinghouse. The Commission believes that specific information regarding relocation costs will need to be available to parties that wish to verify the accuracy of the clearinghouse's reimbursement calculations. The Commission also believes that an open flow of information is important to the smooth administration of the cost-sharing plan, which in turn is likely to facilitate productive negotiations between PCS licensees and microwave incumbents. Finally, the Commission believes that confidentiality issues should be resolved by PCS and microwave licensees rather than by the Commission. The Commission therefore seeks comment on the extent to which the cost-sharing proposal can accommodate the confidentiality concerns of the parties.

4. Dispute Resolution Under the Cost-Sharing Plan

The Commission tentatively concludes that disputes arising out of the cost-sharing plan (*i.e.*, disputes over the amount of reimbursement required, etc.) should be brought, in the first instance, to the clearinghouse for resolution. To the extent that disputes cannot be resolved by the clearinghouse, the Commission encourages parties to use expedited alternative dispute resolution procedures (''ADR''), such as binding arbitration, mediation, or other ADR techniques. The Commission seeks comment on this proposal and on any other mechanisms that would expedite resolution of these disputes, should they arise. The Commission also seeks comment on whether parties should be required to submit independent appraisals of valuations to the clearinghouse at the time such disputes are brought to the clearinghouse for resolution. In addition, the Commission seeks comment on whether failure to comply with cost-sharing obligations should be taken into consideration by the Commission when deciding on renewal and/or transfer of control or assignment applications.

B. Relocation Guidelines

1. Good Faith Requirement During Mandatory Negotiations

If a relocation agreement is not reached during the voluntary negotiation period, the Commission stated in the *ET Third Report and Order* that the PCS licensee may initiate a mandatory negotiation period, during which the parties are required to negotiate in good faith. The Commission believes that clarification of the term ''good faith'' will facilitate negotiations and help reduce the number of disputes that may arise over varying interpretations of what constitutes good faith. The Commission tentatively concludes that, for purposes of the mandatory period, an offer by a PCS licensee to replace a microwave incumbent's system with comparable facilities (defined in further detail below) constitutes a ''good faith'' offer. Likewise, an incumbent that accepts such an offer presumably would be acting in good faith; whereas, failure to accept an offer of comparable facilities would create a rebuttable presumption that the incumbent is not acting in good faith. Comparable facilities, as explained below, would be limited to the actual costs associated with providing a replacement system, and would exclude any expenses (*e.g.*, consultant fees) incurred by the incumbent without securing the approval in advance from the PCS relocator. The Commission seeks comment on this proposal. The Commission also seeks comment on the appropriate penalty to impose on a licensee that does not act in good faith.

2. Comparable Facilities

The Commission continues to believe that the current negotiation process is the most appropriate means for determining comparability of the existing and replacement facilities. The Commission believes that, in the vast majority of cases, this procedure provides parties with the necessary flexibility to negotiate terms for determining comparability that are mutually agreeable to all parties without the need for government intervention or mandate. Nonetheless, the Commission recognizes that because comparability is such a key concept of the Commission's rules, some clarification of the responsibilities and obligations of the parties with regard to comparability would be helpful. Accordingly, the Commission proposes to clarify the factors that it will use to determine when a facility is comparable, *i.e.*, equal to or superior to the fixed microwave facility it is replacing.

The Commission previously stated in the *ET Third Report and Order* that to determine comparability it will consider, *inter alia*, system reliability, capability, speed, bandwidth, throughput, overall efficiency, bands authorized for such services, and interference protection. The Commission notes, however, that many of these factors are inter-related and that equivalency in each and every one of these factors is not necessary for comparability. The Commission therefore now proposes to clarify that the three main factors it will use to determine when a facility is comparable are: *communications throughput*, *system reliability*, and *operating cost*. A replacement facility will be presumed

comparable if the new system's communications throughput and reliability are equal to or greater than that of the system to be replaced, and the operating costs of the replacement system are equal to or less than those of the existing system. This will ensure that incumbent users will perceive no qualitative difference between the original and replacement facilities.

For the purpose of determining comparability, the Commission proposes to define communications throughput as the amount of information transferred within the system for a given amount of time. For digital systems this is measured in bits per second (''bps''), and for analog systems the throughput is measured by the number of voice and or data channels. The Commission proposes to define system reliability as the amount of time information is accurately transferred within the system. The reliability of a system is a function of equipment failures (*e.g.*, transmitters, feed lines, antennas, receivers, battery back-up power, etc.), the availability of the frequency channel due to propagation characteristic (*e.g.*, frequency, terrain, atmospheric conditions, radio-frequency noise, etc.), and equipment sensitivity. For digital systems this would be measured by the percent of time the bit error rate (''ber'') exceeds a desired value, and for analog transmissions this would be measured by the percent of time that the received carrier-to-noise ratio exceeds the receiver threshold. The Commission proposes to define operating cost as the cost to operate and maintain the microwave system. For the purpose of defining comparable systems, the Commission proposes to assume that the operating cost of all microwave systems are the same provided that they contain the same number of links. The Commission also proposes to consider facilities comparable in cases where the specific increased costs associated with the replacement facilities (*e.g.*, additional tower and associated radio equipment requirements, additional rents, or land acquisition costs) are paid by the party relocating the facility, or the existing microwave operator is fully compensated for those increased costs. The Commission proposes that any recurring costs be limited to a single ten-year license term. The Commission seeks comment on these definitions.

The Commission recognizes that comparable replacement facilities can be provided by ''trading-off'' system parameters. For example, communications throughput may be increased by using equipment with a more efficient modulation technique, and system reliability may be improved by using better equipment, by adding redundancy in system design (*e.g.*, multiple receive antennas) or by providing additional coding, such as forward error correction. Therefore, a system designer may take advantage of these system ''trade-offs'' to provide comparable facilities.

The Commission also proposes to clarify that the obligation to provide comparable facilities under involuntary relocation requires a PCS licensee to pay the cost of relocating only the specific microwave links in the incumbent's system that must be moved to prevent harmful interference by the PCS licensee's system. While the Commission expects that PCS licensees may voluntarily undertake to relocate entire microwave systems that include non-interfering links outside the PCS licensee's particular service area, it does not regard this as a requirement under involuntary relocation. With respect to those links that do cause interference, however, PCS licensees must provide incumbents with a seamless transition from the old facilities to the replacement facilities. Thus, it may be both more efficient and more cost-effective in many instances for the parties to move all of the links in a system at once rather than to relocate them piecemeal. The Commission seeks comment on this analysis. The Commission also tentatively concludes that comparable facilities would be limited to the actual costs associated with providing a replacement system (*e.g.*, equipment, engineering expenses). The Commission proposes to exclude extraneous expenses, such as fees for attorneys and consultants that are hired by the incumbent without the advance approval of the PCS relocator. The Commission considers such extraneous expenses to be ''premium payments'' that are not reimbursable after the voluntary negotiation period has concluded. The Commission seeks comment on its proposal and any alternatives.

In assessing comparability, the Commission also seeks comment on how to account for technological disparities between old and new microwave equipment. In many cases, microwave incumbents may seek to replace old 2 GHz analog technology with new digital technology on the relocated channel. The Commission encourages such agreements, but it does not regard PCS licensees as being required to replace existing analog with digital equipment when an acceptable analog solution exists. Thus, the cost obligation of the PCS licensee would be the minimum cost the incumbent would incur if it sought to replace but not upgrade its system. The Commission seeks comment on this proposal and on any alternatives.

The Commission also seeks comment on whether and how depreciation of equipment and facilities should be taken into account.

Furthermore, the Commission seeks comment on whether additional information about the value of an incumbent's current system and the anticipated costs of relocation would also help to facilitate negotiations. For example, the Commission could require that two independent cost estimates—prepared by third parties not associated or otherwise affiliated with either the incumbent licensee or the PCS provider—be filed with the Commission by parties that have not reached an agreement within one year after the commencement of the voluntary negotiation period (April 4, 1996 for A and B block licensees). The Commission seeks comment on whether it should require the parties to submit such cost estimates during the voluntary negotiation period. The Commission also seeks comment on what procedures should be used if the microwave incumbent and the PCS licensee cannot agree on a third party to prepare the independent cost estimate.

3. Public Safety Certification

In the *ET Third Report and Order*, the Commission identified the select group of public service licensees that warrant special protection (*e.g.*, an extended voluntary negotiation period). The Commission tentatively concludes the PCS licensees should have a readily available means of confirming a microwave licensee's public safety status. Thus, the Commission proposes that a public safety licensee should be required to establish: (1) that it is eligible in the Police Radio, Fire Radio, or Emergency Medical, or Special Emergency Radio Services, (2) that it is a licensee in one or more of these services, and (3) that the majority of communications carried on the facilities involve safety of life and property. Under the Commission's proposal, if the incumbent fails to provide the PCS licensee with the requisite documentation, the PCS licensee may presume that special treatment is inapplicable to the incumbent. The Commission seeks comment on this proposal.

C. Twelve-Month Trial Period

Section 94.59(e) of the Commission's rules, 47 CFR 94.59(e), provides a twelve-month period for relocated microwave incumbents to test their new

facilities. The purpose of the twelve-month trial period is to ensure that microwave incumbents have a full opportunity to test their new systems under real-world operating conditions and to obtain redress from the PCS licensee if the new system does not perform comparably to the old system or pursuant to agreed-upon terms. The Commission proposes that this period should commence at the time that the microwave licensee begins operations on its new system. The Commission also tentatively concludes that microwave licensees that have retained their 2 GHz authorizations during the twelve-month trial period should surrender them at the conclusion of that period.

Moreover, the Commission does not believe that microwave licensees are required to retain their 2 GHz licenses through the trial period in order to retain their rights to relocation and comparable facilities. Section 94.59 of the Commission's rules, 47 CFR 94.59, provide that, if the new facility is found not to be comparable during the trial period, the PCS licensee must either cure the problem, restore the incumbent to its original frequency, or pay to relocate it to an equivalent 2 GHz frequency. In the Commission's view, all of these rights reside with the incumbent as a function of the Commission's relocation rules, regardless of whether the incumbent has previously surrendered its license. The Commission therefore proposes to clarify its rules to indicate that a microwave license may surrender its license as part of a relocation agreement without prejudice to its rights under the Commission's relocation rules. The Commission requests comment on this proposal.

D. Licensing Issues

1. Interim Licensing

As a general matter, the Commission tentatively concludes that allowing additional primary site grants in the 2 GHz band now that relocation negotiations are ongoing will unnecessarily impede negotiations and may add to the relocation obligations of PCS licensees. Nevertheless, the Commission recognizes that some minor technical changes to existing microwave facilities may be necessary for incumbents' continued operations. The Commission does not believe, however, that these minor technical modifications will significantly increase the cost to a PCS licensee of relocating a particular link.

To the extent practicable the Commission proposes to continue applying the current rules governing primary and secondary status to modification and minor extension applications pending as of the adoption date of the *Notice.* While the rulemaking proceeding is pending, the Commission will continue to accept applications for primary status, however it will process only minor modifications that would not add to the relocation costs of PCS licensees. Thus, while the rulemaking proceeding is pending, the Commission will grant primary status applications for the following limited number of technical changes: decreases in power, minor changes in antenna height, minor coordinate corrections (up to two seconds), reductions in authorized bandwidths, minor changes in structure heights, changes in ground elevation (but preserving centerline height), and changes in equipment. Any other modifications will be permitted only on a secondary basis, unless a special showing of need justified primary status and the incumbent is able to establish that the modification would not add to the relocation costs of PCS licensees. In addition, the Commission will carefully scrutinize any applications for transfer of control or assignment to establish that its microwave relocation procedures are not being abused, and that the public interest would be served by the grant.

As of the adoption date of its new rules, the Commission proposes to grant all other modifications and extensions solely on a secondary basis (with the exception of the minor technical changes listed above). Secondary operations may not cause interference to operations authorized on a primary basis, and they are not protected from interference form primary operations. The Commission believes that granting secondary site authorizations serves the public interest, because it balances existing licensees' need to expand their systems with the goal of minimizing the number of microwave links that PCS licensees must relocate. The Commission seeks comment on this proposal.

2. Secondary Status After Ten Years

Section 94.59(c) of the Commission's rules, 47 CFR 94.59(c), states that the Commission will amend the operation license of the fixed microwave operator to secondary status only if the emerging technology service entity provides that 2 GHz incumbent with comparable facilities. The Commission tentatively concludes that microwave incumbents should not retain primary status indefinitely on spectrum licensed for emerging technology services. Thus, the Commission proposes that microwave incumbents that are still operating in the 1850–1990 MHz band on April 4, 2005, should be made secondary on that date. This date coincides with the date that the clearinghouse would be dissolved and provides adequate time for completion of microwave relocation. The Commission seeks comments on whether there should be some time limit placed on the emerging technology provider's obligation to provide comparable facilities.

III. Procedural Matters and Ordering Clauses

A. Regulatory Flexibility Analysis

As required by Section 603 of the Regulatory Flexibility Act, the Commission has prepared an Initial Regulatory Flexibility Analysis (IRFA) of the expected impact on small entities of the policies and rules proposed in this *Notice.* Written public comments are requested on the IRFA.

Reason for Action: This rulemaking proceeding was initiated to secure comment on a proposal for sharing costs among broadband PCS licensees that will relocate 2 GHz point-to-point microwave licensees currently operating on the spectrum blocks allocated for PCS. This proposal would promote the efficient relocation of microwave licensees by encouraging PCS licensees to relocate entire microwave systems, rather than individual microwave links, thus bringing PCS services to the public in an efficient manner. The Commission has also proposed to clarify the terms ''comparable facilities'' and ''good faith'' negotiations, to clarify some aspects of the twelve-month trial period after relocation, and has proposed to grant all microwave applications for modifications and extensions solely on a secondary basis (with the exception of the minor technical changes listed in the *Notice*).

Objectives: The Commission's objective is to require PCS licensees that benefit from the relocation of a microwave link to contribute to the costs of that relocation. A cost-sharing plan is necessary to enhance the speed of relocation and provide an incentive to PCS licensees to negotiate system-wide relocation agreements with microwave incumbents. This action would result in faster deployment of PCS and delivery of service to the public.

Legal Basis: The proposed action is authorized under the Communications Act, Sections 4(i), 7, 303(c), 303(f), 303(g), 303(r), and 332, 47 U.S.C. §§ 154(i), 303(c), 303(f), 303(g), 303(r), 332, as amended.

Reporting, Recordkeeping, and Other Compliance Requirements: Under the proposal contained in the *Notice,* PCS

licensees that relocate microwave systems would be required to document the relocation costs paid and report them to a central clearinghouse. Later PCS market entrants would then be required to file Prior Coordination Notices with the clearinghouse and, if necessary, reimburse the initial relocating PCS licensee on a *pro rata* basis.

Federal Rules Which Overlap, Duplicate or Conflict With These Rules: None.

Description, Potential Impact, and Number of Small Entities Involved: This proposal would benefit small microwave incumbents by encouraging PCS licensees to relocate entire microwave systems, rather than individual links that interfere with the PCS licensee's operations. Microwave licensees would therefore begin operations on their new channels in an expedited fashion. The 2 GHz fixed microwave bands support a number of industries that provide vital services to the public. The Commission is committed to ensuring that the incumbents' services are not disrupted and that the economic impact of this proceeding on the incumbents is minimal. The Commission must further take into consideration that not all of the incumbent licensees are large businesses, particularly in the bands above 2 GHz, and that many of the licensees are local government entities that are not funded through rate regulation. The Commission believes that this proceeding would further the Commission's policy of encouraging voluntary agreements to relocate fixed microwave facilities to other bands during the two-year period. After evaluating comments filed in response to the *Notice*, the Commission will examine further the impact of all rule changes on small entities and set forth its findings in the Final Regulatory Flexibility Analysis.

Significant Alternatives Minimizing the Impact on Small Entities Consistent with the Stated Objectives: The Commission has reduced burdens wherever possible. The regulatory burdens the Commission has retained are necessary in order to ensure that the public receives the benefits of innovative new services in a prompt and efficient manner. The Commission will continue to examine alternatives in the future with the objectives of eliminating unnecessary regulations and minimizing any significant economic impact on small entities.

IRFA Comments: The Commission requests written public comment on the foregoing Initial Regulatory Flexibility Analysis. Comments must have a separate and distinct heading designating them as responses to the IRFA and must be filed by the comment deadlines set forth in the *Notice.*

B. Paperwork Reduction Act

The Federal Communications Commission, as part of its continuing effort to reduce paperwork burden, invites the general public and other Federal agencies to take this opportunity to comment on the following proposed and/or continuing information collections, as required by the Paperwork Reduction Act of 1995, Public Law 104–13. Comments are requested concerning (a) whether the proposed collection of information is necessary for the proper performance of the functions of the Commission, including whether the information shall have practical utility; (b) the accuracy of the Commission's burden estimates; (c) ways to enhance the quality, utility, and clarity of the information collected; and (d) ways to minimize the burden of the collection of information on the respondents, including the use of automated collection techniques or other forms of information technology.

Dates. Written comments on information collection requirements should be submitted on or before January 2, 1996. If you anticipate that you will be submitting comments but find it difficult to do so within the period of time allowed, you should advise the contact person listed below as soon as possible.

Address. Direct all comments to Dorothy Conway, Federal Communications Commission, Room 234, 1919 M St., N.W., Washington, DC 20554, or via Internet to dconway@fcc.gov; and Timothy Fain, OMB Desk Officer, 10236 NEOB, 725 17th St., N.W., Washington, DC 20503, or via Internet to fain__t@al.eop.gov.

Further Information. For further information contact Dorothy Conway, (202) 418–0217, or via Internet at dconway@fcc.gov.

Supplementary Information:

Title: Amendment to the Commission's Rules Regarding a Plan for Sharing the Costs of Microwave Relocation.

Type of Review: New collection.

Respondents: Personal Communications Service licensees that relocate existing microwave operators, and subsequent Personal Communications Service applicants potentially benefitted by such relocation.

Number of Respondents: Approximately 2,000.

Estimated Time Per Response: 15 minutes for each of approximately 2,000 respondents to photocopy and mail information; 40 hours for an existing or newly-created industry representative to establish and operate clearinghouse.

Total Annual Burden: Approximately 540 hours.

Needs and Uses: The Commission recently initiated a proceeding proposing a plan for sharing the costs of relocating microwave facilities currently operating in the 1850 to 1990 MHz band, which has been allocated for use by broadband Personal Communications Services. Amendment of the Commission's Rules Regarding a Plan for Sharing the Costs of Microwave Relocation, *Notice of Proposed Rule Making,* adopted October 12, 1995. The Commission's *Notice* would establish a mechanism whereby PCS licensees that incur costs to relocate microwave links would receive reimbursement for a portion of those costs from other PCS licensees that also benefit from the resulting clearance of the spectrum.

The *Notice* proposes that once a PCS licensee and a microwave incumbent have signed an agreement with respect to relocation of the microwave licensee, the parties would submit the relocation agreement to an industry-supported clearinghouse. The clearinghouse would maintain a computer database for the purpose of determining the appropriate amount of reimbursement owed to the relocator PCS licensees by subsequent PCS licensees who are benefitted by the relocation. When a subsequent PCS licensee begins the prior coordination notice process already required by Section 21.100(d) of the Commission's rules (*i.e.* proposed frequency usage must be prior coordinated with existing users and previously filed applicants in the area), that licensee would also contact the clearinghouse to determine whether any PCS relocators hold reimbursement rights for the channel over which it intends to transmit. The clearinghouse would then determine whether operation by the new PCS licensee would have caused interference to a relocated microwave facility. If so, the clearinghouse would notify the new licensee of its reimbursement share under a predetermined formula.

Thus, the *Notice* tentatively concludes that if the proposed cost-sharing plan is adopted, it should be administered by an industry-supported clearinghouse rather than by the Commission. PCS licensees that seek reimbursement would be required to submit all applicable data, including contracts, to the clearinghouse. To the extent that disputes cannot be resolved by the clearinghouse, the *Notice* proposes to encourage parties to use expedited alternative dispute resolution

procedures such as binding arbitration, mediation or other techniques. The *Notice* seeks comment on the criteria the Commission should use in designating a clearinghouse, and on how the clearinghouse would be funded. The *Notice* suggests that one funding possibility might be for PCS licensees seeking reimbursement under the cost-sharing plan to pay an administrative fee to the clearinghouse.

The legal authority for this proposed information collection includes 47 U.S.C. Sections 154(i), 303(c), 303(f), 303(g), 303(r) and 332. The information collection would not affect any FCC Forms. The proposed collection would increase minimally the burden on PCS licensees that relocate existing microwave licensees and on future PCS applicants that might have benefited from the relocation by requiring them to file already-existing paperwork with an industry-supported clearinghouse.

C. Ex Parte Rules—Non-Restricted Proceeding

This is a non-restricted notice and comment rulemaking proceeding. *Ex parte* presentations are permitted except during the Sunshine Agenda period, provided they are disclosed as provided in Commission rules, 47 CFR 1.1202, 1.1203, and 1.1206(a).

D. Comment Period

Pursuant to applicable procedures set forth in Sections 1.415 and 1.419 of the Commission's rules, 47 CFR 1.415, 1.419, interested parties may file comments on or before November 30, 1995, and reply comments on or before December 21, 1995. To file formally in this proceeding, you must file an original and four copies of all comments, reply comments, and supporting comments. If you want each Commissioner to receive a personal copy of your comments, you must file an original plus nine copies. You should send comments and reply comments to Office of the Secretary, Federal Communications Commission, Washington, D.C. 20554. Comments and reply comments will be available for public inspection during regular business hours in the Reference Center of the Federal Communications Commission, Room 239, 1919 M Street, N.W., Washington, D.C. 20554. A copy of all comments should also be filed with the Commission's copy contractor, ITS, Inc., 2100 M Street, N.W., Suite 140, (202) 857–3800.

E. Authority

The proposed action is authorized under the Communications Act, Sections 4(i), 7, 303(c), 303(f), 303(g), 303(r), and 332, 47 U.S.C. §§ 154(i), 303(c), 303(f), 303(g), 303(r), 332, as amended.

F. Ordering Clause

It is ordered that, as of the adoption date of the *Notice*, the Commission will continue to accept microwave applications for primary status in the 2 GHz band, however the Commission will process only minor modifications that would not add to the relocation costs of PCS licensees, as described in this *Notice*. This constitutes a procedural change which is not subject to the notice and comment and 30-day effective date requirements of the Administrative Procedure Act. *See Neighborhood TV Co., Inc.* v. *FCC*, 742 F.2d 629 (D.C. Cir. 1984); *Buckeye Cablevision Inc.* v. *United States*, 438 F.2d 948 (6th Cir. 1971). In any event, good cause exists under 5 U.S.C. Section 553(b)(3)(B) and (d)(3), because additional primary site grants in the 2 GHz band will unnecessarily impede the purpose of the current relocation rules and any new relocation rules adopted in this proceeding.

Federal Communications Commission.

William F. Caton,

Acting Secretary.

[FR Doc. 95–27040 Filed 10–31–95; 8:45 am]

BILLING CODE 6712–01–M

Notices

Federal Register
Vol. 60, No. 211
Wednesday, November 1, 1995

This section of the FEDERAL REGISTER contains documents other than rules or proposed rules that are applicable to the public. Notices of hearings and investigations, committee meetings, agency decisions and rulings, delegations of authority, filing of petitions and applications and agency statements of organization and functions are examples of documents appearing in this section.

DEPARTMENT OF AGRICULTURE

Forest Service

Indian River Timber Sale(s), Tongass National Forest, Chatham Area, Sitka and Hoonah Ranger Districts, AK

AGENCY: Forest Service, USDA.

ACTION: Notice of intent.

SUMMARY: The Department of Agriculture, Forest Service will prepare an Environmental Impact Statement to disclose the environmental impacts of proposed actions within the Indian River project area. The proposed action provides for:

(1) Construction of approximately 10.5 miles of new road from a road pool of 23.9 miles, and reconstruction of approximately 23.5 miles of existing road in conjunction with two or more timber sales; (2) harvest of 91 units covering 2,358 acres of timber from a unit pool of 178 units containing 70.7 million board feet net sawlog volume over 3,355 acres, and regeneration of new stands of trees; and (3) re-construction and use of log transfer facilities located at Sunshine Cove (terminus of Forest Development Road 7500) and development of a new log transfer facility in the Ten Mile area (terminus of Forest Development Road 7502). This level of development would result in the harvest of approximately 34 million board feet of sawlog and utility timber volume over a three year period following approval of this document and award of contract(s). The proposed action is one alternative to achieve the purpose and need for the project. A map of the unit and road pool, and proposed action is available from the address provided.

The Forest Service is seeking information and comments from Federal, State, and local agencies as well as individuals and organizations who may be interested in, or affected by, the proposed action.

DATES: Comments concerning the scope of the analysis should be received in writing by December 8, 1995.

ADDRESSES: Send written comments to Indian River Planning Team, USDA Forest Service, 204 Siginaka Way, Sitka, Alaska 99835.

FOR FURTHER INFORMATION CONTACT: Linn W. Shipley, Team Leader, USDA Forest Service, 204 Siginaka Way, Sitka, AK 99835, (907) 747–6671.

SUPPLEMENTARY INFORMATION:

Background

This environmental impact statement will tier to the 1979 Tongass Land Management Plan Environmental Impact Statement, including the 1985–86 and 1991 amendments. The Tongass Land Management Plan provides the overall guidance (Goals, Objectives, Standards, and Management Area direction) to achieve the desired future condition for the area in which the project is proposed.

The Indian River Project Area is located about 56 air miles north of Sitka, Alaska, 22 miles south of Hoonah, Alaska, and 2 miles from Tenakee Springs, Alaska on the northeastern part of Chichagof Island.

The Project Area encompasses all or part of Value Comparison Units 204, 216, 220, 221, and 222 as designated in the Tongass Land Management Plan. These Value Comparison Units are located within Management Areas C29, C30, and C32 as described in the Tongass Land Management Plan. The project area is administered by the Sitka and Hoonah Ranger Districts of the Chatham Area, Tongass National Forest, Alaska.

Purpose and Need for the Proposed Action

The purpose and need for the Indian River project is to implement the Tongass Land Management Plan by making 25 million board feet to 45 million board feet of sawlog and utility timber volume available from the project area; to provide a sustained level of wood products to meet local, national, and international demand; and to improve the timber productivity of the project area. A comparison of the desired future condition for the project area (as identified in the Tongass Land Management Plan) with the existing condition shows the need to convert suitable stands of old-growth timber to managed productive stands capable of long-term timber production. This environmental impact statement may result in two or more timber sales under the independent sale program or in offerings to the Ketchikan Pulp Company under the terms and conditions of its long-term timber sale contract.

Decisions To Be Made

Gary A. Morrison, Forest Supervisor, Chatham Area, is the Responsible Official and will decide whether or not to authorize timber harvest within the Indian River Project Area. He will decide: (1) If the design of the timber sale offerings are consistent with meeting resource protection standards and guidelines in the Tongass Land Management Plan; (2) how much timber volume to make available; (3) the location and design of the collector and local road system needed to develop the project area; (4) the location and design of timber harvest units and log transfer facilities; (5) mitigation and monitoring measures for sound resource management; and (6) whether there may be a significant restriction on subsistence uses, and if so, other determinations required by section 810 of the Alaska National Interest Lands Conservation Act.

Management Objectives

Management objectives that the Proposed Action is designed to address:

1. Ecosystems—Design timber management and associated activities to minimize disturbance in existing ecosystems and maintain viable, well distributed populations of desired vertebrate species. Unit and road designs may include partial harvest prescriptions that imitate natural disturbance patterns, silvicultural thinning plans to maintain structure and plant communities within managed units, and avoidance of sensitive areas within the Project Area.

2. Critical Deer Winter Range—Design timber management and associated activities to minimize disturbance in critical deer winter range within the Project Area.

3. Subsistence—Design timber management and associated activities to maintain opportunities to use subsistence resources by minimizing reductions in the abundance and distribution of harvestable subsistence resources, maintain reasonable access

and use of subsistence resources in an effective and efficient manner, and minimize competition between users within the Project Area.

4. Karst and Cave Resources—Design timber management and associated activities to protect and maintain, to the extent practical, significant caves and karst resources that are vulnerable to disturbance within the Project Area.

5. Social and Economic—Design timber harvest and associated activities to maintain or enhance social and economic values of local residents of Tenakee Springs and nearby communities.

6. Visual—Design timber harvest and associated activities to maintain inventoried visual quality objectives as seen from Tenakee Inlet near the mouth of Indian River, the area known as the mouth of 10-Mile Creek, and the coastline near Tenakee Springs.

7. Cumulative Impacts—Design timber harvest and associated activities to mitigate cumulative resources impacts of this project and other related management activities and adjacent to the Project Area.

Permits

To proceed with the timber harvest as proposed, various permits must be obtained from other agencies. The agencies and their responsibilities are as follows: U.S. Army Corps of Engineers has the responsibility for approval of discharge of dredged or fill materials into the waters of the United States (section 404 of the Clean Water Act), and approval of construction of structures or work in navigable waters of the United States (section 10 of the Rivers and Harbors Act of 1899); the Environmental Protection Agency has responsibility for the National Pollutant Discharge Elimination System review (section 402 of the Clean Water Act). Other agencies which will participate are as follows: State of Alaska, Department of Natural Resources has responsibility for authorization for occupancy and use of tidelands and submerged lands; State of Alaska, Department of Environmental Conservation has responsibility for the Solid Waste Disposal Permit (section 402 of Clean Water Act, (18 ACC 60.230)) and the Certificate of Reasonable Assurance (section 401 of Clean Water Act); U.S. Coast Guard has responsibility for Coast Guard Bridge Permits (in accordance with the General Bridge Act of 1946) required for all structures constructed within the tidal influence zone. Both the Environmental Protection Agency and the U.S. Army Corps of Engineers will participate as cooperating agencies in preparation of the environmental impact statement. We are requesting authorization from the City of Tenakee Springs for use of an existing log transfer facility site located on city-owned tidelands at Sunshine Cove.

Process Steps

Preparation of the environmental impact statement will include the following steps: (1) Public notification and scoping (approximately 45 days beginning on the date of publication of this Notice in the Federal Register;) (2) identification of significant issues related to the proposed action to be analyzed in depth; (3) development of a reasonable range of alternatives to the proposed action which meet the stated purpose and need for the proposed action and address significant issues; and (4) identification of the potential environmental effects of the alternatives.

For step 1, scoping announcements will be published during the week of October 29, 1995 in the *Juneau Empire* and *Sitka Daily Sentinel*, and copies of the announcement will be mailed to interested persons. This announcement will describe the timing and location of the proposed project and will request comments. It will also contain specific information about the location and timing of public involvement meetings. Scoping meetings will be held in Tenakee Springs, Angoon, and Hoonah, Alaska in November 1995.

For step 2, the Interdisciplinary Team will review comments received during the scoping period to determine issues which are significant and within the scope of this project.

Step 3 will consider a range of alternatives developed to address significant issues. One of these will be the ''No Action'' alternative, in which there is no harvest or road building activity. Other alternatives may consider various levels and locations of harvest and regeneration in response to issues and non-timber objectives.

In step 4, the direct, indirect, and cumulative effects of each alternative will be analyzed and documented. In addition, site specific mitigation measures for each alternative will be identified and their effectiveness evaluated.

Public Participation Encouraged

In addition to commenting on the proposed action and the Draft Environmental Impact Statement when it is released, agencies and other interested persons or groups are invited to contact Forest Service officials at any time during the planning process.

The Draft Environmental Impact Statement is expected to be filed with the Environmental Protection Agency in June 1996. The comment period on the Draft Environmental Impact Statement will be 45 days from the date the Environmental Protection Agency publishes the notice of availability in the Federal Register.

The Forest Service believes, at this early stage, it is important to give reviewers notice of several court rulings related to public participation in the environmental review process. First, reviewers of draft environmental impact statements must structure their participation in the environmental review of the proposal so that it is meaningful and alters an agency to the reviewer's position and contentions; *Vermont Yankee Nuclear Power Corp.* v. *NRDC, 435 U.S. 519, 553 (1978).* Also, environmental objections that could be raised at the Draft Environmental Impact Statement stage but that are not raised until after completion of the Final Environmental Impact Statement may be waived or dismissed by the courts; *City of Angoon* v. *Hodel,* 803 F.2d 1016, 1022 (9th Cir. 1986) and *Wisconsin Heritages, Inc.* v. *Harris,* 490 F. Supp. 1334, 1338 (E.D. Wis. 1980). Because of these court rulings, it is important that those interested in this proposed action participate by the close of the 45 day comment period so that substantive comments and objections are made available to the Forest Service at a time when it can meaningfully consider and respond to them in the Final Environmental Impact Statement.

To assist the Forest Service in identifying and considering issues and concerns on the proposed action, comments on the Draft Environmental Impact Statement should be as specific as possible. It is also helpful if comments refer to specific pages or chapters of the Draft Environmental Impact Statement. Comments may also address the adequacy of the Draft Environmental Impact Statement or the merits of the alternatives formulated and discussed in the document. Reviewers may wish to refer to the Council on Environmental Quality Regulations for implementing the procedural provisions of the National Environmental Policy Act, 40 CFR 1503.3, in addressing these points.

The Final Environmental Impact Statement and Record of Decision is expected to be released in December 1996. The Forest Supervisor for the Chatham Area of the Tongass National Forest will, as the responsible official for the environmental impact statement, make a decision regarding this proposal considering the comments, responses,

and environmental consequences discussed in the Final Environmental Impact Statement, and applicable laws, regulations, and policies. The decision and supporting reasons will be documented in the Record of Decision.

Gary A. Morrison,

Forest Supervisor.

[FR Doc. 95–26985 Filed 10–31–95; 8:45 am]

BILLING CODE 3410–11–M

Ecological Stewardship Workshop

AGENCY: Forest Service, USDA.

ACTION: Notice of meeting.

SUMMARY: The Forest Service, in partnership with other Federal agencies, private foundations, industry associations, and environmental groups, is holding a workshop in Tucson, Arizona, entitled ''Toward a Scientific and Social Framework for Ecologically Based Stewardship of Federal Lands and Water.'' The workshop is a working meeting of scientists and land managers who will be discussing the scientific basis and implementation options for an ecologically based approach to stewardship. Participation in the workshop is open to the public but, due to spatial constraints, is limited to the first 50 individuals who register. Persons who wish to register for the workshop must request registration materials from the Forest Service and send a completed registration form with the required fee to the University of Arizona.

DATES: The deadline for registration for the workshop is November 15, 1995. The workshop will be held December 4–15, 1995.

ADDRESSES: Send written requests for registration materials and additional information to Shirley Henson, c/o Ecological Stewardship Workshop, Forest Service, USDA, Ecosystem Management Staff—3C, P.O. Box 96090, Washington, DC 20090–6090.

FOR FURTHER INFORMATION CONTACT:

For information about the workshop contact Shirley Henson, telephone: (202) 205–0884.

Dated: October 27, 1995.

David G. Unger,

Associate Chief.

[FR Doc. 95–27117 Filed 10–31–95; 8:45 am]

BILLING CODE 3410–11–M

ARCHITECTURAL AND TRANSPORTATION BARRIERS COMPLIANCE BOARD

Meeting

AGENCY: Architectural and Transportation Barriers Compliance Board.

ACTION: Notice of meeting.

SUMMARY: The Architectural and Transportation Barriers Compliance Board (Access Board) has scheduled its regular business meetings to take place in Arlington, Virginia on Tuesday and Wednesday, November 14–15, 1995 at the times and location noted below.

DATES: The schedule of events is as follows:

Tuesday, November 14, 1995

9:00 AM–10:30 AM Briefing on Rulemaking Process and Federal Facilities Guidelines (Closed Session)

10:45 AM–12:00 Noon Planning and Budget Committee

1:30 PM–3:15 PM Vision Statement Work Group

3:30 PM–5:00 PM Technical Programs Committee

Wednesday, November 15, 1995

9:00 AM–12:00 Noon Ad Hoc Commitee on Bylaws and Statutory Review

1:30 PM–3:30 PM Board Meeting

ADDRESSES: The meetings will be held at: Sheraton Crystal City Hotel, 1800 Jefferson Davis Highway, Arlington, Virginia.

FOR FURTHER INFORMATION CONTACT: For further information regarding the meetings, please contact Lawrence W. Roffee, Executive Director, (202) 272–5434 ext. 714 (voice) and (202) 272–5449 (TTY).

SUPPLEMENTARY INFORMATION: At the Board meeting, the Access Board will consider the following agenda items:

- Approval of the Minutes of the July 12 and September 14 Board Meetings
- Executive Director's Report
- Vision Statement Work Group Report
- Ad Hoc Committee on Bylaws and Statutory Review Report
- Fiscal Year 1996 Spending Plan
- Fiscal Year 1997 Budget Request
- Fiscal Years 1994 and 1995 Research Projects Status
- Fiscal Year 1996 Research Planning

All meetings are accessible to persons with disabilities. Sign language interpreters and an assistive listening system are available at all meetings.

Lawrence W. Roffee,

Executive Director.

[FR Doc. 95–27104 Filed 10–31–95; 8:45 am]

BILLING CODE 8150–01–M

DEPARTMENT OF COMMERCE

International Trade Administration

Antidumping or Countervailing Duty Order, Finding, or Suspended Investigation; Opportunity To Request Administrative Review

AGENCY: Import Administration, International Trade Administration, Department of Commerce.

ACTION: Notice of Opportunity to Request Administrative Review of Antidumping or Countervailing Duty Order, Finding, or Suspended Investigation.

BACKGROUND: Each year during the anniversary month of the publication of an antidumping or countervailing duty order, finding, or suspension of investigation, an interested party, as defined in section 771(9) of the Tariff Act of 1930, as amended, may request, in accordance with section 353.22 or 355.22 of the Department of Commerce (the Department) Regulations (19 CFR 353.22/355.22 (1993)), that the Department conduct an administrative review of that antidumping or countervailing duty order, finding, or suspended investigation.

OPPORTUNITY TO REQUEST A REVIEW: Not later than November 30, 1995, interested parties may request administrative review of the following orders, findings, or suspended investigations, with anniversary dates in November for the following periods:

	Period
Antidumping Duty Proceedings	
Argentina: Barbed Wire and Barbless Fencing Wire (A–357–405)	11/01/94–10/31/95
Argentina: Carbon Steel Wire Rods (A–357–007)	11/01/94–10/31/95
Brazil: Circular Welded Non-Alloy Steel Pipe (A–351–809)	11/01/94–10/31/95
Germany: Drycleaning Machinery (A–428–037)	11/01/94–10/31/95
Japan: Bicycle Speedometers (A–588–038)	11/01/94–10/31/95
Japan: Light Scattering Instruments	11/01/94–10/31/95

	Period
(A–588–813)	
Japan: Titanium Sponge (A–588–020)	11/01/94–10/31/95
Korea: Circular Welded Non-Alloy Steel Pipe (A–580–809)	11/01/94–10/31/95
Mexico: Circular Welded Non-Alloy Steel Pipe (A–201–805)	11/01/94–10/31/95
Singapore: Rectangular Pipes and Tubes (A–559–502)	11/01/94–10/31/95
Taiwan: Circular Welded Non-Alloy Steel Pipe (A–583–814)	11/01/94–10/31/95
The People's Republic of China: Fresh Garlic (A–570–831)	07/11/94–10/31/95
The People's Republic of China: Certain Paper Clips (A–570–826)	05/18/94–10/31/95
The People's Republic of China: Tungsten Ore Concentrates (A–570–909)	11/01/94–10/31/95
Venezuela: Circular Welded Non-Alloy Steel Pipe (A–307–805)	11/01/94–10/31/95
Suspension Agreements	
Japan: Small Electric Motors (A–588–090)	11/01/94–10/31/95
Singapore: Refrigeration Compressors (C–559–401)	04/01/94–03/31/95
Ukraine: Siliconmanganese (A–844–802)	06/17/94–11/30/95
Countervailing Duty Proceedings	
Argentina: Oil Country Tubular Goods (C–357–403)	01/01/94–12/31/94

In accordance with sections 353.22(a) and 355.22(a) of the regulations, an interested party as defined by section 353.2(k) may request in writing that the Secretary conduct an administrative review. The Department has changed its requirements for requesting reviews for countervailing duty orders. Pursuant to 19 C.F.R. 355.22(a) of the Department's Interim Regulations (60 FR 25137 (May 11, 1995)), an interested party must specify the individual producers or exporters covered by the order for which they are requesting a review. Therefore, for both antidumping and countervailing duty reviews, the interested party must specify for which individual producers or exporters covered by an antidumping finding or an antidumping or countervailing duty order it is requesting a review, and the requesting party must state why it desires the Secretary to review those particular producers or exporters. If the interested party intends for the Secretary to review sales of merchandise by an exporter (or a producer if that producer also exports merchandise from other suppliers) which were produced in more than one country of origin, and each country of origin is subject to a separate order, then the interested party must state specifically, on an order-by-order basis, which exporter(s) the request is intended to cover.

Seven copies of the request should be submitted to the Assistant Secretary for Import Administration, International Trade Administration, Room B–099, U.S. Department of Commerce, Washington, D.C. 20230. The Department also asks parties to serve a copy of their requests to the Office of Antidumping Compliance, Attention: Pamela Woods, in room 3065 of the main Commerce Building. Further, in accordance with section 353.3l(g) or 355.3l(g) of the regulations, a copy of each request must be served on every party on the Department's service list.

The Department will publish in the Federal Register a notice of ''Initiation of Antidumping (Countervailing) Duty Administrative Review,'' for requests received by November 30, 1995. If the Department does not receive, by November 30, 1995, a request for review of entries covered by an order or finding listed in this notice and for the period identified above, the Department will instruct the Customers Service to assess antidumping or countervailing duties on those entries at a rate equal to the cash deposit of (or bond for) estimated antidumping or countervailing duties required on those entries at the time of entry, or withdrawal from warehouse, for consumption and to continue to collect the cash deposit previously ordered.

This notice is not required by statute, but is published as a service to the international trading community.

Dated: October 30, 1995.

Joseph A. Spetrini,

Deputy Assistant Secretary for Compliance.

[FR Doc. 95–27242 Filed 10–31–95; 8:45 am]

BILLING CODE 3510–DS–M

Intent To Revoke Antidumping Duty Orders and Findings and To Terminate Suspended Investigations

AGENCY: Import Administration, International Trade Administration, Department of Commerce.

ACTION: Notice of Intent to Revoke Antidumping Duty Orders and Findings and to Terminate Suspended Investigations.

SUMMARY: The Department of Commerce (the Department) is notifying the public of its intent to revoke the antidumping duty orders and findings and to terminate the suspended investigations listed below. Domestic interested parties who object to these revocations and terminations must submit their comments in writing no later than the last day of November 1995.

EFFECTIVE DATE: November 1, 1995.

FOR FURTHER INFORMATION CONTACT: Michael Panfeld or the analyst listed under Antidumping Proceeding at: Office of Antidumping Compliance, Import Administration, International Trade Administration, U.S. Department of Commerce, 14th Street & Constitution Avenue, N.W., Washington, D.C. 20230, telephone (202) 482–4737.

SUPPLEMENTARY INFORMATION:

Background

The Department may revoke an antidumping duty order or finding or terminate a suspended investigation if the Secretary of Commerce concludes that it is no longer of interest to interested parties. Accordingly, as required by § 353.25(d)(4) of the Department's regulations, we are notifying the public of our intent to revoke the following antidumping duty orders and findings and to terminate the suspended investigations for which the Department has not received a request to conduct an administrative review for the most recent four consecutive annual anniversary months:

Antidumping Proceeding

Argentina

Barbed Wire & Barbless Fencing Wire
A–357–405
50 FR 46808
November 13, 1985
Contact: Tom Killiam at (202) 482–2704

Argentina

Carbon Steel Wire Rods
A–357–007
49 FR 46180
November 23, 1984
Contact: Tom Killiam at (202) 482–2704

Germany

Dry Cleaning Machinery
A–428–037
37 FR 23715
November 8, 1972
Contact: Art DuBois at (202) 482–6312

Singapore

Light-Walled Rectangular Pipe & Tube

A–559–502

51 FR 41142

November 13, 1986

Contact: Tom Killiam at (202) 482–0665

Japan

Certain Small Electric Motors of 5 to 150 Horsepower

A–588–090

45 FR 73723

November 6, 1980

Contact: Nancy Decker at (202) 482–5811

If no interested party requests an administrative review in accordance with the Department's notice of opportunity to request administrative review, and no domestic interested party objects to the Department's intent to revoke or terminate pursuant to this notice, we shall conclude that the antidumping duty orders, findings, and suspended investigations are no longer of interest to interested parties and shall proceed with the revocation or termination.

Opportunity To Object

Domestic interested parties, as defined in § 353.2(k)(3), (4), (5), and (6) of the Department's regulations, may object to the Department's intent to revoke these antidumping duty orders and findings or to terminate the suspended investigations by the last day of November 1995. Any submission to the Department must contain the name and case number of the proceeding and a statement that explains how the objecting party qualifies as a domestic interested party under § 353.2(k)(3), (4), (5), and (6) of the Department's regulations.

Seven copies of such objections should be submitted to the Assistant Secretary for Import Administration, International Trade Administration, Room B–099, U.S. Department of Commerce, Washington, D.C. 20230. You must also include the pertinent certification(s) in accordance with § 353.31(g) and § 353.31(i) of the Department's regulations. In addition, the Department requests that a copy of the objection be sent to Michael F. Panfeld in Room 4203. This notice is in accordance with 19 CFR 353.25(d)(4)(i).

Dated: October 27, 1995.

Holly A. Kuga,

Acting Deputy Assistant Secretary for Compliance.

[FR Doc. 95–27145 Filed 10–31–95; 8:45 am]

BILLING CODE 3510–DS–P

[C–357–404]

Certain Textile Mill Products From Argentina; Notice of Scope Amendment

AGENCY: Import Administration, International Trade Administration, Department of Commerce.

ACTION: Certain Textile Mill Products from Argentina: Notice of Amendment to the Existing Conversion of the Scope of the Order from the Tariff Schedules of the United States Annotated to the Harmonized Tariff Schedule.

SUMMARY: On January 1, 1989, the United States fully converted to the international harmonized system of tariff classification. On January 11, 1989, the Department of Commerce (the Department) published the *Conversion to Use of the Harmonized Tariff Schedule of Classifications for Antidumping and Countervailing Duty Proceedings* (54 FR 993; January 11, 1989) (1989 Conversion) for all antidumping and countervailing duty orders in effect or investigations in progress as of January 1, 1989. On November 2, 1994, the Department published a proposed amendment to the conversion (59 FR 54887). Interested parties were invited to comment on this proposed amended conversion. The Department also requested the U.S. Customs Department to comment on the proposed amendment to the conversion. Based on the analysis of the comments received, the Department is now publishing an amended conversion of the scope of the countervailing duty order on certain textile mill products from Argentina.

EFFECTIVE DATE: November 1, 1995.

FOR FURTHER INFORMATION CONTACT: Anne D'Alauro or Kelly Parkhill, Office of Countervailing Compliance, Import Administration, International Trade Administration, U.S. Department of Commerce, 14th Street and Constitution Avenue, Washington, DC 20230, telephone (202) 482–2786.

SUPPLEMENTARY INFORMATION:

Background

In 1985, the Department issued a countervailing duty order on Certain Textile Mill Products from Argentina (C–357–404) (50 FR 9846; March 12, 1985). The scope of this order was originally defined solely in terms of the Tariff Schedules of the United States Annotated (TSUSA) item numbers; no narrative product description was provided. On January 1, 1989, the United States fully converted from the TSUSA to the Harmonized Tariff Schedule (HTS). Section 1211 of the Omnibus Trade and Competitiveness Act of 1988 directed the Department to ''take whatever actions are necessary to conform, to the fullest extent practicable, with the tariff classification system of the Harmonized Tariff Schedule [for] all * * * orders * * *'' in effect at the time of the implementation of the HTS.

Accordingly, on January 11, 1989, after reviewing comments received from the public, the Department published the 1989 Conversion for all antidumping and countervailing duty orders in effect or investigations in progress as of January 1, 1989 (54 FR 993). The notice also included the conversion of the scope of the referenced textile mill product order from TSUSA to HTS item numbers. The 1989 Conversion was based on a one-to-one correspondence of the TSUSA and HTS item numbers. In the notice, the Department stated that the conversion could be amended, as warranted, at any time during the applicable proceeding as a result of the submission of comments or new factual information.

As a result of comments submitted to the Department by the importing public and advice received from the U.S. Customs Service, the Department determined that the 1989 Conversion did not accurately reflect the scope of the countervailing duty order on Certain Textile Mill Products from Argentina and, therefore, that the conversion should be amended. On November 2, 1994, the Department published a proposed amendment to the 1989 Conversion and invited interested parties to comment (59 FR 54887). The Department also requested comments on the proposed coversion from the U.S. Customs Service.

Based on our analysis of the comments received, the Department has amended the 1989 Conversion governing the countervailing duty order on certain textile mill products from Argentina. The HTS numbers included in this order are listed in the attached Appendix.

Analysis of Comments Received

Based on comments received from the U.S. Customs Service, we are making the following changes to the HTS-defined scope, as published on November 2, 1994 (59 FR 54887) so that it better reflects the original TSUSA-defined scope of this countervailing duty order:

1. We are replacing the broader HTS subheading 6302.60.00 with the more specific HTS subheadings: 6302.60.0010, 6302.60.0020, 6302.91.0005, and 6302.91.0050.

2. We are adding HTS subheadings 5111.90.90 and 5112.90.90.

Instructions to Customs

The Department will instruct the U.S. Customs Service to liquidate without regard to countervailing duties all unliquidated entries of certain textile mill products from Argentina not covered by the attached Appendix that were exported from Argentina on or after November 9, 1992. The Department will also instruct the U.S. Customs Service to liquidate at the appropriate countervailing duty rate all unliquidated entries of the subject merchandise covered in the attached Appendix that were exported on or after November 9, 1992, and on or before December 31, 1993. With the finalization of this scope coversion, the Department can now evaluate the merits of a standing issue affecting merchandise exported on or after January 1, 1994, which entered on or before December 31, 1994. Pending that determination, merchandise covered by the order exported on or after January 1, 1994, which entered on or before December 31, 1994, will remain suspended.

In addition, since this order was revoked effective January 1, 1995 (*See Revocation of Countervailing Duty Orders* (60 FR 40568; August 9, 1995)), the Customs Service has terminated the suspension of liquidation for all entries, and withdrawals from warehouse, of certain textile mill products from Argentina made on or after January 1, 1995.

Dated: October 23, 1995.

Joseph A. Spetrini,

Deputy Assistant Secretary for Compliance.

Appendix: Proposed Amended HTS List for Certain Textile Mill Products From Argentina (C–357–404)

5111.1170, 5111.1960 [1], 5111.2090, 5111.3090, 5111.9090, 5112.1120, 5112.1990 [1], 5112.2030, 5112.3030, 5112.9090, 5205.1110, 5205.1210, 5205.1310, 5205.1410, 5205.2400 [2], 5205.3100, 5205.3200, 5205.3300, 5207.1000, 5207.9000, 5407.9105, 5407.9205, 5407.9305, 5407.9405 5515.1305, 5515.1310, 5801.3600, 6302.600010, 6302.600020, 6302.910005, 6302.910050, 6305.2000, 6305.9000.

[FR Doc. 95–26973 Filed 10–31–95; 8:45 am]

BILLING CODE 3510–DS–P

[1] Coverage limited to fabric, valued not over $19.84/kg.

[2] Coverage limited to yarn, not exceeding 68 nm.

National Oceanic and Atmospheric Administration

[I.D. 102395E]

Western Pacific Fishery Management Council; Public Meeting

AGENCY: National Marine Fisheries Service (NMFS), National Oceanic and Atmospheric Administration (NOAA), Commerce.

ACTION: Notice of public meeting.

SUMMARY: The Western Pacific Fishery Management Council's Hawaii Pelagics Advisory Panel (Panel) will hold a meeting.

DATES: The meeting will be held November 15, 1995, from 9:00 a.m. to 5:00 p.m.

ADDRESSES: The meeting will be held at the Executive Centre Hotel, 1088 Bishop St., Rm. 4003, Honolulu, HI.

Council address: Western Pacific Fishery Management Council, 1164 Bishop St., Suite 1405, Honolulu, HI 96813.

FOR FURTHER INFORMATION CONTACT: Kitty M. Simonds, Executive Director; telephone: 808–522–8220.

SUPPLEMENTARY INFORMATION: The Panel will review the report and recommendations of the Council's ad hoc Small Boat Pelagic Fisheries Working Group, including recommendations concerning the Hawaiian Islands humpback whale sanctuary, and complete any other business as required. It may make recommendations to the Council.

Special Accommodations

This meeting is physically accessible to people with disabilities. Requests for sign language interpretation or other auxiliary aids should be directed to Kitty M. Simonds, 808–522–8220 (voice) or 808–522–8226 (fax), at least 5 days prior to meeting date.

Dated: October 25, 1995.

Richard W. Surdi,

Acting Director, Office of Fisheries Conservation and Management, National Marine Fisheries Service.

[FR Doc. 95–27028 Filed 10–31–95; 8:45 am]

BILLING CODE 3510–22–F

[I.D. 102395F]

Western Pacific Fishery Management Council; Public Meeting

AGENCY: National Marine Fisheries Service (NMFS), National Oceanic and Atmospheric Administration (NOAA), Commerce.

ACTION: Notice of public meeting.

SUMMARY: The Western Pacific Fishery Management Council's Hawaii Bottomfish Advisory Panel, Hawaii Bottomfish Plan Team, and Bottomfish Advisory Review Board will meet jointly.

DATES: The meeting will be held on November 16, 1995, from 9:00 a.m. to 5:00 p.m.

ADDRESSES: The meeting will be held at the Executive Centre Hotel, 1088 Bishop St., Rm. 4003, Honolulu, HI

Council address: Western Pacific Fishery Management Council, 1164 Bishop St., Suite 1405, Honolulu, HI 96813.

FOR FURTHER INFORMATION CONTACT: Kitty M. Simonds, Executive Director; telephone: 808–522–8220.

SUPPLEMENTARY INFORMATION: The following topics will be discussed, and the group may make recommendations to the Council:

1. Review of present Northwestern Hawaiian Islands (NWHI) bottomfish management system.
2. Review of present status of NWHI bottomfish stocks and fishery.
3. Possible options to modify management system.
4. Review of previous comments and recommendations on proposed modifications.
5. Discuss management options.
6. Other business as required.

Special Accommodations

This meeting is physically accessible to people with disabilities. Requests for sign language interpretation or other auxiliary aids should be directed to Kitty M. Simonds, 808–522–8220 (voice) or 808–522–8226 (fax), at least 5 days prior to meeting date.

Dated: October 25, 1995.

Richard W. Surdi,

Acting Director, Office of Fisheries Conservation and Management, National Marine Fisheries Service.

[FR Doc. 95–27029 Filed 10–31–95; 8:45 am]

BILLING CODE 3510–22–F

[I.D. 100595B]

Marine Mammals

AGENCY: National Marine Fisheries Service (NMFS), National Oceanic and Atmospheric Administration (NOAA), Commerce.

ACTION: Issuance of scientific research permit no. 969 (P524B).

SUMMARY: Notice is hereby given that Dr. Shannon Atkinson and Mr. James Palmer, University of Hawaii at Manoa, Honolulu, HI 96822, have been issued a permit to obtain blood and blubber

samples and to import samples from various species of cetaceans, for the purpose of scientific research.

ADDRESSES: The permit is available for review by interested persons in the following offices by appointment:

Permits Division, Office of Protected Resources, NMFS, 1315 East-West Highway, Room 13130, Silver Spring, MD 20910 (301/713–2289);

Director, Northeast Region, NMFS, One Blackburn Drive, Gloucester, MA 01930–2298 (508/281–9250);

Director, Southeast Region, NMFS, 9721 Executive Center Drive North, St. Petersburg, FL 33702–2432 (813/893–3141);

Director, Northwest Region, NMFS, 7600 Sand Point Way, NE, BIN C15700, Bldg. 1, Seattle, WA, 98115–0070 (206/526–6150);

Director, Southwest Region, NMFS, 501 West Ocean Blvd., Suite 4200, Long Beach, CA 90802–4213 (310/980–4001);

Director, Alaska Region, NMFS, P.O. Box 21668, Juneau, AK 99802–1668 (907/586–7221); and

Coordinator, Pacific Area Office, NMFS, 2570 Dole Street Honolulu, HI 96822–2396 (808/955–8831).

FOR FURTHER INFORMATION CONTACT: Ruth Johnson (301/713–2289).

SUPPLEMENTARY INFORMATION: On May 24, 1995, notice was published in the Federal Register (60 FR 27493) that a permit had been requested by the above-named individuals. The requested permit has been granted under the authority of the Marine Mammal Protection Act of 1972, as amended (16 U.S.C. 1361 *et seq.*), the Regulations Governing the Taking and Importing of Marine Mammals (50 CFR part 216), the Endangered Species Act of 1973 (ESA), as amended (16 U.S.C. 1531 *et seq.*), and the regulations governing the taking, importing, and exporting of endangered fish and wildlife (50 CFR part 222).

The permit authorizes the holder to obtain blood serum and blubber samples from cetaceans taken in subsistence hunting, and incidental, stranded and captive mortalities. The applicant is also authorized to import blood and blubber samples as well as utilize bowhead whale samples in storage at the National Marine Mammal Lab.

Issuance of this permit, as required by the ESA, was based on a finding that such permit: (1) Was applied for in good faith; (2) will not operate to the disadvantage of the endangered species that is the subject of this permit; and (3) is consistent with the purposes and policies set forth in section 2 of the ESA.

Dated: October 23, 1995.

Ann D. Terbush,

Chief, Permits & Documentation Division, Office of Protected Resources, National Marine Fisheries Service.

[FR Doc. 95–27026 Filed 10–31–95; 8:45 am]

BILLING CODE 3510–22–F

COMMITTEE FOR THE IMPLEMENTATION OF TEXTILE AGREEMENTS

Adjustment of an Import Limit for Certain Man-Made Fiber Textile Products Produced or Manufactured in the People's Republic of China

October 26, 1995.

AGENCY: Committee for the Implementation of Textile Agreements (CITA).

ACTION: Issuing a directive to the Commissioner of Customs increasing a limit.

EFFECTIVE DATE: November 2, 1995.

FOR FURTHER INFORMATION CONTACT: Jennifer Aldrich, International Trade Specialist, Office of Textiles and Apparel, U.S. Department of Commerce, (202) 482–4212. For information on the quota status of this limit, refer to the Quota Status Reports posted on the bulletin boards of each Customs port or call (202) 927–6703. For information on embargoes and quota re-openings, call (202) 482–3715.

SUPPLEMENTARY INFORMATION:

Authority: Executive Order 11651 of March 3, 1972, as amended; section 204 of the Agricultural Act of 1956, as amended (7 U.S.C. 1854).

The current limit for Category 642 is being increased for carryforward. As a result, the limit which is currently filled, will re-open.

A description of the textile and apparel categories in terms of HTS numbers is available in the CORRELATION: Textile and Apparel Categories with the Harmonized Tariff Schedule of the United States (see Federal Register notice 59 FR 65531, published on December 20, 1994). Also see 59 FR 65760, published on December 21, 1994.

The letter to the Commissioner of Customs and the actions taken pursuant to it are not designed to implement all of the provisions of the bilateral agreement, but are designed to assist only in the implementation of certain of its provisions.

William Dulka,

Acting Chairman, Committee for the Implementation of Textile Agreements.

Committee for the Implementation of Textile Agreements

October 26, 1995.

Commissioner of Customs,
Department of the Treasury, Washington, DC 20229.

Dear Commissioner: This directive amends, but does not cancel, the directive issued to you on December 16, 1994, by the Chairman, Committee for the Implementation of Textile Agreements. That directive concerns imports of certain cotton, wool, man-made fiber, silk blend and other vegetable fiber textile products, produced or manufactured in the People's Republic of China and exported during the twelve-month period which began on January 1, 1995 and extends through December 31, 1995.

Effective on November 2, 1995, you are directed to amend further the directive dated December 16, 1994 to increase the limit for Category 642 to 300,274 dozen [1], as provided under the terms of the bilateral agreement between the Governments of the United States and the People's Republic of China.

The Committee for the Implementation of Textile Agreements has determined that this action falls within the foreign affairs exception to the rulemaking provisions of 5 U.S.C. 553(a)(1).

Sincerely,

William Dulka,

Acting Chairman, Committee for the Implementation of Textile Agreements.

[FR Doc. 95–27039 Filed 10–31–95; 8:45 am]

BILLING CODE 3510–DR–F

Adjustment of Import Limits for Certain Cotton, Wool and Man-Made Fiber Textile Products Produced or Manufactured in Costa Rica

October 26, 1995.

AGENCY: Committee for the Implementation of Textile Agreements (CITA).

ACTION: Issuing a directive to the Commissioner of Customs adjusting limits.

EFFECTIVE DATE: November 2, 1995.

FOR FURTHER INFORMATION CONTACT: Jennifer Aldrich, International Trade Specialist, Office of Textiles and Apparel, U.S. Department of Commerce, (202) 482–4212. For information on the quota status of these limits, refer to the Quota Status Reports posted on the bulletin boards of each Customs port or call (202) 927–5850. For information on embargoes and quota re-openings, call (202) 482–3715.

[1] The limit has not been adjusted to account for any imports exported after December 31, 1994.

SUPPLEMENTARY INFORMATION:

Authority: Executive Order 11651 of March 3, 1972, as amended; section 204 of the Agricultural Act of 1956, as amended (7 U.S.C. 1854).

The current limit for Category 443 is being increased by application of swing, reducing the limit for Categories 342/642 to account for the increase.

A description of the textile and apparel categories in terms of HTS numbers is available in the CORRELATION: Textile and Apparel Categories with the Harmonized Tariff Schedule of the United States (see Federal Register notice 59 FR 65531, published on December 20, 1994). Also see 59 FR 62615, published on December 6, 1994; and 60 FR 17320, published on April 5, 1995.

The letter to the Commissioner of Customs and the actions taken pursuant to it are not designed to implement all of the provisions of the Uruguay Round Agreements Act and the Uruguay Round Agreement on Textiles and Clothing, but are designed to assist only in the implementation of certain of their provisions.

William Dulka,

Acting Chairman, Committee for the Implementation of Textile Agreements.

Committee for the Implementation of Textile Agreements

October 26, 1995.

Commissioner of Customs,
Department of the Treasury, Washington, DC 20229.

Dear Commissioner: This directive amends, but does not cancel, the directive issued to you on November 29, 1994, as amended on March 30, 1995, by the Chairman, Committee for the Implementation of Textile Agreements. That directive concerns imports of certain cotton, wool and man-made fiber textile products, produced or manufactured in Costa Rica and exported during the twelve-month period which began on January 1, 1995 and extends through December 31, 1995.

Effective on November 2, 1995, you are directed to adjust the limits for the following categories, as provided for under the Uruguay Round Agreements Act and the Uruguay Round Agreement on Textiles and Clothing:

Category	Adjusted twelve-month limit [1]
342/642	335,303 dozen.
443	228,030 numbers.

[1] The limits have not been adjusted to account for any imports exported after December 31, 1994.

The guaranteed access levels for the foregoing categories remain unchanged.

The Committee for the Implementation of Textile Agreements has determined that these actions fall within the foreign affairs exception to the rulemaking provisions of 5 U.S.C. 553(a)(1).

Sincerely,

William Dulka,

Acting Chairman, Committee for the Implementation of Textile Agreements.

[FR Doc. 95–27038 Filed 10–31–95; 8:45 am]

BILLING CODE 3510–DR–F

DEPARTMENT OF DEFENSE

Office of the Secretary

Meeting of the DOD Advisory Group on Electron Devices

AGENCY: Department of Defense, Advisory Group on Electron Devices.

ACTION: Notice.

SUMMARY: The DoD Advisory Group on Electron Devices (AGED) announces a closed session meeting.

DATES: The meeting will be held at 0900, Tuesday, 14 November 1995.

ADDRESSES: The meeting will be held at Palisades Institute for Research Services, Inc., 1745 Jefferson Davis Highway, Crystal Square Four, Suite 500, Arlington, Virginia.

FOR FURTHER INFORMATION CONTACT: Mr. Eliot Cohen, AGED Secretariat, 1745 Jefferson Davis Highway, Crystal Square Four, Suite 500, Arlington, Virginia 22202.

SUPPLEMENTARY INFORMATION: The mission of the Advisory Group is to provide advice to the Under Secretary of Defense for Acquisition and Technology, to the Director of Defense Research and Engineering (DDR&E), and through the DDR&E to the Director, Advanced Research Projects Agency and the Military Departments in planning and managing an effective and economical research and development program in the area of electron devices.

The AGED meeting will be limited to review of research and development programs which the Military Departments propose to initiate with industry, universities or in their laboratories. The agenda for this meeting will include programs on Radiation Hardened Devices, Microwave Tubes, Displays and Lasers. The review will include details of classified defense programs throughout.

In accordance with Section 10(d) of Pub. L. No. 92–463, as amended, (5 U.S.C. App. II § 10(d) (1988)), it has been determined that this Advisory Group meeting concerns matters listed in 5 U.S.C. § 552b(c)(1) (1988), and that accordingly, this meeting will be closed to the public.

Dated: October 27, 1995.

L.M. Bynum,

Alternate, OSD Federal Register Liaison Officer, Department of Defense.

[FR Doc. 95–27109 Filed 10–31–95; 8:45 am]

BILLING CODE 5000–04–M

Meeting of the DOD Advisory Group on Electron Devices

AGENCY: Department of Defense, Advisory Group on Electron Devices.

ACTION: Notice.

SUMMARY: Working Group A (Microwave Devices) of the DoD Advisory Group on Electron Devices (AGED) announces a closed session meeting.

DATES: The meeting will be held on 0900, Wednesday, November 15, 1995.

ADDRESSES: The meeting will be held at Palisades Institute for Research Services, Inc., 1745 Jefferson Davis Highway, Crystal Square Four, Suite 500, Arlington, Virginia.

FOR FURTHER INFORMATION CONTACT: Walter Gelnovatch, AGED Secretariat, 1745 Jefferson Davis Highway, Crystal Square Four, Suite 500, Arlington, VA 22202.

SUPPLEMENTARY INFORMATION: The mission of the Advisory Group is to provide advice to the Under Secretary of Defense for Acquisition and Technology, to the Director of Defense Research and Engineering (DDR&E), and through the DDR&E to the Director, Advanced Research Projects Agency (ARPA) and the Military Departments in planning and managing an effective and economical research and development program in the area of electron devices.

The Working Group A meeting will be limited to review of research and development programs which the Military Departments propose to initiate with industry, universities or in their laboratories. This microwave device area includes programs on developments and research related to microwave tubes, solid state microwave devices, electronic warfare devices, millimeter wave devices, and passive devices. The review will include details of classified defense programs throughout.

In accordance with Section 10(d) of Pub. L. No. 92–463, as amended, (5 U.S.C. App. 11§ 10(d) (1988)), it has been determined that this Advisory Group meeting concerns matters listed in 5 U.S.C. 552b(c)(1) (1988), and that accordingly, this meeting will be closed to the public.

Dated: October 27, 1995.

L.M. Bynum,

Alternate OSD Federal Register Liasion Officer, Department of Defense.

[FR Doc. 95–27108 Filed 10–31–95; 8:45 am]

BILLING CODE 5000–04–M

Meeting of the DOD Advisory Group on Electron Devices

AGENCY: Department of Defense, Advisory Group on Electron Devices.

ACTION: Notice.

SUMMARY: Working Group C (Electro-Optics) of the DoD Advisory Group on Electron Devices (AGED) announces a closed session meeting.

DATES: The meeting will be held at 0900, Wednesday and Thursday, 29–30 November 1995.

ADDRESSES: The meeting will be held at Phillips Laboratory, 3550 Aberdeen Ave., S.E., Kirtland, AFB, NM 87117.

FOR FURTHER INFORMATION CONTACT: Elise Rabin, AGED Secretariat, 1745 Jefferson Davis Highway, Crystal Square Four, Suite 500, Arlington, Virginia 22202.

SUPPLEMENTARY INFORMATION: The mission of the Advisory Group is to provide advice to the Under Secretary of Defense for Acquisition and Technology, to the Director of Defense Research and Engineering (DDR&E), and through the DDR&E to the Director, Advanced Research Projects Agency and the Military Departments in planning and managing an effective and economical research and development program in the area of electron devices.

The Working Group C meeting will be limited to review of research and development programs which the Military Departments propose to initiate with industry, universities or in their laboratories. This opto-electronic device area includes such programs as imaging device, infrared detectors and lasers. The review will include details of classified defense programs throughout.

In accordance with Section 10(d) of Pub. L. No. 92–463, as amended, (5 U.S.C. App. II § 10(d) (1988)),it has been determined that this Advisory Group meeting concerns matters listed in 5 U.S.C. § 552b(c)(1) (1988), and that accordingly, this meeting will be closed to the public.

Dated: October 27, 1995.

L.M. Bynum,

Alternate OSD Federal Register Liaison Officer, Department of Defense.

[FR Doc. 95–27110 Filed 10–31–95; 8:45 am]

BILLING CODE 5000–04–M

Defense Science Board Task Force on Strategic Mobility

ACTION: Notice of Advisory Committee Meetings.

SUMMARY: The Defense Science Board Task Force on Strategic Mobility will meet in closed session on November 13–14, 1995 at the Institute for Defense Analyses, Alexandria, Virginia.

The mission of the Defense Science Board is to advise the Secretary of Defense through the Under Secretary of Defense for Acquisition and Technology on scientific and technical matters as they affect the perceived needs of the Department of Defense. At this meeting the Task Force will engage in a broad review of strategic mobility under a range of scenarios. The review should include the joint and service processes for planning, executing, protecting, and sustaining force deployments. It should also include the resources and activities that provide command and control communications and information systems in support of strategic mobility.

In accordance with Section 10(d) of the Federal Advisory Committee Act, P.L. No. 92–463, as amended (5 U.S.C. App. II, (1988)), it has been determined that this DSB Task Force meeting, concerns matters listed in 5 U.S.C. § 552b(c)(1) (1988), and that accordingly this meeting will be closed to the public.

Dated: October 27, 1995.

L.M. Bynum,

Alternate OSD Federal Register Liaison Officer, Department of Defense.

[FR Doc. 95–27112 Filed 10–31–95; 8:45 am]

BILLING CODE 5000–04–M

Department of Defense Wage Committee; Notice of Closed Meetings

Pursuant to the provisions of section 10 of Public Law 92–463, the Federal Advisory Committee Act, notice is hereby given that closed meetings of the Department of Defense Wage Committee will be held on November 7, 1995; November 14, 1995; November 21, 1995; and November 28, 1995, at 10:00 a.m. in Room A105, The Nash Building, 1400 Key Boulevard, Rosslyn, Virginia.

Under the provisions of section 10(d) of Public Law 92–463, the Department of Defense has determined that the meetings meet the criteria to close meetings to the public because the matters to be considered are related to internal rules and practices of the Department of Defense and the detailed wage data considered were obtained from officials of private establishments with a guarantee that the data will be held in confidence.

However, members of the public who may wish to do so are invited to submit material in writing to the chairman concerning matters believed to be deserving of the Committee's attention.

Additional information concerning the meetings may be obtained by writing to the Chairman, Department of Defense Wage Committee, 4000 Defense Pentagon, Washington, DC 20301–4000.

Dated: October 27, 1995.

L.M. Bynum,

Alternate OSD Federal Register Liaison Officer, Department of Defense.

[FR Doc. 95–27111 Filed 10–31–95; 8:45 am]

BILLING CODE 5000–04–M

Privacy Act of 1974; Notice to Amend Records Systems Notices

AGENCY: Department of Defense.

ACTION: Notice to amend records systems notices.

SUMMARY: The Office of the Secretary of Defense is amending two systems of records notices in its inventory of Privacy Act systems of records notices subject to the Privacy Act of 1974 (5 U.S.C. 552a), as amended.

DATES: These actions will be effective December 1, 1995, unless comments are received that would result in a contrary determination.

ADDRESSES: Send comments to the OSD Privacy Act Officer, Washington Headquarters Services, Correspondence and Directives Division, Records Management Division, 1155 Defense Pentagon, Room 5C315, Washington, DC 20301–1155.

FOR FURTHER INFORMATION CONTACT: Mr. Dan Cragg at (703) 695–0970.

SUPPLEMENTARY INFORMATION: The Office of the Secretary of Defense systems of records notices subject to the Privacy Act of 1974 (5 U.S.C. 552a), as amended, have been published in the Federal Register and are available from the address above.

The proposed amendments are not within the purview of subsection (r) of the Privacy Act (5 U.S.C. 552a), as amended, which would require the submission of a new or altered system report. The specific changes to the record system being amended are set forth below followed by the notice, as amended, published in its entirety.

Dated: October 26, 1995.

Patricia L. Toppings,
Alternate OSD Federal Register Liaison Officer, Department of Defense.

DGC 04

SYSTEM NAME:

Personnel Security Clearance Adjudication Files *(March 24, 1995, (60 FR 15539).*

CHANGES:

* * * * *

CATEGORIES OF INDIVIDUALS COVERED BY THE SYSTEM:

After 'employees' insert ', military personnel,'.

* * * * *

RETENTION AND DISPOSAL:

Insert 'Case files for military and DoD civilian personnel security clearance cases will be returned to the appropriate DoD Component after DOHA completes its processing of those cases.' after the first sentence.

* * * * *

DGC 04

SYSTEM NAME:

Personnel Security Clearance Adjudication Files.

SYSTEM LOCATION:

Defense Office of Hearings and Appeals, Defense Legal Services Agency, Department of Defense, 4015 Wilson Boulevard, Suite 300, Arlington, VA 22203–1995;

Defense Office of Hearings and Appeals, Defense Legal Services Agency, 6946 Van Nuys Boulevard, Suite 124, Van Nuys, CA 91405–3935; and

Defense Office of Hearings and Appeals, Defense Legal Services Agency, 3990 East Broad Street, Building 306, Columbus, OH 43216–5007.

Decentralized inactive segments are held at the Washington National Records Center, and at the U.S. Army Investigative Records Depository, Fort Meade, MD 20755. Automated Joint Adjudicative Clearance System records are maintained on a system V5–02, Defense Central Index of Investigations, at Defense Investigative Service, Personnel Investigations Center, Baltimore, MD, with access by computer terminals at Defense Office of Hearings and Appeals (DOHA) locations.

CATEGORIES OF INDIVIDUALS COVERED BY THE SYSTEM:

Current and former Federal Government, contractor, state and local government employees, military personnel, and other persons whose security clearance or trustworthiness cases are referred to the Defense Office of Hearings and Appeals.

CATEGORIES OF RECORDS IN THE SYSTEM:

System includes automated case status records for current cases and inactive cases, an alphabetical card index file for records of cases prior to 1984 used for recording actions taken and for identification and location of case files within the system, and individual case files.

Case files include requests for investigation, clearance, and adjudication; general correspondence relating to cases; personnel security questionnaires; investigative reports prepared by various investigative agencies, which may include information obtained from interviews, court documents, law enforcement records, business records, and other sources; medical and psychiatric records and evaluations; adjudicator's case summaries; Defense Industrial Security Clearance Office (DISCO) referral recommendations; correspondence between or concerning applicants for clearance and DOHA elements, DISCO, medical facilities, DoD Psychiatric Consultants, investigative agencies, Military Departments, other DoD Components and Federal agencies, Personnel Security Specialists, Department Counsel, Administrative Judges, Appeal Board, and elements of the Office of the Secretary of Defense and Defense Investigative Service; written interrogatories and Statements of Reasons (SIR) to applicants, with replies, pleadings or correspondence filed and served on all parties, recommendations, summaries, and records of adjudicative actions; transcripts of hearings; exhibits admitted into evidence; decisions of Administrative Judges and Appeal Boards; and such other matter as may be included in the record.

AUTHORITY FOR MAINTENANCE OF THE SYSTEM:

10 U.S.C. 140; 31 U.S.C. 1535; Executive Orders 10865, as amended, 10450, as amended, 12829, 9397, and 12698.

PURPOSE(S):

These records are collected and maintained to determine whether the granting or retention of a security clearance to or affirmative trustworthiness decision for an individual is clearly consistent with the national interest; to record adjudicative actions and determinations; to record processing steps taken and processing time; to prepare statistical listings and summaries; to document due process actions taken; to assist authorized DoD Consulting Psychiatrists to compile evaluations and reports; to respond to inquiries from within the executive and legislative branches when the inquiry is made at the request of the individual or for official purposes; to monitor and control adjudicative actions and processes.

Automated case status system and card files are used to record statistics, provide location and status and internal identification of cases, to prepare listings and statistical reports and summaries, and to monitor work flow and actions.

ROUTINE USES OF RECORDS MAINTAINED IN THE SYSTEM, INCLUDING CATEGORIES OF USERS AND THE PURPOSES OF SUCH USES:

In addition to those disclosures generally permitted under 5 U.S.C. 552a(b) of the Privacy Act, these records or information contained therein may specifically be disclosed outside the DoD as a routine use pursuant to 5 U.S.C. 552a(b)(3) as follows:

Case files referred by Federal Emergency Management Agency (FEMA) for adjudication by DOHA are provided to FEMA when action is completed, along with recommended clearance decisions.

The 'Blanket Routine Uses' set forth at the beginning of OSD's compilation of systems of records notices apply to this system.

POLICIES AND PRACTICES FOR STORING, RETRIEVING, ACCESSING, RETAINING, AND DISPOSING OF RECORDS IN THE SYSTEM:

STORAGE:

Paper records are maintained in file folders, and on file cards; electronic records are stored on magnetic or optical media; certain automated records are maintained on magnetic tapes and disks at Defense Investigative Service, Personnel Investigations Center, Baltimore, MD.

RETRIEVABILITY:

Filed alphabetically by name, or by case number. Access to computer data may be made by name and Social Security Number and a combination of name and other personal identifying data.

SAFEGUARDS:

Records are stored in a secure area accessible only to DOHA authorized

personnel. Except for a small number of records that are classified and need to be safeguarded as classified materials, all other records are stored, processed, transmitted and protected as the equivalent of For Official Use Only information. Records are accessed by the custodian of the record system and by persons responsible for servicing the system, who are properly screened and have a need-to-know. Computer hardware is located in controlled areas with access limited to authorized personnel. Computer access is via dedicated data circuits with password control. Individual passwords are changed periodically and upon departure of personnel. The dedicated data feature prevents access from standard dial-up telephones. Automated systems are operated by DOHA and by the Defense Investigative Service, Personnel Investigations Center, Information Systems Division. Only DOHA personnel are given the security level on the computer system needed to amend, add, alter, change or delete DOHA records. Other authorized contributors and users of the Defense Central Index of Investigations have read-only access to DOHA case status records in the system.

RETENTION AND DISPOSAL:

Completed case files are returned to non-DoD agencies and are subject to records retention schedules of the owning agency after completion of DOHA action. Case files for military and DoD civilian personnel security clearance cases will be returned to the appropriate DoD Component after DOHA completes its processing of those cases. Copies of case summaries and recommended adjudication decisions and ancillary documents for all cases are retained for internal reference purposes by DOHA personnel. Industrial security and trustworthiness cases are retained at DOHA for two years after annual cut-offs, then are retired for twenty years at the Washington National Records Center and then destroyed.

Inactive Department of Defense case files prior to 1982 are maintained at the U.S. Army Investigative Records Repository, Ft. Meade, MD 20755. Automated case tracking records and alphabetical card index files are retained as locator for active and inactive cases and for statistical purposes.

SYSTEM MANAGER(S) AND ADDRESS:

Director, Defense Office of Hearings and Appeals, PO Box 3656, Arlington, VA 22203–1995.

NOTIFICATION PROCEDURE:

Individuals seeking to determine whether information about themselves is contained in this system should address written inquiries to the Director, Defense Office of Hearings and Appeals, PO Box 3656, Arlington, VA 22203–1995.

Individual should provide their full name and Social Security Number.

RECORD ACCESS PROCEDURES:

Individuals seeking access to information about themselves contained in this system of records should address written requests to the Director, Defense Office of Hearings and Appeals, PO Box 3656, Arlington, VA 22203–1995.

Individuals should provide their full name, and any former names used, date and place of birth, Social Security Number.

Requests must be signed and notarized or, if the individual does not have access to notary services, preceded by a signed and dated declaration verifying the identity of the requester, in substantially the following form: '*I certify that the information provided by me is true, complete, and accurate to the best of my knowledge and belief and this request is made in good faith. I understand that a knowing and willful false, fictitious or fraudulent statement or representation can be punished by fine or imprisonment or both.' (Signature).*

Some records may be made available for review at DOHA Headquarters, upon appointment made with Director. Individual must present picture identification, such as a valid driver's license.

CONTESTING RECORD PROCEDURES:

The OSD's rules for accessing records, for contesting contents and appealing initial agency determinations are published in OSD Administrative Instruction No. 81; 32 CFR part 311; or may be obtained from the system manager.

RECORD SOURCE CATEGORIES:

Information is received from investigative reports from Federal investigative agencies; personnel security records and correspondence; medical and personnel records, reports and evaluations; correspondence from contractors, employers, organizations of assignment and Federal agencies, DoD organizations, agencies and offices; from individuals, their attorneys or authorized representatives; from witnesses at hearings or documentary evidence made part of the hearing record.

EXEMPTIONS CLAIMED FOR THE SYSTEM:

Parts of this record system may be exempt under 5 U.S.C. 552a(k)(5), as applicable.

An exemption rule for this record system has been promulgated according to the requirements of 5 U.S.C. 553(b)(1), (2), and (3), (c) and (e) and published in 32 CFR part 311. For additional information contact the system manager.

DGC 17

SYSTEM NAME:

Hearings and Appeals Case Files *(March 24, 1995, 60 FR 15540).*

CHANGES:

* * * * *

SYSTEM LOCATION:

Delete entry and replace with 'Defense Office of Hearings and Appeals, Defense Legal Services Agency, Department of Defense, 4015 Wilson Boulevard, Suite 300, Arlington, VA 22203–1995;

Defense Office of Hearings and Appeals, Western Hearing Office, Second Floor, Building A, 2180 Burbank Boulevard, Suite 250, Woodland Hills, CA 91367–6484;

Defense Office of Hearings and Appeals, Western DepartmentCounsel, Second Floor, Building A, 2180 Burbank Boulevard, Suite235, Woodland Hills, CA 91367–6484;

Defense Office of Hearings and Appeals, Defense Legal Services Agency, 3990 East Broad Street, Building 306, Columbus, OH 43216–5007; and

Defense Office of Hearings and Appeals, Boston Hearing Office, Room D-111B, Kansas Street, Natick, MA 01760–5055.'

* * * * *

DGC 17

SYSTEM NAME:

Hearings and Appeals Case Files.

SYSTEM LOCATION:

Defense Office of Hearings and Appeals, Defense Legal Services Agency, Department of Defense, 4015 Wilson Boulevard, Suite 300, Arlington, VA 22203–1995;

Defense Office of Hearings and Appeals, Western Hearing Office, Second Floor, Building A, 2180 Burbank Boulevard, Suite 250, Woodland Hills, CA 91367–6484;

Defense Office of Hearings and Appeals, Western DepartmentCounsel, Second Floor, Building A, 2180 Burbank Boulevard, Suite235, Woodland Hills, CA 91367–6484;

Defense Office of Hearings and Appeals, Defense Legal Services Agency, 3990 East Broad Street, Building 306, Columbus, OH 43216–5007; and

Defense Office of Hearings and Appeals, Boston Hearing Office, Room D-111B, Kansas Street, Natick, MA 01760–5055.

CATEGORIES OF INDIVIDUALS COVERED BY THE SYSTEM:

(1) Beneficiaries and providers under the Civilian Health and Medical Program of the Uniformed Services (CHAMPUS) that have unresolved disputes with the Office of CHAMPUS (OCHAMPUS);

(2) Students in the Department of Defense Dependent Schools (DoDDS) overseas and Section 6 schools and their sponsors.

CATEGORIES OF RECORDS IN THE SYSTEM:

CHAMPUS-related categories include: Appointment memoranda and transmittal correspondence; case files; petitions and answers to petitions; exhibits admitted into evidence; written transcripts or electronic records of hearings; pleadings or correspondence properly filed and served on all parties; claims and all other pertinent materials relating to a claim; billings, applications or approval forms; medical records, family history files; such other matter as the hearing officer may include in the record, rulings or orders issued by the hearing office, and the hearing officer's written decision.

Education-related categories include: Records pertaining to students attending DoD-operated dependent schools in case files pertaining to hearings and appeals conducted pursuant to Appendix C to 32 CFR part 80, Special Education Children with Disabilities Within the Section 6 School Arrangements; 32 CFR part 57, Education of Handicapped Children in DoD Dependent Schools; or 32 CFR part 56, Nondiscrimination on the basis of Handicap in Programs and Activities Assisted or conducted by the Department of Defense, to afford impartial due process hearings and administrative appeals on the early intervention services or identification, evaluation, and educational placement of, and free appropriate public education provided to a disabled child; documents associated with such hearing, including: Appointment memoranda and transmittal correspondence; petitions and answers to petitions, the written transcript or the electronic record of the hearing, exhibits admitted into evidence; pleadings, written submissions or correspondence properly filed and served on all parties, such other matter as the hearing officer may include in the record, rulings or orders issued by the hearing office, the hearing officer's written decision; documents associated with administrative appeals from the hearing officer's written decision; including the administrative record on appeal, pleadings, written submissions or correspondence properly filed and served on all parties, rulings or orders issued by the appeal board, and the appeal board's written decision.

Common to both categories, automated case status records for current cases and inactive cases are used to provide location and status and internal identification of cases, to prepare listings and internal statistical reports, and to monitor workflow and case handling actions.

AUTHORITY FOR MAINTENANCE OF THE SYSTEM:

10 U.S.C. 140 and E.O. 9397.

PURPOSE(S):

Records are collected and maintained to support claims resolution and impartial due process hearings/and or ancillary proceedings to parties requesting them and to provide decisions to those parties involved in the hearings; to record processing steps taken and processing time; to prepare statistical listings and summaries; to document due process actions taken; to respond to inquiries from offices within the executive and legislative branches when the inquiry is made at the request of the individual, or for official purposes; to monitor and control adjudicative actions and processes.

The automated case tracking system is used to record statistics, provide location and status and internal identification of cases, to prepare listings and internal statistical reports, and to monitor work flow and case handling actions.

ROUTINE USES OF RECORDS MAINTAINED IN THE SYSTEM, INCLUDING CATEGORIES OF USERS AND THE PURPOSES OF SUCH USES:

In addition to those disclosures generally permitted under 5 U.S.C. 552a(b) of the Privacy Act, these records or information contained therein may specifically be disclosed outside the DoD as a routine use pursuant to 5 U.S.C. 552a(b)(3) as follows:

The 'Blanket Routine Uses' set forth at the beginning of OSD's compilation of systems of records notices apply to this system.

POLICIES AND PRACTICES FOR STORING, RETRIEVING, ACCESSING, RETAINING, AND DISPOSING OF RECORDS IN THE SYSTEM:

STORAGE:

Paper records are maintained in file folders, and on file cards; electronic records are stored on magnetic or optical media.

RETRIEVABILITY:

Filed alphabetically by beneficiary, provider, child's or sponsor's name, Social Security Number, or by case number. Access to computer data may be made by name, Social Security Number, or a combination of other personal identifying data.

SAFEGUARDS:

Records are stored in a secure area accessible only to DOHA authorized personnel. All records are stored, processed, transmitted and protected as the equivalent of For Official Use Only information. Records are accessed by the custodian of the record system and by persons responsible for using or servicing the system, who are properly screened and have a need-to-know. Computer hardware is located in controlled areas with access limited to authorized personnel. Computer access is via dedicated data circuits with password control. Individual passwords are changed periodically and upon departure of personnel. The dedicated data feature prevents access from standard dial-up telephones.

RETENTION AND DISPOSAL:

Along with decisions and other materials developed during DOHA processing of cases, the original case files, tapes, exhibit files, and associated documentation are returned to OCHAMPUS and the DoD Education Activity and are subject to records retention schedules of the owning agency after completion of DOHA action. Copies of decisions and audio tapes are destroyed when no longer needed for reference purposes but not later than 6 years after rendering a decision.

SYSTEM MANAGER(S) AND ADDRESS:

Director, Defense Office of Hearings and Appeals, PO Box 3656, Arlington, VA 22203–1995.

NOTIFICATION PROCEDURE:

Individuals seeking to determine whether information about themselves is contained in this system should address written inquiries to the Director, Defense Office of Hearings and Appeals, PO Box 3656, Arlington, VA 22203–1995.

RECORD ACCESS PROCEDURES:

Individuals seeking access to information about themselves contained in this system of records should address written inquiries to the Director, Defense Office of Hearings and Appeals, PO Box 3656, Arlington, VA 22203–1995.

Individual should provide full name and any former names used, date and place of birth, and Social Security Number.

Some records may be made available for review at DOHA Headquarters upon appointment made with the Director. Individual must be able to provide picture identification or a valid driver's license.

Requests must be signed and notarized or, if the individual does not have access to notary services, preceded by a signed and dated declaration verifying the identity of the requester, in substantially the following form: *'I certify that the information provided by me is true, complete, and accurate to the best of my knowledge and belief and this request is made in good faith. I understand that a knowing and willful false, fictitious or fraudulent statement or representation can be punished by fine or imprisonment or both. (Signature).'*

CONTESTING RECORD PROCEDURES:

The OSD's rules for accessing records, for contesting contents and appealing initial agency determinations are published in OSD Administrative Instruction No. 81; 32 CFR part 311; or may be obtained from the system manager.

RECORD SOURCE CATEGORIES:

For OCHAMPUS Cases: Case files referred by OCHAMPUS to DOHA Administrative Judges; correspondence and supplementary material from DOHA to the parties in connection with the handling of the case; correspondence, pleadings, written submissions and evidence associated with hearings from parties to such proceedings; DoD correspondence associated with receipt and transmittal of case files.

For DoD Education Activity Cases: Case files assigned to DOHA Administrative Judges for hearing and/or administrative appeals; correspondence and supplementary material from DOHA to the parties in connection with the handling of the case; correspondence, pleadings, written submissions and evidence associated with hearings or appeals from parties to such proceedings; rulings, orders, and written decisions from hearing officers or appeal board; correspondence from individuals, their attorneys, or authorized representatives; and DoD correspondence associated with receipt and transmittal of case files.

EXEMPTIONS CLAIMED FOR THE SYSTEM:

None.

[FR Doc. 95–27113 Filed 10–31–95; 8:45 am]

BILLING CODE 5000–04–F

Defense Logistics Agency

Privacy Act of 1974; Computer Matching Program Between the United States Department of Agriculture and the Defense Manpower Data Center of the Department of Defense

AGENCY: Defense Manpower Data Center, Defense Logistics Agency, Department of Defense.

ACTION: Notice of a computer matching program between the United States Department of Agriculture (USDA) and the Department of Defense (DoD) for public comment.

SUMMARY: Subsection (e)(12) of the Privacy Act of 1974, as amended, (5 U.S.C. 552a) requires agencies to publish advance notice of any proposed or revised computer matching program by the matching agency for public comment. The DoD, as the matching agency under the Privacy Act is hereby giving constructive notice in lieu of direct notice to the record subjects of a computer matching program between USDA and DoD that their records are being matched by computer. The record subjects are USDA delinquent debtors who may be current or former Federal employees receiving Federal salary or benefit payments and who are indebted and or delinquent in their repayment of debts owed to the United States Government under programs administered by USDA so as to permit USDA to pursue and collect the debt by voluntary repayment or by administrative or salary offset procedures under the provisions of the Debt Collection Act of 1982.

DATES: This proposed action will become effective December 1, 1995, and the computer matching will proceed accordingly without further notice, unless comments are received which would result in a contrary determination or if the Office of Management and Budget or Congress objects thereto. Any public comment must be received before the effective date.

ADDRESSES: Any interested party may submit written comments to the Director, Defense Privacy Office, Crystal Mall 4, Room 920, 1941 Jefferson Davis Highway, Arlington, VA 22202–4502.

FOR FURTHER INFORMATION CONTACT: Mr. Aurelio Nepa, Jr. at telephone (703) 607–2943.

SUPPLEMENTARY INFORMATION: Pursuant to subsection (o) of the Privacy Act of 1974, as amended, (5 U.S.C. 552a), the DMDC and USDA have concluded an agreement to conduct a computer matching program between the agencies. The purpose of the match is to exchange personal data between the agencies for debt collection. The match will yield the identity and location of the debtors within the Federal government so that USDA can pursue recoupment of the debt by voluntary payment or by administrative or salary offset procedures. Computer matching appeared to be the most efficient and effective manner to accomplish this task with the least amount of intrusion of personal privacy of the individuals concerned. It was therefore concluded and agreed upon that computer matching would be the best and least obtrusive manner and choice for accomplishing this requirement.

A copy of the computer matching agreement between USDA and DMDC is available upon request to the public. Requests should be submitted to the address caption above or to the Mr. Reynaldo Gonzalez, U.S. Department of Agriculture, Debt Collection Coordinator, 14th and Independence Avenue, SW, Room 3019, South Building, Washington, DC 20250. Telephone (202) 720–1168.

Set forth below is the notice of the establishment of a computer matching program required by paragraph 6.c. of the Office of Management and Budget Guidelines on computer matching published in the Federal Register at 54 FR 25818 on June 19, 1989.

The matching agreement, as required by 5 U.S.C. 552a(r) of the Privacy Act, and an advance copy of this notice was submitted on October 19, 1995, to the Committee on Government Reform and Oversight of the House of Representatives, the Committee on Governmental Affairs of the Senate, and the Administrator of the Office of Information and Regulatory Affairs, Office of Management and Budget pursuant to paragraph 4d of Appendix I to OMB Circular No. A–130, 'Federal Agency Responsibilities for Maintaining Records about Individuals,' dated July 15, 1994 (59 FR 37906, July 25, 1994). The matching program is subject to review by OMB and Congress and shall not become effective until that review period has elapsed.

Dated: October 26, 1995.

Patricia L. Toppings,

Alternate OSD Federal Register Liaison Officer, Department of Defense.

NOTICE OF A COMPUTER MATCHING PROGRAM BETWEEN THE UNITED STATES DEPARTMENT OF AGRICULTURE AND THE DEPARTMENT OF DEFENSE FOR DEBT COLLECTION

A. *Participating Agencies:* Participants in this computer matching program are the United States Department of Agriculture (USDA) and the Defense Manpower Data Center (DMDC) of the Department of Defense (DoD). The USDA is the source agency, i.e., the activity disclosing the records for the purpose of the match. The DMDC is the specific recipient activity or matching agency, i.e., the agency that actually performs the computer matching.

B. *Purpose of the match:* Upon the execution of this agreement, the USDA will provide and disclose debtor records to DMDC to identify and locate any matched Federal personnel, employed or retired, who owe delinquent debts to the Federal Government under certain programs administered by the USDA. The USDA will use this information to initiate independent collection of those debts under the provisions of the Debt Collection Act of 1982 when voluntary payment is not forthcoming. These collection efforts will include requests by the USDA of the employing agency to apply administrative and/or salary offset procedures until such time as the obligation is paid in full.

C. *Authority for conducting the match:* Debt Collection Act of 1982 (Pub. L. 97-365), 31 U.S.C. Chapter 37, Subchapter I (General) and Subchapter II (Claims of the United States Government), 31U.S.C. section 3711 Collection and Compromise, 31 U.S.C. section 3716 Administrative Offset, 5 U.S.C. section 5514 Installment Deduction for Indebtedness (Salary Offset); 10 U.S.C. section 136, Assistant Secretaries of Defense, Appointment Powers and Duties; section 206 of Executive Order 11222; 4 CFR chapter II, Federal Claims Collection Standards (General Accounting Office - Department of Justice); 5 CFR 550.1101 - 550.1108 Collection by Offset from Indebted Government Employees (OPM); and 7 CFR part 3, Debt Management (USDA).

D. *Records to be matched:* The systems of records maintained by the respective agencies under the Privacy Act of 1974, as amended, 5 U.S.C. 552a, from which records will be disclosed for the purpose of this computer match are as follows:

Record system identified as Applicant/Borrower or Grantee File (USDA/FmHA-1), routine use number 2, last published in the Federal Register at 53 FR 5205 on February 22, 1988.

Record system identified as Accounts Receivable (USDA/FCIC-1), routine use number 9, last published in the Federal Register at 53 FR 4047 on February 11, 1988.

Record system identified as Claims Data Base (Automated) (USDA/ASCS-28), routine use number 8, last published in the Federal Register at 53 FR 2517 on January 28, 1988.

Record system identified as Administrative Billings and Collections (USDA/OFM-3), routine use number 6, last published in the Federal Register at 54 FR 25883 on June 20, 1989.

DMDC will use personal data from the record systems identified as S322.11 DMDC, entitled 'Federal Creditor Agency Debt Collection Data Base,' last published in the Federal Register on February 22, 1993, at 58 FR 10875.

Sections 5 and 10 of the Debt Collection Act (Pub.L. 97-365) authorize agencies to disclose information about debtors in order to effect salary or administrative offsets. Agencies must publish routine uses pursuant to subsection (b)(3) of the Privacy Act for those systems of records from which they intend to disclose this information. Sections 5 and 10 of the Debt Collection Act will comprise the necessary authority to meet the Privacy Act's 'compatibility' condition. The systems of records described above contain an appropriate routine use disclosure between the agencies of the information proposed in the match. The routine use provisions are compatible with the purpose for which the information was collected.

E. *Description of computer matching program:* USDA, as the source agency, will provide DMDC with a magnetic tape which contains the names of delinquent debtors in programs the USDA administers. Upon receipt of the computer tape file of debtor accounts, DMDC will perform a computer match using all nine digits of the SSN of the USDA file against a DMDC computer database. The DMDC database, established under an interagency agreement between DOD, OPM, OMB, and the Department of the Treasury, consists of employment records of Federal employees and military members, active, and retired. Matching records ('hits'), based on the SSN, will produce the member's name, service or agency, category of employee, and current work or home address. The hits or matches will be furnished to the USDA. The USDA is responsible for verifying and determining that the data on the DMDC reply tape file are consistent with the USDA's source file and for resolving any discrepancies or inconsistencies on an individual basis. The USDA will also be responsible for making final determinations as to positive identification, amount of indebtedness and recovery efforts as a result of the match.

The magnetic computer tape provided by USDA will contain data elements of the debtor's name, Social Security Number, internal account numbers and the total amount owed on approximately 121,000 delinquent debtors.

The DMDC computer database file contains approximately 10 million records of active duty and retired military members, including the Reserve and Guard, and the OPM government wide non-postal Federal civilian records of current and retired Federal employees.

F. *Inclusive dates of the matching program:* This computer matching program is subject to review by the Office of Management and Budget and Congress. If no objections are raised by either, and the mandatory 30 day public notice period for comment has expired for this Federal Register notice with no significant adverse public comments in receipt resulting in a contrary determination, then this computer matching program becomes effective and the respective agencies may begin the exchange of data 30 days after the date of this published notice at a mutually agreeable time and will be repeated annually. Under no circumstances shall the matching program be implemented before the 30 day public notice period for comment has elapsed as this time period cannot be waived. By agreement between USDA and DMDC, the matching program will be in effect and continue for 18 months with an option to renew for 12 additional months unless one of the parties to the agreement advises the other by written request to terminate or modify the agreement.

G. *Address for receipt of public comments or inquiries:* Director, Defense Privacy Office, Crystal Mall 4, Room 920, 1941 Jefferson Davis Highway, Arlington, VA 22202–4502. Telephone (703) 607–2943.

[FR Doc. 95–27114 Filed 10–31–95; 8:45 am]

BILLING CODE 5000–04–F

Department of the Army

Army Science Board; Notice of Closed Meeting

In accordance with Section 10(a)(2) of the Federal Advisory Committee Act (P.L. 92–463), announcement is made of the following Committee Meeting:

Name of Committee: Army Science Board (ASB).

Date of Meeting: 7 & 8 November 1995.

Time of Meeting: 0900–1700, 7 November 1995, 0800–1700, 8 November 1995.

Place: Lockheed-Martin Malta Test Facility—Malta, NY.

Agenda: The Army Science Board's (ASB) Independent Assessment Study Panel on ''Crusader Liquid Propellant Technology'' will meet for briefings and discussions relative to the subject under study. These meetings will be closed to the public in accordance with Section 552b(c) of Title 5, U.S.C., specifically paragraphs (1) and (4) thereof, and Title 5, U.S.C., Appendix 2, subsection 10(d). The classified, unclassified and proprietary matters to be discussed are so inextricably intertwined so as to preclude opening any portion of these meetings. For further information, please contact Michelle Diaz at (703) 695–0781.

Michelle P. Diaz,

Acting Administrative Officer, Army Science Board.

[FR Doc. 95–26983 Filed 10–31–95; 8:45 am]

BILLING CODE 3710–08–M

Army Science Board; Notice of Open Meeting

In accordance with Section 10(a)(2) of the Federal Advisory Committee Act (P.L. 92–463), announcement is made of the following Committee Meeting:

Name of Committee: Army Science Board (ASB).

Date of Meeting: 21 November 1995.

Time of Meeting: 0900–1300.

Place: Alexandria, VA.

Agenda: The Army Science Board (ASB) Independent Assessment Panel on ''Army Family Housing'' will meet to review current Army Housing policies, issues and initiatives. This meeting will be open to the public. Any interested person may attend, appear before, or file statements with the committee at the time and in the manner permitted by the committee. For further information, please contact Michelle Diaz at (703) 695–0781.

Michelle P. Diaz,

Acting Administrative Officer, Army Science Board.

[FR Doc. 95–26984 Filed 10–31–95; 8:45 am]

BILLING CODE 3710–08–M

Privacy Act of 1974; Notice to Amend Record Systems

AGENCY: Department of the Army, DOD.

ACTION: Notice to amend record systems.

SUMMARY: The Department of the Army proposes to amend twelve systems of records in its inventory of record systems notices subject to the Privacy Act of 1974 (5 U.S.C. 552a), as amended.

DATES: This action will be effective without further notice on December 1, 1995, unless comments are received that would result in a contrary determination.

ADDRESSES: Send comments to the Privacy Act Officer, Information Requirements Division, ASOP-MP, Department of the Army, Fort Huachuca, AZ 85613–5000.

FOR FURTHER INFORMATION CONTACT: Ms. Pat Turner at (602) 538–6856 or DSN 879-6856.

SUPPLEMENTARY INFORMATION: The Department of the Army record system notices for records systems subject to the Privacy Act of 1974 (5 U.S.C. 552a), as amended, have been published in the Federal Register and are available from the address above.

The specific changes to the record system being amended are set forth below, followed by the notice as amended. The proposed amendments are not within the purview of subsection (r) of the Privacy Act of 1974, (5 U.S.C. 552a), as amended, which requires the submission of a new or altered system report.

Dated: October 20, 1995.

Patricia L. Toppings,

Alternate OSD Federal Register Liaison Officer, Department of Defense.

AMENDMENTS
AAFES 0207.02

SYSTEM NAME:

Customer Comments, Inquiries, and Direct Line Files *(July 13, 1995, 60 FR 36111).*

* * * * *

CHANGES:

SYSTEM LOCATION:

Delete 'HQ Army and Air Force Exchange Service-Europe, Pinder Barracks, Schwabacherster 20 8502 Zirndorf' and replace with 'Army and Air Force Exchange Service-Europe Region, Building 4001, In der Witz 14–18, 55252 Mainz-Kastel, Germany'.

* * * * *

AAFES 0207.02

SYSTEM NAME:

Customer Comments, Inquiries, and Direct Line Files.

SYSTEM LOCATION:

Headquarters, Army and Air Force Exchange Service, PO Box 660202, Dallas, TX 75266–0202;

Army and Air Force Exchange Service-Europe Region, Building 4001, In der Witz 14–18, 55252 Mainz-Kastel, Germany; and

Exchange Regions and Area Exchanges at posts, bases, and satellites world-wide. Official mailing addresses are published as an appendix to the Army's compilation of systems of records notices.

CATEGORIES OF INDIVIDUALS COVERED BY THE SYSTEM:

Users of the Army and Air Force Exchange Service who make inquiries, complaints, or comments on its operations.

CATEGORIES OF RECORDS IN THE SYSTEM:

Customer's name, address and telephone number, information pertaining to the subject of inquiry, complaint, or comment and response thereto; customer opinion survey data.

AUTHORITY FOR MAINTENANCE OF THE SYSTEM:

10 U.S.C. 3012, 3013, and 8012.

PURPOSE(S):

To aid the Exchange management in determining needs of customers and action required to settle customer complaints.

ROUTINE USES OF RECORDS MAINTAINED IN THE SYSTEM, INCLUDING CATEGORIES OF USERS AND THE PURPOSES OF SUCH USES:

In addition to those disclosures generally permitted under 5 U.S.C. 552a(b) of the Privacy Act, these records or information contained therein may specifically be disclosed outside the DoD as a routine use pursuant to 5 U.S.C. 552a(b)(3) as follows:

The 'Blanket Routine Uses' set forth at the beginning of the Army's compilation of systems of records notices apply to this system.

POLICIES AND PRACTICES FOR STORING, RETRIEVING, ACCESSING, RETAINING, AND DISPOSING OF RECORDS IN THE SYSTEM:

STORAGE:

Paper records in file folders, stored in metal cabinets.

RETRIEVABILITY:

By customer's name.

SAFEGUARDS:

Records are accessible only by designated employees having official need therefor. Buildings housing records are protected by security guards.

RETENTION AND DISPOSAL:

Records are destroyed by shredding after 3 years.

SYSTEM MANAGER(S) AND ADDRESS:

Commander, Army and Air Force Exchange Service, PO Box 660202, Dallas, TX 75266–0202.

NOTIFICATION PROCEDURE:

Individuals seeking to determine whether information about themselves is contained in this system should address written inquiries to the Commander, Army and Air Force Exchange Service, ATTN: Director, Public Affairs Division, PO Box 660202, Dallas, TX 75266–0202.

Individual should provide their full name, current address and telephone number, case number that appeared on correspondence received from AAFES, and signature.

RECORD ACCESS PROCEDURES:

Individuals seeking access to information about themselves contained in this system should address written inquiries to the Commander, Army and Air Force Exchange Service, ATTN: Director, Public Affairs Division, PO Box 660202, Dallas, TX 75266–0202.

Individual should provide their full name, current address and telephone number, case number that appeared on correspondence received from AAFES, and signature.

CONTESTING RECORD PROCEDURES:

The Army's rules for accessing records and for contesting contents and appealing initial agency determinations are contained in Army Regulation 340–21; 32 CFR part 505; or may be obtained from the system manager.

RECORD SOURCE CATEGORIES:

From the individual.

EXEMPTIONS CLAIMED FOR THE SYSTEM:

None.

AAFES 0306.12

SYSTEM NAME:

Personnel Security Case Files *(February 22, 1993, 58 FR 10005).*

CHANGES:

SYSTEM IDENTIFIER

Delete entry and replace with 'AAFES 1703.03'.

SYSTEM NAME:

Delete entry and replace with 'Personnel Security Clearance Case Files'.

SYSTEM LOCATION:

Delete 'HQ Army and Air Force Exchange Service-Europe, Pinder Barracks, Schwabacherster 20 8502 Zirndorf' and replace with 'Army and Air Force Exchange Service-Europe Region, Building 4001, In der Witz 14–18, 55252 Mainz-Kastel, Germany'.

* * * * *

NOTIFICATION PROCEDURE:

Delete attention line and replace with 'ATTN: Director, Loss HQ Prevention Division'.

RECORD ACCESS PROCEDURE:

Delete attention line and replace with 'ATTN: Director, Loss Prevention Division'.

* * * * *

AAFES 1703.03

SYSTEM NAME:

Personnel Security Clearance Case Files.

SYSTEM LOCATION:

Headquarters, Army and Air Force Exchange Service, PO Box 660202, Dallas, TX 75266–0202;

Army and Air Force Exchange Service-Europe Region, Building 4001, In der Witz 14–18, 55252 Mainz-Kastel, Germany; and

Exchange Regions and Area Exchanges at posts, bases, and satellites world-wide. Official mailing addresses are published as an appendix to the Army's compilation of systems of records notices.

CATEGORIES OF INDIVIDUALS COVERED BY THE SYSTEM:

Persons affiliated with the Army and Air Force Exchange Service (AAFES) by assignment, employment, contractual relationship, or as the result of an interservice support agreement on whom a personnel security clearance determination has been completed, is in process, or may be pending.

CATEGORIES OF RECORDS IN THE SYSTEM:

File may contain pending and completed personnel security clearance actions on individuals by personal identifying data. It may also contain briefing/debriefing statements for special programs, sensitive positions, and other related information and documents required in connection with personnel security clearance determinations.

AUTHORITY FOR MAINTENANCE OF THE SYSTEM:

E.O. 11652.

PURPOSE(S):

To assist in the processing of personnel security clearance actions; to record security clearances issued or denied; and to verify eligibility for access to classified information or assignment to a sensitive position. Records may be used by AAFES commanders for adverse personnel actions such as removal from sensitive duties, removal from employment, denial to a restricted or sensitive area, and revocation of security clearance.

ROUTINE USES OF RECORDS MAINTAINED IN THE SYSTEM, INCLUDING CATEGORIES OF USERS AND THE PURPOSES OF SUCH USES:

In addition to those disclosures generally permitted under 5 U.S.C. 552a(b) of the Privacy Act, these records or information contained therein may specifically be disclosed outside the DoD as a routine use pursuant to 5 U.S.C. 552a(b)(3) as follows:

Information may be released to Federal agencies based on formal accreditation as specified in official directives; regulations; to Federal, State, local, and foreign law enforcement, intelligence, or security agencies in connection with a lawful investigation under their jurisdiction.

The 'Blanket Routine Uses' set forth at the beginning of the Army's compilation of systems of records notices apply to this system.

POLICIES AND PRACTICES FOR STORING, RETRIEVING, ACCESSING, RETAINING, AND DISPOSING OF RECORDS IN THE SYSTEM:

STORAGE:

Paper records in folders; cards; computer tapes, punched cards, or discs.

RETRIEVABILITY:

By individual's surname.

SAFEGUARDS:

Records are located in locked safes or cabinets; access is restricted to designated individuals having need therefor in the performance of official duties.

RETENTION AND DISPOSAL:

Records are permanent. They are retained in active file until the end of the fiscal year in which the individual is no longer employed or associated with the Army and Air Force Exchange Service; held 2 additional years in inactive status and retired to the National Personnel Records Center, 111 Winnebago Street, St. Louis, MO 63118–4199.

SYSTEM MANAGER(S) AND ADDRESS:

Commander, Army and Air Force Exchange Service, PO Box 660202, Dallas, TX 75266–0202.

NOTIFICATION PROCEDURE:

Individuals seeking to determine whether information about themselves is contained in this system should address written inquiries to the Commander, Army and Air Force

Exchange Service, ATTN: Director, Loss Prevention Division, PO Box 660202, Dallas, TX 75266–0202.

Individual should provide their full name, Social Security Number, present address and telephone number, and signature.

RECORD ACCESS PROCEDURES:

Individuals seeking access to information about themselves contained in this system should address written inquiries to the Commander, Army and Air Force Exchange Service, ATTN: Director, Loss Prevention Division, PO Box 660202, Dallas, TX 75266–0202.

Individual should provide their full name, Social Security Number, present address and telephone number, and signature.

CONTESTING RECORD PROCEDURES:

The Army's rules for accessing records and for contesting contents and appealing initial agency determinations are contained in Army Regulation 340–21; 32 CFR part 505; or may be obtained from the system manager.

RECORD SOURCE CATEGORIES:

From the individual; investigative results furnished by the Defense Investigative Service and other Federal, Department of Defense, State, local, and/or foreign law enforcement agencies.

EXEMPTIONS CLAIMED FOR THE SYSTEM:

None.

AAFES 0401.04

SYSTEM NAME:

Official Personnel Folders and General Personnel Files *(February 22, 1993, 58 FR 10006).*

CHANGES:

* * * * *

SYSTEM LOCATION:

Delete 'HQ Army and Air Force Exchange Service-Europe, Pinder Barracks, Schwabacherster 20 8502 Zirndorf' and replace with 'Army and Air Force Exchange Service-Europe Region, Building 4001, In der Witz 14–18, 55252 Mainz-Kastel, Germany'.

* * * * *

RETRIEVABILITY:

Delete entry and replace with 'By individual's surname and Social Security Number.'

* * * * *

NOTIFICATION PROCEDURE:

Delete attention line and replace with 'ATTN: Senior Vice President, People Resources Directorate'.

RECORD ACCESS PROCEDURES:

Delete attention line and replace with 'ATTN: Senior Vice President, People Resources Directorate'.

* * * * *

AAFES 0401.04

SYSTEM NAME:

Official Personnel Folders and General Personnel Files.

SYSTEM LOCATION:

The Official Personnel Folder is located in the Personnel Office at Headquarters, Army and Air Force Exchange Service, PO Box 660202, Dallas, TX 75266–0202;

Army and Air Force Exchange Service-Europe Region, Building 4001, In der Witz 14–18, 55252 Mainz-Kastel, Germany; and

Exchange Regions and Area Exchanges at posts, bases, and satellites world-wide. Official mailing addresses are published as an appendix to the Army's compilation of systems of records notices.

Included in this system are the Employee Service Record Card Files and those records duplicated for maintenance at a site closer to where the employee works (e.g., in an administrative office or supervisor's work folder).

CATEGORIES OF INDIVIDUALS COVERED BY THE SYSTEM:

Current and former employees of the Army and Air Force Exchange Service (AAFES).

CATEGORIES OF RECORDS IN THE SYSTEM:

Name, Social Security Number, date of birth, home residence, mailing address, telephone number; records reflecting work experience, educational level achieved; letters of commendation; training courses in which enrolled and certificates of completion; security clearance; personnel actions such as appointments, transfers, reassignments, separations, reprimands; salary and benefits documents to include allowances and insurance data; travel orders; and similar relevant information.

AUTHORITY FOR MAINTENANCE OF THE SYSTEM:

10 U.S.C. 3012, 3013, and 8012.

PURPOSE(S):

The Official Personnel Folder and other general personnel records are the official repository of the records, reports of personnel actions, and the documents and papers required in connection with these actions effected during an employee's service with the Army and Air Force Exchange Service.

Records provide the basic source of factual data about a person's employment with the agency and have various uses by AAFES personnel offices, including screening qualifications of employees, determining status, eligibility, and employee's rights and benefits, computing length of service, and other information needed to provide personnel services.

ROUTINE USES OF RECORDS MAINTAINED IN THE SYSTEM, INCLUDING CATEGORIES OF USERS AND THE PURPOSES OF SUCH USES:

In addition to those disclosures generally permitted under 5 U.S.C. 552a(b) of the Privacy Act, these records or information contained therein may specifically be disclosed outside the DoD as a routine use pursuant to 5 U.S.C. 552a(b)(3) as follows:

Information may be disclosed to the Department of Labor, Department of Veterans Affairs, Social Security Administration, Federal agencies that have special civilian employee retirement programs; or a national, state, county, municipal, or other publicly recognized charitable or income security administration agency (e.g., State unemployment compensation agencies), where necessary to adjudicate a claim under the retirement, insurance or health benefits programs or to an agency to conduct studies or audits of benefits being paid under such programs.

The 'Blanket Routine Uses' set forth at the beginning of the Army's compilation of systems of records notices apply to this system.

POLICIES AND PRACTICES FOR STORING, RETRIEVING, ACCESSING, RETAINING, AND DISPOSING OF RECORDS IN THE SYSTEM:

STORAGE:

Paper records in file folders; Kardex files; microfilm or microfiche, and in computer storage media.

RETRIEVABILITY:

By individual's surname and Social Security Number.

SAFEGUARDS:

Paper or microfiche/microfilmed records are located in locked metal cabinets or in secured rooms with access limited to those personnel whose official duties require access. Access to computerized records is limited, through use of access codes and entry logs, to those whose official duties require access.

RETENTION AND DISPOSAL:

The Official Personnel Folder is permanent. Upon employee's separation, it is transferred to the National Personnel Records Center (Civilian), 111 Winnebago Street, St. Louis, MO 63118–4199. Duplicate

records maintained in an administrative office or at supervisory levels are destroyed 90 days after employee's separation. Service Record Card Files are retained for 5 years following employee's separation and retired to a records holding area for 15 additional years before being destroyed, except that those of employees of discontinued AAFES installations are retired to the National Personnel Records Center (Civilian). Automated personnel records are retained indefinitely for managerial and statistical studies; after an employee's separation, records are not used in making decisions concerning the employee.

SYSTEM MANAGER(S) AND ADDRESS:

Commander, Army and Air Force Exchange Service, PO Box 660202, Dallas, TX 75266–0202.

NOTIFICATION PROCEDURE:

Individuals seeking to determine whether information about themselves is contained in this system should address written inquiries to the Commander, Army and Air Force Exchange Service, ATTN: Senior Vice President, People Resources Directorate, PO Box 660202, Dallas, TX 75266–0202.

Individuals must furnish their full name, Social Security Number, current address and telephone number; if terminated, also include date of birth, date of separation, and last employing location.

RECORD ACCESS PROCEDURES:

Individuals seeking access to information about themselves contained in this system should address written inquiries to the Commander, Army and Air Force Exchange Service, ATTN: Senior Vice President, People Resources Directorate, PO Box 660202, Dallas, TX 75266–0202.

Individuals must furnish their full name, Social Security Number, current address and telephone number; if terminated, also include date of birth, date of separation, and last employing location.

CONTESTING RECORD PROCEDURES:

The Army's rules for accessing records and for contesting contents and appealing initial agency determinations are contained in Army Regulation 340–21; 32 CFR part 505; or may be obtained from the system manager.

RECORD SOURCE CATEGORIES:

From the individual, educational institutions, officials and other individuals of the Army and Air Force Exchange Service, third parties responding to reference checks, previous employers, law enforcement agencies, physicians.

EXEMPTIONS CLAIMED FOR THE SYSTEM:

None.

AAFES 0403.01

SYSTEM NAME:

Application for Employment Files *(February 22, 1993, 58 FR 10007).*

CHANGES:

* * * * *

SYSTEM LOCATION:

Delete 'HQ Army and Air Force Exchange Service-Europe, Pinder Barracks, Schwabacherster 20 8502 Zirndorf' and replace with 'Army and Air Force Exchange Service-Europe Region, Building 4001, In der Witz 14–18, 55252 Mainz-Kastel, Germany'.

* * * * *

RETENTION AND DISPOSAL:

Delete entry and replace with 'Applicant records are retained for up to six months; records for applicants hired become part of the person's Official Personnel Folder.'

* * * * *

NOTIFICATION PROCEDURE:

Delete attention line and replace with 'ATTN: Senior Vice President, People Resources Directorate'.

RECORD ACCESS PROCEDURES:

Delete attention line and replace with 'ATTN: Senior Vice President, People Resources Directorate'.

* * * * *

AAFES 0403.01

SYSTEM NAME:

Application for Employment Files.

SYSTEM LOCATION:

Headquarters, Army and Air Force Exchange Service, PO Box 660202, Dallas, TX 75266–0202, for applicants of executive and managerial positions.

Records of applicants for all other Army and Air Force Exchange Service positions may be located also at Army and Air Force Exchange Service-Europe Region, Building 4001, In der Witz 14–18, 55252 Mainz-Kastel, Germany; and

Exchange Regions and Area Exchanges at posts, bases, and satellites world-wide. Official mailing addresses are published as an appendix to the Army's compilation of systems of records notices.

CATEGORIES OF INDIVIDUALS COVERED BY THE SYSTEM:

Persons who have applied for employment in the Army and Air Force Exchange Service (AAFES).

CATEGORIES OF RECORDS IN THE SYSTEM:

Applications generally include individual's name, date of birth, Social Security Number, home address, information on work and educational experience, military service, convictions for offenses against the law, specialized training, awards or honors; documents reflecting results of written examinations and ratings; reference checks and results; evidence of satisfactory physical condition, pre-employment investigations and clearances deemed appropriate to the position for which application is made; notification from AAFES concerning selection/non-selection.

AUTHORITY FOR MAINTENANCE OF THE SYSTEM:

10 U.S.C. 3012, 3013, and 8012.

PURPOSE(S):

The records are used in considering individuals who have applied for positions in the Army and Air Force Exchange Service by making determinations of qualifications including medical qualifications, for positions applied for, and to rate and rank applicants applying for the same or similar positions.

ROUTINE USES OF RECORDS MAINTAINED IN THE SYSTEM, INCLUDING CATEGORIES OF USERS AND THE PURPOSES OF SUCH USES:

In addition to those disclosures generally permitted under 5 U.S.C. 552a(b) of the Privacy Act, these records or information contained therein may specifically be disclosed outside the DoD as a routine use pursuant to 5 U.S.C. 552a(b)(3) as follows:

The 'Blanket Routine Uses' set forth at the beginning of the Army's compilation of systems of records notices apply to this system.

POLICIES AND PRACTICES FOR STORING, RETRIEVING, ACCESSING, RETAINING, AND DISPOSING OF RECORDS IN THE SYSTEM:

STORAGE:

Paper records in file folders.

RETRIEVABILITY:

By applicant's surname.

SAFEGUARDS:

Records are maintained in a secured area with access limited to authorized personnel whose duties require access.

RETENTION AND DISPOSAL:

Applicant records are retained for up to six months; records for applicants hired become part of the person's Official Personnel Folder.

SYSTEM MANAGER(S) AND ADDRESS:

Commander, Army and Air Force Exchange Service, PO Box 660202, Dallas, TX 75266–0202.

NOTIFICATION PROCEDURE:

Individuals seeking to determine whether information about themselves is contained in this systems should address written inquiries to the Commander, Army and Air Force Exchange Service, ATTN: Senior Vice President, People Resources Directorate, PO Box 660202, Dallas, TX 75266–0202.

Individual should provide full name, Social Security Number, current address and telephone number, and sufficient details concerning position and location thereof for which application had been submitted.

RECORD ACCESS PROCEDURES:

Individuals seeking access to information about themselves contained in this system should address written inquiries to the Commander, Army and Air Force Exchange Service, ATTN: Senior Vice President, People Resources Directorate, PO Box 660202, Dallas, TX 75266–0202.

Individual should provide full name, Social Security Number, current address and telephone number, and sufficient details concerning position and location thereof for which application had been submitted.

CONTESTING RECORD PROCEDURES:

The Army's rules for accessing records and for contesting contents and appealing initial agency determinations are contained in Army Regulation 340–21; 32 CFR part 505; or may be obtained from the system manager.

RECORD SOURCE CATEGORIES:

From the individual, his/her previous employer(s) and personal references, law enforcement agencies, medical authorities.

EXEMPTIONS CLAIMED FOR THE SYSTEM:

None.

AAFES 0404.01

SYSTEM NAME:

Incentive Awards Case Files *(July 13, 1995, 60 FR 36111).*

CHANGES:

* * * * *

SYSTEM LOCATION:

Delete 'Army and Air Force Exchange Service-Europe, Pinder Barracks, Schwabacherster 20 8502 Zirndorf' and replace with 'Army and Air Force Exchange Service-Europe Region, Building 4001, In der Witz 14–18, 55252 Mainz-Kastel, Germany'.

* * * * *

AAFES 0404.01

SYSTEM NAME:

Incentive Awards Case Files.

SYSTEM LOCATION:

Headquarters, Army and Air Force Exchange Service, PO Box 660202, Dallas, TX 75266–0202;

Army and Air Force Exchange Service-Europe Region, Building 4001, In der Witz 14–18, 55252 Mainz-Kastel, Germany.

CATEGORIES OF INDIVIDUALS COVERED BY THE SYSTEM:

All U.S. dollar-paid employees of the Army and Air Force Exchange Service who are recipients of awards.

CATEGORIES OF RECORDS IN THE SYSTEM:

Name, Social Security Number, grade/step, position title, award for which nominated and justification therefor, accomplishments, requirements of position held, organization in which employed, and similar relevant data.

AUTHORITY FOR MAINTENANCE OF THE SYSTEM:

10 U.S.C. 3012, 3013, and 8012.

PURPOSE(S):

To consider and select employees for incentive awards and other honors and to publicize those granted.

ROUTINE USES OF RECORDS MAINTAINED IN THE SYSTEM, INCLUDING CATEGORIES OF USERS AND THE PURPOSES OF SUCH USES:

In addition to those disclosures generally permitted under 5 U.S.C. 552a(b) of the Privacy Act, these records or information contained therein may specifically be disclosed outside the DoD as a routine use pursuant to 5 U.S.C. 552a(b)(3) as follows:

Information may be disclosed to public and private organizations, including news media, which grant or publicize employee awards or honors.

The 'Blanket Routine Uses' set forth at the beginning of the Army's compilation of systems of records notices apply to this system.

POLICIES AND PRACTICES FOR STORING, RETRIEVING, ACCESSING, RETAINING, AND DISPOSING OF RECORDS IN THE SYSTEM:

STORAGE:

Paper records in filing cabinets.

RETRIEVABILITY:

By individual's surname.

SAFEGUARDS:

Records are accessible only to designated individuals having official need therefor.

RETENTION AND DISPOSAL:

Records are retained for 2 years, following which they are destroyed by shredding.

SYSTEM MANAGER(S) AND ADDRESS:

Commander, Army and Air Force Exchange Service, PO Box 660202, Dallas, TX 75266–0202.

NOTIFICATION PROCEDURE:

Individuals seeking to determine whether information about themselves is contained in this system should address written inquiries to the Commander, Army and Air Force Exchange Service, ATTN: PE, PO Box 660202, Dallas, TX 75266–0202.

Individual should provide full name, Social Security Number, current address and telephone number, and sufficient details to permit locating the record.

RECORD ACCESS PROCEDURES:

Individuals seeking access to information about themselves contained in this system should address written inquiries to the Commander, Army and Air Force Exchange Service, ATTN: PE, PO Box 660202, Dallas, TX 75266–0202.

Individual should provide full name, Social Security Number, current address and telephone number, and sufficient details to permit locating the record.

CONTESTING RECORD PROCEDURES:

The Army's rules for accessing records and for contesting contents and appealing initial agency determinations are contained in Army Regulation 340–21; 32 CFR part 505; or may be obtained from the system manager.

RECORD SOURCE CATEGORIES:

From the nominating official; approving authority; individual's official personnel file.

EXEMPTIONS CLAIMED FOR THE SYSTEM:

None.

AAFES 0405.03

SYSTEM NAME:

Personnel Appeals and Grievances *(February 22, 1993, 58 FR 10009).*

CHANGES:

* * * * *

SYSTEM LOCATION:

Delete 'HQ Army and Air Force Exchange Service-Europe, Pinder Barracks, Schwabacherster 20 8502 Zirndorf' and replace with 'Army and Air Force Exchange Service-Europe Region, Building 4001, In der Witz 14–18, 55252 Mainz-Kastel, Germany'.

* * * * *

AAFES 0405.03

SYSTEM NAME:

Personnel Appeals and Grievances.

SYSTEM LOCATION:

Office of the General Counsel at Headquarters, Army and Air Force Exchange Service, PO Box 660202, Dallas, TX 75266–0202; and

Army and Air Force Exchange Service-Europe Region, Building 4001, In der Witz 14–18, 55252 Mainz-Kastel, Germany.

CATEGORIES OF INDIVIDUALS COVERED BY THE SYSTEM:

Any employee of the Army and Air Force Exchange Service (AAFES) who has filed an appeal of an adverse action and/or is contesting a personnel action when the appeal/grievance has been referred to the appropriate General Counsel's office.

CATEGORIES OF RECORDS IN THE SYSTEM:

Correspondence, documentation, and memoranda concerning the appeal/grievance.

AUTHORITY FOR MAINTENANCE OF THE SYSTEM:

10 U.S.C. 3012, 3013, and 8012.

PURPOSE(S):

To determine propriety and legal sufficiency or the agency's action in the appeal or grievance matter.

ROUTINE USES OF RECORDS MAINTAINED IN THE SYSTEM, INCLUDING CATEGORIES OF USERS AND THE PURPOSES OF SUCH USES:

In addition to those disclosures generally permitted under 5 U.S.C. 552a(b) of the Privacy Act, these records or information contained therein may specifically be disclosed outside the DoD as a routine use pursuant to 5 U.S.C. 552a(b)(3) as follows:

The 'Blanket Routine Uses' set forth at the beginning of the Army's compilation of systems of records notices apply to this system.

POLICIES AND PRACTICES FOR STORING, RETRIEVING, ACCESSING, RETAINING, AND DISPOSING OF RECORDS IN THE SYSTEM:

STORAGE:

Paper records in locked file cabinets.

RETRIEVABILITY:

By employee's surname.

SAFEGUARDS:

Buildings employ security guards. Records are maintained in areas accessible only to authorized personnel who are properly screened, cleared and trained.

RETENTION AND DISPOSAL:

Retained in the servicing General Counsel's office for 1 year after final decision is made; subsequently retired to the AAFES warehouse or servicing General Services Administration records holding center where it is held 6 years before being destroyed by shredding.

SYSTEM MANAGER(S) AND ADDRESS:

Commander, Army and Air Force Exchange Service, PO Box 660202, Dallas, TX 75266–0202.

NOTIFICATION PROCEDURE:

Individuals seeking to determine whether information about themselves is contained in this system should address written inquiries to the General Counsel at the Army and Air Force Exchange Service location where appeal/grievance was filed.

Individual should provide full name, current address and telephone number, the latest correspondence received by them from the General Counsel's office, if available, and signature.

RECORD ACCESS PROCEDURES:

Individuals seeking access to information about themselves contained in this system should address written inquiries to the General Counsel at the Army and Air Force Exchange Service location where appeal/grievance was filed.

Individual should provide full name, current address and telephone number, the latest correspondence received by them from the General Counsel's office, if available, and signature.

CONTESTING RECORD PROCEDURES:

The Army's rules for accessing records and for contesting contents and appealing initial agency determinations are contained in Army Regulation 340–21; 32 CFR part 505; or may be obtained from the system manager.

RECORD SOURCE CATEGORIES:

From AAFES personnel office responsible for records on the employee; from the AAFES Grievance Examiner; and from the AAFES employee and/or his/her representative.

EXEMPTIONS CLAIMED FOR THE SYSTEM:

None.

AAFES 0408.17

SYSTEM NAME:

HPP Employee Upward Mobility Program Files *(July 13, 1995, 60 FR 36113).*

CHANGES:

* * * * *

SYSTEM LOCATION:

Delete 'HQ Army and Air Force Exchange Service-Europe, Pinder Barracks, Schwabacherster 20 8502 Zirndorf' and replace with 'Army and Air Force Exchange Service-Europe Region, Building 4001, In der Witz 14–18, 55252 Mainz-Kastel, Germany'.

* * * * *

AAFES 0408.17

SYSTEM NAME:

HPP Employee Upward Mobility Program Files.

SYSTEM LOCATION:

Headquarters, Army and Air Force Exchange Service, PO Box 660202, Dallas, TX 75266–0202;

Army and Air Force Exchange Service-Europe Region, Building 4001, In der Witz 14–18, 55252 Mainz-Kastel, Germany; and

Exchange Regions and Area Exchanges at posts, bases, and satellites world-wide. Official mailing addresses are published as an appendix to the Army's compilation of systems of records notices.

CATEGORIES OF INDIVIDUALS COVERED BY THE SYSTEM:

Employees of the Army and Air Force Exchange Service.

CATEGORIES OF RECORDS IN THE SYSTEM:

Name, Social Security Number, current job title, grade, job location, primary career field desired, training courses required, and dates training courses completed.

AUTHORITY FOR MAINTENANCE OF THE SYSTEM:

10 U.S.C. 3012, 3013, and 8012; and E.O. 9397.

PURPOSE(S):

To assist the servicing personnel office in identifying and referring qualified employees for vacant positions.

ROUTINE USES OF RECORDS MAINTAINED IN THE SYSTEM, INCLUDING CATEGORIES OF USERS AND THE PURPOSES OF SUCH USES:

In addition to those disclosures generally permitted under 5 U.S.C. 552a(b) of the Privacy Act, these records or information contained therein may specifically be disclosed outside the DoD as a routine use pursuant to 5 U.S.C. 552a(b)(3) as follows:

The 'Blanket Routine Uses' set forth at the beginning of the Army's compilation of systems of records notices apply to this system.

POLICIES AND PRACTICES FOR STORING, RETRIEVING, ACCESSING, RETAINING, AND DISPOSING OF RECORDS IN THE SYSTEM:

STORAGE:

Paper records in locked file cabinets.

RETRIEVABILITY:

By employee's surname.

SAFEGUARDS:

Information is accessible only to designated individuals having an official need therefor in the performance of assigned duties.

RETENTION AND DISPOSAL:

Records are retained until (a) the associate is promoted into management, at which time the records are incorporated into the person's Official Personnel Folder; (b) the associate severs his/her employment with the Army and Air Force Exchange Service, at which time they are destroyed; or (c) if associate is reinstated at another AAFES location, record is forwarded to the gaining personnel office.

SYSTEM MANAGER(S) AND ADDRESS:

Commander, Army and Air Force Exchange Service, PO Box 660202, Dallas, TX 75266–0202.

NOTIFICATION PROCEDURE:

Individuals seeking to determine whether information about themselves is contained in this system should address written inquiries to the Commander, Army and Air Force Exchange Service, ATTN: Senior Vice President, People Resources Directorate, PO Box 660202, Dallas, TX 75266–0202.

Individual should provide full name, Social Security Number, job location, and duty phone.

RECORD ACCESS PROCEDURES:

Individuals seeking access to information about themselves contained in this system should address written inquiries to the Commander, Army and Air Force Exchange Service, ATTN: Senior Vice President, People Resources Directorate, PO Box 660202, Dallas, TX 75266–0202.

Individual should provide full name, Social Security Number, job location, and duty phone.

CONTESTING RECORD PROCEDURES:

The Army's rules for accessing records and for contesting contents and appealing initial agency determinations are contained in Army Regulation 340–21; 32 CFR part 505; or may be obtained from the system manager.

RECORD SOURCE CATEGORIES:

From the individual.

EXEMPTIONS CLAIMED FOR THE SYSTEM:

None.

AAFES 0409.01

SYSTEM NAME:

AAFES Accident/Incident Reports *(February 22, 1993, 58 FR 10013).*

CHANGES:

* * * * *

SYSTEM LOCATION:

Delete 'HQ Army and Air Force Exchange Service-Europe, Pinder Barracks, Schwabacherster 20 8502 Zirndorf' and replace with 'Army and Air Force Exchange Service-Europe Region, Building 4001, In der Witz 14–18, 55252 Mainz-Kastel, Germany'.

* * * * *

AUTHORITY FOR MAINTENANCE OF THE SYSTEM:

Add 'E.O. 9397' to entry.

* * * * *

NOTIFICATION PROCEDURE:

Delete attention line and replace with 'ATTN: Director, Loss Prevention Division'.

RECORD ACCESS PROCEDURE:

Delete attention line and replace with 'ATTN: Director, Loss Prevention Division'.

* * * * *

AAFES 0409.01

SYSTEM NAME:

AAFES Accident/Incident Reports.

SYSTEM LOCATION:

Safety and Security Offices of Headquarters, Army and Air Force Exchange Service, PO Box 660202, Dallas, TX 75266–0202;

Army and Air Force Exchange Service-Europe Region, Building 4001, In der Witz 14–18, 55252 Mainz-Kastel, Germany; Exchange

Exchange Regions and Area Exchanges at posts, bases, and satellites world-wide. Official mailing addresses are published as an appendix to the Army's compilation of systems of records notices.

CATEGORIES OF INDIVIDUALS COVERED BY THE SYSTEM:

Individuals involved in accidents, incidents, or mishaps resulting in theft or reportable damage to Army and Air Force Exchange Service (AAFES) property or facilities; individuals injured or become ill as a result of such accidents, incidents, or mishaps.

CATEGORIES OF RECORDS IN THE SYSTEM:

AAFES Accident Report, AAFES Incident Report, record of injuries and illnesses; physicians' reports; witness statements; investigatory reports; similar relevant documents.

AUTHORITY FOR MAINTENANCE OF THE SYSTEM:

E.O. 11807 and E.O. 9397.

PURPOSE(S):

To record accidents, incidents, mishaps, fires, theft, etc., involving Government property; and personal injuries/illnesses in connection therewith, for the purposes of recouping damages, correcting deficiencies, initiating appropriate disciplinary action; filing of insurance and/or workmen's compensation claims therefor; and for managerial and statistical reports.

ROUTINE USES OF RECORDS MAINTAINED IN THE SYSTEM, INCLUDING CATEGORIES OF USERS AND THE PURPOSES OF SUCH USES:

In addition to those disclosures generally permitted under 5 U.S.C. 552a(b) of the Privacy Act, these records or information contained therein may specifically be disclosed outside the DoD as a routine use pursuant to 5 U.S.C. 552a(b)(3) as follows:

Information may be disclosed to the Department of Labor to support workmen's compensation claims.

The information in this system may also be released during administrative and judicial proceedings when relevant.

The 'Blanket Routine Uses' set forth at the beginning of the Army's compilation of systems of records notices apply to this system.

POLICIES AND PRACTICES FOR STORING, RETRIEVING, ACCESSING, RETAINING, AND DISPOSING OF RECORDS IN THE SYSTEM:

STORAGE:

Paper records in file folders; computer magnetic tapes and printouts; microfiche.

RETRIEVABILITY:

By name of individual involved or injured and Social Security Number.

SAFEGUARDS:

Records are accessed only by designated individuals having official need therefor in the performance of their duties, within buildings protected by security guards.

RETENTION AND DISPOSAL:

Paper records are retained for 2 years following which it is destroyed by shredding; information on microfiches is retained for 3 years; computer tapes reflecting historical data are permanent.

SYSTEM MANAGER(S) AND ADDRESS:

Commander, Army and Air Force Exchange Service, PO Box 660202, Dallas, TX 75266–0202.

NOTIFICATION PROCEDURE:

Individuals seeking to determine whether information about themselves is contained in this system should address written inquiries to the Commander, Army and Air Force Exchange Service, ATTN: Director, Loss Prevention Division, PO Box 660202, Dallas, TX 75266–0202.

Individual should provide their full name, present address and telephone number; sufficient details concerning the accident, mishap, or attendant injury to permit locating the record, and signature.

RECORD ACCESS PROCEDURES:

Individuals seeking access to information about themselves contained in this system should address written inquiries to the Commander, Army and Air Force Exchange Service, ATTN: Director, Loss Prevention Division, PO Box 660202, Dallas, TX 75266–0202.

Individual should provide their full name, present address and telephone number; sufficient details concerning the accident, mishap, or attendant injury to permit locating the record, and signature.

CONTESTING RECORD PROCEDURES:

The Army's rules for accessing records and for contesting contents and appealing initial agency determinations are contained in Army Regulation 340–21; 32 CFR part 505; or may be obtained from the system manager.

RECORD SOURCE CATEGORIES:

From the individual; medical facilities; investigating official; State Bureau of Motor Vehicles, State and local law enforcement authorities; witnesses; victims; official Department of Defense records and reports.

EXEMPTIONS CLAIMED FOR THE SYSTEM:

None.

AAFES 0502.02

SYSTEM NAME:

Biographical Files *(July 13, 1995, 60 FR 36116).*

CHANGES:

* * * * *

SYSTEM LOCATION:

Delete 'HQ Army and Air Force Exchange Service-Europe, Pinder Barracks, Schwabacherster 20 8502 Zirndorf' and replace with 'Army and Air Force Exchange Service-Europe Region, Building 4001, In der Witz 14–18, 55252 Mainz-Kastel, Germany'.

* * * * *

AAFES 0502.02

SYSTEM NAME:

Biographical Files.

SYSTEM LOCATION:

Headquarters, Army and Air Force Exchange Service, PO Box 660202, Dallas, TX 75266–0202 and the Army and Air Force Exchange Service-Europe Region, Building 4001, In der Witz 14–18, 55252 Mainz-Kastel, Germany.

CATEGORIES OF INDIVIDUALS COVERED BY THE SYSTEM:

Key military and civilian employees of the Army and Air Force Exchange Service world-wide.

CATEGORIES OF RECORDS IN THE SYSTEM:

Individual's name, position title and organizational location, home address, date and place of birth, marital status including names of spouse and children, educational background, military status, awards and decorations, community and civic interest data, photograph, and similar relevant information.

AUTHORITY FOR MAINTENANCE OF THE SYSTEM:

10 U.S.C. 3012, 3013, and 8012.

PURPOSE(S):

To prepare feature articles for hometown newspapers, trade media, community interests, and similar public service groups.

ROUTINE USES OF RECORDS MAINTAINED IN THE SYSTEM, INCLUDING CATEGORIES OF USERS AND THE PURPOSES OF SUCH USES:

In addition to those disclosures generally permitted under 5 U.S.C. 552a(b) of the Privacy Act, these records or information contained therein may specifically be disclosed outside the DoD as a routine use pursuant to 5 U.S.C. 552a(b)(3) as follows:

Information may be disclosed to public and private organizations including news media.

The 'Blanket Routine Uses' set forth at the beginning of the Army's compilation of systems of records notices apply to this system.

POLICIES AND PRACTICES FOR STORING, RETRIEVING, ACCESSING, RETAINING, AND DISPOSING OF RECORDS IN THE SYSTEM:

STORAGE:

Paper records in file folders.

RETRIEVABILITY:

By individual's surname.

SAFEGUARDS:

Records are accessed only by designated individuals having official need therefor, in buildings protected by security guards or military police.

RETENTION AND DISPOSAL:

Records are retained for 1 year following termination of individual's assignment or employment; then destroyed.

SYSTEM MANAGER(S) AND ADDRESS:

Commander, Army and Air Force Exchange Service, PO Box 660202, Dallas, TX 75266–0202.

NOTIFICATION PROCEDURE:

Individuals seeking to determine whether information about themselves is contained in this system should address written inquiries to the Commander, Army and Air Force Exchange Service, ATTN: Director, Public Affairs Division, PO Box 660202, Dallas, TX 75266–0202.

Individual should provide their full name, current address and telephone number, details surrounding the event or incident, and signature.

RECORD ACCESS PROCEDURES:

Individuals seeking access to information about themselves contained in this system should address written inquiries to the Commander, Army and Air Force Exchange Service, ATTN: Director, Public Affairs Division, PO Box 660202, Dallas, TX 75266–0202.

Individual should provide their full name, current address and telephone number, details surrounding the event or incident, and signature.

CONTESTING RECORD PROCEDURES:

The Army's rules for accessing records and for contesting contents and appealing initial agency determinations are contained in Army Regulation 340–21; 32 CFR part 505; or may be obtained from the system manager.

RECORD SOURCE CATEGORIES:

From the individual; official AAFES records and reports.

EXEMPTIONS CLAIMED FOR THE SYSTEM:

None.

AAFES 0607.01

SYSTEM NAME:

Confidential Financial Disclosure Report *(July 13, 1995, 60 FR 36111).*

CHANGES:

* * * * *

SYSTEM LOCATION:

Delete 'HQ Army and Air Force Exchange Service-Europe, Pinder Barracks, Schwabacherster 20 8502 Zirndorf' and replace with 'Army and Air Force Exchange Service-Europe Region, Building 4001, In der Witz 14–18, 55252 Mainz-Kastel, Germany'.

* * * * *

AAFES 0607.01

SYSTEM NAME:

Confidential Financial Disclosure Report.

SYSTEM LOCATION:

Office of the General Counsel at Headquarters, Army and Air Force Exchange Service, PO Box 660202,

Dallas, TX 75266–0202 and Army and Air Force Exchange Service-Europe Region, Building 4001, In der Witz 14–18, 55252 Mainz-Kastel, Germany.

CATEGORIES OF INDIVIDUALS COVERED BY THE SYSTEM:

Each officer of a uniformed service assigned to AAFES whose pay grade is less than O–7 and each employee whose position is classified at Grade 15 (NF–5/Tier 1) or below and whose basic duties and responsibilities require the employee or officer to participate personally and substantially in a way that the final decision or action will have a direct and substantial economic effect on the interests of any non-Federal entity or the agency concludes in accordance with Federal regulation that the duties and responsibilities of the employee's position require the employee to file such a report to avoid involvement in a real or apparent conflict of interest.

CATEGORIES OF RECORDS IN THE SYSTEM:

Standard Form 450, 'Confidential Financial Disclosure Report,' and endorsements or documents relevant to information on this form.

AUTHORITY FOR MAINTENANCE OF THE SYSTEM:

E.O. 12674 as amended by E.O. 12731.

PURPOSE(S):

These records are maintained to meet requirements of E.O. 12674, as amended by E.O. 12731 (5 CFR 2634.901, subpart I), on the policies of Confidential Financial Disclosure Reporting. Such statements are required to assure compliance with the standards of conduct for Government employees contained in the Executive Orders, Federal regulations, and Title 18 of the U.S.C., and to determine if a conflict of interest exists between the employment of individuals by the Federal Government and their personal employment or other financial interests.

ROUTINE USES OF RECORDS MAINTAINED IN THE SYSTEM, INCLUDING CATEGORIES OF USERS AND THE PURPOSES OF SUCH USES:

In addition to those disclosures generally permitted under 5 U.S.C. 552a(b) of the Privacy Act, these records or information contained therein may specifically be disclosed outside the DoD as a routine use pursuant to 5 U.S.C. 552a(b)(3) as follows:

These statements and amended statements required by or pursuant to E.O. 12674, as amended by E.O. 12731, are to be held in confidence and no information shall be disclosed except:

a. To disclose pertinent information to the appropriate Federal, State, or local agency responsible for investigating, prosecuting, enforcing, or implementing a statute, rule, regulation, or order, where the disclosing agency becomes aware of an indication of a violation or potential violation of civil or criminal law or regulation.

b. To disclose information to another Federal agency, to a court, or a party in litigation before a court or in an administrative proceeding being conducted by a Federal agency, either when the Government is party to a judicial proceeding or in order to comply with the issuance of a subpoena.

c. To disclose information to any source when necessary to obtain information relevant to a conflict-of-interest investigation or determination.

d. By the National Archives and Records Administration, General Services Administration, in record management inspections conducted under authority of 44 U.S.C. 2904 and 2906.

e. To disclose, in response to a request for discovery or for appearance of a witness, information that is relevant to the subject matter involved in a pending judicial or administrative proceeding, in which the filer is directly involved.

The 'Blanket Routine Uses' set forth at the beginning of the Army's compilation of systems of records notices apply to this system.

POLICIES AND PRACTICES FOR STORING, RETRIEVING, ACCESSING, RETAINING, AND DISPOSING OF RECORDS IN THE SYSTEM:

STORAGE:

Paper records in locked file cabinets.

RETRIEVABILITY:

By individual's surname.

SAFEGUARDS:

Information is accessible only to designated authorized persons who are properly screened, cleared and trained, having official need therefor in the performance of official duties.

RETENTION AND DISPOSAL:

Retained until individual no longer occupies a position for which Standard Form 450 is required. Destroyed by shredding six years after the individual has left the position, except that documents needed in an on-going investigation will be retained until no longer needed in the investigation.

SYSTEM MANAGER(S) AND ADDRESS:

Commander, Army and Air Force Exchange Service, PO Box 660202, Dallas, TX 75266–0202.

NOTIFICATION PROCEDURE:

Individuals seeking to determine whether information about themselves is contained in this system should address written inquiries to the General Counsel at the Army and Air Force Exchange Service location where the reports were filed.

Individuals should provide their full name, period covered by the report filed, locations(s) of employment, and signature.

RECORD ACCESS PROCEDURES:

Individuals seeking access to information about themselves contained in this system should address written inquiries to the General Counsel at the Army and Air Force Exchange Service location where the reports were filed.

Individuals should provide their full name, period covered by the report filed, locations(s) of employment, and signature.

CONTESTING RECORD PROCEDURES:

The Army's rules for accessing records and for contesting contents and appealing initial agency determinations are contained in Army Regulation 340–21; 32 CFR part 505; or may be obtained from the system manager.

RECORD SOURCE CATEGORIES:

From the individual.

EXEMPTIONS CLAIMED FOR THE SYSTEM:

None.

AAFES 0703.07

SYSTEM NAME:

AAFES Employee Pay System Records *(February 22, 1993, 58 FR 10019).*

CHANGES:

* * * * *

SYSTEM LOCATION:

Delete entry and replace with 'Headquarters, Army and Air Force Exchange Service, PO Box 660202, Dallas, TX 75266-0202;

Commander, Army and Air Force Exchange Service-Pacific Rim Region, Unit 35163, APO AP 96378–0163; and

Commander, Army and Air Force Exchange Service-Europe, Unit 24580, APO AE 09245.'

* * * * *

CATEGORIES OF RECORDS IN THE SYSTEM:

Delete 'management narrative and statistical reports relating to pay, leave and retirement.' and replace with 'management narrative and statistics; reports relating to pay, leave, and retirement; Social Security Numbers of dependents of employees in the Healthy Beginnings Program'.

* * * * *

AUTHORITY FOR MAINTENANCE OF THE SYSTEM:

Add 'E.O. 9397' to entry.

* * * * *

AAFES 0703.07

SYSTEM NAME:

AAFES Employee Pay System Records.

SYSTEM LOCATION:

Headquarters, Army and Air Force Exchange Service, PO Box 660202, Dallas, TX 75266–0202;

Commander, Army and Air Force Exchange Service-Pacific Rim Region, Unit 35163, APO AP 96378–0163; and

Commander, Army and Air Force Exchange Service-Europe, Unit 24580, APO AE 09245.

CATEGORIES OF INDIVIDUALS COVERED BY THE SYSTEM:

Civilian employees of the Army and Air Force Exchange System (AAFES).

CATEGORIES OF RECORDS IN THE SYSTEM:

Employee's name; Social Security Number; AAFES facility number; individual's pay, leave, and retirement records, withholding/deduction authorization for allotments, health benefits, life insurance, savings bonds, financial institutions, etc.; tax exemption certificates; personal exception and indebtedness papers; subsistence and quarters records; statements of charges, claims; roster and signature cards of designated timekeepers; payroll and retirement control and working paper files; unemployment compensation data requests and responses; reports of retirement fund deductions; management narrative and statistical reports relating to pay, leave, and retirement.

AUTHORITY FOR MAINTENANCE OF THE SYSTEM:

Title 6, GAO policy and Procedures Manual for Guidance of Federal Agencies; 10 U.S.C. 3012, 3013, and 8012.

PURPOSE(S):

To provide basis for computing civilian pay entitlements; to record history of pay transactions, leave accrued and taken, bonds due and issued, taxes paid; to answer inquiries and process claims.

ROUTINE USES OF RECORDS MAINTAINED IN THE SYSTEM, INCLUDING CATEGORIES OF USERS AND THE PURPOSES OF SUCH USES:

In addition to those disclosures generally permitted under 5 U.S.C. 552a(b) of the Privacy Act, these records or information contained therein may specifically be disclosed outside the DoD as a routine use pursuant to 5 U.S.C. 552a(b)(3) as follows:

To the Treasury Department to record checks and bonds issued.

To the Internal Revenue Service to report taxable earnings and taxes withheld; to locate delinquent debtors.

To States and Cities/Counties to provide taxable earnings of civilian employees to those states and cities or counties which have entered into an agreement with the Department of Defense and the Department of the Treasury.

To State Employment Offices to provide information relevant to the State's determination of individual's entitlement to unemployment compensation.

To the U.S. Department of Justice/U.S. Attorneys for legal action and/or final disposition of debt claims against the Army and Air Force Exchange Service.

To private collection agencies for collection action when the Army and Air Force Exchange Service has exhausted its internal collection efforts.

The 'Blanket Routine Uses' set forth at the beginning of the Army's compilation of systems of records notices apply to this system.

DISCLOSURE TO CONSUMER REPORTING AGENCIES:

Disclosure pursuant to 5 U.S.C. 552a(b)(12) may be made from this system to 'consumer reporting agencies' as defined in the Fair Credit Reporting Act (15 U.S.C. 1681a(f) or the Federal Claims Collection Act of 1966 (31 U.S.C. 3701(a)(3)).

The disclosure is limited to information necessary to establish the identity of the individual, including name, address, and taxpayer identification number (Social Security Number); the amount, status, and history of the claim; and the agency or program under which the claim arose for the sole purpose of allowing the consumer reporting agency to prepare a commercial credit report.

POLICIES AND PRACTICES FOR STORING, RETRIEVING, ACCESSING, RETAINING, AND DISPOSING OF RECORDS IN THE SYSTEM:

STORAGE:

Paper records in file folders and in bulk storage; card files; computer magnetic tapes, discs and printouts; microfiches, microfilm.

RETRIEVABILITY:

Automated records are retrieved by employee's Social Security Number within payroll block; manual records are retrieved by individual's surname or Social Security Number.

SAFEGUARDS:

Records are restricted to personnel who are properly cleared and trained and have an official need therefor. In addition, integrity of automated data is ensured by internal audit procedures, data base access accounting reports and controls to preclude unauthorized disclosure.

RETENTION AND DISPOSAL:

The majority of documents are retained 4 years after which they are destroyed by shredding. Exceptions are Time and Attendance sheets: retained 6 years; W-2 data and employer quarterly Federal tax returns are retained 5 years; Payroll Registers are permanent.

SYSTEM MANAGER(S) AND ADDRESS:

Commander, HQ Army and Air Force Exchange Service, PO Box 660202, Dallas, TX 75266–0202.

NOTIFICATION PROCEDURE:

Individuals seeking to determine whether information about themselves is contained in this system should address written inquiries to the Commander, HQ Army and Air Force Exchange Service, ATTN: FA, PO Box 660202, Dallas, TX 75266–0202.

Individual should provide their full name, Social Security Number, current address and telephone number; if terminated, include date and place of separation.

RECORD ACCESS PROCEDURES:

Individuals seeking to determine whether information about themselves is contained in this system should address written inquiries to the Commander, HQ Army and Air Force Exchange Service, ATTN: FA, PO Box 660202, Dallas, TX 75266–0202.

Individual should provide their full name, Social Security Number, current address and telephone number; if terminated, include date and place of separation.

CONTESTING RECORD PROCEDURES:

The Army's rules for accessing records and for contesting contents and appealing initial agency determinations are contained in Army Regulation 340–21; 32 CFR part 505; or may be obtained from the system manager.

RECORD SOURCE CATEGORIES:

From the individual; personnel actions; other agency records and reports.

EXEMPTIONS CLAIMED FOR THE SYSTEM:

None.

AAFES 1609.02

SYSTEM NAME:

AAFES Customer Service *(August 2, 1995, 60 FR 39368).*

CHANGES:

* * * * *

SYSTEM LOCATION:

Delete second address and replace with 'Army and Air Force Exchange Service-Europe Region, Building 4001, In der Witz 14–18, 55252 Mainz-Kastel, Germany'.

* * * * *

AAFES 1609.02

SYSTEM NAME:

AAFES Customer Service.

SYSTEM LOCATION:

Headquarters, Army and Air Force Exchange Service, PO Box 660202, Dallas, TX 75266–0202;

Army and Air Force Exchange Service-Europe Region, Building 4001, In der Witz 14–18, 55252 Mainz-Kastel, Germany; and

Exchange Regions and Area Exchanges at posts, bases, and satellites world-wide. Official mailing addresses are published as an appendix to the Army's compilation of systems of records notices.

CATEGORIES OF INDIVIDUALS COVERED BY THE SYSTEM:

Army and Air Force Exchange Service (AAFES) customers who purchase merchandise on a time payment, layaway, or special order basis, or who need purchase adjustments or refunds.

CATEGORIES OF RECORDS IN THE SYSTEM:

Individual's Social Security Number, copies of layaway tickets, requests for refunds, special order forms/procurement request/logs, cash receipt/charge or credit vouchers, repair vouchers, warranty documents, correspondence between AAFES and the customer and/or vendor .

AUTHORITY FOR MAINTENANCE OF THE SYSTEM:

10 U.S.C. 3012, 3013, 8012, 8013, and E.O. 9397.

PURPOSE(S):

To record customer transactions/payment for layaway and special orders; to determine payment status before finalizing transactions; to identify account delinquencies and prepare customer reminder notices; to mail refunds on canceled layaway or special orders; to process purchase refunds; to document receipt from customer of merchandise subsequently returned to vendors for repair or replacement and initiate follow-up actions.

ROUTINE USES OF RECORDS MAINTAINED IN THE SYSTEM, INCLUDING CATEGORIES OF USERS AND THE PURPOSES OF SUCH USES:

In addition to those disclosures generally permitted under 5 U.S.C. 552a(b) of the Privacy Act, these records or information contained therein may specifically be disclosed outside the DoD as a routine use pursuant to 5 U.S.C. 552a(b)(3) as follows:

To monitor individual customer refunds. *See previous comment.*

The 'Blanket Routine Uses' set forth at the beginning of the Army's compilation of systems of records notices apply to this system.

DISCLOSURE TO CONSUMER REPORTING AGENCIES:

Disclosure pursuant to 5 U.S.C. 552a(b)(12) may be made from this system to 'consumer reporting agencies' as defined in the Fair Credit Reporting Act (15 U.S.C. 1681a(f)) or the Federal Claims Collection Act of 1966 (31 U.S.C. 3701(a)(3)).

The disclosure is limited to information necessary to establish the identity of the individual, including name, address, and taxpayer identification number (Social Security Number); the amount, status, and history of the claim; and the agency or program under which the claim arose for the sole purpose of allowing the consumer reporting agency to prepare a commercial credit report.

POLICIES AND PRACTICES FOR STORING, RETRIEVING, ACCESSING, RETAINING, AND DISPOSING OF RECORDS IN THE SYSTEM:

STORAGE:

Paper records in file boxes and cabinets.

RETRIEVABILITY:

By customer's surname, Social Security Number, document control number, and/or due date.

SAFEGUARDS:

Records are maintained in secured areas, accessible only to authorized personnel having need for the information in the performance of their duties.

RETENTION AND DISPOSAL:

Cancelled or completed layaway tickets are held for 6 months after cancellation or delivery of merchandise; purchase orders are retained for 2 years; refund vouchers are retained for 6 years; returned merchandise slips are retained for 6 years; cash receipt vouchers are retained for 3 years; repair/replacement order slips are held 2 years. All records are destroyed by shredding.

SYSTEM MANAGER(S) AND ADDRESS:

Commander, Army and Air Force Exchange Service, PO Box 660202, Dallas, TX 75266–0202.

NOTIFICATION PROCEDURE:

Individuals seeking to determine whether information about themselves is contained in this system should address written inquiries to the Commander, Army and Air Force Exchange Service, ATTN: SD, PO Box 660202, Dallas, TX 75266–0202.

Individual should provide name and sufficient details of purchase to enable locating pertinent records, current address and telephone number.

RECORD ACCESS PROCEDURES:

Individuals seeking access to information about themselves contained in this system should address written inquiries to the Commander, Army and Air Force Exchange Service, ATTN: SD, PO Box 660202, Dallas, TX 75266–0202.

Individual should provide name and sufficient details of purchase to enable locating pertinent records, current address and telephone number.

CONTESTING RECORD PROCEDURES:

The Army's rules for accessing records and for contesting contents and appealing initial agency determinations are contained in Army Regulation 340–21; 32 CFR part 505; or may be obtained from the system manager.

RECORD SOURCE CATEGORIES:

From the individual; vendor.

EXEMPTIONS CLAIMED FOR THE SYSTEM:

None.

[FR Doc. 95–27115 Filed 10–31–95; 8:45 am]

BILLING CODE 5000–04–F

Department of the Navy

Board of Visitors to the United States Naval Academy; Partially Closed Meeting

Pursuant to the provisions of the Federal Advisory Committee Act (5 U.S.C. App. 2), notice is hereby given that the Board of Visitors to the United States Naval Academy will meet on 13 November 1995, at Alumni Hall, United States Naval Academy, Annapolis, MD, at 7:30 a.m. The executive session of this meeting, from approximately 7:30 a.m. to 9:15 a.m., will be closed to the public. Following the executive session the remainder of the meeting will be open to the public.

The purpose of the meeting is to make such inquiry as the Board shall deem necessary into the state of morale and discipline, the curriculum, instruction,

physical equipment, fiscal affairs, and academic methods of the Naval Academy. During the executive session these inquiries will relate to the internal personnel rules and practices of the Academy, may involve on-going criminal investigations, and include discussions of personal information the disclosure of which would constitute a clearly unwarranted invasion of personal privacy. Accordingly, the Secretary of the Navy has determined in writing that the executive session portion of the meeting shall be closed to the public because it will be concerned with matters as outlined in section 552b(c) (2), (5), (6), (7) and (9) of Title 5, United States Code.

For further information concerning this meeting contact: Lieutenant Commander Adam S. Levitt, U.S. Navy, Secretary to the Board of Visitors, Office of the Superintendent, United States Naval Academy, Annapolis, MD 21402-5000; Telephone number: (410)

Dated: October 27, 1995

M. A. Waters,

LCDR, JAGC, USN, Federal Register Liaison Officer.

[FR Doc. 95–27088 Filed 10–31–95; 8:45 am]

BILLING CODE 3810–FF–F

DEPARTMENT OF ENERGY

Radioactive Waste Processing and Volume Reduction Technology Study

AGENCY: Department of Energy.

ACTION: Notice of availability.

SUMMARY: The Department of Energy has issued a study that reviews the technologies that are available and the technologies that are being developed for the potential processing or volume reduction of transuranic radioactive wastes. The study includes: an identification of technologies involving the use of chemical, physical, and thermal (including plasma) processing techniques. The study is available upon request.

ADDRESSES: The study is available at the Public Reading Room (Room 1E190), U.S. Department of Energy, 1000 Independence Avenue, S.W., Washington, D.C., 20585, Monday–Friday, excluding Federal holidays. Copies of the study have also been placed in the following Waste Isolation Pilot Plant (WIPP) reading rooms: WIPP Public Reading Room, National Atomic Museum, U.S. Department of Energy, Albuquerque Operations Office, P.O. Box 5400, Albuquerque, New Mexico 87115; Thomas Brannigan Memorial Library, 200 E. Picacho, Las Cruces, New Mexico 88005; New Mexico State Library, 325 Don Gaspar, Santa Fe, New Mexico 87503; Pannell Library, New Mexico Junior College, 5317 Lovington Highway, Hobbs, New Mexico 88240; Carlsbad Public Library, 101 S. Halagueno, Carlsbad, New Mexico 88220; Zimmerman Library, Government Publications Department, University of New Mexico, Albuquerque, New Mexico 87138; and Martin Speare Memorial Library, New Mexico Institute of Mining and Technology, Campus Station, Socorro, New Mexico 87801; Raton Public Library, 244 Cook Avenue, Raton, New Mexico 87740.

FOR FURTHER INFORMATION CONTACT: Ms. Pat Sallani, Carlsbad Area Office, U.S. Department of Energy, Post Office Box 3090, Carlsbad, New Mexico 88220–3090, at (505) 234–7313.

SUPPLEMENTARY INFORMATION: This study has been prepared under section 19 of Public Law 102–579, the Waste Isolation Pilot Plant Land Withdrawal Act. The study summarizes 35 categories of technologies that may be applicable to the thermal and non-thermal treatment of transuranic waste. It reviews 219 potential candidate processes that are at various stages of development and provides for each process: A description, process objective, process type, applicable waste types, process maturity, and final waste form. The Waste Isolation Pilot Plant is a research and development facility located in southeastern New Mexico with the mission to demonstrate the safe disposal of transuranic radioactive wastes resulting from defense activities and programs of the United States.

Thomas P. Grumbly,

Assistant Secretary for Environmental Management.

[FR Doc. 95–26965 Filed 10–31–95; 8:45 am]

BILLING CODE 6450–01–P

Bonneville Power Administration

Notice of Availability of Record of Decision for Firm Non-Requirements Products and Services Contracts

AGENCY: Bonneville Power Administration (BPA), Department of Energy (DOE).

ACTION: Notice of availability of Record of Decision (ROD).

SUMMARY: BPA has decided to offer long-term firm non-requirements (FNR) products and services contracts that can be customized for interested utility and Direct Service Industry (DSI) customers or other purchasers needing products and services beyond those which BPA is obligated to provide by statute. These contracts are for the sale of electric power and other power-related products. BPA would provide for transmission and other services associated with the sale of electric power, either in the FNR contract or in separate, companion contracts. BPA would negotiate the FNR contracts to meet customers' needs. In making this decision, BPA is continuing its Market-Driven approach for participation in the increasingly competitive electric power market.

This notice announces the availability of the ROD to offer long-term FNR contracts. This decision is consistent with BPA's Business Plan, Business Plan Environmental Impact Statement (BP EIS)(DOE/EIS–0183, June 1995) and the Business Plan ROD (August 15, 1995).

ADDRESSES: Copies of this ROD, the BP EIS, and the Business Plan ROD may be obtained by calling BPA's toll-free document request line: 1–800–622–4520.

FOR FURTHER INFORMATION CONTACT: Katherine S. Pierce, Environmental Specialist—ECN, Bonneville Power Administration, P.O. Box 3621, Portland, Oregon, 97208–3621, phone number (503) 230–3962, fax number (503) 230–5699.

Public Availability: This ROD will be distributed to all interested and affected persons and agencies.

Issued in Portland, Oregon, on October 17, 1995.

Sue F. Hickey,

Acting Administrator.

[FR Doc. 95–26964 Filed 10–31–95; 8:45 am]

BILLING CODE 6450–01–P

Federal Energy Regulatory Commission

[Docket No. ER96–44–000, et al.]

Central Hudson Gas and Electric Corporation, et al.; Electric Rate and Corporate Regulation Filings

October 24, 1995.

Take notice that the following filings have been made with the Commission:

1. Central Hudson Gas and Electric Corporation

[Docket No. ER96–44–000]

Take notice that on October 6, 1995, Central Hudson Gas and Electric Corporation (CHG&E), tendered for filing pursuant to § 35.12 of the Federal Energy Regulatory Commission's (Commission) Regulations in 18 CFR a Service Agreement between CHG&E and Associated Power Services Inc. The

terms and conditions of service under this Agreement are made pursuant to CHG&E's FERC Electric Rate Schedule, Original Volume I (Power Sales Tariff) accepted by the Commission in Docket No. ER94–1662. CHG&E also has requested waiver of the 60-day notice provision pursuant to 18 CFR 35.11.

A copy of this filing has been served on the Public Service Commission of the State of New York.

Comment date: November 7, 1995, in accordance with Standard Paragraph E at the end of this notice.

2. The Cleveland Electric Illuminating Company, Duquesne Light Company, Ohio Edison Company, Pennsylvania Power Company and Toledo Edison Company

[Docket No. ER95–1194–001]

Take notice that on October 12, 1995, The Cleveland Electric Illuminating Company, Duquesne Light Company, Ohio Edison Company, Pennsylvania Power Company and Toledo Edison Company, tendered for filing a proposed revision to the June 9, 1995 filing (Filing) of their FERC Electric Service Rate Schedule Nos. 26, 24, 160, 45 and 36 respectively.

The Filing amends the CAPCO Basic Operating Agreement (Agreement) to permit any two parties to the Agreement to provide capacity and associated energy in connection with scheduled maintenance on a willing supplier/willing receiver basis. The tendered revision to the Filing has been made to comply with the Commission's Order of September 12, 1995 in this proceeding.

Copies of the tendered revision to the Filing were served upon the Public Utilities Commission of Ohio and the Pennsylvania Public Utility Commission.

Comment date: November 7, 1995, in accordance with Standard Paragraph E at the end of this notice.

3. Public Service Company of Oklahoma

[Docket No. ER96–68–000]

Take notice that on October 11, 1995, Public Service Company of Oklahoma (PSO) submitted a service agreement establishing Carthage Water and Electric Plant Board of the City of Carthage, Missouri (Carthage) as a customer under the terms of PSO's umbrella Coordination Sales Tariff CST–1 (CST–1 Tariff).

PSO requests an effective date of October 1, 1995, and accordingly, seeks waiver of the Commission's notice requirements. Copies of this filing were served upon Carthage and the Oklahoma Corporation Commission.

Comment date: November 7, 1995, in accordance with Standard Paragraph E at the end of this notice.

4. Duquesne Light Company

[Docket No. ER96–69–000]

Take notice that on October 12, 1995, Duquesne Light Company (DLC) filed a Service Agreement dated August 16, 1995 with Louis Dreyfus Electric Power, Inc. under DLC's FERC Coordination Sales Tariff (Tariff). The Service Agreement adds Louis Dreyfus Electric Power, Inc. as a customer under the Tariff. DLC requests an effective date of October 6, 1995 for the Service Agreement.

Comment date: November 7, 1995, in accordance with Standard Paragraph E at the end of this notice.

5. Consolidated Edison Company of New York, Inc.

[Docket No. ER96–70–000]

Take notice that on October 12, 1995, Consolidated Edison Company of New York, Inc. (Con Edison), tendered for filing an agreement with CNG Power Service Corporation (CNG) to provide for the sale and purchase of energy and capacity. For energy sold by Con Edison the ceiling rate is 100 percent of the incremental energy cost plus up to 10 percent of the SIC (where such 10 percent is limited to 1 mill per KWhr when the SIC in the hour reflects a purchased power resource). The ceiling rate for capacity sold by Con Edison is $7.70 per megawatt hour. All energy and capacity sold by CNG will be at market-based rates.

Con Edison states that a copy of this filing has been served by mail upon CNG.

Comment date: November 7, 1995, in accordance with Standard Paragraph E at the end of this notice.

6. PacifiCorp

[Docket No. ER96–72–000]

Take notice that on October 12, 1995, PacifiCorp, tendered for filing in accordance with 18 CFR Part 35 of the Commission's Rules and Regulations, Amendment No. 3 to the Long-Term Power Sales Agreement between PacifiCorp and Southern California Edison Company (SCE), PacifiCorp Rate Schedule FERC No. 248.

PacifiCorp requests an effective date of January 1, 1996 be assigned to the amendment.

Copies of this filing were supplied to SCE, the Washington Utilities and Transportation Commission, the Public Utility Commission of Oregon and the Public Utilities Commission of the State of California.

A copy of this filing may be obtained from PacifiCorp's Regulatory Administration Department's Bulletin Board System through a personal computer by calling (503) 464–6122 (9600 baud, 8 bits, no parity, 1 stop bit).

Comment date: November 7, 1995, in accordance with Standard Paragraph E at the end of this notice.

7. Tucson Electric Power Company

[Docket No. ER96–73–000]

Take notice that on October 12, 1995, Tucson Electric Power Company (Tucson), tendered for filing a Service Agreement (the ''Agreement''), effective as of October 6, 1995 with the City of Needles (Needles). The Agreement provides for the sale by Tucson to Needles of economy energy from time to time at negotiated rates in accordance with Service Schedule A of Tucson's Coordination Tariff, Volume 1, Docket No. ER94–1437–000. Tucson requests an effective date of October 6, 1995, and therefore requests all applicable waivers.

Copies of this filing have been served upon all parties affected by this proceeding.

Comment date: November 7, 1995, in accordance with Standard Paragraph E at the end of this notice.

8. Portland General Electric Company

[Docket No. ER96–74–000]

Take notice that on October 12, 1995, Portland General Electric Company (PGE), tendered for filing under FERC Electric Tariff, Original Volume No. 3, an executed Service Agreement between PGE and the Bonneville Power Administration.

Pursuant to 18 CFR 35.11, and the Commission's Order in Docket No. PL93–2–002 issued July 30, 1993, PGE respectfully requests that the Commission grant a waiver of the notice requirements of 18 CFR 35.3 to allow the executed service agreement to become effective September 29, 1995.

Copies of this filing were served upon the Bonneville Power Administration.

Comment date: November 7, 1995, in accordance with Standard Paragraph E at the end of this notice.

9. Pennsylvania Power & Light Company

[Docket No. ER96–75–000]

Take notice that on October 13, 1995, Pennsylvania Power & Light Company (PP&L), tendered for filing with the Federal Energy Regulatory Commission two Service Agreements (the Agreement) between PP&L, and Coastal Electric Services Co., dated September 5, 1995; and (2) Enron Power Marketing, Inc., dated October 9, 1995.

The Agreements supplement a Short Term Capacity and Energy Sales umbrella tariff approved by the Commission in Docket No. ER95–782–000 on June 21, 1995.

In accordance with the policy announced in *Prior Notice and Filing Requirements Under Part II of the Federal Power Act,* 64 FERC ¶ 61,139, *clarified and reh'g granted in part and denied in part,* 65 FERC ¶ 61,081 (1993), PP&L requests the Commission to make the Agreement effective on October 13, 1995, because service will be provided under an umbrella tariff and each service agreement is filed within 30 days after the commencement of service. In accordance with 18 CFR 35.11, PP&L has requested waiver of the sixty-day notice period in 18 CFR 35.2(e). PP&L has also requested waiver of certain filing requirements for information previously filed with the Commission in Docket No. ER95–782–000.

PP&L states that a copy of its filing was provided to the customers involved and to the Pennsylvania Public Utility Commission.

Comment date: November 7, 1995, in accordance with Standard Paragraph E at the end of this notice.

10. Vermont Electric Transmission Company, Inc.

[Docket No. ER96–76–000]

Take notice that on October 13, 1995, Vermont Electric Transmission Company, Inc. (VETCO) tendered for filing a proposed change to its Rate Schedule FERC No. 2.

As more fully set forth therein, the rate change would permit VETCO to calculate state and federal income taxes, and to reflect such calculations in the rates charged under the rate schedule, in accordance with Statement of Financial Accounting Standards No. 109. VETCO requests an effective date of October 1, 1995.

VETCO states that a copy of its filing was served on all parties listed on the attached Service List.

Comment date: November 7, 1995, in accordance with Standard Paragraph E at the end of this notice.

11. Vermont Electric Transmission Company, Inc.

[Docket No. ER96–77–000]

Take notice that on October 13, 1995, Vermont Electric Transmission Company, Inc. tendered for filing a petition for waiver of Rule 35.13 filing requirements.

Comment date: November 7, 1995, in accordance with Standard Paragraph E at the end of this notice.

12. Ohio Edison Company Pennsylvania Power Company

[Docket No. ER96–78–000]

Take notice that on October 13, 1995, Ohio Edison Company tendered for filing on behalf of itself and Pennsylvania Power Company, an Agreement for System Power Transactions with NorAm Energy Services, Inc., dated October 12, 1995. This initial rate schedule will enable the parties to purchase or sell capacity and energy in accordance with the terms and conditions set forth in the Agreement.

Comment date: November 7, 1995, in accordance with Standard Paragraph E at the end of this notice.

13. MidAmerican Energy Company

[Docket No. ER96–79–000]

Take notice that on October 13, 1995, MidAmerican Energy Company (MidAmerican), One River Center Place, 106 East Second Street, P.O. Box 4350, Davenport, Iowa 52808, filed a Notice of Cancellation, effective on June 30, 1995, of Rate Schedule FERC No. 1 and Supplement Nos. 1 through 6 thereto which became effective on March 19, 1984 and were filed with the Commission in Docket No. ER84–325–000 by ENEREX, a partnership, and its member companies. The Filing includes a Certificate of Concurrence of IES Utilities Inc. (IES), the other surviving partner of the ENEREX partnership.

MidAmerican further states that the Rate Schedule FERC No. 1 is being canceled because the ENEREX partners have entered into a Dissolution of ENEREX Partnership Agreement which provides for the dissolution of the partnership effective on June 30, 1995, and, pursuant to Section 4.01 of the Interchange Agreement which constitutes Rate Schedule FERC No. 1, the Interchange Agreement shall terminate upon termination of the ENEREX partnership.

MidAmerican requests an effective date of June 30, 1995, for the cancellation of Rate Schedule FERC No. 1 and Supplement Nos. 1 through 6 thereto and a waiver of the provisions of § 35.15 requiring the Notice of Cancellation to be filed at least 60 days prior to such date.

Copies of filing were served on IES, the Iowa Utilities Board, the Illinois Commerce Commission and the South Dakota Public Utilities Commission.

Comment date: November 7, 1995, in accordance with Standard Paragraph E at the end of this notice.

14. PacifiCorp

[Docket No. ER96–80–000]

Take notice that PacifiCorp on October 13, 1995, tendered for filing a Long-Term Power Sales Agreement dated September 27, 1995 (Agreement) between PacifiCorp and Springfield Utility Board (Springfield).

PacifiCorp requests that a waiver of prior notice be granted and that an effective date of one day after the Commission receives this filing be assigned to the Agreement.

Copies of this filing were supplied to Springfield, the Public Utility Commission of Oregon and the Washington Utilities and Transportation Commission.

Comment date: November 7, 1995, in accordance with Standard Paragraph E at the end of this notice.

Standard Paragraph

E. Any person desiring to be heard or to protest said filing should file a motion to intervene or protest with the Federal Energy Regulatory Commission, 825 North Capitol Street, NE., Washington, DC 20426, in accordance with Rules 211 and 214 of the Commission's Rules of Practice and Procedure (18 CFR 385.211 and 18 CFR 385.214). All such motions or protests should be filed on or before the comment date. Protests will be considered by the Commission in determining the appropriate action to be taken, but will not serve to make protestants parties to the proceeding. Any person wishing to become a party must file a motion to intervene. Copies of this filing are on file with the Commission and are available for public inspection.

Lois D. Cashell,

Secretary.

[FR Doc. 95–27020 Filed 10–31–95; 8:45 am]

BILLING CODE 6717–01–P

[Project No. 459–054, Missouri]

Union Electric Company; Notice of Availability of Environmental Assessment

October 26, 1995.

In accordance with the National Environmental Policy Act of 1969 and the Federal Energy Regulatory Commission's Regulations, 18 CFR Part 380 (Order No. 486, 52 FR 47910), the Office of Hydropower Licensing (OHL) reviewed an application for dredging on the Lake of the Ozarks at the Osage Project. The applicant proposes to excavate approximately 2,675 cy of material for the purpose of providing boat access to 17 existing boat docks.

The proposed excavation will occur on project lands and waters in Benton County, Missouri. The primary purpose of the excavation activity is to provide boat access to project waters for private recreational use. The staff prepared an Environmental Assessment (EA) for the actions. In the EA, staff concludes that approval of the non-profit use of project lands would not constitute a major federal action significantly affecting the quality of the human environment.

Copies of the EA are available for review in the Reference and Information Center, Room 2A, of the Commission's offices at 888 First Street, N.E., Washington, D.C. 20426.

Linwood A. Watson, Jr.,

Acting Secretary.

[FR Doc. 95–27015 Filed 10–31–95; 8:45 am]

BILLING CODE 6717–01–M

[Docket No. RP95–149–000 and RP95–263–000]

ANR Pipeline Company; Notice of Rescheduling of Informal Settlement Conference

October 26, 1995.

Take notice that an informal settlement conference previously scheduled for Monday, November 6, 1995, has been rescheduled, and will be convened in this proceeding on Monday, November 13, 1995, at 1:00 p.m., at the offices of the Federal Energy Regulatory Commission, 888 First Street, NE., Washington, DC, for the purpose of exploring the possible settlement of the above-referenced docket.

Any party, as defined by 18 CFR 385.102(c), or any participant as defined in 18 CFR 385.102(b), is invited to attend. Persons wishing to become a party must move to intervene and receive intervenor status pursuant to the Commission's regulations (18 CFR 385.214).

For additional information, please contact William J. Collins, (202) 208–0248, or Mary C. Hain, (202) 208–1087.

Linwood A. Watson, Jr.,

Acting Secretary.

[FR Doc. 95–27019 Filed 10–31–95; 8:45 am]

BILLING CODE 6717–01–M

[Docket No. RP86–168–022]

Columbia Gas Transmission Corporation; Notice of Refund Report

October 26, 1995.

Take notice that on August 21, 1995, Columbia Gas Transmission Corporation (Columbia) tendered for filing with the Commission a report summarizing refunds flowed through to customers in the form of credits to invoices issued on or around July 10, 1995, which were payable to Columbia on or before July 20, 1995, that portion of the refund received by Columbia from Wyoming Interstate Company in Docket No. RP85–39 applicable to the period 4/1/1987–3/31/1990. Columbia states that interest was included in the amount refunded to each customer calculated through July 19, 1995, in accordance with Section 154.67(c)(2) of the Commission's Regulations. Columbia states that this refund is being flowed through in accordance with Article I Section C of Columbia's Global Settlement in Docket No. RP86–168–020.

Any person desiring to protest said filing should file a protest with the Federal Energy Regulatory Commission, 888 First Street, N.E., Washington, D.C. 20426, in accordance with Rule 211 of the Commission's Rules of Practice and Procedure (18 CFR 385.211). All such protests should be filed on or before November 2, 1995. Protests will be considered by the Commission in determining the appropriate action to be taken, but will not serve to make protestants parties to the proceeding. Copies of this filing are on file with the Commission and are available for public inspection.

Linwood A. Watson, Jr.,

Acting Secretary.

[FR Doc. 95–27016 Filed 10–31–95; 8:45 am]

BILLING CODE 6717–01–M

[Docket No. RP94–219–007]

Columbia Gulf Transmission Company; Notice of Refund Report

October 26, 1995.

Take notice that on October 13, 1995, Columbia Gulf Transmission Company (Columbia Gulf) tendered for filing with the Commission a report summarizing refunds disbursed on September 13, 1995, to its customers for the period November 1, 1994 through July 31, 1995, in the amount of $12,624,759.30 ($12,183,920.23 principal and $440,839.07 interest) in the above referenced docket.

Columbia Gulf states that the refunds were made in accordance with the terms of the May 1, 1995 Offer of Settlement filed in the above referenced docket and approved by the Commission on July 18, 1995. The refund report includes interest computed in accordance with Section 154.67(c)(2) of the Commission's Regulations.

Any person desiring to protest said filing should file a protest with the Federal Energy Regulatory Commission, 888 First Street NE., Washington, DC 20426, in accordance with Rule 211 of the Commission's Rules of Practice and Procedure (18 CFR 385.211). All such protests should be filed on or before November 2, 1995. Protests will be considered by the Commission in determining the appropriate action to be taken, but will not serve to make the protestants parties to the proceeding. Copies of this filing are on file with the Commission and are available for public inspection.

Linwood A. Watson, Jr.,

Acting Secretary.

[FR Doc. 95–27018 Filed 10–31–95; 8:45 am]

BILLING CODE 6717–01–M

[Docket No. PR96–1–000]

Equitable Storage Company; Notice of Petition for Rate Approval

October 26, 1995.

Take notice that on October 17, 1995, Equitable Storage Company (Equitable) filed pursuant to Section 284.123(b)(2) of the Commission's Regulations, a petition for rate approval requesting that the Commission approve as fair and equitable, market-based rates for firm and interruptible storage services. Equitable states that the rates for firm and interruptible storage services will be negotiated between Equitable and the various shippers. Equitable intends to conduct an open season for the initial offering to commence on November 13, 1995, and continue through November 24, 1995.

Equitable states that it is an intrastate pipeline within the meaning of Section 2(16) of the NGPA. Equitable is the developer and sole owner of the Jefferson Island Underground Gas Storage Facility (Jefferson Island) located in Iberia and Vermilion Parishes, Louisiana, which is the subject of its petition. Equitable will commit all or a portion of its Jefferson Island storage capacity to the performance of storage services for third parties, including parties utilizing these services in support of intrastate and interstate commerce. Equitable's willingness to undertake interstate storage services is based on Equitable's ability to do so under NGPA Section 311(a)(2), and at negotiated, market-based rates.

Pursuant to Section 284.123(b)(2)(ii), if the Commission does not act within 150 days of the filing date, the rate will be deemed to be fair and equitable and not in excess of an amount which interstate pipelines would be permitted to charge for similar transportation service. The Commission may, prior to the expiration of the 150-day period, extend the time for action or institute a proceeding to afford parties an opportunity for written comments and for the oral presentation of views, data, and arguments.

Any person desiring to participate in this rate proceeding must file a motion to intervene in accordance with Sections 385.211 and 385.214 of the Commission's Rules of Practice and Procedures. All motions must be filed with the Secretary of the Commission on or before November 20, 1995. The petition for rate approval is on file with the Commission and is available for public inspection.

Linwood A. Watson, Jr.,

Acting Secretary.

[FR Doc. 95–27059 Filed 10–31–95; 8:45 am]

BILLING CODE 6717–01–M

[Docket No. GT96–6–000]

Kern River Gas Transmission Company; Notice of Refund Report

October 26, 1995.

Take notice that on October 17, 1995, Kern River Gas Transmission Company (Kern River) tendered for filing a refund report pursuant to the Commission's May 3, 1995, ''Order Granting Clarification'' issued in Docket No. RP95–124–001.

Kern River states that it has refunded the Gas Research Institute (GRI) demand surcharge refund received from GRI based on the non-discounted GRI dollars paid by each firm shipper during the 1994 calendar year as a percentage of the total non-discounted GRI demand dollars paid by all firm shippers. Kern River further states that it made these refunds in the form of credits to invoices issued on October 6, 1995. The total amount credited was $646,159.

Any person desiring to be heard or to protest said filing should file a motion to intervene or protest with the Federal Energy Regulatory Commission, 888 First Street, N.E., Washington, D.C. 20426, in accordance with Rules 211 and 214 of the Commission's Rules of Practice and Procedure (18 CFR 385.211 and 385.214). All such motions or protests should be filed on or before November 2, 1995. Protests will be considered by the Commission in determining the appropriate action to be taken, but will not serve to make protestants parties to the proceeding. Any person wishing to become a party must file a motion to intervene. Copies of this filing are on file with the Commission and are available for public inspection.

Linwood A. Watson, Jr.,

Acting Secretary.

[FR Doc. 95–27011 Filed 10–31–95; 8:45 am]

BILLING CODE 6717–01–M

[Docket No. RP94–149–000 and RP94–145–000]

Pacific Gas Transmission Company; Notice of Informal Settlement Conference

October 26, 1995.

Take notice that an informal settlement conference will be convened in this proceeding on Wednesday, November 15, 1995 at 1:00 p.m. and continue on through Thursday, November 16, and Friday, November 17, 1995, at the offices of the Federal Energy Regulatory Commission, 888 First Street, N.E., Washington, DC, for the purpose of exploring the possible settlement of the above-referenced docket.

Any party, as defined by 18 CFR 385.102(c), or any participant as defined in 18 CFR 385.102(b), is invited to attend. Persons wishing to become a party must move to intervene and receive intervenor status pursuant to the Commission's regulations (18 CFR 385.214).

For additional information, please contact Betsy R. Carr (202) 208–1240 or Russell B. Mamone (202) 208–0740.

Linwood A. Watson, Jr.,

Acting Secretary.

[FR Doc. 95–27017 Filed 10–31–95; 8:45 am]

BILLING CODE 6717–01–M

[Docket No. GT96–17–000]

Transcontinental Gas Pipe Line Corporation; Notice of Proposed Changes in FERC Gas Tariff

October 26, 1995

Take notice that on October 23, 1995, Transcontinental Gas Pipe Line Corporation (Transco) tendered for filing to become part of its FERC Gas Tariff, Original Volume No. 2, First Revised Sheet No. 3191. The proposed effective date of such tariff sheet is December 1, 1995.

Transco states that the purpose of the instant filing is to terminate Section 7(c) firm transportation service under Rate Schedule X–285 and to convert such service to service provided under Rate Schedule FT pursuant to Transco's blanket transportation certificate and Part 284 of the Commission's regulations effective December 1, 1995. In that regard, Transco and its APEC shippers have agreed that, as part of the conversion process, converting APEC shippers will be entitled to elect annual firm transportation service in lieu of seasonal (November 15 through March 31) service. Brooklyn Union Gas Company (BUG) has notified Transco of its election to convert its APEC service to annual firm transportation service.

The rates applicable to the converted service are the generally applicable charges under Rate Schedule FT (including fuel), plus reservation and commodity rate surcharges a set forth on Original Sheet No. 40E to Transco's Third Revised Volume No. 1 Tariff which is currently pending before the Commission in Docket No. GT95–64–000. Original Sheet No. 40E sets forth the charges applicable to APEC firm transportation service which has been converted from individually certificated Section 7(c) firm transportation service to annual firm transportation service under Transco's blanket certificate and Part 284 of the Commission's regulations.

Transco states that copies of the filing are being mailed to BUG and interested State Commissions.

Any person desiring to be heard or to protest said filing should file a motion to intervene or protest with the Federal Energy Regulatory Commission, 888 First Street, N.E. Washington, D.C. 20426, in accordance with Sections 385.214 and 385.211 of the Commission's Rules and Regulations. All such motions or protests should be filed on or before November 2, 1995. Protests will be considered by the Commission in determining the appropriate action to be taken, but will not serve to make protestants parties to the proceeding. Any person wishing to become a party must file a motion to intervene. Copies of this filing are on file with the Commission and are available for public inspection in the Public Reference Room.

Linwood A. Watson, Jr.,

Acting Secretary.

[FR Doc. 95–27014 Filed 10–31–95; 8:45 am]

BILLING CODE 6717–01–M

[Docket No. GT 96–16–000]

Transcontinental Gas Pipe Line Corporation; Notice of Proposed Changes in FERC Gas Tariff

October 26, 1995.

Take notice that on October 23, 1995, Transcontinental Gas Pipe Line Corporation (Transco) tendered for filing certain revised tariff sheets to its FERC Gas Tariff, Third Revised Volume No. 1 and Original Volume No. 2, which tariff sheets are included in Appendix A attached to the filing. The proposed effective date of such tariff sheets is December 1, 1995.

Transco states that the purpose of the instant filing is to terminate Section 7(c) firm transportation service under Rate Schedules X–295 and X–298 and to convert such service to service provided under Rate Schedule FT pursuant to Transco's blanket transportation certificate and Part 284 of the Commission's regulations effective December 1, 1995. Currently, the System Expansion (SEP) service is billed on an annual basis. However, upon conversion to Part 284 service, Transco, City of Fountain Inn, South Carolina and City of Kings Mountain, North Carolina have agreed that the converted SEP service will be billed on a seasonal basis corresponding to the period during which Transco provides SEP service (i.e. November through March).

The charges applicable to SEP firm transportation service which has been converted from individually certificated Section 7(c) firm transportation service to annual firm transportation service under Transco's blanket certificate and Part 284 of the Commission's regulations are set forth on Original Sheet No. 40F which is currently pending before the Commission in Docket No. GT95–63–000.

Transco states that copies of the filing are being mailed to the converting SEP shippers and interested State Commissions.

Any person desiring to be heard or to protest said filing should file a motion to intervene or protest with the Federal Energy Regulatory Commission, 888 First Street, N.E., Washington, D.C. 20426, in accordance with Sections 385.214 and 385.211 of the Commission's Rules and Regulations. All such motions or protests should be filed on or before November 2, 1995. Protests will be considered by the Commission in determining the appropriate action to be taken, but will not serve to make protestants parties to the proceeding. Any person wishing to become a party must file a motion to intervene. Copies of this filing are on file with the Commission and are available for public inspection in the Public Reference Room.

Linwood A. Watson, Jr.,

Acting Secretary.

[FR Doc. 95–27013 Filed 10–31–95; 8:45 am]

BILLING CODE 6717–01–M

[Docket No. GT96–10–000]

Transcontinental Gas Pipe Line Corporation; Notice of Refund Report

October 26, 1995.

Take notice that on October 17, 1995, Transcontinental Gas Pipe Line Corporation (Transco) tendered for filing a refund report pursuant to the Commission's February 22, 1995, ''Order Approving Refund Methodology for 1994 Overcollections'' issued in Docket No. RP95–124–000.

Transco states that on October 13, 1995, it flowed through amounts refunded to Transco by Gas Research Institute (GRI) in accordance with the Commission's February 22, 1995 order. Transco further states that in accordance with ordering paragraph (c) in the February 22, Order, Transco has calculated the refund due each firm shipper based on the non-discounted GRI demand dollars paid by each firm shipper during the 1994 calendar year as a percentage of the total non-discounted GRI demand dollars paid by all firm shippers. Transco states that the total amount of the 1994 GRI refund was $2,604,535.

Any person desiring to be heard or to protest said filing should file a motion to intervene or a protest with the Federal Energy Regulatory Commission, 888 First Street NE., Washington, DC 20426, in accordance with Rules 211 and 214 of the Commission's Rules of Practice and Procedure (18 CFR 385.211 and 385.214). All such motions or protests should be filed on or before November 2, 1995. Protests will be considered by the Commission in determining the appropriate action to be taken, but will not serve to make protestants parties to the proceeding. Any person wishing to become a party must file a motion to intervene. Copies of this filing are on file with the Commission and are available for public inspection.

Linwood A. Watson, Jr.,

Acting Secretary.

[FR Doc. 95–27012 Filed 10–31–95; 8:45 am]

BILLING CODE 6717–01–M

ENVIRONMENTAL PROTECTION AGENCY

[FRL–5323–6]

National Drinking Water Advisory Council; Request for Nominations

The U.S. Environmental Protection Agency (EPA) invites all interested persons to nominate qualified individuals to serve as members of the National Drinking Water Advisory Council. This Advisory Council was established to provide practical and independent advice, consultation and recommendations to the Agency on the activities, functions and policies related to the implementation of the Safe Drinking Water Act as amended. The Council consists of fifteen members, including a Chairperson. Five members represent the general public; five members represent appropriate state and local agencies concerned with water hygiene and public water supply; and five members represent private organizations or groups demonstrating an active interest in the field of water hygiene and public water supply. Each member holds office for a term of three years and is eligible for reappointment. On December 15 of each year, five members complete their appointment. This notice solicits names to fill the five vacancies as of December 16, 1995.

Any interested person or organization may nominate qualified individuals for membership. Nominees should be identified by name, occupation, position, address and telephone number. Nominations must include a current resume providing the nominee's background, experience, and qualifications.

Persons selected for membership will receive compensation for travel and a nominal daily compensation while attending meetings.

Nominations should be submitted to Charlene E. Shaw, Designated Federal Officer, National Drinking Water Advisory Council, U.S. Environmental Protection Agency, Office of Ground Water and Drinking Water (4601), 401 M Street SW, Washington, D.C. 20460, no later than 30 days after publication of this notice in the Federal Register. The agency will not formally acknowledge or respond to nominations.

Dated: October 26, 1995.

Cynthia C. Dougherty,

Director, Office of Ground Water and Drinking Water.

[FR Doc. 95–27066 Filed 10–31–95; 8:45 am]

BILLING CODE 6560–50–M

[FRL–5321–8]

Notice of Disclosure of Confidential Business Information Obtained Under the Comprehensive Environmental Response, Compensation and Liability Act to EPA Authorized Representative Department of Toxic Substances Control, California Environmental Protection Agency

AGENCY: Environmental Protection Agency.

ACTION: Notice; Request for Comment.

SUMMARY: EPA hereby complies with the requirements of 40 CFR 2.310(h)(3) for notice of disclosure to its authorized representative, the Department of Toxic Substances Control (''DTSC''), California Environmental Protection Agency, Superfund confidential business information (''CBI'') which has been submitted to EPA Region 9, Hazardous Waste Management Division, Office of Superfund Programs.

DATES: Comments may be submitted until November 13, 1995.

ADDRESSES: Comments should be sent to: Kim Muratore (H–7–4), Environmental Protection Agency, Region 9, 75 Hawthorne Street, San Francisco, CA 94105.

FOR FURTHER INFORMATION CONTACT: Kim Muratore, Office of Superfund Programs, Environmental Protection Agency, Region 9, 75 Hawthorne Street, San Francisco, CA 94105, (415) 744–2373.

NOTICE OF REQUIRED DETERMINATIONS, PROVISIONS, AND OPPORTUNITY TO COMMENT: The Comprehensive Environmental Response, Compensation, and Liability Act of 1980 [''CERCLA''], as amended, (commonly known as ''Superfund'') requires the establishment of an administrative record upon which the President shall base the selection of a response action. CERCLA also requires the maintenance of many other records including those relevant to cost recovery. EPA has granted authorized representative status to the State of California Department of Toxic Substances Control, California Environmental Protection Agency. Pursuant to 40 CFR 2.310(h)(3), a state or local governmental agency which has duties or responsibilities under CERCLA or its regulations may be considered an authorized representative of the United States for purposes of disclosure of confidential information and may be furnished such information upon written request if:

(i) The agency has first furnished to the EPA office having custody of the information a written opinion from the agency's chief legal officer or counsel stating that under applicable state or local law the agency has the authority to compel a business which possesses such information to disclose it to the agency, or

(ii) Each affected business is informed of those disclosures under this paragraph (h)(3) which pertain to it, and the agency has shown to the satisfaction of an EPA legal office that the agency's use and disclosure of such information will be governed by state or local law and procedures which will provide adequate protection to the interests of affected businesses.

Pursuant to 40 CFR 2.310(h)(4), at the time any information is released to a state or local government pursuant to paragraph 2.310(h), EPA must notify the state or local government that the information may be entitled to confidential treatment and that any knowing and willful disclosure of the information may subject the state or local government and its employees to penalties in section 104(e)(2)(B) of CERCLA.

EPA has determined that DTSC has satisfied the requirements of subparagraph 40 CFR 2.310(h)(3)(ii) that the agency demonstrate to the satisfaction of EPA that the agency's use and disclosure of such information will be governed by state or local law and procedures which will provide adequate protection to the interests of affected businesses.

EPA hereby advises affected parties that they are informed of potential disclosures to DTSC under paragraph (h)(3), and that they have ten working days to comment pursuant to 40 CFR 2.301 (h)(2)(iii), incorporated by reference into 40 CFR 2.310 (h)(2). Comments should be sent to: Environmental Protection Agency, Region 9, Kim Muratore (H–7–4), 75 Hawthorne Street, San Francisco, CA 94105.

Dated: October 19, 1995.

Keith Takata,

Deputy Director for Superfund Hazardous Waste Management Division, EPA, Region 9.

[FR Doc. 95–27071 Filed 10–31–95; 8:45 am]

BILLING CODE 6560–50–P

[FRL–5322–9]

Regulatory Reinvention (XL) Pilot Projects: XL Community Pilot Program

AGENCY: Environmental Protection Agency (EPA).

ACTION: Solicitation of proposals and request for Comment.

SUMMARY: Today, EPA is announcing the XL Community Pilot Program to demonstrate community-designed and directed strategies for achieving greater environmental quality consistent with community economic goals. In partnership with states, local governments, communities, tribal governments, and other local entities (either public or private), EPA will provide an opportunity to test flexible and innovative strategies in the implementation of environmental regulatory requirements in exchange for a commitment to achieve greater environmental quality than would have been realized under traditional approaches.

This document responds to one of President Clinton's March 16, 1995 initiatives listed in the report, Reinventing Environmental Regulation. In that report, the President stated that EPA would implement four pilot programs to give a limited number of regulated entities and communities an opportunity to demonstrate eXcellence and Leadership (XL) in environmental protection. An earlier Federal Register Notice, published on May 23, 1995 (60 FR 27282), discusses the XL pilot programs for facilities, industry sectors, and government agencies. This Federal Register Notice addresses the XL Community Pilot Program and is a solicitation for comments and an invitation for proposals from public and private entities interested in initiating XL community pilot projects. The XL Community Pilot Program is not a grant program and is limited to alternative and innovative strategies for increased environmental protection. EPA has set a goal of implementing a total of fifty projects in the four program areas.

In the section on ''Alternative strategies for communities'' in the President's March 16, 1995 report, the President stated that the Agency would undertake an additional program for communities unable to meet existing requirements. For more information on this program, see the section below on other community-based reinvention efforts.

DATES: The period for submission of proposals will begin on November 1, 1995 pursuant to the Information Collection Request (ICR No. 1755.2) approved by the Office of Management and Budget (OMB Approval No. 2010–0026) under the Paperwork Reduction Act. This will be an open solicitation with no set end date. Project sponsors wishing to be considered for these pilots should submit proposals in response to this Federal Register Notice. EPA will take proposals on a rolling basis for selection of a limited number of pilots. Prior to the end of 1995, EPA plans to

invite a small number of project proponents to begin development of Final Project Agreements. The period for comment on all aspects of the program will begin with publication of this Notice and extend for thirty days.

SUBMISSION OF COMMENTS AND PROJECT PROPOSALS: Project proposals and all comments on the pilot program should be sent to: Regulatory Reinvention Pilot Projects: XL Community Pilot Program, FRL–5322–9; Water Docket, Mail Code 4101; U.S. Environmental Protection Agency; 401 M Street, S.W.; Washington, D.C., 20460. This docket accepts no faxes. Project proposals should include a one-page cover sheet that summarizes: the environmental problems that the project addresses; a brief description of the project identifying the regulatory flexibility being requested; and the project's anticipated results. Cover sheets should also include the applicants' names, addresses, and phone numbers. Project proposal narratives should explain the relationship of the proposal to the first nine criteria for project selection described in this Notice. In their proposals applicants should also identify any current initiatives in the project area upon which the proposed project could build. An original and three copies should be submitted to the Docket. Proponents of projects are invited, but by no means required, to submit other useful materials in paper, audio/visual, or electronic formats.

Documents referenced in this Federal Register Notice are available for review at EPA's Water Docket; 401 M Street, S.W., Washington, D.C. For access to the Docket materials, call 202–260–3027 between 9 a.m. and 3:30 p.m. for an appointment.

FOR FURTHER INFORMATION CONTACT: The XL Community Pilot Program at 703–934–3241.

Description of the Program

Through the XL Community Pilot Program, EPA will respond to requests for regulatory flexibility to support local communities' efforts to create innovative, alternative environmental management strategies that are supportive of community economic goals. To this end, EPA is inviting proposals from local entities capable of demonstrating alternative approaches for achieving greater environmental results than would have been obtained under existing approaches to environmental protection. Ideally, XL community pilot projects should be consistent with and help to establish long-range community environmental goals and bring together groups such as facilities, community organizations, and governments at all levels to achieve the goals of greater environmental quality consistent with economic development. As such, proposals that demonstrate the greatest support from community stakeholders and are consistent with a broader community vision or plan will be given preference in the selection process.

Proposals are invited from a range of community entities and should be designed around a defined geographic area. Community entities include, but are not limited to, local governments, tribal governments, regional area consortia/governments, councils of government, private non-profit citizen/neighborhood/community organizations, non-profit educational institutions, Empowerment Zones and Enterprise Communities designated under the Administration's Community Empowerment Initiative, and other local entities either public or private.

Geographic areas could include: Urban and rural areas; political jurisdictions; tribal lands; and ecologically-defined areas such as watersheds and ecosystems, among others. EPA encourages community groups within the same geographic area whose project objectives are similar to consolidate their proposals.

In many cases states, federally-recognized tribal agencies, or other agencies, are responsible for administering environmental regulations. Therefore, to be designated an XL Community, a project must have the support and approval of the agency that has regulatory responsibility within the scope of the project. In addition, where possible, state or tribal environmental agencies will be the lead agency working with communities to implement the XL Program. Accordingly, support for the project by the responsible agency should be obtained as the applicant, assisted by EPA if necessary, develops the final project agreement.

Selection Process

EPA will screen proposals submitted in response to this notice (considering the criteria listed below) to select those that do the most to advance the purposes of this program, and will then work cooperatively with a subset of the applicants to further refine proposals, as necessary. The Agency retains the ultimate authority to select projects based on a qualitative consideration of these criteria. Given the pilot nature of the program, and the limited number of projects that will be selected, proposals that satisfy many or all of the criteria may not be selected if, in the Agency's judgment, other proposed projects better serve the objectives of the program. Moreover, no person is required to submit a proposal or obtain approval as a condition of commencing or continuing a regulated activity. Accordingly, there will be no formal administrative review available for proposals that are not selected, nor does EPA believe there will be a right to judicial review. Although EPA will work with the most promising applicants, the ultimate responsibility for developing detailed project plans will be with the project proponents. Proposals not chosen may be referred for additional review to other EPA programs which have other community-based activities underway or may be deferred for development at a later time.

Final Project Agreements

After a second review a final group of selected project proponents will be invited to join EPA, state, or tribal environmental agencies, and other co-regulators to develop a Final Project Agreement. Only the signing of a Final Project Agreement will constitute the acceptance of a full-fledged pilot project. Parties to the Final Project Agreement will include at least EPA, project participants, state or tribal environmental agencies, as well as other co-regulators. These agreements will deal with project-specific issues such as legal authority for project implementation, resource commitments to the project, and provision for regulatory flexibility and technical or other support if requested, public involvement, specific time commitments to environmental progress, and expected environmental results. Each Final Project Agreement will clearly set forth requirements that the project participants have agreed to meet including measurable performance objectives and should include an explicit statement concerning what data and analyses are needed to evaluate project results. To address regulatory flexibility, EPA anticipates that the Agreements will be structured so that any enforcement relief EPA has provided with respect to applicable requirements will be conditioned on the project participants' compliance with the terms of the Agreements. EPA invites project proponents to include in their proposals suggestions for additional or alternative approaches to enforcing the commitments made in the Final Project Agreements. Unless otherwise agreed to by both EPA and the proponent, the time to negotiate and sign a Final Project Agreement should be limited to six months from the date of initial project acceptance. The final

phase of the program involves implementation, monitoring and evaluation of the agreement terms.

Project Selection Criteria

EPA will consider the following criteria in evaluating pilot project proposals:

I. Environmental Results

Projects should demonstrate, within a defined geographic area, environmental results that are superior to what would be achieved under existing and reasonably foreseeable future national regulations. Project proponents should explain in clear and common sense terms how the environmental results from the alternative strategy for their specific project will be better than present routine compliance. Although EPA is open to a qualitative demonstration of results, project proponents are encouraged to provide, where possible, a quantitative comparison between anticipated environmental results under current requirements and projected results under the proposed alternative approach. Improved environmental quality can be achieved either directly through the environmental activities of the project or through cost savings resulting from the project which are invested in follow-up activities that produce greater environmental results. The XL Community Pilot Program is not an opportunity to propose exchanges of regulatory flexibility for non-environmental benefits or to seek waivers or reductions from national environmental goals. The Final Project Agreement should include explicit goals, benchmarks, and requirements, including measurable performance objectives. For example, a variety of environmental measures may be used—from waste stream sampling and ambient air quality monitoring to rougher measures such as acres of habitat preserved, greater bio-diversity, and/or more open space created—depending on the project.

II. Stakeholder Involvement, Support, and Capacity for Community Participation

EPA encourages proposals for projects that will build, support, and promote cooperation among citizens, businesses, government, and non-profit organizations at the community level for the purposes of formulating effective environmental strategies and economic sustainability. Project proposals that incorporate processes for building and supporting a framework for community participation will be given greater consideration. Project proposals should at a minimum identify key stakeholders for the project, drawn from affected sectors of the community. Depending on the nature of the project, stakeholders will likely include one or more of the following: Local government agencies; members of environmental and other public interest groups; businesses in the community; community development corporations; citizens or officials from communities near or adjacent to the project; or other affected people or entities. Where available, project proposals should present evidence of support from key stakeholders including partnerships with individuals, community groups, and regulated entities.

III. Economic Opportunity

Pilots which demonstrate ways of creating economic opportunity through, or in conjunction with, improved environmental quality are encouraged. For example, recent experience with restoration of greenways to reduce runoff to waterways has led to revitalization and development of commercial and recreational waterfront activities and created new industries providing the community with jobs and resources.

IV. Feasibility

Project proponents should demonstrate the technical, administrative, and financial capability to implement project proposals.

V. Transferability

EPA will favor project proposals that demonstrate potential to serve as models for EPA, states, tribes, local governments, regional entities, and other communities nationwide.

VI. Monitoring, Reporting and Evaluation

Projects should have clear environmental objectives that will be measurable in order to allow EPA and the public to evaluate the success of the project. The project proposal should clearly identify the entity which will be accountable for project results. The project sponsor should state the time frame within which results will be achieved, and propose interim dates and the means by which progress could be measured, evaluated and shared with stakeholders.

VII. Equitable Distribution of Environmental Risks

The project should not subject anyone to unjust or disproportionate environmental degradation. Implementation of project proposals should not significantly transfer pollution to, or add to environmental degradation of, a jurisdiction outside of a project area. Additionally, project proposals that lessen the burden of environmental degradation to people and places that have traditionally shouldered a disproportionate share of the burden will be given greater consideration.

VIII. Community Planning

EPA encourages proposals for projects that use participatory community planning and consensus-based goals to build constituencies and marshall resources for community improvement. Projects which facilitate the creation of community plans and/or promote the use of existing community goals and plans are encouraged. Projects should be consistent with any existing community plans or goals.

IX. Innovative Approaches/Multi-Media Focus/Pollution Prevention

EPA is looking for projects that test innovative strategies for achieving environmental results. These strategies may include innovative community planning or a process for articulating a community vision, new facility technologies, or environmental management practices such as source water protection. EPA also encourages project proposals that test alternatives to current, single-media environmental management programs (i.e., improvements in more than one environmental medium). EPA has a preference for protecting the environment by preventing the generation of pollution rather than by controlling pollution once it has been created.

X. Enforcement and Compliance History

Although applicants are not requested to address this criterion in their proposals, EPA will consider the enforcement and compliance history of regulated entities that are proposed to be subject to final project agreements. A perfect compliance history is not a prerequisite to participation in the XL Community Pilot Program. At the same time, this program is designed to demonstrate excellence and leadership by providing regulatory flexibility to entities that are committed to achieving superior environmental performance. In addition, regulatory flexibility may mean that regulated entities are subject to less oversight, or alternative kinds of oversight, as compared with existing schemes. Accordingly, as part of the selection process, EPA will consider the entities' prior compliance history.

Relationship of XL Community Pilots to Other Community-Based Reinvention Efforts

EPA is undertaking several other community-based initiatives as part of its regulatory reinvention efforts. Under the Compliance Incentives for Small Communities Initiative EPA intends to issue a small community enforcement flexibility policy later this year. This policy will provide guidance to states and tribes that want to offer compliance flexibility to small local governments that, unlike XL communities, are struggling to meet existing requirements, and that employ a rational process for setting priorities based on local conditions and needs (for information on the Flexibility Policy contact Kenneth Harmon; Office of Enforcement and Compliance Assurance; 202–564–7049).

In several instances, states, with varying degrees of EPA involvement, have negotiated or are in the process of negotiating compliance flexibility with small communities that seek to achieve and/or maintain compliance with existing environmental requirements. These programs exist in Oregon (Environmental Partnerships for Oregon Communities), Idaho (Idaho Small Community Mandates Pilot Project) and Nebraska (Nebraska Mandate Initiative). For more information on these programs contact the individual state environmental agencies.

A second EPA community-based initiative, the Community-Based Risk Assessment project, is designed to promote risk-based decision making in communities, States, and tribes and to provide communities with a better understanding of human health and ecological risks. In this project, EPA will work with communities to identify available risk tools that meet specific community needs. EPA will initially focus on the provision of risk assessment and comparative risk software, databases, training courses, and information materials, but is also interested in providing more focused technical assistance in a few pilot communities. EPA believes that risk assessment and comparative risk are important tools to help communities develop goals, determine priorities, and demonstrate results. For more information about this project contact Jane Metcalfe; Office of Research and Development; 202–260–7669.

A third reinvention initiative, the Sustainable Development Challenge Grant Program will be announced in a Federal Register Notice later this year. For information on the Sustainable Development Challenge Grant Program contact the Office of Regional Operations and State and Local Relations; 202–260–4719.

Legal Mechanisms for Pilot Projects

EPA will seek to use a variety of administrative and compliance mechanisms to provide regulatory flexibility where necessary for final project agreements. Regulatory flexibility will be conditioned on the pilot project meeting the alternative requirements specified in the project plan. In particular circumstances, EPA may consider changes in underlying regulations or may seek changes in underlying statutes. EPA recognizes that these questions raise issues of importance both to the Government and to potential participants in pilot projects that seek regulatory flexibility. Applicants are invited to present EPA with proposed approaches tailored to provide the flexibility for their pilot projects.

Request for Comment on Pilot Program

Interested members of the public are invited to comment on all aspects of the pilot project program. EPA requests specific comment on the legal mechanisms for implementing project agreements, and the data requirements for determining both existing environmental conditions and the level of environmental quality that would result from selected projects.

Paperwork Reduction Act

The information collection provisions in this Notice, for solicitation of proposals, have been approved by the Office of Management and Budget (OMB) under the *Paperwork Reduction Act*, 44 U.S.C. 3501 *et seq.* (ICR No. 1755.2 and OMB Approval No. 2010–0026). Copies of the ICR (ICR No. 1755.2) may be obtained from Sandy Farmer; U.S. Environmental Protection Agency; Information Policy Branch, Mail Code 2136; 401 M Street, S.W.; Washington, D.C. 20460; or by calling (202) 260–2740. Public reporting burden for this collection of information is estimated to total 133,800 hours annually for all respondents combined, and an additional 27,760 hours annually for all co-regulators combined. These estimates cover all information burdens associated with Project XL including application, selection, development of Final Project Agreement, tracking of project progress, determination of bottom-line environmental results, evaluation of project outcome, and all information required by Project XL for these activities.

Dated: October 26, 1995.

Fred Hansen,

Deputy Administrator.

[FR Doc. 95–27141 Filed 10–31–95; 8:45 am]

BILLING CODE 6560–50–P

[FRL–5324–2]

Meetings of the Grand Canyon Visibility Transport Commission

AGENCY: Environmental Protection Agency (EPA).

ACTION: Notice of meetings.

SUMMARY: The United States Environmental Protection Agency (USEPA) is announcing a meeting of the Grand Canyon Visibility Transport Commission (Commission) and meetings of its Communications Committee, Operations Committee, and Public Advisory Committee.

The Commission will meet from 10:00 AM to 12:00 NOON on Wednesday, November 15, 1995, at the Fountain Suites Hotel, 2577 West Greenway Road, Phoenix, Arizona. Agenda items will include a presentation of Options for Western Vistas, the draft evaluation of the Commission's emissions management scenarios, a report from the Operations Committee on adequacy of the Commission's organizational structure and the completeness of its analytical approach, and an election of Commission officers.

The Operations Committee will meet in conjunction with the Commissioners' meeting from 8:30 AM to 9:30 AM, and from 1:00 PM to 5:30 PM on Wednesday, November 15, 1995, at the Fountain Suites Hotel, 2577 West Greenway Road, Phoenix, Arizona. During the morning meeting the Committee will prepare for the Commissioners' meeting, and during the afternoon it will plan implementation of Commission actions.

The Communications Committee will meet from 10:00 AM to 8:00 PM on Tuesday, November 14, 1995 at the Fountain Suites Hotel, 2577 West Greenway Road, Phoenix, Arizona. The agenda will include facilitator training for the public meetings being held by the Commission in late November and early December 1995.

The Public Advisory Committee will meet from 8:30 AM on Thursday, November 16 to 5:00 PM on Friday, November 17 at the Fountain Suites Hotel, 2577 West Greenway Road, Phoenix, Arizona. The meeting will include a review of *Options for Western Vistas*, the draft evaluation of the Commission's emissions management scenarios, and preparations for the

public meetings being held by the Commission in late November and early December 1995.

The Commission was established by the EPA on November 13, 1991 (see 56 FR 57522, November 12, 1991). All meetings are open to the public. These meetings are not subject to provisions of the Federal Advisory Committee Act, Public Law 92–463, as amended.

FOR FURTHER INFORMATION CONTACT: Mr. John T. Leary, Project Manager for the Grand Canyon Visibility Transport Commission, Western Governor's Association, 600 17th Street, Suite 1705, South Tower, Denver, Colorado 80202; telephone number (303) 623–9378; facsimile machine number (303) 534–7309.

Dated: October 22, 1995.

Felicia Marcus,

Regional Administrator, U.S. Environmental Protection Agency, Region 9.

[FR Doc. 95–27143 Filed 10–31–95; 8:45 am]

BILLING CODE 6560–50–P

[FRL–5323–1]

Science Advisory Board; Drinking Water Committee; Notification of Public Advisory Committee Meeting

Pursuant to the Federal Advisory Committee Act, Public Law 92–463, notice is hereby given that the Drinking Water Committee (DWC) of the Science Advisory Board (SAB) will hold a teleconference meeting on Thursday, November 9, 1995 from 2:30 to 4:30 pm eastern time. This teleconference is open to the public. For further information concerning the teleconference, please contact the individuals listed below. Documents that are the subject of SAB reviews are normally available from the originating EPA office and are *not* available from the SAB Office.

The purpose of the Teleconference is to conduct a preliminary discussion of the Committee's review of the Environmental Protection Agency's Draft *Research Plan for Microbial Pathogens and Disinfection By-Products in Drinking Water.* During the teleconference there will be an overview of the Draft Research Plan presented by Agency staff, with opportunities for Committee Members to ask clarification questions and to discuss the charge for the review. The Committee will formally review the Draft Research Plan in a public meeting on January 9–10, 1996.

The draft charge to the Drinking Water Committee is as follows: (a) Has EPA identified the correct research issues to be addressed to support the development of the Interim and long term Enhanced Surface Water Treatment Rules, Ground Water Disinfection Rule and Stage 2 Disinfectants/Disinfectant Byproducts rule? (b) Do the research topic areas or projects underway or envisioned under the five year plan appear to adequately address the issues? Should any other research topic area be funded in lieu or in addition to those presented? (c) Has EPA assigned appropriate priorities to the research?

Single copies of the Draft Research Plan are available by calling Ms. Gail Robarge, U.S. Environmental Protection Agency, Office of Research and Development, 401 M Street, S.W., Washington, D.C. 20460; Telephone: (202) 260–9101.

Any member of the public wishing to register for the teleconference should contact Mrs. Mary Winston, Staff Secretary, Drinking Water Committee, Science Advisory Board (1400F), U.S. EPA, Washington, DC 20460, telephone (202) 260–6552 or fax (202) 260–7118. Procedures for connecting to the teleconference will be released to the registrants prior to the meeting. It is expected that a room will be available at the US EPA Headquarters Building, 401 M Street, SW, Washington, DC for those who wish to attend an SAB link to the teleconference. Members of the public desiring additional information about the meeting should contact Mr. Robert Flaak, Designated Federal Official, Drinking Water Committee, Science Advisory Board (1400F), US EPA, 401 M Street, SW, Washington, DC 20460, by telephone at (202) 260–5133, fax at (202) 260–7118, or via The INTERNET at: Flaak.Robert@EPAMAIL.EPA.GOV.

The Committee expects to review the Draft Research Plan in a face-to-face public session on January 9–10, 1996. That meeting will be announced in a subsequent Federal Register Notice. Public comments will not be taken during the November 9, 1995 teleconference, however, they will be taken during the January meeting. Please contact Mr. Flaak for further details.

Dated: October 20, 1995.

A. Robert Flaak,

Acting Staff Director, Science Advisory Board.

[FR Doc. 95–27067 Filed 10–31–95; 8:45 am]

BILLING CODE 6560–50–M

[FRL–5322–8]

Open Forum on Whole Effluent Toxicity Workshop

During September 1995, the Society of Environmental Toxicology and Chemistry (SETAC) sponsored a Workshop on Whole-Effluent Toxicity (WET) at the University of Michigan Biological Station near Pellston, Michigan. Funding for the Workshop was provided by the American Industrial Health Council, the Association of Metropolitan Sewerage Agencies, and the U.S. Environmental Protection Agency (EPA), and the workshop was administered by the SETAC Foundation for Environmental Education. EPA's WET program uses WET testing to help ensure protection of the Nation's waters. WET testing is viewed as one of the most direct ways to ensure adherence to the ''narrative criterion'' that states that ''no toxics in toxic amounts'' shall be discharged. Workshop results should give valuable insight into the strengths and weaknesses of technical aspects of WET testing. The Workshop was attended by 45 nationally recognized scientists from government, academia, and business who were invited to participate based on their expertise and experience in the WET program. The primary topic areas addressed during the Workshop included (1) Laboratory Test Methods/ Appropriate Endpoints, (2) Effluent Toxicity Testing Variability, (3) Field Assessments (in relation to aquatic responses to effluents), and (4) Predicting Receiving System Impacts From Whole Effluent Toxicity Tests. Activities began with discussion-initiation presentations on the four topic areas. Group breakout sessions were then held to examine in depth the issues introduced in the discussion sessions, to reach a consensus on the state of the science in each of these topic areas, and to agree upon issues in the WET program that require further consideration or investigation. Written proceedings were drafted by the workgroups, and those proceedings are in the process of being reviewed and edited prior to being published by SETAC Press.

On Tuesday, December 5, 1995, from 8:30 a.m. until 6:00 p.m. at the Crystal City Marriott (near the Washington National Airport), SETAC will hold an Open Forum to report the results of the Pellston WET Workshop. The primary purpose of the Forum is to provide attendees (1) an overview of key technical issues and conclusions from the Workshop; (2) the opportunity for Forum attendees to make brief information statements regarding their perspectives on technical issues discussed at the Workshop; and (3) the opportunity for a dialogue between Forum attendees and Workshop participants.

In order to plan for adequate seating and to order refreshments, attendees must communicate their plans to attend the Open Forum by November 21, 1995. Mail, fax, or E-mail your name and affiliation to: SETAC–WET Open Forum, 1010 North 12th Avenue, Pensacola, FL 32501–3370; the fax number is (904) 469–9778; and the E-mail address is setac@setac.org.

Greg Schiefer, Assistant Executive Director, Society of Environmental Toxicology and Chemistry, 1010 North 12th Avenue, Pensacola, Florida 32501–3370, USA, TEL 904–469–1500, FAX 904–469–9778, e-mail schiefer@setac.org.

Dated: October 26, 1995.

Donna K. Reed,

Workshop Trichair.

[FR Doc. 95–27072 Filed 10–31–95; 8:45 am]

BILLING CODE 6560–50–P

[OPP–30394; FRL–4979–7]

Certain Companies; Applications to Register Pesticide Products

AGENCY: Environmental Protection Agency (EPA).

ACTION: Notice.

SUMMARY: This notice announces receipt of applications to register pesticide products containing new active ingredients not included in any previously registered products and four Transgenic Plant Pesticides pursuant to the provisions of section 3(c)(4) of the Federal Insecticide, Fungicide, and Rodenticide Act (FIFRA), as amended.

DATES: Written comments must be submitted by December 1, 1995.

ADDRESSES: By mail, submit written comments identified by the document control number [OPP–30394] and the file symbols to: Public Response and Program Resources Branch, Field Operations Divisions (7506C), Office of Pesticide Programs, Environmental Protection Agency, 401 M St., SW., Washington, DC 20460. In person, bring comments to: Environmental Protection Agency, Rm. 1132, CM #2, 1921 Jefferson Davis Hwy., Arlington, VA.

Comments and data may also be submitted electronically by sending electronic mail (e-mail) to: opp-docket@epamail.epa.gov. Electronic comments must be submitted as an ASCII file avoiding the use of special characters and any form of encryption. Comments and data will be accepted on disks in Wordperfect in 5.1 file format or ASCII file format. All comments and data in electronic form must be identified by the docket number [OPP–30394]. No ''Confidential Business Information'' (CBI) should be submitted through e-mail. Electronic comments on this notice may be filed online at many Federal Depository Libraries. Additional information on electronic submission can be found below in this document.

Information submitted as a comment concerning this notice may be claimed confidential by marking any part or all of that information as ''Confidential Business Information'' (CBI). Information so marked will not be disclosed except in accordance with procedures set forth in 40 CFR part 2. A copy of the comment that does not contain CBI must be submitted for inclusion in the public record. Information not marked confidential may be disclosed publicly by EPA without prior notice. All written comments will be available for public inspection in Rm. 1132 at the address given above, from 8 a.m. to 4:30 p.m., Monday through Friday, excluding holidays.

FOR FURTHER INFORMATION CONTACT: By mail: Michael Mendelsohn, Biopesticides and Pollution Prevention Division (7501W), Office of Pesticide Programs, Environmental Protection Agency, 401 M St., SW., Washington, DC 20460. Office location and telephone number: Rm. CS51B6, Westfield Building North Tower, 2800 Crystal Drive, Arlington, VA 22202, (703–308–8715); e-mail: mendelsohn.mike@epamail.epa.gov.

SUPPLEMENTARY INFORMATION: EPA received an applications as follows to register pesticide products containing active ingredients not included in any previously registered products and Transgenic Plant Pesticides pursuant to the provisions of section 3(c)(4) of FIFRA. Notice of receipt of these applications does not imply a decision by the Agency on the applications.

Products Containing Active Ingredients Not Included In Any Previously Registered Products

1. File Symbol: 100–TTA. Applicant: Ciba-Geigy Corporation, Ciba Crop Protection, Greensboro NC 27419. Product name: Able Biological Insecticide. Insecticide. Active ingredient: *Bacillus thuringiensis* var. *kurstaki* strain M-200 at 6.0 percent. Proposed classification/Use: None. For the control of lepidopterous insect pests of tree fruits, small fruits, vegetables, tree nuts, alfalfa, corn, cotton, and soybeans.

2. File Symbol: 100–TTL. Applicant: Ciba-Geigy Corp. Product name: Technical CGA -269941. Insecticide. Active ingredient: *Bacillus thuringiensis* var. *kurstaki* strain M-200 at 12.0 percent. Proposed classification/Use: None. For formulation into end-use products for control of lepidopterous insect pests of tree fruits, small fruits, vegetables, tree nuts, herbs and spices as well as alfalfa, corn, peanuts, cotton, and soybeans.

3. File Symbol: 524–UIA. Applicant: Monsanto Company, 700 Chesterfield Parkway North, St. Louis, MO 63198. Product name: *Bacillus thuringiensis* subsp. *kurstaki* Insect Control Protein (CryIA(b)). Active ingredient: *Bacillus thuringiensis* subsp. *kurstaki* delta-endotoxin as produced in corn by a cryIA(b) gene and its controlling sequences. Proposed classification/Use: None. For full commercial use and seed propagation.

4. File Symbol: 524–UIO. Applicant: Monsanto Co. Product name: *Bacillus thuringiensis* subsp. *kurstaki* (B.t.k.) Insect Control Protein. Active ingredient: *Bacillus thuringiensis* subsp. *kurstaki* delta-endotoxin as produced in corn by a cryIA(b) gene and its controlling sequences. Proposed classification/Use: None. For full commercial use and seed propagation.

5. File Symbol:67979–R. Applicant: Northrup King Company, 7500 Olson Memorial Highway, Golden Valley MN 55427. Product name: Northrup King Insect Resistant Corn. Active ingredient: *Bacillus thuringiensis* subsp. *kurstaki* delta-endotoxin as produced in corn by a cryIA(b) gene and its controlling sequences. Proposed classification/Use: None. For seed propagation.

6. File Symbol: 67979–E. Applicant: Northrup King Co. Product name: Northrup King Insect Resistant Corn II. Active ingredient: *Bacillus thuringiensis* subsp. *kurstaki* delta-endotoxin as produced in corn by a cryIA(b) gene and its controlling sequences. Proposed classification/Use: None. For full commercial use and seed propagation.

Notice of approval or denial of an application to register a pesticide product will be announced in the Federal Register. The procedure for requesting data will be given in the Federal Register if an application is approved.

Comments received within the specified time period will be considered before a final decision is made; comments received after the time specified will be considered only to the extent possible without delaying processing of the application.

A record has been established for this notice under docket number [OPP–30394] (including comments and data submitted electronically as described below). A public version of this record, including printed, paper versions of

electronic comments, which does not include any information claimed as CBI, is available for inspection from 8 a.m. to 4:30 p.m., Monday through Friday, excluding legal holidays. The public record is located in Rm. 1132 of the Public Response and Program Resources Branch, Field Operations Division (7506C), Office of Pesticide Programs, Environmental Protection Agency, Crystal Mall #2, 1921 Jefferson Davis Highway, Arlington, VA.

Electronic comments can be sent directly to EPA at:

opp-docket@epamail.epa.gov

Electronic comments must be submitted as an ASCII file avoiding the use of special characters and any form of encryption.

The official record for this notice, as well as the public version, as described above will be kept in paper form. Accordingly, EPA will transfer all comments received electronically into printed, paper form as they are received and will place the paper copies in the official record which will also include all comments submitted directly in writing. The official record is the paper record maintained at the address in ''ADDRESSES'' at the beginning of this document.

Written comments filed pursuant to this notice, will be available in the Public Response and Program Resources Branch, Field Operations Division at the address provided from 8 a.m. to 4:30 p.m., Monday through Friday, excluding legal holidays. It is suggested that persons interested in reviewing the application file, telephone this office at (703–305–5805), to ensure that the file is available on the date of intended visit.

Authority: 7 U.S.C. 136.

List of Subjects

Environmental protection, Pesticides and pests, Product registration.

Dated: October 17, 1995.

Flora Chow,

Acting Director, Biopesticides and Pollution Prevention Division, Office of Pesticide Programs.

[FR Doc. 95–26857 Filed 10–31–95; 8:45 am]

BILLING CODE 6560–50–F

[OPP–30377B; FRL–4980–6]

Certain Companies; Approval of Pesticide Product Registrations

AGENCY: Environmental Protection Agency (EPA).

ACTION: Notice.

SUMMARY: This notice announces Agency approval of applications submitted by Ciba-Geigy Corporation (Ciba Seeds) and Mycogen Plant Sciences to register two transgenic plant pesticide products containing active ingredients not included in any previously registered products pursuant to the provisions of section 3(c)(5) of the Federal Insecticide, Fungicide, and Rodenticide Act (FIFRA), as amended.

FOR FURTHER INFORMATION CONTACT: By mail: Michael Mendelsohn, Biopesticides and Pollution Prevention Division (7501W), Office of Pesticide Programs, Environmental Protection Agency, 401 M St., SW., Washington, DC 20460. Office location and telephone number: Rm. CS51B6, Westfield Building North Tower, 2800 Crystal Drive, Arlington, VA 22202, (703) 308–8715; e-mail: mendelsohn.mike@epamail.epa.gov.

SUPPLEMENTARY INFORMATION: EPA issued a notice, published in the Federal Register of January 13, 1995 (60 FR 3209), which announced that Ciba-Geigy Corporation (Ciba-Seeds), 3054 Cornwallis Road, P.O. Box 12257, Research Triangle Park, NC, 27709 and Mycogen Plant Sciences, 4980 Carroll Canyon Road, San Diego, CA 92121, had submitted applications to register the transgenic plant pesticides B.t.k. CryIA(b) Insect Control Protein as Produced in Corn and B.t.k. CryIA(b) Insect Control Protein as Produced in Corn (EPA File Symbols 66736–R and 68467–R), containing the active ingredient *Bacillus thuringiensis* delta-endotoxin as produced in corn by a cryIA(b) gene and its controlling sequences as found on plasmid vector pCIB4431,0.0001-0.0018 percent total plant protein respectively, an active ingredient not included in any previously registered products.

The applications were approved on March 21, 1995, for seed stock and hybrid seed production only (EPA Registration Numbers 66736–1 and 68467–1)

The Agency has considered all required data on risks associated with the proposed use of *Bacillus thuringiensis* delta-endotoxin as produced in corn by a cryIA(b) gene and its controlling sequences as found on plasmid vector pCIB4431, and information on social, economic, and environmental benefits to be derived from use. Specifically, the Agency has considered the nature of the chemical and its pattern of use, application methods and rates, and level and extent of potential exposure. Based on these reviews, the Agency was able to make basic health safety determinations which show that use of *Bacillus thuringiensis* delta-endotoxin as produced in corn by a cryIA(b) gene and its controlling sequences as found on plasmid vector pCIB4431 when used in accordance with the limitations of these registrations, will not generally cause unreasonable adverse effects to the environment.

More detailed information on these registrations is contained in a Pesticide Fact Sheet on *Bacillus thuringiensis* delta-endotoxin as produced in corn by a cryIA(b) gene and its controlling sequences as found on plasmid vector pCIB4431.

A copy of this fact sheet, which provides a summary description of the chemical, use patterns and formulations, science findings, and the Agency's regulatory position and rationale, may be obtained from the National Technical Information Service (NTIS), 5285 Port Royal Road, Springfield, VA 22161.

In accordance with section 3(c)(2) of FIFRA, a copy of the approved label and the list of data references used to support registration are available for public inspection in the office of the Product Manager. The data and other scientific information used to support registration, except for material specifically protected by section 10 of FIFRA, are available for public inspection in the Public Response and Program Resources Branch, Field Operations Division (7506C), Office of Pesticide Programs, Environmental Protection Agency, Rm. 1132, CM #2, Arlington, VA 22202 (703–305–5805). Requests for data must be made in accordance with the provisions of the Freedom of Information Act and must be addressed to the Freedom of Information Office (A–101), 401 M St., SW., Washington, D.C. 20460. Such requests should: (1) Identify the product name and registration number and (2) specify the data or information desired.

Authority: 7 U.S.C. 136.

List of Subjects

Environmental protection, Pesticides and pests, Product registration.

Dated: October 19, 1995.

Flora Chow,

Acting Director, Biopesticides Pollution Prevention Division, Office of Pesticide Programs.

[FR Doc. 95–26858 Filed 10–31–95; 8:45 am]

BILLING CODE 6560–50–F

[OPP–34083; FRL 4982–1]

Notice of Receipt of Requests for Amendments to Delete Uses in Certain Pesticide Registrations

AGENCY: Environmental Protection Agency (EPA).

ACTION: Notice.

SUMMARY: In accordance with section 6(f)(1) of the Federal Insecticide, Fungicide and Rodenticide Act (FIFRA), as amended, EPA is issuing a notice of receipt of request for amendment by registrants to delete uses in certain pesticide registrations.

DATES: Unless a request is withdrawn, the Agency will approve these use deletions and the deletions will become effective on [*insert date 90 days after date of publication in the* Federal Register].

FOR FURTHER INFORMATION CONTACT: By mail: James A. Hollins, Office of Pesticide Programs (7502C), Environmental Protection Agency, 401 M St., SW., Washington, DC 20460. Office location for commercial courier delivery and telephone number: Room 216, Crystal Mall #2, 1921 Jefferson Davis Highway, Arlington, VA (703) 305–5761; e-mail: hollins.james@epamail.epa.gov.

SUPPLEMENTARY INFORMATION:

I. Introduction

Section 6(f)(1) of FIFRA, provides that a registrant of a pesticide product may at any time request that any of its pesticide registrations be amended to delete one or more uses. The Act further provides that, before acting on the request, EPA must publish a notice of receipt of any such request in the Federal Register. Thereafter, the Administrator may approve such a request.

II. Intent to Delete Uses

This notice announces receipt by the Agency of applications from registrants to delete uses in the 14 pesticide registrations listed in the following Table 1. These registrations are listed by registration number, product names, active ingredients and the specific uses deleted. Users of these products who desire continued use on crops or sites being deleted should contact the applicable registrant before [*insert date 90 days after date of publication*] to discuss withdrawal of the applications for amendment. This 90–day period will also permit interested members of the public to intercede with registrants prior to the Agency approval of the deletion.

TABLE 1. — REGISTRATIONS WITH REQUESTS FOR AMENDMENTS TO DELETE USES IN CERTAIN PESTICIDE REGISTRATIONS

EPA Reg No.	Product Name	Active Ingredient	Delete From Label
000352–00394	Dupont Lorox DF Herbicide	Linuron	Right-of-way use, sweet corn, sorghum
000352-WA-900017	Dupont Lorox DF Herbicide	Linuron	Sweet corn
000400–00168	Casoron 4G	Dichlobenil	Peaches, nectarines, plums, prunes
000400–00175	Technical Dichlobenil	Dichlobenil	Tile grout
000400–00176	Casoron 85W	Dichlobenil	Tile grout
000400–00178	Casoron 10G	Dichlobenil	Aquatic uses
000432–00553	Pramex Insecticide Emulsifiable Concentrate 13.3%	Permethrin, mixed cis, trans	Indoor uses
001381–00098	Class MCPE Phenoxy Herbicide	MCPA, isooctyl ester	Flax
001381–00104	Class MCPA Phenoxy Herbicide	MCPA, dimethylamine salt	Flax, rice, peas
002935–00440	Nu-Zone 10ME	Imazalil	Use on cotton
005905–00494	Fluometuron 80WP Herbicide	Fluometuron	Sugarcane
009198–00068	1% Dursban Brand Insecticide	Chlorpyrifos	Mosquito larvicide use
042697–00034	Entire Insect Killer Concentrate	Pyrethrins	Fruit & vegetable uses
045385–00022	Chem-Tox Dursban 4E	Chlorpyrifos	Grass grown for seed, fire ant control on potted plants, ornamental plants

The following Table 2 includes the names and addresses of record for all registrants of the products in Table 1, in sequence by EPA company number.

TABLE 2. — REGISTRANTS REQUESTING AMENDMENTS TO DELETE USES IN CERTAIN PESTICIDE REGISTRATIONS

Company No.	Company Name and Address
000352	E.I. duPont de Nemours & Co., Barley Mill Plaza, P.O. Box 80038, Wilmington, DE 19880.
000400	Uniroyal Chemical Co., Inc., 74 Amity Road, Bethany, CT 06524.
000432	AgrEvo Environmental Health, 95 Chestnut Ridge Road, Montvale, NJ 07645.
001381	Cenex/Land O'Lakes Agronomy Co., P.O. Box 98, Shenandoah, IA 51601.
002935	Wilbur-Ellis Co., 191 West Shaw Ave., Suite 107, Fresno, CA 93704.
005905	Helena Chemical Co., 6075 Poplar Ave., Suite 500, Memphis, TN 38119.
009198	The Andersons Management Corp., P.O. Box 119, Maumee, OH 43537.
042697	Safer, Inc., 9959 Valley View Road, Eden Prairie, MN 55344.

TABLE 2. — REGISTRANTS REQUESTING AMENDMENTS TO DELETE USES IN CERTAIN PESTICIDE REGISTRATIONS—Continued

Company No.	Company Name and Address
045385	CTX, Inc., 481 Scotland Road, McHenry, IL 60050. Kansas City, MO 64101.
042697	Safer, Inc., 9959 Valley View Road, Eden Prairie, MN 55344.
045385	CTX, Inc., 481 Scotland Road, McHenry, IL 60050.

III. Existing Stocks Provisions

The Agency has authorized registrants to sell or distribute product under the previously approved labeling for a period of 18 months after approval of the revision, unless other restrictions have been imposed, as in special review actions.

List of Subjects

Environmental protection, Pesticides and pests, Product registrations.

Dated: October 12, 1995.

Frank Sanders,

Director, Program Management and Support Division, Office of Pesticide Programs.

[FR Doc. 95–27064 Filed 10–31–95; 8:45 am]

BILLING CODE 6560–50–F

[OPP–30396; FRL–4986–3]

Lakeshore Enterprises; Applications to Register Pesticide Products

AGENCY: Environmental Protection Agency (EPA).

ACTION: Notice.

SUMMARY: This notice announces receipt of applications to register pesticide products containing a new active not included in any previously registered products pursuant to the provisions of section 3(c)(4) of the Federal Insecticide, Fungicide, and Rodenticide Act (FIFRA), as amended.

DATES: Written comments must be submitted by December 1, 1995.

ADDRESSES: By mail, submit written comments identified by the document control number [OPP–30396] and the file symbols (69090–R and 69090–E) to: Public Response and Program Resources Branch, Field Operations Divisions (7506C), Office of Pesticide Programs, Environmental Protection Agency, 401 M St., SW., Washington, DC 20460. In person, bring comments to: Environmental Protection Agency, Rm. 1132, CM #2, 1921 Jefferson Davis Hwy., Arlington, VA.

Comments and data may also be submitted electronically by sending electronic mail (e-mail) to: opp-docket@epamail.epa.gov. Electronic comments must be submitted as an ASCII file avoiding the use of special characters and any form of encryption. Comments and data will be accepted on disks in Wordperfect in 5.1 file format or ASCII file format. All comments and data in electronic form must be identified by the docket number [OPP–30396]. No ''Confidential Business Information'' (CBI) should be submitted through e-mail. Electronic comments on this notice may be filed online at many Federal Depository Libraries. Additional information on electronic submission can be found below in this document.

Information submitted as a comment concerning this notice may be claimed confidential by marking any part or all of that information as ''Confidential Business Information'' (CBI). Information so marked will not be disclosed except in accordance with procedures set forth in 40 CFR part 2. A copy of the comment that does not contain CBI must be submitted for inclusion in the public record. Information not marked confidential may be disclosed publicly by EPA without prior notice. All written comments will be available for public inspection in Rm. 1132 at the address given above, from 8 a.m. to 4:30 p.m., Monday through Friday, excluding holidays.

FOR FURTHER INFORMATION CONTACT: By mail: Julie Fry, Biopesticides and Pollution Prevention Division (7501W), Office of Pesticide Programs, Environmental Protection Agency, 401 M St., SW., Washington, DC 20460. Office location and telephone number: Rm. CS51B6, Westfield Building North Tower, 2800 Crystal Drive, Arlington, VA 22202, (703) 308–8582; e-mail: fry.julie@epamail.epa.gov.

SUPPLEMENTARY INFORMATION: EPA received applications from Lakeshore Enterprises, 2804 Benzie Highway, Benzonia, MI 49616, to register the pesticide products Green Screen Bags and Green Screen Powder (EPA File Symbols 69090–R and 69090–E), animal repellants containing the active ingredient meat meal at 99 percent for both products, an active ingredient not included in any previously registered products pursuant to the provisions of section 3(c)(4) of FIFRA. These products are used for agricultural, vegetable, ornamentals, turf, tree, vine, and other terrestrial crops. Notice of receipt of these applications does not imply a decision by the Agency on the applications.

Notice of approval or denial of an application to register a pesticide product will be announced in the Federal Register. The procedure for requesting data will be given in the Federal Register if an application is approved.

Comments received within the specified time period will be considered before a final decision is made; comments received after the time specified will be considered only to the extent possible without delaying processing of the application.

A record has been established for this notice under docket number [OPP–30396] (including comments and data submitted electronically as described below). A public version of this record, including printed, paper versions of electronic comments, which does not include any information claimed as CBI, is available for inspection from 8 a.m. to 4:30 p.m., Monday through Friday, excluding legal holidays. The public record is located in Rm. 1132 of the Public Response and Program Resources Branch, Field Operations Division (7506C), Office of Pesticide Programs, Environmental Protection Agency, Crystal Mall #2, 1921 Jefferson Davis Highway, Arlington, VA.

Electronic comments can be sent directly to EPA at:

opp-docket@epamail.epa.gov

Electronic comments must be submitted as an ASCII file avoiding the use of special characters and any form of encryption.

The official record for this notice, as well as the public version, as described above will be kept in paper form. Accordingly, EPA will transfer all comments received electronically into printed, paper form as they are received and will place the paper copies in the official record which will also include all comments submitted directly in writing. The official record is the paper record maintained at the address in

''ADDRESSES'' at the beginning of this document.

Written comments filed pursuant to this notice, will be available in the Public Response and Program Resources Branch, Field Operations Division at the address provided from 8 a.m. to 4:30 p.m., Monday through Friday, excluding legal holidays. It is suggested that persons interested in reviewing the application file, telephone this office at (703–305–5805), to ensure that the file is available on the date of intended visit.

Authority: 7 U.S.C. 136.

List of Subjects

Environmental protection, Pesticides and pests, Product registration.

Dated: October 24, 1995.

Janet L. Andersen,

Acting Director, Biopesticides and Pollution Prevention Division, Office of Pesticide Programs.

[FR Doc. 95–27061 Filed 10–31–95; 8:45 am]

BILLING CODE 6560–50–F

[FRL–5323–3]

Proposed Administrative Agreement

AGENCY: Environmental Protection Agency (USEPA).

ACTION: Proposed settlement.

SUMMARY: USEPA is proposing to further settlement of a claim under Section 107 of Comprehensive Environmental Response, Compensation and Liability Act (CERCLA) for response costs incurred during removal activities at the Nelson McCoy Pottery site in Roseville, OH. Respondents have agreed to reimburse USEPA in the amount of $12,000. USEPA today is proposing to approve this settlement offer because it reimburses USEPA, in part, for costs incurred during USEPA's removal action.

DATES: Comments on this proposed settlement must be received by December 1, 1995.

ADDRESSES: Copies of the proposed settlement are available at the following address for review: (It is recommended that you telephone Ms. Cheryl Allen at (312) 353–6196 before visiting the Region V Office). U.S. Environmental Protection Agency, Region V, Office of Superfund, Removal and Enforcement Response Branch, 77 W. Jackson Blvd., Chicago, Illinois 60604.

Comments on this proposed settlement should be addressed to: (Please submit an original and three copies, if possible) Cheryl Allen, Community Relations Coordinator, Office of Public Affairs, U.S. Environmental Protection Agency, Region V, 77 W. Jackson Boulevard (P–19J), Chicago, Illinois 60604, (312) 353–6196.

FOR FURTHER INFORMATION CONTACT: Cheryl Allen, Office of Public Affairs, at (312) 353–6196.

SUPPLEMENTARY INFORMATION: The Nelson McCoy Pottery site, an abandoned pottery production plant located in a rural/residential area in Roseville, Ohio (Muskingum County), is not on the National Priorities List. In response to a request from the State of Ohio, USEPA investigated the Nelson McCoy site and undertook response actions designed to minimize the immediate threat, test the materials involved and properly dispose of the hazardous waste.

Respondents are two corporations that allegedly generated hazardous substances at the Site in the form of lead contaminated water, flammable wastes and hazardous solid wastes. A 30-day period, beginning on the date of publication, is open pursuant to section 122(i) of CERCLA for comments on the proposed settlement.

Comments should be sent to Ms. Cheryl Allen of the Office of Public Affairs (P–19J), U.S. Environmental Protection Agency, Region V, 77 W. Jackson Boulevard, Chicago, Illinois 60604.

Wendy L. Carney,

Acting Director for Superfund Division.

[FR Doc. 95–27068 Filed 10–31–95; 8:45 am]

BILLING CODE 6560–50–M

FEDERAL COMMUNICATIONS COMMISSION

Notice of Public Information Collections being Reviewed by the Federal Communications Commission, Comments Requested

October 26, 1995.

The Federal Communications, as part of its continuing effort to reduce paperwork burden invites the general public and other Federal agencies to take this opportunity to comment on the following proposed and/or continuing information collections, as required by the Paperwork Reduction Act of 1995, Public Law 104–13. Comments are requested concerning (a) whether the proposed collection of information is necessary for the proper performance of the functions of the Commission, including whether the information shall have practical utility; (b) the accuracy of the Commissions burden estimates; (c)ways to enhance the quality, utility, and clarity of the information collected and (d) ways to minimize the burden of the collection of information on the respondents, including the use of automated collection techniques or other forms of information technology.

Written comments should be submitted on or before [insert date 60 days after date of publication in the Federal Register]. If you anticipate that you will be submitting comments, but find it difficult to do so within the period of time allowed by this notice, you should advise the contact listed below as soon as possible.

Direct all comments to Dorothy Conway, Federal Communications, Room 234, 1919 M St., NW., Washington, DC 20554 or via internet to dconway@fcc.gov.

For additional information or copies of the information collections contact Dorothy Conway at 202–418–0217 or via internet at dconway@fcc.gov.

OMB Approval Number: 3060–0484.

Title: Amendment of Part 63 of the Commissions Rules to Provide for Notification of Common Carriers of Service Disruptions - Section 63.100.

Form No.: N/A.

Type of Review: Revision of existing collection.

Respondents: Businesses or other for-profit.

Number of Respondents: 208.

Estimated Time Per Response: 5 hours.

Total Annual Burden: 1,040.

Needs and Uses: 47 CFR Section 63.100 requires that any local exchange or interexchange common carrier that operates transmission or switching facilites and provides access service or interstate or international telecommunications service that experiences an outage on any facilites which it owns or operates must notify the Commission if such service outage continues for 30 minutes or more. An initial and a final report is required for each outage. In an Order of Reconsideration in CC Docket No. 91–273, the Commission amended the rules to require, among other things, that local exchange or interexchange common carriers or competitive access providers that operate either transmission or switching facilites and provide access service or interstate or international telecommunications service report outages that effect 30,000 or more customers or that affect special facilities and report fire-related incidents impacting 1,000 or more lines. With such reports the FCC can monitor and take effective action to ensure network reliability.

Federal Communications Commission.

William F. Caton,

Acting Secretary.

[FR Doc. 95–27043 Filed 10–31–95; 8:45 am]

BILLING CODE 6712–01–F

FEDERAL EMERGENCY MANAGEMENT AGENCY

[FEMA–1069–DR]

Florida; Amendment to Notice of a Major Disaster Declaration

AGENCY: Federal Emergency Management Agency (FEMA).

ACTION: Notice.

SUMMARY: This notice amends the notice of a major disaster for the State of Florida, (FEMA–1069–DR), dated October 4, 1995, and related determinations.

EFFECTIVE DATE: October 25, 1995.

FOR FURTHER INFORMATION CONTACT: Pauline C. Campbell, Response and Recovery Directorate, Federal Emergency Management Agency, Washington, DC 20472, (202) 646–3606.

SUPPLEMENTARY INFORMATION: The notice of a major disaster for the State of Florida dated October 4, 1995, is hereby amended to include the following areas among those areas determined to have been adversely affected by the catastrophe declared a major disaster by the President in his declaration of October 4, 1995:

The counties of Calhoun and Taylor for Individual Assistance, Public Assistance and Hazard Mitigation Assistance.

(Catalog of Federal Domestic Assistance No. 83.516, Disaster Assistance.)

G. Clay Hollister,

Deputy Associate Director, Response and Recovery Directorate.

[FR Doc. 95–27081 Filed 10–31–95; 8:45 am]

BILLING CODE 6718–02–P

FEDERAL RESERVE SYSTEM

Area Bancshares Corporation, Owensboro, Kentucky; Notice to Engage in Certain Nonbanking Activities

Area Bancshares Corporation, Owensboro, Kentucky (Applicant) has given notice pursuant to section 4(c)(8) of the Bank Holding Company Act (12 U.S.C. 1843 (c)(8)) (BHC Act) and § 225.23 of the Board's Regulation Y (12 CFR 225.23) to engage indirectly through Five Paces Software. Inc., Atlanta, Georgia (FPSI), a wholly owned subsidiary of Security First Network Bank, FSB, Pineville, Kentucky (SFNB), in certain nonbanking activities involving data processing required for the provision by SFNB of electronic banking services over the nonproprietary computer network known as the ''Internet.'' SFNB has received approval from the Office of Thrift Supervision to provide certain banking services to its customers over the Internet, including deposit and bill-paying services.

Applicant proposes to acquire a 4.9 voting common stock interest and an additional preferred stock interest in SFNB, which acquire FPSI as its wholly owned subsidiary. Applicant proposes thereby indirectly to market, design, develop, and provide ongoing technical support of data processing software for the electronic transmission of financial, banking, and economic data for financial institutions seeking to provide banking service over the Internet, pursuant to § 223.25(b)(7) of the Board's Regulation Y. Applicant will also be a software licensee of FPSI and will have a director on FPSI's board of directors. Applicant seeks approval to conduct the proposed data processing activities nationwide.

FPSI will provide data processing and security software to financial institutions seeking to provide banking services to their customers over the Internet. Applicant indicates that this software is designed to enable electronic transmission of banking, financial and economic data in a secure environment over the Internet. FPSI also will provide financial institutions ongoing technical support related to its software, customization and installation services, and data center operations. Moreover, FPSI expects to develop additional data processing services that will allow customers to provide secure access to accounts across other channels such as through modems over public telephone lines.

Section 4(c)(8) of the BHC Act provides that a bank holding company may, with Board approval, engage in any activity ''which the Board after due notice and opportunity for hearing has determined (by order or regulation) to be so closely related to banking or managing or controlling banks as to be a proper incident thereto.'' 12 U.S.C. 1843(c)(8). In publishing the proposal for comment, the Board does not take a position on issues raised by the proposal. Notice of the proposal is published solely in order to seek the views of interested persons on the issues presented by the notice, and does not represent a determination by the Board that the proposal meets or is likely to meet the standards of the BHC Act.

Any comments or requests for hearing should be submitted in writing and received by William W. Wiles, Secretary, Board of Governors of the Federal Reserve System, Washington, D.C. 20551, not later than November 16, 1995. Any request for a hearing on this proposal must, as required by § 262.3(e) of the Board's Rules of Procedure (12 CFR 262.3(e)), be accompanied by a statement of the reasons why a written presentation would not suffice in lieu of a hearing, identifying specifically any questions of fact that are in dispute, summarizing the evidence that would be presented at a hearing, and indicating how the party commenting would be aggrieved by approval of the proposal. The notice may he inspected at the offices of the Board of Governors or the Federal Reserve Bank of St. Louis.

Board of Governors of the Federal Reserve System, October 26, 1995.

Jennifer J. Johnson,

Deputy Secretary of the Board.

[FR Doc. 95–27053 Filed 10–31–95; 8:45 am]

BILLING CODE 6210–01–F

Huntington Bancshares Incorporated, et al.; Formations of; Acquisitions by; and Mergers of Bank Holding Companies

The companies listed in this notice have applied for the Board's approval under section 3 of the Bank Holding Company Act (12 U.S.C. 1842) and § 225.14 of the Board's Regulation Y (12 CFR 225.14) to become a bank holding company or to acquire a bank or bank holding company. The factors that are considered in acting on the applications are set forth in section 3(c) of the Act (12 U.S.C. 1842(c)).

Each application is available for immediate inspection at the Federal Reserve Bank indicated. Once the application has been accepted for processing, it will also be available for inspection at the offices of the Board of Governors. Interested persons may express their views in writing to the Reserve Bank or to the offices of the Board of Governors. Any comment on an application that requests a hearing must include a statement of why a written presentation would not suffice in lieu of a hearing, identifying specifically any questions of fact that are in dispute and summarizing the evidence that would be presented at a hearing.

Unless otherwise noted, comments regarding each of these applications must be received not later than November 24, 1995.

A. Federal Reserve Bank of Cleveland (John J. Wixted, Jr., Vice President) 1455

East Sixth Street, Cleveland, Ohio 44101:

1. Huntington Bancshares Incorporated and Huntington Bancshares Florida, Inc., both of Columbus, Ohio; to acquire 100 percent of the voting shares of The Peoples Bank of Lakeland, Florida, Lakeland, Florida, which will be merged with The Huntington National Bank of Lakeland, Lakeland, Florida, a *de novo* institution.

B. Federal Reserve Bank of Chicago (James A. Bluemle, Vice President) 230 South LaSalle Street, Chicago, Illinois 60690:

1. WFC, Inc., Waukon, Iowa; to acquire 100 percent of the voting shares of Viking State Bank & Trust, Decorah, Iowa (in organization).

C. Federal Reserve Bank of Minneapolis (James M. Lyon, Vice President) 250 Marquette Avenue, Minneapolis, Minnesota 55480:

1. First Community Bancorp, Inc., Glasgow, Montana; to acquire 100 percent of the voting shares of Culbertson Ban Corp, Culbertson, Montana, and thereby indirectly acquire Culbertson State Bank of Culbertson, Montana, Culbertson, Montana.

D. Federal Reserve Bank of Kansas City (John E. Yorke, Senior Vice President) 925 Grand Avenue, Kansas City, Missouri 64198:

1. BOK Financial Corp., Tulsa, Oklahoma; to acquire 11 percent of the voting shares of Security National Bancshares of Sapulpa, Inc., Sapulpa, Oklahoma, and thereby indirectly acquire Security National Bank of Sapulpa, Sapulpa, Oklahoma.

2. FSC Bancshares, Inc., Cameron, Missouri; to acquire 100 percent of the voting shares of Farmers and Valley Bank, Tarkio, Missouri.

E. Federal Reserve Bank of Dallas (Genie D. Short, Vice President) 2200 North Pearl Street, Dallas, Texas 75201-2272:

1. First Financial Bankshares, Inc., Abilene, Texas, and First Financial Bankshares of Delaware, Inc., Wilmington, Delaware; to acquire Parker Bancshares, Inc. Dover, Delaware, and Weatherford National Bancshares, Inc., Weatherford, Texas, and thereby indirectly acquire Weatherford National Bank, Weatherford, Texas.

F. Federal Reserve Bank of San Francisco (Kenneth R. Binning, Director, Bank Holding Company) 101 Market Street, San Francisco, California 94105:

1. Northern California Bancorp, Inc., Monterey, California; to become a bank holding company by acquiring 100 percent of the voting shares of Monterey County Bank, Monterey California.

Board of Governors of the Federal Reserve System, October 26, 1995.

Jennifer J. Johnson,

Deputy Secretary of the Board.

[FR Doc. 95–27052 Filed 10–31–95; 8:45 am]

BILLING CODE 6210–01–F

Huntington Bancshares Incorporated, Notice to Engage in Certain Nonbanking Activities

Huntington Bancshares Incorporated, Columbus, Ohio (Applicant), has given notice pursuant to section 4(c)(8) of the Bank Holding Company Act (12 U.S.C. 1843(c)(8)) (BHC Act) and § 225.23 of the Board's Regulation Y (12 CFR 225.23) to engage indirectly through Five Paces Software, Inc., Atlanta, Georgia (FPSI), a wholly owned subsidiary of Security First Network Bank, FSB, Pineville, Kentucky (SFNB), in certain nonbanking activities involving data processing required for the provision by SFNB of electronic banking services over the nonproprietary computer network known as the ''Internet.'' SFNB has received approval from the Office of Thrift Supervision to provide certain electronic banking services to its customers over the Internet, including deposit and bill-paying services.

Applicant proposes to acquire a 4.9 voting common stock interest and an additional preferred stock interest in SFNB, which will acquire FPSI as its wholly owned subsidiary. Applicant proposes, thereby indirectly to market, design, develop, and provide ongoing technical support of data processing software for the electronic transmission of financial, banking, and economic data for financial institutions seeking to provide banking services to their customers over the Internet, pursuant to § 225.25(b)(7) of the Board's Regulation Y. Applicant will also be a software licensee of FPSI and will have a director on FPSI's board of directors. Applicant seeks approval to conduct the proposed data processing activities nationwide.

FPSI will provide data processing and security software to financial institutions seeking to provide banking, services to their customers over the Internet. Applicant indicates that this software is designed to enable electronic transmission of banking, financial, and economic data in a secure environment over the Internet. FPSI also will provide financial institutions ongoing technical support related to its software, customization and installation services, and data center operations. Moreover, FPSI expects to develop additional data processing services that will allow customers to provide secure access to accounts across other channels, such as through modems across public telephone lines.

Section 4(c)(8) of the BHC Act provides that a bank holding company may, with Board approval, engage in any activity ''which the Board after due notice and opportunity for hearing has determined (by order or regulation) to be so closely related to banking or managing or controlling banks as to be a proper incident thereto.'' 12 U.S.C. 1843(c)(8). In publishing the proposal for comment, the Board does not take a position on issues raised by the proposal. Notice of the proposal is published solely in order to seek the views of interested persons on the issues presented by the notice, and does not represent a determination by the Board that the proposal meets or is likely to meet the standards of the BHC Act.

Any comments or requests for hearing should be submitted in writing and received by William W. Wiles, Secretary, Board of Governors of the Federal Reserve System, Washington, D.C. 20551, not later than November 16, 1995. Any request for a hearing on this proposal must, as required by § 262.3(e) of the Board's Rules of Procedure, be accompanied by a statement of the reasons why a written presentation would not suffice in lieu of a hearing, identifying specifically any questions of fact that are in dispute, summarizing the evidence that would be presented at a hearing, and indicating how the party commenting would be aggrieved by approval of the proposal. The notice may be inspected at office of the Board of Governors or the Federal Reserve Bank of Cleveland.

Board of Governors of the Federal Reserve System, October 26, 1995.

Jennifer J. Johnson,

Deputy Secretary of the Board.

[FR Doc. 95–27051 Filed 10–31–95; 8:45 am]

BILLING CODE 6210–01–F

National City Corporation, et al.; Formations of, Acquisitions by, and Mergers of Bank Holding Companies; and Acquisitions of Nonbanking Companies

The companies listed in this notice have applied under § 225.14 of the Board's Regulation Y (12 CFR 225.14) for the Board's approval under section 3 of the Bank Holding Company Act (12 U.S.C. 1842) to become a bank holding company or to acquire voting securities of a bank or bank holding company. The listed companies have also applied under § 225.23(a)(2) of Regulation Y (12 CFR 225.23(a)(2)) for the Board's

approval under section 4(c)(8) of the Bank Holding Company Act (12 U.S.C. 1843(c)(8)) and § 225.21(a) of Regulation Y (12 CFR 225.21(a)) to acquire or control voting securities or assets of a company engaged in a nonbanking activity that is listed in § 225.25 of Regulation Y as closely related to banking and permissible for bank holding companies, or to engage in such an activity. Unless otherwise noted, these activities will be conducted throughout the United States.

The applications are available for immediate inspection at the Federal Reserve Bank indicated. Once the application has been accepted for processing, it will also be available for inspection at the offices of the Board of Governors. Interested persons may express their views in writing on the question whether consummation of the proposal can ''reasonably be expected to produce benefits to the public, such as greater convenience, increased competition, or gains in efficiency, that outweigh possible adverse effects, such as undue concentration of resources, decreased or unfair competition, conflicts of interests, or unsound banking practices.'' Any request for a hearing on this question must be accompanied by a statement of the reasons a written presentation would not suffice in lieu of a hearing, identifying specifically any questions of fact that are in dispute, summarizing the evidence that would be presented at a hearing, and indicating how the party commenting would be aggrieved by approval of the proposal.

Unless otherwise noted, comments regarding each of these applications must be received at the Reserve Bank indicated or the offices of the Board of Governors not later than November 24, 1995.

A. Federal Reserve Bank of Cleveland (John J. Wixted, Jr., Vice President) 1455 East Sixth Street, Cleveland, Ohio 44101:

1. National City Corporation, Cleveland, Ohio; to merge with Integra Financial Corporation, Pittsburgh, Pennsylvania, and thereby indirectly acquire Integra Holding Company, Wilmington, Delaware; Integra Bank, Pittsburgh, Pennsylvania; and Integra Trust Company, National Association, Punxsutawney, Pennsylvania.

In connection with this application, Applicant also has applied to acquire Advent Guaranty Corporation, Franklin, Pennsylvania, Advent Insurance Company, Franklin, Pennsylvania, and Integra Life Insurance Company, Pittsburgh, Pennsylvania, and thereby engage in underwriting for credit, life, accident and health insurance, directly related to extensions of credit, pursuant to § 225.25(b)(8)(i) of the Board's Regulation Y.

B. Federal Reserve Bank of Atlanta (Zane R. Kelley, Vice President) 104 Marietta Street, N.W., Atlanta, Georgia 30303:

1. FirstFed Bancorp, Inc., Bessemer, Alabama; to become a bank holding company by acquiring 100 percent of the voting shares of First State Bank of Bibb County, West Blocton, Alabama.

In connection with this application, Applicant also has applied to acquire First Federal Savings Bank, Bessemer, Alabama, and thereby engage in operating a savings association, pursuant to § 225.25(b)(9) of the Board's Regulation Y. The proposed activity will be conducted throughout the State of Alabama.

Board of Governors of the Federal Reserve System, October 26, 1995.

Jennifer J. Johnson,

Deputy Secretary of the Board.

[FR Doc. 95–27050 Filed 10–31–95; 8:45 am]

BILLING CODE 6210–01–F

National Westminster Bank plc; Acquisition of Company Engaged in Permissible Nonbanking Activities

The organization listed in this notice has applied under § 225.23(a)(2) or (f) of the Board's Regulation Y (12 CFR 225.23(a)(2) or (f)) for the Board's approval under section 4(c)(8) of the Bank Holding Company Act (12 U.S.C. 1843(c)(8)) and § 225.21(a) of Regulation Y (12 CFR 225.21(a)) to acquire or control voting securities or assets of a company engaged in a nonbanking activity that is listed in § 225.25 of Regulation Y as closely related to banking and permissible for bank holding companies. Unless otherwise noted, such activities will be conducted throughout the United States.

The application is available for immediate inspection at the Federal Reserve Bank indicated. Once the application has been accepted for processing, it will also be available for inspection at the offices of the Board of Governors. Interested persons may express their views in writing on the question whether consummation of the proposal can ''reasonably be expected to produce benefits to the public, such as greater convenience, increased competition, or gains in efficiency, that outweigh possible adverse effects, such as undue concentration of resources, decreased or unfair competition, conflicts of interests, or unsound banking practices.'' Any request for a hearing on this question must be accompanied by a statement of the reasons a written presentation would not suffice in lieu of a hearing, identifying specifically any questions of fact that are in dispute, summarizing the evidence that would be presented at a hearing, and indicating how the party commenting would be aggrieved by approval of the proposal.

Comments regarding the application must be received at the Reserve Bank indicated or the offices of the Board of Governors not later than November 16, 1995.

A. Federal Reserve Bank of New York (William L. Rutledge, Senior Vice President) 33 Liberty Street, New York, New York 10045:

1. National Westminster Bank plc, London, England; to acquire Gleacher & Co. Inc., New York, New York, and thereby engage in providing merger and acquisition advisory services and related corporate finance advice, pursuant to § 225.25(b)(4)(vi) of the Board's Regulation Y. These activities will be conducted worldwide.

Board of Governors of the Federal Reserve System, October 26, 1995.

Jennifer J. Johnson,

Deputy Secretary of the Board.

[FR Doc. 95–27049 Filed 10–31–95; 8:45 am]

BILLING CODE 6210–01–F

The Royal Bank of Scotland Group plc, et al.; Notice of Applications to Engage de novo in Permissible Nonbanking Activities

The companies listed in this notice have filed an application under § 225.23(a)(1) of the Board's Regulation Y (12 CFR 225.23(a)(1)) for the Board's approval under section 4(c)(8) of the Bank Holding Company Act (12 U.S.C. 1843(c)(8)) and § 225.21(a) of Regulation Y (12 CFR 225.21(a)) to commence or to engage *de novo*, either directly or through a subsidiary, in a nonbanking activity that is listed in § 225.25 of Regulation Y as closely related to banking and permissible for bank holding companies. Unless otherwise noted, such activities will be conducted throughout the United States.

Each application is available for immediate inspection at the Federal Reserve Bank indicated. Once the application has been accepted for processing, it will also be available for inspection at the offices of the Board of Governors. Interested persons may express their views in writing on the question whether consummation of the proposal can ''reasonably be expected to produce benefits to the public, such as greater convenience, increased competition, or gains in efficiency, that outweigh possible adverse effects, such

as undue concentration of resources, decreased or unfair competition, conflicts of interests, or unsound banking practices.'' Any request for a hearing on this question must be accompanied by a statement of the reasons a written presentation would not suffice in lieu of a hearing, identifying specifically any questions of fact that are in dispute, summarizing the evidence that would be presented at a hearing, and indicating how the party commenting would be aggrieved by approval of the proposal.

Unless otherwise noted, comments regarding the applications must be received at the Reserve Bank indicated or the offices of the Board of Governors not later than November 16, 1995.

A. Federal Reserve Bank of Boston (Robert M. Brady, Vice President) 600 Atlantic Avenue, Boston, Massachusetts 02106:

1. The Royal Bank of Scotland Group plc; The Royal Bank of Scotland plc, both of Edinburgh, United Kingdom, and Citizens Financial Group, Inc., Providence, Rhode Island; to engage *de novo* through their subsidiary, Citizens Investment Securities, Inc., Providence, Rhode Island, in providing securities brokerage activities, pursuant to § 225.25(b)(15) of the Board's Regulation Y.

B. Federal Reserve Bank of New York (William L. Rutledge, Senior Vice President) 33 Liberty Street, New York, New York 10045:

1. National Westminster Bank plc, London, England; to engage *de novo* in community development activities, pursuant to § 225.25 (b)(6) of the Board's Regulation Y.

Board of Governors of the Federal Reserve System, October 26, 1995.

Jennifer J. Johnson,

Deputy Secretary of the Board.

[FR Doc. 95–27048 Filed 10–31–95; 8:45 am]

BILLING CODE 6210–01–F

Shen Financial Fund I, L.P., et al.; Change in Bank Control Notices; Acquisitions of Shares of Banks or Bank Holding Companies

The notificants listed below have applied under the Change in Bank Control Act (12 U.S.C. 1817(j)) and § 225.41 of the Board's Regulation Y (12 CFR 225.41) to acquire a bank or bank holding company. The factors that are considered in acting on the notices are set forth in paragraph 7 of the Act (12 U.S.C. 1817(j)(7)).

The notices are available for immediate inspection at the Federal Reserve Bank indicated. Once the notices have been accepted for processing, they will also be available for inspection at the offices of the Board of Governors. Interested persons may express their views in writing to the Reserve Bank indicated for that notice or to the offices of the Board of Governors. Comments must be received not later than November 16, 1995.

A. Federal Reserve Bank of Philadelphia (Michael E. Collins, Senior Vice President) 100 North 6th Street, Philadelphia, Pennsylvania 19105:

1. Shen Financial Fund I, L.P.; Shen Management Partnership, L.P. (Z. Shenkman); Shen Management Corp. (collectively, the Shen Fund) and Zeev Shenkman, all of Bala Cynwyd, Pennsylvania; to acquire an additional 11.64 percent, for a total of 16.31 percent, of the voting shares of Execufirst Bancorp, Inc., Philadelphia, Pennsylvania, and thereby indirectly acquire First Executive Bank, Philadelphia, Pennsylvania.

B. Federal Reserve Bank of Atlanta (Zane R. Kelley, Vice President) 104 Marietta Street, N.W., Atlanta, Georgia 30303:

1. Richard C. Skates, Woodland, Georgia; to acquire a total of 74.35 percent of the voting shares of Canebrake Bancshares, Inc., Uniontown, Alabama, and thereby indirectly acquire First State Bank of Uniontown, Uniontown, Alabama.

C. Federal Reserve Bank of Chicago (James A. Bluemle, Vice President) 230 South LaSalle Street, Chicago, Illinois 60690:

1. John F. Edge, Baxter, Iowa; to retain 43.17 percent of the outstanding common shares of Baxter Insurance Agency, Inc., Baxter, Iowa, and thereby indirectly retain shares of State Savings Bank, Baxter, Iowa.

D. Federal Reserve Bank of Dallas (Genie D. Short, Vice President) 2200 North Pearl Street, Dallas, Texas 75201-2272:

1. Austin County Bankshares Employee Stock Ownership Plan, Bellville, Texas; to acquire an additional 3.17 percent, for a total of 12.80 percent, of the voting shares of Austin County Bankshares, Inc., Bellville, Texas, and thereby indirectly acquire Austin County State Bank, Bellville, Texas.

Board of Governors of the Federal Reserve System, October 26, 1995.

Jennifer J. Johnson,

Deputy Secretary of the Board.

[FR Doc. 95-27047 Filed 10-31-95; 8:45 am]

BILLING CODE 6210-01-F

Wachovia Corporation, Notice to Engage in Certain Nonbanking Activities

Wachovia Corporation, Winston-Salem, North Carolina (Applicant), has given notice pursuant to section 4(c)(8) of the Bank Holding Company Act (12 U.S.C. 1843(c)(8)) (BHC Act) and § 225.23 of the Board's Regulation Y (12 CFR 225.23) to engage indirectly through Five Paces Software, Inc., Atlanta, Georgia (FPSI), a wholly owned subsidiary of Security First Network Bank, FSB, Pineville, Kentucky (SFNB), in certain nonbanking activities involving data processing required for the provision by SFNB of electronic banking services over the nonproprietary computer network known as the ''Internet.'' SFNB has received approval from the Office of Thrift Supervision to provide certain electronic banking services to its customers over the Internet, including deposit and bill-paying services.

Applicant proposes to acquire a 4.9 voting common stock interest and an additional preferred stock interest in SFNB, which will acquire FPSI as its wholly owned subsidiary. Applicant proposes, thereby indirectly to market, design, develop, and provide ongoing technical support of data processing software for the electronic transmission of financial, banking, and economic data for financial institutions seeking to provide banking services to their customers over the Internet, pursuant to § 225.25(b)(7) of the Board's Regulation Y. Applicant will also be a software licensee of FPSI and will have a director on FPSI's board of directors. Applicant seeks approval to conduct the proposed data processing activities nationwide.

FPSI will provide data processing and security software to financial institutions seeking to provide banking, services to their customers over the Internet. Applicant indicates that this software is designed to enable electronic transmission of banking, financial, and economic data in a secure environment over the Internet. FPSI also will provide financial institutions ongoing technical support related to its software, customization and installation services, and data center operations. Moreover, FPSI expects to develop additional data processing services that will allow customers to provide secure access to accounts across other channels, such as through modems across public telephone lines.

Section 4(c)(8) of the BHC Act provides that a bank holding company may, with Board approval, engage in any activity ''which the Board after due notice and opportunity for hearing has

determined (by order or regulation) to be so closely related to banking or managing or controlling banks as to be a proper incident thereto.'' 12 U.S.C. 1843(c)(8). In publishing the proposal for comment, the Board does not take a position on issues raised by the proposal. Notice of the proposal is published solely in order to seek the views of interested persons on the issues presented by the notice, and does not represent a determination by the Board that the proposal meets or is likely to meet the standards of the BHC Act.

Any comments or requests for hearing should be submitted in writing and received by William W. Wiles, Secretary, Board of Governors of the Federal Reserve System, Washington, D.C. 20551, not later than November 16, 1995. Any request for a hearing on this proposal must, as required by § 262.3(e) of the Board's Rules of Procedure, be accompanied by a statement of the reasons why a written presentation would not suffice in lieu of a hearing, identifying specifically any questions of fact that are in dispute, summarizing the evidence that would be presented at a hearing, and indicating how the party commenting would be aggrieved by approval of the proposal. The notice may be inspected at office of the Board of Governors or the Federal Reserve Bank of Richmond.

Board of Governors of the Federal Reserve System, October 26, 1995.

Jennifer J. Johnson,

Deputy Secretary of the Board.

[FR Doc. 95–27046 Filed 10–31–95; 8:45 am]

BILLING CODE 6210–01–F

GENERAL SERVICES ADMINISTRATION

[GSA Bulletin FTR 17]

Federal Travel Regulation; Promoting, Encouraging, and Facilitating the Use of Frequent Traveler Programs and Benefits

AGENCY: Federal Supply Service, GSA.

ACTION: Notice of bulletin.

SUMMARY: The attached bulletin informs agencies of methods available for use in complying with the requirement of § 6008 of Pub. L. 103–355, Oct. 13, 1994, to promote, encourage, and facilitate Federal employee use while on official travel of airline, hotel, and car rental vendor frequent traveler programs for the purpose of maximizing cost savings.

EFFECTIVE DATE: This bulletin is effective November 1, 1995.

FOR FURTHER INFORMATION CONTACT: Jane E. Groat, General Services Administration, Transportation Management Division (FBX), Washington, DC 20406, telephone 703–305–5745.

SUPPLEMENTARY INFORMATION: Section 6008 of the Federal Acquisition Streamlining Act of 1994 (Pub. L. 103–355, Oct. 13, 1994) requires the Administrator of General Services to issue guidelines to ensure that agencies promote, encourage, and facilitate Federal employee use when on official travel of frequent traveler programs offered by airlines, hotels, and car rental vendors for the purpose of realizing to the maximum extent practicable cost savings for official travel.

The law further stipulates that any awards accrued through official travel and granted under a frequent traveler program shall be used only for official travel. The General Services Administration (GSA) must report to the Congress by October 13, 1995, on efforts to promote the use of frequent traveler programs by Federal employees.

GSA has identified an incentive awards program as well as the frequent traveler benefits tracking services described in the attached bulletin to assist agencies in complying with the requirements of § 6008.

Dated: October 24, 1995.

Sean Allan,

Acting Assistant Commissioner, Office of Transportation and Property Management.

Attachment

ATTACHMENT

[GSA Bulletin FTR 17]

October 24, 1995

To: Heads of Federal agencies

Subject: Promoting, encouraging, and facilitating the use of frequent traveler programs and benefits

1. *Purpose.* This bulletin informs agencies of methods available for use in complying with the requirement of § 6008 of Pub. L. 103–355, Oct. 13, 1994, to promote, encourage, and facilitate Federal employee use of airline, hotel, and car rental vendor frequent traveler programs for the purpose of maximizing cost savings while on official travel.

2. *Background.* Section 6008 of the Federal Acquisition Streamlining Act of 1994 (Pub. L. 103–355, Oct. 13, 1994) (the Act) requires the Administrator of General Services to issue guidelines to ensure that agencies promote, encourage, and facilitate Federal employee use of frequent traveler programs offered by airlines, hotels, and car rental vendors for the purpose of realizing to the maximum extent practicable cost savings for official travel. Section 6008 further requires that ''[a]ny awards granted under such a frequent traveler program accrued through official travel shall be used only for official travel.''

a. In November 1989, the General Services Administration (GSA) issued Federal Travel Regulation (FTR) Amendment 3 (54 FR 47523, Nov. 15, 1989) instructing agencies to avail themselves of cost savings opportunities by encouraging employees to participate in frequent traveler programs offered by airlines, hotels, and car rental vendors. Amendment 3 authorized agencies to reimburse employees for the cost of entering a frequent traveler program when the program is expected to result in savings to the Government. Finally, Amendment 3 specified that frequent traveler benefits earned in connection with official travel must be used only for official travel. The provisions of Amendment 3 currently are contained in FTR § 301–1.103(f).

b. GSA is issuing the guidelines contained in this bulletin to inform agencies of authority to establish incentive award programs to assist agencies in promoting, and encouraging employee participation in, frequent traveler programs. The guidelines also apprise agencies of commercially available frequent traveler benefit management and tracking services that are designed to help facilitate use of frequent traveler programs to produce cost savings.

3. *Cash incentive programs.* The Government Employees Incentive Awards Act of September 1, 1954 (5 U.S.C. 4501–4507), authorizes an agency to pay a cash award to an employee who by his/her personal effort contributes to the efficiency or economy of Government operations. The Office of Personnel Management has implemented the regulations and instructions under which agency awards programs are carried out (5 CFR part 451).

NOTE: In keeping with the spirit of re-engineering travel, agencies are encouraged to develop and implement an incentive awards program as a means of rewarding Federal employees who through their own initiative save the agency money while on official travel. As an example, GSA has developed an internal Travel Savings Program to award GSA employees who take the initiative to accrue travel savings. GSA's program, where the awards are based on participation and paid at the end of the fiscal year, is available as a guide.

4. *Frequent traveler software and services.* Frequent traveler management software and services, which show the impact of frequent traveler benefits

earned in connection with official travel, are commercially available on the open market. The software and services include a variety of recommended management options to save time, money, and staffing. The software and services also make recommendations for policy development, program enrollment, program administration, and earned award processing.

5. *Expiration date.* This bulletin expires on December 31, 1996.

6. *For further information contact.* Jane E. Groat, General Services Administration, Transportation Management Division (FBX), Washington, DC 20406, telephone 703–305–5745.

[FR Doc. 95–27090 Filed 10–31–95; 8:45 am]

BILLING CODE 6820–24–F

DEPARTMENT OF HEALTH AND HUMAN SERVICES

Centers for Disease Control and Prevention

[INFO–95–05]

Proposed Data Collections Submitted for Public Comment and Recommendations

In compliance with the requirement of Section 3506(c)(2)(A) of the Paperwork Reduction Act of 1995 for opportunity for public comment on proposed data collection projects, the Centers for Disease Control and Prevention (CDC) will publish periodic summaries of proposed projects. To request more information on the proposed projects or to obtain a copy of the data collection plans and instruments, call the CDC Reports Clearance Officer on (404) 639–3453.

Comments are invited on: (a) Whether the proposed collection of information is necessary for the proper performance of the functions of the agency, including whether the information shall have practical utility; (b) the accuracy of the agency's estimate of the burden of the proposed collection of information; (c) ways to enhance the quality, utility, and clarity of the information to be collected; and (d) ways to minimize the burden of the collection of information on respondents, including through the use of automated collection techniques for other forms of information technology. Send comments to Wilma Johnson, CDC Reports Clearance Officer, 1600 Clifton Road, MS–D24, Atlanta, GA 30333. Written comments should be received within 60 days of this notice.

Proposed Projects

1. The National Ambulatory Medical Care Survey (NAMCS)—(0920–0234)—Extension—The National Ambulatory Medical Care Survey (NAMCS) was conducted annually from 1973 to 1981, again in 1985, and resumed as an annual survey in 1989 by the National Center for Health Statistics, CDC. The NAMCS samples from all office visits within the United States made by ambulatory patients to non-Federal office-based physicians engaged in direct patient care. More than 70 percent of all direct ambulatory medical care visits occur in physicians' offices. To complement these data, in 1992 NCHS initiated the separate National Hospital Ambulatory Medical Care Survey (NHAMCS). These two surveys constitute the ambulatory care component of the National Health Care Survey (NHCS), and provide coverage of more than 90 percent of U.S. ambulatory medical care. NAMCS data include patients' demographic characteristics and medical problems, and the physicians' diagnostic services, therapeutic prescriptions and disposition decisions. These annual data may be used to monitor change and its effects and stimulate further improvements to the use, organization, and delivery of ambulatory care. Users of NAMCS data include Congress and federal agencies (e.g. NIMH, NIAAA, NCI, HRSA), state and local governments, medical schools, schools of public health, colleges and universities, private businesses, nonprofits, and individual practitioners and administrators. The total cost to respondents is estimated at $2,570,400.

Respondents	No. of respondents	No. of responses/respondents	Avg. burden/response (in hrs.)	Total burden (in hrs.)
Private, Office-based Physicians Forms:				
Induction	3000	1	0.250	750
Patient Record	3000	30	0.033	2970
Total	.....	.....	.....	3,720

2. The National Hospital Ambulatory Medical Care Survey (NHAMCS)—(0920–0278)—Extension—The National Hospital Ambulatory Medical Care Survey (NHAMCS) has been conducted annually since 1992 by the National Center for Health Statistics, CDC. The NHAMCS is the principal source of data on the 153 million visits to hospital emergency and outpatient departments. It is the only source of nationally representative estimates of outpatient demographics, diagnoses, diagnostic services, medication therapy, and the patterns of use of care in hospitals which differ in size, location, and ownership. NHAMCS is also the only source of national estimates on causes of non-fatal injury for visits to emergency and outpatient departments.

These data complement those from the National Ambulatory Medical Care Survey (NAMCS), on visits to non-Federal physicians in office-based practices. NHAMCS data are essential for planning health services, improving medical education, determining health care work force needs, and assessing health. Users of NHAMCS data include Congress, Federal agencies such as NIH, private groups such as the American Heart Association, universities, and state offices of public health. The total cost to respondents is estimated at $180,000.

Respondents	No. of respondents	No. of responses/respondents	Avg. burden/response (in hrs.)	Total burden (in hrs.)
Noninstitutional, general and short stay, hospital outpatient and emergency departments forms:				
Hospital Induction	600	1	1.0	600

Respondents	No. of respondents	No. of responses/respondents	Avg. burden/response (in hrs.)	Total burden (in hrs.)
Ambulatory Unit Induction	600	1	1.2	720
Emergency Department Patient Record	600	50	0.06	1,800
Outpatient Department Patient Record	600	150	0.06	5,400
Total	.....	.....	.....	8,520

3. TB Statistics and Evaluation Activity—(0920–0026)—Revision—This is a request to revise the currently approved data collection, which authorizes the collection of information that constitutes a national information system for tuberculosis. These data provide reliable and consistent information on the extent and distribution of TB in the U.S. Two forms will be deleted from the current information package: CDC 72.16 Tuberculosis Program Management Report, Contact Follow-up; and CDC 72.21 Tuberculosis Program Management Report, Completion of Preventive Therapy. The burden for those two forms is 351 hours. Performance Measurement Report, Contact Investigation and Preventive Therapy for Contacts will replace form 72.16; Performance measurement Report, Preventive Therapy will replace form 72.21, and the new form Performance Measurement Report, Screening will be added. The total burden for these three new forms is 238 hours, a decrease of 113 hours over the burden in the current package.

The existing form for contact follow-up (72.16) is being replaced because it does not stratify the contacts by the sputum smear status of the index case. Sputum smear cases are most likely to be highly infectious and their contacts should receive the highest priority for identification, evaluation, and preventive therapy. Furthermore, it does not reflect whether or not the contacts to a specific cohort of TB cases who were started on preventive therapy actually complete a recommended course of medication. Recently infected contacts are one of the highest risk groups for developing active TB and therefore should receive high priority for completing preventive therapy. The existing form on completion of preventive therapy (72.21) is being replaced because it does not stratify persons starting and completing preventive therapy by HIV status, the highest risk factor ever identified for developing active TB. Furthermore, it does not separate those who are at high risk because they are more likely to be infected with TB or because they are more likely to develop TB disease once infected. Finally, it does not specify the activity or group (e.g., correctional facility or drug treatment center) in which the preventive therapy is being carried out. The new screening form is being added because there is currently no mechanism for systematically collecting information from TB grant recipients on TB screening activities in various risk groups (e.g., persons with HIV infection) or in various settings (e.g., correctional facilities, drug treatment centers). The new form also collects data that determines of those screened, the number and percent found to have TB infection and who were subsequently placed on preventive therapy. CDC cannot currently determine whether grant recipients are appropriately carrying out these activities.

Respondents	No. of respondents	No. of responses/respondent	Avg. burden/response (in hrs.)	Total burden (in hrs.)
Performance Measurement Report, Contact Investigation and Preventive Therapy for Contacts	68	2	0.5	68
Performance Measurement Report, Preventive Therapy	68	2	1.0	136
Performance Measurement Report, Screening	68	2	0.25	34
Total	.....	.....	.....	238

4. Hanford Environmental Dose Reconstruction (HEDR) Project Milk Producers Survey—New—OMB approved the information collections for the ''Hanford Thyroid Disease Full Epidemiology Study'' under OMB No. 0920–0296 to determine the health effects to the public from radioactive releases from the Hanford Nuclear Site Operations during the 1940's and 1950's. A primary component of these releases was radioactive iodine. Consumption of fresh milk from cows that have eaten contaminated vegetation and fresh leafy vegetables and eggs from chickens with access to outdoor vegetation are important pathways of radioactive iodine to the human body which adversely affects the thyroid gland. To estimate the doses to the thyroid that individuals and populations could have received, historical milk cow and chicken feeding and distribution practices must be reconstructed for the downwind area. This information is particularly important for use in this ongoing study and its relation to radiation exposures. Researchers from LTG Associates will collect information from a representative sample of individuals who farmed in 7 counties within the study area during the periods of 1945 and 1951. There are no costs to the respondents.

Respondents	No. of respondents	No. of responses/respondents	Avg. burden/response (in hrs.)	Total burden (in hrs.)
Contact Potential Sources of Names of farmers	50	1	0.16	8

Respondents	No. of respondents	No. of responses/respondents	Avg. burden/response (in hrs.)	Total burden (in hrs.)
Initial Contact of Potential Candidates	1,600	1	0.16	267
Scheduling Interview	400	1	0.08	33
Telephone Interview	400	1	2	800
Total	.....	.....	.....	1,108

5. State-Based Evaluation of Trends and Risk Factors in Morbidity and Mortality from Sickle Cell Disease after Newborn Screening—New—Children with sickle cell disease are at increased risk for mortality and morbidity, especially in the first three years of life. The need for early diagnosis and preventive medical intervention is the rationale for newborn hemoglobinopathy screening programs, now operating in more than 40 states. Although clinical trials have clearly demonstrated the efficacy of early medical intervention, more information is needed regarding the actual utilization of available therapies and preventive measures in large populations, health statuses of children identified by newborn screening programs, and risk factors for adverse health outcomes. Potential risk factors include extent of medical care follow-up, location of treatment, the use of penicillin prophylaxis, immunization patterns, as well as parental social, demographic and educational factors. In FY 1995, CDC awarded $150,000 to three state health departments to assist in their efforts to ascertain health status and risk factors for young children with sickle cell disease. States will be using these funds to obtain information about individual children through structured questionnaires directed toward their parents and physicians. There are no costs to the respondents.

Respondents	No. of respondents	No. of responses/respondent	Avg. burden/response (in hrs.)	Total burden (in hrs.)
Parents	3,000	1	1.5	4.5
Physicians	4,500	1	1	4.5
Total	.....	.....	.....	9

Dated: October 26, 1995.

Joseph R. Carter,

Acting Associate Director for Management and Operations, Centers for Disease Control and Prevention (CDC).

[FR Doc. 95–27056 Filed 10–31–95; 8:45 am]

BILLING CODE 4163–18–P

National Institute for Occupational Safety and Health; Meeting

The National Institute for Occupational Safety and Health (NIOSH) of the Centers for Disease Control and Prevention (CDC) announces the following meeting.

Name: Breast Cancer Incidence Among Occupational Cohorts Exposed to Ethylene Oxide and Polychlorinated Biphenyls.

Time and Date: 9 a.m.–3:30 p.m.; December 13, 1995.

Place: Hubert Humphrey Building, Room 800, 200 Independence Avenue, SW., Washington, DC 20201.

Status: Open to the public, limited only by the space available. The room accommodates approximately 50 people.

Purpose: The purpose of this meeting is to obtain expert advice regarding technical and scientific aspects of the study ''Breast Cancer Incidence Among Occupational Cohorts Exposed to Ethylene Oxide and Polychlorinated Biphenyls'' being conducted at NIOSH. Participants on the Science Advisory Panel will review the study protocol and provide advice on the conduct of the study.

Viewpoints and suggestions from industry, labor, academia, other government agencies and the public are invited.

Contact Person for Additional Information: Teresa Schnorr, Ph.D., NIOSH, CDC, Mailstop R–13, 4676 Columbia Parkway, Cincinnati, Ohio 45226, telephone 513/841–4587.

Dated: October 25, 1995.

Carolyn J. Russell,

Director, Management Analysis and Services Office, Centers for Disease Control and Prevention (CDC).

[FR Doc. 95–27030 Filed 10–31–95; 8:45 am]

BILLING CODE 4163–19–M

Public Health Service

Notice Regarding Section 602 of the Veterans Health Care Act of 1992 Contracted Pharmacy Services

AGENCY: Public Health Service, HHS.

ACTION: Notice.

SUMMARY: Section 602 of Public Law 102–585, the ''Veterans Health Care Act of 1992'' (the ''Act''), enacted section 340B of the Public Health Service Act (''PHS Act''), ''Limitation on Prices of Drugs Purchased by Covered Entities.'' Section 340B provides that a manufacturer who sells covered outpatient drugs to eligible (covered) entities must sign a pharmaceutical pricing agreement with the Secretary of Health and Human Services (HHS) in which the manufacturer agrees to charge a price for covered outpatient drugs that will not exceed an amount determined under a statutory formula.

The purpose of this notice is to inform interested parties of the following proposed guidelines regarding contracted pharmacy services. Public comment is invited.

DATES: The public is invited to submit comments on the proposed guidelines by December 1, 1995. After consideration of the comments submitted, the Secretary will issue the final guidelines.

FOR FURTHER INFORMATION CONTACT: Marsha Alvarez, R. Ph., Director, Drug Pricing Program, Bureau of Primary Health Care, 4350 East-West Highway, Bethesda, MD 20814, Phone (301) 594–4353, FAX (301) 594–4982.

SUPPLEMENTARY INFORMATION: The Health Resources and Services Administration, Bureau of Primary Health Care, acting through the Office of Drug Pricing, has developed contracted pharmacy service guidelines to facilitate

program implementation. For covered entities that wish to utilize contracted pharmacy services to dispense section 340B outpatient drugs, the Office of Drug Pricing is proposing a contracted pharmacy service agreement between the covered entity and the pharmacy which would include the following provisions:

(a) The covered entity will purchase the drug. A ''ship to-bill to'' procedure may be used in which the covered entity purchases the drug, the manufacturer bills the covered entity for the drugs that it purchased but ships the drugs directly to the contracted pharmacy.

(b) The contractor will provide all pharmacy services (e.g., dispensing, record keeping, drug utilization review, formulary maintenance, patient profile, counseling). Each facility which purchases its covered outpatient drugs has the option of individually contracting for pharmacy services with the pharmacy of its choice. The limitation of one pharmacy contractor per facility does not preclude the selection of a pharmacy contractor with multiple pharmacy sites, as long as only one site is used for the contracted services. [The Office of Drug Pricing will be evaluating the feasibility of permitting these facilities to contract with more than one site and contractor.]

(c) If the patient does not elect to use the contracted service, the patient may obtain the prescription from the pharmacy provider of his/her choice.

(d) The contractor may provide the covered entity services, other than pharmacy, at the option of the covered entity (e.g., home care, reimbursement services).

(e) The contractor and the covered entity will adhere to all Federal, State, and local laws and requirements. Additionally, all PHS grantees will adhere to all rules and regulations established by the grant funding office.

(f) The contractor will provide the covered entity quarterly financial statements, a detailed status report of collections, and a summary of receiving and dispensing records.

(g) The contractor will establish and maintain a tracking system suitable to prevent diversion of section 340B discounted drugs to individuals who are not patients of the covered entity.

(h) Both parties agree that they will not resell or transfer a drug purchased at section 340B pricing to an individual who is not a patient of the covered entity. *See* section 340B(a)(5)(B). If a contract pharmacy is found to have violated this prohibition, the pharmacy will pay the entity the amount of the discount in question so that the entity can reimburse the manufacturer.

(i) A covered entity using contracted pharmacy services will not use drugs purchased under section 340B to dispense Medicaid prescriptions unless the contract pharmacy and the state medicaid agency have established an arrangement which will prevent duplicate discounts/rebates.

(j) Both parties understand that they are subject to audits (by the PHS and participating manufacturers) of records that directly pertain to the entity's compliance with the drug resale or transfer prohibition and the prohibition against duplicate Medicaid rebates and PHS discounts. *See* section 340B(a)(5).

(k) Upon request, a copy of this contracted pharmacy service agreement will be provided to a participating manufacturer which sells covered outpatient drugs to the covered entity. All confidential propriety information may be deleted from the document.

Covered entities which elect to utilize this contracted pharmacy mechanism must submit to the Office of Drug Pricing a certification that they have signed an agreement with the contracted pharmacy containing the aforementioned provisions.

Dated: August 18, 1995.

Ciro V. Sumaya,

Administrator, Health Resources and Services Administration.

[FR Doc. 95–27032 Filed 10–31–95; 8:45 am]

BILLING CODE 4160–15–P

DEPARTMENT OF HOUSING AND URBAN DEVELOPMENT

[Docket No. FR–3971–N–02]

The Performance Review Board

AGENCY: Department of Housing and Urban Development.

ACTION: Notice of appointments.

SUMMARY: The Department of Housing and Urban Development announces the appointments of Linda S. Reid and Karen A. Miller as members of the Departmental Performance Review Board. The address is: Department of Housing and Urban Development, Washington, DC 20410.

FOR FURTHER INFORMATION CONTACT: Persons desiring any further information about the Performance Review Board and its members may contact Earnestine Pruitt, Deputy Director, Executive Personnel Management Division, Department of Housing and Urban Development, Washington, DC 20410, telephone (202) 708–1381. (This is not a toll free number.)

Dated: October 25, 1995.

Dwight P. Robinson,

Acting Deputy Secretary, Department of Housing and Urban Development.

[FR Doc. 95–27027 Filed 10–31–95; 8:45 am]

BILLING CODE 4210–32–M

DEPARTMENT OF THE INTERIOR

Bureau of Indian Affairs

Notice of Intent To Prepare an Environmental Impact Statement for a Proposed Lease To Construct and Operate an Integrated Waste Management Facility on the Cortina Indian Rancheria, Colusa County, CA

AGENCY: Bureau of Indian Affairs, Interior.

ACTION: Notice of Intent and Public Scoping Meeting.

SUMMARY: This notice advises the public that the Bureau of Indian Affairs, in cooperation with the Cortina Indian Rancheria of Wintun Indians, intends to prepare an Environmental Impact Statement (EIS) for a proposed lease to construct and operate an integrated waste management facility on the Cortina Rancheria of the Cortina Band of Wintun Indians in Colusa County, California. A description of the proposed project, location, and environmental issues to be addressed in the EIS are provided below (supplementary information). In addition to this notice, a public meeting will be held to describe the proposed action and to receive public comments regarding the scope of the EIS. The public will be invited to participate in the scoping process, review of the draft EIS, and a public meeting.

This notice is published in accordance with the National Environmental Policy Act (NEPA) regulations found in 40 CFR 1501.7. The purpose of this notice is to solicit suggestions and information from other agencies and the public on the scope of issues to be addressed in the EIS. Comments and participation in this scoping process are encouraged.

DATES: Comments should be received by November 29, 1995. A public scoping meeting will be held on November 16, 1995.

ADDRESSES: Comments should be addressed to Mr. Ronald Jaeger, Area Director, Sacramento Area Office, 2800 Cottage Way, Room W–2550, Sacramento, California 95825. A public scoping meeting will be held on November 16, 1995, at 7:30 p.m. at the Cortina Indian Rancheria Satellite Office

located at 570 Sixth Street, Williams, California.

FOR FURTHER INFORMATION CONTACT: Mr. Robert Eckart, Area Environmental Protection Specialist, Bureau of Indian Affairs, Sacramento Area Office, 2800 Cottage Way, Room W–2550, Sacramento, California 95825, telephone number (916) 979–2575.

SUPPLEMENTARY INFORMATION: Cortina Integrated Waste Management, Inc. proposes to lease 443 acres of the Cortina Indian Rancheria for the purpose of constructing and operating an integrated waste management facility for recycling or disposal of a variety of non-hazardous wastes. The project will be required to meet all applicable environmental standards and regulations.

The proposed project includes a 200-acre sanitary landfill, a non-source separated materials recovery facility, an organic waste composting area, and a petroleum-contaminated (PC) soils bioremediation facility. The facility would receive daily shipments of municipal solid waste, compostable organic wastes, and PC soils from nearby counties. Approximately 400 to 1,500 tons per day of waste materials would be delivered to the facility by truck. Offsite roadway improvements would be necessary.

The Cortina Indian Rancheria is located in the foothills that form the west side of the Sacramento Valley in southwestern Colusa County approximately 50 miles northwest of the city of Sacramento. The Rancheria is in a sparsely populated area with cattle grazing being the predominant land use in the vicinity. The project site has moderately to steeply sloping terrain covered with oak woodland and chaparral and is currently undeveloped.

The EIS will assess alternatives to the proposed project, including: (1) A smaller project; (2) a project without composting, recycling, or PC soils remediation; and (3) no project. The EIS will address numerous environmental issues, including: geology, topography, soils, water resources, air quality, living resources, cultural resources, traffic, land use, visual resources, socioeconomic, public health and safety, and noise. The range of issues addressed may be expanded based on comments received during the scoping process.

Dated: October 25, 1995.

Ada E. Deer,

Assistant Secretary—Indian Affairs.

[FR Doc. 95–27024 Filed 10–31–95; 8:45 am]

BILLING CODE 4310–02–P

Receipt of Petitions for Reassumption of Jurisdiction from the Washoe Tribe of Nevada and California, Gardnerville, NV; the Red Cliff Band of Lake Superior Chippewas, Bayfield, Wisconsin; and the Forest County Potawatomi Community, Crandon, WI

AGENCY: Bureau of Indian Affairs, Interior.

ACTION: Notice.

SUMMARY: This notice is published in exercise of authority delegated by the Secretary of the Interior to the Assistant Secretary - Indian Affairs by 209 DM 8.

The Indian Child Welfare Act of 1978 (Pub. L. 95–608) provides, subject to certain specified conditions, that Indian tribes may petition the Secretary of the Interior for reassumption of jurisdiction over Indian child custody proceedings.

This is notice that petitions have been received by the Secretary from the Washoe Tribe of Nevada and California, Gardnerville, Nevada; the Red Cliff Band of Lake Superior Chippewas, Bayfield, Wisconsin; and the Forest County Potawatomi Community, Crandon, Wisconsin, for the tribal reassumption of jurisdiction over Indian child custody proceedings. The petitions are under review and may be inspected at the Bureau of Indian Affairs, Division of Social Services, 1849 C St., NW., room 310 SIB, Washington, D. C. 20240.

Dated: October 25, 1995.

Ada E. Deer,

Assistant Secretary—Indian Affairs.

[FR Doc. 95–27036 Filed 10–31–95; 8:45 am]

BILLING CODE 4310–02–P

Yerington Paiute Tribe—Liquor Control Ordinance No. OY–95–04

AGENCY: Bureau of Indian Affairs, Interior.

ACTION: Notice.

SUMMARY: This notice is published in accordance with authority delegated by the Secretary of the Interior to the Assistant Secretary—Indian Affairs by 209 DM 8, and in accordance with the Act of August 15, 1953, 67 Stat. 586, 18 U.S.C. § 1161. I certify that the Yerington Paiute Tribe—Liquor Control Ordinance was duly adopted by the Yerington Paiute Tribe on October 19, 1994. The ordinance provides for the regulation, distribution, possession, sale, and consumption of liquor on lands held in trust belonging to the Yerington Paiute Tribe.

DATES: This ordinance is effective as of November 1, 1995.

FOR FURTHER INFORMATION CONTACT: Chief, Branch of Judicial Services, Division of Tribal Government Services, 1849 C Street, N.W., MS 2611 MIB, Washington, D.C. 20240–4001; telephone 202/208–4400.

SUPPLEMENTARY INFORMATION: The Yerington Paiute Tribe Liquor Control Ordinance is to read as follows:

Law and Order Code

Title 18—Alcohol Control

18–10 Legalization of Alcohol and Repealer

18–10–010 Introduction of Alcoholic Beverages

(a) The introduction, possession, use and consumption of alcoholic beverages shall be lawful within the exterior boundaries of the land in the State of Nevada under the territorial jurisdiction of the Yerington Paiute Tribe so long as it is done in accordance with the provisions of this Title and any other ordinance or laws of the Yerington Paiute Tribe not inconsistent with this Title.

(b) As used in this ordinance ''Alcoholic Beverages'' means liquor, beer, wine, and every liquid containing one-half of one percent or more alcohol by volume and which is used for beverage purposes

18–10–020 Repeal

All ordinance resolutions or acts of the Yerington Paiute Tribal Council which are in conflict with this Title are hereby repealed.

18–20 Minors, Disturbing the Peace

18–20–010 Drinking Age

It is unlawful for any person under the age of 21 years to possess, sell, trade, consume, receive, transfer, manufacture, or give away any alcoholic beverages including but not limited to wine, beer, ale and hard liquor.

18–20–020 Providing Liquor to Minors

It is unlawful for any person to furnish any alcoholic beverage to any person under the age of 21 years or to leave or to deposit any alcoholic beverages with the intent or implication that the alcoholic beverage shall be procured by any person under the age of 21. Punishment for this offense shall be the same as for driving under the influence under Section 18–30–020 except that there shall be no driving privilege suspension.

18–20–030 Drinking in Public Prohibited

It is unlawful for any Person to use or consume alcoholic beverages in any public place except as allowed by special tribal permit pursuant to Section 18–40–020.

18–20–040 Disturbing the Peace While Intoxicated

It is unlawful for any person to create a disturbance or nuisance in a public or private place while under the influence of alcohol if said disturbance or nuisance interrupts another in the quiet enjoyment (appropriate to time and place) of public or private property.

18–30 Vehicles and Alcohol

18–30–010 Vehicles and Open Containers

It is unlawful to use, consume or possess any open bottle, can, package or container of alcoholic beverage in any part of a motor vehicle with access available to the driver or passengers while such vehicle is moving. An open container shall be any container with the seal broken that is not completely empty.

18–40 Selling Liquor, Special Permits

18–40–010 Selling Liquor

Except as set forth in 18–40–020, Special Permits, below, it shall be unlawful to sell alcoholic beverages by the glass, bottle, can or package except on the premises of a business operated by the Yerington Paiute Tribe.

18–40–020 Special Permits

The Tribal Council may issue and sell special permits to private individuals or groups who have applied for such a permit, for the public sale and consumption of beer and wine within certain particularly defined areas for special occasions.

18–50 Punishment, Bail, Civil Protective Custody, Impound

18–50–010 Punishment

(a) Any Indian who violates any provision of this Title shall be deemed guilty of a Class A offense. All periods of jail time whether mandatory or discretionary, imposed relative to an offense for intoxicating beverages, may be substituted day for day by placement in a residential treatment center.

(b) Any Non-Indian who violates any provision of this Title shall be referred to the State of Nevada and/or Federal Law Enforcement authorities for prosecution under applicable law.

18–50–020 Bail

The minimum bail for any offense under this Title is $500.00.

18–50–030 Civil Protective Custody

(a) Assuming a person is not committing any offense under this Title (eg. public consumption, disturbing the peace) then it shall not be unlawful to merely appear in a public or private place in an intoxicated condition.

(b) However, except as provided in subsection (f), any person shall be placed under civil protective custody by a peace officer, if found in a public or private place under the influence of alcohol in such a condition that he is unable to exercise care for his own health or safety or the health or safety of others for whom the person is responsible and where no one else is present to insure such health or safety of the person or others.

(c) A peace officer may use upon such person such force as would be lawful if he were effecting an arrest.

(d) If a licensed facility for treatment of alcohol abusers exists for convenient use of the Yerington Paiute Tribe, any such Indian person shall be taken there. If no such facility exists the person shall be placed in the jail facility used by the Yerington Paiute Tribe for the person's own health and safety. Placement shall be until the person is not under the influence of alcohol or a period not less than 12 hours, except that the person may not be kept against his will for longer than 72 hours.

(e) The placement of such Indian person in civil protective custody shall be recorded at the facility or jail to which he is delivered and communicated at the earliest practical time to his family or next of kin if they can be located.

(f) The provisions of this section shall not apply to any driver arrested for the offense of operating a vehicle under the influence of alcoholic beverage.

(g) Any Non-Indian person taken into civil protective custody shall be referred to the State of Nevada and/or Federal Law Enforcement authorities or any other agency of the State of Nevada which would have authority to receive and/or assist such a person had said person taken into civil protective custody under the laws of the State of Nevada.

Dated: October 19, 1995.

Ada E. Deer,

Assistant Secretary—Indian Affairs.

[FR Doc. 95–27102 Filed 10–31–95; 8:45 am]

BILLING CODE 4310–02–P

Bureau of Land Management

[NM–070–1430–01; NMNM95192]

Notice of Right-of-Way Application; New Mexico

AGENCY: Bureau of Land Management, Interior.

ACTION: Notice Correction.

SUMMARY: This is a correction of a Notice for a right-of-way application from El Paso Natural Gas Company, serialized as NMNM95192. The legal description in the notice placed in the Federal Register/Vol. 60, NO. 183/ Thursday, September 21, 1995/page 49004 should read.

New Mexico Principal Meridian

T. 24 N., R. 13 W.,

Sec. 30, Lot 4, E½SW¼.

Dated: October 19, 1995.

Ilyse K. Gold,

Acting Assistant District Manager for Resources.

[FR Doc. 95–27042 Filed 10–31–95; 8:45 am]

BILLING CODE 4310–FB–M

[NM–017–1430–01; NMNM 94897]

Notice of Proposed Withdrawal and Public Meeting; New Mexico

AGENCY: Bureau of Land Management, Interior.

ACTION: Notice.

SUMMARY: The Bureau of Indian Affairs (BIA) proposes to withdraw 13,150 acres of public land to allow for uses beneficial to the Navajo Nation and Zuni Pueblo. The proposed withdrawal would also provide protection of sites having cultural, historical, religious, geological and archaeological significance to the Navajo Nation and Zuni Pueblo. This notice closes the land for up to 2 years from surface entry and mining. The land will remain open to mineral leasing.

DATES: Comments must be received by January 30, 1996. In addition to written comments, a public meeting will be held on December 13, 1995.

ADDRESSES: Comments should be sent to the Albuquerque District Manager, BLM, 435 Montano Road NE., Albuquerque, New Mexico 87107.

FOR FURTHER INFORMATION CONTACT: Debby Lucero, BLM, Rio Puerco Resource Area Office, 435 Montano Road NE., Albuquerque, New Mexico 87107, (505) 761–8787.

PUBLIC MEETING: The public is invited to attend a meeting to identify issues to be considered in connection with the proposed withdrawal. The meeting will take place on Wednesday, December 13, 1995, beginning at 7:00 p.m. in the auditorium of the J.F. Kennedy Middle School, 600 Boardman, Gallup, New Mexico.

SUPPLEMENTARY INFORMATION: On October 25, 1995, a petition was approved allowing the BIA to file an application to withdraw the following described land from settlement, sale, location, or entry under the general land laws including the mining laws but not from the mineral leasing laws or Indian laws, subject to valid existing rights:

New Mexico Principal Meridian

Area No. 1

Fort Wingate Depot Activity, Gallup, New Mexico

A tract of land situated in McKinley County, New Mexico, being more particularly described as follows:

Beginning at a point that bears N. 25°28′41″ E., a distance of 4,408.36 feet from the Northeast corner, Section 9, Township 13 North, Range 17 West of the New Mexico Principal Meridian;

Thence N. 1°45′16″ W., 14,465.4 ft.;
Thence S. 82°37′55″ E., 383.75 ft.;
Thence N. 45°22′28″ E., 354.95 ft.;
Thence S. 31°48′26″ E., 1,910.96 ft.;
Thence S. 87°10′22″ E., 532.14 ft.;
Thence N. 77°54′19″ E 234.87 ft.;
Thence N. 33°50′6″ E., 359.43 ft.;
Thence S. 59°5′2″ E., 676.88 ft.;
Thence S. 71°26′15″ E., 1,865.41 ft.;
Thence N. 26°12′19″ E., 2,570.64 ft.;
Thence N. 0°39′23″ E., 2,004.72 ft.;
Thence N. 89°47′7″ E., 8,759.88 ft.;
Thence S. 2°41′45″ E., 16,392.76 ft.;
Thence S. 88°33′11″ W., 15,201.65 ft. to the point of beginning, containing an unsurveyed area of 5,250 acres, more or less.

All bearings and distances are planimetric projections based on U.S. Geological Survey Maps and drawing C–1, Real Property Requirements—Site Map, Ballistic Missile Defense Organization, dated 3–17–94. This description should be considered subject to correction by survey.

Area No. 2

Fort Wingate Depot Activity, Gallup, New Mexico

A tract of land situated in McKinley County, New Mexico, being more particularly described as follows:

Beginning at a point that bears S. 8°8′28″ E., a distance of 22,782.22 feet from the Southeast corner, Section 9, Township 15 North, Range 17 West of the New Mexico Principal Meridian;

Thence N. 0°7′25″ W., 11,676.9 ft.;
Thence N. 90° E., 12,108.5 ft.;
Thence S. 46°13′27″ E., 1,791.1 ft.;
Thence S. 44°54′31″ W., 1,365.4 ft.;
Thence S. 10°58′13″ W., 1,465.4 ft.;
Thence S. 72°8′57″ W., 2,665.0 ft.;
Thence N. 60°16′14″ W., 1,898.7 ft.;
Thence S. 34°26′46″ W., 8,207.4 ft.;
Thence S. 15°51′47″ W., 1,391.6 ft.;
Thence S. 89°02′11″ W., 2,926.3 ft. to the point of beginning, containing an unsurveyed area of 2,043 acres, more or less.

All bearings and distances are planimetric projections based on U.S. Geological Survey Maps and drawing C–1, Real Property Requirements—Site Map, Ballistic Missile Defense Organization, dated 3–17–94. This description should be considered subject to correction by survey.

Area No. 3—Cantonment Area

Fort Wingate Depot Activity, Gallup, New Mexico

A tract of land situated in McKinley County, New Mexico, being more particularly described as follows:

Beginning at a point that bears S. 68°24′ E., a distance of 13,649.15 feet from the Southeast corner, Section 9, Township 15 North, Range 17 West of the New Mexico Principal Meridian;

Thence S. 60°13′36″ E., 1,265.55 ft.;
Thence S. 0°0′0″ E., 1,016.24 ft.;
Thence S. 71°11′54″ E., 1,692.37 ft.;
Thence S. 22°35′33″ W., 1,853.16 ft.;
Thence N. 67°36′10″ W., 1,237.77 ft.;
Thence N. 26°39′53″ W., 2,108.23 ft.;
Thence N. 00°00′00″ E., 667.65 ft., a line common to BMDO Radar/Optics Site #2;
Thence N. 06°37′15″ E., 883.67 ft. to the point of beginning, containing an unsurveyed area of 120 acres, more or less.

All bearings and distances are planimetric projections based on U.S. Geological Survey Maps and drawing C–1, Real Property Requirements—Site Map, Ballistic Missile Defense Organization, dated 3–17–94. This description should be considered subject to correction by survey.

Area No. 4

Fort Wingate Depot Activity, Gallup, New Mexico

Two tracts of land, totaling 5,739± acres, situated in McKinley County, New Mexico, being more particularly described as follows:

Tract 1—Bunker ''D'' Area

Beginning at a point that bears S. 37°49′12″ E., a distance of 18,224.48 feet from the Southeast corner, Section 9, Township 15 North, Range 17 West of the New Mexico Principal Meridian;

Thence S. 60°16′14″ E., 1,898.74 ft., a line common to Area No. 2;
Thence N. 69°8′55″ E., 2,714.48 ft., a line common to Area No. 2;
Thence S. 3°10′41″ W., 3,202.92 ft.;
Thence S. 72°46′30″ W., 4,686.48 ft.;
Thence N. 51°36′57″ W., 1,038.25 ft.;
Thence S. 41°41′41″ W., 764.52 ft.;
Thence N. 54°38′39″ W., 1,029.06 ft.;
Thence N. 34°02′58″ E., 4,697.19 ft. to the point of beginning, containing an unsurveyed area of 451 acres, more or less.

Tract 2—Unallocated Remainder Area

Beginning at a point that bears S. 74°38′26″ E., a distance of 2,687.86 feet from the Southeast corner, Section 9, Township 15 North, Range 17 West of the New Mexico Principal Meridian;

Thence S. 85°18′00″ E., 6,636.68 ft.;
Thence S. 71°16′54″ E., 18,233.26 ft.;
Thence N. 19°53′37″ E., 448.34 ft.;
Thence S. 71°15′19″ E., 1,235.34 ft.;
Thence S. 21°02′45″ E., 2,549.49 ft.;
Thence S. 03°58′43″ W., 2,659.78 ft.;
Thence S. 11°12′47″ W., 3,235.14 ft.;
Thence S. 19°05′08″ W., 2,255.71 ft.;
Thence S. 01°36′33″ W., 1,810.91 ft.;
Thence N. 90°00′00″ E., 76.28 ft.;
Thence S. 09°58′15″ E., 881.09 ft.;
Thence S. 88°16′06″ W., 1,628.45 ft.;
Thence S. 58°37′31″ W., 6,523.73 ft.;
Thence N. 32°46′39″ W., 1,503.30 ft.;
Thence N. 14°22′55″ E., 1,945.81 ft.;
Thence N. 79°03′44″ E., 3,393.33 ft.;
Thence N. 54°56′38″ E., 2,547.53 ft.;
Thence N. 14°38′35″ E., 1,408.95 ft.;
Thence S. 82°38′59″ W., 2,128.50 ft.;
Thence N. 35°17′51″ W., 3,036.98 ft.;
Thence S. 86°55′24″ W., 916.88 ft.;
Thence N. 69°02′44″ W., 1,525.16 ft.;
Thence N. 46°54′22″ W., 3,447.97 ft.;
Thence S. 46°05′23″ W., 358.35 ft.;
Thence N. 46°13′44″ W., 1,791.52 ft.;
Thence S. 90°00′00″ W., 12,108.52 ft.;
Thence N. 02°03′44″ W., 9,105.28 ft.;
Thence S. 86°57′48″ E., 7,029.20 ft.;
Thence S. 84°15′40″ E., 1,238.57 ft.;
Thence N. 67°30′23″ W., 1,361.36 ft.;
Thence N. 74°54′26″ W., 1,237.95 ft.;
Thence N. 88°02′22″ W., 5,802.06 ft.;
Thence N. 28°28′09″ W., 590.61 ft. to the point of beginning, containing an unsurveyed gross area of 5,793 acres, more or less, with exception of; a 299 acre, more or less, site designated for BMDO Radar/Optics Site #2; a 120 acre, more or less, site designated as the original Cantonment Area; and, approximately 19,000 lineal feet of 200-foot wide road/utility right of way using about 88 acres. The exceptions are described as:

BMDO Radar/Optics Site #2 (Exception)

Beginning at a point that bears S. 38°32′26″ E., a distance of 7,598.92 feet from the Southeast corner, Section 9, Township 15 North, Range 17 West of the New Mexico Principal Meridian;

Thence N. 59°49′57″ E., 2,510.3 ft.;
Thence S. 88°46′08″ E., 5,755.5 ft.;
Thence S. 06°37′15″ W., 1,095.5 ft.;
Thence S. 00°00′00″ E., 667.6 ft.;
Thence S. 90°00′00″ W., 7,772.9 ft.;
Thence N. 02°20′13″ W., 618.5 ft. to the point of beginning, containing an unsurveyed area of 299 acres, more or less.

Cantonment Area (Exception) Land Previously Transferred as Area No. 3

Beginning at a point that bears S. 68°24′ E., a distance of 13,649.15 feet from the Southeast corner, Section 9, Township 15 North, Range 17 West of the New Mexico Principal Meridian;

Thence S. 60°13′36″ E., 1,265.55 ft.;
Thence S. 0°0′0″ E., 1,016.24 ft.;
Thence S. 71°11′54″ E., 1,692.37 ft.;
Thence S. 22°35′33″ W., 1,853.16 ft.;
Thence N. 67°36′10″ W., 1,237.77 ft.;
Thence N. 26°39′53″ W., 2,108.23 ft.;
Thence N. 00°00′00″ E., 667.65 ft.;
Thence N. 06°37′15″ E., 883.67 ft. to the point of beginning, containing an unsurveyed area of 120 acres, more or less.

Road/Utility Right of Way (Exceptions)

(Main Entrance Road)

100 ft. on each side of centerlines described as beginning at a point on the northern military reservation boundary known as the traditional Main Entrance Road that bears S. 77°04′52″ E., a distance of 16,263.20 feet from the Southeast corner, Section 9, Township 15 North, Range 17 West of the New Mexico Principal Meridian;

Thence S. 18°58′59″ W., 4,376.63 ft.;
Thence S. 23°12′51″ W., 1,484.17 ft.;
Thence S. 45°29′10″ E., 4,101.73 ft.;
Less approximately 1,855 ft. passing through the Cantonment Area.

(Utility Row #1)

50 ft. on each side of centerlines described as beginning at a point that bears S. 21°40′01″ W., 826.96 ft. from the beginning point of the Main Entrance road;

Thence S. 71°12′02″ E., 1,692.58 ft.;
Thence S. 20°13′16″ W., 5,812.64 ft.

(Radar/Optics Site #2 Road)

50 ft. on each side of centerlines described as beginning at a point that bears S. 20°05′16″ W., 2,666.29 ft. from the beginning point of the Main Entrance road;

Thence N. 61°40′03″ W., 2,455.85 ft.

(Utility Row #2)

50 ft. on each side of centerlines described as beginning at a point that bears S. 19°07′14″ W., 3,804.88 ft. from the beginning point of the Main Entrance road;

Thence S. 68°32′05″ E., 1,557.76 ft.

All bearings and distances are planimetric projections based on U.S. Geological Survey Maps and drawing C–1, Real Property Requirements—Site Map, Ballistic Missile Defense Organization, dated 3–17–94. This description should be considered subject to correction by survey.

The purpose of the proposed withdrawal is to enable the Bureau of Indian Affairs to allow use of the improvements and land for the purposes described in the summary above.

For a period of 90 days from the date of publication of this notice, all persons who wish to submit comments, suggestions, or objections in connection with the proposed withdrawal may present their views in writing to the Albuquerque District Manager of the Bureau of Land Management.

The application will be processed in accordance with the regulations set forth in 43 CFR part 2300.

For a period of 2 years from the date of publication of this notice in the Federal Register, the land will be segregated as specified above unless the application is denied or canceled or the withdrawal is approved prior to that date. No temporary uses will be permitted during this segregative period except as specified in the Memorandum of Agreement between the Navajo Nation and Zuni Pueblo for the benefit and use of their respective people. The environmental cleanup actions by the Department of the Army and TPL, Inc. are not affected by the segregation.

The temporary segregation of the land in connection with a withdrawal application or proposal shall not affect administrative jurisdiction over the land, and the segregation shall not have the effect of authorizing any use of the land by the Bureau of Indian Affairs.

Dated: October 26, 1995.

Charna R. Lefton,

Acting District Manager.

[FR Doc. 95–27057 Filed 10–31–95; 8:45 am]

BILLING CODE 4310–FB–P

Fish and Wildlife Service

Availability of an Environmental Assessment (EA) and Receipt of an Application for an Incidental Take Permit (ITP) for the Red-Cockaded Woodpecker (RCW) by Potlatch Corporation for Timber Harvesting and Management in Calhoun, Cleveland, and Bradley Counties in South-Central Arkansas

AGENCY: Fish and Wildlife Service, Interior.

ACTION: Notice.

SUMMARY: Potlatch Corporation (Applicant) is seeking an ITP from the Fish and Wildlife Service (Service), pursuant to Section 10(a)(1)(B) of the Endangered Species Act (Act), as amended. The permit would authorize the take of the red-cockaded woodpecker (*Picoides borealis*), an endangered species, in Calhoun, Cleveland, and Bradley Counties in south-central Arkansas, for a period of 30 years. The proposed incidental take would be the inadvertent harvest of an unknown RCW cavity tree during forest management on land owned by the Applicant or other privately owned land where the Applicant has purchased timber.

The Service also announces the availability of a habitat conservation plan (HCP) and EA. The Applicant's HCP describes conservation measures that will be taken to avoid accidentally harvesting cavity trees. Also, the HCP delineates other measures to conserve cavity trees, cavity tree clusters, and RCW foraging habitat. The EA prepared by the Service describes the environmental consequences of issuing or denying the ITP. As stated in the EA, the Service proposes to issue the requested permit. This proposal is based on a preliminary determination that the Applicant has satisfied the requirements for permit issuance and that the HCP provides conservation benefits to RCWs that exceed the impact of inadvertently harvesting cavity trees. Copies of the EA and HCP may be obtained by making a written request to the Regional Office [See **ADDRESSES** below]. This notice is provided pursuant to Section 10(c) of the Act and National Environmental Policy Act Regulations (40 CFR 1506.6).

DATES: Written comments on the permit application, EA, and HCP should be received on or before December 1, 1995.

ADDRESSES: Persons wishing to review the application, HCP, and EA may obtain a copy by writing the Service's Southeast Regional Office, Atlanta, Georgia. Requests for the documents must be in writing to be processed. Documents will also be available for public inspection by appointment during normal business hours at the Regional Office, or the Jackson, Mississippi, Field Office. Written data or comments concerning the application, EA, or HCP should be submitted to the Regional Office. Please reference permit under PRT–807952 in such comments:

Regional Permit Coordinator, U.S. Fish and Wildlife Service, 1875 Century Boulevard, Suite 200, Atlanta, Georgia 30345 (404–679–7110, fax 404–679–7081)

Field Supervisor, U.S. Fish and Wildlife Service, 6578 Dogwood View Parkway, Suite A, Jackson, Mississippi 39213 (601–965–4900, fax 601–965–4340)

FOR FURTHER INFORMATION CONTACT: Will McDearman, Jackson, Mississippi, Field Office or Rick Gooch at the Atlanta, Georgia, Regional Office.

SUPPLEMENTARY INFORMATION: Section 9 of the Endangered Species Act (Act), and implementing regulations, prohibits the take of RCWs. Take, in part, is defined as an activity that kills, injures, harms, or harasses a listed endangered or threatened species. Section 10(a)(1)(B) of the Act provides an exemption, under certain circumstances, to the Section 9 prohibition if the taking is incidental to, and not the purpose of otherwise lawful activities.

The RCW is the only woodpecker in North America that excavates its roosting and nesting cavities in live pine trees. Cavities are located in heartwood that is usually infected and softened by the red-heart fungus (*Phellinus pini*). Mature trees usually 80 or more years old are typically selected for cavities because the heartwood is sufficiently large for a cavity and the incidence of red-heart fungus is greater in older trees. RCWs do not excavate and place cavities in sapwood.

RCWs are non-migratory, territorial, and live in family units that are called groups. A group usually consists of a breeding pair, offspring of the current year, and one or more male helpers that are offspring from previous years. Each bird has a roost cavity that, collectively,

comprise a cluster of cavity trees occupied by the group. Other cavities that are abandoned, inactive, or under construction may also occur in the cluster. RCWs forage for invertebrates on pine trees within and surrounding the cluster. Birds usually forage on larger and older pines. The foraging area will vary in size depending upon habitat quality, but birds generally forage within a one-half mile radius of the cluster.

Suitable habitat in the southern pine forest also consists of a vegetation structure affected by and maintained by fire. Encroachment of fire intolerant hardwoods into the forest midstory, particularly within clusters, can cause RCWs to abandon cluster and foraging habitat.

The number of RCW groups persisting today represents about 1 percent of the historical population that occupied the pre-Columbian southern pine forest. The decline of the RCW was initiated by the deforestation of the fire-maintained southern pine ecosystem at the turn of this century. Subsequent habitat loss and fragmentation has been caused by urbanization, fire exclusion, and forest management practices. Where forests exist today, most are either unsuitable or uninhabited by RCWs due to short harvest rotations, clear cutting, infrequently prescribed fire, and insufficient cluster and foraging habitat.

About 44 RCW groups inhabit land owned by the Applicant in south-central Arkansas. In the Draft RCW Procedures Manual for Private Lands (Draft Manual), the Service has proposed minimum forest management guidelines to avoid taking RCWs. The Draft Manual's recommendations provide the minimum quantitative and qualitative standards to avoid harm and harassment as a result of modifying RCW foraging and cluster habitat. The Applicant's HCP will provide cluster and foraging habitat in excess of that minimally recommended in the Draft Manual. Minimum foraging habitat guidelines recommend 3,000 ft^2 of pine basal area ($\geq$ 10″ DBH) within a 0.5 mile radius area of each active cluster. The Applicant's plan, which relies on uneven-aged forest management and select harvesting, currently provides an average of 8,188 ft^2 pine basal area for each RCW cluster. This quantity is about 2.7 times the minimum recommendation, and is about 96 percent of the amount (8,490 ft^2) the Service has established for foraging habitat on Federal lands at the higher standard of RCW recovery-level management. As the Applicant's foraging stands become fully stocked by the all-aged management objective, a target of 14,596 ft^2 of basal area may be obtained, about 1.7 times the amount recommended in the Service's RCW recovery plan.

Cluster management in the HCP involves measures to identify, mark, and map cavity trees, using an integrated Geographic Information System. Within each cluster, the Applicant will control hardwood encroachment, provide suitable replacement cavity trees, and prohibit the cutting of any active or inactive cavity tree. Active cavity trees lost due to natural factors such as lightning and wind will be replaced using artificial cavity inserts. Also, cavity restrictor plates will be installed when cavities are threatened by pileated woodpecker activity. The number of breeding pairs and the status of each cavity tree and cluster (active vs. inactive) will be determined every 3 years by the Applicant's monitoring and survey program.

The HCP also establishes annual employee training to effectively implement all elements of the plan. Such training includes the field identification of cavity trees, the provisions of records and monitoring, and all other elements of cluster and foraging habitat management.

An accidental harvest of a cavity tree associated with an unknown cluster is possible, though the Service believes the HCP minimizes such a chance. Even so, the net expected effect of the HCP and ITP is that the RCW population will either be sustained or increased. The EA considers the environmental consequences of two alternatives; issue the requested permit as conditioned by the HCP, or take no action (deny permit). The Service finds the greatest conservation benefits accompany the HCP and proposed permit. RCW management according to minimum private landowner guidelines, accompanying permit denial, would provide less conservation benefit. The Service's proposed alternative is to issue the requested ITP, based upon the submitted HCP. The principal environmental consequence of permit issuance is to sustain or enhance the status of the RCW, via implementation and funding the mitigation and minimization measures as outlined above.

Dated: October 23, 1995.

Noreen K. Clough,

Regional Director.

[FR Doc. 95–26998 Filed 10–31–95; 8:45 am]

BILLING CODE 4310–55–P

Minerals Management Service

Minerals Management Advisory Board, Outer Continental Shelf (OCS), Scientific Committee (SC); Announcement of Plenary Session

This Notice is issued in accordance with the provisions of the Federal Advisory Committee Act, Public Law 92–463, 5 U.S.C., Appendix I, and the Office of Management and Budget Circular A–63, Revised.

The Minerals Management Advisory Board OCS SC will meet in plenary sessions on Wednesday, November 29, and Thursday, November 30, 1995, at the Washington Dulles Airport Hilton, 13869 Park Center Road, Herndon, Virginia 22071, telephone (703) 478–2900.

The OCS SC is an outside group of scientists which advises the Director, MMS, on the feasibility, appropriateness, and scientific value of the MMS, OCS Environmental Studies Program (ESP).

Below is a schedule of meetings that will occur.

The SC will meet in plenary session on Wednesday, November 29, from 8:30 a.m. to 5:30 p.m.

The Committee will also meet in plenary session on Thursday, November 30, from 8:30 a.m. to 5 p.m. Discussion will focus on:

- Committee Business and Resolutions.
- Environmental Studies Program Status Review.
- MMS Goals and Objectives.

The meetings are open to the public. Approximately 30 visitors can be accommodated on a first-come-first-served basis at the plenary session.

A copy of the agenda may be requested from the MMS by writing Ms. Phyllis Clark at the address below.

Other inquiries concerning the OCS SC meeting should be addressed to Dr. Ken Turgeon, Executive Secretary to the OCS Scientific Committee, Minerals Management Service, 381 Elden Street, Mail Stop 4310, Herndon, Virginia 22070. He may be reached by telephone at (703) 787–1717.

Dated: October 18, 1995.

Thomas Gernhofer,

Associate Director for Offshore Minerals Management.

[FR Doc. 95–26997 Filed 10–31–95; 8:45 am]

BILLING CODE 4310–MR–M

Summary of Minerals Management Service Workshops on Expanded Use of Royalty-In-Kind (RIK) Procedures

AGENCY: Minerals Management Service, Interior.

ACTION: Summary and overview of RIK workshops.

SUMMARY: The Minerals Management Service (MMS) recently conducted a series of workshops to discuss ways of expanding the ongoing pilot program for collecting in-kind royalties on natural gas produced from Federal offshore leases. This notice contains a summary of the three workshops held in Houston (August 22, 1995), Denver (September 11) and New Orleans (September 15). The workshops were announced in a Federal Register Notice on July 19, 1995 (60 FR 37070).

On January 1, 1995, MMS initiated a Royalty Gas Marketing Pilot in the Gulf of Mexico. In the pilot, gas royalties are collected on an in-kind basis and sold directly to gas marketing companies.

The MMS has two objectives in conducting the current pilot. First, the MMS seeks to streamline royalty collections, and second, to test a process which promises increased efficiency and greater certainty in valuation. The MMS will issue an interim report on the pilot in November 1995 and a final report by June 30, 1996.

Comments offered in the workshops were generally favorable regarding the current pilot and were supportive of further MMS efforts to employ similar in-kind collection procedures. The workshops provided a useful forum for constructively discussing issues that have arisen in the current pilot and ways of improving future RIK efforts.

The comments and suggestions offered in the three workshops are combined into one narrative. The workshops were structured around the following panels: (1) Requirements placed on lessees, (2) requirements placed on purchasers, (3) contract terms and auction procedures, and (4) considerations and recommendations for expanding RIK collections. The following summary is organized around the principal themes which emerged in all of the panel discussions.

Reporting and Payment Procedures

1. Producers at the workshops emphasized that major benefits of gas RIK are reporting relief, reduced scope of audits and avoidance of disputes over valuation issues.

2. Marketers raised concerns over reporting and payment procedures. For example, marketers noted the awkwardness of requiring payment on the 25th of the month following production because, by that date, the marketers do not have the information on actual volumes. They are obligated to pay on nominated volumes, which may differ from the volume received. Typically, marketers don't have the information on actual volumes until about 40 days after the end of the month. While marketers can accommodate some differences between volumes nominated and volumes received, large discrepancies can be a problem. If the marketers pay for a volume of gas, they want to be assured that volume will be allocated to them.

3. A workshop participant noted that MMS is constrained in this issue by the fact that royalty payments are due the end of the month following production. This fact means that MMS could postpone the due dates to the end of the month, but not later. The argument was made that the lessee's payment in-kind satisfies the statutory requirements for timely payment, thus nullifying the requirement in terms of the purchaser's obligations. However, an MMS representative observed that, with delays in payments, the time value of money may be a concern, particularly in any future onshore programs in which the states eventually receive a portion of the royalty revenue forthcoming from the RIK gas purchasers.

4. A discussion followed on the requirement that producers must report to MMS information on RIK gas nominated each month. Producers question MMS' need to be informed about nominated volumes.

5. Producers pointed out that flash gas still poses a reporting burden that can be avoided. A producer attending the workshop suggested that flash gas should be included in the royalty gas volumes to eliminate the need to report it separately on an in-value basis. Several workshop participants thought that flash gas volumes could be included in the monthly imbalance account.

Producer Perspectives on Take Points for RIK Gas and Transportation Responsibility

1. Producers generally favor the use of the Facility Measurement Point (FMP) as the take point for the RIK gas. Several producers stated that responsibility for transportation downstream of the FMP belongs to the lessor or purchaser. Producers also said that the rates charged for the use of non-jurisdictional pipelines (pipelines over which the Federal Energy Regulatory Commission (FERC) has no regulatory jurisdiction) should be established through arm's-length negotiation between the producer and the purchaser. Some producers expressed the view that in the future, the Government needs to establish a procedure to accommodate changes in pipeline fees.

2. One producer and owner of non-jurisdictional pipelines defended the right to negotiate a pipeline fee in excess of the amount MMS allows as a deduction when lessees pay royalties in-value. Producers typically do not transport third party gas on their lateral (non-jurisdictional) pipelines, and, if they do, they negotiate rates. The producer expressed the view that the same should apply with RIK gas. The producer wanted to be able to receive a higher rate of return on pipeline investment by charging negotiated arm's-length rates to third-party marketers. The producer added that lessees cannot realize as much return on their pipeline investments on royalty gas which is paid in value as they can in arm's-length situations.

3. However, another producer pointed out that an attempt by producers to charge purchasers high rates for lateral pipelines could be counterproductive. The producer stated that, because of the benefits to be achieved in an RIK environment, a producer would be ''cutting off its nose to spite its face'' if it did not try to negotiate reasonable rates with prospective purchasers. The danger of charging high rates for lateral pipelines would be that MMS may revert to collecting the royalties on an in-value basis. A marketer responded that a lessee may be less inclined to charge reasonable rates if the lessee did not want its gas taken in-kind.

4. Several producers voiced concerns about the possibility of being forced to deliver RIK gas downstream of the FMP. One concern mentioned was the fact that some producers have no experience in moving gas away from the wellhead. But more common concerns revolved around bearing or sharing costs downstream of the FMP. One producer noted that in the design of the current pilot, there are no disputes over ''marketable condition.'' Another producer added that if MMS were to move the take point downstream of the FMP, disputes over transportation and marketable condition would be rekindled. A producer made the point that in addition to above reasons, the lessee would encounter difficulty in taking a monetary transportation deduction in those instances in which in-value payments are not being remitted on the property.

5. The observation was made that the MMS may have difficulty capturing downstream value unless MMS assumes some cost and risk. Such costs could include the provision of capital for the building of lateral lines and expenses related to aggregation of gas production. However, a workshop participant noted that lessors normally do not participate

in production, gathering, or transportation investments.

Purchaser's Viewpoints on Transportation Obligations and Associated Risk

1. In some cases, the purchasers of RIK gas had to make arrangements to transport gas through non-jurisdictional pipelines. Since the RIK gas is taken at or near the lease, the purchasers are responsible for transportation arrangements and costs. Comments revolved around the burdens placed on purchasers by this arrangement.

2. The point was made that most marketers are accustomed to buying large volumes at fixed points. In the case of this pilot, marketers had to get out maps and ''do their homework.'' Rather than deal with the possible transportation uncertainties, one marketer focused on leases in areas where it already had contracts.

3. The issue of negotiating the charges on non-jurisdictional pipelines was a major focus of attention. The strong bargaining position of producers was noted; the observation was made that gas producers have no need to transport gas on non-jurisdictional lines that they do not own. They also do not have to provide transportation for others on their lines. One representative of a marketing company observed that in the collection of royalties in-value, producers take an allowance on royalty payments for producer-owned laterals, and MMS knows the amount of the allowance. However, a third-party purchaser could not base its bid on that rate, because it may not be able to negotiate the same rate with the producer.

4. One marketer offered the idea that possibly MMS could negotiate non-jurisdictional pipeline rates up front and publish them in the Invitation for Bids (IFB, the contract instrument through which MMS competitively selected purchasers for RIK gas). Another marketer observed that a major issue is MMS' willingness to incur overhead costs in order to reduce the risk to the marketer. However, the point was acknowledged that the greater the task undertaken to reduce risk to marketers, the less reduction in administrative costs the MMS can achieve.

5. A commonly expressed view was that MMS could not force producers to charge marketers a rate based on the transportation allowances given for in-value royalty collection. The producers report a non-arm's-length rate, while the rate with marketers would be an arm's-length transaction. A marketer stated that it would be difficult to achieve a revenue neutral RIK program if lessees are allowed to charge more for lateral line transportation than their costs for purposes of non-arm's-length deductions under the in-value collection system.

6. Several gas marketing firms expressed a reluctance to bear either the transportation cost or the transportation risk associated with the purchase of RIK gas. The point was made that the Government's goals should be receipt of fair market value and reduction of risk faced by the purchaser (e.g., year-long risk for fluctuations in transportation charges). One workshop participant noted that it is not the industry norm for marketers to assume transportation risk for one year. Another noted that these are the most onerous contracts in the business and added that, normally, a marketer would avoid entering into long term contracts under conditions in which transportation terms can change during the period covered by the contract. Another marketer noted that in most contracts between marketers and producers, transportation risks are shared.

7. Several gas marketers at the workshop wanted to see the transportation burden shifted onto MMS or the producer. A workshop participant noted that a solution would be to allow the purchaser to net out actual costs to the index point. A marketer advanced the notion that MMS needs to specify that costs from the wellhead to market are the producers' and MMS' responsibility and suggested that MMS should allow credits or refunds. In other words, the purchasers should be allowed to deduct costs.

8. Several participants in the workshops recognized that there would be a downside to allowing the marketers to bid a price that would be net of actual transportation costs. A workshop participant noted that if MMS moved the delivery points downstream, cash reimbursements would be necessary. A deduction would also necessitate an audit function and in some cases, litigation. One workshop participant stated that having auditors in the marketing companies is a ''show stopper.'' Some thought that a better option could be found in a provision in the sales contract for bi-lateral renegotiations in the event of material changes. Another thought that quarterly sealed-bid auctions of RIK gas may be a solution.

9. Other marketers saw the transportation cost and uncertainty in much less critical terms and recommended solutions that would not involve shifting costs and risk. One gas marketer suggested that much of the problem could be alleviated if producers would guarantee access and agree to charges in advance. Another gas marketer suggested that one way to deal with the lateral line issue is to publish a flat rate that MMS would allow for the charges incurred for the use of lateral pipelines, and then let the purchasers negotiate with producers. A marketer participating in the pilot stated that it had no problem negotiating rates for lateral lines when it called the producers. One marketer added that the best solution is to keep the lines of communication open and to negotiate reasonable rates. Another marketer asserted that all the risks involved in buying RIK gas can be managed by marketers in their bids, if they are diligent.

10. Other marketers emphasized that part of the solution to the issue of transportation risk can be found in allowing purchasers greater periods of time in which to prepare bids. The view was expressed that MMS should not focus on wellhead problems; MMS should allow the marketers to deal with these matters as they would for any other wellhead sale. The key is to allow enough time in the bidding process. A marketer noted that allowing more time to respond to bids would reduce the likelihood of bidder mistakes.

The ''Must Take'' Requirement, Gas Balancing and Gas Volume Control

1. The current pilot obligates the purchaser to take 100 percent of the gas made available by the producer at the take point. Marketers and producers have sharply differing perspectives regarding the ''must take'' provision of the RIK gas contract. In general, producers insist that this feature be included in any future pilot and also in the implementation of a permanent program of taking royalties in-kind. Producers attending the workshops pointed out that marketers should prepare their bids with a full understanding of their obligation with respect to the ''must take'' provision of the contract.

2. In commenting on production uncertainty, one marketer noted that the IFB needs to be explicit about the fact that volumes can fluctuate; in fact, volumes can increase as well as decrease, and both situations may cause problems. Shut-ins are also possible. Another marketer observed that in light of production uncertainty, the must-take provision is too burdensome to the purchaser. Marketers must factor into their bids the additional risk associated with the must-take provision. If producers exercise this right with no flexibility, MMS will suffer a revenue

loss as bids are adjusted to reflect the greater volume risk.

3. Specific procedures were suggested to deal with significant variations in production. For example, the lessee could be required to give the purchaser 60 days notice if prospective production increases were to exceed a pre-specified amount for reasons related to reworking of wells or development of new wells. Also a provision could be introduced which would give the contractor the right of first refusal for the increased volumes at the contract price. If refused, the RIK gas would be re-auctioned. Another alternative to address fluctuations would involve the introduction of a ''change of conditions'' clause in the MMS contract with the marketer. The clause would allow for renegotiation of the contract if volumes or other conditions change significantly.

4. A workshop participant noted that a royalty owner naturally will receive a lower value for gas than would a working interest owner because the royalty owner has no control over production. The suggestion was made that MMS enter into Joint Operating Agreements, with balancing arrangements, and act as a working interest owner. The only difference would be that MMS would not incur any operating costs. Someone responded by noting that the idea was not feasible because the lessor has leased away its right to control production and cannot be involved in operations or operating decisions. Also, the lessor cannot leave the royalty share of production in the ground and cannot share in the costs of production.

5. The volume uncertainty faced by the purchasers prompted some to suggest that MMS consider alternative means to warrant volumes of gas in light of the fact that MMS has no control over production. One gas marketer noted that MMS could guarantee volumes if it were to incur the costs of aggregating and storing RIK gas. Even if volumes were not warranted, MMS could reduce risk to the purchaser by bearing some costs of pooling and aggregation.

6. Several producers raised the issue of processing contracts and the impact of losing the one-sixth of production through the taking of RIK gas. Plant Processing Agreements expose the participating lessees to potential penalties and residual liability problems. The penalties and liabilities for producers can arise if, over a period of time, one-sixth of the production stream is diverted and taken as RIK gas. One producer noted that under an involuntary RIK scenario, the loss of control of one-sixth of production could be a significant problem. Several producers stated that their processing problems were relatively minor; one producer indicated that these problems would disappear if greater numbers of producers were paying gas royalties on an in-kind basis. Most plant owners would be forced to adapt processing plant accounting procedures to accommodate the new royalty collection procedures.

7. In some cases, purchasers would need to explore the possibility of participating in existing gas processing arrangements. The processing of RIK gas means that there is a potential increase in bids because a producer would have an added incentive to retain its one-sixth share. But this uplift could be reduced by potential problems encountered by non-lessee bidders in making processing arrangements. This potential difficulty may dissuade prospective purchasers from bidding on RIK gas. However, one marketer expressed the view that entering existing processing arrangements would not be a problem; marketers can probably get access to plants. Someone suggested that the IFB indicate that the gas production stream from the lease is committed to processing. The suggestion was also made that for RIK gas which would otherwise be committed to processing, MMS may want to specify in the IFB a requirement that bidders provide documentation of processing arrangements.

8. One solution offered to deal with existing gas processing arrangements would allow producers the option of buying back their royalty gas at the highest bid price. This option would enable producers to maintain control over six-sixths of the volume. However, a marketer stated that doing so would probably reduce the number of bids. Marketers do not want to go through the effort of researching bids only to have the producers take back the gas.

9. Several workshop participants expressed the view that problems associated with volume uncertainty and control can be rectified by including the necessary information in the IFB and allowing a substantially longer period between the issuance of the IFB and the deadline for bid submission.

Communications Between Lessee and Marketer

1. In major part, the initial communication between the winning bidders (purchasers) and the producers was poor. Few marketers called to inquire about the gas and lateral pipelines needed to transport the gas. Marketers needed to know about gathering systems and charges for laterals. Since producers did not want the marketers to have problems, producers found it was necessary to initiate discussions in order to arrange delivery and lateral transportation. In part, the MMS may have contributed to this lack of communication by failing to include in the IFB (which became the contract), the name of the producer's designated liaison along with the telephone number.

2. One producer made the point that communication will almost certainly be better in future pilots. Marketers will be more alert to their own responsibilities in making appropriate transportation arrangements.

Contract Terms and Sealed-Bid Auction Procedures

1. Questions were asked and suggestions offered concerning additional information which should be included in the IFB. For example, the suggestion was made that the IFB should give meter numbers and exact locations of the FMP or take point. Information on gas flow, Btu content, and non-jurisdictional or lateral pipelines should be included.

2. Questions were posed concerning the absence of meter number information and the designation of the FMP as the ''take point'' for the RIK gas. The MMS representative from the Gulf of Mexico Regional Office explained that the FMP number identifies a measuring station for the facility; it does not change. Meter numbers can change and thus were not used. The view was expressed that future IFB's need to be more explicit concerning gas purchaser's responsibility with respect to transportation. Also, an explicit statement must be included in the IFB indicating the policy with respect to transportation allowances.

3. Some discussion focused on alternative prices which could be used as a basis of bid formulation. One panelist stated that he prefers the use of published price indices, and that MMS should have the applicable producer recommend the index for each lease. Another panelist expressed concern over the volatility of price indices and suggested that MMS consider fixed price contracts, a mix of pricing methods, or the use of different methods for different bids groups. One workshop participant stated that MMS would obtain the highest price if it were able to specify one correct index. The point was made that a sound guide in determining the correct price index is to follow the flow of gas through the appropriate pipeline.

4. A marketer noted that the use of the New York Mercantile Exchange (NYMEX) futures price could be a

problem onshore, because there is volatility of local price indices relative to NYMEX price in some areas. The price indices which appear in Inside FERC, Natural Gas Intelligence, and other publications indicate market value much closer to the lease, but still involve some risk related to upstream transportation costs.

5. Suggestions were offered to deal with situations in which several different price indices can be considered correct. Someone suggested that MMS explicitly offer bidders a choice of price indices, specifying in advance the procedure to be used by MMS in evaluating the differentials between the indices. But this idea was contested by the observation that if MMS offers a choice, people will try to use changes in the differentials to minimize payments to MMS. The creation of a ''basket'' or average index was also suggested for those situations in which several indices may work equally well. However, this suggestion was met with skepticism and the observation that one appropriate index would serve better as a basis bid formulation.

6. Several comments were offered on the size of gas royalty production packages to be offered in future RIK auctions. Several workshop participants observed that if MMS were to offer increased bid volumes (in groups), the packages of RIK gas would be made more attractive and would lower the per-unit risk to the purchaser. This approach could alleviate the volume warranty problem mentioned above. Several workshop participants suggested that the packages offered in future RIK pilots should be at least 2–3 MMcf (million cubic feet) per day, and preferably 5 to 10 MMcf per day. Typical volumes in the Outer Continental Shelf gas spot market range from 5 to 10 MMcf per day. A marketer added that all RIK gas in a package should flow into one price index point.

7. The subject of aggregation prompted some discussion of the alternate bid procedure made available to bidders in the current pilot. The alternate bid procedure allowed bids on self selected aggregations of groups. The bids would have taken the form of an ''across the board'' adjustment to the applicable price indices for the respective groups. Such bids would win the gas in the aggregation if the alternate bid were to exceed the total value of the highest individual bids or next highest alternate bid for any of the groups in the aggregation. The MMS was surprised by the apparent lack of interest in the alternate bid procedure. Marketers explained this lack of interest by noting the variation in lateral pipeline rates and costs over different fields. These differences between gas fields in the Gulf of Mexico dissuaded prospective bidders from applying an ''across the board'' adjustment to indices in the formulation of bids.

8. Marketers expressed an interest in an option that would allow prospective bidders to put together their own aggregations and allow differential bids (adjustments to the applicable index) for gas from different leases. The problem of bid ranking faced by MMS was noted with respect to this option.

9. Some marketers thought the financial qualification criteria for bidders were restrictive for small companies. One marketer observed that perhaps MMS could offer companies the option of providing letters of credit. Of course, this would be an added cost, unless the letter of credit was backed with an interest-bearing cash deposit. The suggestion was also made that the letter of credit need not cover the entire period of the contract. A letter of credit could cover a shorter period during which MMS is actually at risk. Another commenter stated that prior business experience was not necessarily a good indicator of credit worthiness, and that a better option would be to require all bidders to post a bond. Other comments included the suggestion that MMS require an escrow account and the proposal that factors other than prior business experience be used as a criterion in establishing credit worthiness; the assets held by the company would be one such example. One commenter stated that, regardless of the method selected, the requirements should be the same for all bidders.

Views on Future Pilot Expansion and RIK Efforts

1. Some workshop participants suggested MMS form a study group of current pilot participants to design the next pilot or program.

2. Several workshop participants suggested that MMS become more involved in the marketing of the gas. The point was made that because of the potentially large volume of RIK gas, MMS can enhance its revenues by pooling and aggregation. One marketer said the MMS should forget about its aversion to getting into the market place. The MMS has shown the ability to learn concepts and practices; why wouldn't MMS be able to gain expertise in gas marketing? If MMS were to market its gas, it could realize maximum value. Another marketer observed that MMS should learn to market gas, or hire someone to market its gas, if it wants to receive highest value. However, one participant noted that MMS would increase its administrative costs if it were to become more involved in the marketing of in-kind royalty gas.

3. Several producers suggested that future RIK regulations and procedures should be based on the Volunteer Agreement between MMS and participating lessees, as employed in the current pilot.

4. Strong support was voiced for an expanded pilot in the Gulf of Mexico, regardless of results obtained in the current pilot. A larger pilot, incorporating lessons learned from the current pilot would provide needed data.

5. Workshop participants voiced a diversity of opinions concerning the time of year in which to commence a another pilot. However, a consensus seemed to hold the view that a pilot should commence in one of the summer months. The program should be in place when companies are making arrangements for the winter season.

6. Several comments were offered concerning the administrative savings that MMS is likely to realize with RIK procedures. For example, the point was made that a full scale implementation of RIK would be necessary for MMS to realize major administrative savings. Partial implementation would require MMS to maintain an audit, valuation, reporting infrastructure for the royalties being paid in value. Also, full scale implementation would reduce problems created for lessees and operators by having some lessees paying royalties in value and others paying royalties in kind.

7. Support was expressed for an ''evergreen option'' in the awarding of gas marketing contracts. This option would involve a routine renewal of contracts. Such an option would be feasible under Federal contracting procedures if the renewal provision were pre-specified for a fixed number of years.

8. Some discussion focused on complications which may be encountered in expanding the pilot to onshore gas royalties. For example, one workshop participant noted that onshore gathering costs may be a problem because third parties may not have any rights to transport gas upstream of plants. Higher costs may also arise in the San Juan basin, in part, because of the prevalent use of stainless steel pipelines.

9. The possibility of an oil RIK pilot was discussed. Much of the interest in such a pilot seemed to come from those participating in the current oil RIK program. The current oil RIK program is

very unpopular among lessees; many at the workshops suggested that the current oil RIK program be replaced with a program designed along the lines of the current gas RIK pilot. Note was taken of the fact that the latter step could only be taken if the Secretary of the Interior were to make a determination that small refineries in the selected area have access to adequate supplies of crude oil at ''reasonable prices.''

FOR FURTHER INFORMATION CONTACT: Mr. Hugh Hilliard, Minerals Management Service, Mail Stop 4013, 1849 C Street, NW., Washington, DC 20240, telephone number (202) 208–3398; or contact Mr. James McNamee, Minerals Management Service, 12600 West Colfax, Lakewood, Colorado 80215, telephone number (303) 275–7126.

Date: October 25, 1995.

Lucy R. Querques,

Associate Director for Policy and Management Improvement.

[FR Doc. 95–27078 Filed 10–31–95; 8:45 am]

BILLING CODE 4310–MR–P

INTERNATIONAL TRADE COMMISSION

[Investigation No. 337–TA–373]

Certain Low-Power Computer Hard Disk Drive Systems and Products Containing Same; Notice of Commission Determination Not To Review an Initial Determination Terminating the Investigation on the Basis of a Settlement Agreement

AGENCY: U.S. International Trade Commission.

ACTION: Notice.

SUMMARY: Notice is hereby given that the U.S. International Trade Commission has determined not to review the presiding administrative law judge's (ALJ's) initial determination (ID) in the above-captioned investigation terminating the investigation on the basis of a settlement agreement.

FOR FURTHER INFORMATION CONTACT: Tim Yaworski, Esq., Office of the General Counsel, U. S. International Trade Commission, telephone 202–205–3096.

SUPPLEMENTARY INFORMATION: On April 4, 1995, Conner Peripherals, Inc. of San Jose, California filed a complaint with the Commission alleging violation of section 337 of the Tariff Act of 1930 in the importation into the United States, the sale for importation, and the sale within the United States after importation of certain low-power computer hard disk drive systems and products containing same that infringe certain claims of a U.S. patent owned by complainant.

The Commission instituted an investigation of the complaint, and published a notice of investigation in the Federal Register on May 10, 1995. 60 FR 24885. The notice named International Business Machines Corporation of Armonk, New York as respondent.

On September 8, 1995, complainant and respondent filed a joint motion to terminate the investigation on the basis of a settlement agreement. The joint motion was supported by the Commission investigative attorney. On October 10, 1995, the presiding ALJ issued an ID (Order No. 9) granting the joint motion to terminate the investigation on the basis of the settlement agreement. No petitions for review of the ID were received.

This action is taken under the authority of section 337 of the Tariff Act of 1930, 19 U.S.C. § 1337, and Commission rule 210.42, 19 C.F.R. 210.42.

Copies of the ALJ's ID, and all other nonconfidential documents filed in connection with this investigation, are or will be available for inspection during official business hours (8:45 a.m. to 5:15 p.m.) in the Office of the Secretary, U.S. International Trade Commission, 500 E Street, S.W., Washington, D.C. 20436, telephone 202–205–2000. Hearing-impaired persons are advised that information on this matter can be obtained by contacting the Commission's TDD terminal on 202–205–1810.

By order of the Commission.

Issued: October 25, 1995.

Donna R. Koehnke,

Secretary.

[FR Doc. 95–27080 Filed 10–31–95; 8:45 am]

BILLING CODE 7020–02–P

[Inv. No. 731–TA–724 (Final)]

In the Matter of: Manganese Metal From the People's Republic of China; Notice of Commission Determination To Conduct a Portion of the Hearing in Camera

AGENCY: U.S. International Trade Commission.

ACTION: Closure of a portion of a Commission hearing to the public.

SUMMARY: Upon request of petitioners Elkem Metals Co. and Kerr-McGee Chemical Corp. in the above-captioned final investigation, the Commission has unanimously determined to conduct a portion of its hearing scheduled for November 1, 1995, *in camera. See* Commission rules 207.23(d), 201.13(m) and 201.35(b)(3) (19 CFR §§ 207.23(d), 201.13(m) and 201.35(b)(3)). The remainder of the hearing will be open to the public. The Commission unanimously has determined that the seven-day advance notice of the change to a meeting was not possible. *See* Commission rule 201.35 (a), (c)(1) (19 CFR § 201.35 (a), (c)(1)).

FOR FURTHER INFORMATION CONTACT: Marc A. Bernstein, Office of General Counsel, U.S. International Trade Commission, 500 E Street, SW., Washington, DC 20436, telephone 202–205–3087. Hearing-impaired individuals are advised that information on this matter may be obtained by contacting the Commission's TDD terminal on 202–205–1810.

SUPPLEMENTARY INFORMATION: The Commission believes that petitioners have justified the need for a closed session, but only with respect to discussion of information concerning the domestic industry. A full discussion of competition in the industry and the domestic industry's financial condition can only occur if a portion of the hearing is held *in camera.* Because certain information is not publicly available, any discussion of issues relating to this information will necessitate disclosure of business proprietary information (BPI). Thus, such discussions can only occur if a portion of the hearing is held *in camera.* In making this decision, the Commission nevertheless reaffirms its belief that whenever possible its business should be conducted in public.

The hearing will include the usual public presentations by petitioners and by respondents, with questions from the Commission. In addition, the hearing will include an *in camera* session for a presentation by petitioners that discusses BPI and for questions from the Commission relating to the BPI, followed by a similar *in camera* presentation by respondents. For any *in camera* session the room will be cleared of all persons except those who have been granted access to BPI under a Commission administrative protective order (APO) and are included on the Commission's APO service list in this investigation. *See* 19 CFR § 201.35(b)(1), (2). The time for the parties' presentations and rebuttals in the *in camera* session will be taken from their respective overall allotments for the hearing. All persons planning to attend the *in camera* portions of the hearing should be prepared to present proper identification.

Authority: The General Counsel has certified, pursuant to Commission Rule

201.39 (19 CFR 201.39) that, in her opinion, a portion of the Commission's hearing in Manganese Metal from the People's Republic of China, Inv. No. 731–TA–724 (Final) may be closed to the public to prevent the disclosure of BPI.

By order of the Commission.

Issued: October 30, 1995.

Donna R. Koehnke,

Secretary.

[FR Doc. 95–27235 Filed 10–31–95; 8:45 am]

BILLING CODE 7020–02–P

INTERSTATE COMMERCE COMMISSION

[Ex Parte No. MC–5 (Sub-No. 12)]

Procedural Change in Authority Revocation Process

AGENCY: Interstate Commerce Commission.

ACTION: Notice; suspension of effective date.

SUMMARY: The purpose of this Notice is to address the written comments filed in this proceeding, and to suspend the effective date for implementation of the changes in the Commission's internal procedures for revocation of operating authority based upon noncompliance with the financial security provisions of 49 U.S.C. 10927 and 49 CFR 1043.

EFFECTIVE DATE: The revised internal procedures announced here will apply to insurance, surety bond and trust fund notices of cancellation filed on or after November 1, 1995. The earlier-announced effective date of October 15, 1995, has been suspended until November 1, 1995.

FOR FURTHER INFORMATION CONTACT: Dixie E. Horton, (202) 927–5520 or Patricia A. Burke, (202) 927–5520. [TDD for the hearing impaired: (202) 927–5721.]

SUPPLEMENTARY INFORMATION: In a Notice served September 29, 1995, and published in the Federal Register at 60 FR 50645, we announced revised internal procedures for revocation of operating authority based upon noncompliance with the financial security provisions of 49 U.S.C. 10927 and 49 CFR 1043. Under the new procedures, as soon as the Commission receives notice that a carrier's insurance is to be canceled, the Commission will serve an order giving the carrier 30 days in which to obtain insurance, or its authority will be revoked. The public was invited to comment, and the effective date of the change was to be October 15, 1995.

Comments were filed by four parties: the American Insurance Association, the American Movers Conference, the American Trucking Associations and the Regular Common Carrier Conference (RCCC). In general, the commenters support our changes and recognize the need for a shorter revocation period. Some commenters, however, have raised certain reservations about our revised procedures, which we will address.

In particular, some commenters express concern about a carrier's ability to achieve compliance within the 30-day period after it is notified that its insurance is about to lapse, or the Commission's ability to process filings in a timely manner. We recognize that our new procedure increases the responsibility of the authority holder and its security holder to comply in a timely manner, and that it also heightens the responsibility of the Commission to process all filings efficiently. The 30-day period, however, does not begin to run until the agency has received an insurer's notice of cancellation, has entered it into the computer system, and has served the order notifying the carrier of its impending noncompliance. Thus, the carrier will in fact have more than 30 days in which to achieve compliance prior to any actual revocation of authority. Given the public interest in keeping uninsured carriers off the roads, we believe that the revised procedures provide sufficient time for carriers to achieve compliance. We note that carriers may expedite their compliance by having their insurance companies use the new option of filing evidence of insurance and other financial security electronically.

The RCCC recommends that we modify the current 30-day notice period of 49 CFR 1043.7(d), to require insurance carriers to give 60-days notice of cancellation to the agency, in order to provide more time in which motor carriers can perfect their new insurance filings. We see no need to put the burden of carrier noncompliance on the insurance industry. As we have noted, carriers should be able to remain in compliance with the law, even with the current 30-day notification requirement. We will, however, monitor the new procedures and will be open to requests for further modification should it be warranted. An efficient and fair revocation process, which will require due diligence on the part of all involved, will be beneficial to the motor carrier industry and the public.

Because the replacement of the 4-document, 120-day process with the 2-document, 30-day process requires modification to the Commission's computer system, which has not yet been completed, we will suspend the effective date of the new changes until November 1, 1995.

Environmental Statement

This action will not significantly affect either the quality of the human environment or the conservation of energy resources.

Authority: 49 U.S.C. 10925 and 10927; 49 CFR 1043 and 1084.

Decided: October 26, 1995.

By the Commission, Chairman Morgan, Vice Chairman Owen, and Commissioner Simmons.

Vernon A. Williams,

Secretary.

[FR Doc. 95–27136 Filed 10–31–95; 8:45 am]

BILLING CODE 7035–01–P

[Finance Docket No. 32791]

Rio Valley Railroad, Inc. and Rio Valley Switching Company—Trackage Rights Exemption—Missouri Pacific Railroad Company

Missouri Pacific Railroad Company (MP) has agreed to grant overhead trackage rights to Rio Valley Railroad, Inc. (RVRI), over 8.11-miles of rail line between milepost 27.50 near Harlingen and milepost 19.39 near San Benito, in Cameron County, TX. RVRI currently leases 49.12 miles of rail line from MP, between Harlingen and Mission, TX, and between Mission and Hidalgo, TX.[1] Rio Valley Switching Company (RVSC) operates that line pursuant to an agreement with RVRI.[2] By decision served September 20, 1995, the Commission exempted under 49 U.S.C. 10505 RVRI's acquisition and RVSC's operation of 9.124 miles of MP's rail line between Rio Hondo and San Benito, also in Cameron County, from the prior approval requirements of 49 U.S.C. 11343–45.[3] The trackage rights were to become effective on or after October 20, 1995, the expected consummation date for RVRI's acquisition of the Rio Hondo to San Benito line.

RVRI will acquire and hold the trackage rights. RVSC will operate over the line pursuant to an agreement with RVRI. The trackage rights will permit

[1] *See Rio Valley Railroad, Inc.—Lease and Operation Exemption—Missouri Pacific Railroad Company*, Finance Docket No. 32261 (ICC served Mar. 17, 1993).

[2] *See Rio Valley Switching Company—Operation Exemption—Rio Valley Railroad, Inc.*, Finance Docket No. 32554 (ICC served Sept. 22, 1994).

[3] *See Rio Valley Railroad Inc. and Rio Valley Switching Company—Acquisition and Operation Exemption—Certain Lines of Missouri Pacific Railroad Company in Cameron County, TX*, Finance Docket No. 32678 (ICC served Sept. 20, 1995).

connecting operations between the line RVRI leases from MP and the line RVRI is acquiring from MP.

This notice is filed under 49 CFR 1180.2(d)(7). If the notice contains false or misleading information, the exemption is void *ab initio.* Petitions to revoke the exemption under 49 U.S.C. 10505(d) may be filed at any time. The filing of a petition to revoke will not stay the transaction. Pleadings must be filed with the Commission and served on: Thomas F. McFarland, Jr., Belnap, Spencer, McFarland & Herman, 20 North Wacker Drive, Suite 3118, Chicago, IL 60606–3101.

As a condition to use of this exemption, any employees adversely affected by the trackage rights will be protected under *Norfolk and Western Ry. Co.—Trackage Rights—BN,* 354 I.C.C. 605 (1978), as modified in *Mendocino Coast Ry., Inc.—Lease and Operate,* 360 I.C.C. 653 (1980).

Decided: October 25, 1995.

By the Commission, Joseph H. Dettmar, Acting Director, Office of Proceedings.

Vernon A. Williams

Secretary.

[FR Doc. 95–27139 Filed 10–31–95; 8:45 am]

BILLING CODE 7035–01–P

[Docket No. AB–433 (Sub-No. 2X)]

Idaho Northern & Pacific Railroad Company—Abandonment Exemption—in Washington and Adams Counties, ID

AGENCY: Interstate Commerce Commission.

ACTION: Notice of exemption.

SUMMARY: Under 49 U.S.C. 10505, the Commission exempts Idaho Northern & Pacific Railroad Company from the prior approval requirements of 49 U.S.C. 10903–04 to: (1) Abandon approximately 83.1 miles of rail line between milepost 1.0 near Weiser and milepost 84.1 at Rubicon, in Washington and Adams Counties, ID; and (2) discontinue trackage rights over a line currently owned and operated by Union Pacific Railroad Company between milepost 0.0 and milepost 1.0 in Weiser, ID. The exemption will be subject to environmental, public use, and standard labor protective conditions.

DATES: The exemption will be effective on December 1, 1995. Formal expressions of intent to file an offer [1] of financial assistance under 49 CFR 1152.27(c)(2) and requests for NITU/rail banking under 49 CFR 1152.29 must be filed by November 13, 1995. Petitions to stay must be filed by November 16, 1995. Requests for a public use condition must be filed by November 21, 1995. Petitions to reopen must be filed by November 27, 1995.

ADDRESSES: An original and 10 copies of all pleadings, referring to Docket No. AB–433 (Sub-No. 2X), must be filed with: (1) The Office of the Secretary, Case Control Branch, Interstate Commerce Commission, 1201 Constitution Avenue, NW., Washington, DC 20423; and (2) Petitioner's representative: Robert A. Wimbish, REA, CROSS & AUCHINCLOSS, 1920 N St., NW., Washington, DC 20036.

FOR FURTHER INFORMATION CONTACT: Joseph H. Dettmar, (202) 927–5660. [TDD for the hearing impaired: (202) 927–5721.]

SUPPLEMENTARY INFORMATION: Additional information is contained in the Commission's decision. To purchase a copy of the decision, write to, call, or pick up in person from DC News & Data, Inc., Interstate Commerce Commission Building, 1201 Constitution Avenue, N.W., Room 2229, Washington, DC 20423. Telephone: (202) 289–4357/4359. [Assistance for the hearing impaired is available through TDD Services at (202) 927–5721.]

Decided: October 23, 1995.

By the Commission, Chairman Morgan, Vice Chairman Owen, and Commissioners Simmons and McDonald. Commissioner McDonald did not participate in the disposition of this proceeding.

Vernon A. Williams,

Secretary.

[FR Doc. 95–27140 Filed 10–31–95; 8:45 am]

BILLING CODE 7035–01–P

[Docket No. AB–310X]

Utah Railway Company—Abandonment Exemption—in Carbon County, UT

Utah Railway Company (UTAH) has filed a notice of exemption under 49 CFR 1152 Subpart F—*Exempt Abandonments* to abandon approximately 3.6 miles of rail line between milepost 0.0 at Jacobs and milepost 3.6 at Spring Canyon, in Carbon County, UT.[1]

UTAH has certified that: (1) No local traffic has moved over the line for at least 2 years; (2) no overhead traffic moves over the line; (3) no formal complaint filed by a user of rail service on the line (or a State or local government entity acting on behalf of such user) regarding cessation of service over the line either is pending with the Commission or with any U.S. District Court or has been decided in favor of the complainant within the 2-year period; and (4) the requirements at 49 CFR 1105.7 (service of environmental report on agencies), 49 CFR 1105.8 (service of historic report on State Historic Preservation Officer), and 49 CFR 1152.50(d)(1) (service of verified notice on governmental agencies) have been met.

As a condition to use of this exemption, any employee affected by the abandonment shall be protected under *Oregon Short Line R. Co.—Abandonment—Goshen,* 360 I.C.C. 91 (1979). To address whether this condition adequately protects affected employees, a petition for partial revocation under 49 U.S.C. 10505(d) must be filed.

Provided no formal expression of intent to file an offer of financial assistance has been received, this exemption will be effective on December 1, 1995 (unless stayed pending reconsideration). Petitions to stay that do not involve environmental issues,[2] formal expressions of intent to file offers of financial assistance under 49 CFR 1152.27(c)(2),[3] and trail use/rail banking statements under 49 CFR 1152.29 must be filed by November 13, 1995.[4] Petitions to reopen or requests for public use conditions under 49 CFR 1152.28 must be filed by November 21, 1995, with: Office of the Secretary, Case Control Branch, Interstate Commerce Commission, Washington, DC 20423.

A copy of any petition filed with the Commission should be sent to applicant's representative: J. E. West, III, Utah Railway Company, 340 Hardscrabble Road, P. O. Box 261, Helper, UT 84526.

---

[1] *See Exempt. of Rail Abandonment—Offers of Finan. Assist.,* 4 I.C.C.2d 164 (1987).

[1] Pursuant to 49 CFR 1152.50(d)(2), the railroad must file a verified notice with the Commission at least 50 days before the abandonment or discontinuance is to be consummated. The applicant, in its verified notice, indicated a proposed consummation date of November 30, 1995. Because the verified notice was not filed until October 12, 1995, consummation should not have been proposed to take place before December 1, 1995. Applicant's representative has corrected the notice to state that the proposed consummation date is December 1, 1995.

[2] A stay will be issued routinely where an informed decision on environmental issues (whether raised by a party or by the Commission's Section of Environmental Analysis in its independent investigation) cannot be made prior to the effective date of the notice of exemption. *See Exemption of Out-of-Service Rail Lines,* 5 I.C.C.2d 377 (1989). Any entity seeking a stay on environmental grounds is encouraged to file promptly so that the Commission may act on the request before the effective date.

[3] *See Exempt. of Rail Abandonment—Offers of Finan. Assist.,* 4 I.C.C.2d 164 (1987).

[4] The Commission will accept late-filed trail use statements so long as it retains jurisdiction.

If the notice of exemption contains false or misleading information, use of the exemption is void *ab initio.*

UTAH has filed an environmental report which addresses the abandonment's effects, if any, on the environment or historic resources. The Section of Environmental Analysis (SEA) will issue an environmental assessment (EA) by November 6, 1995. Interested persons may obtain a copy of the EA from SEA by writing to it at (Room 3219, Interstate Commerce Commission, Washington, DC 20423) or by calling Elaine Kaiser, Chief, SEA at (202) 927–6248. Comments on environmental and historic preservation matters must be filed within 15 days after the EA becomes available to the public.

Environmental, historic preservation, public use, or trail use/rail banking conditions will be imposed, where appropriate, in a subsequent decision.

Decided: October 26, 1995.

By the Commission, Joseph H. Dettmar, Acting Director, Office of Proceedings.

Vernon A. Williams,

Secretary.

[FR Doc. 95–27137 Filed 10–31–95; 8:45 am]

BILLING CODE 7035–01–P

[Docket No. AB–310 (Sub-No. 1X)]

Utah Railway Company—Abandonment Exemption—in Carbon County, UT

Utah Railway Company (Utah) has filed a notice of exemption under 49 CFR 1152 Subpart F—*Exempt Abandonments* to abandon its Wattis Branch Line from milepost 0.0 to milepost 2.4, in Carbon County, UT, a distance of 2.4 miles.[1]

Utah has certified that: (1) no local traffic has moved over the line for at least 2 years; (2) there is no overhead traffic; (3) no formal complaint filed by a user of rail service on the line (or by a State or local government entity acting on behalf of such user) regarding cessation of service over the line either is pending with the Commission or with any U.S. District Court or has been decided in favor of the complainant within the 2-year period; and (4) the requirements at 49 CFR 1105.7 (environmental reports), 49 CFR 1105.8 (historic reports), 49 CFR 1105.11 (transmittal letter), 49 CFR 1105.12 (newspaper publication), and 49 CFR 1152.50(d)(1) (notice to governmental agencies) have been met.

As a condition to use of this exemption, any employee adversely affected by the abandonment shall be protected under *Oregon Short Line R. Co.—Abandonment—Goshen,* 360 I.C.C. 91 (1979). To address whether this condition adequately protects affected employees, a petition for partial revocation under 49 U.S.C. 10505(d) must be filed.

Provided no formal expression of intent to file an offer of financial assistance (OFA) has been received, this exemption will be effective on December 1, 1995, unless stayed pending reconsideration. Petitions to stay that do not involve environmental issues,[2] formal expressions of intent to file an OFA under 49 CFR 1152.27(c)(2),[3] and trail use/rail banking requests under 49 CFR 1152.29[4] must be filed by November 13, 1995. Petitions to reopen or requests for public use conditions under 49 CFR 1152.28 must be filed by November 21, 1995, with: Office of the Secretary, Case Control Branch, Interstate Commerce Commission, Washington, DC 20423.

A copy of any pleading filed with the Commission should be sent to applicant's representative: J. E. West, III, 340 Hardscrabble Road, P.O. Box 261, Helper, UT 84526.

If the notice of exemption contains false or misleading information, the exemption is void *ab initio.*

Utah filed an environmental report which addresses the effects of the abandonment, if any, on the environment and historic resources. The Commission's Section of Environmental Analysis (SEA) will issue an environmental assessment (EA) by November 6, 1995. Interested persons may obtain a copy of the EA by writing to SEA (Room 3219, Interstate Commerce Commission, Washington, DC 20423) or by calling Elaine Kaiser, Chief of SEA, at (202) 927–6248. Comments on environmental and historic preservation matters must be filed within 15 days after the EA becomes available to the public.

Environmental, historic preservation, public use, or trail use/rail banking conditions will be imposed, where appropriate, in a subsequent decision.

Decided: October 26, 1995.

By the Commission, Joseph H. Dettmar, Acting Director, Office of Proceedings.

Vernon A. Williams,

Secretary.

[FR Doc. 95–27135 Filed 10–31–95; 8:45 am]

BILLING CODE 7035–01–P

---

[1] Pursuant to 49 CFR 1152.50(d)(2), the railroad must file a verified notice with the Commission at least 50 days before the abandonment or discontinuance is to be consummated. The applicant, in its verified notice, indicated a proposed consummation date of November 30, 1995. Because the verified notice was not filed until October 12, 1995, consummation should not have been proposed to take place before December 1, 1995. Applicant's representative has corrected the notice on October 20, 1995, and stated that the proposed consummation date is December 1, 1995.

[2] A stay will be issued routinely by the Commission in those proceedings where an informed decision on environmental issues (whether raised by a party or by the Commission's Section of Environmental Analysis in its independent investigation) cannot be made prior to the effective date of the notice of exemption. *See Exemption of Out-of-Service Rail Lines,* 5 I.C.C.2d 377 (1989). Any entity seeking a stay on environmental concerns is encouraged to file its request as soon as possible in order to permit the Commission to review and act on the request prior to the effective date of this exemption.

[3] *See Exempt. of Rail Abandonment Offers of Finan. Assist.,* 4 I.C.C.2d 164 (1987).

[4] The Commission will accept a late-filed trail use request as long as it retains jurisdiction to do so.

DEPARTMENT OF JUSTICE

Information Collection Under Review

The proposed information collection is published to obtain comments from the public. Public comments are encouraged and will be accepted for sixty days from the date listed at the top of this page in the Federal Register. This process is conducted in accordance with the Paperwork Reduction Act of 1995.

This collection will contain the following information:

(1) The title of the form/collection;

(2) The agency form number, if any, and the applicable component of the Department sponsoring the collection;

(3) Who will be asked or required to respond, as well as a brief abstract;

(4) An estimate of the total number of respondents and the amount of time estimated for an average respondent to respond; and,

(5) An estimate of the total public burden (in hours) associated with the collection.

Comments and/or suggestions regarding the item(s) contained in this notice, especially regarding the estimated public burden and associated response time, should be directed to Ms. Jill Ptacek, Antitrust Coordinator, Antitrust Division on 202–307–7284, and Mr. Robert B. Briggs, the Department of Justice's Clearance Officer who can be contacted at 202–514–4319. If you anticipate commenting on a form or collection, but find that time to prepared such comments will prevent you from prompt submission, you should notify the Office of Justice Programs and the Department of Justice Clearance Officer of you intent as soon as possible. Written comments regarding the burden estimate or any other aspect of the information collection may be submitted to:

Ms. Jill Ptacek, Antitrust Division, Transportation/Energy/Agriculture Section (Room 9804), 555 Fourth Street, NW, Washington, DC 20001
or
Mr. Robert B. Briggs, Systems Policy Staff, JMD, Suite 850, Washington Center, 1001 G Street, NW, Washington, DC 20531

Extension of a Currently Approved Collection

(1) Department of Justice Federal Coal Lease Review Information
(2) Forms: ATR–139, ATR–140. Antitrust Division, United States Department of Justice.
(3) Primary: Business or other-for-profit. Other: None. The Department of Justice evaluates the competitive impact of issuances, transfers and exchange of federal coal leases. These forms seek information regarding a prospective coal lessee's coal reserves and the reserves subject to the federal lease. The Department of Justice uses this information to determine whether the lease transfer is consistent with the Antitrust Laws.
(4) 20 responses per year at 2 hours per response.
(5) 40 annual burden hours.
Public comment on this proposed information collection is strongly encouraged.

Dated: October 27, 1995.

Robert B. Briggs,

Department Clearance Officer, United States Department of Justice.

[FR Doc. 95–27118 Filed 10–31–95; 8:45 am]

BILLING CODE 4410–01–M

Information Collection Under Review

The proposed information collection is published to obtain comments from the public. Public comments are encouraged and will be accepted for sixty days from the date listed at the top of this page in the Federal Register. This process is conducted in accordance with the Paperwork Reduction Act of 1995.

This collection will contain the following information:
(1) The title of the form/collection;
(2) The agency form number, if any, and the applicable component of the Department sponsoring the collection.
(3) Who will be asked or required to respond, as well as a brief abstract;
(4) An estimate of the total number of respondents and the amount of time estimated for an average respondent to respond; and,
(5) An estimate of the total public burden (in hours) associated with the collection.

Comments and/or suggestions regarding the item(s) contained in this notice, especially regarding the estimated public burden and associated response time, should be directed to Ms. Charlotte C. Black, Assistant General Counsel, Office of Community Oriented Policing Services, 202–514–3750 and Mr. Robert B. Briggs, the Department of Justice's Clearance Officer who can be contacted at 202–514–4319. If you anticipate commenting on a form or collection, but find that time to prepare such comments will prevent you from prompt submission, you should notify the Office of Justice Programs and the Department of Justice Clearance Officer of your intent as soon as possible. Written comments regarding the burden estimate or any other aspect of the information collection may be submitted to:

Ms. Charlotte C. Black, Assistant General Counsel, Office of Community Oriented Policing Services, 1100 Vermont Avenue, NW, Washington, DC 20530
or
Mr. Robert B. Briggs, Systems Policy Staff, JMD, Suite 850, Washington Center, 1001 G Street, NW Washington, DC 20531

New Collection

(1) Innovative Community Policing Grants Application.

(2) Form COPS 016/01. Office of Community Oriented Policing Services (COPS), United States Department of Justice.

(3) Primary: State, Local or Tribal Governments. Other: None. This collection will be used to collect information relating to applications to initiate, support, and enhance innovative and collaborative projects implementing community policing. The information will be used to make determinations of competitive grant awards.

(4) 4,210 responses per year at 14 hours per response.

(5) 67,781 annual burden hours.

Public comment on this proposed information collection is strongly encouraged.

Dated: October 27, 1995.

Robert B. Briggs,

Department Clearance Officer, United States Department of Justice.

[FR Doc. 95–27119 Filed 10–31–95; 8:45 am]

BILLING CODE 4410–01–M

DEPARTMENT OF LABOR

Office of the Secretary

Agency Recordkeeping/Reporting Requirements Under Review by the Office of Management and Budget (OMB)

October 26, 1995.

The Department of Labor has submitted the following public information collection requests (ICRs) to the Office of Management and Budget (OMB) for review and clearance under the Paperwork Reduction Act of 1995 (P.L. 104–13, 44 U.S.C. Chapter 35). Copies of these individual ICRs, with applicable supporting documentation, may be obtained by calling the Department of Labor Acting Departmental Clearance Officer, Theresa M. O'Malley ((202) 219–5095). Comments and questions about the ICRs listed below should be directed to Ms. O'Malley, Office of Information Resources Management Policy, U.S. Department of Labor, 200 Constitution Avenue, NW., Room N–1301, Washington, DC 20210 within 30 days from the date of this publication in the Federal Register. Comments should also be sent to the Office of Information and Regulatory Affairs, Attn: OMB Desk Officer for ESA, Office of Management and Budget, Room 10325, Washington, DC 20503 ((202) 395–7316).

Individuals who use a telecommunications device for the deaf (TTY/TDD) may call (202) 219–4720 between 1:00 p.m. and 4:00 p.m. Eastern time, Monday through Friday.

Agency: Employment Standards Administration
Title: Annual Report of Earnings
OMB Number: 1215–0136
Agency Number: CM–777
Frequency: Annually
Affected Public: Individuals or households
Number of Respondents: 430
Estimated Time Per Respondent: 17 minutes
Total Burden Hours: 122
Description: This report is used to adjust benefits disbursed for the preceding year and to estimate adjustments, if any, for the following year due to excess earnings.

Agency: Employment Standards Administration
Title: Representative Fee Request
OMB Number: 1215–0078
Agency Number: CA–38 (FEC)
Frequency: On occasion
Affected Public: Individuals or households; Business or other for-profit

Program	Number of respondents	Average time per respondent	Burden hours
Federal Employee Compensation	3,000	1½ hours	4,500
Longshore	11,000	½ hour	5,500
Total burden hours			10,000

Description: The Office of Worker's Compensation Program (OWCP) reviews requests for approval for a fee for services provided to OWCP claimant/benefits submitted by attorneys/representatives.

Agency: Employment Standards Administration

Title: Recordkeeping and Reporting Requirements—Supply and Service Contractors

OMB Number: 1215–0072

Agency Number: None

Frequency: Annually

Affected Public: Business or other for-profit; Not-for-profit institutions; State, Local or Tribal Government

	Number of respondents	Average time per respondent	Burden hours
Reporting	64,513	11.01 hours	710,825
Recordkeeping	88,797	155.8 hours	13,836,404
Total burden hours			14,547,229

Description: Recordkeeping and reporting obligations incurred by Federal contractors and subcontractors under Executive Order 11246, Section 503 of the Rehabilitation Act of 1973, and 38 U.S.C. 4212 are necessary to substantiate compliance with nondiscrimination and affirmative action requirements monitored by the Office of Federal Contract Compliance Programs.

Theresa M. O'Malley,

Acting Departmental Clearance Officer.

[FR Doc. 95–27098 Filed 10–31–95; 8:45 am]

BILLING CODE 4510–27–M

Bureau of Labor Statistics

Proposed Information Collection Request Submitted for Public Comment and Recommendations; Business Birth Pilot Study

ACTION: Notice.

SUMMARY: The Department of Labor, as part of its continuing effort to reduce paperwork and respondent burden, conducts a preclearance consultation program to provide the general public and Federal agencies with an opportunity to comment on proposed and/or continuing collections of information in accordance with the Paperwork Reduction Act of 1995. This program helps to ensure that requested data can be provided in the desired format, reporting burden is minimized, reporting forms are clearly understood, and the impact of collection requirements on respondents can be properly assessed. Currently, the Bureau of Labor Statistics (BLS) is soliciting comments concerning the proposed new ''Business Birth Pilot Study.''

A copy of the proposed information collection request (ICR) can be obtained by contacting the individual listed below in the address section of this notice.

DATES: Written comments must be submitted on or before January 2, 1996.

ADDRESSES: Send comments to Karin G. Kurz, BLS Clearance Officer, Division of Management Systems, Bureau of Labor Statistics, Room 3255, 2 Massachusetts Avenue NE., Washington, DC 20212.

FOR FURTHER INFORMATION CONTACT:

Ms. Kurz on 202–606–7628 (this is not a toll free number).

SUPPLEMENTARY INFORMATION:

I. Background

The Bureau of Labor Statistics is initiating a major redesign of the Current Employment Statistics (CES) monthly payroll survey, including further research into methods for directly capturing data on new business births as an integrated part of a probability sample design. The purpose of this collection is to explore a procedure for estimating business birth employment utilizing sampled data. An ongoing sample of business births would be maintained in order to produce birth estimates and to accurately reflect the changes in employment of business births from one benchmark period to the next.

II. Current Actions

The CES program is a monthly payroll survey of nearly 400,000 business establishments. It provides estimates of employment, average weekly hours, and average hourly earnings, by industry, for the Nation, States, and approximately 270 large metropolitan areas. These data are used by National as well as State policy makers to analyze current economic conditions and to set economic policy.

The advantage of CES data to its users is timely release of data at industry and geographic levels with an annual benchmark to full population counts. However the CES has limitations which hamper its ability to accurately reflect current monthly employment trends: the lack of a probability-based sample design and the absence of a method for directly measuring employment resulting from business births.

A sound statistical procedure which utilize a probability sample selected from a comprehensive list of business births, in conjunction with population counts available from that list, would provide for reliable estimates to be made for business birth employment at the National and State levels by major industry division.

The data collected from this pilot survey would be used to estimate business births to complement the redesigned CES survey based on a probability sample design. In addition, a longitudinal data base of the birth units would be kept to track the trend of these firms in comparison to the ''non-birth'' units in the CES survey. This information would be used to

improve the CES design by developing the best approach to incorporate births into the CES sample.

This will reduce or eliminate the need for substantial ''bias adjustments'' currently applied to the CES sample.

This survey will utilize computer assisted telephone interview (CATI) techniques to administer the birth questionnaire to sampled units. Those units that are classified as births will further answer questions on employment and Standard Industrial Class (SIC) verification. These units will be asked only to submit employment figures for each subsequent month during a two-year period by either CATI or Touch-Tone Data Entry (TDE).

The sample design calls for the probability of small establishments being selected to be smaller than the probability for larger establishments. This will reduce response burden for small business.

Type of Review: New.

Agency: Bureau of Labor Statistics.

Title: Business Birth Pilot Study.

OMB Number:

Frequency: Monthly.

Affected Public: Business or other for-profit; Not-for-profit institutions.

Number of Respondents: 12,000.

Estimated Time for Response: 5 minutes.

Total Burden Hours: 2320 hours.

Comments submitted in response to this notice will be summarized and/or included in the request for Office of Management and Budget approval of the ICR; they also will become a matter of public record.

Signed at Washington, DC, this 26th day of October, 1995.

Peter T. Spolarich,

Chief, Division of Management Systems, Bureau of Labor Statistics.

[FR Doc. 95–27100 Filed 10–31–95; 8:45 am]

BILLING CODE 4510–24–M

Employment and Training Administration

[TA–W–31,469]

ABEPP Acquisition Corporation DBA Abbott & Company Lafayette, Georgia; Notice of Termination of Investigation

Pursuant to Section 221 of the Trade Act of 1974, an investigation was initiated on September 25, 1995 in response to a worker petition which was filed September 12, 1995 on behalf of workers at Abbott & Company, Lafayette, Georgia (TA–W–31,469).

The petitioning group of workers are covered under an existing Trade Adjustment Assistance certification (TA–W–30,435C). Consequently, further investigation in this case would service no purpose, and the investigation has been terminated.

Signed at Washington, D.C., this 20th day of October 1995.

Russell T. Kile,

Acting Program Manager, Policy and Reemployment Services, Office of Trade Adjustment Assistance.

[FR Doc. 95–27092 Filed 10–31–95; 8:45 am]

BILLING CODE 4510–30–M

[TA–W–30,435; TA–W–30,435C]

ABEPP Acquisition Corporation d/b/a Abbott & Company, North Baltimore, Ohio; Lafayette, Georgia; Amended Certification Regarding Eligibility To Apply for Worker Adjustment Assistance

In accordance with Section 223 of the Trade Act of 1974 (19 U.S.C. 2273) the Department of Labor issued a Certification of Eligibility to Apply for Worker Adjustment Assistance on December 8, 1994, applicable to all workers at the subject firm location in North Baltimore, Ohio. The notice was published in the Federal Register on January 20, 1995 (60 FR 419).

New information received from the company shows that worker separations have occurred at the Lafayette, Georgia location of ABEPP Acquisition Corporation, d/b/a Abbott & Company. The workers produce wiring harnesses. The Department is amending the certification to cover these workers.

The intent of the Department's certification is to include all workers of the subject firm who were adversely affected by increased imports.

The amended notice applicable to TA–W–30,435 is hereby issued as follows:

''All workers of the North Baltimore, Ohio (TA–W–30,435), and Lafayette, Georgia (TA–W–30,435C) plants of ABEPP Acquisition Corporation, d/b/a Abbott & Company engaged in employment related to the production of electrical wire harnesses who became totally or partially separated from employment on or after October 10, 1993 are eligible to apply for adjustment assistance under Section 223 of the Trade Act of 1974.''

Signed at Washington, DC this 20th day of October 1995.

Russell T. Kile,

Acting Program Manager, Policy and Reemployment Services, Office of Trade Adjustment Assistance.

[FR Doc. 95–27094 Filed 10–31–95; 8:45 am]

BILLING CODE 4510–30–M

[TA–W–27,872; TA–W–27,872A]

Douglas Aircraft Company, Long Beach, California and Carson, California; Amended Certification Regarding Eligibility to Apply for Worker Adjustment Assistance

In accordance with Section 223 of the Trade Act of 1974 (19 USC 2273) the Department of Labor issued a Certification of Eligibility to Apply for Worker Adjustment Assistance on March 15, 1993, applicable to all workers of Douglas Aircraft Company located in Long Beach, California.

At the request of the petitioners, the Department is amending the certification to include workers of the Carson facility of the subject firm. New information provided by the petitioners reveal that workers at Carson were inadvertently excluded from the certification. The workers at the Douglas Aircraft, Carson, California location provide support services which directly relates to the production of commercial aircraft at the Long Beach manufacturing plant.

The intent of the Department's certification is to include all workers of Douglas Aircraft Company adversely affected by imports.

The amended notice applicable to TA–W–27,872 is hereby issued as follows:

''All workers of Douglas Aircraft Company, Long Beach, California (TA–W–27,872) and Carson, California (TA–W–27,872A) engaged in employment related to the production of commercial transport aircraft who became totally or partially separated from employment on or after September 25, 1991 through March 14, 1995 are eligible to apply for adjustment assistance under Section 223 of the Trade Act of 1974.''

Signed at Washington, D.C. this 20th day of October 1995.

Russell T. Kile,

Acting Program Manager, Policy and Reemployment Services, Office of Trade Adjustment Assistance.

[FR Doc. 95–27096 Filed 10–31–95; 8:45 am]

BILLING CODE 4510–30–M

[TA–W–30,715; TA–W–30,715A]

Hanover Shoe Company, Marlington, West Virginia and Hanover Shoe Company, Hanover, Pennsylvania; Amended Certification Regarding Eligibility To Apply for Worker Adjustment Assistance

In accordance with Section 223 of the Trade Act of 1974 (19 USC 2273) the Department of Labor issued a Certification of Eligibility to Apply for Worker Adjustment Assistance on February 22, 1995, applicable to all

workers at Hanover Shoe Company located in Marlington, West Virginia. The notice was published in the Federal Register on March 10, 1995 (60 FR 13177).

At the request of the company, the Department reviewed the certification for workers of the subject firm. New findings show that worker separations have occurred at the subject firm's production facility in Hanover, Pennsylvania. The workers produce men's shoes.

The intent of the Department's certification is to include all workers of Hanover Shoe adversely affected by imports.

The amended notice applicable to TA–W–30,715 is hereby issued as follows:

''All workers of Hanover Shoe Company, Marlington, West Virginia (TA–W–30,715) and Hanover Shoe Company, Hanover, Pennsylvania (TA–W–30,715A) engaged in employment related to the production of men's shoes who became totally or partially separated from employment on or after January 25, 1994 are eligible to apply for adjustment assistance under Section 223 of the Trade Act of 1974.''

Signed at Washington, D.C. this 20th day of October 1995.

Russell T. Kile,

Acting Program Manager, Policy and Reemployment Services, Office of Trade Adjustment Assistance.

[FR Doc. 95–27093 Filed 10–31–95; 8:45 am]

BILLING CODE 4510–30–M

[TA–W–30,823; TA–W–30,823A]

The Leslie Fay Companies, Inc. New York, New York; Amended Certification Regarding Eligibility To Apply for Worker Adjustment Assistance

The Leslie Fay Company, Incorporated dress division which includes Andy Fashions; Downing Garment; Glen Lyon Garment; Kingston Fashions; Pittston Fashions; Throop Fashions; and Ricky Fashions—at Route 315, Wilkes-Barre, Pennsylvania

In accordance with Section 223 of the Trade Act of 1974 (19 U.S.C. 2273) the Department of Labor issued a Certification of Eligibility to Apply for Worker Adjustment Assistance on April 14, 1995, applicable to all workers at the Leslie Fay Company, Incorporated operating various dress manufacturing facilities in Wilkes-Barre, Pennsylvania. The notice was published in the Federal Register on May 9, 1995 (60 FR 24653).

At the request of the company, the Department reviewed the certification for workers of the subject firm. The findings show that workers of the Leslie Fay Companies, Inc., located in New York, New York, were inadvertently omitted from the certification.

The intent of the Department's certification is to include all workers of Leslie Fay adversely affected by imports.

The amended notice applicable to TA–W–30,823 is hereby issued as follows:

''All workers and former workers of The Leslie Fay Dress Division in Wilkes-Barre, Pennsylvania which includes: Andy Fashions; Downing Garment; Glen Lyon Garment; Kingston Fashions; Pittston Fashions; Throop Fashions; and Ricky Fashions (TA–W–30,823); and The Leslie Fay Companies, Inc., New York, New York (TA–W–30,823A) who were engaged in employment related to the production of ladies' dresses and became totally or partially separated from employment on or after March 1, 1994 are eligible to apply for adjustment assistance under Section 223 of the Trade Act of 1974.''

Signed at Washington, DC this 20th day of October 1995.

Russell T. Kile,

Acting Program Manager, Policy and Reemployment Services, Office of Trade Adjustment Assistance.

[FR Doc. 95–27095 Filed 10–31–95; 8:45 am]

BILLING CODE 4510–30–M

Federal-State Unemployment Compensation Program: Unemployment Insurance Program Letters Interpreting Federal Unemployment Insurance Law

The Employment and Training Administration interprets Federal law requirements pertaining to unemployment compensation (UC) as part of its role in the administration of the Federal-State UC program. These interpretations are issued in Unemployment Insurance Program Letters (UIPLs) to the State Employment Security Agencies (SESAs). The UIPLs described below are published in the Federal Register in order to inform the public.

UIPL 29–83 Change 2

Secondary adjustments are a part of many State experience rating plans. This UIPL provides States with additional guidance concerning those secondary adjustments which may be used in determining reduced rates for employers.

UIPL 22–87, Change 1

UIPL 22–87, issued in 1987, consolidated several issuances concerning the treatment of pensions received by claimants for UC. This Change 1 to UIPL 22–87 provides further guidance on the subject. Specifically, it deals with the requirements concerning pensions when amounts are rolled over into eligible retirement plans. It was issued in response to numerous questions on the subject which were raised by States trying to determine how to deal with rollovers.

UIPL 17–95, Change 1

Public Law 103–465, commonly known as the legislation on ''GATT''—The General Agreement on Tariffs and Trade, included a provision that, effective with weeks beginning after January 1, 1997, requires States to deduct and withhold Federal income tax from UC if the individual so elects. UIPL 17–95 explained the change in UC law, discussed its effective date and provided model language for States to use in amending State UC law. Change 1 to UIPL 17–95 advised States of the Department of Labor's position concerning priorities when a claimant subject to withholding required under State law also requests the withholding of income tax.

UIPL 35–95

As a result of the increased use of telephone or other electronic methods of UC tax collection and benefit claimstaking, the Department has found it necessary to issue this UIPL in order to ensure that States are aware of the Department's position concerning the use of the new technology as it relates to the UC program. This UIPL sets forth the Department's position on the various issues involved and interprets the relevant law and regulation.

UIPL No. 1–96

The Department issues several types of directives in order to set forth official agency policy concerning the programs administered by the Department. Questions have been raised by several groups regarding what weight these directives carry as interpretations of Federal law. As a result, this directive was issued to clarify the status of these directives.

UIPL 2–96

It came to the Department's attention that several States restrict the approval of training to that which is provided within the State. Since 1974, it has been the express position of the Department that such restrictions are contrary to the requirements of the Federal Unemployment Tax Act. This directive was issued to restate and reinforce that position.

Dated: October 26, 1995.

Timothy M. Barnicle,

Assistant Secretary of Labor.

Department of Labor

Employment and Training Administration, Washington, D.C. 20210

Classification: UI

Correspondence Symbol: TEURL

Dated: September 28, 1995

Directive: Unemployment Insurance Program Letter of No. 29–83 Change 2

To: All State Employment Security Agencies

From: Mary Ann Wyrsch, Director, Unemployment Insurance Service

Subject: Experience Rating—Permissible Secondary Adjustments

1. *Purpose.* To provide States with additional guidance concerning those secondary adjustments which may be used in determining reduced rates for employers.

2. *References.* The Federal Unemployment Tax Act (FUTA); the Social Security Act (SSA); Unemployment Insurance Program Letter (UIPL) No. 29–83, dated June 23, 1983 and UIPL No. 29–83, Change 1, dated September 24, 1991 (both published at 56 *Fed. Reg.* 54891 (October 23, 1991)); and Employment Security Memorandum (ESM) No. 9, dated July 1940.

3. *Background.* Secondary adjustments are a part of many State experience rating plans. They are adjustments, permissible under limited conditions, to the measure of an employer's experience which bear no relation to the employer's experience. The most typical example of a secondary adjustment is the triggering of a particular rate schedule due to the unemployment fund's balance. Recently a question has been raised as to whether payments by employers to funds other than the State's unemployment fund may be used as secondary adjustments. This UIPL provides the Department's position.

Rescissions: None

Expiration Date: September 30, 1996

4. *Discussion.*

a. *Federal law.* As a condition of employers in a State receiving the additional credit, the State's law must be certified as meeting the requirements of Section 3303, FUTA, which provides, in pertinent part, as follows—

(a) STATE STANDARDS.—A taxpayer shall be allowed an additional credit under Section 3302(b) with respect to any reduced rate of contributions permitted by a State law, only if the Secretary of Labor finds that under such law—

(1) no reduced rate of contributions to a pooled fund or to a partially pooled account is permitted to a person (or group of persons) having individuals in his (or their) employ except on the basis of his (or their) experience with respect to unemployment or other factors bearing a direct relation to unemployment risk during not less than the 3 consecutive years immediately preceding the computation date * * *.

The term ''pooled fund'' is defined in Section 3303(c)(2), FUTA, as ''an unemployment fund or any part thereof * * * into which the total contributions of persons contributing thereto are payable, in which all contributions are mingled and undivided, and from which compensation is payable to all individuals eligible for compensation from such fund.'' Similarly, Section 3303(c)(3), FUTA, defines ''partially pooled account'' as a ''part of an unemployment fund * * *.'' Section 3306(f), FUTA, defines ''unemployment fund'' as ''a special fund * * * for the payment of compensation * * *.'' These provisions establish an explicit linkage between experience rating and payments to the unemployment fund from which unemployment compensation (UC) is paid.

b. *Secondary Adjustments.* As noted in ESM No. 9 UIPL No. 29–83, the Department and its predecessor agencies have approved experience rating plans using secondary adjustments which are not related to an employer's experience. The following explanation of secondary adjustments (derived in part from ESM No. 9) is from page 10 of the attachment to UIPL 29–83:

The requirement that a reduced rate must be based on the employer's experience makes it necessary to maintain the influence of that experience in the determination of the reduced rate granted to an employer. The measurement of experience may be subjected to adjustments by the application of other factors bearing no relation to an employer's experience only if the basic experience factor has not been so impaired by combination with such other factors that the employer's own experience is no longer the basic determinant of his reduced rate.

* * * * *

A secondary adjustment that results in a *reduction* of rates has been found not to be an unreasonable distortion of the experience factor if the reduction is the same for all rated employers and if the reduction is not applied to employers not otherwise entitled to a reduced rate based on their own experience. [Emphasis in original.]

Although UIPL 29–83 is broadly written, it should not be read to permit the introduction of any factor unrelated to an employer's experience. It is the position of the Department that, to meet the requirements of Section 3303(a)(1), FUTA, secondary adjustments must directly serve the purpose of the unemployment fund.

A secondary adjustment, by definition, involves the intrusion of a factor unrelated to experience into the State's experience rating system. It does not follow that any intrusion is permissible. In fact, these intrusions have in the past been limited as described in UIPL 29–83. As discussed in item 4.a. above, experience rating is explicitly linked to payments to the unemployment fund. Therefore, the introduction of a factor which does not directly serve the purpose of the unemployment fund (i.e., the payment of UC) is an unacceptable intrusion into experience rating.

A payment to fund other than the unemployment fund is not a factor directly serving the unemployment fund's purpose and may not be used in determining the rate of an individual employer. This applies to payments to State general funds (for example, income or sales tax payments) as well as to payments which could potentially be used for payments of UC.[1] Similarly, the balance in another State fund may not be used to trigger rate schedules for the unemployment fund since the other fund does not directly serve the purpose of the unemployment fund.

A review of previously approved secondary adjustments indicates that the Department has limited approval only to adjustments directly serving the purpose of the unemployment fund.[2]

[1] The principal in certain State funds (often called reserve funds) may be used for any or all of the following purposes: the payment of UC, loans to the State's unemployment fund, or the payment of interest on advances made under Title XII, SSA. Reserve fund interest is used for non-UC purposes such as training or economic development activities. To date, all State reserve funds have been created with a concurrent reduction in the amount payable to the State's unemployment fund. Thus, the reserve funds have deprived the unemployment fund of assets and interest earnings. Moreover, there is no guarantee that the State will not amend its law to authorize use of reserve fund moneys for non-UC purposes. This is because, unlike unemployment funds, reserve funds are not subject to the ''immediate deposit'' with ''withdrawal'' standards of Sections 3304(a) (3) and (4), FUTA, and Sections 303(a) (4) and (5), SSA, which assure unemployment fund moneys will be used for the payment of UC. Finally, payment of interest on advances made under Title XII, SSA, from the unemployment fund is prohibited by Section 303(c)(3), SSA, and Section 3304(a)(17), FUTA. Thus, payments of interest do not serve the purposes of the unemployment fund.

[2] Voluntary contributions were originally considered to be acceptable secondary adjustments since they are paid into the unemployment fund, thereby directly servicing the fund's purpose. Since Section 3303(d), FUTA, now contains specific authorization for voluntary contributions, their status as secondary adjustments is moot. Section 3303(d) was added to FUTA in 1947 to ''give express statutory sanction to the administrative interpretation which has permitted voluntary contributions . . .'' and to ''provide for a definite period within which voluntary contributions must

Continued

For example, the triggering of rate schedules generates sufficient revenues for the payment of UC. Factors related to socialized costs, including the experience factor in benefit-wage ratio States, serve to make the fund whole for costs which are not otherwise funded through experience rates. These costs include UC not charge to a specific employer or charged to an employer who has gone out of business.

5. *Action Required.* State agency administrators are requested to review existing State law provisions to ensure that Federal law requirements as set forth in this UIPL are met. Prompt action, including corrective legislation, should be taken to assure Federal requirements are met.

7. *Inquiries.* Direct questions to the appropriate Regional Office.

Department of Labor

Employment and Training Administration, Washington, D.C. 20210

Classification: UI

Correspondence Symbol: TEURL

Dated: June 19, 1995

Directive: Unemployment Insurance Program Letter No. 22–87 Change 1

To: All State Employment Security Agencies

From: Mary Ann Wyrsch, Director, Unemployment Insurance Service

Subject: Whether Unemployment Compensation must be Reduced when Amounts are Rolled Over into Eligible Retirement Plans

1. *Purpose.* To provide guidance concerning the Federal unemployment compensation (UC) law requirements relating to the deduction from UC of ''rollovers'' of retirement funds.

2. *References.* The Internal Revenue Code of 1986 (IRC), including section 3304(a)(15) of the Federal Unemployment Tax Act (FUTA) and section 402; and Unemployment Insurance Program Letter (UIPL) No. 22–87, 52 Fed. Reg. 22546 (1987). UIPL 22–87 was released April 30, 1987, but erroneously dated April 30, 1988.

3. *Background.* Section 3304(a)(15), FUTA, requires, as a condition for employers in a State to receive credit against the Federal unemployment tax, that the amount of UC payable to an individual be reduced for any week which begins in a period with respect to which the individual is ''receiving a governmental or other pension, retirement or retired pay, annuity, or any other similar periodic payment which is based on the previous work of such individual . . .'' This section of FUTA goes on to provide certain exceptions to this requirement not relevant to this Change 1.

Rescissions: None.

Expiration Date: June 30, 1996.

Section 402(c), IRC, provides for the transfer of ''eligible rollover distributions'' from a ''qualified trust'' to an ''eligible retirement plan.'' (Section 402(c)(8) of the IRC provides definitions of ''qualified trust'' and ''eligible retirement plan.'' Section 402(c)(4) defines ''eligible rollover distribution.'') If all the requirements of Section 402, IRC, are met, including that the transfer of the payment is made within 60 days of receipt by the individual, then the payments will not be included in gross income for Federal income tax purposes.

In light of the retirement pay provisions of Section 3304(a)(15), FUTA, the question has arisen whether States are required to reduce UC when distributions are rolled over. This Change 1 is issued to provide the Department of Labor's position on this question.

4. *Effect of Rollovers.* If a rollover from a qualified trust into an eligible retirement plan is not subject to Federal income tax, then it is not considered to be ''received'' by the individual for purposes of Section 3304(a)(15), FUTA. A non-taxable rollover does not represent a payment to the individual for purposes of retirement. Instead, it merely effectuates a change with respect to the retirement plan under which the amounts are maintained. Therefore, it is not considered to be ''received'' and States are not required to reduce UC due to such rollovers. However, if any distribution (or part of a distribution) from a qualified trust is subject to Federal income tax, then that amount is considered to be ''received'' for purposes of the FUTA and UC must be reduced if otherwise required by Section 3304(a)(15).

States should also be aware that, when any distribution is paid as a lump sum, FUTA does not require a reduction in UC. In this case, it is not necessary to determine if the payment is ''received'' by the individual. As discussed on page 6 of UIPL 22–87, FUTA does not require UC to be reduced due to the receipt of non-periodic, lump sum retirement payments. Further, FUTA only requires reduction of UC due to receipt of amounts based on the previous work of the individual. Therefore, for example, if a distribution is paid to a surviving spouse, the spouse's UC need not be reduced.

5. *Action Required.* State Administrators should provide this information to appropriate staff.

6. *Inquiries.* Inquiries should be directed to the appropriate Regional Office.

Department of Labor

Employment and Training Administration, Washington, D.C. 20210

Classification: UI

Correspondence Symbol: TEURL

Dated: September 28, 1995

Directive: UNEMPLOYMENT INSURANCE PROGRAM LETTER NO. 17–95 CHANGE 1

To: ALL STATE EMPLOYMENT SECURITY AGENCIES

From: MARY ANN WYRSCH, Director, Unemployment Insurance Service

Subject: Priority of Withholding from Unemployment Compensation (UC)

1. *Purpose.* To advise States of the Department of Labor's position concerning priorities when a claimant subject to withholding required under State law also requests the withholding of income tax.

2. *References.* The Internal Revenue Code of 1986 (IRC), as amended, including the Federal Unemployment Tax Act; Title III of the Social Security Act (SSA); Section 702 of P.L. 103–465; 26 C.F.R. 31–3402(i)–2; and Unemployment Insurance Program Letter (UIPL) 17–95.

3. *Background.* UIPL 17–95, dated February 28, 1995, provided guidance concerning the withholding of income tax from UC. This Change 1 provides guidance on a matter left unresolved in that UIPL: the priority of withholding when other amounts are also to be withheld from the same payment of UC.

4. *Discussion.* Federal law requires withholding from UC in certain cases. Under Section 303(a)(1), SSA, States must have ''methods of administration'' for enforcing amounts owed to the unemployment fund. The principal ''method of administration'' for collecting these overpayments is the offsetting of amounts from future payments of UC. Also, States are required to withhold certain child support obligations under Section 303(e)(2), SSA.

Rescissions: None

Expiration Date: September 30, 1996

Additional provisions of the SSA gives States the option of withholding other amounts from UC. Section 303(d)(2), SSA, provides for the withholding of Food Stamp

be made . . .'' (H. Rep. No. 759, 80th Cong., 1st Sess. (1947)).

overissuances from UC. Section 303(g), SSA, authorizes interstate offset of overpayments as well as offsets of overpayments between State UC and Federal UC programs where the State acts as an agent for the Department of Labor.

Unlike the above forms of withholding, withholding of income tax is voluntary on the part of the claimant. Giving priority to the voluntary withholding of income tax would frustrate the ''involuntary'' withholding requirements.

Section 3402(p)(2), IRC, provides that, for withholding purposes, a payment of UC shall be treated as if it were a payment of *wages* by an employer to an employee. Implementing regulations at 20 C.F.R. 31.3402(i)–2 provide that an employee may request the employer to withhold an additional amount from the employee's wages. The employer must comply with the employee's request, but only to the extent that the requested amount does not exceed the amount remaining *after* the employer has withheld all amounts required to be withheld by Federal, State and local laws.

Based on the above, the Department has concluded that amounts required to be withheld under State law must be withheld prior to any voluntary withholding requested by the claimant. The Department continues to leave to the States the matter of priorities among amounts that are required to be withheld. Although States are encouraged to be more specific on this point, Section (4) of the attached revised draft language does not specify any priorities among the required withholdings. States may, of course, also make any changes to the draft language necessary to conform with State usage.

5. *Action Required.* State agencies should take action to assure that the above position is reflected in State law. States not using the draft language are reminded that they will need to submit a plan to the appropriate Regional Office no later than September 30, 1996.

6. *Inquiries.* Inquiries should be directed to the appropriate Regional Office.

7. *Attachment.* Revised Draft Language to Implement a Voluntary Withholding Program.

Attachment to UIPL 17–95, Change 1—Revised Draft Language To Implement a Voluntary Withholding Program

(1) An individual filing a new claim for unemployment compensation shall, at the time of filing such claim, be advised that:

(A) Unemployment compensation is subject to Federal, State and local income tax;

(B) Requirements exist pertaining to estimated tax payments;

(C) The individual may elect to have Federal income tax deducted and withheld from the individual's payment of unemployment compensation at the amount specified in the Federal Internal Revenue Code;

(D) The individual may elect to have State income tax deducted and withheld from the individual's payment of unemployment compensation at the rate of ____ percent;

(E) The individual may elect to have local income tax deducted and withheld from the individual's payment of unemployment compensation at the rate of ____ percent;

(F) The individual may elect to have State and local income taxes deducted and withheld from the individual's payment of unemployment compensation for other States and localities outside this State at the percentage established by such State or locality; and

(G) The individual shall be permitted to change a previously elected withholding status.

(2) Amounts deducted and withheld from unemployment compensation shall remain in the unemployment fund until transferred to the Federal, State or local taxing authority as a payment of income tax.

(3) The commissioner shall follow all procedures specified by the United States Department of Labor and the Federal Internal Revenue Service pertaining to the deducting and withholding of income tax.

(4) Amounts shall be deducted and withheld under this section only after amounts are deducted and withheld for any overpayments of unemployment compensation, child support obligations, food stamp overissuances or any other amounts required to be deducted and withheld under this Act.

Department of Labor

Employment and Training Administration, Washington, D.C. 20210

Classification: UI

Correspondence Symbol: TEUMI

Dated: June 28, 1995

Directive: Unemployment Insurance Program Letter No. 35–95

To: All State Employment Security Agencies

From: Mary Ann Wyrsch, Director, Unemployment Insurance Service

Subject: The Department of Labor's Position on Issues and Concerns Associated With the Utilization of Telephone and Other Electronic Methods in the Unemployment Insurance (UI) Program

1. *Purpose.* To advise State Employment Security Agencies (SESAs) of the Department of Labor's position regarding issues relating to telephone or other electronic methods of processing in the UI program.

2. *Background.* Several SESAs are developing, exploring, or implementing a variety of innovative approaches to UI tax and benefit claimstaking and processing utilizing new and developing electronic information/communication technologies. The technologies include, but are not limited to, interactive voice response units (IVRs) for continued claims (inquiry and filing), telephone initial claimstaking, and electronic funds transfer for collecting UI taxes and paying benefits. These approaches continue the movement of the UI program toward a ''paperless'' system, thereby reducing office traffic and making it more easy and convenient for claimants and employers to transact UI business.

Insofar as SESAs have planned for or implemented new methods of claimstaking, issues have arisen requiring a response from the Department. Since there has not been an authoritative statement of the Department's position on this matter, the Department's position is set forth below.

Rescissions: None

Expiration Date: June 30, 1996

3. *Position.*

The Department's overall position is to promote methods of administration which ensure that UI applicants are afforded prompt and efficient service, and also ensures that pertinent Federal requirements are met by the claimant and SESA. To this end, the Department believes that SESAs should move toward fully implementing telephone claimstaking or other electronic methods of filing (e.g., computer terminals at kosks in one-stop centers etc.) for both initial and continued claims filing processes. The UI Information Technology Support Center (ITSC) will support the nationwide expansion of telephone claims technology.

Any system planned or implemented to provide ease and convenience for filing claims must, however, provide safeguards to meet the requirement of Section 303(a)(1) of the Social Security Act (SSA), that the State have in place such methods of administration reasonably calculated to insure the full payment of UI when due. In other words, there must be methods in place to protect against improper payments and fraud. Also, prior to filing an application (oral or IVR telephone system or other electronic method (touchscreen or computer keyboard)), claimants must be advised that the law provides penalties for false statements including penalties for perjury in regard to citizenship/immigration status. Since the State is required to establish a

record of the claim, the claimant should also be advised that his/her answers will cause a record to be produced.

A. *Initial Claimstaking.*

(1) Verification of Claimant Identity/Signature.

There is no Federal requirement that a claimant provide a signature on a claim form. Any such requirement would be pursuant to State law. However, Section 303(a)(1) of the SSA, requires that a State have such methods of administration to reasonably insure the full payment of unemployment compensation when due. In addition, Section 1137(a)(1), SSA, requires States to require the individual to furnish his/her Social Security Number as a condition of eligibility for benefits. These Federal provisions mean, among other things, that a State must have a system to reasonably insure that the name and Social Security Number used to establish eligibility for unemployment compensation belongs to the individual filing the claim.

(2) Identification of Ethnic Background and Handicapped Status.

The Department's regulations at 29 CFR Parts 31 and 32 require recipients of Department of Labor grant funds to collect, maintain and make available data as may be necessary to ascertain compliance with the requirements of the nondiscrimination statutes (Title VI of the Civil Rights Act of 1964, as amended; Section 504 of the Rehabilitation Act of 1973, and the Age Discrimination Act of 1975, as amended). Unemployment Insurance Program Letter UIPL) Nos. 46–89 and 46–89, Change 1, set forth the guidelines and requirements that State agencies must follow in collecting the data (at the time an individual files a new initial claim), and reporting the data relative to the unemployment insurance program.

There is no Federal requirement regarding the method to be utilized by the State to obtain the information (i.e., orally to a claimstaker, IVR, self-entry at a computer keyboard or touchscreen, completing a response on a hardcopy document or other method (e.g., recorded on tape)). However, the information must be given voluntarily by the individual and the State agency may not change the response of the applicant. The applicant also has the right to refuse to provide the information and such refusal will not subject such individual to any adverse action or treatment. Therefore, any telephone or other electronic claims filing system must be able to accommodate a ''no response'' answer.

(3) Child Support and Other Obligations.

Section 303(e)(2)(A)(i) of the SSA requires each State agency to ''require each new applicant for unemployment compensation to disclose whether or not such applicant owes child support obligations (as defined in the last sentence of paragraph (1).'' UIPL Nos. 1–82 and 15–82 set forth the basic requirements for States to follow in implementing the statute. Essentially, the disclosure requires a ''yes'' or ''no'' response to a question on any child support owed when individuals file a new initial claim.

Effective January 1, 1997, among other Federal law amendments, Section 3304(a)(18) of the Federal Unemployment Tax Act (added by P.L. 103–465 enacted December 8, 1994) requires States to offer voluntary withholding of Federal income tax for all unemployment compensation (includes State UI, UCFE/UCX, TRA, DUA, etc.) payments made after January 1, 1997. UIPL No. 17–95 advised State agencies of the provisions and furnished guidelines on implementation. States will need to include questions during the new initial claim filing process on whether the individual elects or declines to have income tax withheld (mandatory for Federal, and optional for State or local tax withholding if authorized by State law).

Additionally, other Federal law provisions permit States, if the States have provisions in their State laws, to withhold amounts from unemployment compensation to pay health insurance premiums and food stamp over-issuances. Such provisions would also require asking claimants to provide responses to questions at the time of filing initial claims.

For any of the above obligations, other than obtaining the needed information at the time of filing an initial claim, there is no Federal requirement for the method to be utilized by the State to obtain the information. The State agency may obtain the information orally, by IVR, keyboard or touchscreen entry, on a hardcopy document or other method.

(4) Citizenship or National Status.

Section 1137(d)(1)(A) of the SSA requires that each State require, as a condition of eligibility for unemployment compensation, ''a declaration in writing by the individual, (or, in the case of an individual who is a child, by another on the individual's behalf), under penalty of perjury, stating whether or not the individual is a citizen or national of the United States, that the individual is in a satisfactory immigration status.'' State laws require that individuals be able and available for work in order to be determined eligible for benefits. If an alien is not in ''satisfactory immigration status,'' such individual cannot be considered eligible for unemployment compensation. The Department issued guidance and instruction to States for implementation of Section 1137(d) and determining eligibility for aliens in UIPL Nos. 1–86; 12–87; 12–87, Change 1; and 6–89. The instructions provide that all applicants for unemployment compensation provide a ''yes'' or ''no'' response to a question on the new initial claim form or other form, asking if the applicant is a ''U.S. citizen or national.'' If the answer is ''no'', then an alien ID number is to be provided from registration documentation issued by the Immigration and Naturalization Service (INS) or such other documentation as the State determines constitutes reasonable evidence (Section 1137(d)(2). The above actions required of the applicant constitute ''in writing.''

In the case of telephone or other electronic method initial claims filing, it is the Department's position, that if the claimant takes action to produce a record indicating citizenship and immigration status, such as entry of data through a touchtone phone (IVR system) or through a computer keyboard or touchscreen response (at a kiosk) in response to a question, such action is a ''declaration in writing by the individual.'' However, a claimant's oral response to a claimstaker's question, and then the claimstaker's entry onto a form or into an electronic format, *does not* constitute such a declaration because the individual claimant is not making the electronic record him or herself, but such record is being made by a third party where an error could be made unbeknown to the claimant. In other words, the claimant must make the ''declaration in writing,'' not the claimstaker. If the SESA utilizes the latter procedure to take initial claims, the SESA must have an alternate means of obtaining an answer from the claimant that will satisfy the Federal requirement. Examples of such alternate means include recording the conversation on tape or obtaining the claimant's ''declaration in writing'' on a continued claim or other hard copy document.

In addition to the ''declaration in writing'' requirement of Section 1137(d)(1)(A), the provision also states that the declaration is made ''under penalty of perjury.'' However, it is the Department's position that State law must be followed regarding whether a claimant's statement (''declaration in writing'') is in a form that can uphold a perjury conviction. Therefore, the two tests for what constitutes a ''declaration in writing'' and for what is needed

under State law to uphold a ''penalty for perjury,'' must be met in order to comply with Section 1137(d)(1)(A) of the SSA. A SESA must consider both factors when designing and implementing a telephone or other electronic methods initial claims filing process.

(5) Not a Citizen or National—Presentation of Documentation.

Section 1137 (d)(2) of the SSA provides that if—

> An individual is not a citizen or national of the United States, there must be presented either—
>
> (A) alien registration documentation or other proof of immigration registration from the Immigration and Naturalization Service that contains the individual's alien admission number or alien file number * * *, or
>
> (B) Such other documents as the State determines constitutes reasonable evidence indicating a satisfactory immigration status.

Therefore, neither Sections 1137(d)(2)(A) or (B) of the SSA may be satisfied by information obtained by telephone (orally or IVR) or entry via a computer keyboard or touchscreen.

In order to satisfy the Federal law requirements, if a SESA utilizes a method of claimstaking other than in-person filing, and the claimant indicates a noncitizenship status, the SESA (State) *must* require that the claimant submit ''alien registration documentation or other proof of immigration registration from the INS that contains the individual's alien admission number or alien file number.'' (Requirement of Section 1137 (d)(2)(A).) Since an alien cannot allow his/her original INS documentation to leave his/her person, it is the Department's position that a photostatic copy of the document(s) submitted by mail or facsimile (FAX) transmission would suffice to meet the requirements of the Section in lieu of viewing the original document(s), particularly when taken in conjunction with the provisions of Section 1137 (d)(2)(B). That Section provides that the individual can submit such other documents as the *State* determines constitutes reasonable evidence indicating a satisfactory immigration status. This will allow the SESA to proceed with verification with INS required by Section 1137 (d)(3). The provisions of Section 1137(d)(2)(B) are also utilized when an individual cannot produce documentation that provides an alien admission or file number. Copies of such documents must then be sent to the INS for verification of status in accordance with Section 1137 (d)(4)(B)(i).

The Department is in the process of resolving with the INS the differences between the Systematic Alien Verification for Entitlements (commonly called SAVE) program manual distributed by the INS requiring all entitlement agencies to have applicants present original documents (which must be kept on the person of the alien at all times) and the provision of Section 1137(d)(2)(B) that authorizes the State to accept such other documents as the State determines constitutes reasonable evidence indicating a satisfactory immigration status (which could be copies). The SAVE manual does not appear to giver any consideration to a method of filing other than in-person.

B. *Other Program Areas.*

(1) Unemployment Compensation for Ex-servicemembers (UCX) Claim—Use of Form ETA–841 (Formerly ES 970).

Form ETA–841 is an optional form and is not needed to establish UCX eligibility since all required information is on the DD Form 214 or information received from the Louisiana Claims Control Center (LCCC) based on a SESA's inquiry. Therefore, States implementing telephone or other electronic methods of initial claim filing do not have to complete and have the claimant sign Form ETA–841.

(2) UCX Claim—Eligibility in the Absence of DD Form 214.

Under a telephone or other electronic method of initial claim filing, if the claimant does not present copy no. 4 of his/her DD Form 214 or SESA filing procedures do not require submittal of a copy, eligibility for UCX may be established based on an inquiry to the LCCC to verify the validity of data that was transmitted to the SESA in response to the SESA's original notification to the LCCC that a claim was filed. However, such eligibility may be established only if the LCCC provides a copy of copy no. 5 of DD Form 214 to the SESA. While it is not mandatory, the Department believes it is a preferable procedure to have the claimant present, or submit by mail or FAX, a copy of copy no. 4 of DD Form 214 to the SESA.

(3) Trade Readjustment Allowances (TRA) Claim—Employer Signature on Form TRA–855A.

Neither Federal law nor regulations require an employer's signature on the form. Therefore, the required information employers provide may be obtained by telephone or computer interface.

(4) Extended Benefits (EB) and TRA—Tangible Evidence of Work Search.

The Department's regulations at 20 CFR Part 615 implement the provisions of the Federal-State Extended Unemployment Compensation Act (EB Act). 20 CFR 615.8(g)(1) requires that an individual claiming EB shall make a systematic and sustained effort (as defined in 20 CFR 615.2(0)(8)) to search for suitable work (as defined in 20 CFR 615.8(d)(4)) each week after notification of his/her job prospects, and will furnish the State agency with each claim, tangible evidence of such efforts. The Department's regulations at 20 CFR 617.17(a) implementing the provisions of the Trade Act of 1974, as amended, require that the EB work test be satisfied for each week of TRA claimed. 20 CFR 615.2(o)(9) defines ''tangible evidence'' as a written record that can be verified that includes the actions taken, methods of applying for work, types of work sought, dates and places where work was sought, and the name of the employer or person contacted and the outcome.

Most States' telephone or other electronic methods of claim filing systems will not suffice for the EB or TRA programs. Therefore, States utilizing a telephone or other electronic method of claims filing must have an alternative system in place to obtain the detailed information of a systematic and sustained search for work required as tangible evidence on weekly claims for EB and TRA to comply with the EB regulatory requirements. As examples, a State could set up a telephone tape system, which would enable claimants to describe their detailed work search over the phone, or, a State could require hard copy documents to be submitted for each week claimed that provide the required information.

4. *Action.* SESA Administrators should inform appropriate staff of the Department's position set forth in this program letter. The position set forth should be followed by SESAs in the design or implementation of any telephone or other electronic claims filing method.

5. *Contact.* Questions concerning this issuance should be directed to the appropriate Regional Office.

Department of Labor

Employment and Training Administration, Washington, D.C. 20210

Classification: UI

Correspondence Symbol: TEURL

Dated: October 5,1995

Directive: Unemployment Insurance Program Letter No. 1–96

To: All State Employment Security Agencies

From: Mary Ann Wyrsch, Director, Unemployment Insurance Service

Subject: The Legal Authority of Unemployment Insurance Program Letters and Similar Directives

1. *Purpose.* To advise States of the position of the Department of Labor (Department) regarding the legal authority for Unemployment Insurance Program Letters (UIPLs) and other Departmental directives which affect the Federal-State Unemployment Insurance (UI) Program.

2. *References.* The Administrative Procedure Act (APA), 5 U.S.C. 551–559; the Social Security Act (SSA); and the Federal Unemployment Tax Act (FUTA).

3. *Background.* Departmental directives for the UI program include UIPLs, General Administration letters (GALs), Handbooks, the *Employment Security Manual* (*ESM*) and various transmittals of model legislation for implementing Federal law requirements. These directives are issued to the States under authority delegated by the Secretary of Labor.

The Department issues directives to set forth official agency policy. These directives state or clarify the Department's position, particularly with respect to the Department's interpretation of the minimum Federal requirements for conformity or compliance, thereby assuring greater uniformity of application of such requirements by the States. Oftentimes these directives provide information in the public interest which is vital to guiding the States' courses of operations.

States have raised questions regarding what weight these directives carry as interpretations of Federal law. These inquiries have come from State legislators, State Attorney General offices, other State officials and attorneys in Legal Services. It has sometimes been argued that, since the interpretations in these directives are not found in the Code of Federal Regulations, they have no legal effect. This UIPL is issued to advise States that these directives do, in fact, have legal effect.

Rescissions: None

Expiration Date: October 31, 1996

4. *Discussion.* The APA contains requirements to determine which rules are subject to its notice and comment procedures (ultimately leading to publication in the Code of Federal Regulations) to have force and effect as well as provisions for those rules which are not subject to those procedures. The APA, originally enacted on June 11, 1946, and later revised by P.L. 89–554 (5 U.S.C. 551–559) was passed in part to assist the various Federal Government agencies in their administration of statutes under their jurisdiction. The APA recognizes that some functions and some operations of Federal agencies do not lend themselves to a formal procedure. For this reason, the APA provides for different types of rules including ''substantive'' or ''legislative'' rules and ''interpretative'' rules. Section 553(b) of the APA, which requires that a general notice of proposed rule making must be published in the Federal Register, makes two exceptions to this requirement, one of which is relevant here as follows:

> Except when notice or hearing is required by statute, this subsection does not apply—
>
> (A) to interpretative rules, general statements of policy, or rules of agency organization, procedure, or practice; * * *.

The test for determining if a rule is interpretative, and thus not subject to the requirement of a published notice of proposed rule making, is found in *Gibson Wine Co., Inc.* v. *Snyder et al.*, 194 F.2d 329 (D.C. Cir. 1952). In *Gibson*, the court addressed an interpretative ruling transmitted by the Deputy Commissioner of the Internal Revenue Service. The court stated on page 331:

> Administrative officials frequently announce their views as to the meaning of statutes or regulations. Generally speaking, it seems to be established that ''regulations,'' ''substantive rules'' or ''legislative rules'' are those which create law, usually implementary to an existing law; whereas *interpretative rules are statements as to what the administrative officer thinks the statute or regulation means.* [Emphasis supplied.]

Under *Gibson*, an interpretative rule is one which explains or defines particular terms in a statute or is an opinion of an official, having authority on a particular subject, as to the meaning of a statute or regulation. *Id.* at 331–332.

British Caledonian Airways, Ltd. v. *C.A.B.*, 584 F.2d 982 (D.C. Cir. 1978), is a leading case concerning the use of interpretative rules. The court stated that the agency was ''construing the language and intent of the existing statute and regulations in order to * * * remove uncertainty'' which is ''a function peculiarly within the ability and expertise of the agency.'' *Id.* at 991. The agency's actions were entirely appropriate ''to illuminate the meaning'' of its regulations. *Id.* at 993. Another court has stated that, when interpretative rules reiterate or explain an explicit statutory obligation, they can even help ''make sense'' of inconsistent statutory direction created by acts of Congress as long as they do not impose a new procedure or obligation which is not derived from the language of the statute or regulation. *American Hospital Association* v. *Bowen*, 640 F. Supp. 453, 460 (D.D.C. 1986).

In *Cabais* v. *Egger*, 690 F.2d 234 (D.C. Cir. 1982), the court held that a UIPL was not subject to the APA notice and comment procedures when it construed the language and intent of a statute and reminded States of existing duties, and where the UIPL did not grant or deny rights nor impose obligations which did not already exist in statute.[1]

Even if an interpretative rule has a wide ranging effect or a ''substantial impact'' on individuals, this does not mean it is subject to notice and comment procedures. Following the U.S. Supreme Court decision in *Vermont Yankee Nuclear Power Corp.* v. *Natural Resources Defense Council Inc.*, 435 U.S. 519, 524 (1978) that courts are generally not free to impose on agencies requirements that exceed those required by the APA, courts have rejected the ''substantial impact'' test. *See Cabais*, 690 F.2d at 237–238); *Rivera* v. *Becerra, 714 F.2d 887 (9th Cir. 1983). The Rivera* court, which specifically addressed UIPLs, stated that agencies are not required to comply with a notice and comment procedure for interpretative rules which have a substantial effect because Congress considered the matter and explicitly excepted interpretative rules and general statements of policy from this procedure. *Id.* at 890–891. The court observed that agencies now freely issue interpretative rules as guidance and that unnecessarily restrictive procedures should not be imposed beyond that contemplated by the APA. *Id.*

5. *Action Required.* State Administrators are requested to provide the above information to the appropriate staff.

6. *Inquiries.* Direct questions to the appropriate Regional Office.

Department of Labor

Employment and Training Administration, Washington, DC 20210

Classification: UI

Correspondence Symbol: TEURL

Dated: October 5, 1995.

Directive: Unemployment Insurance Program Letter 2–96

To: All State Employment Security Agencies

From: Mary Ann Wyrsch, Director, Unemployment Insurance Service

Subject: Approval of Training for Individuals who Reside in or File from Another State

[1] The *Cabais* court did, however, conclude that, in one area, a UIPL did create a substantive rule since, contrary to the broad latitude granted to the states in the statute, the UIPL imposed ''an obligation on the States not found in the statute itself.'' *Id.* at 239.

1. *Purpose.* To inform States of the Department of Labor's position relating to the approval of training for individuals who reside in or file an unemployment compensation (UC) claim from another State.

2. *References.* Sections 3304(a)(8) and 3304(a)(9)(A) of the Federal Unemployment Tax Act (FUTA); *Draft Legislation to Implement the Employment Security Amendments of 1970 * * * H.R. 14705 (1970 Draft Legislation),* Unemployment Insurance Program Letter (UIPL) 1276, dated July 22, 1974; and 20 C.F.R. Part 616.

3. *Background.* The Department has discovered that some States restrict the approval of training to that which is provided within the State. Since 1974, it has been the express position of the Department that such restrictions are contrary to the requirements of Sections 3304(a)(8) and (9)(A), FUTA. This UIPL is issued to restate this position.

4. *Applicable Provisions of Federal Law.* Section 3304(a)(8), FUTA, requires that a State law, as a condition of certification for credit against the Federal unemployment tax, provide that:

Rescissions: None

Expiration Date: October 31, 1996

Compensation shall not be denied to an individual for any week because he is in training with the approval of the State agency (or because of the application, to any such week in training, of State law provisions relating to availability for work, active search for work, or refusal to accept work).

The expressed intent of Congress in enacting this section was ''to act to remove the impediments to training which remains in our unemployment insurance system.'' (H.R. Rep. No. 612, 91st Congress, 1st Session 17).

Section 3304(a)(9)(A), FUTA, further requires a State law to provide that:

Compensation shall not be denied or reduced to an individual solely because he files a claim in another State (or a contiguous country with which the United States has an agreement with respect to unemployment compensation) or because he resides in another State (or such a contiguous country) at the time he files a claim for unemployment compensation.

The expressed intent of Congress in enacting this section was to remove provisions of law ''which reduce the benefits, or otherwise penalize workers who reside elsewhere than in the State in which they worked and earned their right to benefits,'' because such provisions ''are not only inequitable to the individual claimant and injurious to the proper function of the unemployment system but inhibit among workers a very desirable mobility which is important to our economy.'' (H.R. Rep. No. 612, 91st Congress, 1st Session 17).

5. *Department of Labor Position.* Section 3304(a)(8), FUTA, prohibits the denial of UC to an individual undertaking training ''with the approval of the State agency.'' In the *1970 Draft Legislation,* the Department stated that ''each State is free to determine what training is appropriate'' and ''what criteria are established for approval of training.'' As a result, the *1970 Draft Legislation* provided only suggested criteria. Since then, the Department has, however, required that States apply ''reasonable'' criteria for the approval of training, and taken the position that the refusal of approval of training solely because the training is conducted in another State would be inconsistent with Sections 3304 (a)(8) and (a)(9)(a), FUTA. (*See* UIPL 1276, Section (A)(4)).

Limiting approval of training to that within a State would create an unreasonable burden on an individual residing in or filing a UC claim from another State, with the result that the individual would be discouraged from participating in training. In cases where such individuals cannot reasonably be expected to commute to training in a State in which they do not reside, individuals would have no choice but to choose between attending training or receiving UC. This result would be inconsistent with the expressed intent of Congress in enacting the approved training provision.

Further, Section 3304(a)(9)(A), FUTA, precludes denial of UC to an individual who files a claim or resides in another State (or a contiguous country with which the United States has an agreement with respect to UC) at the time he or she files a claim for UC. A State's refusal to approve training *solely* because it is conducted in another State is plainly inconsistent with this requirement. This result is also plainly inconsistent with the expressed intent of Congress since it inhibits the individual's mobility.

Limiting approval of training to institutions certified by the State Board of Education, or a similar State entity, also limits the approval of training to that undertaken within the State. This creates the same problems with Federal law as discussed in the two preceding paragraphs. States wishing to limit training to certified institutions must, therefore, provide for the approval of training taken at an institution certified by the State Board of Education or similar entity in the State in which the institution is located.

If the individual is attending training in another State, sufficient information must be collected to determine if the individual is attending training which is approvable under the appropriate State law. For interstate claims, the authority to approve training rests with the liable State. However, the liable State may adopt a determination by the agent State approving training for a particular individual or delegate such authority to the agent State. In fact, liable States should place as much reliance as possible on the recommendation of the agent State since the agent State is usually in the best position to know the individual's personal situation and its own labor market. Similarly, in a combined-wage claim, the paying State has the authority to approve training. The paying State may also adopt a determination by another State or delegate the authority for approval of training to the other State. Further, a transferring State must transfer wages and reimburse the paying State as provided in 20 CFR Part 616, without regard to approval of training by the paying State. The paying State may not refuse to approve training solely because the individual has no (or insufficient) covered wages or employment to qualify for benefits in the paying State.

6. *Action Required.* States are to examine their current law, regulations, and procedures relating to the approval of training for individuals who reside in another State or who have filed either interstate or combined-wage claims and determine whether the current law, regulations, and procedures conform to the requirements of Federal law. If they do not, the State must notify the appropriate Regional Office of the Department of Labor as to how and when the law will be amended or the regulations and procedures changed.

7. *Inquiries.* Inquiries should be directed to your Regional Office.

[FR Doc. 95–27101 Filed 10–31–95; 8:45 am]

BILLING CODE 4510–30–M

[NAFTA–00278; NAFTA–00278C]

ABEPP Acquisition Corporation d/b/a Abbott & Company Marion, Ohio; Lafayette, Georgia; Amended Certification Regarding Eligibility To Apply for NAFTA Transitional Adjustment Assistance

In accordance with Section 250(a), Subchapter D, Chapter 2, Title II, of the Trade Act of 1974, as amended (19 USC 2273), the Department of Labor issued a Certification for NAFTA Transitional Adjustment Assistance on December 16,

1994, applicable to all workers at the subject firm located in Marion, Ohio. The notice was published in the Federal Register on January 3, 1995 (60 FR 149).

New information received from the company shows that worker separations have occurred at the Lafayette, Georgia location of ABEPP Acquisition Corporation, d/b/a Abbott & Company. The workers produce wiring harnesses. The Department is amending the certification to cover these workers.

The intent of the Department's certification is to include all workers of the subject firm who were adversely affected by increased imports.

The amended notice applicable to NAFTA–00278 is hereby issued as follows:

All workers of ABEPP Acquisition Corporation, d/b/a Abbott & Company located in Marion (NAFTA–00278), Ohio, and in Lafayette, Georgia (NAFTA–00278C) who became totally or partially separated from employment on or after December 8, 1993 are eligible to apply for NAFTA–TAA under Section 250 of the Trade Act of 1974.

Signed at Washington, D.C. this 20th day of October 1995.

Russell T. Kile,

Acting Program Manager, Policy and Reemployment Services, Office of Trade Adjustment Assistance.

[FR Doc. 95–27097 Filed 10–31–95; 8:45 am]

BILLING CODE 4510–30–M

[NAFTA—00601]

ABEPP Acquisition Corporation d/b/a/ Abbott & Company LaFayette, Georgia; Notice of Termination of Investigation

Pursuant to Title V of the North American Free Trade Agreement Implementation Act (P.L 103–182) concerning transitional adjustment assistance, hereinafter called (NAFTA–TAA), and in accordance with Section 250(a), Subchapter D, Chapter 2, Title II, of the Trade Act of 1974, as amended (19 USC 2273), an investigation was initiated on September 15, 1995 in response to a petition filed on behalf of workers at ABEPP Acquisition, d/b/a/ Abbott & Company located in Lafayette, Georgia. Workers produce wiring harnesses.

The petitioning group of workers are covered under an existing NAFTA certification (NAFTA–00278). Consequently, further investigation in this case would service no purpose, and the investigation has been terminated.

Signed at Washington, D.C., this 20th day of October 1995.

Russell T. Kile,

Acting Program Manager, Policy and Reemployment Services, Office of Trade Adjustment Assistance.

[FR Doc. 95–27091 Filed 10–31–95; 8:45 am]

BILLING CODE 4510–30–M

[NAFTA–00470]

Seagull Energy Corp./Midcon, Inc. All Locations in the State of Texas; Determinations Regarding Eligibility To Apply for NAFTA Transitional Adjustment Assistance; Correction

This notice corrects the amended certification on petition NAFTA–00470 which was published in the Federal Register on October 5, 1995 (60 FR 52215) in FR Document 95–24774. The Department inadvertently set the impact date as May 18, 1994. The impact date should be May 15, 1994.

The affirmative determination for petition NAFTA–00470 should read: ''Seagull Energy Corporation, Midcon, Inc., operating in various locations in the State of Texas. The certification covers all workers separated on or after May 15, 1994.''

Signed in Washington, D.C., this 20th day of October 1995.

Russell T. Kile,

Acting Program Manager, Policy and Reemployment Services, Office of Trade Adjustment Assistance.

[FR Doc. 95–27099 Filed 10–31–95; 8:45 am]

BILLING CODE 4510–30–M

NATIONAL FOUNDATION ON THE ARTS AND HUMANITIES

Cancellation of Program Panel Meetings

AGENCY: National Endowment for the Humanities.

The meetings of the Humanities Panel scheduled for November 2, 6, and 9, 1995 and published in the Federal Register on October 24, 1995, at page 54522 have been cancelled. The meetings were to review Translations and Editions applications, submitted to the Division of Research Programs, for projects beginning after May 1, 1995.

Sharon I. Block,

Advisory Committee Management Officer.

[FR Doc. 95–27086 Filed 10–31–95; 8:45 am]

BILLING CODE 7536–01–M

NATIONAL SCIENCE FOUNDATION

Membership of National Science Foundation's Senior Executive Service Performance Review Board

AGENCY: National Science Foundation.

ACTION: Announcement of membership of the National Science Foundation's Senior Executive Service Performance Review Board.

SUMMARY: This announcement of the membership of the National Science Foundation's Senior Executive Service Performance Review Board is made in compliance with 5 U.S.C. 4314(c)(4).

ADDRESSES: Comments should be addressed to Director, Division of Human Resource Management, National Science Foundation, Room 315, 4201 Wilson Boulevard, Arlington, VA 22230.

FOR FURTHER INFORMATION CONTACT: Mr. John F. Wilkinson, Jr. at the above address or (703) 306–1180.

SUPPLEMENTARY INFORMATION: The membership of the National Science Foundation's Senior Executive Service Performance Review Board is as follows:

Anne C. Petersen, Deputy Director, Chairperson
Joseph Bordogna, Assistant Director for Engineering
Mary E. Clutter, Assistant Director for Biological Sciences
William C. Harris, Assistant Director for Mathematical and Physical Sciences
Constance K. McLindon, Director, Office of Information and Resource Management
Luther S. Williams, Assistant Director for Education and Human Resources.

Dated: October 26, 1995.

John F. Wilkinson, Jr.,

Director, Division of Human Resource Management.

[FR Doc. 95–27034 Filed 10–31–95; 8:45 am]

BILLING CODE 7555–01–M

NUCLEAR REGULATORY COMMISSION

[Docket No. 50–245]

Northeast Utilities, Millstone Nuclear Power Station, Unit 1; Receipt of Petition for Director's Decision Under 10 CFR 2.206

Notice is hereby given that on August 21, 1995, George Galatis and We the People (Petitioners) submitted a Petition pursuant to 10 CFR 2.206 requesting certain actions associated with spent fuel pool issues at the Millstone Nuclear Power Station, Unit 1. The Petitoners submitted a Supplement to the Petition on August 28, 1995.

The Petitioners allege that Northeast Utilities (NU or the licensee) has knowingly, willingly, and flagrantly operated Millstone Unit 1 in violation of its operating license for approximately 20 years; that it obtained previous licensing amendments through the use of material false statements; and that it presently proposes to continue operating under unsafe conditions rather than comply with the mandates of its license. Specifically, the Petitioners allege that NU has offloaded more fuel assemblies into the spent fuel pool than permitted under License Amendment No. 39 to the Millstone Unit 1 Provisional Operating License and License Amendment No. 40 to the Millstone Unit 1 Full-Term Operating License. The Petitioners further allege that License Amendments Nos. 39 and 40 were based upon material false statements made by NU in documents submitted to the NRC. The Petitioners refer to certain NU submittals allegedly containing the false information, such as NU Safety Assessment Reports (SARs) associated with License Amendments Nos. 39 and 40 and with Systematic Evaluation Program (SEP) Topics IX–1 (fuel storage), IX–5 (ventilation systems), and III–7.B (Design Codes, Design Criteria, Load Combinations and Reactor Cavity Design Criteria).

The Petitioners request a number of actions. The Petitioners seek institution of a proceeding to suspend the operating license for the Millstone Unit 1 facility for a period of 60 days after the unit is brought into compliance with the license and the design basis of the plant. In addition, the Petitioners request that the operating license be revoked until the facility is in full compliance with the terms and conditions of its license. The Petitioners further request that before reinstatement of the license, a detailed independent analysis of the offsite dose consequences of the total loss of spent fuel pool water be conducted. The Petitioners also request that enforcement action be taken against NU pursuant to 10 CFR 50.5 and 50.9.

Finally, the Petitioners request that a proposed license amendment pending before the Commission wherein NU seeks to increase the amount of spent fuel it may offload be denied. In addition, the Petitioners request that the NRC retain an independent expert, at NU's expense, to prepare an SAR on the proposed amendment. The Petitioners also request that before the issuance of any amendment, an analysis of both the probability and the consequences of appropriate events be conducted.

In the Supplement, Mr. Galatis alleges that NU also committed violations by offloading more than one-third of a core of fuel at Millstone Units 2 and 3 and Seabrook Unit 1. In addition, Mr. Galatis alleges with regard to Millstone Unit 3 that NU submitted a material false statement to the NRC associated with a license amendment and that an unanalyzed condition exists with regard to system piping for full-core offload events. With regard to Seabrook Unit 1, Mr. Galatis alleges technical specifications violations associated with criticality analysis.

The Petitioners' requests with regard to any pending license amendment are not within the scope of 10 CFR 2.206. The remaining issues in the Petition are being treated pursuant to 10 CFR 2.206 of the Commission's regulations and have been referred to the Director of the Office of Nuclear Reactor Regulation. As provided by 10 CFR 2.206, appropriate action with regard to these issues will be taken within a reasonable time.

A copy of the Petition is available for inspection at the Commission's Public Document Room, the Gelman Building, 2120 L Street, NW., Washington, DC, and at the local public document room located at the Learning Resource Center, Three Rivers Community-Technical College, Thames Valley Campus, 574 New London Turnpike, Norwich, CT 06360.

Dated at Rockville, Maryland, this 26th day of October 1995.

For the Nuclear Regulatory Commission.

Frank P. Gillespie,

Acting Deputy Director, Office of Nuclear Reactor Regulation.

[FR Doc. 95–27035 Filed 10–31–95; 8:45 am]

BILLING CODE 7590–01–P

OFFICE OF PERSONNEL MANAGEMENT

Excepted Service

AGENCY: Office of Personnel Management.

ACTION: Notice.

SUMMARY: This gives notice of positions placed or revoked under Schedules A and B, and placed under Schedule C in the excepted service, as required by Civil Service Rule VI, Exceptions from the Competitive Service.

FOR FURTHER INFORMATION CONTACT: Patricia Paige, (202) 606–0830.

SUPPLEMENTARY INFORMATION: The Office of Personnel Management published its last monthly notice updating appointing authorities established or revoked under the Excepted Service provisions of 5 CFR 213 on September 28, 1995 (60 FR 50221). Individual authorities established or revoked under Schedules A and B and established under Schedule C between September 1, 1995, and September 31, 1995, appear in the listing below.

Future notices will be published on the fourth Tuesday of each month, or as soon as possible thereafter. A consolidated listing of all authorities as of June 30, will also be published.

Schedule A

No Schedule A authorities were established or revoked in September 1995.

Schedule B

No Schedule B authorities were established or revoked in September 1995.

Schedule C

The following Schedule C authorities were established in September 1995:

Department of Agriculture

Confidential Assistant to the Chief, Forest Service. Effective September 13, 1995.

Confidential Assistant to the Administrator. Effective September 14, 1995.

Staff Assistant to the Administrator, Rural Electrification Administration. Effective September 14, 1995.

Area Director to the Deputy Administrator, State and County Operations. Effective September 14, 1995.

Special Assistant to the Administrator, Agricultural Stabilization Conservation Service. Effective September 22, 1995.

Confidential Assistant to the Administrator, Farmers Home Administration. Effective September 28, 1995.

Department of the Army (DOD)

Confidential Assistant to the Secretary of the Army. Effective September 11, 1995.

Special Assistant for Policy to the Assistant Secretary of Army. Effective September 12, 1995.

Department of Commerce

Special Assistant to the Deputy Assistant Secretary for Intergovernmental Affairs. Effective September 1, 1995.

Confidential Assistant to the Deputy Under Secretary for Policy Development. Effective September 11, 1995.

Confidential Assistant to the Assistant Director for External Affairs. Effective September 11, 1995.

Special Assistant to the Deputy Under Secretary for Policy Development,

International Trade Policy Development. Effective September 12, 1995.

Special Assistant to the Assistant Secretary, Legislative and Intergovernmental Affairs. Effective September 12, 1995.

Special Assistant to the Under Secretary for Technology. Effective September 22, 1995.

Confidential Assistant to the Assistant Secretary and Director General of the U.S. and Foreign Commercial Service, International Trade Administration. Effective September 22, 1995.

Department of Defense

Special Assistant (Programs and Legislation) to the Under Secretary of Defense (Policy). Effective September 1, 1995.

Personal and Confidential Assistant to the Under Secretary of Defense (Policy). Effective September 27, 1995.

Department of Education

Confidential Assistant to the Assistant Secretary, Intergovernmental and Interagency Affairs. Effective September 15, 1995.

Department of Energy

Public Affairs Specialist to the Director of Public and Consumer Affairs. Effective September 29, 1995.

Department of Health and Human Services

Special Assistant to the Administrator, Health Care Financing Administration. Effective September 11, 1995.

White House Liaison to the Chief of Staff. Effective September 11, 1995.

Special Assistant to the Assistant Secretary for Children and Families. Effective September 15, 1995.

Special Assistant to the Secretary, Department of Health and Human Services. Effective September 22, 1995.

Department of Justice

Staff Assistant to the Attorney General. Effective September 7, 1995.

Counselor to the Assistant Attorney General, Antitrust Division. Effective September 11, 1995.

Assistant to the Attorney General. Effective September 11, 1995.

Staff Assistant to the Attorney General. Effective September 13, 1995.

Deputy Director, Office of Public Liaison and Intergovernmental Affairs to the Assistant Attorney General, Office of Legislative Affairs. Effective September 22, 1995.

Special Assistant to the Deputy Attorney General. Effective September 26, 1995.

Associate Deputy Attorney General to the Deputy Attorney General. Effective September 26, 1995.

Special Assistant to the Deputy Attorney General. Effective September 29, 1995.

Department of Labor

Chief of Staff to the Assistant Secretary for Employment and Training. Effective September 14, 1995.

Special Assistant to the Assistant Secretary for Congressional and Intergovernmental Affairs. Effective September 14, 1995.

Advisor to the Assistant Secretary, Mine Safety and Health. Effective September 14, 1995.

Counselor to the Assistant Secretary for Policy. Effective September 22, 1995.

Department of State

Foreign Affairs Officer to the Deputy Assistant Secretary for International Labor, External and Multilateral Affairs. Effective September 1, 1995.

Resources, Plans and Policy Advisor to the Director, Plans and Policy. Effective September 15, 1995.

Department of Transportation

Special Assistant to the Administrator, Federal Railroad Administration. Effective September 27, 1995.

Department of the Treasury

Special Assistant to the Under Secretary for Domestic Finance. Effective September 15, 1995.

Special Assistant to the Assistant Secretary (Legislative Affairs and Public Liaison). Effective September 26, 1995.

Equal Employment Opportunity Commission

Special Assistant to the Director, Office of the Communications and Legislative Affairs. Effective September 1, 1995.

Federal Maritime Commission

Special Assistant to Counsel to the Chairman. Effective September 26, 1995.

General Services Administration

Special Assistant to the Regional Administrator, Great Lakes Region. Effective September 1, 1995.

Pension Benefit Guaranty Corporation

Special Assistant to the Assistant Executive Director for Legislative Affairs. Effective September 29, 1995.

Small Business Administration

Director of International Trade to the Assistant Administrator for International Trade. Effective September 1, 1995.

Special Assistant to the Administrator, Office of Human Resources. Effective September 15, 1995.

Authority: 5 U.S.C. 3301 and 3302; E.O. 10577, 3 CFR 1954–1958 Comp., P.218.

Office of Personnel Management.

Lorraine A. Green,

Deputy Director.

[FR Doc. 95–26947 Filed 10–31–95; 8:45 am]

BILLING CODE 6325–01–M

OFFICE OF THE UNITED STATES TRADE REPRESENTATIVE

Request for Public Comment With Respect to the Annual National Trade Estimate Report on Foreign Trade Barriers

AGENCY: Office of the United States Trade Representative.

ACTION: Notice.

SUMMARY: Pursuant to section 303 of the Trade and Tariff Act of 1984, as amended, USTR is required to publish annually the National Trade Estimate Report on Foreign Trade Barriers (NTE). With this notice, the Trade Policy Staff Committee (TPSC) is requesting interested parties to assist it in identifying significant barriers to U.S. exports of goods, services and overseas direct investment for inclusion in the NTE. Particularly important are impediments materially affecting the actual and potential financial performance of an industry sector. The TPSC invites written comments which provide views relevant to the issues to be examined in preparing the NTE.

DATES: Public comments are due not later than noon on November 30, 1995.

ADDRESSES: Carolyn Frank, Executive Secretary, Trade Policy Staff Committee, Office of the United States Trade Representative, 600 17th Street NW., Room 501, Washington, DC 20508.

FOR FURTHER INFORMATION CONTACT: John Panulas, Associate Director for Policy Coordination, Office of the United States Trade Representative, (202) 395–9599.

SUPPLEMENTARY INFORMATION: The information submitted should relate to one or more of the following nine categories of foreign trade barriers:

(1) Import policies (*e.g.*, tariffs and other import charges, quantitative restrictions, import licensing, and customs barriers);

(2) Standards, testing, labeling, and certification (including unnecessary restrictive application of phytosanitary standards, refusal to accept U.S. certification of conformance to foreign

product standards, and environmental restrictions);

(3) Government procurement (*e.g.*, ''buy national'' policies and closed bidding);

(4) Export subsidies (*e.g.*, export financing on preferential terms and agricultural export subsidies);

(5) Lack of intellectual property protection (*e.g.*, inadequate patent, copyright, and trademark regimes);

(6) Services barriers (*e.g.*, limits on the range of financial services offered by foreign financial institutions, regulations of international data flows, restrictions on the use of data processing, and quotas on imports of foreign films, and barriers to the provision of services by professionals (*e.g.*, lawyers, doctors, accountants, engineers, nurses, etc.));

(7) Investment barriers (*e.g.*, limitations on foreign equity participation and on access to foreign government-funded R&D consortia, local content, technology transfer and export performance requirements, and restrictions on repatriation of earnings, capital, fees and royalties);

(8) Lack of government action against: (a) anticompetitive practices of state-owned and private firms that restrict the sale of U.S. products and services, and (b) corrupt practices (including illicit payments) that may result in lost opportunities for U.S. suppliers of goods and services; and

(9) Other barriers (i.e., barriers that encompass more than one category listed above or that affect a single sector).

In comparison with last year's NTE, we are asking that particular emphasis be placed on any practices that may violate U.S. trade agreements. In addition, this year's report will include information concerning whether foreign governments have in place adequate laws and regulations to combat *corrupt practices*, such as the bribery of public officials, in connection with government purchase and licensing decisions.

We are also interested in receiving any new or updated information pertinent to the barriers covered in last year's report as well as those being added this year. Please note that the information not used in the NTE will be maintained for use in future negotiations.

It is MOST IMPORTANT that your submission contain estimates of the potential increase in exports that would result from the removal of the barrier, as well as a clear discussion of the method(s) by which the estimates were computed. Estimates should fall within the following value ranges: under $5 million; $5 million to $25 million; $25 million to $50 million; $50 million to $100 million; $100 million to $500 million; or over $500 million. Such assessments enhance USTR's ability to conduct meaningful comparative analyses of a barrier's effect over a range of industries.

Please note that interested parties discussing barriers in more than one country should provide a separate submission (i.e., one that is self-contained) for each country.

Written Comments

All written comments should be addressed to: Carolyn Frank, Executive Secretary, Trade Policy Staff Committee, Office of the United States Trade Representative, 600 17th Street N.W., Room 501 Washington, D.C. 20508.

All submissions must be in English and should conform to the information requirements of 15 CFR 2003.

A party must provide ten copies of its submission which must be received at USTR no later than noon on November 30, 1995. If the submission contains business confidential information, ten copies of a non-confidential version must also be submitted. A justification as to why the information contained in the submission should be treated confidentially must be included in the submission. In addition, any submissions containing business confidential information must be clearly marked ''confidential'' at the top and bottom of the cover page (or letter) and of each succeeding page of the submission. The version that does not contain confidential information should also be clearly marked, at the top and bottom of each page, ''public version'' or ''non-confidential.''

Written comments submitted in connection with this request, except for information granted ''business confidential'' status pursuant to 15 CFR 2003.6, will be available for public inspection shortly after the filing deadline. Inspection is by appointment only with the staff of the USTR Public Reading Room and can be arranged by calling (202) 395–6186.

Frederick L. Montgomery,

Chairman, Trade Policy Staff Committee.

[FR Doc. 95–27120 Filed 10–31–95; 8:45 am]

BILLING CODE 3190–01–M

SECURITIES AND EXCHANGE COMMISSION

[Release No. 34–36417; File No. SR–BSE–95–12]

Self-Regulatory Organizations; Boston Stock Exchange, Inc.; Order Granting Approval to Proposed Rule Change and Notice of Filing and Order Granting Accelerated Approval of Amendment No. 1 to Proposed Rule Change Relating to Specialist Concentration

October 25, 1995.

On June 19, 1995, the Boston Stock Exchange, Inc. (''BSE'' or ''Exchange'') submitted to the Securities and Exchange Commission (''Commission''), pursuant to Section 19(b)(1) of the Securities Exchange Act of 1934 (''Act'')[1] and Rule 19b–4 thereunder,[2] a proposed rule change seeking permanent approval of the Exchange's Specialist Concentration Policy.

The proposed rule change was published for comment in the Federal Register on July 25, 1995.[3] No comments were received on the proposal. On October 18, 1995, the BSE submitted Amendment No. 1 to the proposed rule change.[4] This order approves the proposed rule change. In addition, Amendment No. 1 is approved on an accelerated basis.

The Exchange's current policy regarding the concentration of specialist units was first approved by the Commission on a six-month pilot basis ending August 7, 1990.[5] The Commission later approved the renewal of the pilot program for additional one-year periods through September 26, 1995.[6]

The BSE's Specialist Concentration Policy pilot program establishes certain standards based on Consolidated Tape Association (''CTA'') ranking[7] of specialist stocks for reviewing certain proposed mergers, acquisitions, and other combinations between or among specialist units. The proposed policy

[1] 15 U.S.C. 78s(b)(1).

[2] 17 CFR 240.19b–4.

[3] Securities Exchange Act Release No. 35987 (July 18, 1995), 60 FR 38065.

[4] *See* Letter from Karen Aluise, Assistant Vice President, BSE, to Glen Barrentine, Team Leader, SEC (Oct. 13, 1995). Amendment No. 1 is described *infra* at note 8 and accompanying text.

[5] Securities Exchange Act Release No. 27684 (Feb. 7, 1990), 55 FR 5527 (approving File No. SR–BSE–89–05).

[6] *See* Securities Exchange Act Release Nos. 28327 (Aug. 10, 1990), 55 FR 33794 (approving File No. SR–BSE–90–11); 29551 (Aug. 13, 1991), 56 FR 41380 (approving File No. SR–BSE–91–06); 31037 (Aug. 13, 1992), 57 FR 37854 (approving File No. SR–BSE–92–08); 32753 (Aug. 16, 1993), 58 FR 44707 (approving File No. SR–BSE–93–15); and 34716 (Sept. 26, 1994), 59 FR 50026 (approving File No. SR–BSE–94–12).

would authorize those members of the Executive Committee of the Exchange's Board of Governors that are not affiliated with a specialist organization to review proposed combinations that, in the Exchange's view, may lead to undue concentration with the specialist community.[8]

The Executive Committee would review any arrangements where previously separate specialist organizations would be operating under common control and would comprise: 15% or more of the 100 most actively traded CTA stocks; or 15% or more of the second 100 most actively traded CTA stocks; or 20% or more of the third 100 most actively traded CTA stocks; or 15% or more of all the CTA stocks eligible for trading on the BSE where the Free List contains fewer than 100 issues.[9]

The Executive Committee would approve or disapprove the proposed combination based on its assessment of the following considerations: (1) Specialist performance and market quality in the stocks subject to the proposed combination; (2) the likelihood that the proposed combination would strengthen the capital base of the resulting organization, minimize the potential for financial failure and negative consequences of any such failure on the specialist system as a whole, and maintain or increase operational efficiencies; (3) commitment to the Exchange market, focusing on whether the constituent specialist organizations engage in business activities that might detract from the resulting specialist organization's willingness or ability to act to strengthen the Exchange agency/auction market and its competitiveness in relation to other markets;[10] and (4) the effect of the proposed combination on the overall concentration of specialist organizations.

The Exchange has stated previously that the Policy is designed to provide the BSE with a mechanism for reviewing proposed mergers, acquisitions, and other combinations between or among specialist units that may lead to a level of concentration within the specialist community that is detrimental to the Exchange and the quality of its markets.[11] The Exchange expressed its belief that if specialist units were permitted to aggregate control or dominate activity on the Floor of the Exchange: the potential for increasing order flow would be diminished seriously; a disproportionately large number of top quality stocks could be handled by one or a small number of specialist firms; the barriers that new entrants to the specialist business face may increase; the Exchange could become dependant upon one firm for a disproportionately large portion of its revenues; the influence of the larger firms over the policies or direction of the Exchange would increase significantly; competition among specialists for new stock allocations would be reduced; the integrity of the entire stock allocation process would be undermined; and, in general, the incentives for quality markets and higher standards of performance would be reduced.

The Commission finds that the proposed rule change is consistent with the requirements of the Act and the rules and regulations thereunder applicable to a national securities exchange, and, in particular, with the requirements of Section 6(b).[12] In this regard, the Commission deems the proposal consistent with the Section 6(b)(5)[13] requirements that the rules of an exchange be designed to promote just and equitable principles of trade, to prevent fraudulent and manipulative acts, and, in general, to protect investors and the public. The proposal identifies specific levels of review for combinations that could impair market quality and hinder competition to the detriment of investors and the public interest, but still ensures that combinations that are beneficial to the marketplace will not be prohibited.

The Commission believes that in many situations combinations among specialist units can be beneficial for the quality of the market and for the units themselves, particularly those units with limited capital and resources. The Commission, however, recognizes the BSE's concern that undue concentration could result in various negative effects on market quality by, among other things, hampering competition among specialists and reducing incentives for specialists to provide better markets. In addition, the Commission recognizes that, as specialist concentration increases, the continued financial and operational vitality of any one unit will have increased importance on the overall quality of the Exchange's markets and its specialist system as a whole.

Accordingly, in light of the legitimate concentration concerns identified by the BSE, the Commission considers it appropriate for the BSE to have a permanent review policy that authorizes it to monitor specialist combinations to determine their impact upon the competitive environment necessary to maintain an orderly market. Furthermore, the Commission continues to believe the concentration factors contained in the proposal should enable the BSE to identify those combinations that could be harmful to market quality while at the same time not hamper the approval of those combinations that would not result in undue concentration or impair market quality. Finally, the Commission believes that exclusion of affiliated Executive Committee members from participating in the discussions and decision making process concerning specialist combinations should allow the Exchange to avoid a potential conflict of interest situation and result in a fairer decision.

The Commission finds good cause for approving proposed Amendment No. 1 prior to the thirtieth day after the date of publication of notice of filing thereof in the Federal Register. Amendment No. 1 would exclude all members of the Executive Committee who are also

[7] The CTA disseminates last sale transaction information for trades executed on any of the participant exchanges or the Nasdaq Stock Market. The current CTA participants include the New York Stock Exchange (''NYSE''), American Stock Exchange (''Amex''), Chicago Stock Exchange (''CHX''), Philadelphia Stock Exchange (''Phlx''), Pacific Stock Exchange (''PSE''), BSE, Chicago Board Options Exchange (''CBOE''), Cincinnati Stock Exchange (''CSE''), and the National Association of Securities Dealers (''NASD''). Each specialist stock is ranked according to the number of CTA trades in such stock. The ranking is based upon the average volume of trades and shares reported to CTA over the past four quarters. Securities Exchange Act Release No. 35987 (July 18, 1995), 60 FR 38065.

[8] The Executive Committee must be composed of at least five members of the Board, two of whom must be the Chairman and the Vice Chairman. Boston Stock Ex. Const. art. VII, § 2, Boston Stock Ex. Guide (CCH), ¶1202 (July 1993). Amendment No. 1 modifies the BSE's Specialist Concentration Policy such that any member of the Executive Committee that is affiliated with a specialist organization will be prohibited from participating in any discussions or decisions of the Committee in applying this policy.

[9] The Free List is made up of securities that are not registered to certain specialists and can be traded by any specialist.

[10] With respect to the ''commitment to the Exchange market'' criteria, the Executive Committee would look to a variety of factors that extend beyond compliance with the Exchange's requirements for providing sufficient capital, talent, and order handling services. For example, the Committee would review and assess each constituent unit's past performance on the Exchange relating to such matters as: the acceptance and cooperation in the development, implementation, and enhancement of the Boston Exchange Automated Communications and Order Routing Network (''BEACON''); efforts at resolving problems concerning customer orders; willingness to facilitate early openings in order to compete effectively with other exchanges; and willingness to voluntarily provide execution guarantees beyond the minimum required under the Exchange's rules.

[11] *See* Securities Exchange Act Release No. 27684 (Feb. 7, 1990), 55 FR 5527 (approving File No. SR–BSE–89–05).

[12] 15 U.S.C. 78f(b).

[13] 15 U.S.C. 78f(b)(5).

affiliated with specialist organizations from participating in the discussions and decisions concerning proposed specialist combinations. As a result, approval of Amendment No. 1 should result in a fairer and more impartial decision making process. In addition, Amendment No. 1 is similar to rules of other self-regulatory organizations.[14] For these reasons, the Commission finds good cause for accelerating approval of the proposed rule change, as amended.

Interested persons are invited to submit written data, views, and arguments concerning Amendment No. 1. Persons making written submissions should file six copies thereof with the Secretary, Securities and Exchange Commission, 450 Fifth Street, N.W., Washington, D.C. 20549. Copies of the submission, all subsequent amendments, all written statements with respect to the proposed rule change that are filed with the Commission, and all written communications relating to the proposed rule change between the Commission and any person, other than those that may be withheld from the public in accordance with the provisions of 5 U.S.C. § 552, will be available for inspection and copying at the Commission's Public Reference Section, 450 Fifth Street, N.W., Washington, D.C. 20549. Copies of such filing also will be available for inspection and copying at the principal office of the Boston Stock Exchange. All submissions should refer to File No. SR–BSE–95–12 and should be submitted by November 22, 1995.

It therefore is ordered, pursuant to Section 19b)(2) of the Act,[15] that the proposed rule change (SR–BSE–95–12), including Amendment No. 1, is approved.

For the Commission, by the Division of Market Regulation, pursuant to delegated authority.[16]

Margaret H. McFarland,

Deputy Secretary.

[FR Doc. 95–27130 Filed 10–31–95; 8:45 am]

BILLING CODE 8010–01–M

[14] *See, e.g.,* PSE Rule 11.3 (prohibiting committee members from adjudicating any matter in which they have an interest).

[15] 15 U.S.C. 78s(b)(2).

[16] 15 CFR 200.30–3(a)(12).

[Release No. 34–36418; File No. SR–CBOE–95–60]

Self-Regulatory Organizations; Notice of Filing and Immediate Effectiveness of Proposed Rule Change by the Chicago Board Options Exchange, Inc., Relating to the Calculation of Bid/Ask Values for Certain Indexes

October 25, 1995.

Pursuant to Section 19(b)(1) of the Securities Exchange Act of 1934 (''Act''), 15 U.S.C. 78s(b)(1), notice is hereby given that on October 20, 1995, the Chicago Board Options Exchange, Inc. (''CBOE'' or ''Exchange'') filed with the Securities and Exchange Commission (''SEC'' or ''Commission'') the proposed rule change as described in Items I, II and III below, which Items have been prepared by the self-regulatory organization. The Commission is publishing this notice to solicit comments on the proposed rule change from interested persons.

I. Self-Regulatory Organization's Statement of the Terms of Substance of the Proposed Rule Change

The CBOE proposes to amend CBOE Rule 8.7, ''Obligations of Market Makers,'' by adopting Interpretation and Policy .08, which will allow the Exchange or its agent to calculate and disseminate bids and asks for various indexes for the purpose of determining permissible bid/ask differentials for in-the-money options on those indexes. The values will be calculated by determining the weighted average of the bids and asks for the components of the corresponding index.

The text of the proposed rule change is available at the Office of the Secretary, CBOE, and at the Commission.

II. Self-Regulatory Organization's Statement of the Purpose of, and Statutory Basis for, the Proposed Rule Change

In its filing with the Commission, the self-regulatory organization included statements concerning the purpose of and basis for the proposed rule change and discussed any comments it received on the proposed rule change. The text of these statements may be examined at the places specified in Item IV below. The self-regulatory organization has prepared summaries, set forth in sections (A), (B), and (C) below, of the most significant aspects of such statements.

(A) Self-Regulatory Organization's Statement of the Purpose of, and Statutory Basis for, the Proposed Rule Change

Currently, CBOE Rule 8.7(b)(iv) states that the bid/ask differentials provided in CBOE Rule 8.7(b)(iv) shall not apply to in-the-money series where the underlying securities market is wider than the differentials set forth in CBOE Rule 8.7(b)(iv). For those series, CBOE Rule 8.7(b)(iv) provides that the bid/ask differential may be as wide as the quotation on the primary market of the underlying security.

The purpose of the proposal is to permit the bid/ask values of certain indexes, as calculated by the CBOE or its authorized agent, to be used to determine the allowable bid/ask differential for options on the corresponding index, as is currently permitted under CBOE Rule 8.7(b) for equity options. The indexes for which the Exchange currently will provide bid/ask values are the CBOE Biotech Index, the Standard & Poor's (''S&P'') Banking Index, the S&P Chemicals Index, the CBOE Computer Software Index, the CBOE Environmental Index, the CBOE Gaming Index, the S&P Health Care Index, the S&P Insurance Index, the CBOE Israel Index, the CBOE Mexico Index, the S&P Retail Index, the S&P Transportation Index, the S&P Telecommunications Index, the CBOE Global Telecommunications Index, and the CBOE Real Estate Investment Trust (''REIT'') Index. The CBOE may make additions or deletions to this list as conditions warrant. The CBOE represents that any additions to the list will be communicated to the Exchange's membership by means of a regulatory circular.

The Exchange notes that CBOE Rule 8.7 specifies the obligations of a market maker in maintaining a fair and orderly market, including pricing option contracts fairly. In order to price option contracts fairly, CBOE Rule 8.7(b) requires market makers to make bids and offers so that a difference of no more than ¼ of $1 is created between the bid and offer for each option contract for which the bid is less than $2. The allowable differential between the bid and the offer increases in steps as the price of the bid increases, so that the bid/ask differential can be as large as $1 where the bid is more than $20. An exception exists with respect to these specified numerical differentials, however, for in-the-money option series where the underlying securities market is wider than the differentials set forth in CBOE Rule 8.7(b). For these series, CBOE Rule 8.7(b)(iv) permits the bid/

ask differential on the option to be as wide as the quotation on the market of the ''underlying security.''

According to the CBOE, the language of CBOE Rule 8.7(b)(iv), which permits spreads on the options to be as wide as the spread on the underlying security, does not apply to the indexes traded on the CBOE because these indexes are not ''underlying securit[ies].'' As a result, the Exchange states that it generally has required market makers in options on these indexes to a maintain bid/ask differential in line with the specified numerical differentials set forth in CBOE Rule 8.7(b)(iv). [1] For a variety of reasons, however, the Exchange notes that bid/ask values on the components of the index may be quite wide. As a result, market makers may be discouraged from making quotes on options on these indexes if they are forced to make quotes within narrow spreads. [2] The liquidity in these options will in turn be affected.

To protect market makers from having to make bid/ask quotes on the index options that have an inordinately small differential in comparison to the bid/ask differentials of the components of the index, the Exchange proposes to add Interpretation and Policy .08 to Exchange Rule 8.7. This interpretation will permit the Exchange to disseminate an index bid/ask differential to provide a basis for an exception to the numerical limits provided in CBOE Rule 8.7(b)(iv) for in-the-money option series, thus giving the market makers of these index options the same protections offered by CBOE Rule 8.7(b)(iv) to equity option market makers. The Exchange states that it will nonetheless encourage its market makers to make markets as narrow as possible in these indexes, particularly in the lower priced series.

The CBOE recognizes that in the limited circumstances of a slightly in-the-money index option approaching expiration, the index bid/ask differential may not be an appropriate measure for the maximum permitted bid/ask spread on the option. However, the Exchange does not expect the adoption of proposed Interpretation and Policy .08 to result in unduly wide spreads for index options in this circumstance. Instead, the Exchange is confident that competition among market makers on the Exchange and, in the case of multiply listed options, on other exchanges, together with arbitrage possibilities that would exist if the spreads for slightly in-the-money options were to become too wide, will act to keep bid/ask spreads for index options within narrow limits even in the circumstances where proposed Interpretation and Policy .08 would appear to allow wider spreads. The Exchange notes that this has been the CBOE's experience under existing CBOE Rule 8.7(b)(iv) as it applies to high priced stocks in the $300 to $700 range, where CBOE Rule 8.7(b)(iv) might also appear to permit unrealistically wide spreads for low-priced, slightly in-the-money options, but where in fact spreads have remained within reasonably narrow limits.

To calculate the bid/ask values on these certain indexes, the Exchange or its agent will calculate a bid and an ask for the index that is simply a weighted average of the bids and asks of the components of the index. These values will be calculated in the same method that the index itself is calculated. For example, if the index is calculated by a price-weighted method using the closing prices, then the bids and asks on the index will be calculated using the same formula and the same weights but using the last bids and the last asks, respectively, instead of the closing price. These index bid/ask values will then be disseminated to the public and to the trading floor by way of the Options Price Reporting Authority (''OPRA''). OPRA has represented that it has the capacity to disseminate these values.[3]

The CBOE notes that although the Exchange will disseminate bid/ask values in the indexes, it will not make a market in the underlying basket of stocks representing the indexes. In addition, the Exchange represents that although it will take appropriate precautions to assure the accuracy of the bid/ask values which it disseminates, the CBOE will not guarantee the accuracy of the bid/ask values because the calculations necessarily require the collection of data from many sources. Consequently, the Exchange is also specifying in proposed Interpretation and Policy .08 that the Exchange will not be liable for any errors, omissions, or delays in the provision or calculation of the index bids and asks. The Exchange believes that this limitation of liability is reasonable because it is consistent with the current limitation of liability for the calculation of the index itself and because these values are being provided only for the express and limited purpose of determining permissible bid/ask differentials.

The CBOE believes that the proposed rule change will contribute to more liquid markets in the options on the indexes by providing market makers in these series with the same protections that are afforded market makers in equity options. Therefore, the CBOE believes that the proposal is consistent with Section 6(b) of the Act, in general, and, in particular, with Section 6(b)(5), in that it provides rules designed to perfect the mechanisms of a free and open market and to protect investors and the public interest.

(B) Self-Regulatory Organization's Statement on Burden on Competition

The CBOE does not believe that the proposed rule change will impose any burden on competition.

(C) Self-Regulatory Organization's Statement on Comments on the Proposed Rule Change Received From Members, Participants or Others

No written comments were either solicited or received with respect to the proposed rule change.

III. Date of Effectiveness of the Proposed Rule Change and Timing for Commission Action

Because the foregoing rule change: (1) does not significantly affect the protection of investors or the public interest; (2) does not impose any significant burden on competition; (3) was provided to the Commission for its review at least five business days prior to the filing date; and (4) does not become operative for 30 days after October 20, 1995, it has become effective pursuant to Section 19(b)(3)(A) of the Act and Rule 19b–4(e)(6) thereunder. In particular, the Commission believes that the proposal does not significantly affect the protection of investors or the public interest and does not impose any significant burden on competition. At any time within 60 days of the filing of such proposed rule change, the Commission may summarily abrogate such rule change if it appears to the Commission that such action is necessary or appropriate in the public

[1] Under CBOE rule 8.7(b)(iv), the CBOE's Market Performance Committee may establish differences other than those stated in paragraph (iv) for one or more option series.

[2] The CBOE states that if market makers are required to make markets that are narrower than the underlying index, they will have difficulty in profitably hedging their positions with a basket in the underlying securities if it is necessary to do so.

[3] *See* Memorandum from Joseph Corrigan, Executive Director, OPRA, to Eileen Smith, dated September 20, 1995 (''September 20 Memorandum''). Specifically, in its September 20 Memorandum, OPRA represents that is has the capacity to disseminate underlying index values based on the bid and ask values of the stocks in the index for the indexes that the CBOE is currently authorized to send to OPRA. In addition, the September 20 Memorandum states that for new index filings, OPRA will review its capacity when the filing is made. Accordingly, the Commission expects the CBOE to obtain a capacity representation from OPRA prior to listing bid/ask differentials for a new index.

interest, for the protection of investors, or otherwise in furtherance of the purposes of the Act.

IV. Solicitation of Comments

Interested persons are invited to submit written data, views and arguments concerning the foregoing. Persons making written submissions should file six copies thereof with the Secretary, Securities and Exchange Commission, 450 Fifth Street, N.W., Washington, D.C. 20549. Copies of the submission, all subsequent amendments, all written statements with respect to the proposed rule change that are filed with the Commission, and all written communications relating to the proposed rule change between the Commission and any person, other than those that may be withheld from the public in accordance with the provisions of 5 U.S.C. 552, will be available for inspection and copying at the Commission's Public Reference Section, 450 Fifth Street, N.W., Washington, D.C. Copies of such filing will also be available for inspection and copying at the principal office of the above-mentioned self-regulatory organization. All submissions should refer to the file number in the caption above and should be submitted by November, 22, 1995.

For the Commission, by the Division of Market Regulation, pursuant to delegated authority.[4]

Margaret H. McFarland,

Deputy Secretary.

[FR Doc. 95–27132 Filed 10–31–95; 8:45 am]

BILLING CODE 8010–01–M

[Release No. 34–36420; File No. SR–CBOE–95–66]

Self-Regulatory Organizations; Notice of Filing and Immediate Effectiveness of Proposed Rule Change by the Chicago Board Options Exchange, Incorporated, Relating to the Increase in the Retail Automatic Execution System Order Size Limit for Performance Systems International, Inc.

October 26, 1995.

Pursuant to Section 19(b)(1) of the Securities Exchange Act of 1934 (''Act''),[1] and Rule 19b–4 thereunder,[2] notice is hereby given that on October 26, 1995, the Chicago Board Options Exchange, Incorporated (''CBOE'' or ''Exchange'') filed with the Securities and Exchange Commission (''Commission'') the proposed rule change as described in Items I, II, and III below, which Items have been prepared by the Exchange. The Commission is publishing this notice to solicit comments on the proposed rule change from interested persons.

I. Self-Regulatory Organization's Statement of the Terms of Substance of the Proposed Rule Change

The Exchange proposes to increase the size of orders eligible for entry into its Retail Automatic Execution System (''RAES'') for all classes in Performance Systems International, Inc. This action was recommended by the Exchange's Equity Floor Procedure Committee (''EFPC'') in order to match the size of orders eligible for entry into the Philadelphia Stock Exchange's automatic execution system for the same option classes. The text of the proposed rule change is available at the Office of the Secretary, the Exchange, and at the Commission.

II. Self-Regulatory Organization's Statement of the Purpose of, and Statutory Basis for, the Proposed Rule Change

In its filing with the Commission, the Exchange included statements concerning the purpose of and basis for the proposed rule change. The text of these statements may be examined at the places specified in Item IV below. The Exchange has prepared summaries, set forth in Section (A), (B), and (C) below, of the most significant aspects of such statements.

(A) Self-Regulatory Organization's Statememt of the Purpose of, and Statutory Basis for, the Proposed Rule Change

As of October 26, 1995, the Exchange and the Philadelphia Stock Exchange, Inc. (''Phlx'') will begin trading equity options on Performance Systems International, Inc. The NASDAQ stock symbol for Performance Systems International is ''PSIX'' and the option symbol is ''SQP.''

The Phlx will impose a twenty-five (25) contract order size limit for orders that are eligible for entry into its automatic execution system, Auto-EX.[3] CBOE Rule 6.8 permits the CBOE's EFPC to set an order size limit of up to twenty (20) contracts. However, CBOE Rule 6.8, Interpretation .01 allows the EFPC to set a limit higher than twenty to the extent necessary to match the order size eligible for entry into the automatic execution system of any other options exchange on which the multiply traded option is traded, provided that notice of the increase has been filed with the Commission pursuant to Section 19(b)(3)(A) of the Act. In order to better compete with Phlx for orders in SQP, the EFPC has recommended to the Exchange that it make this filing to increase the order size eligible for entry in RAES for equity options in SQP to twenty-five (25) contracts. The CBOE believes that it has more than adequate system capacity and market-making capacity to handle the increase in the eligible RAES order size for Performance Systems International, Inc. options.

The Exchange believes that the proposed rule change is consistent with Section 6(b) of the Act in general and furthers the objectives of Section 6(b)(5) in particular in that it is designed to prevent fraudulent and manipulative acts and practices, to promote just and equitable principles of change, to foster cooperation and coordination with persons engaged in facilitating transactions in securities, and to remove impediments to and perfect the mechanism of a free and open market and a national market system.

(B) Self-Regulatory Organization's Statement on Burden on Competition

The Exchange does not believe that the proposed rule change will impose any burden on competition.

(C) Self-Regulatory Organization's Statement on Comments on the Proposed Rule Change Received From Members, Participants or Others

No written comments were solicited or received with respect to the proposed rule change.

III. Date of Effectiveness of the Proposed Rule Change and Timing for Commission Action

Because the foregoing rule change constitutes a stated interpretation with respect to the meaning, administration, or enforcement of an existing rule, it has become effective pursuant to Section 19(b)(3)(A), and Rule 19b–4 thereunder. At any time within 60 days of the filing of the proposed rule change, the Commission may summarily abrogate such rule change if it appears to the Commission that such action is necessary or appropriate in the public interest, for the protection of investors, or otherwise in furtherance of the purposes of the Act.

---

[4] 17 CFR 200.30–3(a)(12) (1994).

[1] 15 U.S.C. 78s(b)(1).

[2] 17 CFR 240.19b–4.

[3] *See* Securities Exchange Act Release No. 32906 (September 15, 1993) 58 FR 49345 (September 22, 1993) (order approving Phlx's proposal to expand the order eligibility size of Auto-EX to twenty-five (25) contracts for all equity options).

IV. Solicitation of Comments

Interested persons are invited to submit written data, views and arguments concerning the foregoing. Persons making written submissions should file six copies thereof with the Secretary, Securities and Exchange Commission, 450 Fifth Street, N.W., Washington, D.C. 20549. Copies of the submission, all subsequent amendments, all written statements with respect to the proposed rule change that are filed with the Commission, and all written communications relating to the proposed rule change between the Commission and any person, other than those that may be withheld from the public in accordance with the provisions of 5 U.S.C. § 552, will be available for inspection and copying at the Commission's Public Reference Section, 450 Fifth Street, N.W., Washington, D.C. 20549. Copies of such filing will also be available for inspection and copying at the principal office of the CBOE. All submissions should refer to SR–CBOE–95–66 and should be submitted by November 22, 1995.

For the Commission, by the Division of Market Regulation, pursuant to delegated authority.[4]

Margaret H. McFarland,

Deputy Secretary.

[FR Doc. 95–27133 Filed 10–31–95; 8:45 am]

BILLING CODE 8010–10–M

[Release No. 34–36415; International Series Release No. 877; File No. SR–CBOE–95–45]

Self-Regulatory Organizations; Chicago Board Options Exchange, Inc.; Order Approving Proposed Rule Change Relating to the Listing and Trading of Options on the CBOE Mexico 30 Index

October 25, 1995.

On August 21, 1995, the Chicago Board Options Exchange, Inc. (''CBOE'' or ''Exchange'') submitted to the Securities and Exchange Commission (''SEC'' or ''Commission''), pursuant to Section 19(b) of the Securities Exchange Act of 1934 (''Act''),[1] and Rule 19b–4 thereunder,[2] a proposed rule change to list and trade options on the CBOE Mexico 30 Index (''Mexico 30 Index'' or ''Index''), a broad-based, modified capitalization weighted index comprised of thirty Mexican stocks. On August 25, 1995, the CBOE submitted Amendment No. 1 to the proposal to establish additional Index maintenance criteria.[3] Notice of the proposed rule change and Amendment No. 1 thereto appeared in the Federal Register on September 1, 1995.[4] No comments were received on the proposal. This order approves the proposal, as amended.

I. Description of the Proposal

The purpose of the proposed rule change is to permit the Exchange to list and trade cash-settled, European-style stock index options on the Mexico 30 Index.[5] The Index is comprised of 30 representative stocks traded on the Mexican Stock Exchange (''Bolsa'').[6] The CBOE represents that the Index is deemed to be a broad-based index under Rule 24.1(i)(1).

A. Index Design

The Index was designed by and is maintained by the CBOE and the Chicago Mercantile Exchange (''CME''). CBOE represents that the 30 stocks comprising the Index were selected for their high market capitalization and their high degree of liquidity, and further believes that they are representative of the industrial composition of the broader Mexican equity market. The Mexico 30 Index is composed of 15 broad industry groups, including building materials, diversified holding companies, telecommunications, mining and beverages.

The Index is weighted by the market capitalization of the component stocks. However, the CBOE will adjust the Index on a semi-annual basis (occurring after the close on expiration Fridays in December and June), if necessary, to ensure that no single component shall have a weight in the Index greater than 25%, and that the top three weighted component stocks in the Index do not account for more than 45% of the weight of the Index.[7] For example, on June 16, 1995, the most recent review date, Telefonos de Mexico (''TMX'') would have had a weight of 30.41% of the Index. To reduce TMX's weight, the Exchange reduced the number of outstanding TMX shares used in the calculation of the Index from 8.0375 billion to 6.1303 billion. As of July 31, 1995, TMX represented 23.61% of the Index value.

The average daily capitalization of the Index for the year ended July 31, 1995 was $58.2 billion.[8] The median capitalization of the stocks in the Index on July 31, 1995, was 4.507 billion pesos ($737 million at the exchange rate of 6.115 pesos per dollar prevailing on July 31, 1995). The average market capitalization of these stocks was $1.54 billion on the same date (using the same rate of exchange). The individual market capitalization of these stocks ranged from $156 million (Grupo Sidek-B) to $13.3 billion (TMX) on the same date. The largest stock accounted for 23.61% of the Index, while the smallest accounted for 0.36%. The top five stocks in the Index by weight accounted for 55.02% of the Index. The average daily trading volume in the component securities for the period from February 1995 through July 1995, ranged from a low of approximately 9,270 shares to a high of 14,123,392 shares, with an average daily trading volume for all components of the Index of approximately 1,479,390 shares per day.

B. Calculation and Maintenance of Index

The value of the Index is determined by multiplying the price of each stock times the number of shares outstanding, adding those sums and dividing by a divisor which gives the Index a value of 200 on its base date of January 3, 1995. The Index had a closing value of 203.07 on July 31, 1995. The Index will be maintained by the CBOE and CME and, in order to maintain continuity of the Index, the divisor of the Index will be adjusted to reflect certain events relating to the component stocks. These events include, but are not limited to, changes in the number of shares outstanding, spin-offs, certain rights issuances, and mergers and acquisitions. In addition, as noted above, CBOE will maintain the Index to ensure that no one component, or the top three components, represent more than 25% or 45% of the weight of the Index, respectively. Any changes to the composition of the Index which are made as a result of these maintenance standards will be done on a semi-annual

---

[4] 17 CFR 200.30–3(a)(12).

[1] 15 U.S.C. 78s(b)(1) (1988 & Supp. V 1993).

[2] 17 CFR 240.19b–4 (1994).

[3] *See* Letter from Eileen Smith, CBOE, to Steve Youhn, SEC, dated August 25, 1995.

[4] *See* Securities Exchange Act Release No. 36160 (Aug. 28, 1995), 60 FR 45755.

[5] A European-style option may only be exercised during a specified period before expiration.

[6] The components of the Index are Alfa SA–A; Apasco SA; Grupo Casa Autrey; Banacci-B; Grupo Carso-A1; Controla Com M–B; Cemex SA–B; Cifra SA–C; Desc SA–B; Empresas Moderna-A; Fomento Econ M–B; Grupo Embotelladoro Mexico; Grupo Financiero Bancomer-B; Grupo Financiero Serfin-B; Grupo Gigante; Grupo Modelo-C; Grupo Mexico-B; Grupo Tribasa-CPO; Hylsamex SA–BCP; Empresas ICA; Iusacell; Kimberly-Clark M–A; Coca-Cola Femsa; Grupo Industrial Maseca-B; Grupo Sidek-B; Tubos de Acero; Telefonos de Mexico-L; Tolmex SA–B2; Grupo Telev-CPO; and Vitro SA.

[7] *See* Amendment No. 1. As of July 31, 1995, the top three stocks represented 43.6% of the weight of the Index.

[8] On July 31, 1995, the total capitalization of the Index was $46.21 billion, which represented 49.35% of the overall capitalization of the Mexican Bolsa.

basis in December and June of each year.

The composition of the Index will be reviewed periodically and the CBOE and CME may make component changes at any time to ensure that the Index continues to represent the overall character of the Mexican equity market. When considering replacement stocks, CBOE and CME will choose from among the most heavily capitalized and actively traded stocks on the Bolsa.[9] In addition, CBOE and CME will consider other factors including industry grouping, level of foreign accessibility (*i.e.,* whether foreigners may purchase the stock), name recognition, and volatility.

C. Index Option Trading

The Exchange also proposes to base trading in options on the Index on the full value of the Index as expressed in U.S. dollars. The Exchange also may provide for the listing of full-value long-term index option series (''LEAPS®'') and reduced-value LEAPS on the Index. For reduced-value LEAPS, the underlying value would be computed at one-tenth of the value of the Index. The current and closing index value of any such reduced-value LEAP will, after such initial computation, be rounded to the nearest one-hundredth. The Exchange will list expiration months for Mexico 30 Index options and Index LEAPS in accordance with CBOE Rule 24.9.

The trading hours for options on the Index will be from 8:30 a.m. Chicago time to 3:15 Chicago time. Bridge Information Systems (''Bridge'') will calculate the value of the Index every fifteen seconds throughout the trading day and disseminate the Index value through the Options Price Reporting Authority (''OPRA'').[10] Bridge obtains quotes and trade information on a real-time basis directly from the Bolsa through an electronic feed. The trading hours of the Bolsa are the same as those of the New York Stock Exchange, 8:30 a.m. through 3:00 p.m. Chicago time. Accordingly, the value of the Index will be based upon the prices of the components as traded or quoted on the Bolsa.[11]

The Exchange is proposing to establish position limits for Mexico 30 Index options equal to 50,000 contracts on the same side of the market, with no more than 30,000 contracts in the series with the nearest expiration date. According to the Exchange, these limits are roughly equivalent, in dollar terms, to the limits applicable to options on other indices. Ten reduced-value options will equal one full-value contract for such purposes. Furthermore, the hedge exemption rule applicable to broad-based index options, Commentary .01 to CBOE Rule 24.4, will apply to Mexico 30 Index options.[12]

CBOE also represents that it has the necessary systems capacity to support new series that would result from the introduction of Mexico 3 0 Index options. CBOE has been informed that OPRA has the capacity to support such new series.[13]

D. Exercise and Settlement

The proposed options on the Index will expire on the Saturday following the third Friday of the expiration month and trading in the expiring contract month on CBOE will normally cease on Friday at 3:15 p.m. (Chicago time) unless a holiday occurs. The exercise settlement value of Index options at expiration will be determined from closing prices established at the close of the regular Friday trading sessions in Mexico. If a stock does not trade during this interval or if it fails to open for trading, the last available price of the stock will be used in the calculation of the Index. When expirations are removed in accordance with Exchange holidays, such as when the CBOE is closed on the Friday before expiration, the last trading day for expiring options will be Thursday and the exercise settlement value of Index options at expiration will be determined at the close of the regular Thursday trading sessions in Mexico even if the Mexican markets are open on Friday. If the Mexican markets are closed on the Friday before expiration but the CBOE is open for trading, the last trading day for expiring options will similarly be Thursday, with the exercise settlement value being determined from Thursday closing prices on the Bolsa.

E. Surveillance

The Exchange will apply its existing index option surveillance procedures to Index options. In addition, the Exchange is aware of a Memorandum of Understanding (''MOU'') between the Commission and the Mexican Comision Nacional Bancaria y de Valores (''CNBV''). As discussed below, this MOU will enable the Commission to obtain information concerning the trading of the component stocks of the Mexico 30 Index. As discussed below, the Exchange will seek to enter into an effective surveillance agreement with the Bolsa.

II. Findings and Conclusions

The Commission finds that the proposed rule change is consistent with the requirements of the Act and the rules and regulations thereunder applicable to a national securities exchange, and, in particular, the requirements of Section 6(b)(5).[14] The Commission finds that the trading of options based on the Mexico 30 Index, including long-term options based on either the full or a reduced value of the Index, will serve to protect investors, promote the public interest, and help to remove impediments to a free and open securities market by providing investors with a means to hedge exposure to market risk associated with the Mexican equity market and provide a risk management instrument for positions in the Mexican securities market.[15] The trading of options on the Index will permit investors to participate in the price movements of the 30 Mexican equity securities underlying the Index. As a result, the trading of options on the Index will allow investors holding some or all of the securities underlying the Index to hedge the risks associated with those positions. Thus, the trading of options based on the Mexico 30 Index will provide investors with a valuable hedging vehicle that should reflect accurately the overall movement of the Mexican equity market.

The trading of Index options and Index LEAPS on the Mexico 30 Index, however, raises several issues related to index design and structure, customer protection, and surveillance. The Commission believes, however, for the reasons discussed below, that the CBOE has adequately addressed these issues.

A. Index Design and Structure

The Commission finds that it is appropriate and consistent with the Act to apply the Exchange rules applicable

[9] *See* Letter from William M. Speth, Jr., CBOE, to Steve Youhn, SEC, dated October 23, 1995.

[10] *See* Amendment No. 1.

[11] As noted above Mexico Index options will continue to trade for 15 minutes after the Bolsa closes. This is consistent with trading times for other index options and also gives market participants the opportunity to adjust their positions after the Bolsa closes.

[12] Telephone Conversation between Patricia Cerny, Market Surveillance, CBOE, and Stephen M. Youhn, SEC, on October 18, 1995.

[12] *See* Letter from Joe Corrigan, OPRA, to Eileen Smith, CBOE, dated August 1, 1995.

[14] 15 U.S.C. § 78f(b)(5) (1988 & Supp. V 1993).

[15] Pursuant to Section 6(b)(5) of the Act, the Commission must predicate approval of rule changes pertaining to any new option proposal upon a finding that the introduction of such new derivative instrument is in the public interest. Such a finding would be difficult for a derivative instrument that served no hedging or other economic function, because any benefits that might be derived by market participants likely would be outweighed by the potential for manipulation, diminished public confidence in the integrity of the markets, and other valid regulatory concerns.

to broad-based index options to the Index options.[16] First, the Index consists of 30 of the most actively traded stocks on the Bolsa.[17] Second, stocks in the Index are among the most highly capitalized stocks on the Bolsa. For example, on July 31, 1995, the market capitalization of the individual stocks in the Index ranged from a high of $13.3 billion to a low of $156 million, with a mean value of U.S. $1.54 billion. Third, the average daily capitalization of the Index, for the year-ended July 31, 1995, was U.S. $58.2 billion.[18] While this figure is smaller than other previously approved broad-based indexes on U.S. securities, it is nonetheless a substantial capitalization for a foreign market and represents almost half of the total capitalization of the Bolsa.[19] Fourth, the Index includes stocks of companies from fifteen separate industries, with no industry segment comprising more than 25% of the Index's total value. Fifth, CBOE maintenance criteria require that no single index component shall comprise more than 25% of the Index's total value and that the percentage weighting of the three largest issues in the Index shall not exceed 45% of the Index's value. This will help to ensure that a single stock or small group of stocks does not dominate the Index. Sixth, the Index component stock listing and maintenance criteria will serve to ensure that the Index maintains its broad representative sample of stocks on the Bolsa. In addition, the maintenance criteria will ensure that the Index continues to be comprised of component stocks that are among the most highly capitalized and actively traded stocks on the Bolsa. Accordingly, the Commission believes it is appropriate to classify the Index as broad-based.

Furthermore, the Commission believes that the general broad diversification of the Index component stocks, as well as their high capitalizations and trading activity, minimize the potential for manipulation of the Index. First, as discussed above, the Index represents a broad cross-section of highly-capitalized Mexican stocks, with no single industry group or stock dominating the Index. Second, the stocks that comprise the Index are relatively actively traded. Third, the Commission believes that the index selection and maintenance criteria will serve to ensure that the Index continues to represent stocks with the highest capitalizations and trading volumes on the Bolsa. In addition, the Exchange has proposed position and exercise limits for the Index options that are consistent with other broad-based index options.

B. Customer Protection

The Commission believes that a regulatory system designed to protect public customers must be in place before the trading of sophisticated financial instruments, such as Mexico 30 Index options and Index LEAPS, can commence on a national securities exchange. The Commission notes that the trading of standardized exchange-traded options occurs in an environment that is designed to ensure, among other things, that: (1) The special risks of options are disclosed to public customers; (2) only investors capable of evaluating and bearing the risks of options trading are engaged in such trading; and (3) special compliance procedures are applicable to options accounts. Accordingly, because the Index options and Index LEAPS will be subject to the same regulatory regime as the other standardized options currently traded on the CBOE, the Commission believes that adequate safeguards are in place to ensure the protection of investors in Mexico 30 Index options and Index LEAPS.[20]

C. Surveillance

In evaluating derivative instruments, the Commission, consistent with the protection of investors, considers the degree to which the derivative instrument is susceptible to manipulation. The ability to obtain information necessary to detect and deter market manipulation and other trading abuses is a critical factor in the Commission's evaluation. It is for this reason that it is important that the SEC determine that there is an adequate mechanism in place to provide for the exchange of information between the market trading the derivative product and the market on which the securities underlying the derivative product are traded. Such mechanisms enable officials to surveil trading in both the derivative product and the underlying securities.[21] For foreign stock index derivative products, such mechanisms are especially important for the relevant foreign and domestic exchanges to facilitate the collection of necessary regulatory, surveillance and other information.

With respect to the CBOE proposal, CBOE and the Bolsa do not have a written surveillance sharing agreement that covers the trading of Mexico 30 Index options at this time.[22] Moreover, it is the Commission's understanding that the Bolsa currently is not able to provide the requisite information for a comprehensive surveillance sharing instrument. Thus it would be impossible for the CBOE to secure a comprehensive agreement. In such cases, the Commission has relied in the past on surveillance sharing arrangements between the relevant regulators. In regard to the Index, first, the Commission notes that the Bolsa is under the regulatory oversight of the CNBV, which has responsibility for both the Mexican securities and derivatives markets. The Commission and the CNBV have concluded a Memorandum of Understanding, dated October 18, 1990, that provides a framework for mutual assistance in investigatory and regulatory issues.[23] Based on the relationship between the SEC and CNBV and the terms of the MOU, the Commission understands that both it and the CNBV could acquire information from and provide information to the other similar to that which would be required in a comprehensive surveillance sharing agreement between exchanges.[24] Moreover, the agencies could make a request for information under the MOU

[16] In addition, the reduced value Mexico 30 Index, which is comprised of the same component securities as the Index, and calculated by dividing the Index by ten, is essentially identical to the Mexico 30 Index.

[17] While some of the stocks in the Index have relatively low trading volume, they account for a small percentage of the Index weighting.

[18] In the event the aggregate capitalization of the Index falls below $30 billion, the CBOE will consult with the Commission regarding appropriate regulatory responses.

[19] A foreign index capitalization that is smaller than that of the Mexico Index would raise questions regarding whether that particular index warranted broad-based index options treatment.

[20] In addition, CBOE has represented that it and OPRA have the necessary systems capacity to support those new series of options that would result from the introduction of Index options and Index LEAPS. *See* Memorandum from Joe Corrigan, Executive Director, OPRA, to Eileen Smith, CBOE, dated August 1, 1995.

[21] The Commission believes that a comprehensive surveillance sharing agreement should provide the parties thereto with the ability to obtain information necessary to detect and deter market manipulation and other trading abuses. Consequently, the Commission generally requires that such agreements require that the parties provide each other, upon request, with information about market trading activity, clearing activity, and the identity of the purchasers and sellers of securities underlying the derivative product. *See, e.g.,* Securities Exchange Act Release No. 31529 (Nov. 27, 1992), 57 FR 574248.

[22] The CBOE has committed to make every effort to enter into a comprehensive surveillance sharing agreement with the Bolsa.

[23] The CNBV is the successor to the Comision Nacional de Valores of Mexico, which was merged with the Mexican Ranking Commission in April 1995 to form the CNBV. *See* National Banking and Securities Commission Act, Mexico, dated April 24, 1995.

[24] This information could include transaction, clearing, and customer identity information necessary to conduct an investigation.

on behalf of an SRO that needed the information for regulatory purposes. Thus, should the CBOE need information on Mexican trading in the Index component securities to investigate incidents involving trading of Index options, the SEC could request such information from the CNBV under the MOU. While this arrangement certainly would be enhanced by the existence of direct exchange to exchange surveillance sharing agreements, it is nonetheless consistent with other instances where the Commission has explored alternatives when the relevant foreign exchange was unwilling or unable to enter into a comprehensive surveillance sharing agreement.[25]

Accordingly, the Commission believes the MOU provides sufficient basis for the exchange of necessary surveillance information. The Commission continues to believe strongly, however, that the Bolsa and the CBOE should continue to work together to consummate a formal surveillance sharing agreement to cover Mexico 30 Index options as soon as practicable.

It therefore is ordered, pursuant to section 19(b)(2) of the Act,[26] that the proposed rule change (SR–CBOE–95–45) is approved, as amended.

For the Commission, by the Division of Market Regulation, pursuant to delegated authority.[27]

Margaret H. McFarland,

Deputy Secretary.

[FR Doc. 95–27003 Filed 10–31–95; 8:45 am]

BILLING CODE 8010–01–M

[25] *See, e.g.,* Securities Exchange Act Release No. 36070 (Aug. 9, 1995), 60 FR 42205 (Aug. 15, 1995) (Order Approving Proposed Rule Changes Relating to the Listing and Trading of Warrants on the Deutscher Aktienindex).

[26] 15 U.S.C. § 78s(b)(2) (1988).

[27] 17 CFR 200.30–3(a)(12) (1994).

[Release No. 34–36425; File No. SR–DTC–94–16]

Self-Regulatory Organizations; The Depository Trust Company; Notice of Filing of Amendment to a Proposed Rule Change Clarifying the Depository Trust Company's Policy on Depository-to-Depository Services and Fees

October 26, 1995.

Pursuant to Section 19(b)(1) of the Securities Exchange Act of 1934 (''Act''),[1] notice is hereby given that on November 29, 1994, The Depository Trust Company (''DTC'') filed with the Securities and Exchange Commission (''Commission'') the proposed rule change (File No. SR–DTC–94–16) as described in Items I, II, and III below, which Items have been prepared primarily by DTC. Notice of the proposal was published in the Federal Register on January 9, 1995.[2] One comment letter was received.[3] On October 11, 1995, DTC filed an amendment to clarify the filing.[4] Because the amendment changes the substance of the filing, the Commission is publishing this notice to solicit comments on the amended proposed rule change from interested persons.

I. Self-Regulatory Organization's Statement of the Terms of Substance of the Proposed Rule Change

DTC proposes to clarify its policy regarding depository-to-depository services and fees by filing the following statement:

With respect to any other securities depository that is registered as a clearing agency under Section 17A of the Securities Exchange Act of 1934 (a ''depository''), neither DTC nor the other depository shall be obligated to pay each other the fees charged to participants by virtue of having executed participant agreements with one another. DTC shall provide services to the other depository, charges fees for those services, and pay for the services provided to DTC, all in accordance with the terms of a separate agreement, if any, between DTC and the other depository respecting such matters.

In the absence of any such separate agreement, however:

1. DTC shall make available to any other depository any service that DTC makes available to its Participants generally, provided that such depository makes its services available to DTC on the same basis.

2. DTC (i) shall not charge for the book-entry delivery services provided to the other depository nor pay for the book-entry delivery services provided by the other depository, (ii) shall charge DTC participant fees for services relating to the physical handling of certificates rendered by DTC to such depository and pay the other depository its participant fees for services relating to the physical handling of certificates rendered to DTC and (iii) shall charge the other depository and pay the other depository for ''linked services'' provided, if any.[5] [Footnote original]

II. Self-Regulatory Organization's Statement of the Purpose of, and Statutory Basis for, the Proposed Rule Change

In its filing with the Commission, DTC included statements concerning the purpose of and basis for the proposed rule change and discussed any comments it received on the proposed rule change. The text of these statements may be examined at the places specified in Item IV below. DTC has prepared summaries, set forth in sections (A), (B), and (C) below, of the most significant aspects of such statements.[6]

(A) Self-Regulatory Organization's Statement of the Purpose of, and Statutory Basis for, the Proposed Rule Change

The purpose of the proposed rule change is to state DTC's policy with respect to depository-to-depository services and fees. DTC states that this policy statement reflects the practices that have been followed by DTC and the other depositories since the beginning of interdepository processing and is consistent with the Commission's expressed views concerning these matters.

From the very beginning of interdepository processing, in the mid-1970's and through the present, DTC and the other depositories have charged and paid each other for services rendered only such fees that have been negotiated. For example, in 1975, Pacific Securities Depository Trust Company (''PSDTC'') declared that it would not pay or levy charges on the other depositories. In September 1976, DTC was informed of the unilateral determination by the Midwest Securities Trust Company (''MSTC'') Board that as a matter of principle MSTC would discontinue paying DTC for services other than for physical withdrawals of certificates. In 1977, DTC, PSDTC, and MSTC formally agreed to provide most services to each other without charge (''no charge agreement''). At the present time, DTC has an informal agreement with the Philadelphia Depository Trust Company (''Philadep'') covering custody-related services. DTC and Philadep charge each other their published fees for these services.

DTC states that the Commission has been aware of and has commented in its

[1] 15 U.S.C. 78s(b)(1) (1988).

[2] Securities Exchange Act Release No. 35186 (December 30, 1994), 60 FR 2418.

[3] Letter from J. Craig Long, Foley and Lardner [on behalf of the Midwest Securities Trust Company], to Jonathan G. Katz, Secretary, Commission (February 3, 1995).

[4] Letter from Richard B. Nesson, Executive Vice President and General Counsel, DTC, to Jerry W. Carpenter, Esq., Assistant Director, Division of Market Regulation, Commission (October 11, 1995).

[5] The Commission has described linked services as arrangements where one depository (''servicing depository'') performs for another depository (''using depository'') the core tasks necessary to deliver the services to the using depository's participants. The Commission has cited as examples of linked services DTC's processing of ID confirmations and affirmations and DTC's fourth-party delivery service. The Commission has expressed the view that a servicing depository should be permitted to charge a using depository the same fee it charges its participants for the same or a similar service. Securities Exchange Act Release No. 23083 (March 31, 1986), 51 FR 12421.

[6] The Commission has modified the text of the summaries prepared by DTC.

releases on the practice followed by DTC and other depositories of paying each other only such fees as are negotiated rather than all fees charged to participants generally. DTC states that the Commission in its releases has never expressed the view that one depository by virtue of executing a participant agreement with another depository in order to establish the legal framework for an interface relationship thereby becomes subject to all of that other depository's published participant fees. DTC states that the Commission has expressed the belief that:

[R]egistered securities depositories are not similar to ordinary participants. Registered securities depositories are subject to special regulation that no other participants face, including a specific statutory charge to cooperate with other registered securities depositories. Thus, the Commission believes that a ''no-charge'' policy with respect to interface account activity does not result in an inequitable allocation of fees.[7]

DTC believes the proposed rule change is consistent with Section 17A(b)(3)[8] of the Act. DTC believes that implementation of the subject policy will help assure that depository interface services are available to participants of any depository thereby promoting the goal of one-account settlement. DTC also states that the policy will enable DTC to avoid paying another depository inappropriately high fees that might effect its inefficient operation and to avoid paying another depository higher per-unit fees than such depository charges its participants generally.[9] DTC believes that managing the fees paid to other depositories, which currently account for approximately 60% of DTC's total cost of providing interface services to its participants, will help reduce the fees that DTC must charge its participants to recover those costs.

(B) Self-Regulatory Organization's Statement on Burden on Competition

DTC believes that by promoting the goal of one-account settlement and by enabling DTC to control the interface costs that are paid by its participants, the proposed rule change would help promote competition among depository users.

[7] Securities Exchange Act Release No. 20461 (December 7, 1983) at footnote 34.

[8] 15 U.S.C. 78q–1(b)(3) (1988).

[9] DTC states that the Commission has indicated that where one depository is entitled to charge another (*e.g.*, for linked services), it expects that any offer of volume discounts to participants generally would also be made available to the other depository. Securities Exchange Act Release No. 23803 (March 31, 1986) at page 21.

(C) Self-Regulatory Organization's Statement on Comments on the Proposed Rule Change Received From Members, Participants, or Others

DTC has not sought or received comments on the proposed rule change.

III. Date of Effectiveness of the Proposed Rule Change and Timing for Commission Action

Within thirty-five days of the date of publication of this notice in the Federal Register, or within such longer period: (i) as the Commission may designate up to ninety days of such date if it finds such longer period to be appropriate and publishes its reasons for so finding or (ii) as to which DTC consents, the Commission will:

(a) By order approve such proposed rule change or

(b) Institute proceedings to determine whether the proposed rule change should be disapproved.

IV. Solicitation of Comments

Interested persons are invited to submit written data, views, and arguments concerning the foregoing. Persons making written submissions should file six copies thereof with the Secretary, Securities and Exchange Commission, 450 Fifth Street, N.W., Washington, D.C. 20549. Copies of the submission, all subsequent amendments, all written statements with respect to the proposed rule change that are filed with the Commission, and all written communications relating to the proposed rule change between the Commission and any person, other than those that may be withheld from the public in accordance with the provisions of 5 U.S.C. 552, will be available for inspection and copying in the Commission's Public Reference Section, 450 Fifth Street, N.W., Washington, D.C. 20549. Copies of such filing will also be available for inspection and copying at the principal office of DTC. All submissions should refer to the file number SR–DTC–94–16 and should be submitted by November 22, 1995.

For the Commission by the Division of Market Regulation, pursuant to delegated authority.[10]

Margaret H. McFarland,

Deputy Secretary.

[FR Doc. 95–27131 Filed 10–31–95; 8:45 am]

BILLING CODE 8010–01–M

[10] 17 CFR 200.30–3(a)(12) (1994).

[Release No. 34–36413; File No. SR–DTC–95–09]

Self-Regulatory Organizations; The Depository Trust Company; Order Approving Proposed Rule Change Seeking To Establish a Legal Guidance System

October 25, 1995.

On April 27, 1995, The Depository Trust Company (''DTC'') filed with the Securities and Exchange Commission (''Commission'') a proposed rule change (File No. SR–DTC–95–09) pursuant to Section 19(b)(1) of the Securities Exchange Act of 1934 (''Act'') to establish a Legal Guidance System.[1] On July 25, 1995, DTC filed an amendment to the proposed rule change.[2] On August 22, 1995, DTC filed a second amendment to the proposed rule change.[3] Notice of the proposal was published in the Federal Register on September 18, 1995.[4] No comment letters were received. For the reasons discussed below, the Commission is approving the proposed rule change.

I. Description of the Proposal

DTC will establish an inquiry-only Legal Guidance System (''LGS''), which is a menu-driven, user-friendly system designed to provide DTC participants and nonparticipants (*e.g.* transfer agents) with information regarding the documents necessary to effect a legal deposit.[5] LGS will be accessible by DTC participants and nonparticipants through DTC's Participant Terminal System (''PTS''). LGS contains industry requirements, individual state and province requirements, and transfer agent requirements for processing legal deposits. DTC will post a disclaimer in the LGS user guide notifying users that DTC shall not be liable to the user for

[1] 15 U.S.C. 78s(b)(1) (1988).

[2] DTC amended its proposal to permit organizations that are not DTC participants, such as transfer agents, to subscribe to the Legal Guidance System. Letter from Piku K. Thakkar, Assistant Counsel, DTC, to Mark Steffensen, Esq., Division of Market Regulation (''Division''), Commission (July 21, 1995).

[3] As proposed in the original filing, once a user logged onto the Legal Guidance System a disclaimer of liability message was to appear on the terminal screen. DTC amended its proposal to eliminate this message, and instead the disclaimer will appear in a user guide for the Legal Guidance System to be provided to all users. Letter from Piku K. Thakkar, Assistant Counsel, DTC, to Peter Geraghty, Division, Commission (August 17, 1995).

[4] Securities Exchange Act Release No. 36219 (September 12, 1995), 60 FR 48181.

[5] A ''legal deposit'' consists of a registered security and any legal documentation required to effect the legal transfer and registration of the security from the registered holder's name into DTC's nominee name.

any damages resulting from mistakes or omission in LGS.[6]

The LGS menu approach will guide users through a step-by-step process to ascertain the relevant requirements for transferring legal deposits. LGS also will have a ''fast forward'' navigation option that will allow an experienced user to quickly access the requisite information. Users also will be able to request through LGS that certain transfer documents be sent to their offices by facsimile transmission. In the near future, DTC plans to interface LGS with its Pending Legal Deposit System to track and monitor document expiration. The fee charged to DTC participants and nonparticipants for LGS service will be DTC's standard fee for PTS inquiries.

II. Discussion

Section 17A(b)(3)(F)[7] of the Act requires that the rules of a clearing agency be designed to foster cooperation and coordination with persons engaged in the clearance and settlement of securities transactions and to remove impediments to and perfect the mechanism of a national system for the prompt and accurate clearance and settlement of transactions. Furthermore, Section 17(a)(1)(C) of the Act[8] sets forth a Congressional finding that new data processing and communications techniques create the opportunity for more efficient, effective, and safe procedures for clearance and settlement. As discussed below, the Commission believes that DTC's proposed rule change is consistent with DTC's obligations under the Act.

Implementation of LGS will assist DTC participants and nonparticipants in the preparation of the documentation necessary to effect a legal deposit of securities at DTC by providing guidance as to state, province, and transfer agent requirements as well as forms of the documents required to effect such transfer. This could help to reduce the number of deposits that cannot be immediately processed through DTC due to improper documentation. Because use of LGS could make the legal deposit eligible for DTC processing in a more timely manner, it in turn could serve to improve the efficiency and effectiveness of clearance and settlement of securities transactions.

[6] Specifically, the disclaimer will state that ''DTC does not represent the accuracy, adequacy, or fitness for a particular purpose of the following information, which is provided as is. DTC shall not be liable for: (1) Any loss resulting directly or indirectly from mistakes, omissions, interruptions, delays, errors, or defects arising from or related to this service; and (2) any special, consequential, exemplary, incidental, or punitive damages.''

[7] 15 U.S.C. 78q–1(b)(3)(F) (1988).

[8] 15 U.S.C. 78q–1(a)(1)(C) (1988).

III. Conclusion

On the basis of the foregoing, the Commission finds that the proposal is consistent with the requirements of the Act and in particular with the requirements of Section 17A of the Act and the rules and regulations thereunder.

It is therefore ordered, pursuant to Section 19(b)(2) of the Act, that the proposed rule change (File No. SR–DTC–95–09) be, and hereby is, approved.

For the Commission by the Division of Market Regulation, pursuant to delegated authority.[9]

Margaret H. McFarland,

Deputy Secretary.

[FR Doc. 95–27001 Filed 10–31–95; 8:45 am]

BILLING CODE 8010–01–M

[Release No. 34–36421; File No. SR–NYSE–95–35]

Self-Regulatory Organizations; Notice of Filing and Immediate Effectiveness of Proposed Rule Change by the New York Stock Exchange, Inc. Relating to a Pilot Program to Display Price Improvement on the Execution Report Sent to the Entering Firm

October 26, 1995.

Pursuant to Section 19(b)(1) of the Securities Exchange Act of 1934 (''Act''), 15 U.S.C. 78s(b)(1), notice is hereby given that on October 20, 1995, the New York Stock Exchange, Inc. (''NYSE'' or ''Exchange'') filed with the Securities and Exchange Commission (''Commission'') the proposed rule change as described in Items I, II and III below, which Items have been prepared by the self-regulatory organization. The Commission is publishing this notice to solicit comments on the proposed rule change from interested persons.

I. Self-Regulatory Organization's Statement of the Terms of Substance of the Proposed Rule Change

The proposed rule change consists of a pilot program, to be implemented for six months, whereby the Exchange will test and evaluate a means of calculating and displaying, on the execution reports sent to member firms, the dollar amounts realized as savings to their customers as a result of price improvement in the execution of their orders on the Exchange. During the pilot program, the Exchange expects to work with Merrill Lynch, Pierce, Fenner & Smith, Incorporated (''Merrill Lynch'') in testing and evaluating the proposed methodology. Assuming the results of the pilot program are successful, the Exchange will make this program available to all its member organizations.

[9] 17 CFR 200.30–3(a)(12) (1994).

II. Self-Regulatory Organization's Statement of the Purpose of, and Statutory Basis for, the Proposed Rule Change

In its filing with the Commission, the self-regulatory organization included statements concerning the purpose of and basis for the proposed rule change and discussed any comments it received on the proposed rule change. The text of these statements may be examined at the places specified in Item IV below. The self-regulatory organization has prepared summaries, set forth in Sections A, B, and C below, of the most significant aspects of such statements.

A. Self-Regulatory Organization's Statement of the Purpose of, and Statutory Basis for, the Proposed Rule Change

1. Purpose

The purpose of the proposed six month pilot program is to develop, test, and evaluate a methodology and program for calculating and displaying, on an execution report sent to member firms entering orders, the dollar value saved by their customers as a result of price improvement of orders executed on the Exchange. This program does not in any way affect the actual execution of orders. The Exchange is proposing to refer to this calculated dollar savings as the ''NYSE PRIME℠.'' For the six months of the pilot, while the program is being tested and evaluated, this feature will be available only for certain orders entered by Merrill Lynch, which is the pilot firm with which the Exchange is working. Should the pilot prove successful, this program will be made available to all other member organizations.

The NYSE PRIME is proposed to be made available for intra-day market orders entered via the Exchange's SuperDOT system that are not tick sensitive and are entered from off the Floor.[1] The NYSE PRIME (amount of price improvement) is calculated in one of two ways: (1) In comparison to the guaranteed (stopped) price for market orders that are stopped; and (2) in comparison to the best bid and offer

℠ NYSE PRIME is a service mark of the New York Stock Exchange, Inc.

[1] Also excluded from the NYSE PRIME feature are booth entered or booth routed orders, booked orders, combination orders (*e.g.,* switch orders) and orders diverted to sidecar.

displayed on the national market system at the time the order is received.[2]

The following examples illustrate how NYSE PRIME is proposed to work.

Assume the NYSE market quote is 50–50¼.

Example 1 A market order to sell 1000 shares, entered on the NYSE, is stopped at 50, meaning it is guaranteed to sell at 50 or a better price. The quote is narrowed to 50–50⅛ and the order is subsequently executed at 50⅛. This is an ⅛ point savings over the guaranteed (stopped) price of 50, which translates into $125 savings over the guaranteed price. Thus, the execution report would display NYSE PRIME $125.[3]

Assume the national market quote is 50–50¼.

Example 2 A market order to buy 800 shares, entered on the NYSE, is executed at 50⅛. This is an ⅛ point savings over taking the prevailing offer of 50¼. The execution report would display NYSE PRIME $100.

Assume the NYSE market quote is 50–50⅛–20,000 by 1,000.

Example 3 A market order to sell 1,000 shares is entered on the NYSE. Because the large imbalance on the bid side suggests a likelihood that the subsequent transaction will be on the offer side, the sell order is stopped at 50, meaning it is guaranteed to sell at 50 or a better price. The offer is increased to 2,000 shares at 50⅛. Subsequently, another order comes in to buy 2,000 shares at 50⅛ and the stopped order to sell is executed at 50⅛. This is an ⅛ point savings over the guaranteed (stopped) price of 50, which translates into $125 savings over the guaranteed price. Thus, the execution report would display NYSE PRIME $125.

Assume the national market quote is 50–50⅛–1,000 by 1,000.

Example 4 A market order to sell 1,000 shares, entered on the NYSE, comes in at the same time as a market order to buy 2,000 shares. Both orders are executed at 50⅛. This is an ⅛ point price improvement for the 1,000 share sell order, which otherwise would have been executed at the bid price of 50. Thus, its execution report would display NYSE PRIME $125.

If there is no price improvement because either there was no savings over the prevailing quote/guaranteed price or the order was not eligible for the pilot, then no price improvement information would be displayed on the execution report to the entering firm.

The Exchange believes that the NYSE PRIME can be expected to enhance the information made available to investors and improve their understanding of the auction market. The Exchange is proposing to test and evaluate this service by conducting a six-month pilot to ensure that the program is viable and that the data are accurate before making the program available to all member organizations. During this period, the Exchange will make whatever refinements are necessary to the service before making it generally available to member firms.

2. Statutory Basis

The basis under the Act for this rule change is the requirement under Section 6(b)(5) that an exchange have rules that are designed to promote just and equitable principles of trade, to remove impediments to and perfect the mechanism of a free and open market and a national market system and, in general, to protect investors and the public interest. This rule change is designed to perfect the mechanism of a free and open market in that it enhances the information provided to investors by displaying to them the dollar value of the price improvement their orders may have received when executed on the NYSE.

B. Self-Regulatory Organization's Statement on Burden on Competition

The Exchange does not believe that the rule change will impose any burden on competition that is not necessary or appropriate in furtherance of the purposes of the Act. In fact, the Exchange believes that the NYSE PRIME program can reasonably be expected to enhance competition by disclosing to investors the amount of savings they may realize as a result of the price improvement their orders may receive with executed on the NYSE.

C. Self-Regulatory Organization's Statement on Comments on the Proposed Rule Change Received From Members, Participants or Others

The Exchange has neither solicited nor received written comments on the rule change.

III. Date of Effectiveness of the Proposed Rule Change and Timing for Commission Action

This rule change is filed pursuant to paragraph (A) of Section 19(b)(3) of the Act, and paragraphs (e)(5) (i), (ii), and (iii) of Rule 19b–4 thereunder. The NYSE PRIME program will entail enhancements to the Exchange's CMS (common message switch), SuperDOT and Post Trade systems. This program does not significantly affect the protection of investors or the public interest, does not impose any significant burden on competition, and does not have the effect of limiting access to or availability of any Exchange order enter or trading system. As such, this rule change may take effect immediately upon filing with the Commission. At any time within 60 days of the filing of such rule change, the Commission may summarily abrogate such rule change if it appears to the Commission that such action is necessary or appropriate in the public interest, for the protection of investors or otherwise in furtherance of the purposes of the Act.

IV. Solicitation of Comments

Interested persons are invited to submit written data, views and arguments concerning the foregoing. Persons making written submissions should file six copies thereof with the Secretary, Securities and Exchange Commission, 450 Fifth Street, N.W., Washington, D.C. 20549. Copies of the submission , all subsequent amendments, all written statements with respect to the proposed rule change that are filed with the Commission, and all written communications relating to the proposed rule change between the Commission and any person, other than those that may be withheld from the public in accordance with the provisions of 5 U.S.C. § 552, will be available for inspection and copying at the Commission's Public Reference Section, 450 Fifth Street, N.W., Washington, D.C. 20549. Copies of such filing will also be available for inspection and copying at the principal office of the NYSE. All submissions should refer to File No. SR–NYSE–95–35 and should be submitted by November 22, 1995.

For the Commission, by the Division of Market Regulation, pursuant to delegated authority.

Margaret H. McFarland,

Deputy Secretary.

[FR Doc. 95–27134 Filed 10–31–95; 8:45 am]

BILLING CODE 8010–01–M

[Release No. 34–36416; File No. SR–NYSE–95–33]

Self-Regulatory Organizations; Notice of Filing and Immediate Effectiveness of Proposed Rule Change by the New York Stock Exchange, Inc. (''NYSE'' or ''Exchange'') filed with the Securities and Exchange, Inc., Relating to Additions to List of Rule Violations and Fines Administered Pursuant to NYSE Rule 476A

October 25, 1995.

Pursuant to Section 19(b)(1) of the Securities Exchange Act of 1934 (''Act''), 15 U.S.C. 78s(b)(1), notice is hereby given that on October 2, 1995,

[2] For stocks that are not ITS-eligible, the NYSE quote is used.

[3] The algorithm that calculates the savings per share can calculate price improvement for a minimum of 1/32 or $0.03125 per share to a maximum of 96/32 or $3.00 per share. If price improvement exceeds $3.00 per share, the NYSE PRIME will be preceded by a ''>'' sign and will equal $3.00 × the number of shares traded.

the New York Stock Exchange, Inc. (''NYSE'' or ''Exchange'' filed with the Securities and Exchange Commission (''SEC'' or ''Commission'') the proposed rule change as described in Items I, II and III below, which Items have been prepared by the self-regulatory organization. The Commission is publishing this notice to solicit comments on the proposed rule change from interested persons.

I. Self-Regulatory Organization's Statement of the Terms of Substance of the Proposed Rule Change

The NYSE proposes to add the following options rules to the ''List of Exchange Rule Violations and Fines Applicable Thereto Pursuant to Rule 476A'' (''Rule 476 List''): (1) the requirement under NYSE Rule 750(e)(i) that options specialists establish bid/ask spreads no greater than the maximum permitted Competitive Options Traders (''COTs''), based on the price of the option or the bid/ask differential of the underlying security; (2) the requirement under NYSE Rule 758(b)(i)(C)(1) that COTs establish bid/ask spreads within specified parameters, based on the price of the option or the bid/ask differential of the underlying security; (3) the requirement under NYSE Rule 780(b)(i) that members and member organizations indicate to the Exchange the final decisions of equity option holders to exercise or not to exercise expiring equity options by a specified time; and (4) the requirement under NYSE Rule 780(f) that members and member organizations make, keep, and file with the Exchange records concerning every final exercise decision for which a contrary exercise advice is required.[1] The NYSE also plans to amend its 19d–1 reporting plan [2] for NYSE Rule 476A violations to include the rules added to the Rule 476A List.[3]

The text of the proposed rule change is available at the Office of the Secretary, NYSE, and at the Commission.

II. Self-Regulatory Organization's Statement of the Purpose of, and Statutory Basis for, the Proposed Rule Change

In its filing with the Commission, the self-regulatory organization included statements concerning the purpose of and basis for the proposed rule change and discussed any comments it received on the proposed rule change. The text of these statements may be examined at the places specified in Item IV below. The self-regulatory organization has prepared summaries, set forth in sections (A), (B), and (C) below, of the most significant aspects of such statements.

(A) Self-Regulatory Organization's Statement of the Purpose of, and Statutory Basis for, the Proposed Rule Change

(a) Purpose

NYSE Rule 476A [4] provides that the Exchange may impose a fine, not to exceed $5,000, on any member, member organization, allied member, approved person, or registered or non-registered employee of a member or member organization for a minor violation of certain specified NYSE rules.

The purpose of the NYSE Rule 476A procedure is to provide for a response to a rule violation when a meaningful sanction is appropriate but when the initiation of a disciplinary proceeding under NYSE Rule 476, ''Disciplinary Proceedings Involving Charges Against Members, Member Organizations Allied Members, Approved Persons, Employees, or Others,'' is not suitable because such a proceeding would be more costly and time-consuming than would be warranted given the minor nature of the violation. NYSE Rule 476A provides for an appropriate response to minor violations of certain Exchange rules while preserving the due process rights of the party accused through specified, required procedures. The Rule 476A List specifies those rule violations which may be the subject of fines under the rule and also includes a fine schedule.

In the Minor Rule Plan Approval Order,[5] which initially set forth the provisions and procedures of NYSE Rule 476A, the Exchange indicated it would amend the list of rules from time to time, as it considered appropriate, in order to phase-in the implementation of NYSE Rule 476A as experience with it was gained.

The Exchange presently seeks approval to add to the list of rules subject to possible imposition of fine under NYSE Rule 476A procedures the failure by members or member organizations to comply with various options rules. Specifically, these include NYSE Rule 750(e)(i) and 758(b)(i)(C) (1), which establish maximum bid/ask spreads which options specialists and COTs may make based on the price of the option or the bid/ask differential of the underlying security; NYSE Rule 780(b)(i), which requires members and member organizations to indicate final decisions of equity options holders either to exercise or not to exercise expiring equity options by a specified time; and NYSE Rule 780(f), which requires members and member organizations to make, keep, and file with the Exchange records with respect to final exercise decisions made with respect to options in certain circumstances.

The NYSE notes that while the Exchange, upon investigation, may determine that a violation of these procedures is a minor violation of the

[1] A contrary exercise advice is a form that the Exchange prescribes for use by a member or member organization to convey a final exercise decision of an equity option holder either (1) not to exercise an equity option that would otherwise by exercised automatically pursuant to the exercise-by exception procedure of Options Clearing Corporation Rule 805; or (2) to exercise an equity option that would otherwise not be so exercised.

[2] Pursuant to Rule 19d–1(c)(1) under the act, a self-regulatory organization (''SRO'') is required to file promptly with the Commission notice of any ''final'' disciplinary action taken by that SRO. Pursuant to Rule 19d–1(c)(2), however, any disciplinary action taken by an SRO for a violation of an SRO rule, which has been designated as a minor rule violation pursuant to a Commission approved plan, shall not be considered ''final'' if the sanction imposed consists of a fine not exceeding $2,500 and the sanctioned person does not seek an adjudication, including a hearing, or otherwise exhaust his or her administrative remedies. By deeming that unadjudicated minor rule violations are not final, the Commission permits the SRO to report such violations on a periodic basis. The Commission approved the NYSE's minor rule plan, contained in NYSE Rule 476A, in 1985. *See* Securities Exchange Act Release No. 21688 (January 25, 1985), 50 FR 5025 (February 5, 1985) (ordered approving File No. SR–HYSE–84–27) (''Minor Rule Plan Approval Order''). Accordingly, the Exchange is relieved of current reporting requirements under Section 19(d)(1) with respect to those disciplinary actions taken pursuant to NYSE Rule 476A.

[3] *See* Letter from Daniel Parker Odell, Assistant Secretary, NYSE, to Glen Barrentine, Senior Counsel, Division of Market Regulation, Commission, dated September 29, 1995.

[4] NYSE Rule 476A was approved by the Commission on January 25, 1985. *See* Minor Rule Plan Approval Order, *supra* note 2. Subsequent additions of rules to the Rule 476A List were approved in Securities Exchange Act Release Nos. 22307 (May 14, 1985), 50 FR 21008 (May 21, 1985) (order approving File No. SR–NYSE–85–15); 23104 (April 11, 1986), 51 FR 13307 (April 18, 1986) (order approving File No. SR–NYSE–86–12); 24895 (October 5, 1987), 52 FR 41643 (October 29, 1987) (order approving File No. SR–NYSE–86–21); 25763 (May 27, 1988), 53 FR 20925 (June 7, 1988) (order approving File No. SR–NYSE–87–10); 27878 (April 4, 1990), 55 FR 13345 (April 10, 1990) (order approving File No. SR–NYSE–89–44); 28003 (May 8, 1990), 55 FR 20004 (May 14, 1990) (order approving File No. SR–NYSE–91–09); 28505 (October 2, 1990), 55 FR 41288 (October 10, 1990) (order approving File No. SR–NYSE–90–04); 28995 (March 21, 1991), 56 FR 12967) (March 28, 1991) (order approving File No. SR–NYSE–91–04); 30280 (January 22, 1992), 57 FR 3452 (January 29, 1992) (order approving File No. SR–NYSE–91–38); 30536 (March 31, 1992), 57 FR 12357 (April 9, 1992) (order approving File No. SR–NYSE–91–42); 32421 (June 7, 1993), 58 FR 32978 (June 14, 1993) (order approving File No. SR–NYSE–93–24); 33403 (December 28, 1993), 59 FR 641 (January 5, 1994) (order approving File No. SR–NYSE–95–35); 33816 (March 25, 1994), 59 FR 15471 (April 1, 1994) (order approving File No. SR–NYSE–93–27); and 34230 (June 17, 1994), 59 FR 32727 (June 24, 1994) (order approving File No. SR–NYSE–94–05).

[5] *See* note 2, *supra*.

type which is properly addressed by the procedures adopted under NYSE Rule 476A, in those instances where investigation reveals a more serious violation of the above-described rules, the Exchange will provide an appropriate regulatory response.

(b) Statutory Basis

The NYSE believes that the proposed rule change is consistent with Section 6(b) of the Act, in general, and, in particular, with Section 6(b)(6), in that it will provide a procedure whereby member organizations can be ''appropriately disciplined'' in those instances when a rule violation is minor in nature, but a sanction more serious than a warning or cautionary letter is appropriate. The NYSE believes that the proposal provides a fair procedure for imposing such sanctions, in accordance with the requirements of Sections 6(b)(7) and 6(d)(1) of the Act.

(B) Self-Regulatory Organization's Statement on Burden on Competition

The NYSE does not believe that the proposed rule change will impose any burden on competition that is not necessary or appropriate in furtherance of the purposes of the Act.

(C) Self-Regulatory Organization's Statement on Comments on the Proposed Rule Change Received From Members, Participants or Others

The Exchange has neither solicited nor received written comments on the proposed rule change.

III. Date of Effectiveness of the Proposed Rule Change and Timing for Commission Action

Because the foregoing rule change: (1) Does not significantly affect the protection of investors or the public interest; (2) does not impose any significant burden on competition; (3) was provided to the Commission for its review at least five business days prior to the filing date; and (4) does not become operative for 30 days after October 2, 1995, it has become effective pursuant to Section 19(b)(3)(A) of the Act and Rule 19b–4(e)(6) thereunder. In particular, the Commission believes that the proposal does not significantly affect the protection of investors or the public interest and does not impose any significant burden on competition. At any time within 60 days of the filing of such proposed rule change, the Commission may summarily abrogate such rule change if it appears to the Commission that such action is necessary or appropriate in the public interest, for the protection of investors, or otherwise in furtherance of the purposes of the Act.

IV. Solicitation of Comments

Interested persons are invited to submit written data, views and arguments concerning the foregoing. Persons making written submissions should file six copies thereof with the Secretary, Securities and Exchange Commission, 450 Fifth Street, NW., Washington, DC 20549. Copies of the submission, all subsequent amendments, all written statements with respect to the proposed rule change that are filed with the Commission, and written communications relating to the proposed rule change between the Commission and any person, other than those that may be withheld from the public in accordance with the provisions of 5 U.S.C. 552, will be available for inspection and copying at the Commission's Public Reference Section, 450 Fifth Street, NW., Washington, DC. Copies of such filing will also be available for inspection and copying at the principal office of the above-mentioned self-regulatory organization. All submissions should refer to the file number in the caption above and should be submitted by November 22, 1995.

For the Commission, by the Division of Market Regulation, pursuant to delegated authority.[6]

Margaret H. McFarland,

Deputy Secretary.

[FR Doc. 95–27005 Filed 10–31–95; 8:45 am]

BILLING CODE 8010–01–M

[Release No. 34–36424; File No. SR–PSE–95–26]

Self-Regulatory Organizations; Notice of Filing and Immediate Effectiveness of Proposed Rule Change by the Pacific Stock Exchange, Inc., Relating to the Amendment of the Schedule of Rates for Exchange Services

October 26, 1995.

Pursuant to Section 19(b)(1) of the Securities Exchange Act of 1934 (''Act''),[1] and Rule 19b–4 thereunder,[2] notice is hereby given that on October 17, 1995, the Pacific Stock Exchange, Inc. (''PSE'' or ''Exchange'') filed with the Securities and Exchange Commission (''Commission'') the proposed rule change as described in Items I, II, and III below, which Items have been prepared by the self-regulatory organization. The Commission is publishing this notice to solicit comments on the proposed rule change from interested persons.

I. Self-Regulatory Organization's Statement of the Terms of Substance of the Proposed Rule Change

The Exchange is proposing to amend its Schedule of Rates to reduce option transaction charges for certain customer block trades. The text of the proposed rule change is available at the Office of the Secretary, the Exchange, and the Commission.

II. Self-Regulatory Organization's Statement of the Purpose of, and Statutory Basis for, the Proposed Rule Change

In its filing with the Commission, the PSE included statements concerning the purpose of and basis for the proposed rule change and discussed any comments it received on the proposed rule change. The text of these statements may be examined at the places specified in Item IV below. The PSE has prepared summaries, set forth in Sections A, B, and C below, of the most significant aspects of such statements.

A. Self-Regulatory Organization's Statement of the Purpose of, and Statutory Basis for, the Proposed Rule Change

1. Purpose

Under the Exchange's current Schedule of Rates, for manually executed options transactions, customers are charged $0.35 per contract side where the premium is $1 or more per contract. The Exchange is proposing to establish a rate of $0.25 per contract side where the premium is $1 or more per contract for the first 400 such contracts in a block trade. The Exchange is also proposing that the new rate take effect for the November 1995 trade month, and that it continue thereafter for an indefinite duration.

According to the PSE, the purpose of the proposed rule change is to assure that the Exchange's customer transaction charges are fair and competitive.

2. Statutory Basis

The Exchange believes the proposed rule change is consistent with Section 6(b) of the Act in general,[3] and furthers the objectives of Section 6(b)(4) in particular,[4] in that it provides for the equitable allocation of reasonable dues, fees, and other charges among the

---

[6] 17 CFR 200.30–3(a)(12) (1994).

[1] 15 U.S.C. 78s(b)(1) (1988).

[2] 17 CFR 240.19b–4 (1994).

[3] 15 U.S.C. 78f(b) (1988).

[4] 15 U.S.C. 78f(b)(4) (1988).

Exchange's members and other persons using its facilities.

B. Self-Regulatory Organization's Statement on Burden on Competition

The PSE does not believe that the proposed rule change will impose any inappropriate burden on competition.

C. Self-Regulatory Organization's Statement on Comments on the Proposed Rule Change Received From Members, Participants, or Others

No written comments were solicited or received with respect to the proposed rule change.

III. Date of Effectiveness of the Proposed Rule Change and Timing for Commission Action

The foregoing rule change constitutes or changes a due, fee, or other charge imposed by the Exchange and, therefore, has become effective pursuant to Section 19(b)(3)(A) of the Act[5] and subparagraph (e) of Rule 19b–4 thereunder.[6] At any time within sixty days of the filing of such proposed rule change, the Commission may summarily abrogate such rule change if it appears to the Commission that such action is necessary or appropriate in the public interest, for the protection of investors, or otherwise in furtherance of the purposes of the Act.

IV. Solicitation of Comments

Interested persons are invited to submit written data, views, and arguments concerning the foregoing. Persons making written submissions should file six copies thereof with the Secretary, Securities and Exchange Commission, 450 Fifth Street, N.W., Washington, D.C. 20549. Copies of the submission, all subsequent amendments, all written statements with respect to the proposed rule change that are filed with the Commission, and all written communications relating to the proposed rule change between the Commission and any person, other than those that may be withheld from the public in accordance with the provisions of 5 U.S.C. 552, will be available for inspection and copying at the Commission's Public Reference Section, 450 Fifth Street, N.W., Washington, D.C. 20549. Copies of such filing also will be available for inspection and copying at the principal office of the PSE. All submissions should refer to File No. SR–PSE–95–26 and should be submitted by November 22, 1995.

[5] 15 U.S.C. 78s(b)(3)(A) (1988).

[6] 17 CFR 240.19b–4 (1994).

For the Commission, by the Division of Market Regulation, pursuant to delegated authority.[7]

Margaret H. McFarland,

Deputy Secretary.

[FR Doc. 95–27129 Filed 10–31–95; 8:45 am]

BILLING CODE 8010–01–M

[7] 17 CFR 200.30–3 (a)(12) (1994).

[Release No. 34–36405; File No. SR–PTC–95–07]

Self-Regulatory Organizations; Participants Trust Company; Notice of Filing and Order Granting Accelerated Approval of a Proposed Rule Change Establishing a Ninety Day Pilot Program for the Change of the Opening of Processing Activity for Security Transactions

October 20, 1995.

Pursuant to Section 19(b)(1) of the Securities Exchange Act of 1934 (''Act''),[1] notice is hereby given that on October 11, 1995, the Participants Trust Company (''PTC'') filed with the Securities and Exchange Commission (''Commission'') the proposed rule change (File No. SR–PTC–95–07) as described in Items I and II below, which Items have been prepared primarily by PTC. The Commission is publishing this notice and order to solicit comments from interested persons and to grant accelerated approval of the proposed rule change for a ninety day period.

I. Self-Regulatory Organization's Statement of the Terms of Substance of the Proposed Rule Change

The proposed rule change establishes a ninety day pilot program for the opening of security processing activity at 8:30 a.m. instead of at the present time of 7:00 a.m. The pilot program is scheduled to begin on October 23, 1995, and will continue through January 21, 1996.

II. Self-Regulatory Organization's Statement of the Purpose of, and Statutory Basis for, the Proposed Rule Change

In its filing with the Commission, PTC included statements concerning the purpose of and basis for the proposed rule change and discussed any comments it received on the proposed rule change. The text of these statements may be examined at the places specified in Item IV below. Summaries of the most significant aspects of such statements are set forth in sections A, B, and C below.[2]

[1] 15 U.S.C. 78s(b)(1) (1988).

[2] The Commission has modified the text of the summaries prepared by PTC.

A. Self-Regulatory Organization's Statement of the Purpose of, and the Statutory Basis for, the Proposed Rule Change

The purpose of the proposed rule change is to establish a ninety day pilot program for the opening of security processing activity at 8:30 a.m. instead of at the present time of 7:00 a.m. The pilot program is scheduled to begin on October 23, 1995. The current end-of-day cut-off times will remain unchanged. PTC's processing system will retain the 7:00 a.m. opening time for purposes of participant log-ons and intraparticipant movements of securities into or out of segregated accounts.

The proposed rule change will conform the opening of processing activity at PTC to the opening time of the Federal Reserve System's fedwire. This will eliminate the hour and a half window during which time transactions failing PTC's credit checks cannot be processed because participants are unable to move funds to PTC (''prefunding'') until the 8:30 fedwire opening. The incidence of transactions that may require prefunding in order to pass credit checks during this period is expected to increase after the implementation of PTC/SPEED processing Release 5.6, which will eliminate the posting of securities to a participant's abeyance account while awaiting match by the receiving participant. Under SPEED Release 5.6, the abeyance account is being eliminated, and transactions will be immediately posted to the deliverer's and receiver's account.[3]

The pilot program is scheduled to begin on October 23, 1995, in order to permit its implementation sufficiently prior to November 6, 1995, the earliest date on which SPEED Release 5.6 may be implemented. PTC anticipates that the later opening of processing activity will have no impact on the settlement process. PTC will monitor any effects of the change during the ninety day period and will file a proposed rule change with the Commission prior to implementing the later opening of processing activity beyond the ninety day period. Should PTC decide not to implement 8:30 a.m. as the opening of its security processing activity permanently at the end of the ninety day period, the opening of PTC's security processing activity will revert to 7:00 a.m. without further rule filings with the Commission. In such a

[3] For further information on SPEED Release 5.6 and changes to PTC's processing system, refer to Securities Exchange Act Release No. 36377 (October 16, 1995) [File No. SR–PTC–95–06] (notice of filing of proposed rule change).

situation, even though PTC will not be required to make a rule filing, PTC will notify the Commission of its intention to reinstitute the 7:00 a.m. opening. Furthermore, PTC will notify its participants sufficiently in advance of a return to the 7:00 a.m. opening.

PTC believes that the proposed rule change is consistent with Section 17A(b)(3)(F) of the Act[4] and the rules and regulations thereunder because it facilitates the prompt and accurate clearance and settlement of securities transactions and provides for the safeguarding of securities and funds in PTC's custody or control or for which PTC is responsible.

B. Self-Regulatory Organization's Statement on Burden on Competition

PTC does not believe that the proposed rule change imposes any burden on competition.

C. Self-Regulatory Organization's Statement on Comments on the Proposed Rule Change Received from Members, Participants, or Others

PTC has not received written comments on the proposed rule change. PTC is formally soliciting participant response contemporaneous with this filing.

III. Date of Effectiveness of the Proposed Rule Change and Timing for Commission Action

Section 17A(b)(3)(F) of the Act[5] requires that the rules of a clearing agency be designed to promote the prompt and accurate clearance and settlement of securities transactions and to assure the safeguarding of securities and funds in the custody or control of the clearing agency or for which it is responsible. The Commission believes that conforming the opening of processing activity at PTC to the opening time of the Federal Reserve's funds wire is consistent with these objections.

The implementation of SPEED Release 5.6 into PTC's processing system will cause simultaneous debiting and crediting of participants' cash and securities accounts. This will require that the cash balance of a receiving participant's account in an account transfer versus payment be debited even though the delivery may not have been approved by the receiving participant. Match functionality no longer will operate to defer the debit to the cash balance of the receiving participant until the delivery is approved. Because unmatched deliveries of account transfers versus payment no longer will generate a credit to the cash balance of the delivering participant without the corresponding debit to the receiving participant, it is anticipated that the implementation of SPEED Release 5.6 may result in increased incidences of transactions that may require prefunding to pass credit checks. The change in the opening time of processing activity at PTC should reduce the number of transactions failing credit because participants will be able to move funds through the fedwire to PTC at the opening of PTC's processing.

PTC has requested that the Commission find good cause for approving the proposed rule change prior to the thirtieth day after the date of publication of notice of the filing. By granting accelerated approval, PTC will be able to allow its participants sufficient time to become accustomed to the new opening time of processing activity before the implementation of SPEED Release 5.6. Therefore, the Commission finds sufficient cause to grant accelerated approval of the proposal. The staff of the Board of Governors of the Federal Reserve System has concurred with the Commission's decision to grant accelerated approve.[6]

IV. Solicitation of Comments

Interested persons are invited to submit written data, views, and arguments concerning the foregoing. Persons making written submissions should file six copies thereof with the Secretary, Securities and Exchange Commission, 450 Fifth Street, N.W., Washington, D.C. 20549. Copies of the submission, all subsequent amendments, all written statements with respect to the proposed rule change that are filed with the Commission, and all written communications relating to the proposed rule change between the Commission and any person, other than those that may be withheld from the public in accordance with the provisions of 5 U.S.C. 552, will be available for inspection and copying at the Commission's Public Reference Section, 450 Fifth Street, N.W., Washington, D.C. 20549. Copies of such filing will also be available for inspection and copying in the principal office of PTC. All submissions should refer to file number SR–PTC–95–07 and should be submitted by November 22, 1995.

It is therefore ordered, pursuant to Section 19(b)(2) of the Act, that the proposed rule change (File No. SR–PTC–95–07) be and hereby is approved on an accelerated basis through January 21, 1996.

For the Commission by the Division of Market Regulation, pursuant to delegated authority.[7]

Margaret H. McFarland,

Deputy Secretary.

[FR Doc. 95–27002 Filed 10–31–95; 8:45 am]

BILLING CODE 8010–01–M

[4] 15 U.S.C. 78q–1(b)(3)(F) (1988).

[5] 15 U.S.C. 78q–1(b)(3)(F) (1988).

[6] Telephone conversation between William R. Stanley, Board of Governors of the Federal Reserve System, and Ari Burstein, Division of Market Regulation, Commission (October 18, 1995).

[7] 17 CFR 200.30–3(a)(12) (1994).

[Release No. 34–36414; File Nos. SR–Amex–95–40, SR–BSE–95–15, SR–CHX–95–23, SR–NYSE–95–34, and SR–Phlx–95–72]

Self-Regulatory Organizations; Order Granting Accelerated Approval of Proposed Rule Change and Notice of Filing and Order Granting Accelerated Approval of Amendment No. 1 Thereto by the Philadelphia Stock Exchange, Inc., and Notice of Filing and Order Granting Accelerated Approval of Proposed Rule Changes by the American Stock Exchange, Inc., Boston Stock Exchange, Inc., Chicago Stock Exchange, Incorporated, and New York Stock Exchange, Inc. Relating to an Extension of Certain Market-Wide Circuit Breaker Provisions

October 25, 1995.

I. Introduction

Pursuant to Section 19(b)(1) of the Securities Exchange Act of 1934 (''Act''),[1] and Rule 19b–4 thereunder,[2] on September 18, 1995, the Philadelphia Stock Exchange, Inc. (''Phlx''), on October 5, 1995, the American Stock Exchange, Inc. (''Amex''), on October 6, 1995, the Chicago Stock exchange, Incorporated (''CHX''), on October 11, 1995, the New York Stock Exchange, Inc. (''NYSE''), and on October 16, 1995, the Boston Stock Exchange, Inc. (''BSE''), respectively (each individually referred to herein as an ''Exchange'' and two or more collectively referred to as ''Exchanges''), submitted to the Securities and Exchange Commission (''Commission'') proposed rule changes relating to the extension of certain market-wide circuit breaker provisions. The Phlx proposal was published for comment in the Federal Register on October 6, 1995.[3] No comments were

[1] 15 U.S.C. 78s(b)(1) (1988).

[2] 17 CFR 240.19b–4 (1994).

[3] *See* Securities Exchange Act Release No. 36319 (September 29, 1995), 60 FR 52444.

received regarding the Phlx's proposed rule change. On October 20, 1995, the Phlx filed Amendment No. 1 to its proposal.[4] This order approves the Exchanges' proposals.

II. Description, of Proposals

In 1988, the Commission approved circuit breaker proposals by the Exchanges.[5] In general, the Exchanges' circuit breaker rules provide that trading would halt for one hour if the Dow Jones Industrial Average (''DJIA'') were to decline 250 points from its previous day's closing level and, thereafter, trading would halt for an additional two hours if the DJIA were to decline 400 points from its previous day's close.[6] These circuit breaker mechanisms are an important part of the measures adopted by the Exchanges to address market volatility concerns in the wake of the October 1987 Market Break.

The Commission approved the Amex, BSE, MSE, NYSE, Phlx and National Association of Securities Dealers' (''NASD'') circuit breaker proposals on a pilot program basis.[7] Circuit breaker proposals by the Chicago Board Options Exchange, Inc.,[8] the Pacific Stock Exchange, Inc.[9] and the Cincinnati Stock Exchange, Inc.[10] were approved by the Commission on a permanent basis. In 1989, the Exchanges and the NASD filed, and the Commission approved, proposals to extend their respective pilot programs.[11] Subsequently, in 1990, 1991, 1992, 1993, and 1994, the Amex, NYSE, and Phlx filed, and the Commission approved, proposals to extend their respective pilot programs.[12]

In 1991 and 1993, the BSE filed, and the Commission approved, proposals to extend its pilot program.[13] In 1990, 1991, 1992, and 1993, the CHX filed, and the Commission approved, proposals to extend its pilot program.[14] In 1990, 1992, 1993, and 1994, the NASD filed, and the Commission approved, proposals to extend its pilot program.[15] The proposals for the Exchanges are nearing their expiration dates and the Amex, NYSE, and Phlx have filed with the Commission proposals to extend further their respective pilot programs until October 31, 1996. The BSE and CHX filings propose extending their respective pilot programs until October 31, 1997.

The circuit breaker mechanisms were enacted in the wake of the October 1987 Market Break. Both the Report of the Presidential Task Force on Market Mechanisms (''Brady Report'') and the Working Group's Interim Report[16] recommended that coordinated trading halts and reopening procedures be developed that would be implemented in all U.S. markets for equity and equity related products during large, rapid market declines.[17] In response, the SROs submitted proposals to implement circuit breaker procedures that are designed to substitute planned trading halts for unplanned and destabilizing market closings. In addition, the stock index futures exchanges have implemented parallel circuit breakers that were approved by the CFTC on a permanent basis.

III. Discussion

The Commission believes that the Exchanges' proposed rule changes are consistent with the requirements of the Act and the rules and regulations thereunder applicable to national securities exchanges. Specifically, the Commission believes the Exchanges' proposals are consistent with the requirements of Section 6(b)(5) of the Act[18] in that they are designed to remove impediments to, and perfect the mechanism of, a free and open market, and to protect investors and the public interest.

Since the Commission approved these proposals in 1988, the DJIA has not experienced a one day, 250-point decline that would trigger a market halt. Nevertheless, the Commission continues to believe that circuit breaker procedures are desirable to deal with potential strains that may develop during periods of extreme market volatility, and, accordingly, the Commission believes that the pilot programs should be extended. The Commission also believes that circuit breakers represent a reasonable means to retard a rapid, one day market decline that can have a destabilizing effect on the nation's financial markets and participants in these markets.

Accordingly, the Commission finds that the proposed rule changes filed by the Exchanges are consistent with the requirements of the Act and the rules and regulations thereunder applicable to a national securities exchange, and, in particular, the requirements of Section 6 and the rules and regulations thereunder.

The Commission finds good cause for approving the Exchanges' proposed rule changes prior to the thirtieth day after the date of publication of notice of filing thereof in the Federal Register because there are no changes being made to the

[4] Letter from William W. Uchimoto, First Vice President and General Counsel, Phlx, to Francois Mazur, Attorney, Office of Market Supervision, Division of Market Regulation, Commission, dated October 20, 1995 (''Amendment No. 1'').

[5] *See e.g.*, Securities Exchange Act Release Nos. 26198 (October 19, 1988), 53 FR 41637 (Amex and NYSE); 26218 (October 26, 1988), 53 FR 44137 (Midwest Stock Exchange, Incorporated (''MSE'')); 26357 (December 14, 1988), 53 FR 51182 (BSE); and 26386 (December 22, 1988), 53 FR 52904 (Phlx).

As of July 8, 1993, the MSE changed its name to the CHX. Securities Exchange Act Release No. 32488 (June 18, 1993), 58 FR 32484.

[6] If the 250-point trigger were reached within one hour of the scheduled close of trading for a day, or if the 400-point trigger were reached within two hours of the scheduled close of the trading day, trading would halt for the remainder of the day. If, however, the 250-point trigger were reached between one hour and one-half hour before the scheduled closing, or if the 400-point trigger were reached between two hours and one hour before the scheduled closing, the Exchanges would have the authority to use abbreviated reopening procedures either to permit trading to reopen before the scheduled closing or to establish closing prices.

[7] *See* Securities Exchange Act Release Nos. 26198 (also granting temporary approval to NASD policy statement on trading halts); 26218; 26357; and 26386, *supra* note 4.

[8] *See* Securities Exchange Act Release No. 26198, *supra* note 4.

[9] *See* Securities Exchange Act Release No. 26368 (December 16, 1988), 53 FR 51942.

[10] *See* Securities Exchange Act Release No. 26440 (January 10, 1989, 54 FR 1830.

[11] *See* Securities Exchange Act Release No. 27370 (October 23, 1989), 54 FR 43881 (order approving extension of Amex, BSE, MSE, NASD, NYSE and Phlx circuit breaker rules).

[12] *See* Securities Exchange Act Release Nos. 28580 (October 25, 1990), 55 FR 45895; 29868 (October 28, 1991), 56 FR 56535; 31387 (October 30, 1992), 57 FR 53157; 33120 (October 29, 1993, 58 FR 59503; and 34900 (October 26, 1995), 59 FR 54932 (orders approving extensions of Amex, NYSE, and Phlx circuit breaker rules).

[13] *See* Securities Exchange Act Release Nos. 29868 and 33120, *supra* note 11 (orders approving the extension of the BSE circuit breaker rules, the most recent approving the pilot through October 31, 1995).

[14] Securities Exchange Act Release Nos. 28580, 29868, 31387, and 33120, *supra* not 11 (orders approving the CHX circuit breaker rules, the most recent approving the pilot through October 31, 1995).

[15] *See* Securities Exchange Act Release Nos. 28694 (December 12, 1990), 55 FR 52119; 30304 (January 29, 1992), 57 FR 4658; 33292 (December 6, 1993), 58 FR 65214; and 35133 (December 21, 1994), 59 FR 67361 (orders approving NASD circuit breaker rules, the most recent approving the pilot through December 31, 1995).

[16] The Working Group in Financial Markets was established by the President in March 1988 to provide a coordinating framework for consideration, resolution, recommendation, and action on the complex issues raised by the market break in October 1987. The Working Group consists of the Chairmen of the Commission, Board of Governors of the Federal Reserve System and the Commodity Futures Trading Commission (''CFTC''), and the Under Secretary for Finance of the Department of the Treasury.

[17] In particular, the Working Group recommended a one-hour trading halt if the DJIA declined 250 points from its previous day's closing level, and a subsequent two-hour trading halt if the DJIA declined 400 points below its previous day's closing level. The Working Group also recommended that the NYSE use reopening procedures, similar to those used on Expiration Fridays, that are designed to enhance the information made public about market conditions.

[18] 15 U.S.C. § 78f(b)(5) (1988).

current provisions, which originally were subject to the full notice and comment procedures, and accelerated approval would enable the pilots to continue on an uninterrupted basis. Due to the importance of these circuit breakers for market confidence, soundness, and integrity, it is necessary and appropriate that these procedures continue uninterrupted. Therefore, the Commission believes that granting accelerated approval of the proposed rule changes is appropriate and consistent with Sections 6 and 19(b)(2) of the Act.

IV. Solicitation of Comments

Interested persons are invited to submit written data, views and arguments concerning the foregoing. Persons making written submissions should file six copies thereof with the Secretary, Securities and Exchange Commission, 450 Fifth Street NW., Washington, DC 20549. Copies of the submission, all subsequent amendments, all written statements with respect to the proposed rules changes that are filed with the Commission, and all written communications relating to the proposed rule changes between the Commission and any person, other than those that may be withheld from the public in accordance with the provisions of 5 U.S.C. 552, will be available for inspection and copying in the Commission's Public Reference Room. Copies of such filings also will be available for inspection and copying at the principal offices of the above-mentioned exchanges. All submissions should refer to File Nos. SR–AMEX–95–40, SR–BSE–95–15, SR–CHX–95–23, SR–NYSE–95–34, or SR–Phlx–95–72 and should be submitted by November 22, 1995.

V. Conclusion

IT IS THEREFORE ORDERED, pursuant to section 19(b)(2) of the Act,[19] that the Amex, NYSE, and Phlx proposed rule changes (SR–Amex–95–40, SR–NYSE–95–34 and SR–Phlx–95–72), are approved until October 31, 1996; and that the BSE and CHX proposed rule changes (SR–BSE–95–15 and SR–CHX–95–23) are approved until October 31, 1997).

For the Commission, by the Division of Market Regulation, pursuant to delegated authority.[20]

Margaret H. McFarland,

Deputy Secretary.

[FR Doc. 95–27004 Filed 10–31–95; 8:45 am]

BILLING CODE 8010–01–M

[19] 15 U.S.C. § 78s(b)(2) (1988).

[20] 17 CFR 200.30–3(a)(12) (1994).

[Rel. No. IC–21457; 811–4654]

Colonial Small Stock Index Trust; Notice of Application

October 26, 1995.

AGENCY: Securities and Exchange Commission (''SEC'').

ACTION: Notice of Application for Deregistration under the Investment Company Act of 1940 (the ''Act'').

APPLICANT: Colonial Small Stock Index Trust.

RELEVANT ACT SECTIONS: Order requested under section 8(f).

FILING DATES: The application was filed on September 22, 1995.

HEARING OR NOTIFICATION OF HEARING: An order granting the application will be issued unless the SEC orders a hearing. Interested persons may request a hearing by writing to the SEC's Secretary and serving applicants with a copy of the request, personally or by mail. Hearing requests should be received by the SEC by 5:30 p.m. on November 20, 1995, and should be accompanied by proof of service on applicants, in the form of an affidavit or, for lawyers, a certificate of service. Hearing requests should state the nature of the writer's interest, the reason for the request, and the issues contested. Persons may request notification of a hearing by writing to the SEC's Secretary.

ADDRESSES: Secretary, SEC, 450 5th Street, N.W., Washington, D.C. 20549. Applicant, One Financial Center, Boston, Massachusetts 02111.

FOR FURTHER INFORMATION CONTACT: David W. Grim, Law Clerk, at (202) 942–0571, or Robert A. Robertson, Branch Chief, at (202) 942–0564 (Division of Investment Management, Office of Investment Company Regulation).

SUPPLEMENTARY INFORMATION: The following is a summary of the application. The complete application may be obtained for a fee at the SEC's Public Reference Branch.

Applicant's Representations

1. Applicant is a registered open-end management investment company organized as a Massachusetts business trust. On May 2, 1986, applicant filed a Notification of Registration on Form N–8A pursuant to section 8(a) of the Act and a registration statement on Form N–1A under section 8(b) of the Act and under the Securities Act of 1933. The registration statement became effective on July 22, 1986, and the initial public offering commenced on July 25, 1986.

2. On April 12, 1991 and December 13, 1991, applicant's board of trustees approved an agreement and plan of reorganization (the ''Plan'') between applicant and Colonial Small Stock Fund (the ''Fund''), a newly organized series of Colonial Trust VI. At the December 13, 1991 meeting, the board made the findings required by rule 17a–8 under the Act.[1] The board approved the merger as a means of reducing certain expenses of applicant, such as state and federal filing fees, and enabling the implementation of certain changes in the trust agreement and bylaws, such as permitting the issuance of multiple classes of shares and providing for broader indemnification of trustees.

3. On September 16, 1992, applicant distributed proxy materials to its shareholders. At a special meeting on November 2, 1992, applicant's shareholders approved the reorganization.

4. Pursuant to the Plan, on November 6, 1992, applicant transferred its net assets to the Fund. In exchange for applicant's net assets, applicant received shares of the Fund with an aggregate net asset value equal to the value of such net assets. Following this exchange, applicant distributed the shares of the Fund received in connection with the reorganization to its shareholders on a *pro rata* basis. On the date of reorganization, applicant had 1,562,326.56 shares of beneficial interest outstanding, having an aggregate net asset value of $20,320,500.66 and a net asset value per share of $13.01.

5. The following expenses incurred in connection with the merger were borne by applicant: $2,100 in legal expenses, $576 in auditing expenses, $1,793 in printing expenses, $4,859 in mailing expenses, and $1,969 in proxy solicitation expenses.

6. As of the date of the application, applicant had no shareholders, assets, or liabilities. Applicant is not a party to any litigation or administrative proceeding. Applicant is neither engaged nor proposes to engage in any business activities other than those necessary for the winding-up of its affairs.

7. Applicant intends to file certificates of dissolution or similar documents in accordance with the law of the Commonwealth of Massachusetts after the receipt of requested relief.

[1] Rule 17a–8 provides an exemption from section 17(a) of the Act for certain reorganizations among registered investment companies that may be affiliated persons, or affiliated persons of an affiliated person, solely by reason of having a common investment adviser, common directors, and/or common officers.

For the Commission, by the Division of Investment Management, pursuant to delegated authority.

Margaret H. McFarland,

Deputy Secretary.

[FR Doc. 95–27157 Filed 10–31 –95; 8:45 am]

BILLING CODE 8010–01–M

[Release No. IC–21452; 812–9682]

Dimensional Fund Advisors Inc.; Notice of Application

October 25, 1995.

AGENCY: Securities and Exchange Commission (''SEC'').

ACTION: Notice of Application for an Order under Section 2(a)(9) of the Investment Company Act of 1940 (the ''1940 Act'').

APPLICANT: Dimensional Fund Advisors Inc. (''DFA'').

RELEVANT ACT SECTION: Order requested under section 2(a)(9).

SUMMARY OF APPLICATION: DFA seeks an order under section 2(a)(9) of the 1940 Act declaring that Rex A. Sinquefield, the Co-Chairman, Chief Investment Officer, and owner of 24.9% of the outstanding voting securities of DFA, ''controls'' DFA despite a presumptive lack of control under section 2(a)(9) by reason of his less than 25% share ownership. DFA seeks such a determination so that a proposed transfer of DFA securities causing Mr. Sinquefield's percentage ownership to increase to more than 25% will not result in the ''assignment,'' as such term is defined in section 2(a)(4) of the Act, of advisory agreements between DFA and its investment company clients.

FILING DATES: The application was filed on July 21, 1995 and amended on October 5, 1995.

HEARING OR NOTIFICATION OF HEARING: An order granting the application will be issued unless the SEC orders a hearing. Interested persons may request a hearing by writing to the SEC's Secretary and serving DFA with a copy of the request, personally or by mail. Hearing requests should be received by the SEC by 5:30 p.m. on November 20, 1995, and should be accompanied by proof of service on DFA, in the form of an affidavit or, for lawyers, a certificate of service. Hearing requests should state the nature of the writer's interest, the reason for the request, and the issues contested. Persons may request notification of a hearing by writing to the Secretary of the SEC.

ADDRESSES: Secretary, SEC, 450 Fifth Street, N.W., Washington, D.C. 20549. DFA, 1299 Ocean Avenue, Santa Monica, California 90401.

FOR FURTHER INFORMATION CONTACT: H.R. Hallock, Jr., Special Counsel, at (202) 942–0564, or C. David Messman, Branch Chief, at (202) 942–0564 (Division of Investment Management, Office of Investment Company Regulation).

SUPPLEMENTARY INFORMATION: The following is a summary of the application. The complete application may be obtained for a fee at the SEC's Public Reference Branch.

Applicant's Representations

1. DFA, a Delaware corporation, is a registered investment adviser under the Investment Advisers Act of 1940. Among its other institutional clients, DFA serves as investment adviser to DFA Investment Dimensions Group Inc., The DFA Investment Trust Company and Dimensional Emerging Markets Fund Inc., each of which is a registered investment company under the 1940 Act (collectively, the ''Funds'').

2. DFA's two founding principals are David G. Booth (''Booth'') and Rex A. Sinquefield (''Sinquefield''), who are the Chief Executive Officer and the Chief Investment Officer, respectively, and Co-Chairmen of DFA. Booth owns 26,000 shares, or 36.1% and Sinquefield, together with his wife, owns 18,000 shares, or 24.9%, of the 72,001 currently outstanding shares of common stock of DFA. Of the remaining outstanding shares, 16,879 shares, or about 23.4%, are owned by other individual stockholders, and 11,122 shares, or about 15.4%, are together owned by two institutional shareholders, Kemper Financial Services, Inc. (''Kemper''), and Schroders Capital Management International Inc. (''Schroders'').

3. In connection with their purchases of DFA common stock, all the stockholders of DFA, other than Kemper and Schroders, have entered into voting agreements constituting irrevocable proxies to vote their shares in the election of directors in favor of Booth and Sinquefield and such other persons as the two principals jointly designate. The voting agreements effectively require Booth and Sinquefield to act in concert to exercise their voting control. Since Booth and Sinquefield together control about 85% of the vote in the election of directors, they have sufficient voting power to elect all the members of the board. There are currently six directors of DFA, but because DFA's certificate of incorporation provides for plurality voting in the election of directors, no stockholder other than Booth and Sinquefield has the power to elect even a single director.

4. Since they started DFA in 1981, Booth and Sinquefield have shared the managerial responsibilities of DFA. Their executive duties are often interchangeable, and major business decisions are always made by their mutual agreement. They both have contributed significantly to the development of DFA's investment products, and they jointly determine DFA's management and investment policies. They also share responsibility for oversight of the administrative and operational functions of the business.

5. Pursuant to a Stock Purchase Agreement among DFA, Kemper and Booth, dated July 20, 1995, DFA proposes to purchase 3,622 shares of its stock from Kemper. Such repurchase of shares of DFA would decrease the number of DFA shares outstanding and result in Sinquefield's percentage share ownership increasing from 24.9% to 26.3%. In addition to the pending Kemper transaction, DFA has from time to time considered or engaged in other share transactions that directly or indirectly affect Sinquefield's percentage share ownership. Pursuant to an outstanding warrant and note, for example, Schroders is entitled to receive shares of DFA stock equal to 15% of DFA's shares issued and outstanding immediately following its exercise of the warrant. If Schroders exercises the warrant after the proposed repurchase by DFA of its shares from Kemper, Sinquefield's percentage ownership of DFA shares would decrease from 26.3% to 21.8%.

Applicant's Legal Analysis

1. Section 2(a)(9) of the 1940 Act defines ''control'' to mean ''the power to exercise a controlling influence over the management or policies of a company, unless such power is solely the result of an official position with such company.'' The section provides that any person who owns beneficially less than 25% of the outstanding voting securities of a company shall be presumed not to control such company. Section 2(a)(9) further provides that any such presumption may be rebutted by evidence, but shall continue until the SEC makes a determination to the contrary by order on application by an interested person.

2. DFA seeks a determination that the presumption created under section 2(a)(9) has been rebutted by the evidence with respect to Sinquefield. DFA further seeks a determination that, if Sinquefield's percentage ownership is caused to exceed 25%, the subsequent issuance of additional shares of DFA

common stock, such as upon the anticipated exercise by Schroders of its warrant, or such other share transactions having the effect of reducing Sinquefield's percentage of stock ownership to 25% or less, would not cause any actual change in Sinquefield's existing control over DFA.

3. As a result of the principals' shared voting power created by the voting agreements and in light of the other factual circumstances described above, DFA submits that Sinquefield, acting in concert with Booth, does now and always has exerted a controlling influence over the management and policies of DFA. Under any currently contemplated or envisioned scenario in the future, DFA's two controlling principals would continue to exert controlling influence over the management of DFA and no other person would acquire control.

4. DFA further submits that, as the presumption of section 2(a)(9) that Sinquefield does not now ''control'' DFA arguably has been rebutted by the facts set forth above, neither the pending share transaction with Kemper, nor any other such transaction directly or indirectly resulting in an increase or decrease in Sinquefield's percentage stock ownership, will cause a change of ''control'' within the meaning of section 2(a)(9). Nor will such transactions constitute a ''transfer of a controlling block'' of DFA shares resulting in an ''assignment'' within the meaning of section 2(a)(4). Under section 15(a)(4) of the 1940 Act, any such assignment would result in the automatic termination of DFA's investment advisory agreements with the Funds. If the agreements were terminated, new investment advisory agreements would have to be approved by each Fund's directors and shareholders under section 15(a).

5. DFA agrees that any order granted on the application will remain in effect only so long as Sinquefield continues to have substantially the same (or greater) management responsibilities and responsibility for oversight of the administrative and operational functions of DFA. Sinquefield also will continue to own, jointly or solely, at least 12.5% of DFA's outstanding shares. In addition, while it currently is contemplated that no share transactions will be effected by DFA that would have the effect of reducing Booth and Sinquefield's aggregate ownership to less than 50%, in no event would any share transactions be effected by DFA during the pendency of the requested order that would have the effect of reducing Booth and Sinquefield's aggregate ownership to less than 25%. Finally, DFA agrees that any order granted on the application will remain in effect only so long as Sinquefield, either jointly or solely, continues to control at least a majority of the voting power of DFA's outstanding common stock with respect to the election of directors through the above-described voting agreements or similar binding contractual arrangements.

For the Commission, by the Division of Investment Management, under delegated authority.

Margaret H. McFarland,

Deputy Secretary.

[FR Doc. 95–27123 Filed 10–31–95; 8:45 am]

BILLING CODE 8010–01–M

[Investment Company Act Release No. 21454; 811–7207]

Dreyfus Equity Funds, Inc.; Notice of Application

October 25, 1995.

AGENCY: Securities and Exchange Commission (''SEC'').

ACTION: Notice of Application for Deregistration under the Investment Company Act of 1940 (the ''Act'').

APPLICANT: Dreyfus Equity Funds, Inc.

RELEVANT ACT SECTION: Section 8(f).

SUMMARY OF APPLICATION: Applicant requests an order declaring that it has ceased to be an investment company.

FILING DATE: The application was filed on October 4, 1995.

HEARING OR NOTIFICATION OF HEARING: An order granting the application will be issued unless the SEC orders a hearing. Interested persons may request a hearing by writing to the SEC's Secretary and serving applicant with a copy of the request, personally or by mail. Hearing requests should be received by the SEC by 5:30 p.m. on November 20, 1995, and should be accompanied by proof of service on the applicant, in the form of an affidavit or, for lawyers, a certificate of service. Hearing requests should state the nature of the writer's interest, the reason for the request, and the issues contested. Persons may request notification of a hearing by writing to the SEC's Secretary.

ADDRESSES: Secretary, SEC, 450 Fifth Street, N.W., Washington, D.C. 20549. Applicant, 200 Park Avenue, New York, New York 10166.

FOR FURTHER INFORMATION CONTACT: Diane L. Titus, Paralegal Specialist, at (202) 942–0584, or C. David Messman, Branch Chief, at (202) 942–0564 (Division of Investment Management, Office of Investment Company Regulation).

SUPPLEMENTARY INFORMATION: The following is a summary of the application. The complete application may be obtained for a fee from the SEC's Public Reference Branch.

Applicant's Representations

1. Applicant is an open-end diversified management investment company organized as a Maryland corporation. On July 27, 1994, applicant filed a notification of registration pursuant to section 8(a) of the Act on Form N–8A and a registration statement under the Act and the Securities Act of 1933. Applicant's registration statement has not been declared effective and applicant has not made a public offering of its shares.

2. Applicant has not issued or sold any securities, except to its sole shareholder and sponsor, The Dreyfus Corporation. As of the date of the filing of the application, applicant has no shareholders, liabilities or assets. Applicant is not a party to any litigation or administrative proceeding.

3. Pursuant to a meeting held on September 14, 1995, the applicant's Board of Directors determined that it was advisable and in the best interests of the applicant to withdraw its registration statement with the SEC, cease to be registered as an investment company, and to liquidate its assets and distribute the proceeds to The Dreyfus Corporation.

4. Applicant is not now engaged, nor does it propose to engage in any business activities other than those necessary for the winding-up of its affairs.

For the SEC, by the Division of Investment Management, under delegated authority.

Margaret H. McFarland,

Deputy Secretary.

[FR Doc. 95–27124 Filed 10–31–95; 8:45 am]

BILLING CODE 8010–01–M

[Investment Company Act Release No. 21453; 811–7213]

Dreyfus Omni Fund, Inc.; Notice of Application

October 25, 1995.

AGENCY: Securities and Exchange Commission (''SEC'').

ACTION: Notice of Application for Deregistration under the Investment Company Act of 1940 (the ''Act'').

APPLICANT: Dreyfus Omni Fund, Inc.

RELEVANT ACT SECTION: Section 8(f).

SUMMARY OF APPLICATION: Applicant requests an order declaring that it has ceased to be an investment company.

FILING DATE: The application was filed on October 4, 1995.

HEARING OR NOTIFICATION OF HEARING: An order granting the application will be issued unless the SEC orders a hearing. Interested persons may request a hearing by writing to the SEC's Secretary and serving applicant with a copy of the request, personally or by mail. Hearing requests should be received by the SEC by 5:30 p.m. on November 20, 1995, and should be accompanied by proof of service on the applicant, in the form of an affidavit or, for lawyers, a certificate of service. Hearing requests should state the nature of the writer's interest, the reason for the request, and the issues contested. Persons may request notification of a hearing by writing to the SEC's Secretary.

ADDRESSES: Secretary, SEC, 450 Fifth Street, N.W., Washington, D.C. 20549. Applicant, 200 Park Avenue, New York, New York 10166.

FOR FURTHER INFORMATION CONTACT: Diane L. Titus, Paralegal Specialist, at (202) 942–0584, or C. David Messman, Branch Chief, at (202) 942–0564 (Division of Investment Management, Office of Investment Company Regulation).

SUPPLEMENTARY INFORMATION: The following is a summary of the application. The complete application may be obtained for a fee from the SEC's Public Reference Branch.

Applicant's Representations

1. Applicant is an open-end diversified management investment company organized as a Maryland corporation. On August 26, 1994, applicant filed a notification of registration pursuant to section 8(a) of the Act on Form N–8A and a registration statement under the Act and the Securities Act of 1933. Applicant's registration statement has not been declared effective and applicant has not made a public offering of its shares.

2. Applicant has not issued or sold any securities, except to its sole shareholder and sponsor, The Dreyfus Corporation. As of the date of the filing of the application, applicant has no shareholders, liabilities or assets. Applicant is not a party to any litigation or administrative proceeding.

3. Pursuant to a meeting held on September 14, 1995, the applicant's Board of Directors determined that it was advisable and in the best interests of the applicant to withdraw its registration statement with the SEC, cease to be registered as an investment company, and to liquidate its assets and distribute the proceeds to the sole shareholder and sponsor.

4. Applicant is not now engaged, nor does it propose to engage in any business activities other than those necessary for the winding-up of its affairs.

For the SEC, by the Division of Investment Management, under delegated authority.

Margaret H. McFarland,

Deputy Secretary.

[FR Doc. 95–27126 Filed 10–31–95, 8:45 am]

BILLING CODE 8010–01–M

[Investment Company Act Release No. 21456; 811–5713]

Franklin Tax-Free Advantage Fund; Notice of Application

October 25, 1995.

AGENCY: Securities and Exchange Commission (''SEC'').

ACTION: Notice of application for deregistration under the Investment Company Act of 1940 (the ''Act'').

APPLICANT: Franklin Tax-Free Advantage Fund.

RELEVANT ACT SECTION: Section 8(f).

SUMMARY OF APPLICATION: Applicant requests an order declaring that it has ceased to be an investment company.

FILING DATE: The application was filed on October 13, 1995.

HEARING OR NOTIFICATION OF HEARING: An order granting the application will be issued unless the SEC orders a hearing. Interested persons may request a hearing by writing to the SEC's Secretary and serving applicant with a copy of the request, personally or by mail. Hearing requests should be received by the SEC by 5:30 p.m. on November 20, 1995, and should be accompanied by proof of service on the applicant, in the form of an affidavit or, for lawyers, a certificate of service. Hearing requests should state the nature of the writer's interest, the reason for the request, and the issues contested. Persons may request notification of a hearing by writing to the SEC's Secretary.

ADDRESSES: Secretary, SEC, 450 Fifth Street, NW., Washington, DC 20549. Applicant, 777 Mariners Island Boulevard, San Mateo, California 94404.

FOR FURTHER INFORMATION CONTACT: Diane L. Titus, Paralegal Specialist, at (202) 942–0584, or C. David Messman, Branch Chief, at (202) 942–0564 (Division of Investment Management, Office of Investment Company Regulation).

SUPPLEMENTARY INFORMATION: The following is a summary of the application. The complete application may be obtained for a fee from the SEC's Public Reference Branch.

Applicant's Representations

1. Applicant is a closed-end diversified management investment company organized as a business trust under the laws of the Commonwealth of Massachusetts. On December 30, 1988, applicant filed a notification of registration pursuant to section 8(a) of the Act on Form N–8A and a registration statement under the Act and the Securities Act of 1933. Applicant's registration statement has not been declared effective and applicant has not made a public offering of its shares.

2. Applicant has not issued or sold any securities. As of the date of the filing of the application, applicant has no shareholders, liabilities or assets. Applicant is not a party to any litigation or administrative proceeding.

3. On July 18, 1995, the fund's surviving Trustees signed an unanimous written consent, authorizing the dissolution of the applicant with the State of Massachusetts and its deregistration with the SEC.

4. Applicant is not now engaged, nor does it propose to engage in any business activities other than those necessary for the winding-up of its affairs.

For the SEC, by the Division of Investment Management, under delegated authority.

Margaret H. McFarland,

Deputy Secretary.

[FR Doc. 95–27127 Filed 10–31–95; 8:45 am]

BILLING CODE 8010–01–M

[Investment Company Act Release No. 21455; 811–7211]

Premier Small Company Value Fund, Inc.; Notice of Application

October 25, 1995.

AGENCY: Securities and Exchange Commission (''SEC'').

ACTION: Notice of Application for Deregistration under the Investment Company Act of 1940 (the ''Act'').

APPLICANT: Premier Small Company Value Fund, Inc.

RELEVANT ACT SECTION: Section 8(f).

SUMMARY OF APPLICATION: Applicant requests an order declaring that it has ceased to be an investment company.

FILING DATE: The application was filed on October 4, 1995.

HEARING OR NOTIFICATION OF HEARING: An order granting the application will be issued unless the SEC orders a hearing. Interested persons may request a

hearing by writing to the SEC's Secretary and serving applicant with a copy of the request, personally or by mail. Hearing requests should be received by the SEC by 5:30 p.m. on November 20, 1995, and should be accompanied by proof of service on the applicant, in the form of an affidavit or, for lawyers, a certificate of service. Hearing requests should state the nature of the writer's interest, the reason for the request, and the issues contested. Persons may request notification of a hearing by writing to the SEC's Secretary.

ADDRESSES: Secretary, SEC, 450 Fifth Street, N.W., Washington, D.C. 20549. Applicant, 200 Park Avenue, New York, New York 10166.

FOR FURTHER INFORMATION CONTACT: Diane L. Titus, Paralegal Specialist, at (202) 942–0584, or C. David Messman, Branch Chief, at (202) 942–0564 (Division of Investment Management, Office of Investment Company Regulation).

SUPPLEMENTARY INFORMATION: The following is a summary of the application. The complete application may be obtained for a fee from the SEC's Public Reference Branch.

Applicant's Representations

1. Applicant is an open-end diversified management investment company organized as a Maryland corporation. On August 17, 1994, applicant filed a notification of registration pursuant to section 8(a) of the Act on Form N–8A and a registration statement under the Act and the Securities Act of 1933. Applicant's registration statement has not been declared effective and applicant has not made a public offering of its shares.

2. Applicant has not issued or sold any securities, except to its sole shareholder and sponsor, The Dreyfus Corporation. As of the date of the filing of the application, applicant has no shareholders, liabilities or assets. Applicant is not a party to any litigation or administrative proceeding.

3. Pursuant to a meeting held on September 14, 1995, the applicant's Board of Directors determined that it was advisable and in the best interests of the applicant to withdraw its registration statement with the SEC, cease to be registered as an investment company, and to liquidate its assets and distribute the proceeds to The Dreyfus Corporation.

4. Applicant is not now engaged, nor does it propose to engage in any business activities other than those necessary for the winding-up of its affairs.

For the SEC, by the Division of Investment Management, under delegated authority.

Margaret H. McFarland,

Deputy Secretary.

[FR Doc. 95–27125 Filed 10–31–95; 8:45 am]

BILLING CODE 8010–01–M

[Investment Company Act Release No. 21450; 811–7229]

Premier Opportunity Fund, Inc.; Notice of Application

October 25, 1995.

AGENCY: Securities and Exchange Commission (''SEC'').

ACTION: Notice of application for deregistration under the Investment Company Act of 1940 (the ''Act'').

APPLICANT: Premier Opportunity Fund, Inc.

RELEVANT ACT SECTION: Section 8(f).

SUMMARY OF APPLICATION: Applicant requests an order declaring that it has ceased to be an investment company.

FILING DATE: The application was filed on October 4, 1995.

HEARING OR NOTIFICATION OF HEARING: An order granting the application will be issued unless the SEC orders a hearing. Interested persons may request a hearing by writing to the SEC's Secretary and serving applicant with a copy of the request, personally or by mail. Hearing requests should be received by the SEC by 5:30 p.m. on November 20, 1995, and should be accompanied by proof of service on the applicant, in the form of an affidavit or, for lawyers, a certificate of service. Hearing requests should state the nature of the writer's interest, the reason for the request, and the issues contested. Persons may request notification of a hearing by writing to the SEC's Secretary.

ADDRESSES: Secretary, SEC, 450 Fifth Street, N.W., Washington, D.C. 20549. Applicant, 200 Park Avenue, New York, New York 10166.

FOR FURTHER INFORMATION CONTACT: Diane L. Titus, Paralegal Specialist, at (202) 942–0584, or C. David Messman, Branch Chief, at (202) 942–0564 (Division of Investment Management, Office of Investment Company Regulation).

SUPPLEMENTARY INFORMATION: The following is a summary of the application. The complete application may be obtained for a fee from the SEC's Public Reference Branch.

Applicant's Representations

1. Applicant is an open-end diversified management investment company organized as a Maryland corporation. On October 25, 1994, applicant filed a notification of registration pursuant to section 8(a) of the Act on Form N–8A and a registration statement under the Act and the Securities Act of 1933. Applicant's registration statement has not been declared effective and applicant has not made a public offering of its shares.

2. Applicant has not issued or sold any securities, except to its sole shareholder and sponsor, The Dreyfus Corporation. As of the date of the filing of the application, applicant has no shareholders, liabilities or assets. Applicant is not a party to any litigation or administrative proceeding.

3. Pursuant to written consent, the applicant's sole Director determined that it was advisable and in the best interests of the applicant to withdraw its registration statement with the SEC and cease to be registered as an investment company.

4. Applicant is not now engaged, nor does it propose to engage in any business activities other than those necessary for the winding-up of its affairs.

For the SEC, by the Division of Investment Management, under delegated authority.

Margaret H. McFarland,

Deputy Secretary.

[FR Doc. 95–27122 Filed 10–31–95; 8:45 am]

BILLING CODE 8010–01–M

[Release No. IC–21451; 813–140]

Sixty Wall Street Fund 1995, L.P., et al.; Notice of Application

October 25, 1995.

AGENCY: Securities and Exchange Commission (''SEC'').

ACTION: Notice of application for exemption under the Investment Company Act of 1940 (the ''Act'').

APPLICANTS: Sixty Wall Street Fund 1995, L.P. (the ''1995 Partnership''), Sixty Wall Street SBIC Fund, L.P. (the ''SBIC Partnership,'' and together with the 1995 Partnership, the ''Initial Partnerships''), and J.P. Morgan & Co. Incorporated (''JP Morgan'').

RELEVANT ACT SECTIONS: Applicants request an order under sections 6(b) and 6(e) granting an exemption from all provisions of the Act except section 9, certain provisions of sections 17 and 30, sections 36 through 53, and the rules and regulations thereunder.

SUMMARY OF APPLICATION: Applicants request an order, on behalf of the Initial Partnerships and certain other partnerships or other investment vehicles organized by JP Morgan that

may be offered to the same class of investors (the ''Subsequent Partnerships,'' and together with the Initial Partnerships, the ''Partnerships''), that would grant an exemption from most provisions of the Act, and would permit certain affiliated and joint transactions. Each Partnership will be an employees' securities company within the meaning of section 2(a)(13) of the Act. Partnership interests will be offered to eligible employees, officers, directors, and persons on retainer of JP Morgan and its affiliates.

FILING DATES: The application was filed on March 17, 1995 and amended on August 4, 1995. By letter dated October 20, 1995, applicants' counsel stated that an additional amendment, the substance of which is incorporated herein, will be filed during the notice period.

HEARING OR NOTIFICATION OF HEARING: An order granting the application will be issued unless the SEC orders a hearing. Interested persons may request a hearing by writing to the SEC's Secretary and serving applicants with a copy of the request, personally or by mail. Hearing requests should be received by the SEC by 5:30 p.m. on November 20, 1995, and should be accompanied by proof of service on the applicants, in the form of an affidavit or, for lawyers, a certificate of service. Hearing requests should state the nature of the writer's interest, the reason for the request, and the issues contested. Persons may request notification of a hearing by writing to the SEC's Secretary.

ADDRESSES: Secretary, SEC, 450 Fifth Street, N.W., Washington, D.C. 20549. Applicants, 60 Wall Street, New York, New York 10260.

FOR FURTHER INFORMATION CONTACT: Mary Kay Frech, Senior Attorney, at (202) 942–0579, or Robert A. Robertson, Branch Chief, at (202) 942–0564 (Division of Investment Management, Office of Investment Company Regulation).

SUPPLEMENTARY INFORMATION: The following is a summary of the application. The complete application may be obtained for a fee at the SEC's Public Reference Branch.

Applicants' Representations

1. JP Morgan and its affiliates, as defined in rule 12b–2 under the Securities Exchange Act of 1934 (the ''Exchange Act''), (the ''JP Morgan Group'') constitute a global financial services firm. J.P. Morgan Securities Inc. (''JP Morgan Securities''), a wholly-owned subsidiary of JP Morgan, is the principal broker-dealer affiliate of the JP Morgan Group and is registered as a broker-dealer under the Exchange Act.

2. The Initial Partnerships are Delaware limited partnerships that represent the first of several anticipated annual investment programs (each, an ''Annual Investment Program'') that are to be formed to enable certain employees, officers, directors, and persons on retainer of the JP Morgan Group to pool their investment resources and to participate in various types of investment opportunities. The pooling of resources permits diversification and participation in investments that usually would not be offered to individual investors. The goal of the Partnerships is to reward and retain personnel by enabling them to participate in investment opportunities that otherwise would not be available to them and to attract other individuals to the JP Morgan Group.

3. The Partnerships will operate as closed-end management investment companies. The Partnerships will seek to achieve a high rate of return through long-term capital appreciation in risk capital opportunities. The Initial Partnerships will co-invest alongside J.P. Morgan Capital Corporation, a Delaware corporation and wholly-owned subsidiary of JP Morgan (''JPMCC'') and its subsidiaries (collectively with JPMCC, ''JP Morgan Capital''), in investments made by JP Morgan Capital during the 1995 calendar year. Similarly, with respect to a subsequent Annual Investment Program, it is anticipated that a Subsequent Partnership and the SBIC Partnership will co-invest alongside JP Morgan Capital pursuant to such Annual Investment Program in investments made by JP Morgan Capital.

4. The general partner or other investment manager of each Partnership (the ''General Partner'') will be an affiliate of JP Morgan and will be registered as an investment advisor under the Investment Advisers Act of 1940 (the ''Advisers Act''), or will be excluded from the definition of investment adviser under the Advisers Act because it is a bank or a bank holding company.

5. Interests in each Partnership will be offered without registration under a claim of exemption pursuant to section 4(2) of the Securities Act of 1933 (the ''Securities Act'').[1] Interests will be offered and sold only to (a) ''Eligible Employees'' of the JP Morgan Group, (b) immediate family members of an Eligible Employee (at the discretion of JP Morgan and at the request of an Eligible Employee) (''Qualified Family Members''), or (c) trusts or other investment vehicles for the benefit of such Eligible Employees and/or the benefit of their immediate families (''Qualified Investment Vehicles'' and, collectively with Qualified Family Members, ''Qualified Participants''). To be an Eligible Employee, an individual must be a current or former employee, officer, director, or person on retainer of an entity within the JP Morgan Group and, except for certain individuals described in paragraph 6 below, an ''accredited investor'' meeting the income requirements set forth in rule 501(a)(6) of Regulation D under the Securities Act. To be a Qualified Family Member, the immediate family member also must be an ''accredited investor'' meeting the income requirements set forth in rule 501(a)(6) of Regulation D. The limitations on the class of persons who may acquire interests (''Limited Partners''), in conjunction with other characteristics of the Partnership, will qualify the Partnership as an ''employees' securities company'' under section 2(a)(13) of the Act.

6. Eligible Employees who are not accredited investors but who manage the day-to-day affairs of a Partnership may be permitted to invest their own funds through the General Partner of the Partnership if such individuals had reportable income from all sources in the calendar year immediately preceding such person's participation in excess of $120,000, and have a reasonable expectation of reportable income in the years in which such person will be required to invest his or her own funds of at least $150,000. These individuals will have primary responsibility for operating the partnership. Such responsibility will include, among other things, evaluating and monitoring investments for the Partnership, communicating with the Limited Partners, and maintaining the books and records of the Partnership. Accordingly, all such individuals will be closely involved with, and knowledgeable with respect to, the Partnership's affairs and the status of Partnership investments.

7. Only a small portion of the JP Morgan Group's personnel qualify as Eligible Employees. The Eligible Employees are experienced professionals in the banking or financial services business, or in the administrative, financial, accounting, or operational activities related thereto. No Eligible Employee will be required to invest in any Partnership.

8. The management and control of each Partnership, including all

[1] Section 4(2) exempts transactions by an issuer not involving any public offering from the Securities Act's registration requirement.

investment decisions, will be vested in the General Partner. The General Partner of each Partnership will be an entity (the ''JPM Subsidiary Corporation'') that is directly or indirectly controlled by JP Morgan. Thus, the investment discretion over a Partnership's investment portfolio will be exercised by or, directly or indirectly, under the direction of the board of directors or other committee serving similar functions (the ''Board'') of the JPM Subsidiary Corporation. Each Board, among other things, will act as the investment committee of the Partnership responsible for approving all investment and valuation decisions. The day-to-day affairs of each Partnership will be managed by individuals who are officers or employees of an entity within the JP Morgan Group.

9. The General Partner of each Partnership will pay its normal operating expenses, including rent and salaries of its personnel and certain expenses. To the extent any expenses are not borne by the General Partner, the Partnership will be required to pay such expenses. Such expenses may include, without limitation, the fees, commissions, and expenses of an entity within the JP Morgan Group for services performed by such entity for the Partnership such as, for example, brokerage or clearing services in the Partnership's portfolio securities.

10. In the case of an Annual Investment Program (other than the 1995 Annual Investment Program), the General Partner of a Partnership may be paid an annual management fee, generally determined as a percentage of assets under management, invested capital, or aggregate commitments. The General Partner of a Partnership also may be entitled to receive a performance-based fee (or ''carried interest'') of a specified percentage based on the gains and losses of such Partnership's or each Limited Partner's investment portfolio.[2] In addition, the General Partner may be entitled to other compensation, such as acquisition fees in connection with the purchase of Partnership investments and disposition fees in connection with the disposition of Partnership investments.

11. With respect to each Annual Investment Program, the terms of each Partnership will be disclosed to the Eligible Employees at the time they are offered the right to subscribe for interests in the Partnership. Each Partnership generally will be required to invest ''lock-step'' in investment opportunities in which JP Morgan Capital invests in the year of the Annual Investment Program. Such Partnership's co-investment generally will bear the same proportion to the aggregate amount of such investment by JP Morgan Capital and such Partnership as the aggregate capital commitments of the Partnerships (to which such Annual Investment Program relates) bear to the aggregate amount of investments made by JP Morgan Capital and such Partnerships during such year. However, (a) a Partnership will not co-invest ''lock-step'' with JP Morgan Capital to the extent necessary to address regulatory, tax, or other legal considerations, (b) certain types of investments made by JP Morgan Capital, such as investments in certain foreign issuers, may be excluded from a Partnership's co-investments, subject to review by the General Partner of such Partnership, and (c) the amount of any co-investment by a Partnership may be subject to certain adjustments by the General Partner of such Partnership. The manner in which investment opportunities will be allocated between a Partnership and JP Morgan Capital and any exceptions to the requirement that such Partnership co-invest ''lock-step'' with JP Morgan Capital will be disclosed to the Eligible Employees at the time they are offered the right to subscribe for interests in the Partnerships to which such Annual Investment Program relates.

12. It is possible that JP Morgan Capital and a Partnership may co-invest in a portfolio company alongside an investment fund or account, organized for the benefit of investors who are not affiliated with the JP Morgan Group, over which an entity within the JP Morgan Group (other than JP Morgan Capital) exercises investment discretion (a ''Third Party Fund''). These unaffiliated investors include institutional investors such as public and private pension funds, foundations, endowments, and corporations, and high net worth individuals, in each case both domestic and foreign. Notwithstanding the fact that the terms applicable to the investment by the Third Party Fund may differ from the terms of the relevant investment held by the Partnership or JP Morgan Capital, and the ''lock-step'' disposition requirement will not apply to the Third Party Fund, the interests of the Eligible Employees participating in a Partnership will be adequately protected because JP Morgan Capital will continue to be subject to all of the conditions described herein with respect to the making and disposition of investments pursuant to any Annual Investment Program. Moreover, applicants believe that the relationship of the Partnership to the Third Party Fund, in the context of the application, is fundamentally different from the Partnerships' relationship to the JP Morgan Group. The focus of, and the rationale for, the protections contained in the application are to protect the Partnerships from any overreaching by the JP Morgan Group in the employer/employee context, whereas the same concerns are not present with respect to the Partnerships vis-a-vis the investors of a Third Party Fund.

13. Subject to the terms of the applicable Partnership agreement and the related co-investment agreement with JP Morgan Capital, a Partnership will be permitted to enter into transactions involving (a) an entity within the JP Morgan Group (including without limitation JP Morgan Capital), (b) a portfolio company, (c) any partner or person or entity related to any partner, (d) a Third Party Fund, or (e) any partner or other investor of a Third Party Fund that is not an entity within the JP Morgan Group, or any affiliate (as defined in rule 12b–2 under the Exchange Act) of such partner or other investor (a ''Third Party Investor''). Such transactions may include, without limitation, the purchase or sale by the Partnership of an investment, or an interest therein, from or to any entity within the JP Morgan Group (including without limitation JP Morgan Capital or a Third Party Fund), acting as principal. With regard to such transactions, the Board must determine prior to entering into such transaction that the terms thereof are fair to the partners and the Partnership.

14. In order to ensure that Eligible Employees participating in any Partnership will not be subject to overreaching on the part of JP Morgan Capital and that the interests of the Eligible Employees are adequately protected, JP Morgan Capital will be required, except as permitted under condition 3 below, to give each Partnership the opportunity to sell or otherwise dispose of its investments prior to or concurrently with, and on the same terms as, sales or other dispositions by JP Morgan Capital. By imposing this ''lock-step'' disposition requirement on JP Morgan Capital, the interests of the Eligible Employees participating in a Partnership are aligned with JP Morgan Capital's interests, thus creating a substantial

[2] A ''carried interest'' is an allocation to the General Partner based on net gains in addition to the amount allocable to the General Partner that is in proportion to its capital contributions. Any carried interest will be structured to comply with the requirements of rule 205–3 under the Advisers Act.

community of interest among the Eligible Employees and JP Morgan Capital.

15. Interests in a Partnership will be non-transferable, except with the prior written consent of the General Partner of the Partnership, which consent may be withheld in its sole discretion. In any event, no person or entity will be admitted to the Partnership as a partner unless such person or entity is: (a) an Eligible Employee, (b) a Qualified Participant, or (c) an entity within the JP Morgan Group. Upon the death of a Limited Partner, or such Limited Partner becoming incompetent, insolvent, incapacitated, or bankrupt, such Limited Partner's estate or legal representative will succeed to the Limited Partner's interest as an assignee for the purpose of settling such Limited Partner's estate or administering such Limited Partner's property, but may not become a Limited Partner.

16. Interests in a partnership may be redeemable by the Partnership upon the Limited Partner's termination of employment from the JP Morgan Group. Alternatively, an entity within JP Morgan Group may have the right to purchase a Limited Partner's interest upon such termination of employment. The terms upon which an interest may be so redeemed or purchased, including the manner in which the redemption or purchase price will be determined, will be fully disclosed to Eligible Employees at the time they are offered the right to subscribe for the interest. In any event, with respect to a redemption or purchase, the redemption or purchase price will not be less than the lower of (a) the amount invested plus interest calculated at a rate based on three-month LIBOR for the period since the investment, and (b) the fair value (as determined by the General Partner in good faith and in accordance with its customary valuation practices) of the interest at the end of the Partnership's's fiscal year in which such termination occurs, less amounts, if any, forfeited by the Limited Partner for failure to make required capital contributions. Such forfeited amounts will not include any penalty amount with respect to such redemption or purchase.

17. With respect to the 1995 Annual Investment Program, except as described below, the Initial Partnerships will co-invest in all investments made by JP Morgan Capital in 1995. The 1995 Partnership will co-invest in investments made by JP Morgan Capital other than investments made by JP Morgan Investment Corporation (''JPMIC''), a small business investment company licensed under the Small Business Investment Act and a wholly-owned subsidiary of JPMCC. The SBIC Partnership, which also will be licensed as a small business investment company under the Small Business Investment Act of 1958 (the ''Small Business Investment Act''), will co-invest in investments made by JPMIC, thereby increasing the amount of funds available for investments is small business. Upon receipt of the requested order, the Limited Partners will be admitted to the 1995 Partnership. After such admission and pending the making of investments, all funds contributed to the 1995 Partnership by the Limited Partners will be loaned by the 1995 Partnership to JPMCC at a rate of interest equal to 12-month LIBOR plus ½%.

18. The Initial Partnerships have entered into an investment agreement with JP Morgan Capital pursuant to which the Initial Partnerships have agreed to purchase their pro rata share of each investment made by JP Morgan Capital in 1995, except for the following limited exceptions. In the case of the 1995 Partnership, the 1995 Partnership generally will not participate in certain foreign investments where the obligation to make such investment was created on or before December 31, 1994. In addition, the Limited Partners have been advised that the 1995 Partnership will not participate in one specific investment made by JP Morgan Capital in 1995. In the case of the SBIC Partnership, it is possible that the SBIC Partnership may not be able to co-invest in all investments made by JPMIC in 1995 because of regulatory considerations imposed by the Small Business Investment Act.

19. Each subsequent Annual Investment Program will be comprised of a Subsequent Partnership and the SBIC Partnership. Each year a Subsequent Partnership will be organized to co-invest alongside JP Morgan Capital (other than JPMIC) in order to participate in investments in which JP Morgan Capital (other than JPMIC) invests its own funds during such year. The SBIC Partnership will offer interests to Eligible Employees and Qualified Participants which will represent the SBIC Partnership's participation in investments made by JPMIC during such year. It is anticipated that each Subsequent Partnership and the SBIC Partnership will enter into an investment agreement at the beginning of the year pursuant to which such Partnerships will agree to co-invest with JP Morgan Capital in investments made by JP Morgan Capital during that year. Each investment agreement will be approved by the Board of the General Partner with respect to such Partnership. The terms applicable to subsequent Annual Investment Programs may differ from the terms applicable to the 1995 Annual Investment Program, including, but not limited to, the investments in which such Subsequent Partnerships or the SBIC Partnership will participate, purchase prices paid for such investments, the interest rate paid on loans made by the Subsequent Partnerships to JPMCC, and investment limitations.

Applicant's Legal Analysis

1. Section 6(b) of the Act provides that the SEC shall exempt employees' securities companies from the provisions of the Act to the extent that such exemption is consistent with the protection of investors. Section 2(a)(13) of the Act defines an employees' security company, among other things, as any investment company all of the outstanding securities of which are beneficially owned by the employees or persons on retainer of a single employer or affiliated employers or by former employees of such employers; or by members of the immediate family of such employers, persons on retainer, or former employees.

2. Section 6(e) of the Act provides that in connection with any order exempting an investment company from any provision of section 7, certain specified provisions of the Act shall be applicable to such company, and to other persons in their transactions and relations with such company, as though such company were registered under the Act, if the SEC deems it necessary or appropriate in the public interest or for the protection of investors.

3. Applicants request an exemption under sections 6(b) and 6(e) of the Act from all provisions of the Act, and the rules and regulations thereunder, except section 9, sections 17 and 30 (except as described below), sections 36 through 53, and the rules and regulations thereunder.

4. Section 17(a) of the Act provides, in relevant part, that it is unlawful for any affiliated person of a registered investment company, or any affiliated person of such person, acting as principal, knowingly to sell any security or other property to such registered investment company or to purchase from such registered investment company any security or other property. Applicants request an exemption from section 17(a) of the Act to the extent necessary to: (a) permit an entity within the JP Morgan Group (including without limitation a Third Party Fund), acting as principal, to engage in any transaction directly or indirectly with any Partnership or any company controlled

by such Partnership; (b) permit any Partnership to invest in or engage in any transaction with any entity, acting as principal, (i) in which such Partnership, any company controlled by such Partnership, or any entity within the JP Morgan Group (including without limitation a Third Party Fund) has invested or will invest, or (ii) with which such Partnership, any company controlled by such Partnership, or any entity within the JP Morgan Group (including without limitation a Third Party Fund) is or will become otherwise affiliated; and (c) permit a Third Party Investor, acting as principal, to engage in any transaction directly or indirectly with a Partnership or any company controlled by the Partnership. The transactions to which any Partnership is a party will be effected only after a determination by the Board that the requirements of condition 1 below have been satisfied. In addition, these transactions will be effected only to the extent not prohibited by the applicable limited partnership agreement or other organizational documents of the Partnership.

5. The principal reason for the requested exemption is to ensure that each Partnership will be able to invest in companies, properties, or vehicles in which JP Morgan Capital, or its employees, officers, directors, or advisory directors may make or have already made an investment. The relief also is requested to permit each Partnership the flexibility to deal with its portfolio investments in the manner the General Partner deems most advantageous to all partners of or investors in such Partnership, or as required by JP Morgan Capital or the Partnership's other co-investors.

6. The partners of or investors in each Partnership will have been fully informed of the possible extent of such Partnership's dealings with JP Morgan Capital, and, as professionals employed in the banking and financial services business, will be able to understand and evaluate the attendant risks. Applicants believe that the community of interest among the partners of or other investors in each Partnership, on the one hand, and JP Morgan Capital, on the other hand, is the best insurance against any risk of abuse.

7. Applicants state that a Partnership will not make loans to JP Morgan Capital or any other entity within the JP Morgan Group, or to any employee, officer, director, or advisory director of any entity within the JP Morgan Group, with the exception of short-term loans and loans of funds held by the Partnership pending the making of Partnership investments, in each case, to an entity within the JP Morgan Group, which will bear interest at a rate then paid by such entity to unaffiliated third parties for loans on comparable terms, or short-term repurchase agreements or other fully secured loans to an entity within the JP Morgan Group. In addition, a Partnership will not sell or lease any property to JP Morgan Capital or any other entity within the JP Morgan Group, except on terms at least as favorable as those obtainable from unaffiliated third parties.

8. Section 17(d) of the Act makes it unlawful for any affiliated person of a registered investment company, acting as principal, to effect any transaction in which the company is a joint or joint and several participant with the affiliated person in contravention of such rules and regulations as the SEC may prescribe for the purpose of limiting or preventing participation by such companies. Rule 17d–1 under section 17(d) prohibits most joint transactions unless approved by order of the SEC. Applicants request an exemption from section 17(d) and rule 17d–1 thereunder to the extent necessary to permit affiliated persons of each Partnership or affiliated persons of any of these persons (including without limitation the Third Party Investors) to participate in, or effect any transaction in connection with, any joint enterprise or other joint arrangement or profit-sharing plan in which such Partnership or a company controlled by such Partnership is a participant. The exemption requested would permit, among other things, co-investments by each Partnership and individual partners or other investors or employees, officers, directors, or advisory directors of the JP Morgan Group making their own individual investment decisions apart from the JP Morgan Group.

9. Compliance with section 17(d) would prevent each Partnership from achieving its principal purpose. Because of the number and sophistication of the potential partners of or investors in a Partnership and persons affiliated with such partners or investors, strict compliance with section 17(d) would cause a Partnership to forego investment opportunities simply because a partner or investor or other affiliated person of the Partnership (or any affiliate of such a person) also had, or contemplated making, a similar investment. In addition, attractive investment opportunities of the types considered by a Partnership often require each participant in the transaction to make available funds in an amount that may be substantially greater than may be available to the Partnership alone. As a result, the only way in which a Partnership may be able to participate in such opportunities may be to co-invest with other persons, including its affiliates. The flexibility to structure co-investments and joint investments in the manner described above will not involve abuses of the type section 17(d) and rule 17d–1 were designed to prevent. The concern that permitting co-investments by JP Morgan Capital, on the one hand, and a Partnership on the other, might lead to less advantageous treatment of the Partnership, should be mitigated by the fact that: (a) The JP Morgan Group, in addition to its stake through JP Morgan Capital and as a general partner or manager in such Partnership, will be acutely concerned with its relationship with the personnel who invest in the Partnership; and (b) senior officers and directors of entities within the JP Morgan Group will be investing in such Partnerships.

10. Section 17(f) of the Act provides that the securities and similar investments of a registered management investment company must be placed in the custody of a bank, a member of a national securities exchange, or the company itself in accordance with SEC rules. Applicants request an exemption from section 17(f) and rule 17f–1 to the extent necessary to permit an entity within the JP Morgan Group to act as custodian without a written contract. Because there is such a close association between each Partnership and the JP Morgan Group, requiring a detailed written contract would expose the Partnership to unnecessary burden and expense. Furthermore, any securities of a Partnership held by the JP Morgan Group will have the protection of fidelity bonds. An exemption is requested from the terms of rule 17f–1(b)(4), as applicants do not believe the expense of retaining an independent accountant to conduct periodic verifications is warranted given the community of interest of all the parties involved and the existing requirement for an independent annual audit.

11. Section 17(g) of the Act and rule 17g–1 generally require the bonding of officers and employees of a registered investment company who have access to securities or funds of the company. Applicants request an exemption from section 17(g) and rule 17g–1 to the extent necessary to permit each Partnership to comply with rule 17g–1 without the necessity of having a majority of the members of the related Board who are not ''interested persons'' take such actions and make such approvals as are set forth in rule 17g–1. Because all the members of a related

Board will be affiliated persons, without the relief requested, a Partnership could not comply with rule 17g–1. Each Partnership will, except for the requirements of such approvals by ''not interested'' persons, otherwise comply with rule 17g–1.

12. Section 17(j) of the Act and rule 17j–1 make it unlawful for certain enumerated persons to engage in fraudulent, deceitful, or manipulative practices in connection with the purchase or sale of a security held or to be acquired by an investment company. Rule 17j–1 also requires every registered investment company, its adviser, and its principal underwriter to adopt a written code of ethics with provisions reasonably designed to prevent fraudulent activities, and to institute procedures to prevent violations of the code. Applicants request an exemption from section 17(j) and rule 17j–1 (except rule 17j–1(a)) because the requirements contained therein are burdensome and unnecessary in the context of the Partnerships. Requiring each Partnership to adopt a written code of ethics and requiring access persons to report each of their securities transactions would be time consuming and expensive, and would serve little purpose in light of, among other things, the community of interest among the partners of or investors in such Partnership by virtue of their common association in the JP Morgan Group and the substantial and largely overlapping protections afforded by the conditions with which applicants have agreed to comply. Accordingly, the requested exemption is consistent with the purposes of the Act, because the dangers against which section 17(j) and rule 17j–1 are intended to guard are not present in the case of any Partnership.

13. Sections 30(a), 30(b) and 30(d) of the Act, and the rules under those sections, generally require that registered investment companies prepare and file with the SEC and mail to their shareholders certain periodic reports and financial statements. The forms prescribed by the SEC for periodic reports have little relevance to a Partnership and would entail administrative and legal costs that outweigh any benefit to partners of or investors in the Partnerships. Exemptive relief is requested to the extent necessary to permit each Partnership to furnish annually to its partners or investors a copy of the report prepared by a nationally recognized firm of certified public accountants, which will include the Partnership's financial statements, within 90 days after the end of each fiscal year or as soon thereafter as practicable. An exemption also is requested from section 30(f) to the extent necessary to exempt the General Partner, the managing general partner or manager, if any, of such General Partner, members of the related Board, and any other persons who may be deemed members of an advisory board of such Partnership from filing reports under section 16 of the Exchange Act with respect to their ownership of interests in the Partnership.

14. Applicants believe that the exemptions requested are consistent with the protection of investors in view of the substantial community of interest among all the parties and the fact that each Partnership is an ''employees' securities company'' as defined in section 2(a)(13). Each Annual Investment Program will be conceived and organized by persons who may be investing, directly or indirectly, or may be eligible to invest, in such Partnership, and will not be promoted by persons outside the JP Morgan Group seeking to profit from fees for investment advice or from the distribution of securities. Applicants also believe that the terms of the proposed affiliated transactions will be reasonable and fair and free from overreaching.

Applicants' Conditions

Applicants agree that the order granting the requested relief shall be subject to the following conditions:

1. Each proposed transaction otherwise prohibited by section 17(a) or section 17(d) and rule 17d–1 to which a Partnership is a party (the ''Section 17 Transactions'') will be effected only if the Board, through the General Partner of such Partnership, determines that: (a) The terms of the transaction, including the consideration to be paid or received, are fair and reasonable to the partners of or investors in such Partnership and do not involve overreaching of such Partnership or its partners or investors on the part of any person concerned; and (b) the transaction is consistent with the interests of the partners of or investors in such Partnership, such Partnership's organizational documents and such Partnership's reports to its partners or investors. In addition, the General Partner of each Partnership will record and preserve a description of such affiliated transactions, the Board's findings, the information or materials upon which the Board's findings are based and the basis therefor. All records relating to an Annual Investment Program will be maintained until the termination of such Annual Investment Program and at least two years thereafter, and will be subject to examination by the SEC and its staff.[3]

2. In connection with the Section 17 Transactions, the Board, through the General Partner of each Partnership, will adopt, and periodically review and update, procedures designed to ensure that reasonable inquiry is made, prior to the consummation of any such transaction, with respect to the possible involvement in the transaction of any affiliated person or promoter of or principal underwriter for such Partnership, or any affiliated person of such a person, promoter, or principal underwriter.

3. The General Partner of each Partnership will not invest the funds of such Partnership in any investment in which a ''Co-Investor,'' as defined below, has acquired or proposes to acquire the same class of securities of the same issuer, where the investment involves a joint enterprise or other joint arrangement within the meaning of rule 17d–1 in which such Partnership and Co-Investor are participants, unless any such Co-Investor, prior to disposing of all or part of its investment, (a) gives such General Partner sufficient, but not less than one day's, notice of its intent to dispose of its investment; and (b) refrains from disposing of its investment unless such Partnership has the opportunity to dispose of the Partnership's investment prior to or concurrently with, and on the same terms us, and *pro rata* with the Co-Investor. The term ''Co-Investor,'' with respect to any Partnership, means any person who is: (a) An ''affiliated person'' (as such term is defined in the Act) of such Partnership (other than a Third Party Fund); (b) JP Morgan Capital; (c) an officer or director of JP Morgan Capital; or (d) a company in which the General Partner of such Partnership acts as a general partner or has a similar capacity to control the sale or other disposition of the company's securities. The restrictions contained in this condition, however, shall not be deemed to limit or prevent the disposition of an investment by a Co-Investor: (a) To its direct or indirect wholly-owned subsidiary, to any company (a ''parent'') of which such Co-Investor is a direct or indirect wholly-owned subsidiary, or to a direct or indirect wholly-owned subsidiary of its parent; (b) to immediate family members of such Co-Investor or a trust or other investment vehicle established for any such family member; (c) when

[3] Each Partnership will reserve the accounts, books and other documents required to be maintained in an easily accessible place for the first two years.

the investment is comprised of securities that are listed on any exchange registered as a national securities exchange under section 6 of the Exchange Act; (d) when the investment is comprised of securities that are national market system securities under section 11A(a)(2) of the Exchange Act and rule 11Aa2–1 thereunder; or (e) when the investment is comprised of securities that are listed on or traded on any foreign securities exchange or board of trade that satisfies regulatory requirements under the law of the jurisdiction in which such foreign securities exchange or board of trade is organized similar to those that apply to a national securities exchange or a national market system for securities.

4. Each Partnership and the General Partner or investment manager of such Partnership will maintain and preserve, for the life of such Partnership and at least two years thereafter, such accounts, books, and other documents as constitute the record forming the basis for the audited financial statements that are to be provided to the partners of or investors in such Partnership, and each annual report of such Partnership required to be sent to such partners or investors, and agree that all such records will be subject to examination by the SEC and its staff.[4]

5. The General Partner of each Partnership will send to each partner of or investor in such Partnership who had an interest in any capital account of such Partnership at any time during the fiscal year then ended Partnership financial statements audited by such Partnership's independent accountants. At the end of each fiscal year, the General partner will make a valuation or have a valuation made of all of the assets of the Partnership as of such fiscal year end in a manner consistent with customary practice with respect to the valuation of assets of the kind held by the Partnership. In addition, within 90 days after the end of each fiscal year of each Partnership or as soon as practicable thereafter, the General Partner of such Partnership will send a report to each person who was a partner or investor in such Partnership at any time during the fiscal year then ended, setting forth such tax information as shall be necessary for the preparation by the partner or investor of his or its federal and state income tax returns and a report of the investment activities of such Partnership during such year.

[4] Each Partnership will preserve the accounts, books and other documents required to be maintained in an easily accessible place for the first two years.

6. In any case where purchases or sales are made by a Partnership from or to an entity affiliated with such Partnership by reason of a 5% or more investment in such entity by a JP Morgan Group advisory director, director, officer or employee, such individual will not participate in such Partnership's determination of whether or not to effect such purchase or sale.

For the Commission, by the Division of Investment Management, under delegated authority.

Margaret H. McFarland,

Deputy Secretary.

[FR Doc. 95–27128 Filed 10–31–95; 8:45 am]

BILLING CODE 8010–01–M

SMALL BUSINESS ADMINISTRATION

Data Collection Available for Public Comments and Recommendations

ACTION: Notice and request for comments.

SUMMARY: In accordance with the Paperwork Reduction Act of 1995, this notice announces the Small Business Administration's intentions to request approval on a new information collection.

DATES: Comments should be submitted on or before January 2, 1996.

FOR FURTHER INFORMATION CONTACT: Jacqueline White, Management Analyst, Small Business Administration, 409 3rd Street, S.W., Suite 5000, Washington, D.C. 20416. Phone Number: 202–205–6629. Copies of this collection can also be obtained.

SUPPLEMENTARY INFORMATION:

Title: Characteristics of Franchise Business Ownership Survey.

Type of Request: New Information Collection.

Description of Respondents: Women and minority franchisers.

Burden Per Response: 20 minutes.

Annual Responses: 300.

Annual Burden: 600.

Comments: Send all comments regarding this information collection to Raymond Rawlinson, Office of Advocacy, 409 3rd Street, S.W., Suite 5800, Washington, D.C. 20416. Phone Number: 202–205–6976. Send comments regarding whether this information collection is necessary for the proper performance of the function of the agency, accuracy of burden estimate, in addition to ways to minimize this estimate, and ways to enhance the quality.

Jacqueline White,

Acting Chief, Administrative Information Branch.

[FR Doc. 95–26969 Filed 10–31–95; 8:45 am]

BILLING CODE 8025–01–P

Honolulu District Advisory Council Meeting

The U.S. Small Business Administration Honolulu District Advisory Council will hold a public meeting on Thursday, November 16, 1995 at 11:00 am at Bank of Hawaii, 130 Merchant Street, 6th Floor Board Room, Honolulu, HI 96813; to discuss matters as may be presented by members, staff of the U.S. Small Business Administration, or others present.

For further information, write or call Mr. Andrew K. Poepoe, District Director, U.S. Small Business Administration, 300 Ala Moana Boulevard, Room 2314, Honolulu, HI 96850 (808) 541–2965.

Dated: October 25, 1995.

Art DeCoursey,

Director, Office of Advisory Council.

[FR Doc. 95–27087 Filed 10–31–95; 8:45 am]

BILLING CODE 8025–01–P

SOCIAL SECURITY ADMINISTRATION

Prehearings Conducted by Adjudication Officers; Testing of New Procedures

AGENCY: Social Security Administration.

ACTION: Notice of the test sites and the duration of tests involving prehearing procedures and decisions by Adjudication Officers.

SUMMARY: The Social Security Administration is announcing the locations and the duration of tests it will conduct under the final rules published in the Federal Register on September 13, 1995 (60 FR 47469). These final rules authorize the testing of procedures to be conducted by an adjudication officer, who, under the Plan for a New Disability Claim Process published in the Federal Register on September 19, 1994 (59 FR 47887), would be the focal point for all prehearing activities. Under the final rules, when a request for a hearing before an administrative law judge is requested, the adjudication officer will conduct prehearing procedures and, if appropriate, issue a decision wholly favorable to the claimant.

FOR FURTHER INFORMATION CONTACT: Richard Fussell, Appeals Team Leader,

Disability Process Redesign Team, Social Security Administration, 6401 Security Boulevard, Baltimore, Maryland 21235, 410–965–9230.

SUPPLEMENTARY INFORMATION: The tests we will conduct using an adjudication officer will begin on or about November 1, 1995 and last for approximately twelve months. We will publish another notice in the Federal Register if we extend the duration of the tests or expand the number of test sites. The tests discussed in this notice will be conducted at the following nine State Agencies:

Massachusetts Rehabilitation Commission, 103 South Main St., Boston, MA 02111
Department of Social Services, Office of Disability Determinations, 1 Commerce Plaza, Albany, NY 12260
Department of Human Resources, Disability Adjudication Section, 330 Ponce de Leon Avenue, Atlanta, GA 30001
Social Security Disability Determination Services, Seventh and Roberts Sts., St. Paul, MN 55101
Department of Social Services Disability Determination Services, 608 W. Allegen St., Detroit, MI 48933
Department of Health and Social Services, Division of Vocational Rehabilitation Disability Determination Bureau, 722 Williamson St., Madison, WI 53703
Disability Determination Service, 2530–I S. Campbell St., Springfield, MO 65807
Disability Determinations, 721 Government St., New Orleans, LA 70802
Disability Determination Services, PO Box 9303 Airdustrial Way SW, Tumwater, Wa. 98501

The sites selected present a mix of geographic areas and case loads. We expect that the tests will provide us with sufficient information to determine the effect of the Adjudication Officer position on the administrative review process.

Not all hearing requests received in the test sites listed above will be handled under the test procedures. However, if a request for a hearing is selected to be handled by an adjudication officer as part of the test, the claim will be processed under the procedures established under the final regulations cited above. These tests will be conducted alone; they will not be conducted in combination with one or more of the tests we plan to conduct pursuant to the final rules ''Testing Modifications to the Disability Determination Procedures'' published in the Federal Register on April 24, 1995 (60 FR 20023). Howevever, when SSA tests the Adjudication Officer in combination with other provisions of the ''Testing Modifications to the Disability Determination Procedures,'' we will publish the locations and dates in the Federal Register.

Dated: October 26, 1995.

Charles A. Jones,

Director, Disability Process Redesign Team.

[FR Doc. 95–27041 Filed 10–31–95; 8:45 am]

BILLING CODE 4190–29–P

DEPARTMENT OF TRANSPORTATION

Federal Aviation Administration

Approval of Noise Compatibility Program for Saipan International Airport

AGENCY: Federal Aviation Administration, DOT.

ACTION: Notice.

SUMMARY: The Federal Aviation Administration (FAA) announces its findings on the Noise Compatibility Program submitted by the Commonwealth Ports Authority under the provisions of Title I of the Aviation Safety and Noise Abatement Act of 1979 (Public Law 96–193) and 14 CFR Part 150. These findings are made in recognition of the description of Federal and nonfederal responsibilities in Senate Report No. 96–52 (1980). On February 14, 1994 the FAA determined that the Noise Exposure Maps submitted by the Commonwealth Ports Authority under Part 150 were in compliance with applicable requirements. On September 25, 1995, the Deputy Associate Administrator for Airports approved the Saipan International Airport, Obyan, Northern Mariana Islands, Noise Compatibility Program. Ten of the eleven recommendations of the program were approved and one had no action.

EFFECTIVE DATE: The effective date of the FAA's approval of the Saipan International Airport Noise Compatibility Program is September 25, 1995.

FOR FURTHER INFORMATION CONTACT: David J. Welhouse, Airport Planner, Honolulu Airports District Office, Federal Aviation Administration, P.O. Box 50244, Honolulu, Hawaii 96850, Telephone: (808) 541–1243. Street Address: 300 Ala Moana Blvd, Room 7116. Documents reflecting this FAA action may be reviewed at the same location.

SUPPLEMENTARY INFORMATION: This notice announces that the FAA has given its overall approval to the Noise Compatibility Program for the Saipan International Airport, effective September 25, 1995.

Under Section 104(a) of the Aviation Safety and Noise Abatement Act of 1979 (hereinafter referred to as ''the Act''), an airport operator who has previously submitted a Noise Exposure Map may submit to the FAA a Noise Compatibility Program which sets forth the measures taken or proposed by the airport operator for the reduction of existing noncompatible land uses aNd prevention of additional noncompatible land uses within the area covered by the Noise Exposure Maps. The Act requires such programs to be developed in consultation with interested and affected parties including local communities, government agencies, airport users, and FAA personnel.

Each airport Noise Compatibility Program developed in accordance with Federal Aviation Regulations (FAR) Part 150 is a local program, not a Federal program. The FAA does not substitute its judgment for that of the airport proprietor with respect to which measures should be recommended for action. The FAA's approval or disapproval of FAR Part 150 program recommendations is measured according to the standards expressed in Part 150 and the Act and is limited to the following determinations:

a. The Noise Compatibility Program was developed in accordance with the provisions and procedures of FAR Part 150;

b. Program measures are reasonably consistent with achieving the goals of reducing existing noncompatible land uses around the airport and preventing the introduction of additional noncompatible land uses;

c. Program measures would not create an undue burden on interstate or foreign commerce, unjustly discriminate against types or classes of aeronautical uses, violate the terms of airport grant agreements, or intrude into areas preempted by the Federal Government; and

d. Program measures relating to the use of flight procedures can be implemented within the period covered by the program without derogating safety, adversely affecting the efficient use and management of the navigable airspace and air traffic control systems, or adversely affecting other powers and responsibilities of the Administrator prescribed by law.

Specific limitations with respect to FAA's approval of an airport Noise Compatibility Program are delineated in FAR Part 150, section 150.5. Approval is not a determination concerning the acceptability of land uses under Federal, state, or local law. Approval does not by itself constitute an FAA implementing action. A request for Federal action or approval to implement specific noise compatibility measures may be required, and an FAA decision on the request may require an environmental

assessment of the proposed action. Approval does not constitute a commitment by the FAA to financially assist in the implementation of the program nor a determination that all measures covered by the program are eligible for grant-in-aid funding from the FAA. Where federal funding is sought, requests for project grants must be submitted to the FAA Airports District Office in Honolulu, Hawaii.

The Commonwealth Ports Authority submitted to the FAA on November 15, 1993, the Noise Exposure Maps, descriptions, and other documentation produced during the noise compatibility planning study conducted from August 1993 through August 1994. The Saipan International Airport Noise Exposure Maps were determined by FAA to be in compliance with applicable requirements on February 14, 1994. Notice of this determination was published in the Federal Register on February 28, 1994.

The Saipan International Airport study contains a proposed Noise Compatibility Program comprised of actions designed for phased implementation by airport management and adjacent jurisdictions from the date of study completion to the year 1999. It was requested that the FAA evaluate and approve this material as a Noise Compatibility Program as described in Section 104(b) of the Act. The FAA began its review of the program on March 29, 1995 and was required by a provision of the Act to approve or disapprove the program within 180 days (other than the use of new flight procedures for noise control). Failure to approve or disapprove such program within the 180-day period shall be deemed to be an approval of such program.

The submitted program contained eleven (11) proposed actions for noise mitigation on and off the airport. The FAA completed its review and determined that the procedural and substantive requirements of the Act and FAR Part 150 have been satisfied. The overall program, therefore, was approved by the Administrator effective September 25, 1995.

Outright approval was granted for ten (10) of the eleven (11) of the specific program elements. Approval program measures include: Early power cutbacks in accordance with Advisory Circular 91–53A (approved as a voluntary measure only); Study possible land exchanges for private lands; Provide sound attenuation for impacted residences; Monitor development proposals in the Saipan International Airport environs; Monitor aircraft noise levels and operations at Saipan International Airport and conduct annual public information meetings on the progress of the Part 150 program; and Disclose airport noise impacts for all real estate transfers. No action was taken on the measure to implement an informal runway use program.

These determinations are set forth in detail in a Record of Approval endorsed by the Administrator on September 25, 1995. The Record of Approval, as well as other evaluation materials and the documents comprising the submittal, are available for review in the FAA office listed above and at the administrative offices of the Commonwealth Ports Authority.

Issued in Hawthorne, California on October 16, 1995.

Robert C. Bloom,

Acting Manager, Airports Division.

[FR Doc. 95–26989 Filed 10–31–95; 8:45 am]

BILLING CODE 4910–13–M

[Summary Notice No. PE–95–39]

Petitions for Exemption; Summary of Petitions Received; Dispositions of Petitions Issued

AGENCY: Federal Aviation Administration (FAA), DOT.

ACTION: Notice of petitions for exemption received and of dispositions of prior petitions.

SUMMARY: Pursuant to FAA's rulemaking provisions governing the application, processing, and disposition of petitions for exemption (14 CFR Part 11), this notice contains a summary of certain petitions seeking relief from specified requirements of the Federal Aviation Regulations (14 CFR Chapter I), dispositions of certain petitions previously received, and corrections. The purpose of this notice is to improve the public's awareness of, and participation in, this aspect of FAA's regulatory activities. Neither publication of this notice nor the inclusion or omission of information in the summary is intended to affect the legal status of any petition or its final disposition.

DATES: Comments on petitions received must identify the petition docket number involved and must be received on or before November 28, 1995.

ADDRESSES: Send comments on any petition in triplicate to: Federal Aviation Administration, Office of the Chief Counsel, Attn: Rule Docket (AGC–200, Petition Docket No. _____, 800 Independence Avenue, SW., Washington, D.C. 20591.

Comments may also be sent electronically to the following internet address: nprmcmts@mail.hq.faa.gov.

The petition, any comments received, and a copy of any final disposition are filed in the assigned regulatory docket and are available for examination in the Rules Docket (AGC–200), Room 915G, FAA Headquarters Building (FOB 10A), 800 Independence Avenue, SW., Washington, D.C. 20591; telephone (202) 267–3132.

FOR FURTHER INFORMATION CONTACT: Mr. D. Michael Smith, Office of Rulemaking (ARM–1), Federal Aviation Administration, 800 Independence Avenue, SW., Washington, DC 20591; telephone (202) 267–7470.

This notice is published pursuant to paragraphs (c), (e), and (g) of § 11.27 of Part 11 of the Federal Aviation Regulations (14 CFR Part 11).

Donald P. Byrne,

Assistant Chief Counsel for Regulations.

Petitions for Exemption

Docket No.: 21780
Petitioner: Civil Air Patrol
Sections of the FAR Affected: 14 CFR 61.118
Description of Relief Sought: To extend and amend Exemption No. 4042, as amended, which permits members of the CAP who are private pilots to be reimbursed for fuel, oil, and maintenance costs that are directly related to the performance of official search and rescue missions. The amendment, if granted, would permit private pilots to be reimbursed not only for fuel, oil, and maintenance costs but also, in some cases, for per diem costs while serving on all official CAP missions.

Docket No.: 28342
Petitioner: Mr. Lewis H. Richards
Sections of the FAR Affected: 14 CFR 121.383(c)
Description of Relief Sought: To permit Mr. Richards to act as a pilot in operations conducted under part 121 after reaching his 60th birthday.

Dispositions of Petitions

Docket No.: 26821
Petitioner: MCI Telecommunications
Sections of the FAR Affected: 14 CFR 61.57
Description of Relief Sought/ Disposition: To extend Exemption No. 5742, as amended, which permits certain pilots employed by MCI to increase the interval between recency of flight experiences specified by § 61.57 and to accomplish some recency of night experiences in Level C or D simulators.

Grant, October 6, 1995, Exemption No. 5742C

Docket No.: 28052
Petitioner: Mr. Frank J. Arianna

Sections of the FAR Affected: 14 CFR 91.215

Description of Relief Sought/ Disposition: To allow Mr. Arianna to operate his Piper Colt, model PA–22–108, which is equipped with an enginer-driven electrical system, under the Class B airspace area surrounding Greater Pittsburgh International airport, without a transponder and automatic (Mode C) reporting equipment.

Denial, October 2, 1995, Exemption No. 6177

Docket No.: 28260

Petitioner: Emery Worldwide Airlines

Sections of the FAR Affected: 14 CFR 121.503, 121.505, and 121.511

Description of Relief Sought/ Disposition: To permit Emery Worldwide Airlines (EWA) to comply with the flight and duty time limitations contained in § 121.471, which apply to domestic air carriers, even though EWA is a supplemental air carrier.

Grant, October 6, 1995, Exemption No. 6184

Docket No.: 28294

Petitioner: Cessna Aircraft Company

Sections of the FAR Affected: 14 CFR 25.571(e)(1)

Description of Relief Sought/ Disposition: To allow the Cessna Aircraft Company exemption from the 4-pound bird strike requirement of § 25.571(e)(1) from Vc at sea level to 8,000 feet in favor of Vc at sea level or 0.85 Vc at 8,000 feet, whichever is greater.

Grant, October 5, 1995, Exemption No. 6179

Docket No.: 28310

Petitioner: Waypoint Aeronautical Corporation

Sections of the FAR Affected: 14 CFR 61.55(b)(2); 61.56(c)(1); 61.57 (c) and (d); 61.58 (c)(1) and (d); 61.63 (c)(2) and (d)(2) and (3); 61.65(c), (e)(2) and (3), and (g); 61.67(d)(2); 61.57 (d)(1) and (2) and (e) (1) and (2); 61.191(c); and appendix A, part 61

Description of Relief Sought/ Disposition: To permit Waypoint Aeronautical Corporation to use FAA-approved simulators to meet certain flight experience requirements of part 61.

Grant, September 11, 1995, Exemption No. 6155

Docket No.: 28352

Petitioner: Boeing Commercial Airplane Group

Sections of the FAR Affected: 14 CFR 25.812

Description of Relief Sought/ Disposition: To allow exemption from the illumination requirements of § 25.812(g)(1) for the escape means required by Exemption No. 5993A at the entry door on the Model 767–300F freighter airplane, to allow the carriage of supernumery occupants.

Partial Grant, October 12, 1995, Exemption No. 6186

[FR Doc. 95–26990 Filed 10–31–95; 8:45 am]

BILLING CODE 4910–13–M

Executive Committee of the Aviation Rulemaking Advisory Committee; Meeting

AGENCY: Federal Aviation Administration (FAA), DOT.

ACTION: Notice of meeting.

SUMMARY: The FAA is issuing this notice to advise the public of a meeting of the Executive Committee of the Federal Aviation Administration Aviation Rulemaking Advisory Committee.

DATES: The meeting will be held on November 15, 1995, at 10 a.m. Arrange for oral presentations by November 6, 1995.

ADDRESS: The meeting will be held at the Aerospace Industries Association of America, 1250 Eye Street, NW., Wright Room, Washington, DC.

FOR FURTHER INFORMATION CONTACT: Miss Jean Casciano, Federal Aviation Administration (ARM–25), 800 Independence Avenue, SW., Washington, DC 20591, telephone (202) 267–9683; fax (202) 267–5075.

SUPPLEMENTARY INFORMATION: Pursuant to section 10(a)(2) of the Federal Advisory Committee Act (Pub. L. 92–463; 5 U.S.C. App. II), notice is hereby given of a meeting of the Executive Committee to be held on November 15, 1995, at the Aerospace Industries Association of America, 1250 Eye Street, NW., Washington, DC, 10 a.m. The agenda will include:

- Approval of the work plan of the Digital Information Working Group
- Approval of the proposed recommendation developed by the Flight Data Recorder Working Group
- Notable comments on specific issues
- Other business

Copies of the proposed recommendation will be available to interested persons prior to the meeting. A copy may be obtained by contacting the person listed under the heading **FOR FURTHER INFORMATION CONTACT**.

Attendance is open to the interested public but will be limited to the space available. The public must make arrangements by November 6, 1995, to present oral statements at the meeting. The public may present written statements to the executive committee at any time by providing 25 copies to the Executive Director, or by bringing the copies to him at the meeting. In addition, sign and oral interpretation can be made available at the meeting, as well as an assistive listening device, if requested 10 calendar days before the meeting. Arrangements may be made by contacting the person listed under the heading **FOR FURTHER INFORMATION CONTACT**.

Issued in Washington, DC, on October 25, 1995.

Chris A. Christie,

Executive Director, Aviation Rulemaking Advisory Committee.

[FR Doc. 95–26987 Filed 10–31–95; 8:45 am]

BILLING CODE 4910–13–M

National Highway Traffic Safety Administration

National Award for the Advancement of Motor Vehicle Research and Development

AGENCY: National Highway Traffic Safety Administration, DOT.

ACTION: Announcement of award; request for nominations.

SUMMARY: This notice announces the National Award for the Advancement of Motor Vehicle Research and Development, describes its background and basis, and solicits nominations for the award. It also identifies the required content for nominations and describes the evaluation process and criteria to be used in making selections.

DATES: Nominations must be received not later than December 15, 1995.

ADDRESSES: Send complete nominations with supporting information to William A. Boehly, Associate Administrator for Research and Development, NRD–01, National Highway Traffic Safety Administration, 400 Seventh St. SW, Washington, DC 20590. For further information, contact Louis J. Brown, Jr., Special Assistant for Technology Transfer Policy and Programs, NRD–01, National Highway Traffic Safety Administration, Washington, DC 20590, phone: 202–366–5199, fax: 202-366–5930.

SUPPLEMENTARY INFORMATION: The Intermodal Surface Transportation Efficiency Act (ISTEA) of 1991 established a National Award for the Advancement of Motor Vehicle Research and Development. It set the basis for the award as follows:

The Secretary of Transportation shall periodically make and present the award to

domestic motor vehicle manufacturers, suppliers, or Federal laboratory personnel who, in the opinion of the Secretary of Transportation have substantially improved domestic motor vehicle research and development in safety, energy savings, or environmental impact. No person may receive the award more than once every 5 years. (15 USC 3711c.)

This announcement is to solicit nominations for the National Award for the Advancement of Motor Vehicle Research and Development and to provide relevant information. It is the third year of competition for the award; the second competition having closed on December 16, 1994 after having been announced by Federal Register notice (59 FR 54489, Monday, October 31, 1994). The award consists of a medal and citation from the Secretary of Transportation. It will be presented at an appropriate ceremony.

Nominators: Any person may nominate individuals or organizations he or she believes are worthy of receiving the award by reason of accomplishments.

Eligibility: Eligibility for the National Award for the Advancement of Motor Vehicle Research and Development is limited to domestic motor vehicle manufacturers, domestic suppliers to the motor vehicle industry, their employees,and personnel of Federal laboratories. See the *Definitions* section below for the definitions of the following terms: Domestic motor vehicle manufacturer, Domestic supplier, and Federal laboratory.

Qualifying Work: The award will recognize work that has substantially improved domestic motor vehicle research and development in the areas of motor vehicle safety, motor vehicle energy savings, or environmental impacts of motor vehicles. The work may be a singular one time accomplishment or it may be a series of accomplishments that have had substantial effect over time. Examples of the types of achievements that fall into the three categories are:

1. Safety Improvment—Vehicular technology that reduces the likelihood of crashes (crash avoidance) or the likelihood of serious injury when a crash occurs (crashworthiness) or otherwise improves the chances of post-crash survival/recovery of crash victims. This could include research and development of instrumentation or biomechanics.

2. Energy Savings—Technology that saves energy in the production or operation of motor vehicles my such means as light weight structures, engine and drive train improvements, reductions in tire rolling resistance or aerodynamic drag, and modifications of fuel characteristics.

3. Improvements in Environmental Quality—Motor vehicle technology that reduces emissions, reduces solid waste, reduces hazardous waste, reduces noise (e.g. tire noise), was well as technology that reduces waste byproducts or motor vehicle production, operation, or scrappage.

Required Contents of Nomination

- Names and identification of specific individuals or organizations being nominated.
- Identification of nominator(s) with title(s), address(es) and phone number(s). At least one nominator must sign the nomination.
- Description of accomplishments, including the nature of the specific research and development accomplishment and reasons why it constitutes substantial improvement. Identify involvement of organization or individual(s) nominated.
- References for improvements (patents, awards, papers, other recognition).
- Establish eligibility of nominees. Individuals must be past or current employees of organization at which research and development was accomplished.
- Establish that improved technology is for motor vehicles offered for sale in the United States.

Limitation on length of nomination: The nomination is limited to 10 numbered pages of 8.5 inch × 11.0 inch paper with one inch margins and font size not less than 12 point.

Send an original and three copies of the complete nomination to William A. Boehly, Associate Administrator for Research and Development, NRD–01, National Highway Traffic Safety Administration, 400 Seventh St. SW, Washington, DC 20590. Nomination will be returned to the nominator if it includes a written request.

Evaluation process and criteria: NHTSA and other Federal agency staff will make an initial screening of all nominations received on or before December 15, 1995 to ensure that they contain the required information and meet the statutory requirements for eligibility and field of work. Subsequently, a special panel will evaluate the nominations. NHTSA intends that the evaluation panel will include experts in the fields of energy savings and environmental impact in addition to motor vehicle safety. The panel will make its evaluations according to the following criteria:

1. Quality of cited work.

2 Contribution of cited work to improved safety, energy savings or environmental quality.

3. Involvement of nominees with cited work.

The Secretary of Transportation will then select the awardee from among the nominees receiving high evaluations from the evaluation panel. The Secretary may also decide not to make an award. His decision is final.

Definitions

For the purposes of determining eligibility for the National Award for the Advancement of Motor Vehicle Research and Development, the following definitions will apply:

Domestic motor vehicle manufacturer—a company engaged in the production and sale of motor vehicles in the United States and that has majority ownership or control by individuals who are citizens of the United States. [Definition based on that of ''United States-owned company'' in Section 15 U.S.C. 278n(j)(2) as added by Public Law 102–245.]

Domestic supplier—a company that supplies research and development, design services, materials, parts and/or items of equipment or machinery to a motor vehicle manufacturer or subcontractor to a motor vehicle manufacturer or whose produces are used in new motor vehicles and that has majority ownership or control by individuals who are citizens of the United States.

Personnel of Federal laboratory—Individuals employed by the Federal Government at a facility engaging in research and development activities or employed by a contractor at such a facility that is owned by the Federal Government and operated by that contractor.

Ricardo Martinez,

Administrator.

[FR Doc. 95–27103 Filed 10–31–95; 8:45 am]

BILLING CODE 4910–59–M

DEPARTMENT OF THE TREASURY

Office of Thrift Supervision

[AC–51; OTS No. 0714]

Home Federal Savings and Loan Association, Charlotte, North Carolina; Approval of Conversion Application

Notice is hereby given that on October 24, 1995, the Director, Corporate Activities, Office of Thrift Supervision, or her designee, acting pursuant to delegated authority, approved the application of Home Federal Savings

and Loan Association, Charlotte, North Carolina, to convert to the stock form of organization. Copies of the application are available for inspection at the Dissemination Branch, Office of Thrift Supervision, 1700 G Street, N.W., Washington, D.C. 20552, and the Southeast Regional Office, Office of Thrift Supervision, 1475 Peachtree Street, N.E., Atlanta, Georgia 30309.

Dated: October 26, 1995.

By the Office of Thrift Supervision.

Nadine Y. Washington,

Corporate Secretary.

[FR Doc. 95–26995 Filed 10–31–95; 8:45 am]

BILLING CODE 6720–01–M

Sunshine Act Meetings

Federal Register

Vol. 60, No. 211

Wednesday, November 1, 1995

This section of the FEDERAL REGISTER contains notices of meetings published under the ''Government in the Sunshine Act'' (Pub. L. 94-409) 5 U.S.C. 552b(e)(3).

BOARD OF GOVERNORS OF THE FEDERAL RESERVE SYSTEM

TIME AND DATE: 11:00 a.m., Monday, November 6, 1995.

PLACE: Marriner S. Eccles Federal Reserve Board Building, C Street entrance between 20th and 21st Streets, N.W., Washington, D.C. 20551.

STATUS: Closed.

MATTERS TO BE CONSIDERED:

1. Issues involving Federal Reserve Board employment policies.
2. Federal Reserve Bank and Branch director appointments.
3. Personnel actions (appointments, promotions, assignments, reassignments, and salary actions) involving individual Federal Reserve System employees.
4. Any items carried forward from a previously announced meeting.

CONTACT PERSON FOR MORE INFORMATION: Mr. Joseph R. Coyne, Assistant to the Board; (202) 452–3204. You may call (202) 452–3207, beginning at approximately 5 p.m. two business days before this meeting, for a recorded announcement of bank and bank holding company applications scheduled for the meeting.

Dated: October 27, 1995.

Jennifer J. Johnson,

Deputy Secretary of the Board.

[FR Doc. 95–27165 Filed 10–30–95; 11:40 am]

BILLING CODE 6210–01–P

Corrections

Federal Register
Vol. 60, No. 211
Wednesday, November 1, 1995

This section of the FEDERAL REGISTER contains editorial corrections of previously published Presidential, Rule, Proposed Rule, and Notice documents. These corrections are prepared by the Office of the Federal Register. Agency prepared corrections are issued as signed documents and appear in the appropriate document categories elsewhere in the issue.

DEPARTMENT OF THE INTERIOR

Office of Surface Mining Reclamation and Enforcement

30 CFR Part 914

[SPATS No. IN-126-FOR; State Program Amendment No. 95-9]

Indiana Regulatory Program

Correction

In rule document 95–25555 beginning on page 53511, in the issue of Monday, October 16, 1995, make the following corrections:

1.On page 53513, in the 1st column, under the heading entitled ''*Environmental Protection Agency (EPA)*'', in the 2nd paragraph, in the 11th line,'' 'drainage'' should read '' ''draining''.

2.On the same page, in the second column, under the heading entitled ''*National Environmental Policy Act*'', in the eighth line, ''102(20(C)'' should read ''102(2)(C)''.

§914.15 [Corrected]

3.On the same page, in the third column, in §914.15 (111), in the sixth line, ''310 IAC 12-0.5-15---'' should read ''310 IAC 12-0.5-14---''.

BILLING CODE 1505–01–D

DEPARTMENT OF TRANSPORTATION

Federal Aviation Administration

14 CFR Part 71

[Airspace Docket No. 95-AGL-10]

Establishment of Class E Airspace; Pinecreek, MN

Correction

In rule document 95–25848 beginning on page 53870 in the issue of Wednesday, October 18, 1995, make the following correction:

§ 71.1 [Corrected]

On page 53871, in the second column, in § 71.1, *Paragraph 6005*, under AGL MN E5 Pinecreek, MN [New], the first line should read ''(Lat. 48°59′54″N, long. 95°58′45″W)

BILLING CODE 1505–01–D

Reader Aids

Federal Register

Vol. 60, No. 211

Wednesday, November 1, 1995

INFORMATION AND ASSISTANCE

Federal Register

Index, finding aids & general information	**202–523–5227**
Public inspection announcement line	**523–5215**
Corrections to published documents	**523–5237**
Document drafting information	**523–3187**
Machine readable documents	**523–4534**

Code of Federal Regulations

Index, finding aids & general information	**523–5227**
Printing schedules	**523–3419**

Laws

Public Laws Update Service (numbers, dates, etc.)	**523–6641**
Additional information	**523–5230**

Presidential Documents

Executive orders and proclamations	**523–5230**
Public Papers of the Presidents	**523–5230**
Weekly Compilation of Presidential Documents	**523–5230**

The United States Government Manual

General information	**523–5230**

Other Services

Data base and machine readable specifications	**523–4534**
Guide to Record Retention Requirements	**523–3187**
Legal staff	**523–4534**
Privacy Act Compilation	**523–3187**
Public Laws Update Service (PLUS)	**523–6641**
TDD for the hearing impaired	**523–5229**

ELECTRONIC BULLETIN BOARD

Free Electronic Bulletin Board service for Public Law numbers, Federal Register finding aids, and list of documents on public inspection. **202–275–0920**

FAX-ON-DEMAND

You may access our Fax-On-Demand service. You only need a fax machine and there is no charge for the service except for long distance telephone charges the user may incur. The list of documents on public inspection and the daily Federal Register's table of contents are available using this service. The document numbers are 7050-Public Inspection list and 7051-Table of Contents list. The public inspection list will be updated immediately for documents filed on an emergency basis.

NOTE: YOU WILL ONLY GET A LISTING OF DOCUMENTS ON FILE AND NOT THE ACTUAL DOCUMENT. Documents on public inspection may be viewed and copied in our office located at 800 North Capitol Street, N.W., Suite 700. The Fax-On-Demand telephone number is: **301–713–6905**

FEDERAL REGISTER PAGES AND DATES, NOVEMBER

55423–55650..... 1

CFR PARTS AFFECTED DURING NOVEMBER

At the end of each month, the Office of the Federal Register publishes separately a List of CFR Sections Affected (LSA), which lists parts and sections affected by documents published since the revision date of each title.

LIST OF PUBLIC LAWS

This is a continuing list of public bills from the current session of Congress which have become Federal laws. It may be used in conjunction with "P L U S" (Public Laws Update Service) on 202–523–6641. The text of laws is not published in the **Federal Register** but may be ordered in individual pamphlet form (referred to as "slip laws") from the Superintendent of Documents, U.S. Government Printing Office, Washington, DC 20402 (phone, 202–512–2470).

S. 1254/P.L. 104–38

To disapprove of amendments to the Federal Sentencing Guidelines relating to lowering of crack sentences and sentences for money laundering and transactions in property derived from unlawful activity. (Oct. 30, 1995; 109 Stat. 334)

Last List October 25, 1995

TABLE OF EFFECTIVE DATES AND TIME PERIODS—NOVEMBER 1995

This table is used by the Office of the Federal Register to compute certain dates, such as effective dates and comment deadlines, which appear in agency documents. In computing these dates, the day after publication is counted as the first day.

When a date falls on a weekend or holiday, the next Federal business day is used. (See 1 CFR 18.17)

A new table will be published in the first issue of each month.

DATE OF FR PUBLICATION	15 DAYS AFTER PUBLICATION	30 DAYS AFTER PUBLICATION	45 DAYS AFTER PUBLICATION	60 DAYS AFTER PUBLICATION	90 DAYS AFTER PUBLICATION
November 1	November 16	December 1	December 18	January 2	January 30
November 2	November 17	December 4	December 18	January 2	January 31
November 3	November 20	December 4	December 18	January 2	February 1
November 6	November 21	December 6	December 21	January 5	February 5
November 7	November 22	December 7	December 22	January 8	February 5
November 8	November 24	December 8	December 26	January 8	February 6
November 9	November 24	December 11	December 26	January 8	February 7
November 13	November 28	December 13	December 28	January 12	February 12
November 14	November 29	December 14	December 29	January 16	February 12
November 15	November 30	December 15	January 2	January 16	February 13
November 16	December 1	December 18	January 2	January 16	February 14
November 17	December 4	December 18	January 2	January 16	February 15
November 20	December 5	December 20	January 4	January 19	February 20
November 21	December 6	December 21	January 5	January 22	February 20
November 22	December 7	December 22	January 8	January 22	February 20
November 24	December 11	December 26	January 8	January 23	February 22
November 27	December 12	December 27	January 11	January 26	February 26
November 28	December 13	December 28	January 12	January 29	February 26
November 29	December 14	December 29	January 16	January 29	February 27
November 30	December 15	January 2	January 16	January 29	February 28