2–14–96
Vol. 61 No. 31
Pages 5669–5920

federal register

Wednesday
February 14, 1996

Briefings on How To Use the Federal Register
For information on briefing in Washington, DC, see announcement on the inside cover of this issue.

FEDERAL REGISTER Published daily, Monday through Friday, (not published on Saturdays, Sundays, or on official holidays), by the Office of the Federal Register, National Archives and Records Administration, Washington, DC 20408, under the Federal Register Act (49 Stat. 500, as amended; 44 U.S.C. Ch. 15) and the regulations of the Administrative Committee of the Federal Register (1 CFR Ch. I). Distribution is made only by the Superintendent of Documents, U.S. Government Printing Office, Washington, DC 20402.

The Federal Register provides a uniform system for making available to the public regulations and legal notices issued by Federal agencies. These include Presidential proclamations and Executive Orders and Federal agency documents having general applicability and legal effect, documents required to be published by act of Congress and other Federal agency documents of public interest. Documents are on file for public inspection in the Office of the Federal Register the day before they are published, unless earlier filing is requested by the issuing agency.

The seal of the National Archives and Records Administration authenticates this issue of the Federal Register as the official serial publication established under the Federal Register Act. 44 U.S.C. 1507 provides that the contents of the Federal Register shall be judicially noticed.

The Federal Register is published in paper, 24x microfiche and as an online database through *GPO Access*, a service of the U.S. Government Printing Office. The online database is updated by 6 a.m. each day the Federal Register is published. The database includes both text and graphics from Volume 59, Number 1 (January 2, 1994) forward. Free public access is available on a Wide Area Information Server (WAIS) through the Internet and via asynchronous dial-in. Internet users can access the database by using the World Wide Web; the Superintendent of Documents home page address is http://www.access.gpo.gov/su__docs/, by using local WAIS client software, or by telnet to swais.access.gpo.gov, then login as guest, (no password required). Dial-in users should use communications software and modem to call (202) 512–1661; type swais, then login as guest (no password required). For general information about *GPO Access*, contact the *GPO Access* User Support Team by sending Internet e-mail to help@eids05.eids gpo.gov; by faxing to (202) 512–1262; or by calling (202) 512–1530 between 7 a.m. and 5 p.m. Eastern time, Monday–Friday, except for Federal holidays.

The annual subscription price for the Federal Register paper edition is $494, or $544 for a combined Federal Register, Federal Register Index and List of CFR Sections Affected (LSA) subscription; the microfiche edition of the Federal Register including the Federal Register Index and LSA is $433. Six month subscriptions are available for one-half the annual rate. The charge for individual copies in paper form is $8.00 for each issue, or $8.00 for each group of pages as actually bound; or $1.50 for each issue in microfiche form. All prices include regular domestic postage and handling. International customers please add 25% for foreign handling. Remit check or money order, made payable to the Superintendent of Documents, or charge to your GPO Deposit Account, VISA or MasterCard. Mail to: New Orders, Superintendent of Documents, P.O. Box 371954, Pittsburgh, PA 15250–7954.

There are no restrictions on the republication of material appearing in the Federal Register.

How To Cite This Publication: Use the volume number and the page number. Example: 61 FR 12345.

SUBSCRIPTIONS AND COPIES

PUBLIC	
Subscriptions:	
Paper or fiche	202–512–1800
Assistance with public subscriptions	512–1806
General online information	202–512–1530
Single copies/back copies:	
Paper or fiche	512–1800
Assistance with public single copies	512–1803
FEDERAL AGENCIES	
Subscriptions:	
Paper or fiche	523–5243
Assistance with Federal agency subscriptions	523–5243

For other telephone numbers, see the Reader Aids section at the end of this issue.

FEDERAL REGISTER WORKSHOP

THE FEDERAL REGISTER: WHAT IT IS AND HOW TO USE IT

FOR: Any person who uses the Federal Register and Code of Federal Regulations.

WHO: Sponsored by the Office of the Federal Register.

WHAT: Free public briefings (approximately 3 hours) to present:

1. The regulatory process, with a focus on the Federal Register system and the public's role in the development of regulations.
2. The relationship between the Federal Register and Code of Federal Regulations.
3. The important elements of typical Federal Register documents.
4. An introduction to the finding aids of the FR/CFR system.

WHY: To provide the public with access to information necessary to research Federal agency regulations which directly affect them. There will be no discussion of specific agency regulations.

WASHINGTON, DC

WHEN: February 21, 1996 at 9:00 am

WHERE: Office of the Federal Register Conference Room, 800 North Capitol Street, NW., Washington, DC (3 blocks north of Union Station Metro)

RESERVATIONS: 202–523–4538

Printed on recycled paper containing 100% post consumer waste

Contents

Federal Register
Vol. 61, No. 31
Wednesday, February 14, 1996

Agency for Toxic Substances and Disease Registry
NOTICES
Hazardous substance releases and facilities:
Public health assessments and effects—
Quarterly listing, 5787–5788

Agriculture Department
See Forest Service
See Rural Utilities Service

Air Force Department
NOTICES
Environmental statements; availability, etc.:
Dobbins Air Reserve Base, GA; proposed wing conversion and airspace modification, 5753

Architectural and Transportation Barriers Compliance Board
PROPOSED RULES
Americans with Disabilities Act; implementation:
Accessibility guidelines—
Play facilities regulatory negotiation committee; establishment and meeting, 5723
NOTICES
Meetings:
Americans with Disabilities Act Accessibility Advisory Committee, 5738

Army Department
See Engineers Corps

Census Bureau
NOTICES
Agency information collection activities:
Proposed collection; comment request, 5738–5739

Centers for Disease Control and Prevention
NOTICES
CDC WONDER Information systems; availability, 5785
Meetings:
Clinical Laboratory Improvement Advisory Committee, 5785–5786

Children and Families Administration
NOTICES
Grants and cooperative agreements; availability, etc.:
Runaway and homeless youth program, 5777–5780
Medicaid:
Welfare reform and combined welfare reform/Medicaid demonstration projects—
December and January, 5780–5785

Coast Guard
RULES
Organization, functions, and authority delegations:
Great Lakes pilotage regulations; responsibility transferred to Saint Lawrence Seaway Development Corporation, 5720–5721
Regattas and marine parades:
Great Lakes Annual Marine Events, 5680–5684
NOTICES
Meetings:
Second Coast Guard District industry day, 5829–5830

Commerce Department
See Census Bureau
See Export Administration Bureau
See National Oceanic and Atmospheric Administration

Consumer Product Safety Commission
NOTICES
Meetings; Sunshine Act, 5838

Defense Department
See Air Force Department
See Engineers Corps
NOTICES
Federal Acquisition Regulation (FAR):
Agency information collection activities—
Submission for OMB review; comment request, 5753–5754

Education Department
NOTICES
Grants and cooperative agreements; availability, etc.:
Strengthening institutions, hispanic-serving institutions, and endowment challenge programs, 5908–5909

Employment and Training Administration
NOTICES
Adjustment assistance:
AEG Transportation Systems, 5805
Consolidated Natural Gas Transmission et al., 5805–5806
D & H Co., 5806
Gothels Park Cutting, Inc., et al., 5806–5807
Marshall Electric Corp. et al., 5807–5808

Energy Department
See Energy Efficiency and Renewable Energy Office
See Federal Energy Regulatory Commission

Energy Efficiency and Renewable Energy Office
NOTICES
Consumer product test procedures; waiver petitions:
Superior Fireplace Co., 5755–5758

Engineers Corps
NOTICES
Environmental statements; notice of intent:
Gulf Intracoastal Waterway, TX, 5754–5755

Environmental Protection Agency
RULES
Air pollution control; new motor vehicles and engines:
Nonconforming vehicles importation, 5840–5843
Air quality implementation plans; approval and promulgation; various States; air quality planning purposes; designation of areas:
Michigan, 5707–5711
Air quality implementation plans; approval and promulgation; various States:
California, 5701–5704
Maine, 5690–5694
Massachusetts, 5696–5699
Michigan, 5694–5696
Nebraska, 5699–5701

North Carolina, 5689–5690
Washington and Alaska, 5704–5705
Clean Air Act:
State operating permits programs—
Tennessee, 5705–5707
Hazardous waste program authorizations:
Alabama, 5718–5719
Pesticides; tolerances in food, animal feeds, and raw agricultural commodities:
Imidacloprid, 5711–5712, 5714–5716
Octadecanoic acid, 12-hydroxy-, homopolymer, octadecanoate, 5712–5714
Pelargonic acid, 5716–5718
PROPOSED RULES
Air quality implementation plans; approval and promulgation; various States:
California, 5725–5726
Maine, 5724
Massachusetts, 5725
Michigan, 5724–5725
Nebraska, 5725
North Carolina, 5723–5724
Pesticides; tolerances in food, animal feeds, and raw agricultural commodities:
Lactofen, 5726–5728
Oxo-alkyl acetates, 5728–5730
NOTICES
Agency information collection activities:
Proposed collection; comment request, 5761–5762
Committees; establishment, renewal, termination, etc.:
FIFRA Scientific Advisory Panel, 5762–5766
Meetings:
Lead-based paint hazards; dialogue process on identification, 5766–5767
Pesticide registration, cancellation, etc.:
Ciba-Geigy Corp. et al., 5768–5769
Rohm & Haas, 5769–5770
S.C. Johnson & Son, Inc., 5770–5771
Pesticides; experimental use permits, etc.:
Aspergillus flavus (AF36), 5771–5772
Trichodex, 5767–5768
Pesticides; temporary tolerances:
Northrup King Corp., 5772–5773

Executive Office of the President
See Presidential Documents

Export Administration Bureau
RULES
Export licensing:
Semiconductor manufacturing equipment, General License GFW expansion; and computer export control reform; correction, 5677–5678

Federal Aviation Administration
RULES
Airworthiness directives:
Fairchild, 5675–5677
NOTICES
Grants and cooperative agreements; availability, etc.:
Center of Excellence (COE) in Operations Research; solicitation of proposals from academic institutions, 5830–5831
National Airspace System (NAS) Architecture version 1.5; public comment request, 5831–5832
Passenger facility charges; applications, etc.:
Memphis International Airport, TN, 5832–5834

Federal Communications Commission
RULES
Radio stations; table of assignments:
Montana, 5721–5722
South Carolina, 5722
NOTICES
Rulemaking proceedings; petitions filed, granted, denied, etc., 5773–5774

Federal Contract Compliance Programs Office
PROPOSED RULES
Affirmative action and nondiscrimination obligations of contractors and subcontractors regarding individuals with disabilities, 5902–5905

Federal Deposit Insurance Corporation
RULES
Foreign banks:
Domestic retail deposit activities by state licensed branches, 5671–5675

Federal Energy Regulatory Commission
NOTICES
Applications, hearings, determinations, etc.:
Columbia Gas Transmission Corp., 5758
Energy Transfer Group, L.L.C., 5760
Ocean Energy Services, Inc., 5760
PowerMark, L.L.C., 5760–5761
Questar Energy Trading Co., 5758
Texaco Natural Gas Inc., 5758–5759
Utility Management & Consulting, Inc., 5759–5760
Williston Basin Interstate Pipeline Co., 5759

Federal Maritime Commission
NOTICES
Freight forwarder licenses:
SafeTech Int'l, Inc., 5774
ICC Termination Act of 1995:
Noncontiguous domestic trade tariffs; comment request, 5835

Federal Reserve System
NOTICES
Federal Open Market Committee:
Domestic policy directives, 5775–5776
Applications, hearings, determinations, etc.:
ABC Bancorp et al., 5774
BNCCORP, Inc., 5774
Capital Corp of the West, 5774–5775
Croak, Robert H., et al., 5775

Federal Trade Commission
RULES
Appliances, consumer, energy costs and consumption information in labeling and advertising:
Residential energy sources; average unit energy costs, 5679–5680
NOTICES
Premerger notification waiting periods; early terminations, 5776–5777

Fish and Wildlife Service
RULES
Alaska National Interest Lands Conservation Act; Title VIII implementation (subsistence priority):
Correcting amendments, 5685–5689
NOTICES
Federal wildland fire management policy and program review, 5737

Food and Drug Administration
PROPOSED RULES
Human drugs:
Labeling of drug products (OTC)—
Phenylpropanolamine preparation drug products; warning label, 5912–5916
Topical antimicrobial drug products for over-the-counter human use—
OTC first aid antibiotic drug products; final monograph, 5918–5920
NOTICES
Biological products:
Human somatic cell and gene therapy, points to consider; document availability, 5786–5787
GRAS or prior-sanctioned ingredients:
Solvay Enzymes, Inc., 5787

Foreign Claims Settlement Commission
NOTICES
Agency information collection activities:
Proposed collection; comment request, 5804–5805

Forest Service
RULES
Alaska National Interest Lands Conservation Act; Title VIII implementation (subsistence priority):
Correcting amendments, 5685–5689
National Forest System timber; sale and disposal:
Fair market value determination; appraisal procedures, 5684–5685
NOTICES
Federal wildland fire management policy and program review, 5737

General Services Administration
NOTICES
Federal Acquisition Regulation (FAR):
Agency information collection activities—
Submission for OMB review; comment request, 5753–5754
Fixed price service contracts; criteria, 5777

Health and Human Services Department
See Agency for Toxic Substances and Disease Registry
See Centers for Disease Control and Prevention
See Children and Families Administration
See Food and Drug Administration
See Health Resources and Services Administration
See Indian Health Service
See National Institutes of Health

Health Resources and Services Administration
NOTICES
Agency information collection activities:
Proposed collection; comment request, 5788–5789

Housing and Urban Development Department
RULES
Low income housing:
Housing assistance payments (Section 8)—
Single room occupancy program for homeless individuals, 5850–5852
NOTICES
Grant and cooperative agreement awards:
Housing counseling program (FY 1994), 5790–5797
Lobbying information and registrations; reports, 5854–5900

Indian Affairs Bureau
NOTICES
Federal wildland fire management policy and program review, 5737

Indian Health Service
NOTICES
Grants and cooperative agreements; availability, etc.:
Health professions educational loan repayment program, 5789
Health professions preparatory, pregraduate, and Indian health scholarship (professions) program (FY 1996), 5789

Interior Department
See Fish and Wildlife Service
See Indian Affairs Bureau
See Land Management Bureau
See National Biological Service
See National Park Service

International Trade Commission
NOTICES
Country of origin marking:
Laws, regulations, and practices review, 5802–5803
Import investigations:
Melamine institutional dinnerware from—
China et al., 5801–5802
Patent-based exclusion orders; extension in conformity with Uruguay Round Agreements Act, 5803
Polyvinyl alcohol from—
China et al., 5804

Justice Department
See Foreign Claims Settlement Commission
See Prisons Bureau
NOTICES
Pollution control; consent judgments:
Interstate Distribution Center Associates, Ltd., et al., 5805

Labor Department
See Employment and Training Administration
See Federal Contract Compliance Programs Office
See Pension and Welfare Benefits Administration

Land Management Bureau
RULES
Public land orders:
Oregon, 5719–5720
NOTICES
Agency information collection activities:
Proposed collection; comment request, 5797–5798
Closure of public lands:
Oregon, 5798
Environmental statements; availability, etc.:
Michigan lighthouse planning analysis, 5798–5799
Federal wildland fire management policy and program review, 5737
Meetings:
Northern and Eastern Colorado Desert coordinated management plan; public workshops, 5799–5800
Realty actions; sales, leases, etc.:
Wisconsin, 5800

Maritime Administration
NOTICES
Applications, hearings, determinations, etc.:
OMI Courier Transport, Inc., et al., 5834

National Aeronautics and Space Administration
NOTICES
Federal Acquisition Regulation (FAR):
Agency information collection activities—
Submission from OMB review; comment request, 5753–5754

National Biological Service
NOTICES
Federal wildland fire management policy and program review, 5737

National Highway Traffic Safety Administration
PROPOSED RULES
Motor vehicle safety standards and consumer information:
Truck-camper loading, 5730–5736

National Institutes of Health
NOTICES
Meetings:
National Heart, Lung, and Blood Institute, 5790
National Institute of Environmental Health Sciences, 5790
National Institute on Deafness and Other Communication Disorders, 5790

National Oceanic and Atmospheric Administration
NOTICES
National Weather Service; modernization and restructuring:
Weather Service and Forecast Offices; consolidations, 5739–5752
Permits:
Foreign fishing, 5752–5753
Marine mammals, 5753

National Park Service
NOTICES
Federal wildland fire management policy and program review, 5737
National Register of Historic Places:
Pending nominations, 5800–5801

National Science Foundation
NOTICES
Meetings; Sunshine Act, 5838

Nuclear Regulatory Commission
NOTICES
Environmental statements; availability, etc.:
Duke Power Co., 5808–5809
Operating licenses, amendments; no significant hazards considerations; biweekly notices, 5809–5827

Pension and Welfare Benefits Administration
NOTICES
Employee benefit plans:
1995 form 5500 series; change; comment request; correction, 5808

Presidential Documents
ADMINISTRATIVE ORDERS
Haiti; delegation of authority under Foreign Operations, Export Financing and Related Programs Appropriations Act, 1996 (Memorandum of February 5, 1996), 5669

Prisons Bureau
PROPOSED RULES
Inmate control, custody, care, etc.:
Correspondence; restricted special mail procedures, 5846–5847

Public Health Service
See Agency for Toxic Substances and Disease Registry
See Centers for Disease Control and Prevention
See Food and Drug Administration
See Health Resources and Services Administration
See Indian Health Service
See National Institutes of Health

Railroad Retirement Board
NOTICES
Meetings; Sunshine Act, 5838

Research and Special Programs Administration
RULES
Pipeline safety:
Drug use and alcohol misuse control in natural gas, liquefied natural gas, and hazardous liquid pipeline operations; alcohol misuse prevention program, 5722
NOTICES
Alcohol Misuse Prevention Program:
Control of drug use and alcohol misuse in natural gas, liquefied natural gas, and hazardous liquid pipeline operations, 5834

Rural Utilities Service
NOTICES
Agency information collection activities:
Proposed collection; comment request, 5737–5738

Saint Lawrence Seaway Development Corporation
RULES
Organization, functions, and authority delegations:
Great Lakes pilotage regulations; responsibility transferred from Coast Guard, 5720–5721

Securities and Exchange Commission
NOTICES
Options price reporting authority, 5827–5828

Small Business Administration
NOTICES
Applications, hearings, determinations, etc.:
Commerce Capital, L.P., 5828–5829
Societe Generale Capital Corp., 5829

Surface Transportation Board
NOTICES
ICC Termination Act of 1995:
Noncontiguous domestic trade tariffs; comment request, 5835

Thrift Supervision Office
NOTICES
Applications, hearings, determinations, etc.:
Catskill Savings Bank, 5835–5836
Commonwealth, M.H.C., 5836
Great American Federal Savings & Loan Association, 5836
North Central Bancshares, M.H.C., 5836
Pomona First Federal Savings & Loan Association, 5836

Toxic Substances and Disease Registry Agency
See Agency for Toxic Substances and Disease Registry

Transportation Department
See Coast Guard
See Federal Aviation Administration
See Maritime Administration
See National Highway Traffic Safety Administration
See Research and Special Programs Administration
See Saint Lawrence Seaway Development Corporation
See Surface Transportation Board
NOTICES
Agency information collection activities:
Proposed collection; comment request, 5830

Treasury Department
See Thrift Supervision Office

Veterans Affairs Department
NOTICES
Cost-of-living adjustments:
Compensation and dependency and idemnity compensation (DIC) programs, 5836–5837
Meetings:
Minority Veterans Advisory Committee, 5837

Separate Parts In This Issue

Part II
Environmental Protection Agency, 5840–5843

Part III
Justice Department, Prisons Bureau, 5846–5847

Part IV
Housing and Urban Development Department, 5850–5852

Part V
Housing and Urban Development Department, 5854–5900

Part VI
Labor Department, Federal Contract Compliance Programs Office, 5902–5905

Part VII
Education Department, 5908–5909

Part VIII
Health and Human Services Department, Food and Drug Administration, 5912–5916

Part IX
Health and Human Services Department, Food and Drug Administration, 5918–5920

Reader Aids
Additional information, including a list of public laws, telephone numbers, reminders, and finding aids, appears in the Reader Aids section at the end of this issue.

Electronic Bulletin Board
Free Electronic Bulletin Board service for Public Law numbers, Federal Register finding aids, and a list of documents on public inspection is available on 202–275–1538 or 275–0920.

CFR PARTS AFFECTED IN THIS ISSUE

A cumulative list of the parts affected this month can be found in the Reader Aids section at the end of this issue.

3 CFR

Administrative Orders:

Memorandum:

February 5, 1996 5669

12 CFR

346 5671

14 CFR

39 5675

15 CFR

771 5677
776 5677
799 5677

16 CFR

305 5679

21 CFR

Proposed Rules:

201 5912
333 5918
369 5912

24 CFR

882 5850

28 CFR

Proposed Rules:

540 5846

33 CFR

100 5680

36 CFR

223 5684
242 5685

Proposed Rules:

1190 5723
1191 5723

40 CFR

52 (7 documents) 5689, 5690, 5694, 5696, 5699, 5701, 5704
70 5705
81 5707
85 5840
180 (4 documents) 5711, 5712, 5714, 5716
271 5718

Proposed Rules:

52 (6 documents) 5723, 5724, 5725
180 (2 documents) 5726, 5728

41 CFR

Proposed Rules:

60–741 5902

43 CFR

Public Land Orders:

7184 5719

46 CFR

Ch. III 5720
401 5720
402 5720

47 CFR

73 (2 documents) 5721, 5722

49 CFR

199 5722

Proposed Rules:

571 5730
575 5730

50 CFR

100 5685

Federal Register
Vol. 61, No. 31
Wednesday, February 14, 1996

Presidential Documents

Title 3—

The President

Memorandum of February 5, 1996

Delegation of Authority Regarding Provision on Haiti under the Foreign Operations, Export Financing and Related Programs Appropriations Act, 1996, as Enacted by the Balanced Budget Downpayment Act, I (P.L. 104–99)

Memorandum for the Secretary of State

By virtue of the authority vested in me by the Constitution and laws of the United States of America, including section 301 of title 3 of the United States Code, I hereby delegate to the Secretary of State the functions vested in me under section 586 of the Foreign Operations, Export Financing and Related Programs Appropriations Act, 1996 as enacted by the Balanced Budget Downpayment Act, I, title III, section 301 (Public Law 104–99).

Any reference in this memorandum to any Act shall be deemed to be a reference to such Act as amended from time to time.

The functions delegated by this memorandum may be redelegated within the Department of State, as appropriate.

The Secretary of State is authorized and directed to publish this memorandum in the Federal Register.

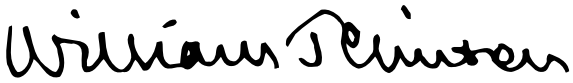

THE WHITE HOUSE,
Washington, February 5, 1996.

[FR Doc. 96–3522
Filed 2–13–96; 8:45 am]
Billing code 4710–10–M

Rules and Regulations

Federal Register
Vol. 61, No. 31
Wednesday, February 14, 1996

This section of the FEDERAL REGISTER contains regulatory documents having general applicability and legal effect, most of which are keyed to and codified in the Code of Federal Regulations, which is published under 50 titles pursuant to 44 U.S.C. 1510.

The Code of Federal Regulations is sold by the Superintendent of Documents. Prices of new books are listed in the first FEDERAL REGISTER issue of each week.

FEDERAL DEPOSIT INSURANCE CORPORATION

12 CFR Part 346

RIN 3064–AB62

Foreign Banks

AGENCY: Federal Deposit Insurance Corporation (FDIC or Corporation).

ACTION: Final rule.

SUMMARY: Section 107 of the Riegle-Neal Interstate Banking and Branching Efficiency Act of 1994 (Riegle-Neal Act) amended section 6 of the International Banking Act of 1978 (IBA) to provide that the FDIC shall amend its regulation concerning domestic retail deposit activities by state-licensed branches of foreign banks. The final rule amends the FDIC's regulations to restrict the amount and types of initial deposits of less than $100,000 which can be accepted by an uninsured state-licensed branch of a foreign bank. The final rule is intended to afford equal competitive opportunities to foreign and domestic banks.

EFFECTIVE DATE: The final rule is effective on April 1, 1996.

FOR FURTHER INFORMATION CONTACT: Charles V. Collier, Assistant Director, Division of Supervision, (202) 898–6850; Jeffrey M. Kopchik, Counsel, Legal Division, (202) 898–3872, Federal Deposit Insurance Corporation, 550 17th Street, N.W., Washington, D.C., 20429.

SUPPLEMENTARY INFORMATION:

Background

Section 107 of the Riegle-Neal Act (Pub. L. 103–328, 108 Stat. 2358) amended section 6 of the IBA (12 U.S.C. 3104) to provide that the FDIC shall amend its regulation concerning domestic retail deposit activity by state-licensed branches of foreign banks (state-licensed branches).[1] Section 6 of the IBA, 12 U.S.C. 3104, concerns the insurance of deposits maintained at domestic branches and subsidiaries of foreign banks. Generally, section 6 provides that United States branches of foreign banks may not accept domestic retail deposits unless the branch is insured by the FDIC. Section 6 goes on to state that, after December 19, 1991, foreign banks may not establish any *de novo* insured branches in the United States. Section 107 of the Riegle-Neal Act added a new subsection (a) to section 6 of the IBA. This new subsection provides that:

> In implementing this section, the Comptroller and the Federal Deposit Insurance Corporation shall each, by affording equal competitive opportunities to foreign and United States banking organizations in their United States operations, ensure that foreign banking organizations do not receive an unfair competitive advantage over United States banking organizations.

12 U.S.C. 3104(a).

In revising section 6 of the IBA, Congress made it clear that foreign banks operating in the United States should not have an unfair competitive advantage over domestically chartered banks. Thus, Congress directed the FDIC and the OCC to revise their respective regulations implementing IBA section 6 to ensure that foreign banks do not receive an unfair competitive advantage over United States banks by affording equal competitive opportunities to both.

The Current Regulatory Scheme

Section 346.4 of the FDIC's regulations (12 CFR 346.4) requires that any state-licensed branch which is engaged in ''domestic retail deposit activity'' shall be an insured branch. Section 346.6 provides that a state-licensed branch will not be deemed to be engaged in domestic retail deposit activity which requires the branch to be insured if initial deposits of less than $100,000 are derived solely from certain enumerated sources. The acceptance of initial deposits of $100,000 or more is not considered to be retail deposit activity and, thus, deposit insurance is not required for a state-licensed branch which accepts only these types of initial deposits.

Section 346.6 delineates five categories of depositors from which a state-licensed branch may accept initial deposits of less than $100,000 without triggering the insurance requirement. The five categories of depositors are:

(1) Any business entity, including any corporation, partnership, sole proprietorship, association or trust, which engages in commercial activity for profit;

(2) Any governmental unit, including the United States government, any state government, any foreign government and any political subdivision or agency of the foregoing;

(3) Any international organization which is comprised of two or more nations;

(4) Funds received in connection with any draft, check, or similar instrument issued by the branch for the transmission of funds; and

(5) Any depositor who is not a citizen of the United States and who is not a resident of the United States at the time of the initial deposit.

This section of the regulation also includes a general exception (commonly referred to as the ''*de minimis* exception'') which provides that an uninsured state-licensed branch may accept initial deposits of less than $100,000 from any depositor if the amount of such deposits does not exceed on an average daily basis five percent of the average of the branch's deposits for the last 30 days of the most recent calendar quarter.

The Riegle-Neal Act

In directing the FDIC to amend its regulation to ensure that foreign banking organizations do not have an unfair competitive advantage over United States banking organizations, Congress directed the FDIC to ''consider whether to permit'' an uninsured state-licensed branch of a foreign bank to accept initial deposits of less than $100,000 from a smaller class of depositors than is currently delineated in § 346.6. This suggested smaller class is limited to:

(1) Individuals who are not citizens or residents of the United States at the time of the initial deposit;

(2) Individuals who:

(i) Are not citizens of the United States;

(ii) Are residents of the United States; and

[1] The Riegle-Neal Act requires the FDIC to consult with the Office of the Comptroller of the Currency (OCC) in the process of making these amendments in order to assure uniformity. The FDIC has worked in close consultation with the OCC in order to achieve substantive uniformity.

(iii) Are employed by a foreign bank, foreign business, foreign government, or recognized international organization;

(3) Persons to whom the branch or foreign bank has extended credit or provided other nondeposit banking services;

(4) Foreign businesses and large United States businesses;

(5) Foreign governmental units and recognized international organizations; and

(6) Persons who are depositing funds in connection with the issuance of a financial instrument by the branch for the transmission of funds.

Moreover, section 107(b)(3) of the Riegle-Neal Act provides that any *de minimis* exception shall not exceed one percent of the average deposits at the branch, as opposed to the current five percent. The FDIC may establish a reasonable transition rule to facilitate any termination of deposit taking activities. *See* section 107(b)(5)(B) of the Riegle-Neal Act.

As pointed out in the preamble to the proposed regulation, if Congress had intended the FDIC to adopt these suggested criteria verbatim, it could have so required. *See* 60 FR 36075. However, the statute explicitly provides that the FDIC ''shall consider whether to permit'' an uninsured state-licensed branch to accept initial deposits of less than $100,000 from the enumerated sources. By requiring only that the FDIC consider the statutory criteria, Congress explicitly recognized that the ultimate decision should be made by the FDIC, consistent with the statutory objective set forth in IBA section 6(a), in the exercise of its regulatory discretion and expertise.

The Proposal

On July 13, 1995, the FDIC published for public comment a notice of proposed rulemaking seeking to implement section 107 of the Riegle-Neal Act. 60 FR 36074 (July 13, 1995).[2] The proposal provided that uninsured state-licensed branches of foreign banks would be permitted to accept initial deposits of less than $100,000 from the six categories of depositors specified in sections 107(b)(2) (A) through (F) of the Riegle-Neal Act. In addition, the proposal expanded and added certain exceptions, consistent with Congressional intent. The comment period closed on September 11, 1995. In response to the notice, the FDIC received a total of four comment letters, three from industry trade associations and one from an association representing state bank regulators. One commenter fully supported the FDIC's proposal with no suggested revisions. The remaining three commenters supported the proposal, but suggested certain revisions. Of the three commenters who suggested revisions, two urged the FDIC to expand the § 346.6 exceptions to permit uninsured state-licensed branches to accept more types of initial deposits of less than $100,000. Conversely, one commenter urged the FDIC to restrict one of the proposed exceptions in order to lessen the number of initial deposits of less than $100,000 that may be accepted by an uninsured branch. The commenters' specific suggestions and the FDIC's responses thereto are discussed in detail below.

Deposit Taking Activities of Uninsured Foreign Branches

The objective set forth by Congress in section 6(a) of the IBA is to afford equal competitive opportunities to foreign and United States banking organizations by ensuring that foreign banks do not receive an unfair competitive advantage. The preamble to the proposed regulation set forth in great detail the information and data which the FDIC reviewed in considering this question. 60 FR 36075. The FDIC concluded that ''uninsured state-licensed branches of foreign banks do not have an overall unfair competitive advantage over domestic banking organizations.'' *Id.* All of the comment letters agreed with this conclusion.

The Comments and Final Rule

Two commenters suggested that the proposed § 346.6(a)(3) exception, the so-called ''nondeposit banking services exception'', be expanded to include affiliates of the person to whom the branch or foreign bank has extended credit or provided some other nondeposit banking service as well as persons who have received such services from an affiliate of the branch or foreign bank. The commenters urged this change by pointing out that, in today's complex business world, depositors often operate through affiliates. Similarly, foreign banks which operate uninsured branches in the United States often offer certain financial services through affiliates of the bank. The commenters urged the FDIC to recognize this characteristic of the contemporary business environment in the final regulation. Significantly, one commenter pointed out that since the definition of ''foreign bank'' in the IBA, 12 U.S.C. 3101(7), explicitly includes any affiliate of the foreign bank, § 346.6(a)(3) of the final regulation should include these affiliates as well.

The FDIC has carefully considered this comment and agrees that the § 346.6(a)(3) exception should be expanded to include persons who have received a loan or other nondeposit banking service from an affiliate of the branch or foreign bank. This revision recognizes that the IBA definition of ''foreign bank'' includes affiliates. However, this exception does not include a person who has dealt with any affiliate of a foreign bank in any capacity. In crafting this regulation, the FDIC is required to interpret and harmonize section 107 of the Riegle-Neal Act, the IBA and the Federal Deposit Insurance Act (FDI Act). Despite the fact that the IBA definition of ''foreign bank'' includes any subsidiary or affiliate, the § 346.1(a) definition of ''foreign bank'' includes only the bank itself. This difference recognizes that § 346 of the FDIC's rules regulates the deposit taking activities of foreign banks operating branches in the United States. It is not intended to regulate or somehow sanction the activities of affiliates or subsidiaries of the foreign bank which may desire to operate in this country. Section 107(b)(2)(C) of the Riegle-Neal Act is limited to ''persons to whom the branch or foreign bank *has extended credit or provided other nondeposit banking services.*'' [Emphasis added]. It does not cover persons who have dealt with any affiliate of the foreign bank in any capacity. The FDIC interprets this qualifying phrase to indicate Congress' intent that, despite the broad definition of ''foreign bank'' contained in the IBA, the only affiliates of a foreign bank which should be included in the § 346.6(a)(3) exception are those which are capable of extending credit or providing some other nondeposit banking service to a prospective depositor. For example, if a depositor desiring to make an initial deposit of less than $100,000 in an uninsured branch has leased a safe deposit box from an affiliate of the foreign bank within the past twelve months, that deposit would qualify under the § 346.6(a)(3) exception since the prospective depositor would be the recipient of a nondeposit banking service. Any state-licensed branch that is unsure whether a deposit of less than $100,000 could be accepted pursuant to the § 346.6(a)(3) exception should contact the FDIC for guidance.

With regard to affiliates of the depositor, the arguments are not as compelling. First, and most persuasively, the IBA does not define the term ''depositor'', ''customer'' or

[2] The OCC's notice of proposed rulemaking was published at 60 FR 34907 (July 5, 1995).

''person''. Thus, there is no indication that Congress intended to include affiliates of persons to whom the branch or foreign bank has extended credit or provided some other nondeposit banking service. Second, while depositors may operate through affiliates in a fashion similar to the foreign branch or bank, the inclusion of affiliates in this context may very well conflict with the section 107(b)(2)(D) exception which limits retail deposit taking to ''large United States businesses''. That is, the inclusion of affiliates of a depositor who has received some nondeposit banking service could very well include small subsidiaries of the depositor. Thus, the FDIC has decided not to expand this exception to include affiliates of the depositor.

It was also suggested that the proposed § 346.6(a)(3) nondeposit banking service exception be expanded to apply to situations where the affiliate has provided depository services to the customer or its affiliate. The FDIC is of the opinion that this further expansion of the exception is unwarranted. The key to section 107(b)(2)(C) of the Riegle-Neal Act is its limitation to ''nondeposit'' banking services. It would be inappropriate for the FDIC to disregard this limitation even while recognizing that, except for the mandatory change to the *de minimis* rule, Congress provided the Corporation with only suggested parameters for the types of deposits of less than $100,000 that uninsured state-licensed branches should be permitted to accept.

One commenter recommended that the FDIC modify the proposal to permit uninsured state-licensed branches to accept initial deposits of less than $100,000 from all businesses, including foundations and other entities which are not engaged in commercial activity for profit. Section 346.6(a)(1) of the current regulation exempts initial deposits of less than $100,000 from ''any business entity * * * engaged in commercial activity for profit''. It is the FDIC's understanding that, after the *de minimis* exception, this exception is the one most often utilized by state-licensed branches. The commenter argued that adopting this suggestion would make the regulation less burdensome and easier to administer, as well as promote international trade finance.

The FDIC remains unconvinced that the final regulation should permit uninsured branches to accept deposits of less than $100,000 from any business entity, including those not engaged in a commercial activity for profit, such as foundations. Section 107 of the Riegle-Neal Act expresses Congress' expectation that the overall scope of § 346.6 would be reduced. While the ultimate decision concerning what exceptions should be included in the final regulation is to be made by the FDIC in the exercise of its regulatory discretion and expertise, the FDIC cannot ignore Congressional intent.

In the alternative, the commenter who suggested an exception for all business deposits also suggested that the proposed § 346.6(a)(4) exception for large United States' businesses should be expanded by revising the definition of ''large United States business'' that appears in § 346.1(t) of the proposal. The commenter proposed that alternate criteria be added to the definition so that any business with total assets of more than $1 million or 50 or more employees would also be considered a ''large United States business''. However, the commenter did not include any support for its use of the $1 million of assets or 50 or more employees criteria. Another commenter expressed the opposite concern, that the FDIC's suggested $1 million in gross revenue figure should be increased to $25 million or possibly $100 million, in order to narrow the exception. In view of these contradictory suggestions and the absence of data supporting them, the FDIC has decided not to make any changes to the definition of ''large United States business'' as set forth in the proposed regulation.

One comment letter requested clarification of the application of the proposed transition rule which is set forth in § 346.6(c) of the proposed regulation. That commenter pointed out that, with regard to time deposits, the proposal could require state-licensed branches to reclassify or divest some time deposits very shortly after the effective date of the final regulation if the deposit matures during this period. This commenter suggested that the proposal be modified to give state-licensed branches a reasonable period of time to reclassify or divest time deposits that mature very shortly after the final regulation's effective date. The FDIC agrees with this suggestion and has amended § 346.6(c)(2) of the proposal to provide that state-licensed branches will have at least 90 days after the effective date of the final regulation to reclassify or divest such time deposits.

This comment letter also recommended that branches should be required to reclassify or divest only those deposits which were accepted under the five percent *de minimis* exception, as opposed to deposits accepted pursuant to any of the § 346.6(a) exceptions. The FDIC considered this option at great length, but in order to achieve the uniformity required by the statute, the agency is adhering to the transition rule as described in the proposal which requires the reclassification or divestiture of all deposit accounts which were originally accepted pursuant to any of the § 346.6(a) exceptions.

This same comment letter expressed some confusion concerning other aspects of how the FDIC will apply the transition rule. In an effort to avoid confusion, the FDIC would like to clarify that a deposit (including a time deposit) may be reclassified at any time during the transition period. If a time deposit matures prior to the end of the five year transition period, it must be reclassified or divested at that time. However, no time deposit need be reclassified or divested sooner than 90 days after the effective date of the final regulation.

In the preamble to the proposed regulation, 60 FR 36077, the FDIC noted that it was considering adding a new exception that would permit an uninsured state-licensed branch to accept initial deposits of less than $100,000 from immediate family members of individuals who qualify for any of the exceptions listed in proposed §§ 346.6(a) (1) through (6). The one commenter who mentioned this issue supported the idea of including such an additional exception in the final rule and stated that such an exception would not create any unfair competitive advantage for foreign banks. The FDIC has considered this issue at length and has concluded that such an exception would be overly broad and inconsistent with Congressional intent. However, the FDIC has decided to revise § 346.6(a)(3) of the proposal to include immediate family members of natural persons to whom the branch or foreign bank (including any affiliate thereof) has extended credit or provided other nondeposit banking services within the past twelve months or has entered into a written agreement to provide such services within the next twelve months.

With regard to § 346.6(b), ''Application for an exemption'', it was suggested that the FDIC should permit the request to be submitted by the bank's senior management rather than requiring authorization by the foreign bank's board of directors. The FDIC agrees that this change would make the regulation less burdensome. Moreover, in a somewhat different context, § 346.101(d) of the FDIC's regulations permits an application evidencing approval by senior management if a board resolution is not required by the foreign bank's organizational

documents. Thus, the FDIC has decided to amend § 346.6(b) in the same fashion.

One commenter requested confirmation of its interpretation of the preamble to the proposed rule that existing deposits which were not originally subject to the § 346.6 exceptions, because the initial deposit establishing the account was $100,000 or more, would not be subject to the revised regulation even if the first deposit in the account after the effective date of final regulation is less than $100,000. This interpretation is correct. The only deposits which must be reclassified or divested after this final rule becomes effective are those which were established with less than $100,000 pursuant to one of the exceptions set forth in current §§ 346.6(a) (1) through (6).

Calculation of the De Minimis

One commenter expressed some confusion concerning how the *de minimis* amount should be calculated and whether this amendment changes the calculation method currently being used under the existing regulation. This final amendment to § 346 is not intended to change how the *de minimis* amount is calculated. The *de minimis* amount is computed as a fraction, the numerator of which consists of the total amount of deposits which have been accepted pursuant to the *de minimis* exception. The FDIC wishes to make it clear that the numerator is comprised of the total amount of deposits accepted under the *de minimis* exception, not just the amount of the initial deposits of less than $100,000 which were accepted to open the accounts. The denominator of the fraction consists of the average amount of third party deposits maintained by the branch during the last thirty calendar days of the most recent calendar quarter. See 44 FR 40057, 40061 (July 9, 1979); FDIC Legal Division Staff Advisory Opinion (unpublished) dated December 16, 1985 from Katharine H. Haygood, Esq.

Effective Date

Section 302(b) of the Riegle Community Development and Regulatory Improvement Act of 1994 (Pub. L. 103–325, September 29, 1994) provides that new regulations and amendments to regulations prescribed by the federal banking agencies shall take effect on the first day of a calendar quarter which begins on or after the date on which the regulation is published in final form, unless the agency determines for good cause that the regulation should become effective at an earlier date or the regulation is required to become effective at some other date determined by law. The Administrative Procedure Act (5 U.S.C. 551 *et seq.*) provides that regulations shall become effective thirty days after their publication in the Federal Register. 5 U.S.C. 553. Thus, this amendment to Part 346 of its regulations shall become effective on April 1, 1996.

List of Subjects in 12 CFR Part 346

Bank deposit insurance, Foreign banking, Reporting and recordkeeping requirements.

For the reasons set out in the preamble, the FDIC Board of Directors hereby amends 12 CFR part 346 to read as follows:

PART 346—FOREIGN BANKS

1. The authority citation for part 346 continues to read as follows:

Authority: 12 U.S.C. 1813, 1815, 1817, 1819, 1820, 3103, 3104, 3105, 3108.

2. Section 346.1 is amended by adding a sentence to the end of paragraph (a), revising paragraph (o), and adding paragraphs (s) through (v) to read as follows:

§ 346.1 Definitions.

(a) * * * For purposes of § 346.6, the term foreign bank does not include any bank organized under the laws of any territory of the United States, Puerto Rico, Guam, American Samoa, or the Virgin Islands the deposits of which are insured by the Corporation pursuant to the Federal Deposit Insurance Act.

* * * * *

(o) *Affiliate* means any entity that controls, is controlled by, or is under common control with another entity. An entity shall be deemed to ''control'' another entity if the entity directly or indirectly owns, controls, or has the power to vote 25 percent or more of any class of voting securities of the other entity or controls in any manner the election of a majority of the directors or trustees of the other entity.

* * * * *

(s) *Foreign business* means any entity, including but not limited to a corporation, partnership, sole proprietorship, association, foundation or trust, which is organized under the laws of a country other than the United States or any United States entity which is owned or controlled by an entity which is organized under the laws of a country other than the United States or a foreign national.

(t) *Large United States business* means any entity including but not limited to a corporation, partnership, sole proprietorship, association, foundation or trust which is organized under the laws of the United States or any state thereof, and:

(1) Whose securities are registered on a national securities exchange or quoted on the National Association of Securities Dealers Automated Quotation System; or

(2) Has annual gross revenues in excess of $1,000,000 for the fiscal year immediately preceding the initial deposit.

(u) *Person* means an individual, bank, corporation, partnership, trust, association, foundation, joint venture, pool, syndicate, sole proprietorship, unincorporated organization, or any other form of entity.

(v) *Immediate family member of a natural person* means the spouse, father, mother, brother, sister, son or daughter of that natural person.

3. Section 346.6 is revised to read as follows:

§ 346.6 Exemptions from the insurance requirement.

(a) *Deposit activities not requiring insurance.* A state branch will not be deemed to be engaged in a domestic retail deposit activity which requires the branch to be an insured branch under § 346.4 if initial deposits in an amount of less than $100,000 are derived solely from the following:

(1) Individuals who are not citizens or residents of the United States at the time of the initial deposit;

(2) Individuals who:

(i) Are not citizens of the United States;

(ii) Are residents of the United States; and

(iii) Are employed by a foreign bank, foreign business, foreign government, or recognized international organization;

(3) Persons (including immediate family members of natural persons) to whom the branch or foreign bank (including any affiliate thereof) has extended credit or provided other nondeposit banking services within the past twelve months or has entered into a written agreement to provide such services within the next twelve months;

(4) Foreign businesses, large United States businesses, and persons from whom an Edge Corporation may accept deposits under § 211.4(e)(1) of Regulation K of the Board of Governors of the Federal Reserve System, 12 CFR 211.4(e)(1);

(5) Any governmental unit, including the United States government, any state government, any foreign government and any political subdivision or agency of any of the foregoing, and recognized international organizations;

(6) Persons who are depositing funds in connection with the issuance of a

financial instrument by the branch for the transmission of funds or the transmission of such funds by any electronic means; and

(7) Any other depositor but only if the amount of deposits under this paragraph (a)(7) does not exceed on an average daily basis one percent of the average of the branch's deposits for the last 30 days of the most recent calendar quarter, excluding deposits in the branch of other offices, branches, agencies or wholly owned subsidiaries of the bank and the branch does not solicit deposits from the general public by advertising, display of signs, or similar activity designed to attract the attention of the general public. A foreign bank which has more than one state branch in the same state may aggregate deposits in such branches (excluding deposits of other branches, agencies or wholly owned subsidiaries of the bank) for the purpose of this paragraph (a)(7). The average shall be computed by using the sum of the close of business figures for the last 30 calendar days ending with and including the last day of the calendar quarter divided by 30. For days on which the branch is closed, balances from the last previous business day are to be used.

(b) *Application for an exemption.* (1) Whenever a foreign bank proposes to accept at a state branch initial deposits of less than $100,000 and such deposits are not otherwise excepted under paragraph (a) of this section, the foreign bank may apply to the FDIC for consent to operate the branch as a noninsured branch. The Board of Directors may exempt the branch from the insurance requirement if the branch is not engaged in domestic retail deposit activities requiring insurance protection. The Board of Directors will consider the size and nature of depositors and deposit accounts, the importance of maintaining and improving the availability of credit to all sectors of the United States economy, including the international trade finance sector of the United State economy, whether the exemption would give the foreign bank an unfair competitive advantage over United States banking organizations, and any other relevant factors in making this determination.

(2) Any request for an exemption under this paragraph should be in writing and authorized by the board of directors of the foreign bank. If a resolution is not required pursuant to the applicant's organizational documents, the request shall include evidence of approval by the bank's senior management. The request should be filed with the Regional Director of the Division of Supervision for the region where the state branch is located.

(3) The request should detail the kinds of deposit activities in which the branch proposes to engage, the expected source of deposits, the manner in which deposits will be solicited, how this activity will maintain or improve the availability of credit to all sectors of the United States economy, including the international trade finance sector, that the activity will not give the foreign bank an unfair competitive advantage over United States banking organizations and any other relevant information.

(c) *Transition period.* An uninsured state branch may maintain a retail deposit lawfully accepted pursuant to this section prior to April 1, 1996:

(1) If the deposit qualifies pursuant to paragraph (a) or (b) of this section; or

(2) If the deposit does not qualify pursuant to paragraph (a) or (b) of this section, no later than:

(i) In the case of a non-time deposit, five years from April 1, 1996; or

(ii) In the case of a time deposit, the first maturity date of the time deposit after April 1, 1996 or the date that is 90 days after April 1, 1996, whichever is later.

By order of the Board of Directors, dated at Washington, D.C., this 6th day of February, 1996.

Federal Deposit Insurance Corporation.

Jerry L. Langley,

Executive Secretary.

[FR Doc. 96–3274 Filed 2–13–96; 8:45 am]

BILLING CODE 6714–01–P

DEPARTMENT OF TRANSPORTATION

Federal Aviation Administration

14 CFR Part 39

[Docket No. 93–CE–21–AD; Amendment 39–9516; AD 94–07–10 R1]

Airworthiness Directives; Fairchild Aircraft SA226 and SA227 Series Airplanes

AGENCY: Federal Aviation Administration, DOT.

ACTION: Final rule.

SUMMARY: This amendment revises AD 94–07–10, which currently requires the following on Fairchild Aircraft SA226 and SA227 series airplanes: Repetitively inspecting (visually) the wing skin for cracks; dye penetrant inspecting the rib straps if the wing skin is found cracked; and, if any crack is found in the rib straps, repairing the rib straps and modifying the wing skin. That AD references an incorrect dye penetrant inspection when the wing skin is found cracked. This action maintains the requirements of AD 94–07–10, but incorporates reference to the correct dye penetrant inspection for when the wing skin is found cracked. The actions specified by this AD are intended to prevent failure of the wing skin at the top aft outboard corner of the battery box, which could result in structural damage to the wing.

DATES: Effective March 25, 1996.

The incorporation by reference of certain publications listed in the regulations was previously approved by the Director of the Federal Register as of May 27, 1994.

ADDRESSES: Service information that applies to this AD may be obtained from Fairchild Aircraft, P.O. Box 790490, San Antonio, Texas 78279–0490; telephone (210) 824–9421. This information may also be examined at the Federal Aviation Administration (FAA), Central Region, Office of the Assistant Chief Counsel, Attention: Rules Docket 93–CE–21–AD, Room 1558, 601 E. 12th Street, Kansas City, Missouri 64106; or at the Office of the Federal Register, 800 North Capitol Street NW., suite 700, Washington, DC.

FOR FURTHER INFORMATION CONTACT: Mr. Hung Viet Nguyen, Aerospace Engineer, FAA, Airplane Certification Office, 2601 Meacham Boulevard, Fort Worth, Texas 76193–0150; telephone (817) 222–5155; facsimile (817) 222–5960.

SUPPLEMENTARY INFORMATION: A proposal to amend part 39 of the Federal Aviation Regulations (14 CFR part 39) to include an AD that would apply to Fairchild Aircraft SA226 and SA227 series airplanes was published in the Federal Register on June 23, 1995 (60 FR 32628). The action proposed to revise AD 94–07–10 to retain the requirement of repetitively inspecting the wing skin for cracks, and would maintain the dye penetrant inspection requirement but require it in accordance with the correct portion of the ACCOMPLISHMENT INSTRUCTIONS section of the applicable service bulletin. This action also proposed to maintain the option of modifying the wing skin as terminating action for the repetitive inspections. Accomplishment of the proposed actions would be in accordance with one of the following, as applicable:

—Fairchild Service Bulletin (SB) 226–57–018, Issued: January 28, 1993, Revised: June 3, 1993 (pages 4 through 11 and 13 through 15), Revised: July 1, 1993 (page 12) and Revised: October 25, 1993 (pages 1 through 3);

—Fairchild SB 227–57–005, Issued: December 21, 1992, Revised: June 3, 1993 (pages 2 through 11 and 13 through 15), and Revised: July 1, 1993 (pages 1 and 12); or

—Fairchild Aircraft SB CC7–57–002, Issued: January 28, 1993, Revised: June 3, 1993 (pages 2 through 11 and 13 through 15), and Revised: July 1, 1993 (pages 1 and 12).

Interested persons have been afforded an opportunity to participate in the making of this amendment. One comment was received in favor of the proposal and no comments were received regarding the FAA's determination of the cost to the public.

After careful review of all available information related to the subject presented above, the FAA has determined that air safety and the public interest require the adoption of the rule as proposed except for minor editorial corrections. The FAA has determined that these minor corrections will not change the meaning of the AD and will not add any additional burden upon the public than was already proposed.

The FAA estimates that 776 airplanes in the U.S. registry will be affected by this AD, that it will take approximately 1 workhour per airplane to accomplish the required visual inspection of the upper wing skin on both wings, and that the average labor rate is approximately $60 an hour. Based on these figures, the total cost impact of the AD on U.S. operators is estimated to be $46,560. This figure does not include the cost of any dye penetrant inspections of the rib strap that will be required if the wing skin is found cracked, and it does not include the cost of the repetitive inspections or the optional modification. Incorporating the optional modification terminates the need for the repetitive inspection requirement. The figure above is based upon the assumption that no affected airplane owner/operator has accomplished this inspection-terminating modification.

In addition, the actions required by this AD impose the same cost impact upon U.S. operators as is already required by AD 94–07–10.

The regulations adopted herein will not have substantial direct effects on the States, on the relationship between the national government and the States, or on the distribution of power and responsibilities among the various levels of government. Therefore, in accordance with Executive Order 12612, it is determined that this final rule does not have sufficient federalism implications to warrant the preparation of a Federalism Assessment.

For the reasons discussed above, I certify that this action (1) is not a ''significant regulatory action'' under Executive Order 12866; (2) is not a ''significant rule'' under DOT Regulatory Policies and Procedures (44 FR 11034, February 26, 1979); and (3) will not have a significant economic impact, positive or negative, on a substantial number of small entities under the criteria of the Regulatory Flexibility Act. A copy of the final evaluation prepared for this action is contained in the Rules Docket. A copy of it may be obtained by contacting the Rules Docket at the location provided under the caption **ADDRESSES.**

List of Subjects in 14 CFR Part 39

Air transportation, Aircraft, Aviation safety, Incorporation by reference, Safety.

Adoption of the Amendment

Accordingly, pursuant to the authority delegated to me by the Administrator, the Federal Aviation Administration amends part 39 of the Federal Aviation Regulations (14 CFR part 39) as follows:

PART 39—AIRWORTHINESS DIRECTIVES

1. The authority citation for part 39 continues to read as follows:

Authority: 49 U.S.C. 106(g), 40113, 44701.

§ 39.13 [Amended]

2. Section 39.13, is amended by removing Airworthiness Directive (AD) 94–07–10, Amendment 39–8868 (59 FR 15329; April 1, 1994), and by adding a new AD to read as follows:

94–07–10 R1 Fairchild Aircraft: Amendment 39–9516; Docket No. 93–CE–21–AD. Revises AD 94–07–10, Amendment 39–8868.

Applicability: The following model and serial number airplanes, certificated in any category:

Model	Serial Nos.
SA226–T	T201 through T275, and T277 through T291.
SA226–T(B)	T(B)276, and T(B)292 through T(B)417.
SA226–AT	AT001 through AT074.
SA226–TC	TC201 through TC419.
SA227–TT	TT421 through TT541.
SA227–AT	AT423 through AT631, and AT695.
SA227–AC	AC406, AC415, AC416, and AC420 through AC789.
SA227–BC	BC420 through BC789.
SA227–CC	CC784, and CC790 through CC822.
SA227–DC	DC784, and DC790 through DC822.

Note 1: This AD applies to each airplane identified in the preceding applicability provision, regardless of whether it has been modified, altered, or repaired in the area subject to the requirements of this AD. For airplanes that have been modified, altered, or repaired so that the performance of the requirements of this AD is affected, the owner/operator must request approval for an alternative method of compliance in accordance with paragraph (e) of this AD. The request should include an assessment of the effect of the modification, alteration, or repair on the unsafe condition addressed by this AD; and, if the unsafe condition has not been eliminated, the request should include specific proposed actions to address it.

Compliance: Required initially upon the accumulation of 2,500 hours time-in-service (TIS) or within the next 100 hours TIS after the effective date of this AD, whichever occurs later, unless already accomplished (compliance with AD 94–07–10), and thereafter as indicated in the body of the AD.

To prevent failure of the wing skin at the top aft outboard corner of the battery box, which could result in structural damage to the wing, accomplish the following:

Note 2: The paragraph structure of this AD is as follows:

Level 1: (a), (b), (c), etc.
Level 2: (1), (2), (3), etc.
Level 3: (i), (ii), (iii), etc.

Level 2 and Level 3 structures are designations of the Level 1 paragraph they immediately follow.

(a) Visually inspect the right and left upper wing skin by the top aft outboard corner of the battery box for cracks in accordance with Figure 1 and the ACCOMPLISHMENT INSTRUCTIONS, A. Inspection, section of whichever of the following is applicable:

(1) Fairchild Service Bulletin (SB) 226–57–018, Issued: January 28, 1993, Revised: June 3, 1993 (pages 4 through 11 and 13 through 15), Revised: July 1, 1993 (page 12) and Revised: October 25, 1993 (pages 1 through 3);

(2) Fairchild SB 227–57–005, Issued: December 21, 1992, Revised: June 3, 1993 (pages 2 through 11 and 13 through 15), and Revised: July 1, 1993 (pages 1 and 12); or

(3) Fairchild Aircraft SB CC7–57–002, Issued: January 28, 1993, Revised: June 3, 1993 (pages 2 through 11 and 13 through 15), and Revised: July 1, 1993 (pages 1 and 12).

(b) If cracks are not found during the visual inspection required by paragraph (a) of this AD, within 500 hours TIS after this initial visual inspection, accomplish one of the following:

(1) Reinspect the right and left upper wing skin by the top aft outboard corner of the battery box for cracks in accordance with Figure 1 and the ACCOMPLISHMENT INSTRUCTIONS, A. Inspection, section of the applicable service information presented in paragraphs (a)(1), (a)(2), and (a)(3) of this AD, and reinspect thereafter at intervals not to exceed 500 hours TIS; or

(2) Modify the upper wing skin in accordance with the ACCOMPLISHMENT INSTRUCTIONS, B. Removal and C. Installation, section of the service information referenced in paragraphs (a)(1),

(a)(2), or (a)(3) of this AD, as applicable. Accomplishing this modification terminates the repetitive visual inspections that are specified in paragraph (b)(1) of this AD, and the modification may be accomplished at any time to eliminate this repetitive inspection requirement.

(c) If cracks are found during the inspection required by paragraph (a) of this AD, prior to further flight, dye penetrant inspect the 27–31130 straps in the wheel wells as specified in the ACCOMPLISHMENT INSTRUCTIONS, A. Inspection section, paragraph (1)(b), of the service information referenced in paragraphs (a)(1), (a)(2), or (a)(3) of this AD, as applicable.

(1) If cracks are found in either of the 27–31130 straps during the inspection required by paragraph (c) of this AD, prior to further flight, accomplish the following:

(i) Repair the 27–31130 strap in accordance with a scheme obtained from the manufacturer through the Fort Worth Airplane Certification Office (ACO) at the address specified in paragraph (e) of this AD; and

(ii) Modify the upper wing skin in accordance with the ACCOMPLISHMENT INSTRUCTIONS, B. Removal and C. Installation, section of the service information referenced in paragraphs (a)(1), (a)(2), or (a)(3) of this AD, as applicable.

(2) If no cracks are found in either of the 27–31130 straps, within 150 hours TIS after the initial dye penetrant inspection required by paragraph (c) of this AD, accomplish one of the following:

(i) Reinspect (dye penetrant) the 27–31130 straps in the wheel well for cracks as specified in the ACCOMPLISHMENT INSTRUCTIONS, A. Inspection section, paragraph (1)(b), of the service information referenced in paragraphs (a)(1), (a)(2), or (a)(3) of this AD, as applicable. Continue to reinspect at intervals not to exceed 150 hours TIS provided no cracks are found, and repair and modify as specified in paragraphs (c)(1) and (c)(2) of this AD if any cracks are found.

(ii) Modify the upper wing skin in accordance with the ACCOMPLISHMENT INSTRUCTIONS, B. Removal and C. Installation, section of the service information referenced in paragraphs (a)(1), (a)(2), or (a)(3) of this AD, as applicable. Accomplishing this modification terminates the repetitive dye penetrant inspections that are specified in paragraph (c)(2)(i) of this AD, and the modification may be accomplished at any time to eliminate this repetitive inspection requirement.

Note 3: Certain Limited Approved Repair (LAR) and Approved Repair Procedure (ARP) documents issued by Fairchild Aircraft specify procedures for accomplishing the same modification referenced in paragraphs (b)(2), (c)(1)(ii), and (c)(2)(ii) of this AD. Check with the Fort Worth ACO at the address presented in paragraph (e) of this AD to find out which LAR's and ARP's are considered ''unless already accomplished'' as they relate to this AD.

(d) Special flight permits may be issued in accordance with sections 21.197 and 21.199 of the Federal Aviation Regulations (14 CFR 21.197 and 21.199) to operate the airplane to a location where the requirements of this AD can be accomplished.

(e) An alternative method of compliance or adjustment of the initial or repetitive compliance times that provides an equivalent level of safety may be approved by the Manager, Fort Worth ACO, FAA, 2601 Meacham Boulevard, Fort Worth, Texas 76137–0150. The request shall be forwarded through an appropriate FAA Maintenance Inspector, who may add comments and then send it to the Manager, Fort Worth ACO.

Note 4: Information concerning the existence of approved alternative methods of compliance with this AD, if any, may be obtained from the Fort Worth ACO.

(f) Alternative methods of compliance approved in accordance with AD 94–07–10 (revised by this action) are considered approved as alternative methods of compliance with this AD.

(g) The inspections, possible repair, and optional modification required by this AD shall be done in accordance with Fairchild Service Bulletin 226–57–018, Issued: January 28, 1993, Revised: June 3, 1993 (pages 4 through 11 and 13 through 15), Revised: July 1, 1993 (page 12) and Revised: October 25, 1993 (pages 1 through 3); Fairchild Service Bulletin 227–57–005, Issued: December 21, 1992, Revised: June 3, 1993 (pages 2 through 11 and 13 through 15), and Revised: July 1, 1993 (pages 1 and 12); or Fairchild Aircraft Service Bulletin CC7–57–002, Issued: January 28, 1993, Revised: June 3, 1993 (pages 2 through 11 and 13 through 15), and Revised: July 1, 1993 (pages 1 and 12), as applicable. This incorporation by reference was previously approved by the Director of the Federal Register in accordance with 5 U.S.C. 552(a) and 1 CFR part 51. Copies may be obtained from Fairchild Aircraft, P.O. Box 790490, San Antonio, Texas 78279–0490. Copies may be inspected at the FAA, Central Region, Office of the Assistant Chief Counsel, Room 1558, 601 E. 12th Street, Kansas City, Missouri, or at the Office of the Federal Register, 800 North Capitol Street NW., 7th Floor, suite 700, Washington, DC.

(h) This amendment (39–9516) revises AD 94–07–10, Amendment 39–8868.

(i) This amendment (39–9516) becomes effective on March 25, 1996.

Issued in Kansas City, Missouri, on February 7, 1996.

Michael Gallagher,

Manager, Small Airplane Directorate, Aircraft Certification Service.

[FR Doc. 96–3286 Filed 2–13–96; 8:45 am]

BILLING CODE 4910–13–U

DEPARTMENT OF COMMERCE

Bureau of Export Administration

15 CFR Parts 771, 776, and 799

[Docket No. 960205023–6023–01]

RIN 0694–AA38

Expansion of General License GFW; Editorial Corrections to the Export Administration Regulations

AGENCY: Bureau of Export Administration, Commerce.

ACTION: Final rule.

SUMMARY: This final rule revises the Export Administration Regulations (EAR) by expanding General License GFW eligibility to include certain semiconductor manufacturing equipment controlled under ECCN 3B01A, except a.2., a.3., e. and f. The expansion of General License GFW to include these items is expected to result in a decrease in the number of license applications submitted, thereby reducing the paperwork burden on exporters.

This final rule also makes three editorial corrections to the EAR to correct inconsistencies which appeared in an interim rule titled ''Revisions to the Export Administration Regulations: Reform of Computer Export Controls; Establishment of General License G-CTP'', which was published in the Federal Register on January 25, 1996.

EFFECTIVE DATE: This rule is effective February 14, 1996.

FOR FURTHER INFORMATION CONTACT: For questions of a general nature, call Nancy Crowe, Bureau of Export Administration, Regulatory Policy Division, Telephone: (202) 482–2440.

For questions of a technical nature call Jerry Beiter, Bureau of Export Administration, Telephone: (202) 482–6105.

SUPPLEMENTARY INFORMATION:

Background

This rule expands GFW eligibility to include semiconductor manufacturing equipment controlled under ECCN 3B01A, except a.2. (metal organic chemical vapour deposition reactors), a.3. (molecular beam epitaxial growth equipment using gas sources), e. (automatic loading multi-chamber central wafer handling systems *only* if connected to equipment controlled by a.2., a.3., and f.), and f. (lithography equipment).

General License GFW is eligible for exports of certain commodities subject to national security controls. Shipments of eligible commodities may be made to

any destination in Country Groups T or V, except the People's Republic of China (PRC), Iran and Syria, subject to the provisions of § 771.23 of the EAR and the prohibitions on General License shipments contained in § 771.2(c) of the EAR.

This final rule also makes three editorial corrections to the EAR to correct inconsistencies that appeared in an interim rule titled ''Revisions to the Export Administration Regulations: Reform of Computer Export Controls; Establishment of General License G-CTP'', which was published in the Federal Register on January 25, 1996 (61 FR 2099). This final rule revises § 771.28(a) by revising the phrase ''equipment performing analog-to-digital or digital-to-analog conversions'' to read ''equipment performing analog-to-digital conversions''. This change will conform § 771.28(a) with the controls under ECCN 4A03.e on the CCL. This rule revises §§ 771.28(d)(1) and 776.19(f)(1) by removing ''Laos'' from the list of countries in Tier 3. Laos appeared in both Tier 2 and Tier 3 in the January 25 rule. With the changes in this rule, Laos will correctly be retained in Tier 2.

Although the Export Administration Act (EAA) expired on August 20, 1994, the President invoked the International Emergency Economic Powers Act and continued in effect, to the extent permitted by law, the provisions of the EAA and the EAR in Executive Order 12924 of August 19, 1994, and notice of August 15, 1995 (60 FR 42676).

Rulemaking Requirements

1. This final rule has been determined to be not significant for the purposes of Executive Order 12866.

2. Notwithstanding any other provision of law, no person is required to respond to nor shall a person be subject to a penalty for failure to comply with a collection of information subject to the requirements of the Paperwork Reduction Act unless that collection of information displays a currently valid OMB Control Number. This rule involves collections of information subject to the Paperwork Reduction Act of 1980 (44 U.S.C. 3501 *et seq.*). These collections have been approved by the Office of Management and Budget under control numbers 0694–0005, 0694–0007, 0694–0010, 0694–0013, and 0694–0073.

3. This rule does not contain policies with Federalism implications sufficient to warrant preparation of a Federalism assessment under Executive Order 12612.

4. Because a notice of proposed rulemaking and an opportunity for public comment are not required to be given for this rule by the Administrative Procedure Act (5 U.S.C. 553) or by any other law, under sections 3(a) of the Regulatory Flexibility Act (5 U.S.C. 603(a) and 604(a)) no initial or final Regulatory Flexibility Analysis has to be or will be prepared.

5. The provisions of the Administrative Procedure Act (5 U.S.C. 553) requiring notice of proposed rulemaking, the opportunity for public participation, and a delay in effective date, are inapplicable because this regulation involves a military and foreign affairs function of the United States. Further, no other law requires that a notice of proposed rulemaking and an opportunity for public comment be given for this rule.

List of Subjects in 15 CFR Parts 771, 776, and 799

Exports, Reporting and recordkeeping requirements.

Accordingly, Parts 771, 776, and 799 of the Export Administration Regulations (15 CFR Parts 730–799) are amended as follows:

1. The authority citations for 15 CFR Parts 771 and 799 continue to read as follows:

Authority: 50 U.S.C. App. 5, as amended; Pub. L. 264, 59 Stat. 619 (22 U.S.C. 287c), as amended; Pub. L. 90–351, 82 Stat. 197 (18 U.S.C. 2510 *et seq.*), as amended; sec. 101, Pub. L. 93–153, 87 Stat. 576 (30 U.S.C. 185), as amended; sec. 103, Pub. L. 94–163, 89 Stat. 877 (42 U.S.C. 6212), as amended; secs. 201 and 201(11)(e), Pub. L. 94–258, 90 Stat. 309 (10 U.S.C. 7420 and 7430(e)), as amended; Pub. L. 95–223, 91 Stat. 1626 (50 U.S.C. 1701 *et seq.*); Pub. L. 95–242, 92 Stat. 120 (22 U.S.C. 3201 *et seq.* and 42 U.S.C. 2139a); sec. 208, Pub. L. 95–372, 92 Stat. 668 (43 U.S.C. 1354); Pub. L. 96–72, 93 Stat. 503 (50 U.S.C. App. 2401 *et seq.*), as amended; sec. 125, Pub. L. 99–64, 99 Stat. 156 (46 U.S.C. 466c); Pub. L. 102–484, 106 Stat. 2575 (22 U.S.C. 6004); E.O. 11912 of April 13, 1976 (41 FR 15825, April 15, 1976); E.O. 12002 of July 7, 1977 (42 FR 35623, July 7, 1977), as amended; E.O. 12058 of May 11, 1978 (43 FR 20947, May 16, 1978); E.O. 12214 of May 2, 1980 (45 FR 29783, May 6, 1980); E.O. 12851 of June 11, 1993 (58 FR 33181, June 15, 1993); E.O. 12867 of September 30, 1993 (58 FR 51747, October 4, 1993); E.O 12918 of May 26, 1994 (59 FR 28205, May 31, 1994); E.O. 12924 of August 19, 1994 (59 FR 43437 of August 23, 1994); notice of August 15, 1995 (60 FR 42767); and E.O. 12938 of November 14, 1994 (59 FR 59099 of November 16, 1994).

2. The authority citation for 15 CFR Part 776 continues to read as follows:

Authority: Pub. L. 90–351, 82 Stat. 197 (18 U.S.C. 2510 *et seq.*), as amended; Pub. L. 95–223, 91 Stat. 1626 (50 U.S.C. 1701 *et seq.*); Pub. L. 95–242, 92 Stat. 120 (22 U.S.C. 3201 *et seq.* and 42 U.S.C. 2139a); Pub. L. 96–72, 93 Stat. 503 (50 U.S.C. App. 2401 *et seq.*), as amended; sec. 125, Pub. L. 99–64, 99 Stat. 156 (46 U.S.C. 466c); E.O. 12002 of July 7, 1977 (42 FR 35623, July 7, 1977), as amended; E.O. 12058 of May 11, 1978 (43 FR 20947, May 16, 1978); E.O. 12214 of May 2, 1980 (45 FR 29783, May 6, 1980); E.O. 12867 of September 30, 1993 (58 FR 51747 of October 4, 1993); E.O. 12924 of August 19, 1994 (59 FR 43437, August 23, 1994); notice of August 15, 1995 (60 FR 42767); and E.O. 12938 of November 14, 1994 (59 FR 59099 of November 16, 1994).

PART 771—[AMENDED]

§ 771.28 [Amended]

3. In § 771.28(a), the second sentence is amended by revising the phrase ''equipment performing analog-to-digital or digital-to-analog conversions'' to read ''equipment performing analog-to-digital conversions''.

4. Section 771.28(d)(1) is amended by removing ''Laos,'' from the list of countries.

PART 776—[AMENDED]

§ 776.10 [Amended]

5. Section 776.10(f)(1) is amended by removing ''Laos,'' from the list of countries.

PART 799—[AMENDED]

Supplement No. 1 to § 799.1 [Amended]

6. In Supplement No. 1 to § 799.1, Category 3 (Electronics Design, Development and Production), ECCN 3B01A is amended by revising the heading and the Requirements section to read as follows:

3B01A Equipment for the manufacture or testing of semiconductor devices or materials, as follows, and specially designed components and accessories therefor.

Requirements

Validated License Required: QSTVWYZ
Unit: Number
Reason for Control: NS
GLV: $500
GCT: Yes
GFW: Yes, *except* a.2, a.3, e. (only if connected to equipment controlled by a.2., a.3., and f.), and f.

* * * * *

Dated: February 8, 1996.

Sue E. Eckert,

Assistant Secretary for Export Administration.

[FR Doc. 96–3201 Filed 2–13–96; 8:45 am]

BILLING CODE 3510–DT–P

FEDERAL TRADE COMMISSION

16 CFR Part 305

Rule Concerning Disclosures Regarding Energy Consumption and Water Use of Certain Home Appliances and Other Products Required Under the Energy Policy and Conservation Act (''Appliance Labeling Rule'')

AGENCY: Federal Trade Commission.

ACTION: Final rule revision.

SUMMARY: The Federal Trade Commission's Appliance Labeling Rule requires that Table 1, in § 305.9, which sets forth the representative average unit energy costs for five residential energy sources, be revised periodically on the basis of updated information provided by the Department of Energy (''DOE'').

This document revises the table to incorporate the latest figures for average unit energy costs as published by DOE in the Federal Register on January 19, 1996.[1]

DATES: The revisions to § 305.9(a) and Table 1 are effective March 15, 1996. The mandatory dates for using these revised DOE cost figures in connection with the Appliance Labeling Rule are detailed in the Supplementary Information Section, below.

FOR FURTHER INFORMATION CONTACT: James Mills, Attorney, 202–326–3035 Division of Enforcement, Federal Trade Commission, Washington, DC 20580.

SUPPLEMENTARY INFORMATION: On November 19, 1979, the Federal Trade Commission issued a final rule in response to a directive in section 324 of the Energy Policy and Conservation Act (''EPCA''), 42 U.S.C. 6201.[2] The rule requires the disclosure of energy efficiency, consumption, or cost information on labels and in retail sales catalogs for eight categories of appliances, and mandates that the energy costs, consumption, or efficiency ratings be based on standardized test procedures developed by DOE. The cost information obtained by following the test procedures is derived by using the representative average unit energy costs provided by DOE. Table 1 in § 305.9(a) of the rule sets forth the representative average unit energy costs to be used for all cost-related requirements of the rule. As stated in § 305.9(b), the Table is to be revised periodically on the basis of updated information provided by DOE.

On January 19, 1996, DOE published the most recent figures for representative average unit energy costs. Accordingly, Table 1 is revised to reflect these latest cost figures as set forth below.

The dates when use of the figures in revised Table 1 becomes mandatory in calculating cost disclosures for use in labeling and catalog sales of products covered by the Commission's rule and/or EPCA are as follows:

For 1996 Submissions of Data Under Section 305.8 of the Commission's Rule: Manufacturers no longer need to use the DOE cost figures in complying with the data submission requirements of section 305.8 of the rule. Pursuant to amendments to the rule published on July 1, 1994[3] (with extended compliance dates published on December 8, 1994),[4] the estimated annual operating cost is no longer the primary energy usage descriptor for refrigerators, refrigerator-freezers, freezers, clothes washers, dishwashers, and water heaters. Under the amendments, the energy usage and the ranges of comparability for those product categories must be expressed in terms of estimated annual energy consumption (kilowatt-hour use per year for electricity, therms per year for natural gas, or gallons per year for propane and oil). Thus, the 1996 (and all subsequent) data submissions under section 305.8 for these product categories (which are to enable the Commission to publish ranges of comparability) must be made in terms of estimated annual energy consumption, for the determination of which the DOE cost figures are unnecessary. The 1996 (and all subsequent) submissions also must be made in terms of the new product sub-categories created by the above-mentioned amendments. The energy efficiency energy usage descriptors for the other products covered by the rule (room air conditioners, furnaces, boilers, central air conditioners, heat pumps, and pool heaters) are unaffected by the amendments mentioned above. The annual data submission requirements for those products, which are not based on the DOE cost figures, will continue to be in terms of energy efficiency (although submissions for room air conditioners, furnaces, and boilers must be made in terms of the new product sub-categories created by the amendments). For convenience, the annual dates for data submission are repeated here:

Fluorescent lamp ballasts: March 1
Clothes washers: March 1
Water heaters: May 1
Furnaces: May 1
Room air conditioners: May 1
Pool Heaters: May 1
Dishwashers: June 1
Central air conditioners: July 1
Heat pumps: July 1
Refrigerators: August 1
Refrigerator-freezers: August 1
Freezers: August 1

For Labeling and Catalog Sales of Products Covered by the Commission's Rule: The July 1, 1994, amendments require that labels for refrigerators, refrigerator-freezers, freezers, clothes washers, dishwashers, water heaters, and room air conditioners contain a secondary energy usage disclosure in terms of an estimated annual operating cost (labels for clothes washers and dishwashers will show two such secondary disclosures—one based on operation with water heated by natural gas, and one on operation with water heated by electricity). The labels must also disclose, below the secondary estimated annual operating cost disclosure, the fact that the estimated annual operating cost is based on the appropriate DOE energy cost figure and identify the year in which the cost figure was published.[5] Manufacturers of refrigerators, refrigerator-freezers, freezers, clothes washers, dishwashers, and room air conditioners began making these disclosures on the labels required by the amendments and in catalogs beginning ninety days after the Commission published new energy consumption ranges of comparability based on the 1995 submissions required by § 305.8. They must continue to use the 1995 DOE cost figures until the Commission publishes new ranges of comparability based on future annual submissions of estimated annual energy consumption data. At that time, these manufacturers must use the then-current DOE energy cost figures when they prepare new labels in response to the new energy consumption ranges of comparability. When such new ranges are published, the effective date for

[1] 61 FR 1366.

[2] 44 FR 66466. since its promulgation, the rule has been amended four times to include new product categories—central air conditioners (52 FR 46888, Dec. 10, 1987), fluorescent lamp ballasts (54 FR 1182, Jan. 12, 1989), certain plumbing products (58 FR 54955, Oct. 25, 1993), and certain lamp products (59 FR 25176, May 13, 1994). Obligations under the rule concerning fluorescent lamp ballasts, lighting products, and plumbing products are not affected by the cost figures in this notice.

[3] 59 FR 34014.

[4] 59 FR 63688.

[5] The secondary estimated annual operating cost disclosures on the initial group of revised labels for storage-type water heaters are based on the 1994 DOE cost figures that were published by the Commission on February 8, 1994 (59 FR 5699). The secondary estimated annual operating cost disclosures on the initial group of revised labels for refrigerators, refrigerator-freezers, clothes washers, dishwashers, and room air conditioners are (or will be) based on the 1995 DOE cost figures that were published by the Commission on February 17, 1995 (60 FR 9295).

labeling new products will be ninety days after the publication of the ranges in the Federal Register. Similarly, manufacturers of storage-type water heaters, who began to comply with the amendments in 1994, used the 1994 DOE cost figures in determining the secondary energy use disclosures on the labels on their products. They must continue to use 1994 cost figures to calculate these estimated annual operating cost figures on their labels until the Commission publishes new ranges of comparability for those products. As in the past, products that have been properly labeled prior to the effective date of any range modification need not be relabeled.

For Energy Cost Representations Respecting Products Covered by EPCA but not by the Commission's Rule: Manufacturers of products covered by section 323(c) of EPCA, 42 U.S.C. 6293(c), but not by the Appliance Labeling Rule (clothes dryers, television sets, kitchen ranges and ovens, and space heaters) must use the 1996 representative average unit costs for energy in all operating cost representations beginning May 14, 1996.

List of Subjects in 16 CFR Part 305

Advertising, Energy conservation, Household appliances, Labeling, Reporting and recordkeeping requirements.

PART 305—[AMENDED]

Accordingly, 16 CFR Part 305 is amended as follows:

1. The authority citation for Part 305 continues to read as follows:

Authority: 42 U.S.C. 6294.

Section 305.9(a) is revised to read as follows:

§ 305.9 Representative average unit energy costs.

(a) Table 1, below, contains the representative unit energy costs to be utilized for all requirements of this part.

TABLE 1.—REPRESENTATIVE AVERAGE UNIT COSTS OF ENERGY FOR FIVE RESIDENTIAL ENERGY SOURCES (1996)

Type of energy	In commonly used terms	As required by DOE test procedure	Dollars per million Btu [1]
Electricity	8.6¢/kWh [2] [3]	$0.086/kWh	$25.21
Natural Gas	62.6¢/therm [4] or $6.43/MCF [5] [6]	0.000006626/Btu	6.26
No. 2 heating oil	.92/gallon [7]	0.00000663/Btu	6.63
Propane	0.90/gallon [8]	0.00000984/Btu	9.84
Kerosene	1.00/gallon [9]	0.00000739/Btu	7.39

[1] Btu stands for British thermal unit.
[2] kWh stands for kilowatt hour.
[3] 1 kWh=3,412 Btu.
[4] 1 therm=100,000 Btu. Natural gas prices include taxes.
[5] MCF stands for 1,000 cubic feet.
[6] For the purposes of this table, 1 cubic foot of natural gas has an energy equivalence of 1,027 Btu.
[7] For the purposes of this table, 1 gallon of No. 2 heating oil has an energy equivalence of 138,690 Btu.
[8] For the purposes of this table, 1 gallon of liquid propane has an energy equivalence of 91,333 Btu.
[9] For the purposes of this table, 1 gallon of kerosene has an energy equivalence of 135,000 Btu.

Donald S. Clark,

Secretary.

[FR Doc. 96–3263 Filed 2–13–96; 8:45 am]

BILLING CODE 6750–01–M

DEPARTMENT OF TRANSPORTATION

Coast Guard

33 CFR Part 100

[CGD 09–95–029]

Special Local Regulations; Great Lakes Annual Marine Events

AGENCY: Coast Guard, DOT.

ACTION: Final rule.

SUMMARY: The Coast Guard is revising its list of annual marine events which occur within the Ninth Coast Guard District. Publication of this list in part 100 of the Code of Federal Regulations will establish permanent special local regulations for marine events within the Ninth Coast Guard District which recur on an annual basis and which have been determined by the District Commander to require the issuance of special local regulations. This action is being taken to ensure the safety of life, limb and property during each event, while avoiding the necessity of publishing a separate temporary regulation each year for each event. The list reflects the approximate dates and locations of each annual marine event.

DATE: This rule is effective February 14, 1996.

FOR FURTHER INFORMATION CONTACT: Marine Science Technician Second Class Jeffrey M. Yunker, Ninth Coast Guard District, Aids to Navigation Branch, 1240 East Ninth Street, Cleveland, Ohio, 44199–2060, (216) 522–3990.

SUPPLEMENTARY INFORMATION:

Drafting Information

The drafters of these regulations are Lieutenant Junior Grade Byron D. Willeford, Project Officer, Ninth Coast Guard District, Aids to Navigation Branch and Lieutenant Commander Michael Zack, Project Attorney, Ninth Coast Guard District Legal Office.

Regulatory History

On November 1, 1995, the Coast Guard published a notice of proposed rulemaking entitled Special Local Regulations; Great Lakes Annual Marine Events in the Federal Register (60 FR 55511). The deadline for the submission of comments was December 18, 1995. The Coast Guard received no letters commenting on the proposal. A public hearing was not requested and one was not held. The Commander Ninth Coast Guard District has decided to publish the final rule as proposed.

Background and Purpose

This rulemaking updates an existing list of anticipated annual events. Each year various public and private organizations sponsor marine events on the navigable waters of the United States within the Ninth Coast Guard District. These events include slow moving boat parades, sailboat races, high speed hydroplane races, fireworks displays, and other water related events. The listed events are held in approximately the same location during the same general period of time each year. Exact times and dates will be published in the Local Notice to Mariners instead of being published in this final rule. This will streamline the marine event process for those regattas

and marine events that have very little annual variation and will significantly reduce the Coast Guard's administrative burden for managing these type of events with no reduction in services to the maritime community. The nature of each event is such that special local regulations are deemed necessary to ensure the safety of life, limb, and property on and adjacent to navigable waters during the events. Group Commanders have consulted and will continue to consult with parties potentially affected by any significant changes to the nature, date, time, and location proposed by an event sponsor for any of the events covered in this rule.

Table 1 gives the approximate dates, times, and locations for the annual events listed. Each year, one or more Local Notice to Mariners will be published giving the exact dates, times, and locations for the annual events. It should be noted that Table 1 in the regulation is not a complete list of all marine events that will occur in the Ninth Coast Guard District. It does not include events which do not require special local regulations for the safety of life, limb, and property on or adjacent to navigable waters. It also does not include nonannual events or events which have not been scheduled in time for this publication.

Federalism Implications

This action has been analyzed in accordance with the principles and criteria contained in Executive Order 12612, and it has been determined that the rulemaking does not have sufficient federalism implications to warrant the preparation of a Federalism Assessment.

Environment

The Coast Guard is simply proposing to revise its list of annual marine events. The listing itself will not affect the environment. Upon receipt of applications, the Coast Guard will conduct an environmental analysis for each event in accordance with section 2.B.2.c of Coast Guard Commandant Instruction M16475.1B, and the Coast Guard Notice of final agency procedures and policy for categorical exclusions found at 59 FR 38654 (July 29, 1994).

Economic Assessment and Certification

These regulations are not a significant regulatory action under section 3(f) of Executive Order 12866 and do not require an assessment of potential costs and benefits under section 6(a)(3) of that order. They have been exempted from review by the Office of Management and Budget under that order. They are not significant under the regulatory policies and procedures of the Department of Transportation (DOT) (44 FR 11040; February 26, 1979). The Coast Guard expects the economic impact of these regulations to be so minimal that a full Regulatory Evaluation under paragraph 10e of the regulatory policies and procedures of the DOT is unnecessary.

Collection of Information

These regulations will impose no collection information requirements under the Paperwork Reduction Act, 44 U.S.C. 3501 et seq.

List of Subjects in 33 CFR Part 100

Marine safety, Navigation (water), Reporting and recordkeeping requirements, Waterways.

Final Regulations

In consideration of the foregoing, the Coast Guard is amending Part 100 of Title 33, Code of Federal Regulations, as follows:

1. The authority citation for Part 100 continues to read as follows:

Authority: 33 U.S.C. 1233; 49 CFR 1.46 and 33 CFR 100.35.

2. Section 100.901 is amended by revising Table 1 to read as follows:

§ 100.901 Great Lakes Annual Marine Events.

* * * * *

Table 1

Group Buffalo, NY:

Fireworks by Grucci

Sponsor: New York Power Authority.
Date: Last weekend of July.
Location: Lake Ontario, Wright's Landing/Oswego Harbor, NY within an 800 foot radius of the fireworks launching platform located in approximate position 43°28′10″ N 076°31′04″ W.

Flagship International Kilo Speed Challenge

Sponsor: Presque Isle Powerboat Racing Association.
Date: 3rd or 4th weekend of June.
Location: That portion of Lake Erie, Presque Isle Bay, south of a line drawn from 42°08′54″ N 080°05′42″ W; to 42°07′ N 080°21′ W will be a regulated area. That portion of Lake Erie, Presque Isle bay, north of a line drawn from 42°08′54″ N 080°05′42″ W; to 42°07′ N 080°21′ W will be a ''caution area''. All vessels transiting the caution area will be operated at bare steerageway, keeping the vessel's wake at a minimum, and will exercise a high degree of caution in the area. The bay entrance will not be effected.

Flagship International Offshore Challenge

Sponsor: Presque Isle Powerboat Racing Association.
Date: 3rd or 4th weekend of June.
Location: That portion of Lake Erie, Presque Isle Bay, Entrance Channel, and the enclosed area from Erie Harbor Pier Head Light (LLNR 3430) northeast to 42°12′48″ N 079°57′24″ W, thence south to shore just east of Shades Beach.

Friendship Festival Airshow

Sponsor: Friendship Festival
Date: 4th of July holiday.
Location: That portion of the Niagara River and Buffalo.
Harbor from:

Latitude	Longitude
42°54.4′ N	078°54.1′ W, thence to
42°54.4′ N	078°54.4′ W, thence along the International Border to
42°52.9′ N	078°54.9′ W, thence to
42°52.5′ N	078°54.3′ W, thence to
42°52.7′ N	078°53.9′ W, thence to
42°52.8′ N	078°53.8′ W, thence to
42°53.1′ N	078°53.6′ W, thence to
42°53.2′ N	078°53.6′ W, thence to
42°53.3′ N	078°53.7′ W, thence along the breakwall to
42°54.4′ N	078°54.1′ W.

Geneva Offshore Grand Prix

Sponsor: Great Lakes Offshore Powerboat Racing Association.
Date: 3rd or 4th weekend of May.
Location: That portion of Lake Erie from:

Latitude	Longitude
41°51.5′ N	080°58.2′ W, thence to
41°52.4′ N	080°53.4′ W, thence to
41°53′ N	080°53.4′ W, thence to
41°52.2′ N	080°58.2′ W, thence to
41°51.5′ N	080°58.2′ W.

NFBRA Red Dog Kilo Time Trials

Sponsor: Niagara Frontier Boat Racing Association.
Date: 4th or 5th weekend of September.
Location: That portion of the Niagara River, Tonawanda Channel, between Tonawanda Channel Buoy 31 to approximately ½ mile southwest of Twomile Creek along a line drawn from 43°00′45″ N 078°55′06″ W to 43°00′28″ N 078°54′56″ W (Sipco Oil Company).

Offshore Series Grand Prix

Sponsor: Great Lakes Offshore Powerboat Racing Assn.
Date: 2nd or 3rd weekend of September.
Location: That portion of Lake Erie from:

Latitude	Longitude
41°51.5′ N	080°58.2′ W, thence to
41°52.4′ N	080°53.4′ W, thence to
41°53.0′ N	080°53.4′ W, thence to
41°52.2′ N	080°58.2′ W, thence to
41°51.5′ N	080°58.2′ W.

Sodus Bay 4th of July Fireworks

Sponsor: Sodus Bay Historical Society.

Date: 4th of July holiday.

Location: Lake Ontario, within a 500 foot radius around a barge anchored in approximate position 43°15.73′ N 076°58.23′ W, in Sodus Bay.

Tallship Erie

Sponsor: Erie Maritime Programs, Inc.

Date: 1st or 2nd weekend of July.

Location: That portion of Lake Erie, Presque Isle Bay

Entrance Channel and Presque Isle Bay from:

Latitude	Longitude
42°10′ N	080°03′ W, thence to
42°08.1′ N	080°07′ W, thence to
42°07.9′ N	080°06.8′ W, thence
east along the shoreline and structures to:	
42°09.2′ N	080°02.6′ W, thence to
42°10′ N	080°03′ W.

Thomas Graves Memorial Fireworks Display

Sponsor: Port Bay Improvement Association.

Date: 1st or 2nd weekend of July.

Location: That portion of Lake Ontario, Port Bay Harbor, NY within a 500 ft radius surrounding a barge anchored in approximate position 43°17′46″ N 076°50′02″ W.

Thunder Island Offshore Challenge

Sponsor: Thunder on the Water Inc.

Date: 3rd or 4th weekend of June.

Location: That portion of Lake Ontario, Oswego Harbor from the West Pier Head Light (LLNR 2080) north to:

Latitude	Longitude
43°29′02″ N ...	076°32′04″ W, thence to
43°26′18″ N ...	076°39′30″ W, thence to
43°24′55″ N ...	076°37′45″ W, thence
along the shoreline to the West Pier Head Light (LLNR 2080).	

We Love Erie Days Fireworks

Sponsor: We Love Erie Days Festival, Inc.

Date: 3rd weekend of August.

Location: That portion of Lake Erie, Erie Harbor, within a 300 foot radius, surrounding the Erie Sand and Gravel Pier, located in position 42°08′16″ N 080°05′40″ W.

Group Detroit, MI:

Bay City Fireworks Display

Sponsor: Bay City Fraternal Order of Police, Lodge 103.

Date: 4th of July holidy.

Location: Saginaw River, from the Veterans Memorial Bridge to approximately 1000 yards south to the River Walk Pier, near Bay City, MI.

Detroit APBA Gold Cup Race

Sponsor: Spirit of Detroit Association.

Date: 1st or 2nd weekend of June.

Location: Detroit River, between Belle Isle and the U.S. shoreline, near Detroit, MI. Bound on the west by the Belle Isle Bridge and on the east by a north-south line drawn through the Waterworks Intake Crib Light (LLNR 1022).

Buick Watersports Weekend

Sponsor: Adore Ltd. and APBA.

Date: 3rd or 4th weekend of July.

Location: That portion of the Saginaw River from the Liberty Bridge on the north to the Veterans Memorial Bridge on the south, near Bay City, MI

Cleveland Charity Classic

Sponsor: Lake Erie Offshore Racing, Ltd.

Date: 3rd or 4th weekend of July.

Location: That portion of Lake Erie, Cleveland Harbor from the Cleveland Waterworks Intake Crib Light (LLNR 4030) to:

Latitute	Longitude
41°30.7′ N	081°43.1′ W (West Pierhead Light, LLNR 4160), thence along the breakwater to,
41°30.4′ N	081°42.9′ W (West Breakwater Light, LLNR 4175), thence to,
41°30.2′ N	081°42.8′ W (West Pier Light, LLNR 4185), thence along the shoreline and structures to,
41°32.5′ N	081°38.3′ W (Disposal Light B, LLNR 4045). thence to.
41°33′ N	081°45′ W (Cleveland Waterwork Intake Crib Light LLNR 4030).

Cleveland National Air Show

Sponsor: Cleveland National Air Show.

Date: Labor Day Weekend.

Location: That portion of Lake Erie and Cleveland Harbor (near Burke Lakefront Airport) from a line running perpendicular from Dock No. 34 on the west, to 2000 feet north of the breakwater, then parallel to the breakwater, to a line running perpendicular from the east end of the Burke Lakefront Airport land fill.

Cleveland Offshore Grand Prix

Sponsor: Great Lakes Offshore Powerboat Racing Assn.

Date: 1st or 2nd weekend of August.

Location: That portion of Lake Erie, Cleveland Harbor from the Cleveland Waterworks Intake Crib Light to:

Latitute	Longitude
41°30.7′ N	081°43.1′ W (West Pierhead Light, LLNR 4160), thence along the breakwater to,
41°30.4′ N	081°42.9′ W (West Breakwater Light, LLNR 4175), thence to,
41°30.2′ N	081°42.8) W (West Pier Light, LLNR 4185), thence along the shoreline and structures to,
41°32.5′ N	081°38.3′ W (Disposal Light B, LLNR 4045). thence to,
41°33′ N	081°45′ W (Cleveland Waterworks Intake Crib Light LLNR 4030).

Flatsfest

Sponsor: Flats Riverfest Corporation.

Date: 3rd or 4th weekend of July.

Location: Cuyahoga River, Conrail Railroad Bridge at Mile 0.8 above the mouth of the river to the Eagle Avenue Bridge, near Cleveland, OH.

International Bay City River Roar

Sponsor: Bay City River Roar, Inc.

Date: 3rd or 4th weekend of June.

Location: That portion of the Saginaw River from the Liberty Bridge on the north to the Veterans Memorial Bridge on the south, near Bay City, MI.

International Freedom Festival Fireworks

Sponsor: Detroit Renaissance Foundation.

Date: 3rd or 4th week of June.

Location: The Detroit River between 083°03′ W (Cobo Hall) and 083°01′27″ W (Huron Cement).

International Freedom Festival Tug Across the River

Sponsor: Detroit Renaissance Foundation.

Date: 3rd or 4th week of June.

Location: That portion of the Detroit River bounded on the south by the International Boundary, on the west by 083°03′ W, on the east by 083°02′ W, and on the north by the U.S. shoreline.

Port Clinton Offshore Grand Prix

Sponsor: Great Lakes Offshore Powerboat Racing Association.

Date: 1st or 2nd weekend of July.

Location: That portion of western Lake Erie:

Latitute	Longitude
41°31.2′ N	082°56.1′ W, thence
along the shoreline and structures to	
41°33.3′ N	082°51.3′ W, thence to
41°33.3′ N	082°52.8′ W, thence to
41°31.2′ N	082°56.1′ W.

Port Huron to Mackinac Island Race

Sponsor: Bayview Yacht Club.
Date: 2nd or 3rd weekend of July.
Location: That portion of the Black River, St. Clair River, and Lower Lake Huron from:

Latitute	Longitude
42°58.8′ N	082°26′ W, to
42°58.4′ N	082° 24.8′ W, thence northward along the International Boundary to
43° 02.8′ N	082°23.8′ W, to
43° 02.8′ N	082°26.8′ W, thence southward along the U.S. shoreline to
42°58.9′ N	082°26′ W, thence to
42° 58.8′ N	082° 26′W.

Thunder on the River Hydroplane Race

Sponsor: Toledo Prop Spinners.
Date: 3rd or 4th weekend of August.
Location: Maumee River, between the Martin Luther King and Anthony Wayne bridges, near Toledo, OH.

Toledo 4th of July Fireworks

Sponsor: City of Toledo.
Date: 4th of July weekend.
Location: Maumee River, between the Martin Luther King and Anthony Wayne bridges, near Toledo, OH.

Toledo Labor Day Fireworks

Sponsor: Reams Broadcasting Corporation.
Date: Labor Day.
Location: Maumee River, between the Martin Luther King and Anthony Wayne bridges, near Toledo, OH.

Group Sault Ste. Marie, MI:

Bridgefest Regatta

Sponsor: Bridgefest Committee.
Date: 2nd weekend of June.
Location: Keweenaw Waterway, from the Houghton Hancock Lift Bridge to 1000 yards west of the bridge, near Houghton, MI.

Duluth Fourth Fest Fireworks

Sponsor: Office of the Mayor, Duluth, MN.
Date: 4th of July weekend.
Location: That portion of the Duluth Harbor Basin Northern Section bounded on the south by a line drawn on a bearing of 087° true from the Cargill Pier through Duluth Basin Lighted Buoy #5 (LLNR 15905) to the opposite shore on the north by the Duluth Aerial Bridge. That portion of Duluth Harbor Basin Northern Section within 600 yards of position 46°46′47″ N 092°06′10″ W.

July 4th Fireworks

Sponsor: City of Sault Ste Marie, MI.
Date: 4th of July weekend.
Location: That portion of the St. Marys River, Sault Ste. Marie, MI within a 1000 foot radius of Brady Park, located on the south shore of the river. These waters are enclosed by the Locks to the west and to the east from a line drawn from the pier light of the east center pier to the U.S. Coast Guard Base to the southeast.

National Cherry Festival Blue Angels Air Demonstration

Sponsor: National Cherry Festival Inc.
Date: 1st week of July.
Location: That portion of the Western arm of the Grand Traverse Bay, Traverse City, MI, enclosed by straight lines connecting the following geographic coordinates:

Latitude	Longitude
44°46.8′ N	085°38.3′ W, to
44°46.5′ N	085°35.5′ W, to
44°46′ N	085°35.8′ W, to
44°46.5′ N	085°38.5′ W, thence to
44°46.8′ N	085°38.3′ W.

Venetian Festival Yacht Parade

Sponsor: Charlevoix Chamber of Commerce.
Date: 3rd or 4th weekend of July.
Location: That portion of the upper and lower section of the Pine River, to include Round Lake, from:

Latitude	Longitude
45°19.3′ N	085°15.9′ W, (North Pierhead Light, LLNR 17920) thence to,
45°18.9′ N	085°14.7′ W, (Pine River Light 3, LLNR 17945) thence to,
45°18.8′ N	085°14.7′ W, (Pine River Channel Lighted Buoy 2, LLNR 17950) thence to,
45°19′ N	085°15.9′ W, (South Pierhead Light, LLNR 17925) thence to,
45°19.3′ N	085°15.9′ W.

Group Grand Haven, MI:

City Fireworks

Sponsor: City of Frankfort, MI.
Date: 4th of July Holiday.
Location: Lake Michigan, Frankfort, MI within a 1000 foot radius of the fireworks launching site located on Lake Michigan Beach in approximate position 44°38′ N 086°14′50″ W.

Coast Guard Festival Fireworks

Sponsor: Grand Haven Coast Guard Festival, Inc.
Date: 1st weekend of August.
Location: That portion of the Grand River, Grand Haven, MI, from a north-south line drawn from the North Pierhead Light Number 1 (LLNR 18045) on the north to the South Pierhead Entrance Light (LLNR 18035) on the south, thence down river to the US 31 Bascule Bridge (mile 2.89).

4th of July Fireworks

Sponsor: WSJM & WIRX RADIO.
Date: 4th of July Holiday.
Location: St. Joseph River, within a 1000 foot radius of the fireworks launching site, located at the St. Joseph South Pier, in approximate position 42°06′48″ N 086°29′15″ W.

Grand Haven Area Jaycees Annual 4th of July Fireworks Display

Sponsor: Grand Haven Area Jaycees.
Date: 1st week of July.
Location: That portion of the Grand River, Grand Haven, MI from the pier heads (mile 0.0) to the US 31 Bascule Bridge (mile 2.89).

Holland Jaycees Fireworks

Sponsor: Holland Jaycees
Date: 4th of July Holiday
Location: The portion of Lake Michigan, Holland, MI within a 1000 foot radius of the fireworks launching site, located in Kollen Park, in approximate position 42°47′20″ N 086°07′12″ W.

Ludington Area Jaycees Freedom Festival Fireworks

Sponsor: Ludington Area Jaycees.
Date: 4th of July Holiday.
Location: Lake Michigan, Ludington Harbor, MI, within a 1000 foot radius of the fireworks launching site located at the Loomis Street Boat Launch, in approximate position 43°57′16″ N 086°27′42″ W.

Muskegon Summer Celebration Fireworks

Sponsor: The Muskegon Summer Celebration.
Date: 4th of July Holiday.
Location: That portion of Muskegon Lake, in the vicinity of Heritage Landing, within a 1000 foot radius of the fireworks launching site, located in approximate position 43°13′52″ N 086°15′48″ W.
Impact on Special Anchorage Area regulations: Regulations for that portion of the Muskegon Lake East Special Anchorage Area, as described in 33 CFR 110.81(b), which are overlapped by this regulation, are suspended during this event. The remaining area of the Muskegon Lake East Special Anchorage Area not impacted by this regulation remains available for anchoring during this event.

South Haven 4th of July Fireworks

Sponsor: South Haven Jaycees.
Date: 4th of July Holiday.
Location: Lake Michigan, Black River, South Haven, MI within a 1000 foot radius of the fireworks launching site located on the North Pier, in

approximate position 42°24′08″ N 086°17′03″ W. Datum: NAD 1902.

Tulip Time Fireworks and Water Ski Show

Sponsor: Holland Tulip Time Festival Inc.

Date: 1st weekend of May.

Location: That portion of Lake Macatawa, Holland Harbor, east of a north-south line, from shore to shore, at position 086°08′ W.

Tulip Time Water Ski Show

Sponsor: Holland Tulip Time Festival Inc.

Date: 2nd weekend of May.

Location: That portion of Lake Macatawa, Holland Harbor, east of a north-south line, from shore to shore, at position 086°08′ W.

Van Andel Fireworks Show

Sponsor: Amway Corporation, Ada, MI.

Date: 4th of July Holiday.

Location: Lake Michigan, Holland Harbor, MI, South Pier, within a 1000 foot radius of the fireworks launching site located in approximate position 42°46′21″ N 086°12′48″ W.

Venetian Festival Fireworks Display

Sponsor: Venetian Festival on the St. Joseph River Inc.

Date: 3rd weekend of July

Location: St. Joseph River, within a 1,000-foot radius of the fireworks launching site, located at the St. Joseph South Pier, in approximate position 42°06′48″ N 086°29′15″ W.

Waves of Thunder Offshore Spectacular

Sponsor: Michigan Offshore Powerboat Racing Association

Date: 3rd weekend of June

Location: That portion of Lake Michigan, from the South Pierhead Light (LLNR 18520) south along the shoreline to:

Latitute	Longitude
42°19′ N	086°19.3′ W, thence to
42°19.5′ N	086°19.8′ W, thence to
42°23.9′ N	086°18.7′ W, thence to
42°23.9′ N	086°17′ W.

West Michigan Offshore Powerboat Challenge

Sponsor: Michigan Offshore Powerplant Racing Association

Date: 1st or 2nd weekend of September

Location: That portion of Lake Michigan from:

Latitude	Longitude
43°03.4′ N	086°15.3′ W (Grand Haven South Pierhead Entrance Light, LLNR 18965), thence along the breakwater and shoreline to
42°54.8′ N	086°13′ W, thence to
42°54.8′ N	086°15.7′ W, thence to
43°03.4′ N	086°15.7′ W, thence to
43°03.4′ N	086°15.3′ W (Grand Haven South Pierhead Entrance Light, LLNR 18965).

Group Milwaukee, WI:

Chicago Air and Water Show

Sponsor: Chicago Park District

Date: 3rd or 4th weekend of August

Location: That portion of Lake Michigan from 41°55′54″ N at the shoreline, then east to a point at 41°55′54″ N 87°37′12″ W, thence southeast to a point at 41°54′ N 87°36′ W, then a line drawn southwestward to the northeast corner of the Central District Filtration Plant Breakwall, thence due west to shore.

Festa Italiana

Sponsor: The Italian Community Center

Date: 3rd weekend of July

Location: The uncharted lagoon or basin in Milwaukee Harbor north of the mouth of the Milwaukee River and directly adjacent to the Summerfest grounds, enclosed by shore on the west and a ''comma'' shaped man-made rock wall on the east. The construction of the lagoon is such that a small ''basin'' has been created with one entrance located at the northwest end, thus, there is no ''thru traffic''.

Milwaukee Summerfest

Sponsor: Milwaukee World Festival, Inc.

Date: Last week of June through 2nd weekend of July

Location: the unchartered lagoon or basin in Milwaukee Harbor north of the mouth of the Milwaukee River and directly adjacent to the Summerfest grounds, enclosed by shore on the west and a ''comma'' shaped man-made rock wall on the east. The construction of the lagoon is such that a small ''basin'' has been created with one entrance located at the northwest end, thus, there is no ''thru traffic''. Four special buoys will be set by the sponsor to delineate the entrance to the lagoon.

Racine on the Lakefront Airshow

Sponsor: Rotary Club of Racine

Date: 2nd weekend of June

Location: That portion of Racine Harbor, Lake Michigan bounded by the following corner points:

Southeast Corner—42°41.95′ N 87°45.5′ W

Southwest Corner—42°41.95′ N 87°47.2′ W

Northwest Corner—42°45.6′ N 87°46.2′ W

Northeast Corner—42°45.6′ N 87°45.5′ W

* * * * *

Dated: January 25, 1996.

G.F. Woolever,

Rear Admiral, U.S. Coast Guard, Commander, Ninth Coast Guard District.

[FR Doc. 96–3254 Filed 2–13–96; 8:45 am]

BILLING CODE 4910–14–M

DEPARTMENT OF AGRICULTURE

Forest Service

36 CFR Part 223

RIN 0596–AA26

Sale and Disposal of National Forest System Timber; Appraisal Procedures for Determining Fair Market Value

AGENCY: Forest Service, USDA.

ACTION: Final rule; technical amendment.

SUMMARY: This technical amendment clarifies the appraisal procedures for determining fair market value when appraising timber on National Forest System lands for timber sale contracts. Currently, Forest Service regulations at 36 CFR 223.60 indicate an analytical or residual value appraisal procedure as the primary method for determining the fair market value of timber sold on national forests. This technical amendment removes the residual value appraisal procedure as the primary method for determining fair market value. The intended effect of this change is to clarify that the Chief of the Forest Service has the flexibility to select appropriate appraisal methods for determining fair market value of timber to be sold.

EFFECTIVE DATE: March 15, 1996.

FOR FURTHER INFORMATION CONTACT: Rex Baumback, Timber Management Staff, (202) 205–0855.

SUPPLEMENTARY INFORMATION:

Background

The National Forest Management Act (16 U.S.C. 472a(a)) directs that all timber sold from the national forests be sold at not less than its appraised, or fair market, value. Under the current rule at 36 CFR 223.60, the basic procedure for determining fair market value is the analytical or residual value appraisal method. However, the regulation also

authorizes the use of other valid appraisal methods, as approved by the Chief, including the transaction evidence method. The analytical or residual value appraisal method determines fair market value by subtracting all manufacturing and harvesting costs and an allowance for profit and risk from the value received for the end products produced. The transaction evidence appraisal method determines fair market value based on the prices received for comparable sales of standing timber.

An Office of Inspector General audit (08627–3–SF, January 1986) recommended implementation of transaction evidence appraisals in the West. The audit found that implementing transaction evidence appraisals would bring bid values closer to advertised values, increase stumpage receipts, and reduce personnel costs. In response to this audit and pursuant to the existing rule, the Chief has approved the transaction evidence method for use in all Forest Service regions, except for Alaska (Region 10).

The current regulation was developed when the residual value appraisal method was the primary appraisal method used by all Forest Service regions. This rule does not prohibit or suspend use of the residual value appraisal method; it merely removes this method as the preferred method for determining fair market value for all timber sale contracts. Because of the narrow scope of this amendment, the Chief's authorization of the use of the transaction evidence appraisal method, and the growing use of that method of appraisal on timber sale contracts, the agency finds that this amendment is a technical amendment for which notice and comment pursuant to the Administrative Procedures Act (5 U.S.C. 553) is not necessary. National Forest System purchasers are aware of the agency's intention to use the transaction evidence appraisal method as the preferred method. Moreover, purchasers are familiar with other appraisal methods.

Regulatory Impact

This technical rule has been reviewed under USDA procedures and Executive Order 12866 on Regulatory Planning and Review. It has been determined that this is not a significant rule. This rule will not have any effect on the economy nor adversely affect productivity, competition, jobs, the environment, public health or safety, nor State or local governments. This rule will not interfere with an action taken or planned by another agency nor raise new legal or policy issues. Finally, this action will not alter the budgetary impact of entitlements, grants, user fees, or loan programs or the rights and obligations of recipients of such programs. Accordingly, this rule is not subject to OMB review under Executive Order 12866.

Moreover, this rule has been considered in light of the Regulatory Flexibility Act (5 U.S.C. 601 *et seq.*), and it has been determined that this action will not have a significant economic impact on a substantial number of small entities as defined by this act.

Environmental Impact

This action falls within a category of actions excluded from documentation in an Environmental Impact Statement and an Environmental Assessment. Section 31.1b of Forest Service Handbook 1909.15 (57 FR 43180; September 18, 1992) excludes from documentation in an environmental assessment or impact statement ''rules, regulations, or policies to establish Service-wide administrative procedures, program processes, or instructions.'' The agency's assessment is that this rule falls within this category of actions and that no extraordinary circumstances exist which would require preparation of an environmental assessment or environmental impact statement.

Controlling Paperwork Burdens on the Public

This rule does not require any recordkeeping or reporting requirements or other information collection requirements as defined in 5 CFR 1320 not already approved for use and, therefore, impose no additional paperwork burden on the public. Accordingly, the review provisions of the Paperwork Reduction Act of 1980 (44 U.S.C. 3507) and implementing regulations at 5 CFR part 1320 do not apply.

List of Subjects in 36 CFR Part 223

Exports, Government contracts, National forests, Reporting requirements, Timber sales.

Therefore, for the reasons set forth in the preamble, part 223 of title 36 of the Code of Federal Regulations is hereby amended as follows:

PART 223—SALE AND DISPOSAL OF NATIONAL FOREST SYSTEM TIMBER

1. The authority citation continues to read as follows:

Authority: 90 Stat. 2958, 16 U.S.C. 472a; 98 Stat. 2213, 16 U.S.C. 618; 104 Stat. 714–726, 16 U.S.C. 620–620h, unless otherwise noted.

Section 223.60 is revised as follows:

§ 223.60 Determining fair market value.

The objective of Forest Service timber appraisals is to determine fair market value. Fair market value is estimated by such methods as are authorized by the Chief, Forest Service, through issuance of agency directives (36 CFR 200.4). Valid methods to determine fair market value include, but are not limited to, transaction evidence appraisals, analytical appraisals, comparison appraisals, and independent estimates based on average investments. Pertinent factors affecting market value also considered include, but are not limited to, prices paid and valuations established for comparable timber, selling value of products produced, estimated operating costs, operating difficulties, and quality of timber. Considerations and valuations may recognize and adjust for factors which are not normal market influences.

Mark A. Reimers,
Acting Chief.

[FR Doc. 96–3301 Filed 2–13–96; 8:45 am]

BILLING CODE 3410–11–M

DEPARTMENT OF AGRICULTURE

Forest Service

36 CFR Part 242

DEPARTMENT OF THE INTERIOR

Fish and Wildlife Service

50 CFR Part 100

RIN 1018–AC82

Subsistence Management Regulations for Public Lands in Alaska, Subpart C & Subpart D—1995–1996 Subsistence Taking of Fish and Wildlife Regulations; Correcting Amendments

AGENCY: Forest Service, USDA, Fish and Wildlife Service, Interior.

ACTION: Correcting amendments.

SUMMARY: These corrections amend the Subsistence Management Regulations for Public Lands in Alaska (published in the Federal Register on June 15, 1995) implementing the subsistence priority for rural residents of Alaska under Title VIII of the Alaska National Interest Lands Conservation Act of 1980.

EFFECTIVE DATE: These corrections are effective July 1, 1995 through June 30, 1996.

FOR FURTHER INFORMATION CONTACT: Thomas H. Boyd, Office of Subsistence Management, U.S. Fish and Wildlife Service, 1011 E. Tudor Road, Anchorage, Alaska 99503; telephone (907) 786–3864. For questions specific to National Forest System lands, contact Ken Thompson, Regional Subsistence Program Manager, USDA—Forest

Service, Alaska Region, P.O. Box 21628, Juneau, Alaska 99802–1628; telephone (907) 586–7921.

SUPPLEMENTARY INFORMATION:

Background

Title VIII of the Alaska National Interest Lands Conservation Act (ANILCA) (16 U.S.C. 3111–3126) requires that the Secretary of the Interior and the Secretary of Agriculture (Secretaries) implement a joint program to grant a preference for subsistence uses of fish and wildlife resources on public lands, unless the State of Alaska enacts and implements laws of general applicability which are consistent with ANILCA, and which provide for the subsistence definition, preference, and participation specified in Sections 803, 804, and 805 of ANILCA. The State implemented a program that the Department of the Interior previously found to be consistent with ANILCA. However, in December 1989, the Alaska Supreme Court ruled in *McDowell* v. *State of Alaska* that the rural preference in the State subsistence statute violated the Alaska Constitution. The court's ruling in *McDowell* required the State to delete the rural preference from the subsistence statute, and therefore, negated State compliance with ANILCA. The Court stayed the effect of the decision until July 1, 1990.

As a result of the *McDowell* decision, the Department of the Interior and the Department of Agriculture (Departments) assumed, on July 1, 1990, responsibility for implementation of Title VIII of ANILCA on public lands. On June 29, 1990, the Temporary Subsistence Management Regulations for Public Lands in Alaska were published in the Federal Register (55 FR 27114–27170). Consistent with Subparts A, B, and C of these regulations, a Federal Subsistence Board (Board) was established to administer the Federal Subsistence Management Program. The Board's composition includes a Chair appointed by the Secretary of the Interior with concurrence of the Secretary of Agriculture; the Alaska Regional Director, U.S. Fish and Wildlife Service; the Alaska Regional Director, U.S. National Park Service, the Alaska State Director, U.S. Bureau of Land Management; the Alaska Area Director, U.S. Bureau of Indian Affairs; and the Alaska Regional Forester, USDA Forest Service. Through the Board, these agencies have participated in development of regulations for Subparts A, B, and C, and the annual Subpart D regulations. All Board members have reviewed these corrections and agree with their substance. Because Subparts C and D relate to public lands managed by an agency or agencies in both the Departments of Agriculture and the Interior, identical correcting text will be incorporated into 36 CFR Part 242 and 50 CFR Part 100.

Proposed Subpart C regulations for customary and traditional use determinations and Subpart D regulations for the 1995–1996 seasons and bag limits, and methods and means were published on September 2, 1994, in the Federal Register (59 FR 45924–45961). A 60-day comment period providing for public review of the proposed rule was advertised by mail, radio, and newspaper. Subsequent to that 60-day review period, the Board prepared a booklet describing all proposals for change. The public then had an additional 30 days in which to comment on the proposals for changes to the regulations. The Federal Subsistence Regional Advisory Councils met in regional centers, received public comments, and formulated recommendations to the Board on proposals for their respective regions. The final regulations, published on June 15, 1995 (60 FR 31542–31594) reflect Board review and consideration of Regional Council recommendations and public comments submitted to the Board during their April meeting. The Board heard public testimony and deliberated Requests for Reconsideration and Special Action in public forum on September 26 and November 9, 1995.

These correcting amendments are a result of Requests for Reconsideration of some of the Board's decisions in April and some requests for Special Action as a result of resource concerns. Below are summaries of each action.

Subpart D

Units 11, 12, 13, 20, and 25(C)—Lynx—The Board acted on a request from the Alaska Department of Fish and Game (ADF&G) to lengthen the season in 25(C) and parts of Unit 20, and shorten the season in Units 11, 12, 13, and parts of Unit 20. This follows the Board's previous agreement to follow a harvest tracking strategy where possible. The strategy calls for shortening or closing trapping seasons when lynx numbers are low and lengthening or opening seasons when lynx are abundant. The Regional Councils for the affected areas supported this action to protect the viability of the lynx populations in those Units.

Unit 13—Caribou—Upon receipt of a request for Special Action the Board, at its November 9, 1995, meeting deliberated the issue of opening Unit 13 to caribou hunting. The caribou herd had increased by about 6,000 animals and remained in an accessible area. The Board opened a season to coincide with the State season to provide subsistence users an opportunity to harvest caribou.

Unit 17(A)—Caribou (Mulchatna Herd)—Upon receipt of a request for Special Action the Board, as its September 26, 1995, meeting deliberated the issue of opening Unit 17(A) to caribou hunting. The Mulchatna caribou herd which numbers about 160,000 animals is moving into the western portion of Unit 17(A). The Board established a season to be announced when enough caribou have moved into the area to allow a harvest without jeopardizing smaller resident herds.

Unit 17 (A) and (C)—Caribou—Upon receipt of request for Special Action the Board, at its September 26, 1995, meeting deliberated the issue of opening Unit 17 (A) and (C) to caribou hunting one month earlier. The past year's harvest was lower than anticipated due to poor travel conditions. Because this is a quota hunt the opening of the season one month earlier will not cause any additional harvest other than what is planned.

Unit 22(A)—Moose—Upon receipt of a Request for Reconsideration of an action taken at the April meeting, the Board deliberated the issue of the health of the moose population in Unit 22(A). As a result, the Board closed public lands to non-subsistence moose hunting from December 1, 1995, through January 31, 1996.

Only the items described above are being changed; but for clarity, the entire table section for the pertinent species in each Unit is reproduced.

The above actions were supported by the Regional Councils in the affected areas. Notice of the Board meeting and the subjects to be considered were widely circulated and the public had an opportunity to comment and participate.

The Board finds that additional public notice and comment requirements under the Administrative Procedure Act (APA) for this extension are impracticable, unnecessary, and contrary to the public interest. A lapse in regulatory control could seriously affect the continued viability of wildlife populations, adversely impact future subsistence opportunities for rural Alaskans and would generally fail to serve the overall public interest. Therefore, the Board finds good cause pursuant to 5 U.S.C. 553(b)(B) to waive the public notice and comment procedures prior to publication of this rule correction. The Board also finds

good cause under 5 U.S.C. 553(d)(3) to make this rule correction effective July 1, 1995, the effective date of the Subsistence Management Regulations for Public Lands in Alaska.

Conformance With Statutory and Regulatory Authorities

National Environmental Policy Act Compliance

A Draft Environmental Impact Statement (DEIS) that described four alternatives for developing a Federal Subsistence Management Program was distributed for public comment on October 7, 1991. That document described the major issues associated with Federal subsistence management as identified through public meetings, written comments and staff analysis and examined the environmental consequences of the four alternatives. Proposed regulations (Subparts A, B, and C) that would implement the preferred alternative were included in the DEIS as an appendix. The DEIS and the proposed administrative regulations presented a framework for an annual regulatory cycle regarding subsistence hunting and fishing regulations (Subpart D). The Final Environmental Impact Statement (FEIS) was published on February 28, 1992.

Based on the public comment period, the analysis contained in the FEIS, and the recommendations of the Federal Subsistence Board and the Department of the Interior's Subsistence Policy Group, it was the decision of the Secretary of the Interior, with the concurrence of the Secretary of Agriculture, through the U.S. Department of Agriculture—Forest Service, to implement a modified Alternative IV as identified in the DEIS and FEIS (Record of Decision on Subsistence Management for Federal Public Lands in Alaska (ROD), signed April 6, 1992). The DEIS and the selected alternative in the FEIS defined the administrative framework of an annual regulatory cycle for subsistence hunting and fishing regulations. The final rule for Subsistence Management Regulations for Public Lands in Alaska, Subparts A, B, and C, published May 29, 1992 (57 FR 22940–22964) implements the Federal Subsistence Management Program and includes a framework for an annual cycle for subsistence hunting and fishing regulations.

Compliance With Section 810 of ANILCA

The intent of all Federal subsistence regulations is to accord subsistence uses of fish and wildlife on public lands a priority over the taking of fish and wildlife on such lands for other purposes, unless restriction is necessary to conserve healthy fish and wildlife populations. A Section 810 analysis was completed as part of the FEIS process. The final Section 810 analysis determination appears in the April 6, 1992, ROD which found that the Federal Subsistence Management Program, under a modified Alternative IV with an annual process for setting hunting and fishing regulations, had no significant possibility of a significant restriction of subsistence uses.

Paperwork Reduction Act

As required by the Paperwork Reduction Act of 1995 (44 U.S.C. 3507(d)), the U.S. Fish and Wildlife Service has received approval for this collection of information, with approval number 1018–0075, with the expiration date of July 31, 1996.

The collection of information will be achieved through the use of the Federal Subsistence Hunt Permit Application. This collection of information will establish whether the applicant qualifies to participate in a Federal subsistence hunt on public land in Alaska and will provide a report of harvest and location of harvest.

The likely respondents to this collection of information are rural Alaska residents who wish to participate in specific subsistence hunts on Federal land. The collected information is necessary to determine harvest success and harvest location in order to make management decisions relative to the conservation of healthy wildlife populations. The annual burden of reporting and recordkeeping is estimated to average 0.25 hours per response, including time for reviewing instructions, gathering and maintaining data, and completing and reviewing the form. The estimated number of likely respondents under these correcting amendments is less than 200, yielding a total annual reporting and recordkeeping burden of fifty hours or less. Direct comments on the burden estimate or any other aspect of this form to: Information Collection Officer, U.S. Fish and Wildlife Service, 1849 C Street NW., MS 224 ARLSQ, Washington, DC 20240; and the Office of Management and Budget, Paperwork Reduction Project (1018–0075), Washington, DC 20503. Additional information collection requirements may be imposed if Local Advisory Committees subject to the Federal Advisory Committee Act are established under Subpart B. Such requirements will be submitted to OMB for approval prior to their implementation.

This rule was not subject to OMB review under Executive Order 12866.

Economic Effects

The Regulatory Flexibility Act of 1980 (5 U.S.C. 601 *et seq.*) requires preparation of flexibility analyses for rules that will have a significant effect on a substantial number of small entities, which include small businesses, organizations or governmental jurisdictions. The Departments have determined that this rulemaking will not have a significant economic effect on a substantial number of small entities within the meaning of the Regulatory Flexibility Act.

This rulemaking will impose no significant costs on small entities; the exact number of businesses and the amount of trade that will result from this Federal land-related activity is unknown. The aggregate effect is an insignificant positive economic effect on a number of small entities. The number of small entities affected is unknown; but, the fact that the positive effects will be seasonal in nature and will, in most cases, merely continue preexisting uses of public lands indicates that they will not be significant.

These regulations do not meet the threshold criteria of ''Federalism Effects'' as set forth in Executive Order 12612. Title VIII of ANILCA requires the Secretaries to administer a subsistence preference on public lands. The scope of this program is limited by definition to certain public lands. Likewise, these regulations have no significant takings implication relating to any property rights as outlined by Executive Order 12630.

Drafting Information

These regulations were drafted under the guidance of Thomas H. Boyd, of the Office of Subsistence Management, Alaska Regional Office, U.S. Fish and Wildlife Service, Anchorage, Alaska. Additional guidance was provided by Peggy Fox, Alaska State Office, Bureau of Land Management; Sandy Rabinowitch, Alaska Regional Office, National Park Service; John Borbridge, Alaska Area Office, Bureau of Indian Affairs; and Ken Thompson, USDA-Forest Service.

List of Subjects

36 CFR Part 242

Administrative practice and procedure, Alaska, Fish, National Forests, Public Lands, Reporting and recordkeeping requirements, Wildlife.

50 CFR Part 100

Administrative practice and procedure, Alaska, Fish, Public Lands,

Reporting and recordkeeping requirements, Subsistence, Wildlife.

For the reasons set out in the preamble, Title 36, Part 242, and Title 50, Part 100, of the Code of Federal Regulations, are amended as set forth below.

PART ____—SUBSISTENCE MANAGEMENT REGULATIONS FOR PUBLIC LANDS IN ALASKA

1. The authority citation for both 36 CFR Part 242 and 50 CFR Part 100 continues to read as follows:

Authority: 16 U.S.C. 3, 472, 551, 668dd, 3101–3126; 18 U.S.C. 3551–3586; 43 U.S.C. 1733.

2. Section ____.25(k)(11) is amended in the table under ''Trapping'' by revising the entry for Lynx to read as follows:

§ ____.25 Subsistence taking of wildlife.

* * * * *

(k) * * *

(11) * * *

Harvest limits	Open season
* * * * *	
Trapping:	
* * * * *	
Lynx: No limit	Dec. 15–Jan. 15.
* * * * *	

* * * * *

3. Section ____.25(k)(12) is amended in the table under ''Trapping'' by revising the entry for Lynx to read as follows:

* * * * *

(k) * * *

(12) * * *

Harvest limits	Open season
* * * * *	
Trapping:	
* * * * *	
Lynx: No limit	Dec. 15–Jan. 15.
* * * * *	

* * * * *

4. Section ____.25(k)(13)(iii) is amended in the table under ''Hunting'' by revising the entry for Caribou to read as follows:

* * * * *

(k) * * *

(13) * * *

(iii) * * *

Harvest limits	Open season
Hunting:	
* * * * *	
Caribou: 2 caribou by Federal registration permit only. Hunting within the Trans-Alaska Oil Pipeline right-of-way is prohibited. The right-of-way is identified by an area occupied by the pipeline (buried or above ground) and the cleared area 25 feet on either side of the pipeline..	Aug. 10–Sept. 30, Nov. 15–Dec. 31, Jan. 5–Mar. 31.
* * * * *	

* * * * *

5. Section ____.25(k)(13)(iii) is amended in the table under ''Trapping'' by revising the entry for Lynx to read as follows:

* * * * *

(k) * * *

(13) * * *

(iii) * * *

Harvest limits	Open season
* * * * *	
Trapping:	
* * * * *	
Lynx: No limit	Dec. 15—Jan. 15.
* * * * *	

* * * * *

6. Section ____.25(k)(17)(iii) is amended in the table under ''Hunting'' by revising the entry for Caribou to read as follows:

* * * * *

(k) * * *

(17) * * *

(iii) * * *

Harvest limits	Open season
Hunting:	
* * * * *	
Caribou:	
Unit 17(A)—that portion west of the Togiak River, south to Cape Newenham—2 caribou. Season to be opened by announcement sometime between Aug. 1–April 15.	Season to be announced.
Unit 17 (A) and (C)—that portion of 17 (A) and (C) consisting of the Nushagak Peninsula south of the Igushik River, Tuklung River and Tuklung Hills, west to Tvativak Bay—1 caribou by Federal registration permit. Public lands are closed to the taking of caribou except by the residents of Togiak, Twin HIlls, Manokotak, Aleknagik, Dillingham, Clark's Point, and Ekuk during seasons identified above.	Dec. 1–Mar. 31.
Unit 17 (B) and (C)—that portion of 17 (C) east of the Nushagak River—5 caribou; however, no more than 2 caribou may be bulls..	Aug. 1–Apr. 15
* * * * *	

* * * * *

7. Section ____.25(k)(20)(iii)(C) is amended in the table under ''Trapping'' by revising the entry for Lynx to read as follows:

* * * * *

(k) * * *

(20) * * *

(iii) * * *

(C) * * *

Harvest limits	Open season
* * * * *	
Trapping:	
* * * * *	
Lynx:	
Unit 20 (A), (B), (D), (E), and (C) East of the Teklanika River—No limit.	Dec. 15–Jan. 15.
Unit 20(F) and the remainder of 20(C)—No limit.	Dec. 1–Jan. 31.
* * * * *	

* * * * *

8. Section ____.25(k)(22)(ii)(C) is amended in the table under ''Hunting'' by revising the entry for Moose to read as follows:

* * * * *

(k) * * *

(22) * * *

(ii) * * *

(C) * * *

Harvest limits	Open season
Hunting	
* * * * *	
Moose:	
Unit 22(A)—1 antlered bull; however the period of Dec. 1–Jan. 31 is restricted to residents of Unit 22(A) only.	Aug. 1–Sept. 30, Dec. 1–Jan. 31.
Unit 22(B)—1 moose; however, antlerless moose may be taken only from Dec. 1–Dec. 31; no person may take a cow accompanied by a calf.	Aug. 1–Jan. 31.
Unit 22(C)—1 antlered bull.	Sept. 1–Sept. 14.
Unit 22(D)—1 moose; however, antlerless moose may be taken only from Dec. 1–Dec. 31; no person may take a cow accompanied by a calf.	Aug. 1–Jan. 31.
Unit 22(E)—1 moose; no person may take a cow accompanied by a calf.	Aug. 1–Mar. 31.
* * * * *	

* * * * *

9. Section ____.25(k)(25)(iii)(B) is amended in the table under ''Trapping'' by revising the entry for Lynx to read as follows:

* * * * *

(k) * * *

(25) * * *

(iii) * * *

(B) * * *

Harvest limits	Open season
Trapping:	
* * * * *	
Lynx:	
Unit 25(C)—No limit ..	Dec. 1–Jan. 31.
Remainder of Unit 25—No limit.	Nov. 1–Feb. 28.
* * * * *	

* * * * *

Dated: January 19, 1996.

Mitch Demientieff,

Chair, Federal Subsistence Board.

Dated: January 18, 1996.

Phil Janik,

Regional Forester, USDA—Forest Service.

[FR Doc. 96–3186 Filed 2–13–96; 8:45 am]

BILLING CODES 3410–11–M, 4310–55–M

ENVIRONMENTAL PROTECTION AGENCY

40 CFR Part 52

[NC–049–1–7197a; FRL–5336–6]

Approval and Promulgation of Implementation Plans, North Carolina: Approval of Revisions to the North Carolina State Implementation Plan

AGENCY: Environmental Protection Agency (EPA).

ACTION: Direct final rule.

SUMMARY: On May 15, 1991, the State of North Carolina, through the North Carolina Department of Environment, Health and Natural Resources, submitted revisions to the North Carolina State Implementation Plan (SIP) to EPA. These revisions include the correcting of an address; the limiting of emissions of particulates from fuel burning indirect heat exchangers; the elimination of a conflicting statement on updating referenced regulations; the addition of compounds whose emissions will not be considered in nonattainment areas; the changing of the allowable emission limits for several boilers; and the clarification of the permit requirements for replacement of existing equipment and for sources subject to NSPS, NESHAPS and PSD requirements.

DATES: This action is effective April 15, 1996, unless notice is received by March 15, 1996, that someone wishes to submit adverse or critical comments. If the effective date is delayed, timely notice will be published in the Federal Register.

ADDRESSES: Written comments should be addressed to: Randy Terry, Regulatory Planning and Development Section, Air Programs Branch, Air, Pesticides & Toxics Management Division, Region 4 Environmental Protection Agency, 345 Courtland Street, NE, Atlanta, Georgia 30365.

Copies of the material submitted by the NCDEHNR may be examined during normal business hours at the following locations:

Air and Radiation Docket and Information Center (Air Docket 6102), U.S. Environmental Protection Agency, 401 M Street, SW, Washington, DC 20460.

Environmental Protection Agency, Region IV Air Programs Branch, 345 Courtland Street, NE, Atlanta, Georgia 30365.

North Carolina Department of Environment, Health and Natural Resources, 512 North Salisbury Street, Raleigh, North Carolina 27604.

FOR FURTHER INFORMATION CONTACT: Randy Terry, Regulatory Planning and Development Section, Air Programs Branch, Air, Pesticides & Toxics Management Division, Region 4 Environmental Protection Agency, 345 Courtland Street, NE, Atlanta, Georgia 30365. The telephone number is 404/347–3555 ext. 4212.

SUPPLEMENTARY INFORMATION: On May 15, 1991, the Environmental Management Commission submitted, to EPA, several amendments concerning North Carolina's air quality regulations. The submitted revisions include the limiting of emissions of particulates from fuel burning indirect heat exchangers; the elimination of a conflicting statement on updating referenced regulations; the addition of compounds whose emissions will not be considered in nonattainment areas; the changing of the allowable emission limits for several boilers; and several smaller administrative changes.

On August 23, 1991, EPA notified the State of corrections needing to be made prior to the approval of amendment 15A NCAC 2D .0501. Subsequently, North Carolina, in a December 19, 1991, letter, requested to have that amendment withdrawn. In a September 20, 1991, letter, North Carolina submitted a revised version of Rule 2D .0536 Particulate Emissions From Electric Utility Boilers to replace the version that was contained in the hearing record on this Rule. The original version submitted on May 15, 1991, contained changes made in the North Carolina Rule of which parts are not contained in the Federally approved SIP. The amended version is discussed later in this document. North Carolina also submitted, in a September 24, 1992, package, revisions to 15A NCAC 2D .1002 Applicability. These revisions are also being addressed in this rulemaking.

Revisions to rule 15A NCAC 2D .0531 Sources in Nonattainment Areas were addressed in the October 31, 1994 Federal Register Notice (59 FR 54388–54389.)

EPA is approving the following revisions to the North Carolina SIP, because they are consistent with the requirements set forth in the Clean Air Act (CAA).

15A NCAC 2D .0103 Copies of Referenced Federal Regulations

North Carolina amended this rule to update the location at which referenced material is available for public inspection.

15A NCAC 2D .0503 Particulates From Fuel Burning Indirect Heat Exchangers

North Carolina amended this rule to clarify the emissions of particulates from fuel burning indirect heat exchangers. This revision in no way changes the interpretation of the previous rule.

15A NCAC 2D .0530 Prevention of Significant Deterioration

North Carolina amended this rule to eliminate a conflicting statement on updating referenced federal regulations.

15A NCAC 2D .0536 Particulate Emissions From Electric Utility Boilers

North Carolina amended this rule to change the maximum allowable emissions rates from electric utility boilers at several utility facilities.

15A NCAC 2H .0601 Purpose and Scope

North Carolina amended this rule to clarify the types of sources for which construction or operating permits are required or not required.

15A NCAC 2H .0607 Copies of Referenced Documents

North Carolina amended this rule to update the location at which referenced materials are available for public inspection.

Final Action

EPA is approving the above referenced revision to the North Carolina SIP. This action is being taken without prior proposal because the EPA views this as a noncontroversial amendment and anticipates no adverse comments. However, in a separate document in this Federal Register publication, the EPA is proposing to approve the SIP revision should adverse or critical comments be filed. This action will be effective April 15, 1996, unless, by March 15, 1996, adverse or critical comments are received.

If the EPA receives such comments, this action will be withdrawn before the effective date by publishing a subsequent document that will withdraw the final action. All public comments received will then be addressed in a subsequent final rule based on this action serving as a proposed rule. The EPA will not institute a second comment period on this action. Any parties interested in commenting on this action should do so at this time. If no such comments are received, the public is advised that this action will be effective April 15, 1996.

Under Section 307(b)(1) of the Act, 42 U.S.C. 7607 (b)(1), petitions for judicial review of this action must be filed in the United States Court of Appeals for the appropriate circuit by April 15, 1996. Filing a petition for reconsideration by the Administrator of this final rule does not affect the finality of this rule for purposes of judicial review nor does it extend the time within which a petition for judicial review may be filed, and shall not postpone the effectiveness of such rule or action. This action may not be challenged later in proceedings to enforce its requirements. (See Section 307(b)(2) of the Act, 42 U.S.C. 7607 (b)(2).)

This action has been classified as a Table 3 action for signature by the Regional Administrator under the procedures published in the Federal Register on January 19, 1989 (54 FR 2214–2225), as revised by a July 10, 1995, memorandum from Mary Nichols, Assistant Administrator for Air and Radiation. The Office of Management and Budget (OMB) has exempted this regulatory action from E.O. 12866 review.

Nothing in this action shall be construed as permitting or allowing or establishing a precedent for any future request for a revision to any state implementation plan. Each request for revision to the state implementation plan shall be considered separately in light of specific technical, economic, and environmental factors and in relation to relevant statutory and regulatory requirements.

Under the Regulatory Flexibility Act, 5 U.S.C. 600 *et seq.*, EPA must prepare a regulatory flexibility analysis assessing the impact of any proposed or final rule on small entities. 5 U.S.C. 603 and 604. Alternatively, EPA may certify that the rule will not have a significant impact on a substantial number of small entities. Small entities include small businesses, small not-for-profit enterprises, and government entities with jurisdiction over populations of less than 50,000.

SIP approvals under 110 and subchapter I, part D of the CAA do not create any new requirements, but simply approve requirements that the State is already imposing. Therefore, because the Federal SIP-approval does not impose any new requirements, I certify that it does not have a significant impact on any small entities affected. Moreover, due to the nature of the federal-state relationship under the CAA, preparation of a regulatory flexibility analysis would constitute federal inquiry into the economic reasonableness of state action. The CAA forbids EPA to base its actions concerning SIPs on such grounds. *Union Electric Co.* v. *U.S. E.P.A.*, 427 U.S. 246, 256–66 (S.Ct. 1976); 42 U.S.C. 7410(a)(2).

List of Subjects in 40 CFR Part 52

Environmental protection, Air pollution control, Incorporation by Reference, Intergovernmental relations, Particulate Matter, Reporting and recordkeeping requirements.

Dated: November 6, 1995.

Patrick M. Tobin,

Acting Regional Administrator.

Part 52 of chapter I, title 40, Code of Federal Regulations, is amended as follows:

PART 52—[AMENDED]

1. The authority citation for part 52 continues to read as follows:

Authority: 42.U.S.C. 7401–7671q.

Subpart II—North Carolina

2. Section 52.1770, is amended by adding paragraph (c)(78) to read as follows:

§ 52.1770 Identification of plan.

* * * * *

(c) * * *

(78) Miscellaneous revisions to the North Carolina State Implementation Plan which were submitted on May 15, 1991.

(i) Incorporation by reference. (A) Amendments to North Carolina regulations 15A NCAC 2D.0103, 2D.0503, 2D.0530, 2D.0536, 2H.0601, and 2H.0607, of the North Carolina State Implementation Plan submitted on May 15, 1991, which were state effective on August 1, 1991.

(ii) Other material. None

* * * * *

[FR Doc. 96–3326 Filed 2–13–96; 8:45 am]

BILLING CODE 6560–50–P

---

40 CFR Part 52

[ME–20–01–6906a; A–1–FRL–5339–4]

Approval and Promulgation of Air Quality Implementation Plans; Maine: Revisions to the Requirements and Procedures for NSR/PSD License Applications

AGENCY: Environmental Protection Agency (EPA).

ACTION: Direct final rule.

SUMMARY: EPA is approving a State Implementation Plan (SIP) revision submitted by the State of Maine. This revision establishes and requires the implementation of the Clean Air Act Amendments (CAAA) of 1990 with regard to New Source Review (NSR) in

areas which have not attained the National Ambient Air Quality Standards (NAAQS). In addition, the revision contains minor changes to Maine's Prevention of Significant Deterioration (PSD) program. The intended effect of this action is to approve the State's request to amend its SIP to satisfy the Federal requirements. This action is being taken in accordance with the Clean Air Act.

DATES: This action is effective April 15, 1996, unless notice is received within 30 days that adverse or critical comments will be submitted. If the effective date is delayed, timely notice will be published in the Federal Register.

ADDRESSES: Comments may be mailed to Susan Studlien, Acting Director, Air, Pesticides and Toxics Management Division, U.S. Environmental Protection Agency, Region I, JFK Federal Building, Boston, MA 02203. Copies of the documents relevant to this action are available for public inspection during normal business hours, by appointment, at the Air, Pesticides and Toxics Management Division, U.S. Environmental Protection Agency, Region I, One Congress Street, 10th floor, Boston, MA; Air and Radiation Docket and Information Center, U.S. Environmental Protection Agency, 401 M Street SW. (LE–131), Washington, DC 20460; and the Bureau of Air Quality Control, Department of Environmental Protection, 71 Hospital Street, Augusta, ME 04333.

FOR FURTHER INFORMATION CONTACT: Brendan McCahill, (617) 565–3262.

SUPPLEMENTARY INFORMATION: On July 12, 1994, the Maine Department of Environmental Protection (DEP) submitted revisions to its SIP pertaining to the requirements and procedures for the processing and approval of license applications for new or modified stationary sources of air pollution. The revisions consist of modifications to Chapter 100, ''Definitions Regulations,'' Chapter 113, ''Growth Offset Regulation,'' and Chapter 115, ''Emission License Regulation'' and primarily affects major source licensing in nonattainment areas including the ozone nonattainment areas.

This notice is divided into four sections for clarity. Section I discusses the procedural background concerning Maine's SIP submittal. Section II discusses the revisions to the general requirements for nonattainment NSR. Section III discusses the revisions to the specific requirements for NSR in the ozone nonattainment areas. Section IV discusses revisions to Maine's PSD program. Section V discusses the EPA's final action.

EPA is publishing this action without prior proposal because the Agency views this as a noncontroversial amendment and anticipates no adverse comments. However, in a separate document in this Federal Register publication, EPA is proposing to approve the SIP revision should adverse or critical comments be filed. This action will be effective April 15, 1996, unless, by March 15, 1996, adverse or critical comments are received.

If the EPA receives such comments, this action will be withdrawn before the effective date by simultaneously publishing a subsequent notice that will withdraw the final action. All public comments received will then be addressed in a subsequent final rule based on this action serving as a proposed rule. The EPA will not institute a second comment period on this action. Any parties interested in commenting on this action should do so at this time. If no such comments are received, the public is advised that this action will be effective on April 15, 1996.

I. Procedural Background

Section 110(k) of the CAA sets out provisions governing EPA's review of SIP submittals (see 57 FR 13565–13566, April 16, 1992). The CAA requires States to observe certain procedural requirements in developing implementation plans and plan revisions for submission to EPA. Section 110(a)(2) of the Act provides that each implementation plan submitted by a State must be adopted after reasonable notice and public hearing.[1] Section 110(l) of the Act similarly provides that each revision to an implementation plan submitted by a State under the Act must be adopted by such State after reasonable notice and public hearing.

The EPA also must determine whether a submittal is complete and therefore warrants further EPA review and action (see CAA section 110(k)(1) and 57 FR 13565, April 16, 1992). The EPA's completeness criteria for SIP submittals are set out at 40 CFR part 51, appendix V (1991), as amended by 57 FR 42216 (August 26, 1991). The EPA attempts to make completeness determinations within 60 days of receiving a submission. However, a submittal is deemed complete by operation of law under section 110(k)(1)(B) if a completeness determination is not made by EPA within 6 months after receipt of the submission.

The State of Maine held a public hearing on May 25, 1994, to entertain public comment on the NSR implementation plan. Following the public hearing, the plan was adopted by Maine's Board of Environmental Protection on June 22, 1994. The plan was filed with the Secretary of State on July 5, 1994, and became effective on July 11, 1994. The plan was submitted to EPA on July 12, 1994 as a proposed revision to the SIP.

The SIP revision was reviewed by EPA to determine completeness shortly after its submittal, in accordance with the completeness criteria referenced above. The submittal was found to be complete on July 14, 1994 and a letter dated July 14, 1994 was forwarded to Debrah Richard, Acting Commissioner, Department of Environmental Protection, indicating the completeness of the submittal and the next steps to be taken in the review process.

II. General Requirements for Nonattainment NSR

A. Background

The air quality planning requirements for nonattainment NSR are set out in part D of subchapter I of the Act. The EPA has issued a ''General Preamble'' describing EPA's preliminary views on how EPA intends to review SIPs and SIP revisions submitted under part D, including those State submittals containing nonattainment area NSR SIP requirements (see 57 FR 13498 (April 16, 1992) and 57 FR 18070 (April 28, 1992)). Because EPA is describing its interpretations here only in broad terms, the reader should refer to the General Preamble for a more detailed discussion of the interpretations of part D advanced in today's proposal and the supporting rationale.

B. Summary of Maine's Regulation

The general nonattainment NSR requirements are found in sections 172 and 173 of part D of subchapter I of the Act and must be met by all nonattainment areas. The following paragraphs reference the nonattainment NSR requirements that were required to be submitted to EPA by November 15, 1992 and explain how Maine's rules meet those requirements. Some of these provisions were already contained in Maine's existing SIP while others are being approved today.

1. Chapter 113(2)(A) of Maine's regulations establishes provisions in accordance with section 173(a)(1)(A) of the CAA to assure that calculations of emissions offsets are based on the same

[1] Section 172(c)(7) of the Act provides that plan provisions for nonattainment areas shall meet the applicable provisions of section 110(a)(2).

emissions baseline used in the demonstration of Reasonable Further Progress (RFP).

2. Chapter 113(2)(C)(3) (a) and (b) of Maine's regulations establishes provisions in accordance with section 173(c)(1) of the CAA to allow offsets to be obtained in another nonattainment area if: (i) The area has an equal or higher nonattainment classification; and, (ii) emissions from the other nonattainment area contribute to a NAAQS violation in the area in which the source would construct.

3. Chapter 113(2)(E)(3) of Maine's regulations establishes provisions in accordance with section 173(c)(1) of the CAA that any license to a new or modified source must be in effect and enforceable by the time the new or modified source commences operation.

4. Chapter 113(2)(E)(3) of Maine's regulations establishes provisions in accordance with section 173(c)(1) of the CAA to assure that emissions increases from new or modified sources are offset by real reductions in actual emissions.

5. Chapter 113(2)(D) (1), (2) and (3) of Maine's regulations establishes provisions in accordance with section 173(c)(2) of the CAA to prevent emissions reductions otherwise required by the Act from being credited for purposes of satisfying part D offset requirements.

6. The 1990 CAAA modified the Act's provisions on growth allowances in nonattainment areas by (1) eliminating existing growth allowances in the nonattainment area that received a notice prior or subsequent to the Amendments that the SIP was substantially inadequate, and (2) restricting growth allowances to only those portions of nonattainment areas formally targeted as special zones for economic growth. Sections 173(b) and 173(a)(1)(B) of the CAA. Maine's regulations do not contain provisions for growth allowances and are consequently consistent with the Act. 9

7. Chapter 115(V)(B)(2)(C) of Maine's regulations establishes provisions in accordance with section 173(a)(5) of the CAA that, as a prerequisite to issuing any part D license, require an analysis of alternative sites, sizes, production processes, and analysis of alternative sites, sizes, production processes, and environmental control techniques for proposed sources that demonstrates that the benefits of the proposed source significantly outweigh the environmental and social costs imposed as a result of its location, construction, or modification.

8. Maine and the EPA-New England office, have established a mechanism through the Regional grants program to supply information from nonattainment NSR licenses to EPA's RACT/BACT/LAER clearinghouse in accordance with section 173(d) of the CAA.

9. Chapter 115(V)(B)(2)(a) of Maine's regulations establishes provisions, in accordance with section 173(a)(3) of the CAA, to assure that owners or operators of each proposed new or modified major stationary source demonstrate, as a condition of license issuance, that all other major stationary sources under the same ownership in the State are in compliance with the CAA.

III. General Requirements for Ozone Nonattainment NSR

A. Background

The general nonattainment NSR requirements are found in sections 172 and 173 of part D of subchapter I of the Act and must be met by all nonattainment areas. The requirements for ozone that supplement or supersede these requirements are found in subpart 2 of part D. In addition to requirements for ozone nonattainment areas, subpart 2 includes section 182(f), which states that requirements for major stationary sources of VOC shall apply to major stationary sources of oxides of nitrogen (NO_X) unless the Administrator makes certain determinations related to the benefits or contribution of NO_X control to air quality, ozone attainment, or ozone air quality. States were required under section 182(a)(2)(C) to adopt new NSR rules for ozone nonattainment areas by November 15, 1992.

B. Summary of Maine's Submittal

Pursuant to section 172(c)(5) of the CAA, State implementation plans must require permits for the construction and operation of new or modified major stationary sources in nonattainment areas. The federal statutory permit requirements for ozone nonattainment areas are generally contained in revised section 173, and in subpart 2 of Subchapter I, part D of the CAA. These are the minimum requirements that States must include in an approvable implementation plan. For all classifications of ozone nonattainment areas and for ozone transport regions (OTRs), States must adopt the appropriate major source thresholds and offset ratios, and must adopt provisions to ensure that any new or modified major stationary source of NO_X satisfies the requirements applicable to any major source of VOC, unless a special NO_X exemption is granted by the Administrator under the provision of section 182(f). For serious and severe ozone nonattainment areas, State plans must implement sections 182(c) (6), (7) and (8) with regard to modifications of major sources. The State of Maine currently contains moderate, marginal and nonclassified nonattainment areas, as well as areas classified as attainment. However, the entire State is contained within the OTR (see section 184 of the CAA). The CAA provisions that apply to the OTR provide equal or more stringent requirements than those provisions applicable to the marginal and moderate nonattainment areas and under the CAA are applicable throughout the State. Therefore, Maine must adopt, as a minimum, the provisions of the CAA applicable to the OTR into its plans.

The following paragraphs reference the ozone nonattainment and OTR NSR requirements which Maine was required to submit to EPA by November 15, 1992 and how Maine has met those requirements.

1. Chapters 100(58) and 100(101) of Maine's regulations establish a major source threshold level for the OTR of 40 tons per year (tpy) for VOC. Because the major source threshold level for the OTR as required under section 184(b)(2) of the CAA is 50 tpy for VOC, Maine has met this requirement.

2. Chapters 100(58) and 100(101) of Maine's regulations establish, in accordance with sections 184(b)(2), 182(f) and 302(j) of the CAA, a major source threshold level for the OTR of 100 tpy for NO_X.

3. Chapter 113(2)(C) (1) and (2) of Maine's regulation establish, in accordance with sections 184(b)(2), 182(b)(5) and 182(f) of the CAA, an offset ratio of 1.15 to 1 for major sources or major modifications to major sources of VOC and NO_X in the OTR.

IV. Revisions to PSD and Other NSR Programs

Summary of Maine's Submittal

Permitting requirements for the construction of major new sources and major modifications to major sources in attainment/unclassifiable areas are set out in part C of Subchapter I of the CAA and in 40 CFR 51.166, and must be met by all State PSD program SIPs. Maine has revised various provisions in its PSD program to make them consistent with the Federal rules.

A brief description of the revisions is as follows:

(a) In Chapter 100(101) of Maine's regulation, the threshold level for new major sources of NO_X in NO_X attainment areas was changed from 40 to 100 tpy. This is consistent with the requirements at 40 CFR 51.166(b)(1)(i)(a).

(b) In Chapter 100(101) of Maine's regulations, the definition of

''significant'' was revised to include the significance levels for municipal waste combustor pollutants. The threshold levels are consistent with the requirements at 40 CFR 51.166(b)(23)(i).

(c) Chapter 115(II)(D) of Maine's regulations establishes provisions to exempt pollution control projects from Maine's air emissions license requirements to the extent allowed under the CAA. To be exempt, a project must meet all requirements of applicable State and EPA rules, policies and guidelines which specifically address exemptions from the NSR and PSD programs for pollution control projects.

V. Final Action

EPA is approving the revisions to the following parts of the State of Maine's regulations: Chapter 100, ''Definition Regulations,'' Chapter 113, ''Growth Offset Regulation'' and Chapter 115, ''Emissions License Regulation.'' These revisions became effective on the State level on July 11, 1994. These revisions meet the nonattainment area NSR provisions of part D of the CAA as well as the requirements of the General Preamble and other miscellaneous requirements.

Under the Regulatory Flexibility Act, 5 U.S.C. 600 *et seq.*, EPA must prepare a regulatory flexibility analysis assessing the impact of any proposed or final rule on small entities. 5 U.S.C. 603 and 604. Alternatively, EPA may certify that the rule will not have a significant impact on a substantial number of small entities. Small entities include small businesses, small not-for-profit enterprises, and government entities with jurisdiction over populations of less than 50,000.

Under sections 202, 203, and 205 of the Unfunded Mandates Reform Act of 1995 (''Unfunded Madates Act''), signed into law on March 22, 1995, EPA must undertake various actions in association with proposed or final rules that include a Federal mandate that may result in estimated costs of $100 million or more to the private sector, or to State, local, or tribal governments in the aggregate.

Through submission of this state implementation plan or plan revision, the State and any affected local or tribal governments have elected to adopt the program provided for under Section 110 of the Clean Air Act. These rules may bind State, local and tribal governments to perform certain actions and also require the private sector to perform certain duties. To the extent that the rules being approved by this action will impose no new requirements; such sources are already subject to these regulations under State law. Accordingly, no additional costs to State, local, or tribal governments, or to the private sector, result from this action. EPA has also determined that this final action does not include a mandate that may result in estimated costs of $100 million or more to State, local, or tribal governments in the aggregate or to the private sector.

The OMB has exempted this action from review under Executive Order 12866.

SIP approvals under section 110 and subchapter I, part D of the CAA do not create any new requirements, but simply approve requirements that the State is already imposing. Therefore, because the federal SIP-approval does not impose any new requirements, I certify that it does not have a significant impact on any small entities affected. Moreover, due to the nature of the federal-state relationship under the CAA, preparation of a regulatory flexibility analysis would constitute federal inquiry into the economic reasonableness of state action. The CAA forbids EPA to base its actions concerning SIPs on such grounds. *Union Electric Co.* v. *U.S. E.P.A.*, 427 U.S. 246, 256–66 (S.Ct. 1976); 42 U.S.C. 7410(a)(2).

This action has been classified as a Table 3 action for signature by the Regional Administrator under the procedures published in the Federal Register on January 19, 1989 (54 FR 2214–2225), as revised by a July 10, 1995 memorandum from Mary Nichols, Assistant Administrator for Air and Radiation. The Office of Management and Budget (OMB) has exempted this regulatory action from review under Executive Order 12866.

Nothing in this action should be construed as permitting or allowing or establishing a precedent for any future request for revision to any State implementation plan. Each request for revision to the State implementation plan shall be considered separately in light of specific technical, economic, and environmental factors and in relation to relevant statutory and regulatory requirements.

Under section 307(b)(1) of the Clean Air Act, petitions for judicial review of this action must be filed in the United States Court of Appeals for the appropriate circuit by April 15, 1996. Filing a petition for reconsideration by the Administrator of this final rule does not affect the finality of this rule for the purposes of judicial review nor does it extend the time within which a petition for judicial review may be filed, and shall not postpone the effectiveness of such rule or action. This action may not be challenged later in proceedings to enforce its requirements. (See section 307(b)(2).)

List of Subjects in 40 CFR Part 52

Environmental protection, Air pollution control, Carbon monoxide, Hydrocarbons, Incorporation by reference, Nitrogen dioxide, Ozone, Particulate matter, Reporting and recordkeeping requirements, Sulfur oxides.

Note: Incorporation by reference of the State Implementation Plan for the State of Maine was approved by the Director of the Federal Register on July 1, 1982.

Dated: September 25, 1995.

John P. DeVillars,

Regional Administrator, Region I.

Part 52 of chapter I, title 40 of the Code of Federal Regulations is amended as follows:

PART 52—[AMENDED]

1. The authority citation for part 52 continues to read as follows:

Authority: 42 U.S.C. 7401–7671q.

Subpart U—Maine

2. Section 52.1020 is amended by adding paragraph (c)(37) to read as follows:

§ 52.1020 Identification of plan

* * * * *

(c) * * *

(37) Revisions to the State Implementation Plan submitted by the Maine Department of Environmental Protection on July 12, 1994.

(i) Incorporation by reference.

(A) Letter from the Maine Department of Environmental Protection dated July 5, 1994 submitting a revision to the Maine State Implementation Plan.

(B) Maine's Chapter 100 entitled, ''Definition Regulations.'' This regulation was effective in the State of Maine on July 11, 1994.

(C) Maine's Chapter 113 entitled, ''Growth Offset Regulation.'' This regulation was effective in the State of Maine on July 11, 1994.

(D) Maine's Chapter 115 entitled, ''Emission License Regulation,'' except for Section 115(VII)(E) of this Chapter and all references to this Section. This regulation was effective in the State of Maine on July 11, 1994.

(ii) Additional materials.

(A) Nonregulatory portions of the State submittal.

3. In § 52.1031 Table 52.1031 is amended by adding new entries to the end of existing state citations for Chapters 100, 113 and 115 to read as follows:

§ 52.1031 EPA-approved Maine regulations.

* * * * *

TABLE 52.1031—EPA-APPROVED RULES AND REGULATIONS

State citation	Title/subject	Date adopted by State	Date approved by EPA	Federal Register citation	52.1020	
*	*	*	*	*	*	*
100	Definitions Regulation.	6/22/94	2/14/96	[Insert FR citation from published date].	(c)(37)	Addition of 1990 Part D NSR and other CAAA requirements.
*	*	*	*	*	*	*
113	Growth Offset Regulation.	6/22/94	2/14/96	[Insert FR citation from published date].	(c)(37)	Addition of 1990 Part D NSR requirements.
*	*	*	*	*	*	*
115	Emission License Regulation.	6/22/94	2/14/96	[Insert FR citation from published date].	(c)(37)	Addition of 1990 Part D NSR and other CAAA requirements.
*	*	*	*	*	*	*

§ 52.1026 [Amended]

4. § 52.1026 is amended by adding the words ''as amended by the CAAA of 1990.'' to the last sentence.

[FR Doc. 96–3235 Filed 2–13–96; 8:45 am]

BILLING CODE 6560–50–P

40 CFR Part 52

[MI40–01–6998a; FRL–5418–1]

Approval and Promulgation of Implementation Plan; Michigan

AGENCY: United States Environmental Protection Agency (USEPA).

ACTION: Direct final rule.

SUMMARY: This notice approves a revision to the Michigan State Implementation Plan (SIP) to meet the requirements of the USEPA transportation conformity rule set forth at 40 CFR part 51, subpart T—Conformity to State or Federal Implementation Plans of Transportation Plans, Programs, and Projects Developed, Funded or Approved Under Title 23 U.S.C. or the Federal Transit Act. The transportation conformity SIP revision will enable the State of Michigan to implement and enforce the Federal transportation conformity requirements at the State or local level in accordance with 40 CFR 51.396(b). This notice of approval is limited only to 40 CFR part 51, subpart T (transportation conformity). SIP revisions submitted under 40 CFR part 51, subpart W, relating to conformity of general Federal actions, will be addressed in a separate USEPA notice. This notice provides the rationale for this approval and other information.

DATES: This ''direct final'' is effective April 15, 1996, unless USEPA receives adverse or critical comments by March 15, 1996. If the effective date is delayed, timely notice will be published in the Federal Register.

ADDRESSES: Copies of the SIP revision, public comments and USEPA's responses are available for inspection at the following address: United States Environmental Protection Agency, Region 5, Air and Radiation Division, 77 West Jackson Boulevard, Chicago, Illinois 60604. (It is recommended that you telephone Michael Leslie at (312) 353–6680 before visiting the Region 5 Office.)

A copy of this SIP revision is available for inspection at the following location: Office of Air and Radiation (OAR) Docket and Information Center (Air Docket 6102), room M1500, United States Environmental Protection Agency, 401 M Street SW., Washington, D.C. 20460, (202) 260–7548.

FOR FURTHER INFORMATION CONTACT: Michael G. Leslie, Regulation Development Section (AT–18J), Air Toxics and Radiation Branch, Air and Radiation Division, United States Environmental Protection Agency, Region 5, 77 West Jackson Boulevard, Chicago, Illinois 60604, Telephone Number (312) 353–6680.

SUPPLEMENTARY INFORMATION:

I. Background

Section 176(c) of the Clean Air Act (CAA), 42 U.S.C. 7506(c), provides that no Federal department, agency, or instrumentality shall engage in, support in any way or provide financial assistance for, license or permit, or approve any activity which does not conform to a SIP which has been approved or promulgated pursuant to the CAA. Conformity is defined as conformity to the SIP's purpose of eliminating or reducing the severity and number of violations of the National Ambient Air Quality Standards and achieving expeditious attainment of such standards, and that such activities will not: (1) Cause or contribute to any new violation of any standard in any area, (2) increase the frequency or severity of any existing violation of any standard in any area, or (3) delay timely attainment of any standard or any required interim emission reductions or other milestones in any area.

Section 176(c)(4)(A) of the CAA requires USEPA to promulgate criteria and procedures for determining conformity of all Federal actions (transportation and general) to applicable SIPs. The USEPA published the final transportation conformity rules in the November 24, 1993, Federal Register and codified them at 40 CFR part 51, subpart T—Conformity to State or Federal Implementation Plans of Transportation Plans, Programs, and Projects Developed, Funded or Approved Under Title 23 U.S.C. or the Federal Transit Act. The conformity

rules require States and local agencies to adopt and submit to the USEPA a transportation conformity SIP revision not later than November 24, 1994. This notice does not address the conformity requirements applicable to general Federal actions which are set forth at 40 CFR part 51, subpart W. The USEPA will take action on SIP revisions relating to those requirements in a separate notice.

II. Evaluation of the State's Submittal

Pursuant to the requirements under section 176(c)(4)(C) of the CAA, the Michigan Department of Natural Resources (MDNR) submitted a SIP revision to the USEPA on November 24, 1994. The USEPA found this submittal was complete on April 13, 1995. In its submittal, the State included provisions required by the USEPA transportation conformity rule (40 CFR part 51, subpart T), Memorandum of Agreement (MOA) between the affected agencies, and Metropolitan Planning Organization (MPO) resolutions.

Transportation conformity is required for all areas which are designated nonattainment or maintenance for any transportation related criteria pollutants. The State of Michigan currently has 25 areas designated ozone nonattainment, and one ozone maintenance area. The areas for which transportation conformity determinations are required and which are included as part of Michigan's submittal include the following nonurbanized counties: Allegan, Barry, Branch, Cass, Gratiot, Hillsdale, Huron, Ionia, Lenawee, Lapeer, Montcalm, Saint Joseph, Sanilac, Shiwassee, Tuscola, Van Buren. Urbanized areas include: Battle Creek Metropolitan Statistical Area (MSA) (Calhoun County), Benton Harbor MSA (Berrien County), Detroit-Ann Arbor Consolidated MSA (Livingston, Macomb, Monroe, Oakland, St. Clair, Washtenaw, and Wayne Counties which are ozone maintenance), Flint MSA (Genesee County), Grand Rapids MSA (Kent and Ottawa Counties), Jackson MSA (Jackson County), Kalamazoo MSA (Kalamazoo County), Lansing-East Lansing MSA (Clinton, Eaton, and Ingham Counties), Muskegon MSA (Muskegon County), and Saginaw-Bay City-Midland MSA (Bay, Midland, and Saginaw Counties). In addition to the ozone nonattainment and maintenance areas, portions of three counties (Wayne, Oakland, and Macomb) are designated carbon monoxide nonattainment.

The MDNR held a public hearing on its transportation conformity submittal on October 21, 1994. One comment was received by MDNR and that comment was addressed in the submittal.

The consultation section of the USEPA transportation conformity rule (40 CFR 51.402) requires that the SIP revision include procedures for interagency consultation among the Federal, State, and local agencies and for resolution of conflicts in accordance with the criteria set forth in 40 CFR 51.402. Specifically, the SIP revision must include processes and procedures to be undertaken by Metropolitan Planning Organizations (MPO), State departments of transportation, and the United States Department of Transportation (USDOT) with State and local air quality agencies and USEPA before making a conformity determination, and by State and local air quality agencies and USEPA with MPOs, State departments of transportation, and USDOT in developing applicable SIPs.

In order to satisfy these requirements, the MDNR developed an ad hoc multi-agency committee, the Inter-agency Work Group (IAWG), which included representatives from the MDNR, Michigan Department of Transportation (MDOT), USDOT, and MPOs. The IAWG developed the final consultation rule by integrating the requirements of 40 CFR 51.402 and 23 CFR 450 with the local procedures and processes. Michigan's final consultation rule outlines the roles and responsibilities of each of the affected agencies for the process for determining conformity. The consultation rule further outline the procedures for conflict resolution in the transportation conformity process, for implementation of the public participation process, and for the submission of documentation relating to a conformity determination. The conformity SIP revision submitted by Michigan has adequately addressed all provisions of 40 CFR 51.402 and thus meets the USEPA SIP requirements.

Section 51.396 of the transportation conformity rule states that to be approvable by the USEPA, the SIP revision submitted to USEPA must address all requirements of the transportation conformity rule in a manner which gives them full legal effect. In particular, the revision must incorporate the provisions of the following sections of the rule in verbatim form, except insofar as needed to give effect to a stated intent in the revision to establish criteria and procedure more stringent than the requirements stated in these sections: 51.392, 51.394, 51.398, 51.400, 51.404, 51.410, 51.412, 51.414, 51.416, 51.418, 51.420, 51.422, 51.424, 51.426, 51.428, 51.430, 51.432, 51.434, 51.436, 51.438, 51.440, 51.442, 51.444, 51.446, 51.448, 51.450, 51.460, and 51.462. The State of Michigan incorporated into the SIP revision submittal all of the above sections in verbatim form.

On August 7, 1995, USEPA finalized an amendment to section 51.448. It should be noted that additional sections of the conformity rule are scheduled to be amended. The USEPA can not approve sections into the SIP where inconsistencies exist between the submittal and the final rule. Following these rule changes, the State of Michigan will be required to update the SIP to address the rule changes.

The MDNR, after consulting with the Michigan Attorney General, correctly concluded that this SIP revision will be enforceable pursuant to Michigan statutory law. Section 336.15 of the Michigan Compiled Laws (MCL), MSA § 14.58(5)(1965 Mich. Pub. Acts 348), authorizes MDNR: to promulgate rules to establish standards for ambient air quality and for emissions (including SIPs); to institute a civil action to compel compliance with such rules; to cooperate with USEPA with respect to the control of air pollution; and to take other actions necessary to enforce such rules. Section 336.26d of MCL, MSA § 14.58(16d)(1965 Mich. Pub. Acts 348), provides for the assessment of penalties by MDNR for SIP violations and Section 336.26e of MCL, MSA § 14.58(16e)(1965 Mich. Pub. Acts 348), authorizes the attorney general to seek both penalties and injunctive relief for such violations.

Additional enforcement authority is found in MCL § 691.1202, MSA § 14.528(202)(1970 PA 127), which authorizes the attorney general, any political subdivision of the State, any instrumentality or agency of the State, or any person or legal entity to bring a civil action for declaratory and equitable relief for the protection of the air from pollution, impairment or destruction. In determining whether a violation has occurred or is likely to occur, the court may adopt standards set forth in a SIP or may adopt another standard.

In addition, the MOA, which is the binding agreement among all of the affected agencies and which outlines each agency's roles and responsibilities in the transportation conformity process, contains an agreement by each agency to comply with the requirements of the federal transportation conformity rule. A total of 13 MOAs were included in the SIP revision: 12 MOAs between the local MPO, MDOT and MDNR for the 10 metropolitan areas, and one MOA between MDOT and MDNR for the remaining rural areas.

III. USEPA Action

The USEPA is approving the transportation conformity SIP revision for the State of Michigan. The USEPA has evaluated this SIP revision and has determined that the State has fully adopted the provisions of the Federal transportation conformity rules in accordance with 40 CFR part 51 subpart T. The appropriate public participation and comprehensive interagency consultations have been undertaken during development and adoption of this SIP revision. Because USEPA considers this action to be noncontroversial and routine, USEPA is approving it without prior proposal. This action will become effective on April 15, 1996. However, if we receive adverse comments by March 15, 1996, USEPA will publish a notice that withdraws this action.

IV. Miscellaneous

A. Applicability to Future SIP Decisions

Nothing in this action should be construed as permitting, allowing or establishing a precedent for any future request for revision to any SIP. The USEPA shall consider each request for revision to the SIP in light of specific technical, economic, and environmental factors and in relation to relevant statutory and regulatory requirements.

B. Executive Order 12866

This action has been classified as a Table 3 action for signature by the Regional Administrator under the procedures published in the Federal Register on January 19, 1989 (54 FR 2214–2225), as revised by a July 10, 1995 memorandum from Mary Nichols, Assistant Administrator for Air and Radiation. The Office of Management and Budget has exempted this regulatory action from E.O. 12866 review.

C. Regulatory Flexibility

Under the Regulatory Flexibility Act, 5 U.S.C. 600 *et seq.*, USEPA must prepare a regulatory flexibility analysis assessing the impact of any proposed or final rule on small entities (5 U.S.C. 603 and 604). Alternatively, USEPA may certify that the rule will not have a significant impact on a substantial number of small entities. Small entities include small businesses, small not-for-profit enterprises, and government entities with jurisdiction over populations of less than 50,000.

This approval does not create any new requirements. Therefore, I certify that this action does not have a significant impact on any small entities affected. Moreover, due to the nature of the Federal-State relationship under the Act, preparation of the regulatory flexibility analysis would constitute Federal inquiry into the economic reasonableness of the State action. The Act forbids USEPA to base its actions concerning SIPs on such grounds. *Union Electric Co.* v. *U.S. E.P.A.*, 427 U.S. 246, 256–66 (1976).

Under section 202 of the Unfunded Mandates Reform Act of 1995 (''Unfunded Mandates Act''), signed into law on March 22, 1995, the USEPA must prepare a budgetary impact statement to accompany any proposed or final rule that includes a Federal mandate that may result in estimated costs to State, local, or tribal governments in the aggregate; or to the private sector, of $100 million or more. Under section 205, the USEPA must select the most cost-effective and least burdensome alternative that achieves the objectives of the rule and is consistent with statutory requirements. section 203 requires the USEPA to establish a plan for informing and advising any small governments that may be significantly or uniquely impacted by the rule.

The USEPA has determined that the approval action promulgated today does not include a Federal mandate that may result in estimated costs of $100 million or more to either State, local, or tribal governments in the aggregate, or to the private sector.

This Federal action approves pre-existing requirements under State or local law, and imposes no new Federal requirements. Accordingly, no additional costs to State, local, or tribal governments, or the private sector, result from this action.

D. Petitions for Judicial Review

Under section 307(b)(1) of the Act, petitions for judicial review of this action must be filed in the United States Court of Appeals for the appropriate circuit by April 15, 1996. Filing a petition for reconsideration by the Administrator of this final rule does not affect the finality of this rule for the purposes of judicial review, nor does it extend the time within which a petition for judicial review may be filed and shall not postpone the effectiveness of such rule or action. This action may not be challenged later in proceedings to enforce its requirements (see section 307(b)(2)).

List of Subjects in 40 CFR Part 52

Environmental protection, Air pollution control, Carbon monoxide, Hydrocarbons, Intergovernmental relations, Ozone, Transportation conformity, Transportation-air quality planning, Volatile organic compounds.

Dated: January 23, 1996.

Valdas V. Adamkus,

Regional Administrator.

40 CFR part 52 is amended as follows:

PART 52—[AMENDED]

Subpart X—Michigan

1. The authority citation for part 52 continues to read as follows:

Authority: 42 U.S.C 7401–7671q.

2. Section 52.1174 is amended by adding paragraph (m) to read as follows:

§ 52.1174 Control strategy: Ozone.

* * * * *

(m) Approval—On November 24, 1994, the Michigan Department of Natural Resources submitted a revision to the ozone State Implementation Plan. The submittal pertained to a plan for the implementation and enforcement of the Federal transportation conformity requirements at the State or local level in accordance with 40 CFR part 51 subpart T—Conformity to State or Federal Implementation Plans of Transportation Plans, Programs, and Projects Developed, Funded or Approved Under Title 23 U.S.C. or the Federal Transit Act.

3. Section 52.1185 is added to read as follows:

§ 52.1185 Control strategy: Carbon Monoxide.

(a) Approval—On November 24, 1994, the Michigan Department of Natural Resources submitted a revision to the carbon monoxide State Implementation Plan. The submittal pertained to a plan for the implementation and enforcement of the Federal transportation conformity requirements at the State or local level in accordance with 40 CFR part 51, subpart T—Conformity to State or Federal Implementation Plans of Transportation Plans, Programs, and Projects Developed, Funded or Approved Under Title 23 U.S.C. or the Federal Transit Act.

(b) (reserved).

[FR Doc. 96–3328 Filed 2–13–96; 8:45 am]

BILLING CODE 6560–50–P

---

40 CFR Part 52

[MA42–1–7174a; A–1–FRL–5329–5]

Approval and Promulgation of Air Quality Implementation Plans; Massachusetts; Automotive Refinishing

AGENCY: Environmental Protection Agency (EPA).

ACTION: Direct final rule.

SUMMARY: EPA is approving a State Implementation Plan (SIP) revision submitted by the Commonwealth of Massachusetts. This revision establishes VOC emission standards for automotive refinishing. The intended effect of this action is to approve a revision to Massachusetts SIP which reduces VOC emissions from automotive refinishing. This action is being taken in accordance with Section 183(e) of the Clean Air Act.

DATES: This action is effective April 15, 1996, unless notice is received by March 15, 1996 that adverse or critical comments will be submitted. If the effective date is delayed, timely notice will be published in the Federal Register.

ADDRESSES: Comments may be mailed to Susan Studlien, Deputy, Office of Ecosystems Protection, U.S. Environmental Protection Agency, Region I, JFK Federal Building, Boston, MA 02203. Copies of the documents relevant to this action are available for public inspection during normal business hours, by appointment at the Office of Ecosystems Protection, U.S. Environmental Protection Agency, Region I, One Congress Street, 10th floor, Boston, MA; Air and Radiation Docket and Information Center, U.S. Environmental Protection Agency, 401 M Street SW. (LE–131), Washington, D.C. 20460; and the Division of Air Quality Control, Department of Environmental Protection, One Winter Street, 8th Floor, Boston, MA 02108.

FOR FURTHER INFORMATION CONTACT: Jeanne Cosgrove, (617) 565–3246.

SUPPLEMENTARY INFORMATION: Under section 183(a) of the Clean Air Act, EPA was required to issue a control techniques guideline (CTG) for the category of autobody refinishing. However, EPA has instead issued guidance for this category in the form of an Alternative Control Technology (ACT) guideline. While the ACT does not define reasonably available control technology (RACT) standards for autobody refinishing, it does include three control options with estimates of costs and emission reductions for each option. In addition to the section 183(a) requirements, Section 183(e) of the CAA, requires EPA to issue national VOC emissions standards for consumer and commercial products, which include automotive refinishing coatings. EPA expects to propose the national rule for automotive refinishing coatings in the fall of 1995. Massachusetts decided to adopt rules for autobody refinishing in advance of a federal rule, to get credit for reductions from this category in its 15% plan.

Massachusetts was required to submit, by November 15, 1993, a SIP revision for Reasonable Further Progress (RFP) for 15% reduction of VOCs as necessary for moderate areas and above. The entire state of Massachusetts is classified as serious nonattainment area, therefore the 15% plan must cover the entire state.

On August 18, 1994, the Massachusetts DEP submitted to EPA for comment, proposed amendments to the SIP to address the RFP requirements including new air pollution control regulations 7.18(28) ''autobody refinishing.'' Massachusetts held public hearings during May 6–13, 1994 and on September 22 and 23, 1994 throughout the State for its proposed automotive refinishing rule. EPA submitted written comments regarding the proposed regulations on September 22, 1994. The rule was effective on December 16, 1994, upon publication in the Massachusetts Register.

On January 9, 1995, the Commonwealth of Massachusetts submitted a formal revision to its State Implementation Plan (SIP). The SIP revision amends 310 CMR 7.00 by adding Section 310 CMR 7.18(28) autobody refinishing.

The adopted regulation 310 CMR 7.18(28), ''autobody refinishing,'' regulates the VOC content of automotive refinishing products. The regulation applies to any person who sells, offers for sale, or manufactures autobody refinishing coatings for sale within Massachusetts or who owns, leases, operates or controls an automotive refinishing facility.

Summary of SIP Revision

The adopted air pollution control regulation , 310 CMR 7.18(28) ''autobody refinishing'', establishes Reasonably Available Control Technology for all automobile refinishing facilities. Automotive Refinishing facility'' is defined by Massachusetts as ''any facility at which the interior or exterior bodies of automobiles, motorcycles, light/medium-duty trucks, or vans are painted. Refinishing of aftermarket vehicles and new vehicles damaged in transit before their initial sale are included under this definition.'' The rule established the following RACT emission limits, expressed as pounds of VOC per gallon of coating and grams of VOC per liter of coating, excluding water and exempt solvents:

TABLE 7.18(28)(c).—RACT EMISSION LIMITATIONS FOR AUTOMOTIVE REFINISHING PRODUCTS

Coating type	VOC Emission limitation	
	grams/liter	lbs/gal
Pretreatment Wash Primer	780	6.5
Primer/primer Surfacer	575	4.8
Primer Sealer	550	4.6
Topcoat	600	5.0
Three or Four-Stage Topcoat	620	5.2
Specialty Coating	840	7.0

The rule gives facilities the option of complying through the use of compliant coatings, or by installing emission control systems that result in VOC emissions less than or equal to the limits specified in Table 7.18(28)(c). The rule also contains the following provisions:

1. *Good housekeeping Requirements* to minimize solvent evaporation);

2. *Equipment Requirements* that specify the use of High volume Low Pressure spray equipment and require spray gun cleaning and solvent storage in a manner that limit solvent evaporation; and

3. *Training, recordkeeping, reporting, biennial compliance certification requirements.*

Facilities are required to comply with the regulation by August 1, 1995.

EPA's evaluation is detailed in a memorandum, entitled ''Technical Support Document for Massachusetts Air Pollution Control Regulation, 310 CMR 7.18(28), Automotive Refinishing.''

EPA is publishing this action without prior proposal because the Agency views this as a noncontroversial amendment and anticipates no adverse comments. However, in a separate document in this Federal Register publication, EPA is proposing to approve the SIP revision should adverse or critical comments be filed. This action will be effective April 15, 1996 unless adverse or critical comments are received by March 15, 1996.

If the EPA receives such comments, this action will be withdrawn before the effective date by simultaneously publishing a subsequent notice that will withdraw the final action. All public comments received will then be addressed in a subsequent final rule based on this action serving as a proposed rule. The EPA will not institute a second comment period on this action. Any parties interested in commenting on this action should do so at this time. If no such comments are

received, the public is advised that this action will be effective on April 15, 1996.

Final Action

EPA is approving Section 310 CMR 7.18(28) Automotive refinishing.

Under the Regulatory Flexibility Act, 5 U.S.C. 600 *et seq.*, EPA must prepare a regulatory flexibility analysis assessing the impact of any proposed or final rule on small entities. 5 U.S.C. 603 and 604. Alternatively, EPA may certify that the rule will not have a significant impact on a substantial number of small entities. Small entities include small businesses, small not-for-profit enterprises, and government entities with jurisdiction over populations of less than 50,000.

Under Sections 202, 203, and 205 of the Unfunded Mandates Reform Act of 1995 (''Unfunded Mandates Act''), signed into law on March 22, 1995, EPA must undertake various actions in association with proposed or final rules that include a Federal mandate that may result in estimated costs of $100 million or more to the private sector, or to State, local, or tribal governments in the aggregate.

Through submission of this state implementation plan or plan revision, the State and any affected local or tribal governments have elected to adopt the program provided for under Section 183(e) of the Clean Air Act. These rules may bind State, local and tribal governments to perform certain actions and also require the private sector to perform certain duties. To the extent that the rules being approved by this action will impose no new requirements; such sources are already subject to these regulations under State law. Accordingly, no additional costs to State, local, or tribal governments, or to the private sector, result from this action. EPA has also determined that this final action does not include a mandate that may result in estimated costs of $100 million or more to State, local, or tribal governments in the aggregate or to the private sector.

This action has been classified as a Table 3 action by the Regional Administrator under the procedures published in the Federal Register on January 19, 1989 (54 FR 2214–2225), as revised by an October 4, 1993, memorandum from Michael H. Shapiro, Acting Assistant Administrator for Air and Radiation. A future document will inform the general public of these tables.

The OMB has exempted this action from review under Executive Order 12866.

SIP approvals under section 110 and subchapter I, Part D of the CAA do not create any new requirements, but simply approve requirements that the State is already imposing. Therefore, because the federal SIP-approval does not impose any new requirements, I certify that it does not have a significant impact on any small entities affected. Moreover, due to the nature of the federal-state relationship under the CAA, preparation of a regulatory flexibility analysis would constitute federal inquiry into the economic reasonableness of state action. The CAA forbids EPA to base its actions concerning SIPs on such grounds. *Union Electric Co.* v. *U.S. E.P.A.*, 427 U.S. 246, 256–66 (S.Ct. 1976); 42 U.S.C. 7410 (a)(2).

On January 6, 1989, the Office of Management and Budget (OMB) waived Table 2 and Table 3 revisions (54 FR 2222) from the requirements of Section 3 of Executive Order 12291 for a period of two years. EPA has submitted a request for a permanent waiver for Table 2 and Table 3 SIP revisions. OMB has agreed to continue the temporary waiver until such time as it rules on EPA's request.

Nothing in this action should be construed as permitting or allowing or establishing a precedent for any future request for revision to any State implementation plan. Each request for revision to the State implementation plan shall be considered separately in light of specific technical, economic, and environmental factors and in relation to relevant statutory and regulatory requirements.

Under section 307(b)(1) of the Clean Air Act, petitions for judicial review of this action must be filed in the United States Court of Appeals for the appropriate circuit by April 15, 1996. Filing a petition for reconsideration by the Administrator of this final rule does not affect the finality of this rule for the purposes of judicial review nor does it extend the time within which a petition for judicial review may be filed, and shall not postpone the effectiveness of such rule or action. This action may not be challenged later in proceedings to enforce its requirements. (See section 307(b)(2).)

List of Subjects in 40 CFR Part 52

Environmental protection, Air pollution control, Hydrocarbons, Incorporation by reference, Intergovernmental relations, Ozone, Reporting and recordkeeping requirements.

Note: Incorporation by reference of the State Implementation Plan for the Commonwealth of Massachusetts was approved by the Director of the Federal Register on July 1, 1982.

Dated: October 6, 1995.

John P. DeVillars,

Regional Administrator, EPA New England.

Part 52 of chapter I, title 40 of the Code of Federal Regulations is amended as follows:

PART 52—[AMENDED]

1. The authority citation for part 52 continues to read as follows:

Authority: 42 U.S.C. 7401–7671q.

Subpart W—Massachusetts

2. Section 52.1120 is amended by adding paragraph (c)(109) to read as follows:

§ 52.1120 Identification of plan.

* * * * *

(c) * * *

(109) Revisions to the State Implementation Plan submitted by the Massachusetts Department of Environmental Protection on January 9, 1995.

(i) Incorporation by reference.

(A) Letter from the Massachusetts Department of Environmental Protection, dated January 9, 1995, submitting a revision to the Massachusetts State Implementation Plan.

(B) The following portions of the Rules Governing the Control of Air Pollution for the Commonwealth of Massachusetts effective on December 16, 1994: 310 Code of Massachusetts Regulations Section 7.18(28) Automotive Refinishing.

3. In § 52.1167 Table 52.1167 is amended by adding and new entry (28) to the end of entry 310 CMR 718 to read as follows:

§ 52.1167 EPA—approved Massachusetts State regulations.

* * * * *

TABLE 52.1167.—EPA—APPROVED MASSACHUSETTS REGULATIONS

State citation	Title/subject	Date submitted by State	Date approved by EPA	Federal Register citation	52.1120(c)	Comments/unapproved sections
*	*	*	*	*	*	*
310 CMR 7.18(28) .	Automotive Refinishing.	01/09/95	February 14, 1996	Supply Page	109	Reasonably Available Control Technology Requirement (RACT) for automotive refinishing.
*	*	*	*	*	*	*

[FR Doc. 96–3237 Filed 2–13–96; 8:45 am]

BILLING CODE 6560–50–P

40 CFR Part 52

[NE–9–1–7220a; FRL–5409–6]

Approval and Promulgation of Implementation Plans and Approval of 112(l) Authority; Lincoln-Lancaster County Health Department (LLCHD) and City of Omaha (Nebraska)

AGENCY: Environmental Protection Agency (EPA).

ACTION: Direct final rule.

SUMMARY: This final action approves the State Implementation Plan (SIP) submitted by the state of Nebraska on behalf of the two local air pollution control agencies. The state has an approved program (published in the Federal Register on January 4, 1995), and the local agencies have adopted the same regulatory framework in order to issue Federally enforceable Class II permits. This request is sound, since the local agencies will administer independent Title V programs and should also offer relevant sources the alternative Class II permits. Furthermore, all applicable sources in the state (and in the local agencies' jurisdiction) are already subject to the requirements of the Class II operating permit program. Therefore, the only practical change created by this SIP revision for sources in Omaha or Lincoln-Lancaster County is that these Class II permits will be issued by the local agencies instead of the state.

This revision includes the creation of a Class II operating permit program and adopts the state's Part D (nonattainment) new source review rule changes, SO_2 rule corrections, and provisions for compliance and enforcement information. These revisions are identical to those adopted by the state and have been approved by EPA in the January 4, 1995 Federal Register. The EPA's rationale for that approval is contained in the cited Federal Register document and in the ''Technical Support Document (TSD) for a Revision to the Nebraska SIP and Request for Approval under Section 112(l)'' dated August 12, 1994, which is also part of the rationale for this approval.

The creation of a Class II operating permit program enables the local agencies, like the state, to have a Federally enforceable program for sources not covered by the requirements for Title V sources under the Clean Air Act Amendments of 1990 and part 70 of the Code of Federal Regulations (CFR), and for sources not subject to Title V because they are able to obtain a Class II permit.

DATES: This action is effective April 15, 1996 unless by March 15, 1996 adverse or critical comments are received.

ADDRESSES: Copies of the documents relevant to this action are available for public inspection during normal business hours at the: Environmental Protection Agency, Air Planning and Development Branch, 726 Minnesota Avenue, Kansas City, Kansas 66101; and EPA Air and Radiation Docket and Information Center, 401 M Street SW., Washington, DC 20460.

FOR FURTHER INFORMATION CONTACT: Christopher D. Hess at (913) 551–7213.

SUPPLEMENTARY INFORMATION: In February 1994, the state of Nebraska submitted an SIP revision to create a Class II operating permit program for sources not otherwise subject to Title V which became effective on March 6, 1995. Thereafter, the two local agencies adopted the state's regulations in order to create Class II operating permit programs in their respective jurisdictions as well.

Specifically, the LLCHD has used Title 129 (Nebraska's Air Quality Regulations) to create the ''Lincoln-Lancaster County Air Pollution Control Program'' (adopted May 16, 1995), but uses a different reference system (article and section) instead of Title 129's system of chapter and section. Nevertheless, the content of the local program rules as it applies to operating permits is identical to Title 129. The city of Omaha has incorporated the state's regulation by reference (adopted March 23, 1995).

Following the adoption of these rules, the state submitted a request on May 31, 1995, on behalf of LLCHD to completely replace the LLCHD portion of the SIP with the regulations cited above to create a Federally enforceable Class II program. On June 2, 1995, the state submitted a similar request on behalf of the city of Omaha for the same purpose. The state has also requested approval of these programs pursuant to section 112(l) of the Act, which governs state programs for regulation of hazardous air pollutants (HAP).

Since the local agencies use the same regulatory basis as the state's, and this revision merely enables the local agencies to administer the requirements that sources in their jurisdictions are already subject to, this notice does not duplicate the topics addressed at 60 FR 372–375 published in the Federal Register on January 4, 1995. The reader may consult that notice for a review of the provisions for which the EPA has already provided analysis and determined approvability. In summary, EPA reviewed the state, and subsequently the local, Class II programs to determine if they are consistent with the guidance for approval of Federally enforceable state operating permit programs (54 FR 27281, June 28, 1989). EPA determined that the state program is consistent with that guidance, and has now determined that the local programs meet the guidance as well.

Furthermore, the reader may request the TSD for a revision to the Nebraska SIP and request for approval under section 112(l) dated August 12, 1994, for a complete and thorough discussion of the revision as it relates to the state Class II program. The reader may also request the TSD for a revision to the Nebraska SIP creating a Class II Operating Permit Program for the city of Omaha and LLCHD dated September 1, 1995. These documents are available at

the locations stated in the **ADDRESSES** section of this document.

Approval of 112(l) Authority

The state has also requested that the local agencies' operating permits program be approved pursuant to section 112(l) of the Act. By approving the program under this provision, the local agencies may impose requirements for HAPs which are subject to EPA enforcement under the Clean Air Act (CAA). One effect of this rule is that limitations on potential-to-emit hazardous pollutants, issued in accordance with the approved program will be recognized as Federally enforceable by EPA. Thus, sources may voluntarily restrict their potential emissions of HAPs and be issued a Class II permit to avoid the more extensive requirements of Title V.

In order to receive approval, the programs must meet specific criteria for approval under 112(l) which include:

1. Adequate authority within the program to ensure compliance by all sources with each applicable standard, regulation, or requirement established by the Administrator. As part of the state's submittal to create the Class II program, an Attorney General's statement was provided which ensures necessary legal authority and compliance by all sources within the state. The local agencies have also provided statements of adequate authority from their legal counsels.

2. Adequate authority to implement the program. As part of the state's SIP revision, appropriate copies of state statutes, regulations, and other requirements which contain the relevant provisions demonstrating authority to implement and enforce the state rule upon approval have been submitted to the EPA and deemed approvable. The local agencies have also submitted provisions which demonstrate adequate authority to implement the program.

3. Adequate resources to implement the program. Both local agencies have committed to provide adequate resources in resource demonstrations that comprehensively address requirements of the Title V and SIP-based operating permit programs which is inclusive of 112(l) requirements.

4. An expeditious schedule for implementing the program and ensuring compliance by the affected sources. Class II permit applications are due within 12 months of the effective date of the regulations (May 1995).

Based on the review described above, the EPA is approving the Class II operating permit program for the control of air toxics that allow sources to limit their potential to emit of HAPs under section 112(l) of the Act.

Prevention of Significant Deterioration (PSD)

Although the local agencies' adoption of the state's rules include PSD regulations, the EPA herein notes that only the state program includes an approved part 51 program to issue PSD permits. As part of the Class II program, the local agencies will act as agents of the state to administer and enforce requirements applicable under PSD, although only the state will actually issue these permits.

Variances

Both local agencies have the authority to issue a variance from requirements imposed by state or local law based on Nebraska Revised Statute § 81–1513.

However, the EPA has no authority to approve provisions of state and local authority, such as the variance provisions, which are inconsistent with the Act. Thus, any proposed variance must be submitted as a request for a revision to the SIP.

Furthermore, the EPA reserves the right to enforce provisions of the Act where the permitting authority purports to grant relief in a manner inconsistent with the requirements of the Act.

EPA Action

EPA is taking final action to approve revisions submitted May 31 and June 2, 1995, for the LLCHD and city of Omaha, respectively. All revisions discussed in this notice are considered approvable by the EPA. This action also approves the revisions under section 112(l) of the Act for these local programs.

This action does not include several requirements unique to the local programs, such as the regulation of odors, which do not address CAA requirements. These excluded portions are specified in the TSD for this action, dated September 1, 1995.

The EPA is publishing this action without prior proposal because the Agency views this as a noncontroversial amendment and anticipates no adverse comments. However, in a separate document in the Federal Register publication, the EPA is proposing to approve the SIP revision should adverse or critical comments be filed.

If the EPA receives such comments, this action will be withdrawn before the effective date by publishing a subsequent document that will withdraw the final action. All public comments received will then be addressed in a subsequent final rule, based on this action serving as a proposed rule. The EPA will not institute a second comment period on this action. Any parties interested in commenting on this action should do so at this time.

Nothing in this action should be construed as permitting, or allowing or establishing a precedent for any future request for revision to any SIP. Each request for a revision shall be considered separately in light of specific technical, economic, and environmental factors, and in relation to relevant statutory and regulatory requirements.

Under the Regulatory Flexibility Act, 5 U.S.C. 600 et seq., EPA must prepare a regulatory flexibility analysis assessing the impact of any proposed or final rule on small entities (5 U.S.C. 603 and 604). Alternatively, EPA may certify that the rule will not have a significant impact on a substantial number of small entities. Small entities include small businesses, small not-for-profit enterprises, and government entities with jurisdiction over populations of less than 50,000.

SIP approvals under section 110 and subchapter I, Part D of the CAA do not create any new requirements, but simply approve requirements that the state is already imposing. Therefore, because the Federal SIP approval does not impose any new requirements, EPA certifies that it does not have a significant impact on any small entities affected. Moreover, due to the nature of the Federal-state relationship under the CAA, preparation of a regulatory flexibility analysis would constitute Federal inquiry into the economic reasonableness of state action. The CAA forbids EPA to base its actions concerning SIPs on such grounds (*Union Electric Co.* v. *U.S. E.P.A.*, 427 U.S. 246, 256–66 (S.Ct. 1976); 42 U.S.C. 7410(a)(2)).

This action has been classified as a Table 3 action for signature by the Regional Administrator under the procedures published in the Federal Register on January 19, 1989 (54 FR 2214–2225), as revised by a July 10, 1995, memorandum from Mary Nichols, Assistant Administrator for Air and Radiation.

The Office of Management and Budget has exempted this regulatory action from E.O. 12866 review.

Unfunded Mandates

Under sections 202, 203, and 205 of the Unfunded Mandates Reform Act of 1995 (''Unfunded Mandates Act''), signed into law on March 22, 1995, EPA must undertake various actions in association with proposed or final rules that include a Federal mandate that may result in estimated costs of $100 million or more to the private sector, or to state,

local, or tribal governments in the aggregate.

Through submission of this SIP revision, the state has elected to adopt the program provided for under section 110 of the CAA. These rules may bind state and local governments to perform certain actions, and also require the private sector to perform certain duties. To the extent that the rules being finalized for approval by this action will impose new requirements, sources are already subject to these regulations under state law.

Accordingly, no additional costs to state or local governments, or to the private sector, result from this final action. EPA has also determined that this final action does not include a mandate that may result in estimated costs of $100 million or more to state or local governments in the aggregate or to the private sector.

Under section 307(b)(1) of the CAA, petitions for judicial review of this action must be filed in the United States Court of Appeals for the appropriate circuit by April 15, 1996. Filing a petition for reconsideration by the Administrator of this final rule does not affect the finality of this rule for the purposes of judicial review, nor does it extend the time within which a petition for judicial review may be filed, and shall not postpone the effectiveness of such rule or action. This action may not be challenged later in proceedings to enforce its requirements. (See section 307(b)(2).)

List of Subjects in 40 CFR Part 52

Environmental protection, Air pollution control, Carbon monoxide, Hydrocarbons, Incorporation by reference, Intergovernmental relations, Lead, Nitrogen dioxide, Ozone, Particulate matter, Reporting and recordkeeping requirements, Sulfur oxides, Volatile organic compounds.

Dated: December 7, 1995.

William Rice,

Acting Regional Administrator.

Part 52, chapter I, title 40 of the Code of Federal Regulations is amended as follows:

PART 52—[AMENDED]

1. The authority citation for part 52 continues to read as follows:

Authority: 42 U.S.C. 7401–7671q.

Subpart CC—Nebraska

2. Section 52.1420 is amended by adding paragraph (c)(44) to read as follows:

§ 52.1420 Identification of plan.

* * * * *

(c) * * *

(44) On May 31 and June 2, 1995, the Director of the Nebraska Department of Environmental Quality (NDEQ) submitted revisions to the SIP to update the local ordinances of the Lincoln-Lancaster County Health Department and city of Omaha, respectively, and to create Federally enforceable Class II operating permit programs for these agencies.

(i) Incorporation by reference.

(A) 1993 Lincoln-Lancaster County Air Pollution Control Program, Version March 1995, effective May 16, 1995. This includes the following citations: Article I (except Section 6); Article II, Sections 1–12, 14–17, 19–20, 22, 24–25, 32–38; and Appendix I.

(B) Ordinance No. 33102 dated November 2, 1993, which adopts Chapter 41, Article I, Sections 41–4 through 41–6; 41–9; 41–10; Article II, Sections 41–23; 41–27; 41–38; and 41–40 and Article IV of the Omaha Municipal Code. Ordinance No. 33506 dated March 21, 1995, amends Chapter 41, Article I, Sections 41–2 and 41–9 of the Omaha Municipal Code and adopts Title 129, Nebraska Air Quality Regulations, approved December 2, 1994.

(ii) Additional material.

(A) Letter from the city of Omaha dated September 13, 1995, regarding adequate authority to implement section 112(l).

(B) Letter from the NDEQ dated November 9, 1995, regarding rule omissions and PSD.

3. Section 52.1427 is added to read as follows:

§ 52.1427 Operating permits.

Emission limitations and related provisions which are established in the city of Omaha and Lincoln-Lancaster operating permits as Federally enforceable conditions shall be enforceable by EPA. The EPA reserves the right to deem permit conditions not Federally enforceable. Such a determination will be made according to appropriate procedures and be based upon the permit, permit approval procedures, or permit requirement which do not conform with the operating permit program requirements or the requirements of EPA underlying regulations.

[FR Doc. 96–3233 Filed 2–13–96; 8:45 am]

BILLING CODE 6560–50–P

40 CFR Part 52

[CA 95–9–7273a; FRL–5411–1]

Approval and Promulgation of Implementation Plans; California State Implementation Plan Revision, San Diego County Air Pollution Control District

AGENCY: Environmental Protection Agency (EPA).

ACTION: Direct final rule.

SUMMARY: EPA is taking direct final action granting limited approval and limited disapproval of revisions to the California State Implementation Plan (SIP). The revisions concern a rule from the San Diego County Air Pollution Control District (SDCAPCD). The revised rule controls VOC emissions from kelp processing and bio-polymer manufacturing operations. This final action will incorporate this rule into the federally approved SIP. The intended effect of finalizing this action is to regulate emissions of volatile organic compounds (VOCs) in accordance with the requirements of the Clean Air Act, as amended in 1990 (CAA or the Act). Thus, EPA is finalizing a simultaneous limited approval and limited disapproval of the revised rule under CAA provisions regarding EPA action on SIP submittals and general rulemaking authority because the rule, while strengthening the SIP, also does not fully meet the CAA provisions regarding plan submissions and plan requirements for nonattainment areas. As a result of the limited disapproval portion of this action, EPA will be required to impose highway funding or emission offset sanctions under the CAA unless the State submits and EPA approves corrections to the identified deficiencies within 18 months of the effective date of this disapproval. Moreover, EPA will be required to promulgate a Federal Implementation Plan (FIP) unless the deficiencies are corrected within 24 months of the effective date of this disapproval.

EFFECTIVE DATE: This action is effective on April 15, 1996, unless adverse or critical comments are received by March 15, 1996. If the effective date is delayed, a timely notice will be published in the Federal Register.

ADDRESSES: Copies of the rule and EPA's evaluation report for the rule are available for public inspection at EPA's Region IX office during normal business hours. Copies of the submitted rule are also available for inspection at the following locations:

Environmental Protection Agency, Air Docket (6102), 401 ''M'' Street, SW., Washington, DC 20460
San Diego County Air Pollution Control District, 9150 Chesapeake Drive, San Diego, CA 92123–1096
California Air Resources Board, Stationary Source Division, Rule Evaluation Section, 2020 ''L'' Street, Sacramento, CA 95814.

FOR FURTHER INFORMATION CONTACT:

Patricia A. Bowlin, Rulemaking Section (A–5–3), Air and Toxics Division, U.S. Environmental Protection Agency, Region IX, 75 Hawthorne Street, San Francisco, CA 94105–3901, Telephone: (415) 744–1188.

SUPPLEMENTARY INFORMATION:

Applicability

The rule being incorporated into the California SIP is SDCAPCD Rule 67.10, Kelp Processing and Bio-Polymer Manufacturing Operations. This rule was submitted by the California Air Resources Board (CARB) to EPA on July 13, 1994.

Background

On March 3, 1978, EPA promulgated a list of ozone nonattainment areas under the provisions of the Clean Air Act, as amended in 1977 (1977 Act or pre-amended Act), that included the San Diego Area. 43 FR 8964, 40 CFR 81.305. On May 26, 1988, EPA notified the Governor of California, pursuant to section 110(a)(2)(H) of the 1977 Act, that the SDCAPCD's portion of the California SIP was inadequate to attain and maintain the ozone standard and requested that deficiencies in the existing SIP be corrected (EPA's SIP-Call). On November 15, 1990, the Clean Air Act Amendments of 1990 were enacted. Public Law 101–549, 104 Stat. 2399, codified at 42 U.S.C. 7401–7671q. In amended section 182(a)(2)(A) of the CAA, Congress statutorily adopted the requirement that nonattainment areas fix their deficient reasonably available control technology (RACT) rules for ozone and established a deadline of May 15, 1991 for states to submit corrections of those deficiencies.

Section 182(a)(2)(A) applies to areas designated as nonattainment prior to enactment of the amendments and classified as marginal or above as of the date of enactment. It requires such areas to adopt and correct RACT rules pursuant to pre-amended section 172(b) as interpreted in pre-amendment guidance.[1] EPA's SIP-Call used that guidance to indicate the necessary corrections for specific nonattainment areas. San Diego Area is classified as Serious;[2] therefore, this area was subject to the RACT fix-up requirement and the May 15, 1991 deadline.

The State of California submitted many revised RACT rules for incorporation into its SIP on July 13, 1994, including the rule being acted on in this notice. This notice addresses EPA's direct-final action for SDCAPCD Rule 67.10, Kelp Processing and Bio-Polymer Manufacturing Operations. SDCAPCD adopted Rule 67.10 on June 15, 1994. This submitted rule was found to be complete on September 12, 1994 pursuant to EPA's completeness criteria that are set forth in 40 CFR part 51, appendix V[3] and is being finalized for limited approval and limited disapproval into the SIP.

Rule 67.10 controls the emissions of VOCs from kelp processing and bio-polymer manufacturing operations. VOCs contribute to the production of ground level ozone and smog. This rule was originally adopted as part of SDCAPCD's effort to achieve the National Ambient Air Quality Standard (NAAQS) for ozone and has been revised in response to EPA's SIP-Call and the section 182(a)(2)(A) CAA requirement. The following is EPA's evaluation and final action for this rule.

EPA Evaluation and Action

In determining the approvability of a VOC rule, EPA must evaluate the rule for consistency with the requirements of the CAA and EPA regulations, as found in section 110 and part D of the CAA and 40 CFR part 51 (Requirements for Preparation, Adoption, and Submittal of Implementation Plans). The EPA interpretation of these requirements, which forms the basis for today's action, appears in the various EPA policy guidance documents listed in footnote 1. Among those provisions is the requirement that a VOC rule must, at a minimum, provide for the implementation of RACT for stationary sources of VOC emissions. This requirement was carried forth from the pre-amended Act.

For the purpose of assisting state and local agencies in developing RACT rules, EPA prepared a series of Control Technique Guideline (CTG) documents. The CTGs are based on the underlying requirements of the Act and specify the presumptive norms for what is RACT for specific source categories. Under the CAA, Congress ratified EPA's use of these documents, as well as other Agency policy, for requiring States to ''fix-up'' their RACT rules. See section 182(a)(2)(A). For source categories that do not have an applicable CTG (such as kelp processing and bio-polymer manufacturing operations), state and local agencies may determine what controls are required by reviewing the operation of facilities subject to the regulation and evaluating regulations for similar sources in other areas. Within the SDCAPCD there is only one facility that performs kelp processing and bio-polymer manufacturing operations. For this source category, the RACT determination required an evaluation of the manufacturing processes and the emissions specific to this facility. The evaluation also considered the technological and economic feasibility of proposed controls at individual emission points.

Further interpretations of EPA policy are found in the Blue Book, referred to in footnote 1. In general, the EPA policy guidance documents have been set forth to ensure that VOC rules are fully enforceable and strengthen or maintain the SIP.

SDCAPCD's submitted Rule 67.10, Kelp Processing and Bio-Polymer Manufacturing Operations, includes the following revisions from the current SIP:

- Expansion of rule applicability to include pilot plant facilities
- More stringent recordkeeping requirements for claiming exemptions
- Addition of an exemption for any VOC with normal boiling point of 185 °C or greater
- Addition of an exemption for temporary equipment in pilot plants
- Addition of new definitions
- Revision of the VOC definition to eliminate the vapor pressure exemption
- Revision of the fugitive liquid leak definition to three drops per minute, or a visible mist, with greater than 10% by weight VOC
- Deletion of the exemption of presses from fugitive liquid leak provisions
- Revisions to the add-on control efficiency requirements for manufacturing lines and pilot plants

[1] Among other things, the pre-amendment guidance consists of those portions of the proposed Post-1987 ozone and carbon monoxide policy that concern RACT, 52 FR 45044 (November 24, 1987); ''Issues Relating to VOC Regulation Cutpoints, Deficiencies, and Deviations, Clarification to Appendix D of November 24, 1987 Federal Register Notice'' (Blue Book) (notice of availability was published in the Federal Register on May 25, 1988); and the existing control technique guidelines (CTGs).

[2] The San Diego Area retained its designation of nonattainment and was classified by operation of law pursuant to sections 107(d) and 181(a) upon the date of enactment of the CAA. See 55 FR 56694 (November 6, 1991). The San Diego Area was reclassified from Severe-15 to Serious on January 19, 1995, 60 FR 3771.

[3] EPA adopted the completeness criteria on February 16, 1990 (55 FR 5830) and, pursuant to section 110(k)(1)(A) of the CAA, revised the criteria on August 26, 1991 (56 FR 42216).

- Revision to the compliance determination period for add-on control devices
- Deletion of the provision allowing source to appeal conditional approval/disapproval of an operation and maintenance program
- Deletion of the provision allowing the Air Pollution Control Officer to recommend relaxations of the VOC control efficiency requirements for driers and reactors
- Addition of equipment and operational standards to minimize fugitive emissions
- Addition of capture and control requirements for presses and spent pots
- Specification of recordkeeping requirements and test methods for compliance determinations

EPA has evaluated the submitted rule for consistency with the CAA, EPA regulations, and EPA policy and has found that the revisions address and correct many deficiencies previously identified by EPA. These corrected deficiencies have resulted in a clearer, more enforceable rule. Furthermore, the addition of more stringent standards in submitted Rule 67.10 should lead to more emission reductions.

Although SDCAPCD Rule 67.10 will strengthen the SIP, the rule still contains deficiencies which were required to be corrected pursuant to the section 182(a)(2)(A) requirement of Part D of the CAA. The remaining deficiencies include the following:

- Fifty percent by weight VOC fugitive liquid leak standard for incorporators
- No provisions for frequency of monitoring or inspection for fugitive liquid leaks
- No capture efficiency protocol provision
- Determinations of compliance based on shorter test periods than allowed for determinations of non-compliance

Moreover, the submitted rule adds another significant deficiency: an exemption of VOCs based on boiling point. A detailed discussion of rule deficiencies can be found in the Technical Support Document for Rule 67.10 (1/96), which is available from the U.S. EPA's Region IX office. Because of these deficiencies, the rule is not approvable pursuant to section 182(a)(2)(A) of the CAA because it is not consistent with the interpretation of section 172 of the 1977 CAA as found in the Blue Book and may lead to rule enforceability problems.

Because of the above deficiencies, EPA cannot grant full approval of this rule under section 110(k)(3) and Part D. Also, because the submitted rule is not composed of separable parts which meet all the applicable requirements of the CAA, EPA cannot grant partial approval of the rule under section 110(k)(3). However, EPA may grant a limited approval of the submitted rule under section 110(k)(3) in light of EPA's authority pursuant to section 301(a) to adopt regulations necessary to further air quality by strengthening the SIP. The approval is limited because EPA's action also contains a simultaneous limited disapproval. In order to strengthen the SIP, EPA is finalizing a limited approval of SDCAPCD's submitted rule 67.10 under sections 110(k)(3) and 301(a) of the CAA.

At the same time, EPA is also finalizing a limited disapproval of this rule because it contains deficiencies that have not been corrected as required by section 182(a)(2)(A) of the CAA, and, as such, the rule does not fully meet the requirements of Part D of the Act. Under section 179(a)(2), if the Administrator disapproves a submission under section 110(k) for an area designated nonattainment, based on the submission's failure to meet one or more of the elements required by the Act, the Administrator must apply one of the sanctions set forth in section 179(b) unless the deficiency has been corrected within 18 months of such disapproval. Section 179(b) provides two sanctions available to the Administrator: highway funding and offsets. The 18 month period referred to in section 179(a) will begin on the effective date of this final limited disapproval. Moreover, this final limited disapproval triggers the Federal implementation plan (FIP) requirement under section 110(c). It should be noted that the rule covered by this direct final rulemaking has been adopted by the SDCAPCD and is currently in effect in the District. EPA's final limited disapproval action will not prevent the District or EPA from enforcing this rule.

Nothing in this action should be construed as permitting or allowing or establishing a precedent for any future implementation plan. Each request for revision to the state implementation plan shall be considered separately in light of specific technical, economic, and environmental factors and in relation to relevant statutory and regulatory requirements.

EPA is publishing this document without prior proposal because the Agency views this as a noncontroversial amendment and anticipates no adverse comments. However, in a separate document in this Federal Register publication, the EPA is proposing a limited approval and limited disapproval of the SIP revision should adverse or critical comments be filed. This action will be effective April 15, 1996, unless by March 15, 1996, adverse or critical comments are received.

If the EPA receives such comments, this action will be withdrawn before the effective date by publishing a subsequent document that will withdraw the final action. All public comments received will then be addressed in a subsequent final rule based on this action serving as a proposed rule. The EPA will not institute a second comment period on this action. Any parties interested in commenting on this action should do so at this time. If no such comments are received, the public is advised that this action will be effective April 15, 1996.

Regulatory Process

Under the Regulatory Flexibility Act, 5 U.S.C. 600 et seq., EPA must prepare a regulatory flexibility analysis assessing the impact of any proposed or final rule on small entities. 5 U.S.C. 603 and 604. Alternatively, EPA may certify that the rule will not have a significant impact on a substantial number of small entities. Small entities include small businesses, small not-for-profit enterprises and government entities with jurisdiction over population of less than 50,000.

Limited approvals under sections 110 and 301(a) and subchapter I, Part D of the CAA do not create any new requirements, but simply approve requirements that the State is already imposing. Therefore, because the Federal SIP-approval does not impose any new requirements, I certify that it does not have a significant impact on any small entities affected. Moreover, due to the nature of the Federal-state relationship under the CAA, preparation of a regulatory flexibility analysis would constitute Federal inquiry into the economic reasonableness of state action. Under the CAA, EPA may not base its actions concerning SIPs on such grounds. *Union Electric Co.* v. *U.S. E.P.A.*, 427 U.S. 246, 256–66 (1976); 42 U.S.C. 7410(a)(2).

EPA's limited disapproval of the State request under sections 110 and 301 and subchapter I, Part D of the CAA does not affect any existing requirements applicable to small entities. Federal disapproval of the state submittal does not affect its state enforceability. Moreover, EPA's limited disapproval of the submittal does not impose any new Federal requirements. Therefore, EPA certifies that this limited disapproval action does not have a significant impact on a substantial number of small entities because it does not remove

existing requirements nor does it impose any new Federal requirements.

Under section 307(b)(1) of the Act, petitions for judicial review of this action must be filed in the United States Court of Appeals for the appropriate circuit by April 15, 1996. Filing a petition for reconsideration by the Administrator of this final rule does not affect the finality of this rule for the purposes of judicial review nor does it extend the time within which a petition for judicial review may be filed and shall not postpone the effectiveness of such rule or action. This action may not be challenged later in proceedings to enforce its requirements (see section 307(b)(2)).

Unfunded Mandates

Under Sections 202, 203, and 205 of the Unfunded Mandates Reform Act of 1995 (''Unfunded Mandates Act''), signed into law on March 22, 1995, EPA must undertake various actions in association with proposed or final rules that include a Federal mandate that may result in estimated costs of $100 million or more to the private sector or to State, local, or tribal governments in the aggregate.

Through submission of this state implementation plan or plan revision, the State and any affected local or tribal governments have elected to adopt the program provided for under Part D of the Clean Air Act. This rule may bind State, local, and tribal governments to perform certain actions and also require the private sector to perform certain duties. The rule being incorporated into the SIP by this action will impose no new requirements because affected sources are already subject to these regulations under State law. Therefore, no additional costs to State, local, or tribal governments or to the private sector result from this action. EPA has also determined that this final action does not include a mandate that may result in estimated costs of $100 million or more to State, local, or tribal governments in the aggregate or to the private sector.

This action has been classified as a Table 3 action for signature by the Regional Administrator under the procedures published in the Federal Register on January 19, 1989 (54 FR 2214–2225), as revised by a July 10, 1995 memorandum from Mary Nichols, Assistant Administrator for Air and Radiation. The Office of Management and Budget (OMB) has exempted this regulatory action from Executive Order 12866 review.

List of Subjects in 40 CFR Part 52

Environmental protection, Air pollution control, Hydrocarbons, Incorporation by reference, Intergovernmental relations, Ozone, Reporting and recordkeeping requirements, Volatile organic compounds.

Note: Incorporation by reference of the State Implementation Plan for the State of California was approved by the Director of the Federal Register on July 1, 1982.

Dated: January 16, 1996.

Felicia Marcus,

Regional Administrator.

Subpart F of part 52, chapter I, title 40 of the Code of Federal Regulations is amended as follows:

PART 52—[AMENDED]

1. The authority citation for part 52 continues to read as follows:

Subpart F—California

Authority: 42 U.S.C. 7401–7671q.

2. Section 52.220 is amended by adding paragraph (c)(198)(i)(I) to read as follows:

§ 52.220 Identification of plan.

* * * * *

(c) * * *

(198) * * *

(i) * * *

(I) San Diego County Air Pollution Control District.

(*1*) Rule 67.10, adopted on June 15, 1994.

* * * * *

[FR Doc. 96–3231 Filed 2–13–96; 8:45 am]

BILLING CODE 6560–50–W

---

40 CFR Part 52

[WA40–1–7099; WA42–1–7115; AK11–1–6944; FRL–5337–8]

Approval and Promulgation of Implementation Plans: Washington and Alaska

AGENCY: Environmental Protection Agency.

ACTION: Final rule.

SUMMARY: Pursuant to procedures described at 54 FR 2214 (January 19, 1989), EPA has recently approved a number of minor State implementation plan (SIP) revisions submitted by the Washington Department of Ecology (WDOE) and the Alaska Department of Environmental Conservation (ADEC). These revisions included local air pollution control regulations submitted by WDOE from the Puget Sound Air Pollution Control Agency (PSAPCA) which are at least as stringent as the WDOE statewide rules. The revisions also included the carbon monoxide (CO) contingency measure for Fairbanks, AK., submitted by ADEC. ADEC's SIP revision, identified as the repair technician training and certification program, was previously approved by EPA on April 5, 1995 (60 FR 17232) as part of the State's inspection and maintenance program in the Fairbanks North Star Borough, but no credit had been taken by the State for the program at that time. Therefore, the CO contingency measure in Fairbanks was submitted as a separate element to meet the requirements of the Clean Air Act, as amended in 1990 (the ''Act''). This document lists the revisions EPA has approved and incorporates the relevant material into the Code of Federal Regulations.

EFFECTIVE DATE: February 14, 1996.

ADDRESSES: Copies of Washington's and Alaska's State SIP revision requests and EPA's letter notices of approval are available for public inspection during normal business hours at the following locations: EPA, Region 10, Office of Air, Docket # WA–40–1–7099, WA–42–1–7115, AK–11–1–6944, 1200 Sixth Avenue, Seattle, WA. 98101; WDOE, Mail Stop PV–11, Olympia, WA. 98504–8711; and ADEC, 410 Willoughby Ave., Suite 105, Juneau, AK. 99801–1795.

FOR FURTHER INFORMATION CONTACT: Montel Livingston, Office of Air (AT–082), EPA, Seattle, WA. 98101, (206) 553–0180.

SUPPLEMENTARY INFORMATION: EPA Region 10 has approved the following minor SIP revision requests under section 110(a) of the Act:

State	Subject matter	Date of submission	Date of approval
WA ...	Amendment to SIP affecting PSAPCA's regulation I. Clarifies intent of requirement, repeals redundancies.	5–17–95	6–19–95

State	Subject matter	Date of submission	Date of approval
WA ...	Amendment to SIP incorporating guidelines for evaluating toxic air contaminant emissions into the regulations.	9–7–95	10–23–95
AK	Amendment to SIP adding a carbon monoxide contingency measure for Fairbanks.	7–12–95	9–7–95

EPA has determined that each of these SIP revisions complies with all applicable requirements of the Act and EPA policy and regulations concerning such revisions. Due to the minor nature of these revisions, EPA concluded that conducting notice-and-comment rulemaking prior to approving the revisions would have been ''unnecessary and contrary to the public interest,'' and hence, was not required by the Administrative Procedure Act, 5 U.S.C. 553(b). Each of these SIP approvals became final and effective on the date of EPA approval as listed in the chart above.

The Office of Management and Budget has exempted all SIP approvals from the requirements of section 3 of Executive Order 12866.

Under 5 U.S.C. 605(b), I certify that these SIP revisions will not have a significant impact on a substantial number of small entities. See 46 FR 8709.

Under section 307(b)(1) of the Act, as amended, judicial review of this action is available only by filing a petition for review in the United States Court of Appeals for the appropriate circuit by April 15, 1996. These actions may not be challenged later in proceedings to enforce their requirements. See section 307(b)(2).

List of Subjects in 40 CFR Part 52

Environmental protection, Air pollution control, Carbon monoxide, Incorporation by reference, Intergovernmental relations, Particulate matter, Reporting and recordkeeping requirements.

Note: Incorporation by reference of the Implementation Plans for the States of Washington and Alaska were approved by the Director of the Office of Federal Register on July 1, 1982.

Dated: November 14, 1995.

Chuck Clarke,

Regional Administrator.

40 CFR part 52 is amended as follows:

PART 52—[AMENDED]

1. The authority citation for part 52 continues to read as follows:

Authority: 42 U.S.C. 7401–7671q.

Subpart C—Alaska

2. Section 52.70 is amended by adding paragraph (c)(26) to read as follows:

§ 52.70 Identification of plan.

* * * * *

(c) * * *

(26) Submittal to EPA from the ADEC of CO contingency measure for Fairbanks, AK.

(i) Incorporation by reference.

(A) Letter dated July 12, 1995 from the Commissioner of the ADEC to the EPA Regional Administrator submitting its repair technician and certification program element found in State regulation 18 AAC 52.400–410, effective June 24, 1994.

Subpart WW—Washington

3. Section 52.2470 is amended by adding paragraph (c)(59) to read as follows:

§ 52.2470 Identification of plan.

* * * * *

(c) * * *

(59) Various minor revisions consisting of amended regulations affecting a local air agency, PSAPCA, were submitted to EPA from the WDOE for inclusion into the Washington SIP.

(i) Incorporation by reference.

(A) Letters dated May 17, and September 7, 1995 from the Director of the WDOE to the EPA Regional Administrator submitting minor revisions to PSAPCA's regulations for inclusion into the SIP: PSAPCA, Regulation I adopted on May 22, 1995; PSAPCA, Regulation III adopted on September 11, 1995.

[FR Doc. 96–3230 Filed 2–13–96; 8:45 am]

BILLING CODE 6560–50–P

40 CFR Part 70

[TN–NASH–96–01; FRL–5422–4]

Clean Air Act Final Full Approval of Operating Permits Program; Metropolitan Health Department, Metropolitan Government of Nashville and Davidson County, TN

AGENCY: Environmental Protection Agency (EPA).

ACTION: Final full approval.

SUMMARY: The EPA is promulgating full approval of the Operating Permits Program submitted by the State of Tennessee on behalf of the Metropolitan Health Department (''Nashville-Davidson County'' or ''the County''), located in the geographic area of Nashville-Davidson County. The County's program was submitted for the purpose of complying with Federal requirements which mandate that states or local authorities develop, and submit to EPA, programs for issuing operating permits to all major stationary sources, and to certain other sources.

EFFECTIVE DATE: March 15, 1996.

ADDRESSES: Copies of the Nashville-Davidson County submittal and other supporting information used in developing the final full approval are available for inspection during normal business hours at the following location: U.S. Environmental Protection Agency, Region 4, 345 Courtland Street NE, Atlanta, Georgia 30365, on the 3rd floor of the Tower Building. Interested persons wanting to examine these documents, contained in EPA docket number TN–NASH–96–01, should make an appointment at least 24 hours before the visiting day.

FOR FURTHER INFORMATION CONTACT: Gracy R. Danois, Title V Program Development Team, Air Programs Branch, Air, Pesticides & Toxics Management Division, U.S. Environmental Protection Agency, Region 4, 345 Courtland Street, NE., Atlanta, Georgia 30365, (404) 347–3555, Ext. 4150.

SUPPLEMENTARY INFORMATION:

I. Background and Purpose

A. Introduction

Title V of the 1990 Clean Air Act Amendments (sections 501–507 of the Clean Air Act (''the Act'')), and implementing regulations at 40 Code of Federal Regulations (CFR) part 70 require that states or authorized local agencies develop and submit operating permits programs to EPA by November 15, 1993, and that EPA act to approve or disapprove each program within one

year after receiving the submittal. EPA's program review occurs pursuant to section 502 of the Act and the part 70 regulations, which together outline criteria for approval or disapproval. Where a program substantially, but not fully, meets the requirements of part 70, EPA may grant the program interim approval for a period of up to two years. If EPA has not fully approved a program by November 15, 1995, or by the end of an interim program, it must establish and implement a Federal program.

On October 11, 1995, EPA proposed full approval, or in the alternative, interim approval of the operating permits program for Nashville-Davidson County. *See* 60 FR 52890. The October 11, 1995, notice also proposed approval of the County's interim mechanism for implementing section 112(g) and for delegation of section 112 standards as promulgated. EPA did not receive any comments on the proposal. On December 28, 1995, the State of Tennessee submitted on behalf of Nashville-Davidson County a package containing revisions to the operating permits program, which addressed the deficiency discussed in the full/interim approval notice. As required by 40 CFR 70.5(c), the County adopted revisions to M.C.L. section 10.56.050 to ensure that information needed to determine the applicability of, or to impose, any applicable requirement, or to collect any permit fees is not excluded from the application. Specifically the new provision, M.C.L. section 10.56.050(F), reads as follows: ''Notwithstanding any exemptions in this Section, any application submitted in accordance with Section 10.56.020 and Section 10.50.040 of this Chapter shall include all emission sources and quantify emissions if needed to determine major source status, to determine compliance with an applicable requirement and/or the applicability of any applicable requirement such as a NSPS, NESHAPS, or MACT standard, etc., or in [the] calculation [of] permit fees in accordance with Section 10.56.080.'' This change became locally effective on December 14, 1995.

In this action, EPA is promulgating full approval of the Nashville-Davidson County operating permits program, and approving the section 112(g) and section 112(l) mechanisms noted above.

II. Final Action and Implications

A. Title V Operating Permits Program

The EPA is promulgating full approval of the operating permits program submitted by the State of Tennessee, on behalf of Nashville-Davidson County, on November 13, 1993, and supplemented on April 19, 1994; September 27, 1994; December 28, 1994; and December 28, 1995. The October 11, 1995, notice established that the County would receive full approval of its program if changes to M.C.L. section 10.56.050 were adopted prior to final promulgation. Such changes became locally effective on December 14, 1995. Nashville-Davidson County has demonstrated that the program will be adequate to meet the minimum elements of a state or local operating permits program as specified in 40 CFR part 70.

The scope of the County's part 70 program approved in this notice applies to all part 70 sources (as defined in the approved program) within Nashville-Davidson County, except any sources of air pollution over which an Indian Tribe has jurisdiction. *See, e.g.*, 59 FR 55813, 55815–18 (Nov. 9, 1994). The term ''Indian Tribe'' is defined under the Act as ''any Indian tribe, band, nation, or other organized group or community, including any Alaska Native village, which is Federally recognized as eligible for the special programs and services provided by the United States to Indians because of their status as Indians.'' *See* section 302(r) of the CAA; *see also* 59 FR 43956, 43962 (Aug. 25, 1994); 58 FR 54364 (Oct. 21, 1993).

B. Preconstruction Permit Program Implementing Section 112(g)

EPA is approving the use of Nashville-Davidson County's preconstruction review program found in M.C.L. section 10.56.020 as a mechanism to implement section 112(g) during the transition period between promulgation of EPA's section 112(g) rule and the County's adoption of rules specifically designed to implement section 112(g). This approval is limited to the implementation of the 112(g) rule and is effective only during any transition time between the effective date of the 112(g) rule and the adoption of specific rules by Nashville-Davidson County to implement section 112(g). The duration of this approval is limited to 18 months following promulgation by EPA of section 112(g) regulations, to provide the County with adequate time to adopt regulations consistent with Federal requirements.

C. Program for Delegation of Section 112 Standards as Promulgated

Requirements for approval, specified in 40 CFR 70.4(b), encompass section 112(l)(5) requirements for approval of a program for delegation of section 112 standards as promulgated by EPA as they apply to part 70 sources. Section 112(l)(5) requires that the County's program contain adequate authorities, adequate resources for implementation, and an expeditious compliance schedule, which are also requirements under part 70. Therefore, the EPA is also promulgating approval under section 112(l)(5) and 40 CFR 63.91 of Nashville-Davidson County's program for receiving delegation of section 112 standards and programs that are unchanged from Federal rules as promulgated. In addition, EPA is approving the delegation of all existing standards and programs under 40 CFR parts 61 and 63. This program for delegation applies to both part 70 sources and non-part 70 sources.

III. Administrative Requirements

A. Docket

Copies of the Nashville-Davidson County submittal and other information relied upon for the final full approval are contained in docket number TN–NASH–96–01 maintained at the EPA Regional Office. The docket is an organized and complete file of all the information submitted to, or otherwise considered by, EPA in the development of this final full approval. The docket is available for public inspection at the location listed under the **ADDRESSES** section of this document.

B. Executive Order 12866

The Office of Management and Budget has exempted this action from Executive Order 12866 review.

C. Regulatory Flexibility Act

The EPA's actions under section 502 of the Act do not create any new requirements, but simply address operating permits programs submitted to satisfy the requirements of 40 CFR part 70. Because this action does not impose any new requirements, it does not have a significant impact on a substantial number of small entities.

List of Subjects in 40 CFR Part 70

Environmental protection, Administrative practice and procedure, Air pollution control, Intergovernmental relations, Operating permits, Reporting and recordkeeping requirements.

Dated: February 1, 1996.

Phyllis P. Harris,

Acting Regional Administrator.

Part 70, title 40 of the Code of Federal Regulations is amended as follows:

PART 70—[AMENDED]

1. The authority citation for part 70 continues to read as follows:

Authority: 42 U.S.C. 7401, *et seq.*

2. Appendix A to part 70 is amended by adding the entry for Tennessee in alphabetical order to read as follows:

Appendix A to Part 70—Approval Status of State and Local Operating Permits Programs

* * * * *

Tennessee

(a) (Reserved)

(b) The Metropolitan Health Department, Metropolitan Govenment of Nashville-Davidson County; submitted on November 13, 1993, and supplemented on April 19, 1994; September 27, 1994; December 28, 1994; and December 28, 1995; full approval effective on March 15, 1996.

* * * * *

[FR Doc. 96–3283 Filed 2–13–96; 8:45 am]

BILLING CODE 6560–50–P

---

40 CFR Part 81

[MI39–03–7248; FRL–5421–9]

Designation of Areas for Air Quality Planning Purposes; Correction of Designation of Nonclassified Ozone Nonattainment Areas; State of Michigan

AGENCY: United States Environmental Protection Agency (USEPA).

ACTION: Final rule.

SUMMARY: On August 8, 1995 the USEPA simultaneously published a direct final notice of rulemaking and notice of proposed rulemaking in which USEPA published its decision to correct erroneous ozone designations made in 1980 for the Allegan County, Barry County, Battle Creek (Calhoun County), Benton Harbor (Berrien County), Branch County, Cass County, Gratiot County, Hillsdale County, Huron County, Ionia County, Jackson (Jackson County), Kalamazoo (Kalamazoo County), Lapeer County, Lenawee County, Montcalm (Montcalm County), Sanilac County, Shiawassee County, St. Joseph County, Tuscola County, and Van Buren County nonattainment nonclassified/incomplete data areas and the Lansing-East Lansing (Clinton County, Eaton County, and Ingham County) nonattainment nonclassified/transitional area. Pursuant to section 110(k)(6) of the Act, the USEPA published the designation correction of these areas to attainment/unclassifiable for ozone. The 30-day comment period concluded on September 7, 1995. During this comment period, the USEPA received two comment letters in response to the August 8, 1995, rulemaking. This final rule summarizes comments and USEPA's responses, and finalizes the USEPA's decision to correct the designations of 20 of these areas to attainment/unclassifiable for ozone. The USEPA will respond to comments relevant to Allegan County, Michigan and publish a final rulemaking on this area in a separate rulemaking action in a future Federal Register.

EFFECTIVE DATE: This action will be effective March 15, 1996.

ADDRESSES: Copies of the documents relevant to this action are available for inspection at the following address: (It is recommended that you telephone Jacqueline Nwia at (312) 886–6081 before visiting the Region 5 Office.) United States Environmental Protection Agency, Region 5, Air and Radiation Division, 77 West Jackson Boulevard, Chicago, Illinois 60604.

FOR FURTHER INFORMATION CONTACT: Jacqueline Nwia, Regulation Development Section (AR–18J), Air Programs Branch, Air and Radiation Division, United States Environmental Protection Agency, Region 5, 77 West Jackson Boulevard, Chicago, Illinois 60604, Telephone Number (312) 886–6081.

SUPPLEMENTARY INFORMATION:

I. Background Information

On August 8, 1995, the USEPA published a direct final rulemaking (60 FR 40297) correcting the designation for 21 of 23 ozone nonattainment nonclassified incomplete/no data and transitional areas in Michigan to attainment/unclassifiable due to the lack of in-county ozone monitoring data showing violations of the 0.12 parts per million (ppm) National Ambient Air Quality Standard (NAAQS).

At the same time that the USEPA published the direct final rule, a separate notice of proposed rulemaking was published in the Federal Register (60 FR 40338). This proposed rulemaking specified that USEPA would withdraw the direct final rule if adverse or critical comments were filed on the rulemaking. The USEPA received two letters containing adverse comments regarding the direct final rule within 30 days of publication of the proposed rule and withdrew the direct final rule on October 2, 1995 (60 FR 51360).

The specific rationale the USEPA used to correct certain ozone nonattainment nonclassified areas to attainment is explained in the direct final rule and will not be restated here.

This final rule contained in this Federal Register addresses the comments which were received during the public comment period and announces USEPA's final action regarding these determinations, with the exception of comments relevant to and a final determination regarding Allegan County.

II. Public Comments and USEPA Responses

Two letters were received in response to the August 8, 1995, direct final rulemaking. One was a letter from the Citizens Commission for Clean Air in the Lake Michigan Basin (Citizens Commission) and the other from the New York State Department of Environmental Conservation (NYSDEC). The following discussion summarizes and responds to the comments received, with the exception of those relevant to Allegan County. Comments received relevant to and a final action on Allegan County will be published in a future rulemaking action.

Citizens Commission Comment

The commenter states that the rulemaking is improper and an abuse of the Administrator's authority to correct errors in designation of areas pursuant to Clean Air Act (Act) section 110(k)(6). The commenter restates section 110(k)(6) emphasizing the provision that determinations pursuant to 110(k)(6) and their basis must be provided to the State and public. The commenter further states that the basis of the direct final rule, the lack of air quality data in the affected areas during the 1970s and 1980s, is insufficient grounds for changing the designation of the affected areas under the Act.

USEPA Response

The USEPA disagrees with the commentor's contention that the rulemaking is an improper use and/or abuse of section 110(k)(6). The commenter doesn't provide information or a rationale for this comment. Consistent with section 110(k)(6), the USEPA determined that the designations of these 21 nonattainment nonclassified areas were in error based on the lack of in county monitoring data and, consequently, acted to correct the designation in the same manner as the original designation [1] without requiring any further submission from the State. The determination and its basis were provided to the State and the public through the publication of the direct final and proposed rulemaking actions in the Federal Register.

The commenter does not explain why they believe that the basis of the correction is insufficient grounds for changing the designation of the affected

[1] The original designations were processed in a proposal and subsequent final Federal Register document. The direct final process used in this instance requires a simultaneous proposal and thus, affords the public the opportunity to comment.

areas under the Act. These areas were designated nonattainment based on their proximity to nonattainment areas and the regional nature of the ozone problem (45 FR 25092, April 14, 1980). This could imply that, if the areas had monitored elevated ozone levels, the elevated levels likely could have been a result of ozone and precursors transported from adjacent nonattainment areas. It would be unreasonable to impose the rigorous redesignation requirements of the Act amendments to these areas where an ozone problem, which could be due to transport from other areas, was not monitored but assumed.

Furthermore, the USEPA believes that this basis is appropriate particularly in light of the 1990 Act which significantly relies on ambient monitoring data to classify areas and establish control requirements.

Citizens Commission Comment

The commenter states that the direct final rule is inconsistent with prior agency policy established in the General Preamble (General Preamble for the Implementation of Title 1, 57 FR 13501, April 16, 1992) regarding transitional and incomplete data areas. The General Preamble establishes that incomplete data or no data areas are subject to section 172(b) requirements and requires States to submit a redesignation request and maintenance plan as defined in section 107(d)(3)(E) for such areas. (The commenter cited section 107(d)(1)(E). USEPA believes that this was a typographical error since this section of the Act does not address redesignation requirements.) According to the General Preamble designation of such areas may be changed by individual redesignation requests and not by a correction.

USEPA Response

Since this rulemaking is not based on the redesignation criteria of section 107(d)(3)(E), USEPA redesignation policy or the general preamble redesignation criteria and requirements are irrelevant to this rulemaking. The rulemaking is consistent with section 110(k)(6) of the Act.

Citizens Commission Comment

The commenter states the USEPA is deliberately ignoring the Lake Michigan Ozone Study (LMOS) modeling results, which indicate that many of these areas are not in attainment of the standard, and is, therefore, countering efforts of neighboring nonattainment areas struggling to satisfy the Title I requirements. The commenter states that the current LMOS modeling, which USEPA has accepted and approved for purposes of demonstrating attainment, predicts continued exceedances for many of these Michigan counties in the future. The commenter refers to Episode 4 which shows that exceedances of the NAAQS observed in northwest Indiana can be attributed to emissions originating from many of the Michigan counties proposed for redesignation. The commenter maintains that this finding is verified by recently completed back trajectories for Episode 4. (Trajectories provided by the commenter). The commenter believes that this redesignation is particularly outrageous, given the 6 exceedances recorded in Michigan City, Indiana in the summer of 1995. The commenter further suggests that USEPA use the ambient monitoring data collected during the 1991 LMOS field study to designate Delta, Benzie, and Mason Counties to nonattainment.

USEPA Response

The USEPA is not ignoring the LMOS. The USEPA recognizes that the Lake Michigan States of Michigan, Wisconsin, Illinois and Indiana are conducting urban airshed modeling (UAM) which is being coordinated by LADCO that will be used for purposes of demonstrating attainment throughout the Lake Michigan region. The modeling is currently being refined. The USEPA also recognizes the importance of the modeling effort and subsequent results. The USEPA has determined that the model performance evaluation for UAM, Version V, submitted by LADCO on behalf of the Lake Michigan States on October 1, 1994, could be used for regulatory purposes. This means, however, that the method of showing attainment has been approved, rather than that actual attainment demonstrations have been approved.

UAM has been submitted to the USEPA on three occasions; November 14, 1994, with an attainment date extension request for the Western Michigan moderate ozone nonattainment areas, on November 15, 1994, with an attainment date extension request for Sheboygan, Manitowoc, and Kewaunee Counties in Wisconsin, and on July 13, 1994, with a section 182(f) NO_x exemption request for areas in Michigan, Wisconsin, Illinois and Indiana. The UAM submitted to the USEPA to date does not and was not intended to demonstrate attainment. The USEPA has reviewed this modeling and cannot conclusively determine that the 20 nonclassified areas in Michigan subject to this correction are not attaining the standard, will not be attaining the standard in the future, or may contribute to ozone concentrations in downwind areas. Although, a few Episode 2 modeling runs indicate that portions of Berrien and Van Buren Counties fall between 120 ppb and 130 ppb isopleths[2] and, in two modeling runs, possibly between the 120 ppb and 140 ppb isopleths, the actual predicted ozone concentrations in these areas cannot be determined.

The USEPA does not agree that Episode 4 (June 21–21, 1991) shows that exceedances of the NAAQS observed in northwest Indiana can be attributed to emissions originating from these areas and it is unclear how the trajectories provided by the commenter support this conclusion. Episode 4 illustrates the scenario of north-northeasterly winds. Although, Episode 4 modeling runs show that Michigan emissions may impact downwind areas, the modeling does not clearly demonstrate that the ozone precursor emissions from these counties are the cause of exceedances in the downwind areas. Similarly, although the trajectories may indicate north-northeasterly wind patterns and therefore, airflow from Michigan to Indiana, the extent to which the ozone precursor emissions from these counties contribute to ozone concentrations cannot be determined conclusively.

The USEPA is aware of monitored ozone exceedances in Michigan City, Indiana, during the 1995 ozone season. The USEPA does not expect this rulemaking to have an impact on the likelihood of Michigan City being designated to nonattainment.

Ozone monitoring data collected during the 1990 and 1991 field studies in Delta, Benzie and Mason counties are not relevant to this rulemaking action.

Finally, the USEPA would also note that the Lake Michigan States are participating in the Phase I/Phase II process as provided for within the March 2, 1995, memorandum from Mary Nichols, Assistant Administrator for Air and Radiation, entitled *Ozone Attainment Demonstrations*. Phase II of the analysis would assess the need for regional control strategies and refine the local control strategies. Phase II would also provide the States and USEPA the opportunity to determine appropriate regional strategies to resolve transport issues including any impacts these areas may have on ozone concentrations in their downwind areas. The USEPA has the authority under sections 110(a)(2)(A) and 110(a)(2)(D) of the Act to ensure that the required and necessary reductions are achieved in

[2] Isopleths are the lines generated by the results of the urban airshed model indicating ozone concentrations.

these areas should subsequent modeling become available, such as the modeling that will be available through completion of the Phase II analysis, or any other subsequent modeling data. USEPA has authority, and the state has an obligation, under section 110(a)(2)(A) (in the case of intrastate areas) and section 110(a)(2)(D) (in the case of interstate areas), to address transported emissions from upwind areas that significantly contribute to air quality problems in downwind areas. This action, therefore, does not preclude the USEPA from requiring control measures in these areas in the future.

Citizens Commission Comment

The commenter believes that the State and USEPA were correct when they concluded in 1980 (the commenter cites 1989. However, USEPA believes this was a typographical error and that the commenter intended to cite 1980) that these Michigan counties should be designated as nonattainment and reevaluated once appropriate monitoring data become available. Appropriate monitoring data can only be obtained if the State establishes a comprehensive monitoring network and contributes to a comprehensive, regional attainment strategy.

USEPA Response

Michigan's November 8, 1979 analysis concluded that in light of the new 0.12 ppm standard, changes to the March 3, 1978 designations were not warranted and that the designations would be reevaluated as more data on rural ozone levels became available. The USEPA approved this submittal on June 2, 1980. Since 1979, the State of Michigan expanded the ozone monitoring network to Branch, Cass, Clinton, Eaton, Ingham (relocated), and Tuscola Counties and later to Benzie, Berrien, Huron, Kalamazoo, Lenawee, Montcalm, and Van Buren Counties. Exceedances of the 0.12 ppm NAAQS were recorded in a number of counties and violations were recorded in Huron County in 1980 (2 exceedances in 1980 at two separate monitors),[3] and Cass County in 1980 (3 exceedances in 2 years, 1979–1980)[4] and Tuscola County in 1988 (1 exceedances in 1988).[5] Subsequently, Cass, Huron and Tuscola Counties have monitored attainment.

Regarding the State's contribution to a comprehensive, regional attainment strategy, as noted previously, the Lake Michigan States are participating in the Phase I/Phase II process. This process will provide the States and USEPA with information to determine appropriate regional strategies to resolve transport issues including any impacts these Michigan areas may have on ozone concentrations in their downwind areas. The USEPA has the authority to ensure that the required and necessary reductions are achieved in these areas should subsequent modeling become available.

Citizens Commission Comment

The commenter states that the direct final rule does not explain why the June 2, 1980 designation does not remain in effect pursuant to the general savings clause, section 193 of the Act. The general savings clause requires that ''no control requirement in effect * * * may be modified after such enactment in any manner unless the modification insures equivalent or greater emission reductions of such air pollutant.'' The commenter states that if these areas are designated to attainment/unclassifiable, they would not achieve equivalent or greater emission reductions in ozone precursor emissions.

USEPA Response

Section 193 of the Act states that each rule promulgated by the Administrator, in effect before November 15, 1990, must remain in effect, unless revised by the Administrator. This action is a correction to a designation, it is not a revision to any control requirement, so that section 193 is not applicable. In any event, section 193 also stipulates that no control requirement may be modified in any manner unless the modification insures equivalent or greater emission reductions. This component of section 193 was intended to preserve the control programs and measures already implemented in the area. Since programs and measures already implemented in the area that achieved emission reductions are not being removed, replacement reductions are not necessary.

NYSDEC Comment

The NYSDEC disagrees that an error was made in determining the ozone designations for the nonclassified areas in southern Michigan. The air monitoring network used by Michigan to designate these areas nonattainment in 1978 and uphold them in 1980, complied with the federal Act citing criteria and provisions for establishing air quality control regions. The NYSDEC also questions the rationale for correcting the ozone designation fifteen years later and believes that even if an error was made that it does not warrant a direct final rulemaking.

USEPA Response

The USEPA is not implying that the ambient monitoring network established by the Michigan Department of Natural Resources (MDNR) at that time was inadequate. The USEPA believes, however, that the monitoring network that operated during the mid-1970s was not appropriate for purposes of designating all of these areas to nonattainment. There was no data available demonstrating that these areas were in violation of the ozone NAAQS to warrant a nonattainment designation. However, the State of Michigan chose this designation for these areas based on their proximity to nonattainment areas and the regional nature of the ozone problem (45 FR 25092, April 14, 1980). The basis of the original designations and rationale implies that if the areas had monitored elevated ozone levels, the elevated levels likely would have been a result of ozone and precursors transported from adjacent nonattainment areas. It would be unreasonable to impose the rigorous redesignation requirements of the Act amendments to these areas if an ozone problem, likely due to transport from other areas, was not monitored but assumed. Furthermore, as previously noted, the USEPA believes that this basis is appropriate, particularly in light of the 1990 Act, which significantly relies on ambient monitoring data to classify areas and establish control requirements.

NYSDEC Comment

The commenter cites elevated ozone levels observed in southern Michigan and notes that the August 8, 1995, direct final rule states a violation in Lenawee County has probably occurred in the period 1993–1995.

USEPA Response

The correction is based on the ambient monitoring data available at the time the original designations were promulgated. The preliminary data which indicated that a violation may have occurred in Lenawee County were subsequently invalidated due to a malfunctioning ambient monitor which was replaced by the MDNR.

NYSDEC Comment

NYSDEC also requested additional time to review the AIRS data and documentation used in the USEPA's analysis of which they recently obtained copies.

USEPA Response

The public was afforded 30 days to comment on this rulemaking action. The USEPA does not believe that any

[3] The monitor was established in 1980.

[4] This monitor was established in 1979.

[5] Poor data capture in 1980.

extension of time is necessary as an adequate comment period has already been provided.

III. Final Rulemaking Action

In this action the USEPA is promulgating a correction to correct the ozone designation status of the Barry County, Battle Creek (Calhoun County), Benton Harbor (Berrien County), Branch County, Cass County, Gratiot County, Hillsdale County, Huron County, Ionia County, Jackson (Jackson County), Kalamazoo (Kalamazoo County), Lapeer County, Lenawee County, Montcalm (Montcalm County), Sanilac County, Shiawassee County, St. Joseph County, Tuscola County, and Van Buren County nonattainment nonclassified/incomplete data and the Lansing-East Lansing (Clinton County, Eaton County, Ingham County) nonattainment nonclassified/transitional area to attainment/unclassifiable for ozone pursuant to section 110(k)(6).

Under the Regulatory Flexibility Act, 5 U.S.C. 600 et seq., USEPA must prepare a regulatory flexibility analysis assessing the impact of any proposed or final rule on small entities. 5 U.S.C. 603 and 604. Alternatively, USEPA may certify that the rule will not have a significant economic impact on a substantial number of small entities. Small entities include small businesses, small not-for-profit enterprises, and government entities with jurisdiction over populations of less than 50,000. Today's determination does not create any new requirements, but suspends the indicated requirements. Therefore, because this notice does not impose any new requirements, I certify that it does not have a significant impact on small entities affected. Under section 202 of the Unfunded Mandates Reform Act of 1995 (''Unfunded Mandates Act''), signed into law on March 22, 1995, the USEPA must prepare a budgetary impact statement to accompany any proposed or final rulemaking that includes a Federal mandate that may result in estimated costs to State, local, or tribal governments in the aggregate; or to the private sector, of $100 million or more. Section 203 requires the USEPA to establish a plan for informing and advising any small governments that may be significantly or uniquely impacted by the rule. Under section 205, the USEPA must select the most cost-effective and least burdensome alternative that achieves the objectives of the rule and is consistent with statutory requirements.

The USEPA has determined that today's final action does not include a Federal mandate that may result in estimated costs of $100 million or more to either State, local or tribal governments in the aggregate, or to the private sector. This Federal action imposes no new Federal requirements. Accordingly, no additional costs to State, local, or tribal governments, or to the private sector, result from this action.

Under section 307(b)(1) of the Act, petitions for judicial review of this final action must be filed in the United States Court of Appeals for the appropriate circuit by April 15, 1996. Filing a petition for reconsideration by the Administrator of this final rule does not affect the finality of this rule for the purposes of judicial review nor does it extend the time within which a petition for judicial review may be filed, and shall not postpone the effectiveness of such rule or action. This action may not be challenged later in proceedings to enforce its requirements. (See Section 307(b)(2)).

List of Subjects in 40 CFR Part 81

Environmental protection, Air pollution control.

Dated: February 7, 1996.

Carol M. Browner,

Administrator.

40 CFR Part 81 is amended as follows:

PART 81—DESIGNATION OF AREAS FOR AIR QUALITY PURPOSES

1. The authority citation of part 81 continues to read as follows:

Authority: 42 U.S.C. 7401 - 7671q.

2. In § 81.323 the ozone table is amended by revising the entries for Barry County Area, Battle Creek Area, Benton Harbor Area, Branch County Area, Cass County Area, Gratiot County Area, Hillsdale County Area, Huron County Area, Ionia County Area, Jackson Area, Kalamazoo Area, Lapeer County Area, Lenawee County Area, Montcalm Area, Sanilac County Area, Shiawassee County Area, St. Joseph County Area, Tuscola County Area, Van Buren County Area and Lansing-East Lansing Area to read as follows:

§ 81.323 Michigan.

* * * * *

MICHIGAN—OZONE

Designated areas	Designation		Classification	
	Date [1]	Type	Date	Type
* * *	*	*	*	*
Barry County Area, Barry County	Mar. 15, 1996	Unclassifiable/Attainment.		
Battle Creek Area, Calhoun County	Mar. 15, 1996	Unclassifiable/Attainment.		
Benton Harbor Area, Berrien County	Mar. 15, 1996	Unclassifiable/Attainment.		
Branch County Area, Branch County	Mar. 15, 1996	Unclassifiable/Attainment.		
Cass County Area, Cass County	Mar. 15, 1996	Unclassifiable/Attainment.		
* * *	*	*	*	*
Gratiot County Area, Gratiot County	Mar. 15, 1996	Unclassifiable/Attainment.		
Hillsdale County Area, Hillsdale County	Mar. 15, 1996	Unclassifiable/Attainment.		
Huron County Area, Huron County	Mar. 15, 1996	Unclassifiable/Attainment.		
Ionia County Area, Ionia County	Mar. 15, 1996	Unclassifiable/Attainment.		
Jackson Area, Jackson County	Mar. 15, 1996	Unclassifiable/Attainment.		
Kalamazoo Area, Kalamazoo County	Mar. 15, 1996	Unclassifiable/Attainment.		
Lansing-East Lansing Area:				
Clinton County	Mar. 15, 1996	Unclassifiable/Attainment.		
Eaton County	Mar. 15, 1996	Unclassifiable/Attainment.		
Ingham County	Mar. 15, 1996	Unclassifiable/Attainment.		
Lapeer County Area, Lapeer County	Mar. 15, 1996	Unclassifiable/Attainment.		
Lenawee County Area, Lenawee County	Mar. 15, 1996	Unclassifiable/Attainment.		

MICHIGAN—OZONE—Continued

Designated areas	Designation		Classification	
	Date [1]	Type	Date	Type
Montcalm Area, Montcalm County	Mar. 15, 1996	Unclassifiable/Attainment.		
* * *	*	*	*	*
Sanilac County Area, Sanilac County	Mar. 15, 1996	Unclassifiable/Attainment.		
Shiwassee County Area, Shiwassee County	Mar. 15, 1996	Unclassifiable/Attainment.		
St. Joseph County Area, St. Joseph County	Mar. 15, 1996	Unclassifiable/Attainment.		
Tuscola County Area, Tuscola County	Mar. 15, 1996	Unclassifiable/Attainment.		
Van Buren County Area, Van Buren County	Mar. 15, 1996	Unclassifiable/Attainment.		
* * *	*	*	*	*

[1] This date is November 15, 1990, unless otherwise noted.

[FR Doc. 96–3330 Filed 2–13–96; 8:45 am]
BILLING CODE 6560–50–P

40 CFR Part 180

[PP 5E4598/R2197; FRL–4994–9]

RIN 2070–AB78

Imidacloprid; Pesticide Tolerance

AGENCY: Environmental Protection Agency (EPA).

ACTION: Final rule.

SUMMARY: This document establishes a time-limited tolerance for indirect or inadvertent combined residues of the insecticide (1-[6-chloro-3-pyridinyl)methyl]-*N*-nitro-2-imidazolidinimine) (referred to in this document as imidacloprid) and its metabolites resulting from crop rotational practices in or on the raw agricultural commodities in the cucurbit vegetables crop group. The Interregional Research Project No. 4 (IR-4) requested the regulation to establish a maximum permissible level for residues of the insecticide pursuant to the Federal Food, Drug, and Cosmetic Act (FFDCA).

EFFECTIVE DATE: This regulation becomes effective February 14, 1996.

ADDRESSES: Written objections and hearing requests, identified by the docket control number, [PP 5E4598/R2197], may be submitted to: Hearing Clerk (1900), Environmental Protection Agency, Rm. M3708, 401 M St., SW., Washington, DC 20460. Fees accompanying objections and hearing requests shall be labeled ''Tolerance Petition Fees'' and forwarded to: EPA Headquarters Accounting Operations Branch, OPP (Tolerance Fees), P.O. Box 360277M, Pittsburgh, PA 15251. A copy of any objections and hearing requests filed with the Hearing Clerk should be identified by the docket control number and submitted to: Public Response and Program Resources Branch, Field Operations Division (7506C), Office of Pesticide Programs, Environmental Protection Agency, 401 M St., SW., Washington, DC 20460. In person, bring copy of objections and hearing requests to Rm. 1132, CM #2, 1921 Jefferson Davis Highway., Arlington, VA.

A copy of objections and hearing requests filed with the Hearing Clerk may also be submitted electronically by sending electronic mail (e-mail) to: opp-docket@epamail.epa.gov. Copies of objections and hearing requests must be submitted as an ASCII file avoiding the use of special characters and any form of encryption. Copies of objections and hearing requests will also be accepted on disks in WordPerfect 5.1 file format or ASCII file format. All copies of objections and hearing requests in electronic form must be identified by the docket number [PP 5E4598/R2197]. No Confidential Business Information (CBI) should be submitted through e-mail. Electronic copies of objections and hearing requests on this rule may be filed online at many Federal Depository Libraries. Additional information on electronic submissions can be found below in this document.

FOR FURTHER INFORMATION CONTACT: By mail: Hoyt L. Jamerson, Registration Division (7505W), Environmental Protection Agency, 401 M St., SW., Washington, DC 20460. Office location, telephone number, and e-mail address: Sixth Floor, Crystal Station #1, 2800 Jefferson Davis Highway, Arlington, VA, (703) 308-8783, e-mail:jamerson.hoyt@epamail.epa.gov.

SUPPLEMENTARY INFORMATION: In the Federal Register of December 13, 1995 (60 FR 64006), EPA issued a proposed rule that gave notice that the Interregional Research Project No. 4 (IR-4), New Jersey Agricultural Experiment Station, P.O. Box 231, New Brunswick, NJ 08903, had submitted pesticide petition 5E4598 to EPA on behalf of the Agricultural Experiment Stations of California, Florida, Georgia, South Carolina, and Texas. This petition requests that the Administrator, pursuant to section 408(e) of the Federal Food, Drug, and Cosmetic Act (FFDCA), 21 U.S.C. 346a(e) amend 40 CFR 180.472 by establishing a time-limited tolerance for indirect or inadvertent, combined residues of the insecticide imidacloprid (1-[(6-chloro-3-pyridinyl)methyl]-*N*-nitro-2-imidazolidinimine) and its metabolites containing the 6-chloropyridinyl moiety, all expressed as 1-[(6-chloro-3-pyridinyl)-methyl]-*N*-nitro-2-imidazolidinimine, resulting from crop rotational practices in or on the raw agricultural commodities in the cucurbit vegetables crop group at 0.2 part per million (ppm). There were no comments or requests for referral to an advisory committee received in response to the proposed rule.

The data submitted with the proposal and other relevant material have been evaluated and discussed in the proposed rule. Based on the data and information considered, the Agency concludes that the tolerance will protect the public health. Therefore, the tolerance is established as set forth below.

Any person adversely affected by this regulation may, within 30 days after publication of this document in the Federal Register, file written objections to the regulation and may also request a hearing on those objections. Objections and hearing requests must be filed with the Hearing Clerk, at the address given above (40 CFR 178.20). A

copy of the objections and/or hearing requests filed with the Hearing Clerk should be submitted to the OPP docket for this rulemaking. The objections submitted must specify the provisions of the regulation deemed objectionable and the grounds for the objections (40 CFR 178.25). Each objection must be accompanied by the fee prescribed by 40 CFR 180.33(i). If a hearing is requested, the objections must include a statement of the factual issue(s) on which a hearing is requested, the requestor's contentions on such issues, and a summary of any evidence relied upon by the objector (40 CFR 178.27). A request for a hearing will be granted if the Administrator determines that the material submitted shows the following: There is genuine and substantial issue of fact; there is a reasonable possibility that available evidence identified by the requestor would, if established, resolve one or more of such issues in favor of the requestor, taking into account uncontested claims or facts to the contrary; and resolution of the factual issue(s) in the manner sought by the requestor would be adequate to justify the action requested (40 CFR 178.32).

A record has been established for this rulemaking under docket number [PP 5E4598/R2197] (including any objections and hearing requests submitted electronically as described below). A public version of this record, including printed, paper versions of electronic comments, which does not include any information claimed as CBI, is available for inspection from 8 a.m. to 4:30 p.m., Monday through Friday, excluding legal holidays. The public record is located in Room 1132 of the Public Response and Program Resources Branch, Field Operations Division (7506C), Office of Pesticide Programs, Environmental Protection Agency, Crystal Mall #2, 1921 Jefferson Davis Highway, Arlington, VA.

The official record for this rulemaking, as well as the public version, as described above will be kept in paper form. Accordingly, EPA will transfer any copies of objections and hearing requests received electronically into printed, paper form as they are received and will place the paper copies in the official rulemaking record which will also include all comments submitted directly in writing. The official rulemaking record is the paper record maintained at the address in ''ADDRESSES'' at the beginning of this document.

Under Executive Order 12866 (58 FR 51735, October 4, 1993), the Agency must determine whether the regulatory action is ''significant'' and therefore subject to review by the Office of Management and Budget (OMB) and the requirements of the Executive Order. Under section 3(f), the order defines ''a significant regulatory action'' as an action that is likely to result in a rule: (1) Having an annual effect on the economy of $100 million or more, or adversely and materially affecting a sector of the economy, productivity, competition, jobs, the environment, public health or safety, or State, local or tribal governments or communities (also referred to as ''economically significant''); (2) creating serious inconsistency or otherwise interfering with an action taken or planned by another agency; (3) materially altering the budgetary impacts of entitlement, grants, user fees, or loan programs or the rights and obligations thereof; or (4) raising novel legal or policy issues arising out of legal mandates, the President's priorities, or the principles set forth in this Executive Order.

Pursuant to the terms of this Executive Order, EPA has determined that this rule is not ''significant'' and is therefore not subject to OMB review.

Pursuant to the requirements of the Regulatory Flexibility Act (Pub. L. 96-354, 94 Stat. 1164, 5 U.S.C. 601-612), the Administrator has determined that regulations establishing new tolerances or raising tolerance levels or establishing exemptions from tolerance requirements do not have a significant economic impact on a substantial number of small entities. A certification statement to this effect was published in the Federal Register of May 4, 1981 (46 FR 24950).

List of Subjects in 40 CFR Part 180

Environmental protection, Administrative practice and procedure, Agricultural commodities, Pesticides and pests, Reporting and recordkeeping requirements.

Dated: January 30, 1996.

Stephen L. Johnson,

Director, Registration Division, Office of Pesticide Programs.

Therefore, 40 CFR part 180 is amended as follows:

PART 180—[AMENDED]

1. The authority citation for part 180 continues to read as follows:

Authority: 21 U.S.C. 346a and 371.

2. In §180.472, by adding new paragraph (f), to read as follows:

§ 180.472 1-[(6-Chloro-3-pyridinyl)methyl-N-nitro-2-imidazolidinimine; tolerances for residues.

* * * * *

(f) Time-limited indirect or inadvertent tolerance: A time-limited tolerance, to expire on December 31, 1996, is established for indirect or inadvertent combined residues of the insecticide 1-[(6-chloro-3-pyridinyl)methyl]-*N*-nitro-2-imidazolidinimine and its metabolites containing the 6-chloropyridinyl moiety, all expressed as 1-[(6-chloro-3-pyridinyl)methyl]-*N*-nitro-2-imidazolidinimine, when present therein as a result of the application of the pesticide to growing crops listed in this section and other nonfood crops as follows:

Commodities	Parts per million
Vegetables, cucurbit ..	0.2

[FR Doc. 96–3024 Filed 2–13–96; 8:45 am]

BILLING CODE 6560–50–F

40 CFR Part 180

[OPP–300399A; FRL–4987–7

RIN 2070–AB78

Octadecanoic Acid, 12-Hydroxy-, Homopolymer, Octadecanoate; Tolerance Exemption

AGENCY: Environmental Protection Agency (EPA).

ACTION: Final rule.

SUMMARY: This rule establishes an exemption from the requirement of a tolerance for residues of octadecanoic acid, 12-hydroxy-, homopolymer, octadecanoate (CAS Reg. No. 58128-22-6) when used as an inert ingredient (surfactant and dispersing agent) in pesticide formulations applied to growing crops or to raw agricultural commodities after harvest, under 40 CFR 180.1001(c). ICI Americas, Inc., requested this regulation pursuant to the Federal Food, Drug and Cosmetic Act (FFDCA).

EFFECTIVE DATE: This regulation becomes effective February 14, 1996.

ADDRESSES: Written objections and hearing requests, identified by the document control number, [OPP-300399A], may be submitted to: Hearing Clerk (1900), Environmental Protection Agency, Rm. M3708, 401 M St., SW., Washington, DC 20460. A copy of any objections and hearing requests filed with the Hearing Clerk should be identified by the document control number and submitted to: Public Response and Program Resources Branch, Field Operations Division

(7506C), Office of Pesticide Programs, Environmental Protection Agency, 401 M St., SW., Washington, DC 20460. In person, bring copy of objections and hearing requests to Rm. 1132, CM #2, 1921 Jefferson Davis Hwy., Arlington, VA 22202. Fees accompanying objections shall be labeled ''Tolerance Petition Fees'' and forwarded to: EPA Headquarters Accounting Operations Branch, OPP (Tolerance Fees), P.O. Box 360277M, Pittsburgh, PA 15251.

An electronic copy of objections and hearing requests filed with the Hearing Clerk may be submitted to OPP by sending electronic mail (e-mail) to:

opp-docket@epamail.epa.gov

Copies of electronic objections and hearing requests must be submitted as an ASCII file avoiding the use of special characters and any form of encryption. Copies of electronic objections and hearing requests will also be accepted on disks in WordPerfect 5.1 file format or ASCII file format. All copies of electronic objections and hearing requests must be identified by the docket number [OPP-300399A] . No Confidential Business Information (CBI) should be submitted through e-mail. Copies of electronic objections and hearing requests on this rule may be filed online at many Federal Depository Libraries. Additional information on electronic submissions can be found below in this document.

FOR FURTHER INFORMATION CONTACT: By mail: Rita Kumar, Registration Support Branch, Registration Division (7505W), Environmental Protection Agency, 401 M St., SW., Washington, DC 20460. Office location and telephone number: 2800 Crystal Drive, North Tower, 6th Floor, Arlington, VA 22202, (703)-308-8811; e-mail: kumar.rita@epamail.epa.gov.

SUPPLEMENTARY INFORMATION: EPA issued a proposed rule, published in the Federal Register of October 25, 1995 (60 FR 54641), which announced that ICI Americas, Inc., Concord Plaza, 3411 Silverside Rd., P.O. Box 15391, Wilmington, DE 19850, had submitted pesticide petition (PP) 5E04506 to EPA requesting that the Administrator, pursuant to section 408(e) of the Federal Food, Drug and Cosmetic Act (FFDCA) (21 U.S.C. 346a(e)), amend 40 CFR 180.1001(c) by exempting octadecanoic acid, 12-hydroxy-, homopolymer, octadecanoate from the requirement of a tolerance when used as an inert ingredient (surfactant and dispersing agent) in pesticide formulations applied to growing crops or to raw agricultural commodiites after harvest, under 40 CFR 180.1001(c). The inert ingredient meets the definition of a polymer under 40 CFR 723.250(b) and the criteria listed in 40 CFR 723.250(e) that define a chemical substance that poses no unreasonable risk under section 5 of the Toxic Substance Control Act (TSCA).

Inert ingredients are all ingredients that are not active ingredients as defined in 40 CFR 153.125 and include, but are not limited to, the following types of ingredients (except when they have a pesticidal efficacy of their own): solvents such as alcohol and hydrocarbons; surfactants such as polyoxyethylene polymers and fatty acids; carriers such as clay and diatomaceouse earth; thickeners such as carrageenan and modified cellulose; wetting, spreading, and dispersing agents; propellants in aerosol dispensers; microencapsulating agents; and emulsifiers. The term ''inert'' is not intended to imply nontoxicity; the ingredient may or may not be chemically active.

The data submitted on the proposal and other relevant material have been evaluated and discussed in the proposed rule. Based on the data and information considered, the Agency concludes that the tolerance exemption will protect the public health. Therefore, tolerance exemption is established as set forth below.

In response to the proposed rule for this inert tolerance exemption action, the Agency received a comment from ICI Surfactants requesting the expansion of its uses to include suspending agent and related adjuvant of surfactant as well as surfactant and dispersing agent. The Agency has decided to make this expansion, accordingly, on the judgement that it poses no additional risk to humans or the environment.

Any person adversely affected by this regulation may, within 30 days after publication of this document in the Federal Register, file written objections to the regulation and may also request a hearing on those objections. Objections and hearing requests must be filed with the Hearing Clerk, at the address given above (40 CFR 178.20). A copy of the objections and/or hearing requests filed with the Hearing Clerk should be submitted to the OPP docket for this rulemaking. The objections submitted must specify the provisions of the regulation deemed objectionable and the grounds for the objections (40 CFR 178.25). Each objection must be accompanied by the fee prescribed by 40 CFR 180.33(i). If a hearing is requested, the objections must include a statement of the factual issue(s) on which a hearing is requested, the requestor's contentions on such issues, and a summary of any evidence relied upon by the objector (40 CFR 178.27). A request for a hearing will be granted if the Administrator determines that the material submitted shows the following: There is genuine and substantial issue of fact; there is a reasonable possibility that available evidence identified by the requestor would, if established, resolve one or more of such issues in favor of the requestor, taking into account uncontested claims or facts to the contrary; and resolution of the factual issue(s) in the manner sought by the requestor would be adequate to justify the action requested (40 CFR 178.32).

EPA has established a record for this rulemaking under docket number [OPP-300399A] (including any comments and data submitted electronically). A public version of this record, including printed, paper versions of electronic comments, which does not include any information claimed as CBI, is available for inspection from 8 a.m. to 4:30 p.m., Monday through Friday, excluding legal holidays. The public record is located in Room 1132 of the Public Response and Program Resources Branch, Field Operations Division (7506C), Office of Pesticide Programs, Environmental Protection Agency, Crystal Mall 1B2, 1921 Jefferson Davis Highway, Arlington, VA.

Electronic comments may be sent directly to EPA at:

opp-docket@epamail.epa.gov.

Electronic comments must be submitted as an ASCII file avoiding the use of special characters and any form of encryption.

The official record for this rulemaking, as well as the public version, as described above will be kept in paper form. Accordingly, EPA will transfer any copies of objections and hearing requests received electronically into printed, paper form as they are received and will place the paper copies in the official rulemaking record which will also include all comments submitted directly in writing. The official rulemaking record is the paper record maintained at the address in ''ADDRESSES'' at the beginning of this document.

Under Executive Order 12866 (58 FR 51735, October 4, 1993), the Agency must determine whether the regulatory action is ''significant'' and therefore subject to all the requirements of the Executive Order (i.e., Regulatory Impact Analysis, review by the Office of Management and Budget (OMB)). Under section 3(f), the order defines ''significant'' as those actions likely to lead to a rule (1) having an annual effect on the economy of $100 million or more, or adversely and materially affecting a sector of the economy, productivity, competition, jobs, the

environment, public health or safety, or State, local or tribal governments or communities (also known as ''economically significant''); (2) creating serious inconsistency or otherwise interfering with an action taken or planned by another agency; (3) materially altering the budgetary impacts of entitlement, grants, user fees, or loan programs; or (4) raising novel legal or policy issues arising out of legal mandates, the President's priorities, or the principles set forth in this Executive Order.

Pursuant to the terms of this Executive Order, EPA has determined that this rule is not ''significant'' and is therefore not subject to OMB review.

Pursuant to the requirements of the Regulatory Flexibility Act (Pub. L. 96-354, 94 Stat. 1164, 5 U.S.C. 601-612), the Administrator has determined that regulations establishing new tolerances or raising tolerance levels or establishing exemptions from tolerance requirements do not have a significant economic impact on a substantial number of small entities. A certification statement to this effect was published in the Federal Register of May 4, 1981 (46 FR 24950).

List of Subjects in 40 CFR Part 180

Environmental protection, Administrative practice and procedure, Agricultural commodities, Pesticides and pests, Reporting and recordkeeping requirements.

Dated: February 1, 1996.

Stephen L. Johnson,

Director, Registration Division, Office of Pesticide Programs.

Therefore, 40 CFR part 180 is amended as follows:

PART 180—[AMENDED]

1. The authority citation for part 180 continues to read as follows:

Authority: 21 U.S.C. 346a and 371.

2. Section 180.1001(c) is amended in the table therein by adding and alphabetically inserting the inert ingredient, to read as follows:

§ 180.1001 Exemptions from the requirement of a tolerance.

* * * * *

(c) * * *

Inert ingredient	Limits	Uses
* * * * * * *		
Octadecanoic acid, 12-hydroxy-, homopolymer, octadecanoate (CAS Reg. No. 58128-22-6), minimum number-average molecular weight 1,370..	.....	dispersing agent, related adjuvant of surfactants, surfactant, suspending agent.
* * * * * * *		

* * * * *

[FR Doc. 96–3021 Filed 2–13–96; 8:45 am]

BILLING CODE 6560–50–F

40 CFR Part 180

[PP PP 5F4534/R2199; FRL–4995–2]

RIN 2070–AC18

Imidacloprid; Pesticide Tolerance

AGENCY: Environmental Protection Agency (EPA).

ACTION: Final rule.

SUMMARY: This rule establishes a tolerance for residues of the insecticide 1-[(6-chloro-3-pyridinyl)methyl]-N-nitro-2-imidazolidinimine) (proposed common name ''imidacloprid'') and its metabolites in or on canola seed. Gustafson, Inc. requested this regulation to establish maximum permissible levels for residues of the insecticide.

EFFECTIVE DATE: This regulation became effective February 7, 1996.

ADDRESSES: Written objections and hearing requests, identified by the docket control number, [PP 5F4534/R2199], may be submitted to: Hearing Clerk (A–110), Environmental Protection Agency, Rm. M3708, 401 M St., SW., Washington, DC 20460. A copy of any objections and hearing requests filed with the Hearing Clerk should be identified by the docket control number and submitted to: Public Response and Program Resources Branch, Field Operations Division (7506C), Office of Pesticide Programs, Environmental Protection Agency, 401 M St., SW., Washington, DC 20460. In person, bring copy of objections and hearing requests to Rm. 1132, CM #2, 1921 Jefferson Davis Hwy., Arlington, VA. Fees accompanying objections shall be labeled ''Tolerance Petition Fees'' and forwarded to: EPA Headquarters Accounting Operations Branch, OPP (Tolerance Fees), P.O. Box 360277M, Pittsburgh, PA 15251.

An electronic copy of objections and hearing requests filed with the Hearing Clerk may be submitted to OPP by sending electronic mail (e-mail) to:

opp-docket@epamail.epa.gov

Copies of electronic objections and hearing requests must be submitted as an ASCII file avoiding the use of special characters and any form of encryption. Copies of electronic objections and hearing requests will also be accepted on disks in WordPerfect 5.1 file format or ASCII file format. All copies of electronic objections and hearing requests must be identified by the docket number [PP 5F4534/R2199]. No Confidential Business Information (CBI) should be submitted through e-mail. Copies of electronic objections and hearing requests on this rule may be filed online at many Federal Depository Libraries. Additional information on electronic submissions can be found below in this document.

FOR FURTHER INFORMATION CONTACT: By mail: Dennis H. Edwards, Jr., Product Manager (PM 19), Registration Division (7505C), Office of Pesticide Programs, Environmental Protection Agency, 401 M St., SW., Washington, DC 20460. Office location, telephone number, and e-mail address: Rm. 207, CM #2 1921 Jefferson Davis Highway, Arlington, VA, (703) 305-6386; e-mail: edwards.dennis@epamail.epa.gov.

SUPPLEMENTARY INFORMATION: EPA issued a notice published in the Federal Register of August 17, 1995 (60 FR 42884), which announced that Gustafson, Inc., P.O. Box 660065, Dallas, TX 75266-0065, had submitted to amend 40 CFR part 180 by establishing a regulation to permit residues of the insecticide (1-[6-chloro-3-pyridinyl) methyl]-N-nitro-2-imidazolidinime, in or on the raw agricultural commodity canola seed at 0.05 parts per million (ppm).

The Agency is currently issuing a 2-year conditional registration for use of ''imidacloprid'' on canola seed. Additional residue trials are needed. On June 2, 1994, the Agency issued a guidance document on crop residue trials. Among other things, this document provided guidance on the number and location of domestice crop field trials for establishment of pesticide residue trials. Based on this guidance document, the Agency determined that additional field trials are needed for canola. However, the Agency does not believe that this data will significantly change its risk assessment.

The scientific data submitted in the petition and other relevant material have been evaluated. The toxicological data considered in support of the tolerance include:

1. A three-generation rat reproduction study with no-observed-effect level (NOEL) of 100 ppm (8 mg/kg/bwt); rat and rabbit developmental toxicity studies were negative at doses up to 30 mg/kg/bwt, respectively.

2. A 2-year rat feeding/carcinogenicity study that was negative for carcinogenic effects under the conditions of the study and had a NOEL of 100 ppm (5.7 mg/kg/bwt in male and 7.6 mg/kg/bwt female) for noncarcinogenic effects that included decrease body weight gain in females at 300 ppm and increased thyroid lesions in males at 300 ppm and females at 900 ppm.

3. A 1-year dog feeding study with a NOEL of 1,250 ppm (41/mg/kg/bwt).

4. A 2-year mouse carcinoginicity study that was negative for carcinogenic effects under conditions of the study and that had a NOEL of 1,000 ppm (208/mg/kg/day).

There is no cancer risk associated with exposure to this chemical. Imidacloprid has been classified under ''Group E'' (no evidence of carcinogenicity) by EPA's OPP/HED's Reference Dose (RFD) Committee.

The reference dose (RfD) based on the 2-year rat feeding/ carcinogenic study with a NOEL of 5.7 mg/kg/bwt and 100-fold uncertainity factor, is calculated to be 0.057 mg/kg/bwt. The theoretical maximum residue contribution (TMRC) for published uses is 0.008189 mg/kg/bwt/day utilizing 14.4% of the RFD. The proposed tolerance will increase the TMRC by .000077 mg/kg/day representing an increase in the ADI of 1.5%. The TMRC will be .008266 mg/kg/day utilizing 15.9% of the RFD. For exposure of subgroups in the population, children (1-6), the TMRC for the published and proposed tolerances is 0.016934 mg/kg/day. This is equal to 29.7% of the RFD. Dietary exposure from the existing uses and proposed use will not exceed the reference dose for any subpopulation (including infants and children) based on the information available from EPA's Dietary Risk Evaluation System.

The nature of the imidacloprid residue in plants and livestock is adequately understood. The residues of concern are combined residues of imidacloprid and its metabolites containing the 6-chloropyridinyl moiety, all calculated as imidacloprid. The analytical method is a common moiety method for imidacloprid and its metabolites containing the 6-chloropyridinyl moiety using a permanganate oxidation, silyl derivatization, and capillary GC-MS selective ion monitoring. Imidacloprid and its metabolites are stable in the commodities when frozen for at least 24 months. There are adequate amounts of geographically representative crop field trial data to show that combined residues of imidacloprid and its metabolites, all calculated as imidacloprid will not exceed the proposed tolerance when used as directed. Canola meal is a livestock feedstuff ruminant, and poultry feeding studies show transfer of imidacloprid from feedstuff to meat, milk, poultry, and eggs. The secondary tolerances in meat, milk, poutry, eggs are adequate to cover the additional use on canola.

There are presently no actions pending against the continued registration of this chemical.

This pesticide is considered useful for the purposes for which the tolerance is sought and capable of achieving the intended physical or technical effect. Based on the information and data considered, the Agency has determined that the tolerance established by amending 40 CFR part 180 will protect the public health. Therefore, the tolerance is established as set forth below.

Any person adversely affected by this regulation may, within 30 days after publication of this document in the Federal Register, file written objections to the regulation and may also request a hearing on those objections. Objections and hearing requests must be filed with the Hearing Clerk, at the address given above (40 CFR 178.20). A copy of the objections and/or hearing requests filed with the Hearing Clerk should be submitted to the OPP docket for this rulemaking. The objections submitted must specify the provisions of the regulation deemed objectionable and the grounds for the objections (40 CFR 178.25). Each objection must be accompanied by the fee prescribed by 40 CFR 180.33(i). If a hearing is requested, the objections must include a statement of the factual issue(s) on which a hearing is requested, the requestor's contentions on such issues, and a summary of any evidence relied upon by the objector (40 CFR 178.27). A request for a hearing will be granted if the Administrator determines that the material submitted shows the following: There is genuine and substantial issue of fact; there is a reasonable possibility that available evidence identified by the requestor would, if established, resolve one or more of such issues in favor of the requestor, taking into account uncontested claims or facts to the contrary; and resolution of the factual issue(s) in the manner sought by the requestor would be adequate to justify the action requested (40 CFR 178.32).

A record has been established for this rulemaking under docket number [PP 5F4535/R2199] (including any comments and data submitted electronically). A public version of this record, including printed, paper versions of electronic comments, which does not include any information claimed as CBI, is available for inspection from 8 a.m. to 4 p.m., Monday through Friday, excluding legal holidays. The public record is located in Room 1132 of the Public Response and Program Resources Branch, Field Operations Division (7506C), Office of Pesticide Programs, Environmental Protection Agency, Crystal Mall #2, 1921 Jefferson Davis Highway, Arlington, VA.

The official record for this rulemaking, as well as the public version, as described above will be kept in paper form. Accordingly, EPA will transfer any copies of objections and hearing requests received electronically into printed, paper form as they are received and will place the paper copies in the official rulemaking record which will also include all comments submitted directly in writing. The official rulemaking record is the paper record maintained at the address in ''ADDRESSES'' at the beginning of this document.

Under Executive Order 12866 (58 FR 51735, October 4, 1993), the Agency must determine whether the regulatory action is ''significant'' and therefore subject to all the requirements of the Executive Order (i.e., Regulatory Impact Analysis, review by the Office of Management and Budget (OMB)). Under section 3(f), the order defines ''significant'' as those actions likely to lead to a rule: (1) Having an annual effect on the economy of $100 million or more, or adversely and materially affecting a sector of the economy, productivity, competition, jobs, the environment, public health or safety, or

State, local or tribal governments or communities (also known as ''economically significant''); (2) creating serious inconsistency or otherwise interfering with an action taken or planned by another agency; (3) materially altering the budgetary impacts of entitlement, grants, user fees, or loan programs; or (4) raising novel legal or policy issues arising out of legal mandates, the President's priorities, or the principles set forth in this Executive Order.

Pursuant to the terms of this Executive Order, EPA has determined that this rule is not ''significant'' and is therefore not subject to OMB review.

Pursuant to the requirements of the Regulatory Flexibility Act (Pub. L. 9–354, 94 Stat. 1164, 5 U.S.C. 601–612), the Administrator has determined that regulations establishing new tolerances or raising tolerance levels or establishing exemptions from tolerance requirements do not have a significant economic impact on a substantial number of small entities. A certification statement to this effect was published in the Federal Register of May 4, 1981 (46 FR 24950).

List of Subjects in 40 CFR Part 180

Environmental protection, Administrative practice and procedure, Agricultural commodities, Pesticides and pests, Reporting and recordkeeping requirements.

Dated: February 7, 1996.

Stephen L. Johnson,

Director, Registration Division, Office of Pesticide Programs.

Therefore, 40 CFR part 180 is amended as follows:

PART 180—[AMENDED]

1. The authority citation for part 180 continues to read as follows:

Authority: 21 U.S.C. 346a and 371.

2. In § 180.472, by amending paragraph (a) in the table therein by adding and alphabetically inserting the following commodity to read as follows:

§ 180.472 1-[(6-Chloro-3-pyridinyl)methyl]-N-nitro-2-imidazolidinimine; tolerances for residues.

(a) * * *

Commodities	Parts per million
* * * * *	
Canola	0.05
* * * * *	

Residues in these commodities not in excess of the established tolerances resulting from the use described in this paragraph remaining after expiration of the conditional registration will not be considered to be actionable if the insecticide is applied during the term of and in accordance with the provisions of the above regulation.

* * * * *

[FR Doc. 96–3280 Filed 2–13–96; 8:45 am]

BILLING CODE 6560–50–F

40 CFR Part 180

[PP 4F4396/R2202; FRL–5348–9]

RIN 2070–AC78

Pelargonic Acid; Exemption From the Requirement of a Tolerance on Apples and Pears

AGENCY: Environmental Protection Agency (EPA).

ACTION: Final rule.

SUMMARY: This rule establishes an exemption from the requirement of a tolerance for residues of pelargonic acid when used as a blossom thinning agent on apples and pears. A request for an exemption from the requirement of a tolerance was submitted by Mycogen Corporation. This regulation eliminates the need to establish a maximum permissible level for residues of this plant regulator on apples and pears.

EFFECTIVE DATE: Effective on February 14, 1996.

ADDRESSES: Written objections and hearing requests, identified bythe docket number [PP 4F4396/R2202] may be submitted to: Hearing Clerk (1900), Environmental Protection Agency, Rm. M3708, 401 M St., SW., Washington, DC 20460. A copy of any objections and hearing requests filed with the Hearing Clerk should be identified by the document control number and submitted to: Public Response and Program Branch, Field Operations Division (7506C), Office of Pesticide Programs, Environmental Protection Agency, 401 M St. SW., Washington, DC 20460. In person, bring copy of objections and hearing requests to: Rm. 1132, CM #2, 1921 Jefferson Davis Highway, Arlington, VA. 22202. Fees accompanying objections shall be labeled ''tolerance Petition Fees'' and forwarded to: EPA Headquarters Accounting Operations Branch, OPP (tolerance Fees) P.O. Box 360277M, Pittsburgh, PA 15251.

FOR FURTHER INFORMATION CONTACT: By mail: Mike Mendelsohn, Biopesticides and Pollution Prevention Division, Office of Pesticide Programs, U. S. Environmental Protection Agency, 401 M St., SW., Washington, DC 20460. Office location and telephone number: 5th Floor CS, 2800 Crystal Drive, Arlington, VA 22202, (Telephone No. (703)–308–8715), e-mail: mendelsohn.mike@epamail.epa.gov.

SUPPLEMENTARY INFORMATION: EPA issued a notice, published in the Federal Register of February 8, 1995 (60 FR 7539), which announced that Mycogen Corporation, 4980 Carroll Canyon Rd., San Diego, CA 92121 had submitted a pesticide petition (PP) 4F4396 to EPA requesting that the Administrator, pursuant to section 408(d) of the Federal Food, Drug, and Cosmetic Act (FFDCA), 21 U.S.C. 346a(d), establish an exemption from the requirement of a tolerance for the plant growth regulator pelargonic acid on apples and pears.

There were no adverse comments, or requests for referral to an advisory committee received in response to the notice of filing of the PP 4F4396.

I. Existing Food Clearances

Pelargonic acid is an approved secondary direct food additive under 21 CFR 173.315 for use in the lye peeling of fruits and vegetables. An aliphatic acid mixture of valeric, caproic, enanthoic, caprylic and pelargonic acids may be used at a level not to exceed 1 percent in a lye peeling solution. The conditions for use include a stipulation that following the use of chemicals cleared under 21 CFR 173.315 the fruit

and vegetables must be rinsed with potable water to remove, to the extent possible, residues of the chemical.

Pelargonic acid is listed by the U.S. Department of Agriculture under the USDA List of Authorized Substances, 1990, section 5.14, Fruit and Vegetable Washing Compounds.

Pelargonic acid is approved as part of a sanitizing solution for use on food-processing equipment and utensils, and dairyprocessing equipment. Its use must be in combination with decanoic acid, phosphoric acid, propionic acid, and sodium 1octanesulfonate. The pelargonic acid-containing sanitizing solution must be drained from the treated equipment and utensils before contact with food. (21 CFR 178.1010(b)(42))

Pelargonic acid also is approved as a synthetic food flavoring agent (21 CFR 172.515) provided the minimum quantity required to produce its intended effect is used in accordance with the principles of good manufacturing practice.

II. Pelargonic Acid Natural Occurrence and Treated Apple Residue Data

Pelargonic acid is naturally present at levels up to 224 parts per billion (ppb) in apples, 385 parts per million (ppm) in the skin of grapes, and 143 ppm in grape pulp. It has been determined to be present in a number of other foods as well. The highest residues of pelargonic acid reported in apples subsequent to blossom treatment were less than 360 ppb.

A. Toxicology Assessment; Supporting Data

1. *Acute toxicology of a 60% pelargonic acid emulsifiable concentrate.*

Acute Oral LD_{50} > 5,000 mg/kg
Acute Dermal LD_{50} > 2,000 mg/kg
Acute Inhalation LC_{50} = 5.29 mg/L
Primary Dermal Irritation - Moderate Irritant
Primary Eye Irritation - Severe Irritant
Dermal Sensitization - Non-sensitizer

2. *Mammalian cells in culture gene mutation assay in mouse lymphoma cells (L5178Y TK ±).* Pelargonic acid was considered weakly positive for inducing mutations at the TK locus of culture mouse L5178Y TK ± cells in the presence of S9-induced metabolic activation. Mutations were induced at levels greater than or equal to 50 µg/ml. However, this occurred in the presence of increasing moderate-to-severe cytotoxicity and small colony development and may reflect gross chromosomal changes or damage rather than actual mutational changes within the TK gene locus.

3. *In vivo mammalian cytogenetics - mouse micronucleus assay.* In an *in vivo* mouse micronucleus assay, groups of ICR mice (15/sex/dose) were administered single oral doses of 1,250, 2,500, and 5,000 mg/kg *n*-pelargonic acid. The bone marrow cells were harvested 24, 48, and 72 hours post-treatment. No significant increases in the frequency of micronucleated polychromatic erythrocytes (PCEs) were observed in either sex at any dose; thus, *n*-pelargonic acid was negative in the micronucleus assay.

4. *Reverse gene mutation assay (Ames Test).* Pelargonic acid was not mutagenic under the conditions of the study.

5. *Metabolism.* Pelargonic acid is a naturally occurring, nine-carbon saturated fatty acid. The oxidative degradation of fatty acids is a central metabolic pathway in both animals and plants. Fatty acids of varying chain lengths are metabolized into two-carbon fragments through a sequence of enzyme-catalyzed reactions. The metabolic products are then incorporated into fats, carbohydrates and amino acids.

6. *Carcinogenicity.* A summary of the results of a dermal carcinogenicity study in mice with pelargonic acid was submitted. Fifty mice were treated twice-weekly with 50 mg doses of undiluted pelargonic acid for 80 weeks. No evidence of severe dermal or systemic toxicity was seen. Histopathology revealed no tumors of the skin or the internal organs.

7. *Developmental toxicity.* The results of a developmental toxicity study in rats with pelargonic acid was submitted. Groups of 22 pregnant CD rats were given oral administration of 0 mg (corn oil) or 1,500 mg/kg pelargonic acid during days 6 through 15 of gestation. No evidence of maternal toxicity was seen. Maternal body weights and weight gain were comparable to that of the controls. No treatment-related effects were seen at C-section. No developmental toxicity was seen. Based on the above information, EPA concludes that the quantity of pelargonic acid that is proposed for use will not be harmful to humans since:

(1) The lowest level shown to weakly induce mutations in an *in vitro* test system in the presence of cytotoxicity was at the 50,000 parts per million level and the highest residues seen in treated apples were less than 360 parts per billion (ppb).

(2) Other than weak mutation at high levels in an *in vitro* test system and eye irritation, the data on pelargonic acid show no other adverse effects.

(3) The maximum application rate of pelargonic acid for blossom-thinning is 4.2 pounds per acre in a spray solution containing up to 0.31% pelargonic acid.

(4) Pelargonic acid is applied before fruit set.

B. Analytical Enforcement Method

This rule establishes an exemption from the requirement of a tolerance; therefore, the Agency has concluded that a analytical method is not required for enforcement purposes for pelargonic acid.

III. Conclusion

Based on the low toxicity of pelargonic acid and the low residue levels expected in apples and pears, the Agency concludes that establishment of a tolerance is not necessary to protect the public health for blossom thinning uses. Therefore, the exemption from tolerance is established as set forth below.

IV. Filing of Objections

Any person adversely affected by this regulation may, within 30 days after publication of this document in the Federal Register, file written objections to the regulation and may also request a hearing on those objections. Objections and hearing requests must be filed with the Hearing Clerk, at the address given above (40 CFR 178.20). A copy of the objections and/or hearing requests filed with the Hearing Clerk should be submitted to the OPP docket for this rulemaking. The objections submitted must specify the provisions of the regulation deemed objectionable and the grounds for the objections (40 CFR 178.25). Each objection must be accompanied by the fee prescribed by 40 CFR 180.33(i). If a hearing is requested, the objections must include a statement of the factual issue(s) on which a hearing is requested, the requestor's contentions on such issues, and a summary of any evidence relied upon by the objector (40 CFR 178.27). A request for a hearing will be granted if the Administrator determines that the material submitted shows the following: There is genuine and substantial issue of fact; there is a reasonable possibility that available evidence identified by the requestor would, if established, resolve one or more of such issues in favor of the requestor, taking into account uncontested claims or facts to the contrary; and resolution of the factual issue(s) in the manner sought by the requestor would be adequate to justify the action requested (40 CFR 178.32).

V. Regulatory Assessment Requirements

A. Executive Order 12866

Under Executive Order 12866 (58 FR 51735, October 4, 1993), the Agency must determine whether the regulatory action is ''significant'' and therefore subject to all the requirements of the Executive Order (i.e., Regulatory Impact Analysis, review by the Office of Management and Budget (OMB)). Under section 3(f), the order defines ''significant'' as those actions likely to lead to a rule (1) having an annual effect on the economy of $100 million or more, or adversely and materially affecting a sector of the economy, productivity, competition, jobs, the environment, public health or safety, or State, local or tribal governments or communities (also known as ''economically significant''); (2) creating serious inconsistency or otherwise interfering with an action taken or planned by another agency; (3) materially altering the budgetary impacts of entitlement, grants, user fees, or loan programs; or (4) raising novel legal or policy issues arising out of legal mandates, the President's priorities, or the principles set forth in this Executive Order.

Pursuant to the terms of this Executive Order, EPA has determined that this rule is not ''significant'' and is therefore not subject to OMB review.

B. Regulatory Flexibility Act

Pursuant to the requirements of the Regulatory Flexibility Act (Pub. L. 96–354, 94 Stat. 1164, 5 U.S.C. 601–612), the Administrator has determined that regulations establishing new tolerances or raising tolerance levels or establishing exemptions from tolerance requirements do not have a significant economic impact on a substantial number of small entities. A certification statement to this effect was published in the Federal Register of May 4, 1981 (46 FR 24950).

List of Subjects in 40 CFR Part 180

Environmental protection, Administrative practice and procedure, Agricultural commodities, Pesticides and pests, Reporting and recordkeeping requirements.

Dated: February 6, 1996.

Daniel1 M. Barolo,

Director, Office of Pesticide Programs.

PART 180—[AMENDED]

Therefore, 40 CFR Part 180 is amended as follows:

1. The authority citation for part 180 continues to read as follows:

Authority: 21 U.S.C. 346a and 371.

2. In subpart D, by adding § 180.1159, to read as follows:

§ 180.1159 Pelargonic acid.

Pelargonic acid is exempt from the requirement of a tolerance on apples and pears provided it is used as a blossom thinner only and is in a dilution of 100 gallons of water applied to blooms at a rate not to exceed 4.2 lbs/acre with the maximum number of applications not exceeding two per year.

[FR Doc. 96–3278 Filed 2–13–96; 8:45 am]

BILLING CODE 6560–50–F

---

40 CFR Part 271

[FRL–5420–5]

Alabama; Final Authorization of a Revision to State Hazardous Waste Management Program

AGENCY: Environmental Protection Agency.

ACTION: Immediate final rule.

SUMMARY: Alabama has applied for final authorization of a revision to its hazardous waste program under the Resource Conservation and Recovery Act (RCRA). Alabama's revision consists of the Corrective Action provision contained in HSWA Cluster I. This requirement is listed in Section B of this document. The Environmental Protection Agency (EPA) has reviewed Alabama's application and has made a decision, subject to public review and comment, that Alabama's hazardous waste program revision satisfies all of the requirements necessary to qualify for final authorization. Thus, EPA intends to approve Alabama's hazardous waste program revision. Alabama's application for program revision is available for public review and comment.

DATES: Final authorization for Alabama's program revision shall be effective April 15, 1996, unless EPA publishes a prior Federal Register action withdrawing this immediate final rule. All comments on Alabama's program revision application must be received by the close of business, March 15, 1996.

ADDRESSES: Copies of Alabama's program revision application are available during 8:00 am to 4:30 pm at the following addresses for inspection and copying: Alabama Department of Environmental Management, 1751 Congressman W.L. Dickinson Drive, Montgomery, Alabama 36109–2608, (334) 271–7700; U.S. EPA, Region 4, Library, 345 Courtland Street, NE, Atlanta, Georgia 30365; (404) 347–4216. Written comments should be sent to Al Hanke at the address listed below.

FOR FURTHER INFORMATION CONTACT: Al Hanke, Chief, State Programs Section, Waste Programs Branch, Waste Management Division, U.S. Environmental Protection Agency, 345 Courtland Street, NE, Atlanta, Georgia 30365; (404) 347–2234 vmx 2018.

SUPPLEMENTARY INFORMATION:

A. Background

States with final authorization under Section 3006(b) of the Resource Conservation and Recovery Act (''RCRA'' or ''the Act''), 42 U.S.C. 6926(b), have a continuing obligation to maintain a hazardous waste program that is equivalent to, consistent with, and no less stringent than the Federal hazardous waste program. In addition, as an interim measure, the Hazardous and Solid Waste Amendments of 1984 (Pub. L. 98–616, November 8, 1984, hereinafter ''HSWA'') allows States to revise their programs to become substantially equivalent instead of equivalent to RCRA requirements promulgated under HSWA authority.

States exercising the latter option receive ''interim authorization'' for the HSWA requirements under Section 3006(g) of RCRA, 42 U.S.C. 6926(g), and later apply for final authorization for the HSWA requirements. Revisions to State hazardous waste programs are necessary when Federal or State statutory or regulatory authority is modified or when certain other changes occur. Most commonly, State program revisions are necessitated by changes to EPA's regulations in 40 CFR Parts 124, 260–268 and 270.

B. Alabama

Alabama initially received final authorization for its base RCRA program effective on December 22, 1987. Alabama received authorization for revisions to its program on January 28, 1992, July 12, 1992, December 21, 1992, May 17, 1993, November 23, 1993, April 4, 1994, January 13, 1995 and October 13, 1995. On March 1, 1990, Alabama submitted a program revision application for additional program approvals. Today, Alabama is seeking approval of its program revision in accordance with 40 CFR 271.21(b)(3).

EPA has reviewed Alabama's application and has made an immediate final decision that Alabama's hazardous waste program revision satisfies all of the requirements necessary to qualify for final authorization. Consequently,

EPA intends to grant final authorization for the additional program modification to Alabama. The public may submit written comments on EPA's immediate final decision up until March 15, 1996.

Copies of Alabama's application for this program revision are available for inspection and copying at the locations indicated in the **ADDRESSES** section of this notice. Approval of Alabama's program revisions shall become effective April 15, 1996, unless an adverse comment pertaining to the State's revision discussed in this notice is received by the end of the comment period.

If an adverse comment is received EPA will publish either (1) a withdrawal of the immediate final decision or (2) a notice containing a response to comments which either affirms that the immediate final decision takes effect or reverses the decision.

EPA shall administer any RCRA hazardous waste permits, or portions of permits that contain conditions based upon the Federal program provisions for which the State is applying for authorization and which were issued by EPA prior to the effective date of this authorization. EPA will suspend issuance of any further permits under the provisions for which the State is being authorized on the effective date of this authorization.

Alabama is today seeking authority to administer the following Federal requirement promulgated on July 15, 1985, for Corrective Action.

Federal requirement	FR reference	FR promulgation date	State authority
Checklist 17L HSWA Codification Rule; Corrective Action	50 FR 28702	7/15/85	335–14–5–.06(1)(a). 335–14–5–.06(12)(a)(b). 335–14–8–.06.

Alabama's application for this program revision meets all of the statutory and regulatory requirements established by RCRA. Accordingly, Alabama is granted final authorization to operate its hazardous waste program as revised.

Alabama now has responsibility for permitting treatment, storage, and disposal facilities within its borders and carrying out other aspects of the RCRA program, subject to the limitations of its program revision application and previously approved authorities. Alabama also has primary enforcement responsibilities, although EPA retains the right to conduct inspections under Section 3007 of RCRA and to take enforcement actions under Sections 3008, 3013, and 7003 of RCRA.

Compliance With Executive Order 12866

The Office of Management and Budget has exempted this rule from the requirements of Section 6 of Executive Order 12866.

Certification Under the Regulatory Flexibility Act

Pursuant to the provisions of 5 U.S.C. 605(b), I hereby certify that this authorization will not have a significant economic impact on a substantial number of small entities. This authorization effectively suspends the applicability of certain Federal regulations in favor of Alabama's program, thereby eliminating duplicative requirements for handlers of hazardous waste in the State. It does not impose any new burdens on small entities. This rule, therefore, does not require a regulatory flexibility analysis.

List of Subjects in 40 CFR Part 271

Environmental protection, Administrative practice and procedure, Confidential business information, Hazardous materials transportation, Hazardous waste, Indian lands, Intergovernmental relations, Penalties, Reporting and recordkeeping requirements, Water pollution control, Water supply.

Authority: This notice is issued under the authority of Sections 2002(a), 3006, and 7004(b) of the Solid Waste Disposal Act as amended (42 U.S.C. 6912(a), 6926, 6974(b)).

Dated: January 31, 1996.

Phyllis P. Harris,

Acting Regional Administrator.

[FR Doc. 96–3026 Filed 2–13–96; 8:45 am]

BILLING CODE 6560–50–P

DEPARTMENT OF THE INTERIOR

Bureau of Land Management

43 CFR Public Land Order 7184

[OR–958–1430–01; GP6–0038; OR–50500]

Withdrawal of National Forest System Lands to Protect the Elk River Wild and Scenic Corridor; Oregon

AGENCY: Bureau of Land Management, Interior.

ACTION: Public land order.

SUMMARY: This order withdraws 4,921 acres of National Forest System lands in the Siskiyou National Forest from mining for a period of 20 years to protect the recreational and visual resources of the Elk River Wild and Scenic Corridor. The lands have been and will remain open to such forms of disposition as may by law be made of National Forest System lands and to mineral leasing.

EFFECTIVE DATE: February 14, 1996.

FOR FURTHER INFORMATION CONTACT: Betty McCarthy, BLM, Oregon/Washington State Office, P.O. Box 2965, Portland, Oregon 97208–2965, 503–952–6155.

By virtue of the authority vested in the Secretary of the Interior by Section 204 of the Federal Land Policy and Management Act of 1976, 43 U.S.C. 1714 (1988), it is ordered as follows:

1. Subject to valid existing rights, the following described National Forest System lands are hereby withdrawn from location and entry under the United States mining laws (30 U.S.C. Ch. 2 (1988)), but not from leasing under the mineral leasing laws, to protect the significant recreational and visual resources along the Elk River Wild and Scenic Corridor:

Willamette Meridian

Siskiyou National Forest

Tracts of land located within the following described townships and sections as more particularly identified and described below:

T. 33 S., R. 13 W.,

Secs. 13 to 24, inclusive, secs. 29 and 30.

T. 33 S., R. 14 W.,

Secs. 7, 8, 13, 15, 16, 17, and secs. 20 to 24, inclusive; Beginning at the northeast corner of the SW¼NE¼ of sec. 7, T. 33 S., R. 14 W.; Thence westerly to the northwest corner of the SW¼NE¼ of sec. 7; Thence southerly to the south quarter corner of sec. 7; Thence easterly to the southeast corner of sec. 7; Thence southerly along the west boundary of sec. 17 to the northwest corner of the SW¼SW¼ of sec. 17; Thence easterly to the southwest corner of the E½NW¼SW¼ of sec. 17; Thence northerly to the northwest corner of the E½NW¼SW¼ of sec. 17; Thence easterly to the northeast corner of the W½NE¼SW¼ of sec. 17; Thence southerly to the southeast corner of the W½SE¼SW¼ of sec. 17; Thence

easterly along the south boundary of sec.17 to the south quarter corner of sec. 17; Thence southerly along the north-south centerline of sec. 20 to the northeasterly right-of-way of Forest Service (FS) road 5502 020 as described in Curry County Book of Records 1, pages 308 and 429; Thence easterly along said northeasterly right-of-way line to the east boundary of sec. 20, EXCEPT that portion of land in the NE¼ and northeast of the road as described in deed to Maude S. Kohl, et al., recorded June 20, 1969, in Book 11 page 313 of Curry County; Thence northerly to the northeast corner of the SE¼NE¼ of sec. 20; Thence southeasterly to the summit of Pearce Peak; Thence easterly along the ridge to the summit of Purple Mountain; Thence southeasterly along the ridge to the east-west centerline of sec. 22; Thence easterly along said centerline to the northeast corner of the SW¼ of sec. 22; Thence southerly along the north-south centerline of sec. 22 to the divide between Bald Mountain Creek and Elk River; Thence southeasterly along said divide to the northerly most point of Father Mountain; Thence northeasterly to the east quarter corner of sec. 23; Thence northeasterly to a point in an unnamed tributary to Elk River at 42°42′15.45″ N., 124°18′32.56″ W.; Thence northeasterly to a point in a borrow pit and 50 foot offset from FS Road No. 5325 180 at 42°42′31.08″ N., 124°18′26.24″ W.; Thence easterly and parallel to said FS road at a 50 foot northerly offset to a point at 42°42′27.22″ N., 124°17′47.98″ W.; Thence northeasterly to a point at the end of FS Road No. 5325 182 at 42°42′40.41″ N., 124°17′22.11″ W.; Thence northeasterly to a point on the divide between Panther Creek and Elk River at 42°42′49.13″ N., 124°17′07.24″ W.; Thence southerly to 42°42′44.66″ N., 124°17′04.49″ W.; Thence southerly to 42°42′36.55″ N., 124°17′04.22″ W.; Thence southwesterly to 42°42′21.93″ N., 124°17′13.85″ W.; Thence southeasterly to 42°42′15.44″ N., 124°17′09.72″ W.; Thence southwesterly to 42°42′08.94″ N., 124°17′11.10″ W.; Thence southerly to the junction of the West Fork and Main Fork of Panther Creek; Thence southeasterly along the thread of the Main Fork to the junction of the East Fork of Panther Creek; Thence northeasterly to the west sixteenth corner of secs. 20 and 29, T. 33 S., R. 13 W.; Thence northeasterly to the north quarter of sec. 20; Thence northeasterly to a point at the end of a logging spur on a prominent ridge at 42°43′03.31″ N., 124°15′52.92″ W.; Thence following said ridge and logging spur, southeasterly to a point at a 50 foot northerly offset from FS Road No. 5544; Thence parallel to said road at a 50 foot northerly offset to a point on the ridge where the road turns southerly at 42°43′19.14″ N., 124°15′35.57″ W.; Thence southeasterly to a point at the end of FS Road 5544 040 at 42°43′13.04″ N., 124°14′36.19″ W.; Thence southeasterly to the south quarter of sec. 15; Thence southeasterly to a point in Blackberry Creek at 42°42′37.34″ N., 124°13′41.38″ W.; Thence southeasterly following spur ridge to divide between McCurdy Creek and Blackberry Creek; Thence easterly and northerly along ridge to a 50 foot southerly offset from FS Road No. 5325 starting at 42°42′07.12″ N., 124°12′48.52″ W. to 42°42′08.54″ N., 124°12′38.61″ W. to 42°42′16.05″ N., 124°12′19.62″ W. to 42°42′28.23″ N., 124°12′20.18″ W. to 42°42′36.75″′ N., 124°12′27.34″ W. to 42°42′49.14″ N., 124°12′26.52″ W.; Thence easterly to a point in the south fork of Elk River at 42°42′49.75″ N., 124°12′09.18″ W.; Thence northwesterly along thread of South Fork of Elk River to junction with the Main and North Forks of Elk River; Thence northwesterly to 42°43′07.00″ N., 124°12′25.16″ W.; Thence northwesterly to 42°43′12.68″ N., 124°12′38.10″ W.; Thence northwesterly along spur ridge which divides the North Fork and Main Fork of the Elk River to a prominent point at 42°43′16.33″ N., 124°12′43.61″ W.; Thence southwesterly along said ridge to a point at 42°43′04.76″ N., 124°12′59.84″ W.; Thence northwesterly to the intersection of a tributary to Bungalow Creek and the west boundary of sec. 14; Thence northerly along said section line to the northwest corner of sec. 14; Thence westerly along the south boundary of secs. 10, 9, and 8 to a point on the Grassy Knob Wilderness Boundary; Thence along the Grassy Knob Wilderness Boundary line to a point on the east-west centerline of the NE¼ of sec. 7, T. 33 S., R. 14 W.; Thence west along said east-west centerline to the point of beginning.

The areas described aggregate approximately 4,921 acres in Curry County.

2. The withdrawal made by this order does not alter the applicability of those public land laws governing the use of the National Forest System lands under lease, license, or permit, or governing the disposal of the mineral or vegetative resources other than under the mining laws.

3. This withdrawal will expire 20 years from the effective date of this order unless, as a result of a review conducted before the expiration date pursuant to Section 204(f) of the Federal Land Policy and Management Act of 1976, 43 U.S.C. 1714(f) (1988), the Secretary determines that the withdrawal shall be extended.

Dated: February 7, 1996.

Bob Armstrong,

Assistant Secretary of the Interior.

[FR Doc. 96–3259 Filed 2–13–96; 8:45 am]

BILLING CODE 4310–33–P

DEPARTMENT OF TRANSPORTATION

Coast Guard

Saint Lawrence Seaway Development Corporation

46 CFR Ch. III

46 CFR Parts 401 and 402

Organization and Delegation of Powers and Duties Great Lakes Pilotage Regulations

AGENCY: United States Coast Guard; Saint Lawrence Seaway Development Corporation, DOT.

ACTION: Final rule.

SUMMARY: The Coast Guard's responsibility for administering the Secretary's functions under the Great Lakes Pilotage Act of 1960, as amended, (the Act) was transferred from the Coast Guard to the Saint Lawrence Seaway Development Corporation (SLSDC) on December 11, 1995. This rule revises those portions of the Coast Guard's Great Lakes Pilotage Regulations and Great Lakes Pilotage Rules and Orders that are necessary for SLSDC to carry out its responsibilities under the Act. This rule is necessary to reflect the changed responsibilities.

DATES: This rule is effective on February 14, 1996.

FOR FURTHER INFORMATION CONTACT: Marc C. Owen, Chief Counsel, Saint Lawrence Seaway Development Corporation, United States Department of Transportation, 400 7th Street SW., Washington, DC 20590, room 5424, (202) 366–6823, or Pamela M. Pelcovitz, Chief, Regulations and Administrative Law Division, United States Coast Guard, United States Department of Transportation, 400 7th Street, SW., Washington, DC 20590 (202) 267–1534.

SUPPLEMENTARY INFORMATION: By final rule published in the Federal Register on December 11, 1995 (60 FR 63444), the Coast Guard's responsibility for administering the Secretary's functions under the Great Lakes Pilotage Act of 1960, as amended, (the Act) was transferred to the Saint Lawrence Seaway Development Corporation (SLSDC), effective on the date of publication. This final rule makes changes to those portions of the Coast Guard's Great Lakes Pilotage Regulations and Great Lakes Pilotage Rules and Orders that are necessary for SLSDC to carry out its responsibilities under the Act.

This rule revises the references in the Great Lakes Pilotage Regulations (46 CFR part 401) and the Great Lakes

Pilotage Rules and Orders (46 CFR part 402) from the Coast Guard to the SLSDC. It also changes the title of 46 CFR chapter III, in which parts 401 and 402 are contained, from ''COAST GUARD (GREAT LAKES PILOTAGE), DEPARTMENT OF TRANSPORTATION'' to ''SAINT LAWRENCE SEAWAY DEVELOPMENT CORPORATION (GREAT LAKES PILOTAGE), DEPARTMENT OF TRANSPORTATION.'' If any revisions are needed in the remainder of Chapter III, specifically the Great Lakes Pilotage Uniform Accounting System (46 CFR part 403) and Great Lakes Pilotage Ratemaking (46 CFR part 404), they will be made in a Great Lakes Pilotage Rate Methodology rulemaking, which will be published in the Federal Register shortly.

Since this rule relates to departmental management, organization, procedure, and practice, notice and public comment are unnecessary. For the same reason, good cause exists for not publishing this rule at least 30 days before its effective date, as is ordinarily required by 5 U.S.C. 553(d). Because the transfer of Great Lakes Pilotage responsibility has already occurred, it is necessary to reflect the redesignation in the Code of Federal Regulations immediately. Accordingly, this rule is effective on the date of its publication in the Federal Register.

46 CFR Part 401

Administration practice and procedure, Coast Guard, Great Lakes, Navigation (water).

46 CFR Part 402

Coast Guard, Great Lakes, Navigation (water).

Accordingly, 46 CFR chapter III is amended as follows:

CHAPTER III—[AMENDED]

1. The heading of chapter III is revised to read as follows:

CHAPTER III—SAINT LAWRENCE SEAWAY DEVELOPMENT CORPORATION (GREAT LAKES PILOTAGE), DEPARTMENT OF TRANSPORTATION

2. Sections 401.110 (a)(2) and (a)(9) are revised to read as follows:

§ 401.110 [Amended]

* * * * *

(a) * * *

(2) Administrator means Administrator, St. Lawrence Seaway Development Corporation, 400 Seventh St., SW., Washington, DC 20590 or 180 Andrews St., Massena, NY 13662–1763.

* * * * *

(9) Director, means Director, Great Lakes Pilotage, on the staff of the Administrator, St. Lawrence Seaway Development Corporation.

* * * * *

3. In 46 CFR parts 401 and 402, remove the word ''Commandant'' and add, in its place, the word ''Director'' in the following places:

(a) Section 401.210(a)(4);
(b) Section 401.210(a)(7);
(c) Section 401.220(b);
(d) Section 401.240(d);
(e) Section 401.320(d)(2);
(f) Section 401.320(d)(3);
(g) Section 401.510(b)(3), introductory text;
(h) Section 401.710(g); and
(i) Section 402.100.

4. In 46 CFR parts 401 and 402, remove the words ''Coast Guard'', ''United States Coast Guard'', and ''U.S. Coast Guard'' and add, in their place, the words ''Saint Lawrence Seaway Development Corporation'' in the following places:

(a) Section 401.211(e);
(b) Section 401.230(c);
(c) Section 401.230(d);
(d) Section 401.240(a);
(e) Section 401.250(c);
(f) Section 401.320(d)(4);
(g) Section 401.425;
(h) Section 401.510(b)(2);
(i) Section 401.510(b)(3);
(j) Section 401.600(a);
(k) Section 401.615(b); and
(l) Section 401.620(a).

§ 401.230 [Amended]

5. In the second sentence of 46 CFR 401.230(b) add the words ''or other official of the Saint Lawrence Seaway Development Corporation'' after the word ''Director''.

§ 401.431 [Amended]

6. In 46 CFR 401.431(e) remove the word ''Administration'' and add, in its place, the words ''Saint Lawrence Seaway Development Corporation''.

§ 401.510 [Amended]

7. In 46 CFR 401.510(b)(5) add the words ''or the Director'' after the words ''local Coast Guard unit having jurisdiction'' and ''Coast Guard officer to whom the violation was reported''.

8. In 46 CFR part 401 remove the word ''Commandant'' and add, in its place, the word ''Administrator'' in the following places:

(a) Section 401.615(b); and
(b) Section 401.650.

9. Section 401.250(d) is revised to read as follows:

§ 401.250 [Amended]

* * * * *

(d) Every U.S. Registered Pilot shall, whenever his license is revoked or suspended under the provisions of Part 5 of Title 46, deliver his Certificate of Registration to the Director. If the license is suspended, the Certificate of Registration will be held and returned to the holder upon expiration of the suspension period.

Issued at Washington, DC, this 7th day of February 1996.

A.E. Henn,

Vice Admiral, U.S. Coast Guard, Acting Commandant.

Gail C. McDonald,

Administrator, Saint Lawrence Seaway Development Corporation.

[FR Doc. 96–3253 Filed 2–13–96; 8:45 am]

BILLING CODE 4910–14–M

FEDERAL COMMUNICATIONS COMMISSION

47 CFR Part 73

[MM Docket No. 95–148; RM–8693]

Radio Broadcasting Services; Big Sky, MT

AGENCY: Federal Communications Commission.

ACTION: Final rule.

SUMMARY: This document allots Channel 283A to Big Sky, Montana, in response to a petition filed by George Russell & Associates, Inc. *See* 60 FR 49242, September 22, 1995. Channel 283A can be allotted to Big Sky without a site restriction at coordinates 45–16–03 and 111–18–04. With this action, this proceeding is terminated.

DATES: Effective March 25, 1996. The window period for filing applications will open on March 25, 1996, and close on April 25, 1996.

FOR FURTHER INFORMATION CONTACT: Kathleen Scheuerle, Mass Media Bureau, (202) 418–2180.

SUPPLEMENTARY INFORMATION: This is a summary of the Commission's *Report and Order,* MM Docket No. 95–148, adopted January 26, 1996, and released February 7, 1996. The full text of this Commission decision is available for inspection and copying during normal business hours in the Commission's Reference Center (Room 239), 1919 M Street, NW., Washington, DC. The complete text of this decision may also be purchased from the Commission's copy contractors, International Transcription Services, Inc., 2100 M Street, NW., Suite 140, Washington, DC 20037, (202) 857–3800.

List of Subjects in 47 CFR Part 73

Radio broadcasting.

Part 73 of title 47 of the Code of Federal Regulations is amended as follows:

PART 73—[AMENDED]

1. The authority citation for part 73 continues to read as follows:

Authority: Secs. 303, 48 Stat., as amended, 1082; 47 U.S.C. 154, as amended.

§ 73.202 [Amended]

2. Section 73.202(b), the Table of FM Allotments under Montana, is amended by adding Big Sky, Channel 283A.

Federal Communications Commission.

John A. Karousos,

Chief, Allocations Branch, Policy and Rules Division, Mass Media Bureau.

[FR Doc. 96–3210 Filed 2–13–96; 8:45 am]

BILLING CODE 6712–01–F

---

47 CFR Part 73

[MM Docket No. 93–169; RM–8246]

Radio Broadcasting Services; Walterboro and Ridgeville, SC

AGENCY: Federal Communications Commission.

ACTION: Final rule.

SUMMARY: The Commission, at the request of Gresham Communications, Inc., reallots Channel 265C3 from Walterboro to Ridgeville, South Carolina, and modifies Station WPAL-FM's construction permit accordingly. *See* 58 FR 34556, June 28, 1993. Channel 265C3 can be reallotted to Ridgeville in compliance with the Commission's minimum distance separation requirements with a site restriction of 2.7 kilometers (1.7 miles) west at petitioner's requested site. The coordinates for Channel 265C3 at Ridgeville are North Latitude 33–06–00 and West Longitude 80–20–30. With this action, this proceeding is terminated.

EFFECTIVE DATE: March 25, 1996.

FOR FURTHER INFORMATION CONTACT: Sharon P. McDonald, Mass Media Bureau, (202) 418–2180.

SUPPLEMENTARY INFORMATION: This is a synopsis of the Commission's *Report and Order,* MM Docket No. 93–169, adopted January 24, 1996, and released February 7, 1996. The full text of this Commission decision is available for inspection and copying during normal business hours in the FCC Reference Center (Room 239), 1919 M Street, NW., Washington, DC. The complete text of this decision may also be purchased from the Commission's copy contractors, International Transcription Service, Inc., (202) 857–3800, 2100 M Street, NW., Suite 140, Washington, DC 20037.

List of Subjects in 47 CFR Part 73

Radio broadcasting.

Part 73 of title 47 of the Code of Federal Regulations is amended as follows:

PART 73—[AMENDED]

1. The authority citation for part 73 continues to read as follows:

Authority: Sections 303, 48 Stat., as amended, 1082; 47 U.S.C. 154, as amended.

§ 73.202 [Amended]

2. Section 73.202(b), the Table of FM Allotments under South Carolina, is amended by removing Channel 265C3 at Walterboro and adding Ridgeville, Channel 265C3.

Federal Communications Commission.

John A. Karousos,

Chief, Allocations Branch, Policy and Rules Division, Mass Media Bureau.

[FR Doc. 96–3211 Filed 2–13–96; 8:45 am]

BILLING CODE 6712–01–F

DEPARTMENT OF TRANSPORTATION

Research and Special Programs Administration

49 CFR Part 199

[Docket No. PS–102, Notice No.1]

Control of Drug Use and Alcohol Misuse in Natural Gas, Liquefied Natural Gas, and Hazardous Liquid Pipeline Operations Alcohol Misuse Prevention Program

AGENCY: Research and Special Programs Administration, DOT.

ACTION: Availability of guidelines and interpretations.

SUMMARY: This notice provides information on how to obtain copies of guidance and interpretation documents RSPA has issued to assist operators in complying with part 199.

ADDRESSES: Copies of the documents referenced in this notice may be obtained by writing or telephoning the Transportation Safety Institute, Research and Special Programs Administration, DTI–60, 6500 South MacArthur Boulevard, Oklahoma City, OK 73169; (405) 954–4643.

FOR FURTHER INFORMATION CONTACT: Ms. Catrina Pavlik, Drug/Alcohol Program Analyst, Office of Pipeline Safety, Research and Special Programs Administration, Department of Transportation, Room 2335, 400 Seventh Street, SW., Washington, DC 20590–0001; (202) 366–6199.

TEXT SUPPLEMENTARY INFORMATION: On November 21, 1988, RSPA published a final rule (53 FR 47084) entitled ''Control of Drug Use in Natural Gas, Liquefied Natural Gas, and Hazardous Liquid Pipeline Operations.'' On February 15, 1994, RSPA published a final rule (59 FR 7430) entitled ''Alcohol Misuse Prevention Program.'' The rules require pipeline operators to have an anti-drug program and alcohol misuse prevention program. The anti-drug program includes pre-employment, post-accident, random, and reasonable cause drug testing, and an Employee Assistance Program (EAP) for education and training regarding the effects and consequences of drug use. The alcohol misuse prevention program includes post-accident, reasonable suspicion alcohol testing, and the provision of resources for evaluating, resolving problems, and education associated with the misuse of alcohol.

Since publication of the November 1988 and February 1994 final rules, RSPA has received numerous requests for interpretations of 49 CFR part 199 subpart A and subpart B. In September 1989, RSPA issued ''Guidelines for Implementing an Anti-Drug Program For Pipeline Personnel'' (correction issued June 13, 1990), and in April 1990, issued ''Additional Guidelines For Implementing An Anti-Drug Program For Pipeline Personnel.'' In September 1994, RSPA issued ''Implementation Guidelines for the Alcohol Misuse Prevention Program in the Pipeline Industry.'' Also in April 1990, a compilation of questions and answers was issued entitled, ''Most Frequently Asked Questions Concerning the Implementation of 49 CFR 199'' (''Questions''). Although these documents have been widely distributed, RSPA believes it is important to publish a notice in the Federal Register of their availability from the Office of Pipeline Safety at the address noted above under **ADDRESSES**.

Issued in Washington, DC on February 9, 1996.

Richard B. Felder,

Associate Administrator, Office of Pipeline Safety.

[FR Doc. 96–3305 Filed 2–13–96; 8:45 am]

BILLING CODE 4910–60–P

Proposed Rules

Federal Register
Vol. 61, No. 31
Wednesday, February 14, 1996

This section of the FEDERAL REGISTER contains notices to the public of the proposed issuance of rules and regulations. The purpose of these notices is to give interested persons an opportunity to participate in the rule making prior to the adoption of the final rules.

ARCHITECTURAL AND TRANSPORTATION BARRIERS COMPLIANCE BOARD

36 CFR Parts 1190 and 1191

Accessibility Guidelines for Play Facilities

AGENCY: Architectural and Transportation Barriers Compliance Board.

ACTION: Establishment of regulatory negotiation committee and first committee meeting.

SUMMARY: The Architectural and Transportation Barriers Compliance Board (Access Board) has decided to establish a regulatory negotiation committee to develop a proposed rule on accessibility guidelines for newly constructed and altered play facilities covered by the Americans with Disabilities Act and the Architectural Barriers Act. The regulatory negotiation committee will be composed of organizations who represent the interests affected by the accessibility guidelines for play facilities. This document also announces the times and location of the first meeting of the regulatory negotiation committee.

DATES: The first meeting of the regulatory negotiation committee is scheduled for March 5, 6 and 7, 1996, beginning at 9:00 a.m. each day. The meeting will end at 4:30 p.m. on March 5 and 6, 1996 and at 2:00 p.m. on March 7, 1996.

ADDRESSES: The first meeting of the regulatory negotiation committee will be held at the Embassy Suites, 1250 22nd Street NW., Washington, DC.

FOR FURTHER INFORMATION CONTACT: Peggy Greenwell, Office of Technical and Information Services, Architectural and Transportation Barriers Compliance Board, 1331 F Street, NW., suite 1000, Washington, DC. 20004–1111. Telephone number (202) 272–5434 extension 34 (Voice); (202) 272–5449 (TTY). This document is available in alternate formats (cassette tape, braille, large print, or computer disc) upon request.

SUPPLEMENTARY INFORMATION: On December 22, 1995, the Architectural and Transportation Barriers Compliance Board (Access Board) published a notice of intent to establish a regulatory negotiation committee to develop a proposed rule on accessibility guidelines for newly constructed and altered play facilities covered by the Americans with Disabilities Act and the Architectural Barriers Act. 60 FR 66538 (December 22, 1995). The notice identified the interests that are likely to be significantly affected by the accessibility guidelines: manufacturers and designers of play facilities; State and local governments; schools, parks, and day care centers; individuals with disabilities; voluntary standard groups; and the Federal government. The notice proposed a list of 17 organizations to represent these interests on the regulatory negotiation committee. Comments were requested on the proposal to establish the regulatory negotiation committee and the proposed committee membership.

Eighteen comments were received in response to the notice. All the commenters supported the establishment of the regulatory negotiation committee. The comments identified two additional interests that are likely to be significantly affected by the accessibility guidelines: parents and playground surface manufacturers. The National Parent-Teacher Association and the ASTM [1] Playground Surfaces Task Group (F8.52.01) will be added as members to the regulatory negotiation committee to represent these interests.

The following 19 organizations will comprise the regulatory negotiation committee:

Access Board
ASTM [1] Playground Surfaces Task Group (F8.52.01)
ASTM [1] Public Playground Committee (F15.29)
ASTM [1] Soft Contained Play Committee (F15.36)
American Society of Landscape Architects
The Council for Exceptional Children
International City/County Management Association
National Association of Counties
National Association of Elementary School Principals
National Child Care Association
National Council on Independent Living
National Easter Seal Society
National League of Cities
National Parent-Teacher Association
National Recreation and Park Association
Playground Equipment Manufacturers Association
Spina Bifida Association of America
TASH [2]
United Cerebral Palsy Association

Several commenters indicated that they wanted to present information to the regulatory negotiation committee on playground surfaces, soft contained play facilities, and other topics. The Access Board agrees that making such information available to the regulatory negotiation committee will greatly assist its work and will recommend that the committee hold informational meetings where organizations and individuals can present information to the committee.

The first meeting of the regulatory negotiation committee will be held in Washington, DC on March 5, 6 and 7, 1996. The times and location of the meeting are listed at the beginning of this notice. The meeting is open to the public. The meeting site is accessible to individuals with disabilities. Individuals with hearing impairments who require sign language interpreters should contact Peggy Greenwell by February 26, 1996, by calling (202) 272–5434 extension 34 (voice) or (202) 272–5449 (TTY).

Issued on February 8, 1996.

John H. Catlin,

Chairman, Architectural and Transportation Barriers Compliance Board.

[FR Doc. 96–3315 Filed 2–13–96; 8:45 am]

BILLING CODE 8150–01–P

[1] American Society for Testing and Materials.

[2] The Association for Persons with Severe Handicaps

ENVIRONMENTAL PROTECTION AGENCY

40 CFR Part 52

[NC–049–1–7197b; FRL–5336–7]

Approval and Promulgation of Implementation Plans North Carolina: Approval of Revisions to the North Carolina State Implementation Plan

AGENCY: Environmental Protection Agency (EPA).

ACTION: Proposed rule.

SUMMARY: On May 15, 1991, the State of North Carolina, through the North Carolina Department of Environment, Health and Natural Resources, submitted revisions to the North Carolina State Implementation Plan (SIP) to EPA. These revisions include the correcting of an address; the limiting of emissions of particulates from fuel burning indirect heat exchangers; the elimination of a conflicting statement on updating referenced regulations; the addition of compounds whose emissions will not be considered in nonattainment areas; the changing of the allowable emission limits for several boilers; and the clarification of the permit requirements for replacement of existing equipment; and for sources subject to PSD requirements. In the final rules section of this Federal Register, the EPA is approving the State's SIP revision as a direct final rule without prior proposal because the EPA views this as a noncontroversial revision amendment and anticipates no adverse comments. A detailed rationale for the approval is set forth in the direct final rule. If no adverse comments are received in response to that direct final rule, no further activity is contemplated in relation to this proposed rule. If EPA receives adverse comments, the direct final rule will be withdrawn and all public comments received will be addressed in a subsequent final based on this proposed rule. The EPA will not institute a second comment period on this document. Any parties interested in commenting on this document should do so at this time.

DATES: To be considered, comments must be received by March 15, 1996.

ADDRESSES: Written comments on this action should be addressed to Mr. Randy Terry at the EPA Regional Office listed below.

Copies of the documents relative to this action are available for public inspection during normal business hours at the following locations. The interested persons wanting to examine these documents should make an appointment with the appropriate office at least 24 hours before the visiting day.

Air and Radiation Docket and Information Center (Air Docket 6102), U.S. Environmental Protection Agency, 443, 401 M Street SW., Washington DC 20460.

Environmental Protection Agency, Region 4 Air Programs Branch, 345 Courtland Street NE., Atlanta, Georgia 30365.

North Carolina Department of Environment, Health and Natural Resources, 512 North Salisbury Street, Raleigh, North Carolina 27604.

FOR FURTHER INFORMATION CONTACT: Mr. Randy Terry, Regulatory Planning and Development Section, Air Programs Branch, Air, Pesticides, and Toxics Management Division, Region 4 Environmental Protection Agency, 345 Courtland Street, Atlanta, Georgia 30365. The telephone number is 404/347–3555, ext. 4212.

SUPPLEMENTARY INFORMATION: For additional information see the direct final rule which is published in the rules section of this Federal Register.

Dated: November 6, 1995.

Patrick M. Tobin,

Acting Regional Administrator.

[FR Doc. 96–3327 Filed 2–13–96; 8:45 am]

BILLING CODE 6560–50–P

---

40 CFR Part 52

[ME–20–01–6906b; A–1–FRL–5339–5]

Approval and Promulgation of Air Quality Implementation Plans; Maine; NSR Revisions

AGENCY: Environmental Protection Agency (EPA).

ACTION: Proposed rule.

SUMMARY: EPA is proposing to approve a State Implementation Plan (SIP) revision submitted by the State of Maine. This revision establishes and requires the implementation of the Clean Air Act Amendments (CAAA) of 1990 with regard to New Source Review (NSR) in areas that have not attained the National Ambient Air Quality Standards (NAAQS). In addition, the revision contains minor changes to Maine's Prevention of Significant Deterioration program. In the Final Rules Section of this Federal Register, EPA is approving the State's SIP revision as a direct final rule without prior proposal because the Agency views this as a noncontroversial revision amendment and anticipates no adverse comments. A detailed rationale for the approval is set forth in the direct final rule. If no adverse comments are received in response to that direct final rule, no further activity is contemplated in relation to this proposed rule. If EPA receives adverse comments, the direct final rule will be withdrawn and all public comments received will be addressed in a subsequent final rule based on this action serving as a proposed rule. EPA will not institute a second comment period on this document. Any parties interested in commenting on this notice should do so at this time.

DATES: Comments must be received on or before March 15, 1996.

ADDRESSES: Comments may be mailed to Susan Studlien, Acting Director, Air, Pesticides and Toxics Management Division, U.S. Environmental Protection Agency, Region I, JFK Federal Bldg., Boston, MA 02203. Copies of the State submittal and EPA's technical support document are available for public inspection during normal business hours, by appointment at the Air, Pesticides and Toxics Management Division, U.S. Environmental Protection Agency, Region I, One Congress Street, 10th floor, Boston, MA and the Department of Environmental Protection, 71 Hospital Street, Augusta, ME 04333.

FOR FURTHER INFORMATION CONTACT: Brendan McCahill, (617) 565–3262.

SUPPLEMENTARY INFORMATION: For additional information, see the direct final rule which is located in the Rules Section of this Federal Register.

Authority: 42 U.S.C. 7401–7671q.

Dated: September 25, 1996.

John P. DeVillars,

Regional Administrator, Region I.

[FR Doc. 96–3236 Filed 2–13–96; 8:45 am]

BILLING CODE 6560–50–P

---

40 CFR Part 52

[MI40–01–6998b; FRL–5418–7]

Approval and Promulgation of Implementation Plan; Michigan

AGENCY: United States Environmental Protection Agency (USEPA).

ACTION: Proposed rule.

SUMMARY: The USEPA proposes to approve a revision to the Michigan State Implementation Plan (SIP) to meet the requirements of the USEPA transportation conformity rule. The transportation conformity SIP revisions enable the State of Michigan to implement and enforce the Federal transportation conformity requirements at the State or local level in accordance with 40 CFR part 51, subpart T—Conformity to State or Federal Implementation Plans of Transportation Plans, Programs, and Projects Developed, Funded or Approved Under Title 23 U.S.C. or the Federal Transit Act.

DATES: Comments on this proposed action must be received by March 15, 1996.

ADDRESSES: Written comments should be sent to: Carlton T. Nash, Chief, Regulation Development section, Air Toxics and Radiation Branch (AT–18J),

USEPA, Region 5, 77 West Jackson Boulevard, Chicago, Illinois 60604–3590.

SUPPLEMENTARY INFORMATION: For additional information, see the Direct Final rule which is located in the Rules section of this Federal Register. Copies of the request and the EPA's analysis are available for inspection at the following address: USEPA, Region 5, Air and Radiation Division, 77 West Jackson Boulevard, Chicago, Illinois 60604–3590. (Please telephone Michael G. Leslie at (312) 353–6680 before visiting the Region 5 office.)

Authority: 42 U.S.C. 7401–7671q.

Dated: January 23, 1996.

Valdas V. Adamkus,

Regional Administrator.

[FR Doc. 96–3329 Filed 2–13–96; 8:45 am]

BILLING CODE 6560–50–P

---

40 CFR Part 52

[MA42–1–7174b; A–1–FRL–5329–6]

Approval and Promulgation of Air Quality Implementation Plans; Massachusetts; Automotive Refinishing

AGENCY: Environmental Protection Agency (EPA).

ACTION: Proposed rule.

SUMMARY: EPA is proposing to approve a State Implementation Plan (SIP) revision submitted by the Commonwealth of Massachusetts. This revision establishes and requires VOC emission standards for automotive refinishing coatings. In the Final Rules Section of this Federal Register, EPA is approving the State's SIP revision as a direct final rule without prior proposal because the Agency views this as a noncontroversial revision amendment and anticipates no adverse comments. A detailed rationale for the approval is set forth in the direct final rule. If no adverse comments are received in response to that direct final rule, no further activity is contemplated in relation to this proposed rule.

If EPA receives adverse comments, the direct final rule will be withdrawn and all public comments received will be addressed in a subsequent final rule based on this proposed rule. EPA will not institute a second comment period on this proposal. Any parties interested in commenting on this proposal should do so at this time.

DATES: Comments must be received on or before March 15, 1996.

ADDRESSES: Comments may be mailed to Susan Studlien, Deputy Director, Office of Ecosystems Protection, U.S. Environmental Protection Agency, Region I, JFK Federal Bldg., Boston, MA 02203. Copies of the State submittal and EPA's technical support document are available for public inspection during normal business hours, by appointment at the Office of Ecosystems Protection, U.S. Environmental Protection Agency, Region I, One Congress Street, 10th floor, Boston, MA and the Division of Air Quality Control, Department of Environmental Protection, One Winter Street, 8th Floor, Boston, MA 02108.

FOR FURTHER INFORMATION CONTACT: Jeanne Cosgrove , (617) 565–3246.

SUPPLEMENTARY INFORMATION: For additional information, see the direct final rule which is located in the Rules Section of this Federal Register.

Authority: 42 U.S.C. 7401–7671q.

Dated: October 6, 1995.

John P. DeVillars,

Regional Administrator, EPA New England.

[FR Doc. 96–3238 Filed 2–13–96; 8:45 am]

BILLING CODE 6560–50–P

---

40 CFR Part 52

[NE–9–1–7220b; FRL–5409–8]

Approval and Promulgation of Implementation Plans and Delegation of 112(l) Authority; Lincoln-Lancaster County Health Department and City of Omaha (Nebraska)

AGENCY: Environmental Protection Agency (EPA).

ACTION: Proposed rule.

SUMMARY: The EPA proposes to approve the State Implementation Plan (SIP) revision submitted by the state of Nebraska on behalf of the two local air pollution control agencies. The state has an approved program (published in the Federal Register on January 4, 1995), and the local agencies have adopted the state's regulatory framework. The state has made this request so that the local agencies may issue Federally enforceable Class II permits as an alternative to Title V.

Like the state's program, this SIP revision includes the creation of a Class II operating permit program and adopts the state's Part D (nonattainment) new source review rule changes, SO_2 rule corrections, and provisions for compliance and enforcement information. In the final rules section of the Federal Register, the EPA is approving this revision as a direct final rule without prior proposal because the Agency views this as a noncontroversial revision amendment and anticipates no adverse comments. A detailed rationale for the approval is set forth in the direct final rule.

If no adverse comments are received in response to this proposed rule, no further activity is contemplated in relation to this rule. If the EPA receives adverse comments, the direct final rule will be withdrawn, and all public comments received will be addressed in a subsequent final rule based on this proposed rule. The EPA will not institute a second comment period on this document. Any parties interested in commenting on this document should do so at this time.

DATES: Comments on this proposed rule must be received in writing by March 15, 1996.

ADDRESSES: Comments may be mailed to Christopher D. Hess, Environmental Protection Agency, Air Branch, 726 Minnesota Avenue, Kansas City, Kansas 66101.

FOR FURTHER INFORMATION CONTACT: Christopher D. Hess at (913) 551–7213.

SUPPLEMENTARY INFORMATION: See the information provided in the direct final rule which is located in the rules section of the Federal Register.

Dated: December 7, 1995.

William Rice,

Acting Regional Administrator.

[FR Doc. 96–3234 Filed 2–13–96; 8:45 am]

BILLING CODE 6560–50–P

---

40 CFR Part 52

[CA 95–9–7273b; FRL–5411–2]

Approval and Promulgation of State Implementation Plans; California State Implementation Plan Revision, San Diego County Air Pollution Control District

AGENCY: Environmental Protection Agency (EPA).

ACTION: Proposed rule.

SUMMARY: EPA is proposing a limited approval and limited disapproval of revisions to the California State Implementation Plan (SIP) which concern the control of volatile organic compound (VOC) emissions from kelp processing and bio-polymer manufacturing operations.

The intended effect of proposing limited approval and limited disapproval of this rule is to regulate emissions of VOCs in accordance with the requirements of the Clean Air Act, as amended in 1990 (CAA or the Act). In the Final Rules Section of this Federal Register, the EPA is finalizing a simultaneous limited approval and limited disapproval of the state's SIP

revision as a direct final rule without prior proposal because the Agency views this as a noncontroversial action and anticipates no adverse comments. A detailed rationale for this limited approval and limited disapproval is set forth in the direct final rule. If no adverse comments are received in response to this proposed rule, no further activity is contemplated in relation to this rule. If EPA receives adverse comments, the direct final rule will be withdrawn and all public comments received will be addressed in a subsequent final rule based on this proposed rule. The EPA will not institute a second comment period on this document. Any parties interested in commenting on this action should do so at this time.

DATES: Comments on this proposed rule must be received in writing by March 15, 1996.

ADDRESSES: Written comments on this action should be addressed to: Daniel A. Meer, Rulemaking Section (A–5–3), Air and Toxics Division, U.S. Environmental Protection Agency, Region IX, 75 Hawthorne Street, San Francisco, CA 94105–3901.

Copies of the rule and EPA's evaluation report of the rule are available for public inspection at EPA's Region IX office during normal business hours. Copies of the submitted rule are also available for inspection at the following locations:

San Diego County Air Pollution Control District, 9150 Chesapeake Drive, San Diego, CA 92123–1096

California Air Resources Board, Stationary Source Division, Rule Evaluation Section, 2020 ''L'' Street, Sacramento, CA 95814.

FOR FURTHER INFORMATION CONTACT: Patricia A. Bowlin, Rulemaking Section (A–5–3), Air and Toxics Division, U.S. Environmental Protection Agency, Region IX, 75 Hawthorne Street, San Francisco, CA 94105–3901, Telephone: (415) 744–1188.

SUPPLEMENTARY INFORMATION: This document concerns San Diego County Air Pollution Control District Rule 67.10, Kelp Processing and Bio-Polymer Manufacturing Operations, submitted to EPA on July 13, 1994 by the California Air Resources Board. For further information, please see the information provided in the Direct Final action which is located in the Final Rules Section of this Federal Register.

Authority: 42 U.S.C. 7401–7671q.

Dated: January 16, 1996.

Felicia Marcus,

Regional Administrator.

[FR Doc. 96–3232 Filed 2–13–96; 8:45 am]

BILLING CODE 6560–50–W

40 CFR Part 180

[PP–9F3798/P642; FRL–5349–1]

RIN 2070–AC18

Lactofen; Pesticide Tolerance

AGENCY: Environmental Protection Agency (EPA).

ACTION: Proposed rule.

SUMMARY: This document proposes to renew a time-limited tolerance for residues of the herbicide lactofen, 1-(carboethoxy)ethyl-5-[2-chloro-4-(trifluoromethyl)phenoxy]-2-nitrobenzoate, and its metabolites containing the diphenyl ether linkage on the raw agricultural commodity (RAC) cottonseed at 0.05 part per million (ppm). The tolerance would establish the maximum permissible level of residues of the herbicide in or on this RAC. The Valent USA Corp. requested this tolerance pursuant to the Federal Food, Drug, and Cosmetic Act (FFDCA). The time-limited tolerance would expire on December 31, 1996.

DATES: Comments identified by the docket number, [PP 9F3798/P642], must be received on or before March 15, 1996.

ADDRESSES: Submit written comments by mail to: Public Response and Program Resources Branch, Field Operations Division (7506C), Office of Pesticide Programs, Environmental Protection Agency, 401 M St., SW., Washington, DC. In person, bring comments to: Public Docket, Rm. 1132, Crystal Mall #2, 1921 Jefferson Davis Highway, Arlington, VA.

Information submitted as a comment concerning this document may be claimed confidential by marking any part or all of that information as ''Confidential Business Information'' (CBI). Information so marked will not be disclosed except in accordance with procedures as set forth in 40 CFR part 2. A copy of the comment that does not contain CBI must be submitted for inclusion in the public record. Information not marked confidential will be included in the public docket by EPA without prior notice. The public docket is available for public inspection in Rm. 1132 at the above address, from 8 a.m. to 4:30 p.m., Monday through Friday, excluding legal holidays.

Comments and data may also be submitted electronically by sending electronic mail (e-mail) to: opp-docket@epamail.epa.gov. Electronic comments must be submitted as an ASCII file avoiding the use of special characters and any form of encryption. Comments and data will also be accepted on disks in WordPerfect in 5.1 file format or ASCII file format. All comments and data in electronic form must be identified by the docket number, [PP 9F3798/P642]. No CBI should be submitted through e-mail. Electronic comments on this proposed rule may be filed online at many Federal Depository Libraries. Additional information on electronic submissions can be found in the SUPPLEMENTARY INFORMATION unit of this document.

FOR FURTHER INFORMATION CONTACT: By mail: Joanne I. Miller, Product Manager (PM 23), Registration Division (7505C), Office of Pesticide Programs, Environmental Protection Agency, 401 M St., SW., Washington, DC 20460. Office location, telephone number, and e-mail address: Rm. 237, CM #2, 1921 Jefferson Davis Highway, Arlington, VA, (703)-305-6224; e-mail: miller.joanne@epamail.epa.gov.

SUPPLEMENTARY INFORMATION: In the Federal Register of June 14, 1990 (55 FR 24084), EPA established a time-limited tolerance under section 408 of the Federal Food, Drug, and Cosmetic Act (21 U.S.C. 346a) for residues of the herbicide lactofen, 1-(carboethoxy)ethyl-5-[2-chloro-4-(trifluoromethyl)phenoxy]-2-nitrobenzoate, and its associated metabolites containing the diphenyl ether linkage in or on the raw agricultural commodity (RAC) cottonseed at 0.05 ppm. This tolerance was requested by Valent U.S.A. Corp., 1333 North California Blvd., P.O. Box 8025, Walnut Creek, CA 94596-805, and establishes the maximum permissible level for residues of the herbicide in or on this RAC.

The tolerance was issued as a time-limited tolerance because EPA required animal metabolism studies and additional information on the cottonseed processing study. EPA's review of the processing study resulted in a preliminary determination that concentration does not occur in processed food, but additional information on the study was required to confirm that determination. Information was submitted and the determination was confirmed. The animal metabolism studies were required to determine the likelihood of secondary residues in meat, fat, milk, poultry, and eggs.

The animal metabolism studies were received at the Agency in September 1992 and placed into review. The Agency completed an evaluation of the animal metabolism studies in March 1993, and concluded that the nature of the residue in animals was tentatively adequately understood. For the purposes of this tolerance with an expiration date, the Agency determined

that finite residues in animal commodities would be minimal from the use of lactofen on cotton, based on results of metabolism studies. However, for the proposed permanent tolerance, additional information was required.

This included the following: (1) Further characterization of metabolites from animal metabolism studies; (2) a ruminant feeding study; (3) independent Method Evaluation and EPA Method Validation of the proposed analytical methodology if tolerances on animal commodities are required; (4) an Independent Method Validation and EPA Method Validation of revised analytical methodology for cottonseed; and (5) revised product labeling. The ruminant feeding study, Independent Method Validation of the revised analytical methodology for cottonseed and other information were received at the Agency in September 1993 and January 1994, and placed in review. The Agency completed an evaluation of this information in May 1995, and concluded that the nature of the residue in animals is adequately understood, pending receipt of additional information on the ruminant feeding study. However, Agency review identified the following additional deficiencies: (1) Based on the results of the ruminant feeding study, a tolerance of 0.02 ppm is required for the lactofen metabolite PPG-2838 in or on ruminant meat byproducts, as well as an Independent Method Validation and EPA Method Validation of the proposed analytical methodology for this metabolite in or on meat byproducts; (2) revised analytical methodology for cottonseed and a revised Section F proposing to raise the tolerance for cottonseed to 0.25 ppm are required; (3) residue data for cotton gin byproducts are required as a result of recent revisions to the Residue Chemistry Guidelines (Subdivision O of the Pesticide Assessment Guidelines). On December 7, 1995, Valent submitted a response to these deficiencies, excluding the newly required residue data for cotton gin byproducts.

The company's response has been placed in review. Since Agency review has not been completed, it is inappropriate to establish a permanent tolerance at this time. Nevertheless, the Agency believes that the existing data support an extension of the time-limited tolerance to December 31, 1996. The data considered in support of the time-limited tolerance are identified in the Federal Register of June 14, 1990 (55 FR 24084).

There are no pending regulatory actions against the registration of this pesticide. The pesticide is considered useful for the purposes for which it is sought.

Adequate analytical methodology (gas chromatography) is available for enforcement purposes. Prior to its publication in the *Pesticide Analytical Manual, Vol. II*, the enforcement methodology is being made available in the interim to anyone who is interested in pesticide residue enforcement when requested from: By mail, Calvin Furlow, Public Response and Program Resource Branch, Field Operations Division (7506C), Office of Pesticide Programs, Environmental Protection Agency, 401 M St., SW., Washington, DC 20460. Office location and telephone number: Crystal Mall #2, Rm. 1132, 1921 Jefferson Davis Highway, Arlington, VA, (703)-305-5805.

Based on the information and data considered, the Agency concludes that the proposed tolerance will protect the public health. Therefore, it is proposed that the tolerance be continued as set forth below.

Any person who has registered or submitted an application for registration of a pesticide under the Federal Insecticide, Fungicide, and Rodenticide Act (FIFRA) as amended, which contains the ingredient listed herein, may request within 30 days after the publication of this document in the Federal Register that this proposal be referred to an Advisory Committee in accordance with section 408(e) of the Federal Food, Drug, and Cosmetic Act (FFDCA).

Interested persons are invited to submit written comments on the proposed regulation. Comments must bear a notation indicating the docket control number, [PP 9F3798/P642). All written comments filed in response to this petition will be available in the Public Response and Program Resources Branch at the above address from 8 a.m. to 4:30 p.m., Monday through Friday, except legal holidays.

A record has been established for this proposal under docket number (PP 9F3798/P642) (including comments and data submitted electronically as described below). A public version of this record, including printed, paper versions of electronic comments, which does not include any information claimed as CBI, is available for inspection from 8 a.m. to 4:30 p.m., Monday through Friday, excluding legal holidays. The public record is located in Room 1132 of the Public Response and Program Resources Branch, Field Operations Division (7506C), Office of Pesticide Programs, Environmental Protection Agency, Crystal Mall #2, 1921 Jefferson Davis Highway, Arlington, VA.

Electronic comments can be sent directly to EPA at:

opp-docket@epamail.epa.gov

Electronic comments must be submitted as an ASCII file avoiding the use of special characters and any form of encryption.

The official record for this proposal, as well as the public version, as described above will be kept in paper form. Accordingly, EPA will transfer all comments received electronically into printed, paper form as they are received and will place the paper copies in the official rulemaking record which will also include all comments submitted directly in writing. The official rulemaking record is the paper record maintained at the address in ''ADDRESSES'' at the beginning of this document.

Under Executive Order 12866 (58 FR 51735, October 4, 1993), the Agency must determine whether the regulatory action is ''significant'' and therefore subject to all the requirements of the Executive Order (i.e., Regulatory Impact Analysis, review by the Office of Management and Budget (OMB)). Under section 3(f), the order defines ''significant'' as those actions likely to lead to a rule: (1) Having an annual effect on the economy of $100 million or more, or adversely and materially affecting a sector of the economy, productivity, competition, jobs, the environment, public health or safety, or State, local or tribal governments or communities (also known as ''economically significant''); (2) creating serious inconsistency or otherwise interfering with an action taken or planned by another agency; (3) materially altering the budgetary impacts of entitlement, grants, user fees, or loan programs or the rights and obligations of recipients thereof; or (4) raising novel legal or policy issues arising out of legal mandates, the President's priorities, or the principles set forth in this Executive Order.

Pursuant to the terms of this executive order, EPA has determined that this rule is not ''significant'' and is therefore not subject to OMB review.

Pursuant to the requirements of the Regulatory Flexibility Act (Pub. L. 96-354, 94 Stat. 1164, 5 U.S.C. 601-612), the Administrator has determined that regulations establishing new tolerances or raising tolerance levels or establishing exemptions from tolerance requirements do not have a significant economic impact on a substantial number of small entities. A certification statement to this effect was published in the Federal Register of May 4, 1981 (46 FR 24950).

List of Subjects in 40 CFR Part 180

Environmental protection, Administrative practice and procedure, Agricultural commodities, Pesticides and pests, Reporting and recordkeeping requirements.

Dated: February 6, 1996.

Stephen L. Johnson,

Director, Registration Division, Office of Pesticide Programs.

Therefore, it is proposed that 40 CFR part 180 be amended as follows:

PART 180—[AMENDED]

1. The authority citation for part 180 continues to read as follows:

Authority: 21 U.S.C. 346a and 371.

2. Section 180.432, paragraph (b) is revised as follows:

§180.432 Lactofen; tolerances for residues.

* * * * *

(b) A time-limited tolerance, that expired December 31, 1995, is renewed for 1 year and will now expire December 31, 1996, for residues of the herbicide lactofen, 1-(carboethoxy)ethyl-5-[2-chloro-4-(trifluoromethyl)phenoxy]-2-nitrobenzoate, and its metabolites containing the diphenyl ether linkage in or on the following raw agricultural commodity:

Commodity	Parts per million	Expiration date
Cottonseed	0.05	December 31, 1996

[FR Doc. 96–3020 Filed 2–13–96; 8:45 am]

BILLING CODE 6560–50–F

40 CFR Part 180

[OPP–300412; FRL–4995–3]

RIN 2070–AC18

Oxo-Alkyl Acetates; Tolerance Exemption

AGENCY: Environmental Protection Agency (EPA).

ACTION: Proposed rule.

SUMMARY: This document proposes that residues of a group of chemicals known as oxo-alkyl acetates [oxo-hexylacetate (CAS Reg. No. 88230-35-7), oxo-heptyl acetate (CAS Reg. No. 90438-79-2), oxo-octyl acetate (CAS Reg. No. 108419-32-5), oxo-nonyl acetate (CAS Reg. No.108419-34-7), oxo-decyl acetate (CAS Reg. No. 108419-33-6), and oxo-tridecyl acetate (CAS Reg. No. 108419-35-8)] be exempted from the requirement of a tolerance when used as a solvent in pesticide formulations. This proposed regulation was requested by Exxon Chemical Co., Performance Products Group.

DATES: Comments, identified by the docket control number [OPP–300412], must be received on or before March 15, 1996.

ADDRESSES: By mail, submit written comments to: Public Response and Program Resources Branch, Field Operations Division (7506C), Office of Pesticide Programs, Environmental Protection Agency, 401 M St., SW., Washington, D.C. 20460. In person deliver comments to: Rm. 1132, Crystal Mall Building #2, 1921 Jefferson Davis Highway, Arlington, VA.

Information submitted as a comment concerning this document may be claimed confidential by marking any part of all of that information as ''Confidential Business Information'' (CBI). Information so marked will not be disclosed except in accordance with procedures set forth in 40 CFR part 2. A copy of the comment that does not contain CBI must be submitted for inclusion in the public record. Information not marked confidential will be included in the public docket by the EPA without prior notice. The public docket is available for public inspection in Rm. 1132 at the address given above, from 8 a.m. to 4:30 p.m., Monday through Friday, excluding legal holidays.

Comments and data may also be submitted electronically by sending electronic mail (e-mail) to: opp-docket@epamail.epa.gov. Electronic comments must be submitted as an ASCII file avoiding the use of special characters and any form of encryption. Comments and data will also be accepted on disks in WordPerfect in 5.1 file format or ASCII file format. All comments and data in electronic form must be identified by the docket number, [OPP–300412]. No CBI should be submitted through e-mail. Electronic comments on this proposed rule may be filed online at many Federal Depository Libraries. Additional information on electronic submissions can be found below in this document.

FOR FURTHER INFORMATION CONTACT: By mail: Amelia M. Acierto, Registration Support Branch, Registration Division (7505W), Office of Pesticide Programs, Environmental Protection Agency, 401 M St., SW., Washington, DC 20460. Office location, telephone number, and e-mail address: 2800 Crystal Drive, North Tower, Arlington, VA, (703)-308-8375; e-mail: acierto.amelia@epamail.epa.gov.

SUPPLEMENTARY INFORMATION: Exxon Chemical Co., Performance Products Group, Linden, NJ 07036, submitted pesticide petition (PP) 3E04267 to EPA requesting that the Administrator, pursuant to section 408(e) of the Federal Food, Drug, and Cosmetic Act (FFDCA), 21 U.S.C. 346a(e), propose to amend 40 CFR 180.1001(d) by establishing an exemption from the requirement of a tolerance for oxo-alkyl acetates [oxo-hexyl acetate (CAS Reg. No. 88230-35-7), oxo-heptyl acetate (CAS Reg. No. 90438-79-2), oxo-octyl acetate (CAS Reg. No. 108419-32-5), oxo-nonyl acetate (CAS Reg. No. 108419-34-7), oxo-decyl acetate (CAS Reg. No. 108419-33-6), and oxo-tridecyl acetate (CAS Reg. No. 108419-35-8)] when used as solvents in pesticide formulations applied to growing crops only.

Inert ingredients are all ingredients that are not active ingredients as defined in 40 CFR 153.125, and include, but are not limited to, the following types of ingredients (except when they have a pesticidal efficacy of their own): solvents such as alcohols and hydrocarbons; surfactants such as polyoxyethylene polymers and fatty acids; carriers such as clay and diatomaceous earth; thickeners such as carrageenan and modified cellulose; wetting, spreading, and dispersing agents; propellants in aerosol dispensers; microencapsulating agents; and emulsifiers. The term ''inert'' is not intended to imply nontoxicity; the ingredient may or may not be chemically active.

The data submitted in the petition and other relevant material have been evaluated. As part of the EPA policy statement on inert ingredients published in the Federal Register of April 22, 1987 (52 FR 13305), the Agency set forth a list of studies which would generally be used to evaluate the risks posed by the presence of an inert ingredient in a pesticide formulation. However, where it can be determined without that data that the inert ingredient will present minimal or no risk, the Agency

generally does not require some or all of the listed studies to rule on the proposed tolerance or exemption from the requirement of a tolerance for an inert ingredient.

The data submitted for this petition are primarily for the oxo-octyl acetate and oxo-tridecyl acetate for which the Agency has decided are representative of the entire class of oxo-alkyl acetates having the general structure CH_3COOR where R is a branched alkyl group having carbon numbers in the range of C_6 through C_{14} and that no data, in addition to that described below will need to be submitted. The rationale for this decision is described below:

1. A subchronic oral toxicity study using oxo-octyl acetate in rats with a No Observed Effect Level (NOEL) of 100 mg/kg/day and a Lowest Effect Level (LEL) of 500 mg/kg/day based on increased liver weight in both sexes which indicate an overall low degree of systemic toxicity when administered orally to rats for 13 weeks.

2. A subchronic oral toxicity study using oxo-tridecyl acetate in rats with a NOEL of 100 mg/kg and a LEL of 500 mg/kg based on increased incidence of tubular nephropathy in the males and increased kidney and liver weights in both sexes indicating an overall low degree of systemic toxicity following subchronic oral administration of oxo-tridecyl acetate in rats.

3. The microbial mutagenesis study including *Salmonella* mammalian microsome plate incorporation assays showed no evidence that oxo-octyl acetate or oxo-tridecyl acetate produces any mutagenic effects at any dose tested, either with or without exogenous metabolic activation.

4. An *in vivo* mammalian bone marrow micronucleus assay oral gavage dosing method did not significantly increase the frequency of micronucleated polychromatic erythrocytes in mouse bone marrow at any dose of oxo-octyl acetate or oxo-tridecyl acetate (625, 1,250 or 2,500 mg/kg body weight) or sampling time (24, 48, and 72 hours post-treatment).

5. A developmental toxicity study with oxo-octyl acetate and oxo-tridecyl acetate in rats with the maternal systemic NOEL of 100 mg/kg/day and the maternal LOEL of 500 mg/kg based on decreased body weight and the developmental toxicity NOEL of 500 mg/kg/day and the developmental LOEL of 1,000 mg/kg based on increased incidence of various types of vertebral malformations.

6. An acute oral toxicity study with an acute oral LD_{50} of 5,000 mg/kg in rats indicating that oxo-octyl acetate or oxo-tridecyl acetate has little or no potential for hazard to rats.

7. An acute oral toxicity study with an acute oral LD_{50} of greater than 2,250 mg/kg in bobwhite quail indicating that oxo-octyl acetate or oxo-tridecyl acetate has little or no potential for hazard to avian species.

8. A dietary study with LC_{50} of greater than 5,620 ppm in bobwhite quail indicating that oxo-octyl acetate or oxo-tridecyl acetate are practically nontoxic to avian species.

Based upon the above evaluation of the toxicological data which shows no evidence of mutagenicity (Ames Test), and no significant acute and subchronic or developmental toxicity of the branched alkyl acetates in this molecular weight range (C_8-C_{13} alkyl acetates), the Agency concludes that this chemical poses no significant risks under the proposed conditions of use and that no further data are required.

Based upon the toxicological data evaluated above, the physico-chemical properties of oxo-alkyl acetates and information regarding their use, the Agency has found that, when used in accordance with good agricultural practice, these ingredients are useful and a tolerance is not necessary to protect the public health. Therefore, EPA proposes that the exemption from the requirement of a tolerance be established as set forth below.

Any person who has registered or submitted an application for registration of a pesticide, under the Federal Insecticide, Fungicide, and Rodenticide Act (FIFRA) as amended, which contains any of the ingredients listed herein, may request within 30 days after publication of this document in the Federal Register that this proposal be referred to an Advisory Committee in accordance with section 408(e) of the FFDCA.

Interested persons are invited to submit written comments on the proposed regulation. Comments must bear a notation indicating the docket control number, [OPP–300412]. All written comments filed in response to this petition will be available in the Public Response and Program Resources Branch, at the address given above from 8 a.m. to 4 p.m., Monday through Friday, except legal holidays.

A record has been established for this proposal under docket number [OPP–300412] (including comments and data submitted electronically as described below). A public version of this record, including printed, paper versions of electronic comments, which does not include any information claimed as CBI, is available for inspection from 8 a.m. to 4:30 p.m., Monday through Friday, excluding legal holidays. The public record is located in Room 1132 of the Public Response and Program Resources Branch, Field Operations Division (7506C), Office of Pesticide Programs, Environmental Protection Agency, Crystal Mall #2, 1921 Jefferson Davis Highway, Arlington, VA.

Electronic comments can be sent directly to EPA at:

opp-docket@epamail.epa.gov

Electronic comments must be submitted as an ASCII file avoiding the use of special characters and any form of encryption.

The official record for this proposal, as well as the public version, as described above will be kept in paper form. Accordingly, EPA will transfer all comments received electronically into printed, paper form as they are received and will place the paper copies in the official record which will also include all comments submitted directly in writing. The official rulemaking record is the paper record maintained at the address in ''ADDRESSES'' at the beginning of this document.

The Office of Management and Budget has exempted this proposed rule from the requirements of section 3 of Executive Order 12866.

Pursuant to the requirements of the Regulatory Flexibility Act (Pub. L. 96-354, 94 Stat. 1164, 5 U.S.C. 601-612), the Administrator has determined that regulations establishing new tolerances or raising tolerance levels or establishing exemptions from tolerance requirements do not have a significant economic impact on a substantial number of small entities. A certification statement to this effect was published in the Federal Register of May 4, 1981 (46 FR 24950).

List of Subjects in 40 CFR Part 180

Environmental protection, Administrative practice and procedure, Agricultural commodities, Pesticides and pests, Recording and recordkeeping requirements.

Dated: January 31, 1996.

Stephen L. Johnson,

Director, Registration Division, Office of Pesticide Programs.

Therefore, it is proposed that 40 CFR part 180 be amended as follows:

PART 180—[AMENDED]

1. The authority citation for part 180 continues to read as follows:

Authority: 21 U.S.C. 346a and 371.

2. Section 180.1001(d) is amended by adding and alphabetically inserting the

following inert ingredients, to read as follows:

§ 180.1001 Exemptions from the requirement of a tolerance.

* * * * *

(d) * * *

Inert ingredients	Limits	Uses
* * * * * * *		
Oxo-decyl acetate (CAS reg. No. 108419-33-6)		Solvent
Oxo-heptyl acetate (CAS Reg. No. 90438-79-2)		Solvent
Oxo-hexyl acetate (CAS Reg. No. 88230-35-7)		Solvent
Oxo-nonyl acetate (CAS Reg. No. 108419-34-7)		Solvent
Oxo-octyl acetate (CAS Reg. No. 108419-32-5)		Solvent
Oxo-tridecyl acetate (CAS Reg. No. 108419-35-8)		Solvent
* * * * * * *		

[FR Doc. 96–3018 Filed 2–13–96; 8:45 am]

BILLING CODE 6560–50–F

DEPARTMENT OF TRANSPORTATION

National Highway Traffic Safety Administration

49 CFR Parts 571 and 575

[Docket No. 96–09, Notice 01]

RIN 2127–AF81

Federal Motor Vehicle Safety Standards, Truck-Camper Loading; Consumer Information Regulations, Truck-Camper Loading

AGENCY: National Highway Traffic Safety Administration (NHTSA), Department of Transportation (DOT).

ACTION: Notice of proposed rulemaking.

SUMMARY: This document proposes to rescind Federal Motor Vehicle Safety Standard (Standard) No. 126, *Truck-camper loading,* and combine its provisions with 49 CFR 575.103, *Truck-camper loading.* This action is being proposed because a review of all of this agency's standards and regulations pursuant to the President's regulatory reinvention initiative led the agency to the tentative conclusion that combining these two rules into one will make their respective requirements easier to understand and apply.

DATE: Comments must be received on or before April 15, 1996.

ADDRESSES: Comments must refer to the docket number and notice number set forth above and be submitted, preferably in 10 copies, to: Docket Section, National Highway Traffic Safety Administration, 400 Seventh Street SW, Room 5109, Washington, DC 20590. Docket hours are from 9:30 a.m. to 4:00 p.m., Monday through Friday.

FOR FURTHER INFORMATION CONTACT: For technical issues: Robert M. Clarke, Office of Vehicle Safety Standards, National Highway Traffic Safety Administration, 400 Seventh Street, SW, Room 5307, Washington, DC 20590. Telephone (202) 366–5278, FAX (202) 366–4329. For legal issues: Walter Myers, Office of the Chief Counsel, National Highway Traffic Safety Administration, 400 Seventh Street, SW, Room 5219, Washington, DC 20590. Telephone: (202) 366–2992; FAX (202) 366–3820.

SUPPLEMENTARY INFORMATION:

Background

Standard No. 126 was initially established by final rule published on August 15, 1972 (37 FR 16497) to provide information that can be used by consumers to reduce overloading and improper load distribution in truck-camper combinations. The standard requires manufacturers of slide-in campers to affix a label to each camper specifying, among other things, the maximum weight of the camper and its equipment. The standard also requires that the owner's manual for the camper contain a picture showing the location of the longitudinal center of gravity of the camper when properly loaded. When initially published, the standard also required manufacturers of trucks capable of accommodating slide-in campers to include in the truck operator's manual a picture showing the manufacturer's recommended longitudinal center of gravity for the cargo weight rating of the camper and a picture of the proper match of a truck and slide-in camper.

On the same day, August 15, 1972, NHTSA published a notice of proposed rulemaking (NPRM) proposing to require that slide-in campers be identified by a vehicle identification number ''to facilitate any future defect notification and recall campaigns that might occur'' (37 FR 16505).

In a notice published on December 14, 1972 (37 FR 26605), NHTSA adopted the requirement for a vehicle identification number. In the same notice, in response to petitions for reconsideration of the final rule of August 15, 1972, which established Standard No. 126 (37 FR 16497), NHTSA withdrew the truck requirements from the standard and reissued them in 49 CFR 575.103, a consumer information regulation (37 FR 26607).

Pursuant to the March 4, 1994 directive entitled *Regulatory Reinvention Initiative* from the President to the heads of all Federal departments and agencies, NHTSA reviewed all its Federal motor vehicle safety standards and related regulations. As a result of that review, NHTSA identified several standards and regulations, or portions thereof, that it would propose to rescind or amend. The agency tentatively determined that the camper requirements of Standard No. 126 and the truck requirements of 49 CFR 575.103 should be combined into one regulation as before, but this time as a consumer information regulation rather than as a safety standard.

Agency Proposal

a. Truck Camper Loading

After reviewing the requirements for truck-camper loading, which involve labeling and certain information in the owner's manual, the agency has tentatively concluded that it serves no useful purpose to keep the camper requirements separate from the truck requirements in the CFR. The agency believes that it would be easier, more convenient, and more efficient for manufacturers, regulators, and the public to apply those provisions if they were combined rather than maintained as separate provisions in the CFR. Indeed, placing them together is appropriate since their subject matter is so closely related. Accordingly, the agency proposes to rescind Standard No. 126 and consolidate its requirements into 49 CFR 575.103.

b. Slide-in Camper Vehicle Identification Number

As stated in the *Background* discussion above, Standard No. 126 requires camper manufacturers to assign a vehicle identification number (VIN) to each slide-in camper they produce. Specifically, paragraph S5.1.1(e) provides that manufacturers must assign a number to each slide-in camper ''for identification purposes consisting of arabic numerals, roman letters, or both.'' The same paragraph further provides that no two campers produced within a 10-year period shall have the same identification number.

The final rule of December 14, 1972 stated that the purpose of the camper VIN was to increase the accuracy and efficiency of recall campaigns conducted by manufacturers to remedy safety defects. However, out of the 26 recalls that have been conducted under Standard No. 126 since its inception in 1972, none have involved or relied on the camper VIN. Information available to NHTSA discloses that while some camper manufacturers use a 17-digit VIN similar to the VIN required on vehicles by Standard No. 115 and 49 CFR Part 565, others combine the camper VIN and the camper serial number. Thus, there is no uniformity in the industry as to the application of the camper VIN. Agency experience in past slide-in camper recalls has been that the manufacturer's model and serial numbers are sufficient to identify the campers and/or the models involved in the recall. NHTSA has tentatively concluded, therefore, that requiring slide-in campers to have a VIN is redundant and does not serve its intended purpose. Accordingly, NHTSA proposes to delete the requirement for a vehicle identification number on slide-in campers.

Rulemaking Analyses and Notices

Executive Order 12866 and DOT Regulatory Policies and Procedures

This rulemaking document was not reviewed under E.O. 12866, *Regulatory Planning and Review*. NHTSA has considered the impact of this rulemaking action under the DOT's regulatory policies and procedures and has determined that it is not ''significant'' within the meaning of those policies and procedures.

The amendments proposed in this rulemaking action are intended to reorganize certain existing requirements and to eliminate a separate, unneeded requirement, thereby simplifying and streamlining the body of Federal regulations. The agency estimates that there would be no cost impact or lead time effects for either manufacturers, dealers, or consumers.

Elimination of the requirement for assigning and affixing a camper VIN would result in only minimal cost savings. Currently, camper manufacturers are required to place the camper VIN on the label containing other information about campers. Since camper manufacturers would continue to be required to place that label on their campers, being relieved of the necessity of placing a camper VIN on the label would at most enable the manufacturers to use a slightly smaller label.

Accordingly, the agency believes that impacts would be so minimal as not to warrant the preparation of a full preliminary regulatory evaluation.

Regulatory Flexibility Act

NHTSA has also considered the impacts of this notice under the Regulatory Flexibility Act. I hereby certify that this proposed rule would not have a significant economic impact on a substantial number of small entities. For the reasons stated above, this proposal would have no significant impact on manufacturers of slide-in campers and trucks capable of accommodating slide-in campers, thus would have no impact on the costs of those products. Accordingly, the agency has not prepared a preliminary regulatory flexibility analysis.

Executive Order 12612 (Federalism)

This action has been analyzed in accordance with the principles and criteria contained in Executive Order 12612, and it has been determined that the proposed rule would not have sufficient Federalism implications to warrant preparation of a Federalism Assessment. No state laws would be affected.

Paperwork Reduction Act

In accordance with the Paperwork Reduction Act of 1980, Pub. L. 96–511, the agency notes that there are no information collection requirements associated with this rulemaking action.

Executive Order 12778 (Civil Justice Reform)

This proposed rule would not have any retroactive effect. Under 49 U.S.C. 30103(b), whenever a Federal motor vehicle safety standard is in effect, a state or political subdivision thereof may prescribe or continue in effect a standard applicable to the same aspect of performance of a motor vehicle only if the state's standard is identical to the Federal standard. However, the United States government, a state or political subdivision thereof may prescribe a standard for a motor vehicle or motor vehicle equipment for its own use that imposes a higher performance requirement than that required by the Federal standard. 49 U.S.C. 30161 sets forth a procedure for judicial review of final rules establishing, amending or revoking Federal motor vehicle safety standards. This section does not require submission of a petition for reconsideration or other administrative procedures before parties may file suit in court.

Comments

Interested persons are invited to submit comments on the proposal. It is requested but not required that comments be submitted in 10 copies.

Comments must not exceed 15 pages in length (49 CFR 553.21). This limitation is intended to encourage commenters to detail their primary arguments in a concise fashion. Necessary attachments may be appended to these submissions without regard to the 15-page limit.

If a commenter wishes to submit certain information under a claim of confidentiality, 3 copies of the complete submission, including the purportedly confidential business information, should be submitted to the Chief Counsel, NHTSA, at the street address given above, and 7 copies from which the purportedly confidential information has been deleted should be submitted to the Docket Section. A request for confidentiality should be accompanied by a cover letter setting forth the information specified in 49 CFR Part 512, the agency's confidential business information regulation.

All comments received before the close of business on the comment closing date indicated above for the proposal will be considered, and will be available to the public for examination in the docket at the above address both before and after the closing date. To the extent possible, comments filed after the closing date will also be considered. Comments received too late for consideration in regard to the final rule will be considered as suggestions for further rulemaking action. The agency will continue to file relevant information in the docket as it becomes available after the closing date, and it is recommended that interested persons continue to examine the docket for new material.

Those persons desiring to be notified upon receipt of their comments in the docket section should enclose a self-addressed, stamped postcard in the envelope with their comments. Upon receiving the comments, the docket

supervisor will return the postcard by mail.

List of Subjects

49 CFR Part 571

Imports, Motor vehicle safety, Motor vehicles, Rubber and rubber products, Tires.

49 CFR Part 575

Consumer protection, Motor vehicle safety, Reporting and recordkeeping requirements, Tires.

In consideration of the foregoing, 49 CFR Parts 571 and 575 would be amended as follows:

PART 571—FEDERAL MOTOR VEHICLE SAFETY STANDARDS

1. The authority citation for Part 571 would continue to read as follows:

Authority: 49 U.S.C. 322, 30111, 30115, 30117, and 30166; delegation of authority at 49 CFR 1.50.

§ 571.126 [Removed]

2. Section 571.126 would be removed.

PART 575—CONSUMER INFORMATION REGULATIONS

3. The authority citation for Part 575 would continue to read as follows:

Authority: 49 U.S.C. 322, 30111, 30115, 30117, and 30166; delegation of authority at 49 CFR 1.50.

4. Section 575.103 would be revised to read as follows:

§ 575.103 Truck-camper loading.

(a) *Scope.* This section requires manufacturers of slide-in campers to affix to each camper a label that contains information relating to identification and proper loading of the camper and to provide more detailed loading information in the owner's manual. This section also requires manufacturers of trucks that would accommodate slide-in campers to specify the cargo weight ratings and the longitudinal limits within which the center of gravity for the cargo weight rating should be located.

(b) *Purpose.* The purpose of this section is to provide information that can be used to reduce overloading and improper load placement in truck-camper combinations and unsafe truck-camper matching in order to prevent accidents resulting from the adverse effects of these conditions on vehicle steering and braking.

(c) *Application.* This section applies to slide-in campers and to trucks that are capable of accommodating slide-in campers.

(d) *Definitions. Camper* means a structure designed to be mounted in the cargo area of a truck, or attached to an incomplete vehicle with motive power, for the purpose of providing shelter for persons.

Cargo Weight Rating means the value specified by the manufacturer as the cargo-carrying capacity, in pounds or kilograms, of a vehicle, exclusive of the weight of occupants in designated seating positions, computed as 150 pounds or 68 kilograms times the number of designated seating positions.

Slide-in Camper means a camper having a roof, floor, and sides, designed to be mounted on and removable from the cargo area of a truck by the user.

(e) *Requirements.*

(1) *Slide-in Camper.*

(i) *Labels.* Each slide-in camper shall have permanently affixed to it, in such a manner that it cannot be removed without defacing or destroying it, and in a plainly visible location on an exterior rear surface other than the roof, steps, or bumper extension, a label containing the following information in the English language lettered in block capitals and numerals not less than 2.4 millimeters (three thirty-seconds of an inch) high, of a color contrasting with the background, in the order shown below and in the form illustrated in Figure 1 to this section.

(A) Name of camper manufacturer. The full corporate or individual name of the actual assembler of the camper shall be spelled out, except that such abbreviations as ''Co.'' or ''Inc.'' and their foreign equivalents, and the first and middle initials of individuals may be used. The name of the manufacturer shall be preceded by the words ''Manufactured by'' or ''Mfd by.''

(B) Month and year of manufacture. It may be spelled out, such as ''June 1995'' or expressed in numerals, such as ''695.''

(C) The following statement completed as appropriate:

''Camper weight is _____ kg. (_____ lbs.) maximum when it contains standard equipment, _____ liters (_____ gal.) of water, _____ kg. (_____ lbs.) of bottled gas, and _____ cubic meters (_____ cubic ft.) refrigerator (or icebox with _____ kg. (_____ lbs.) of ice, as applicable). Consult owner's manual (or data sheet, as applicable) for weights of additional or optional equipment.''

(D) ''Liters (or gal.) of water'' refers to the volume of water necessary to fill the camper's fresh water tanks to capacity. ''Kg. (or lbs.) of bottled gas'' refers to the amount of gas necessary to fill the camper's bottled gas tanks to capacity. The statement regarding a ''refrigerator'' or ''icebox'' refers to the capacity of the refrigerator with which the vehicle is equipped or the weight of the ice with which the icebox may be filled. Any of these items may be omitted from the statement if the corresponding accessories are not included with the camper, provided that the omission is noted in the camper owner's manual as required in paragraph (e)(1)(ii) of this section.

(ii) *Owner's manual.* Each slide-in camper manufacturer shall provide with each camper a manual or other document containing the information specified in paragraphs (e)(1)(ii)(A) through (F) of this section.

(A) The statement and information provided on the label as specified in paragraph (e)(1)(i) of this section. Instead of the information required by paragraphs (e)(1)(i)(B) and (C) of this section, a manufacturer may use the statements ''See camper identification label located (as applicable) for month and year of manufacture.'' If water, bottled gas, or refrigerator (icebox) has been omitted from this statement, the manufacturer's information shall note such omission and advise that the weight of any such item when added to the camper should be added to the maximum camper weight figure used in selecting an appropriate truck.

(B) A list of other additional or optional equipment that the camper is designed to carry, and the maximum weight of each if its weight is more than 9 kg. (20 lbs) when installed.

(C) The statement: ''To estimate the total cargo load that will be placed on a truck, add the weight of all passengers in the camper, the weight of supplies, tools, and all other cargo, the weight of installed additional or optional camper equipment, and the manufacturer's camper weight figure. Select a truck that has a cargo weight rating that is equal to or greater than the total cargo load of the camper and whose manufacturer recommends a cargo center of gravity zone that will contain the camper's center of gravity when it is installed.''

(D) The statements: ''When loading this camper, store heavy gear first, keeping it on or close to the camper floor. Place heavy things far enough forward to keep the loaded camper's center of gravity within the zone recommended by the truck manufacturer. Store only light objects on high shelves. Distribute weight to obtain even side-to-side balance of the loaded vehicle. Secure loose items to prevent weight shifts that could affect the balance of your vehicle. When the truck-camper is loaded, drive to a scale and weigh on the front and on the rear wheels separately to determine axle loads. The load on an axle should not exceed its gross axle weight rating

(GAWR). The total of the axle loads should not exceed the gross vehicle weight rating (GVWR). These weight ratings are given on the vehicle certification label that is located on the left side of the vehicle, normally on the dash panel, hinge pillar, door latch post, or door edge next to the driver on trucks manufactured on or after January 1, 1972. If weight ratings are exceeded, move or remove items to bring all weights below the ratings.''

(E) A picture showing the location of the longitudinal center of gravity of the camper within an accuracy of 5 centimeters (2 inches) under the loaded condition specified in paragraph (e)(1)(i)(D) of this section in the manner illustrated in Figure 2 of this section.

(F) A picture showing the proper match of a truck and slide-in camper in the form illustrated in Figure 3 to this section.

(2) *Trucks.*

(i) Except as provided in paragraph (e)(2)(ii) of this section, each manufacturer of a truck that is capable of accommodating a slide-in camper shall provide to the purchaser in the owner's manual or other document delivered with the truck, in writing and in the English language, the information specified in paragraphs (e)(2)(i) (A) through (E) of this section.

(A) A picture showing the manufacturer's recommended longitudinal center of gravity zone for the cargo weight rating in the form illustrated in Figure 4 to this section. The boundaries of the zone shall be such that when a slide-in camper equal in weight to the truck's cargo weight rating is installed, no GAWR of the truck is exceeded.

(B) The truck's cargo weight rating.

(C) The statements: ''When the truck is used to carry a slide-in camper, the total cargo load of the truck consists of the manufacturer's camper weight figure, the weight of installed additional camper equipment not included in the manufacturer's camper weight figure, the weight of camper cargo, and the weight of passengers in the camper. The total cargo load should not exceed the truck's cargo weight rating and the camper's center of gravity should fall within the truck's recommended center of gravity zone when installed.''

(D) A picture showing the proper match of a truck and slide-in camper in the form illustrated in Figure 3 to this section.

(E) The statements: ''Secure loose items to prevent weight shifts that could affect the balance of your vehicle. When the truck camper is loaded, drive to a scale and weigh on the front and on the rear wheels separately to determine axle loads. Individual axle loads should not exceed either of the gross axle weight ratings (GAWR). The total of the axle loads should not exceed the gross vehicle weight rating (GVWR). These ratings are given on the vehicle certification label that is located on the left side of the vehicle, normally the dash, hinge pillar, door latch post, or door edge next to the driver. If weight ratings are exceeded, move or remove items to bring all weights below the ratings.''

(ii) If a truck would accommodate a slide-in camper but the manufacturer of the truck recommends that the truck not be used for that purpose, the information specified in paragraph (E) of this section shall not be provided but instead the manufacturer shall provide a statement that the truck should not be used to carry a slide-in camper.

Mfd. By: (Camper Manufacturer's Name)

(Month and Year of Manufacture)

Camper weight is _____ kg (_____ lb) maximum when it contains standard equipment, _____ liters (_____ gal) of water, _____ kg (_____ lb) of bottled gas, and _____ cubic meters (_____ cubic ft) refrigerator (or icebox with _____kg (_____lb) of ice, as applicable). Consult owner's manual (or data sheet as applicable) for weights of additional or optional equipment.

Figure 1. Label for Camper

BILLING CODE 4910–59–P

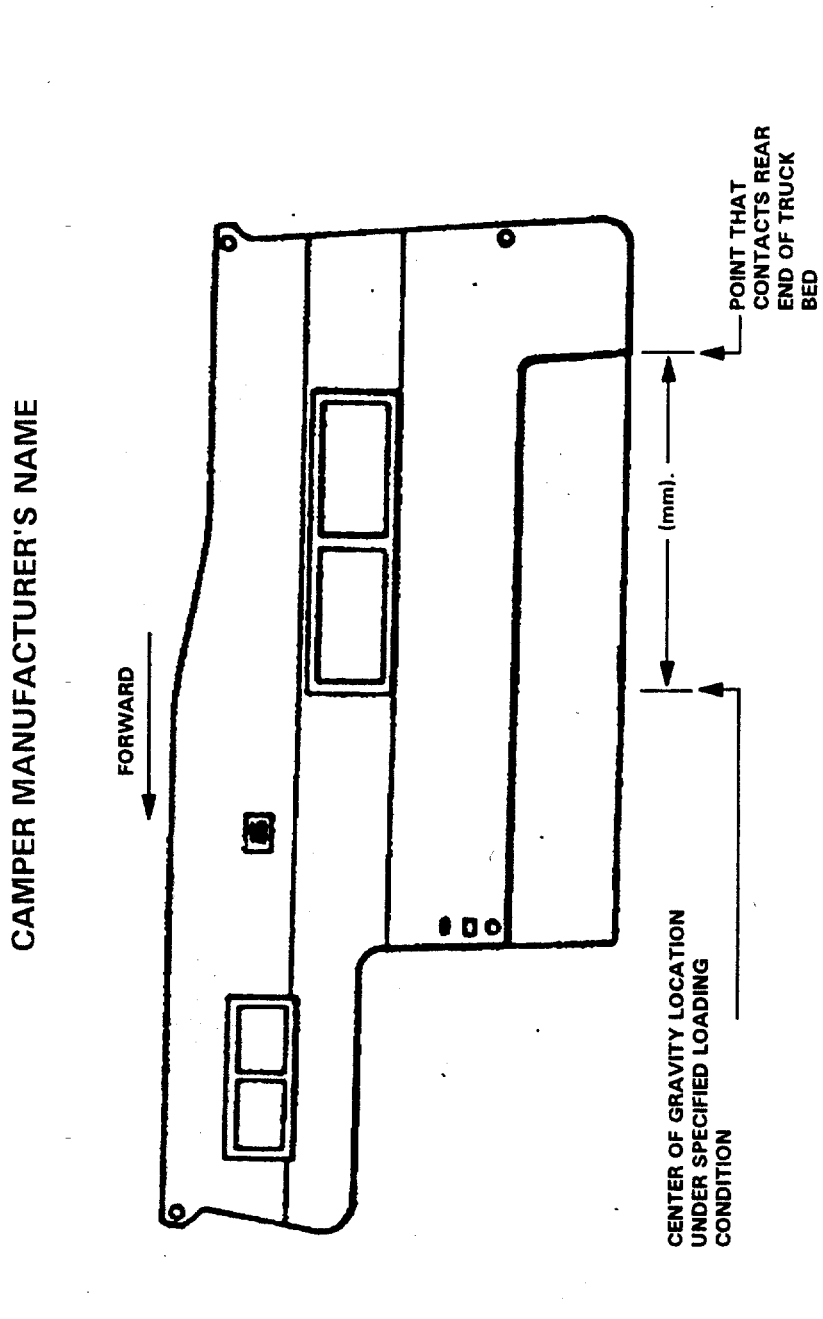

FIGURE 2. CAMPER CENTER OF GRAVITY INFORMATION

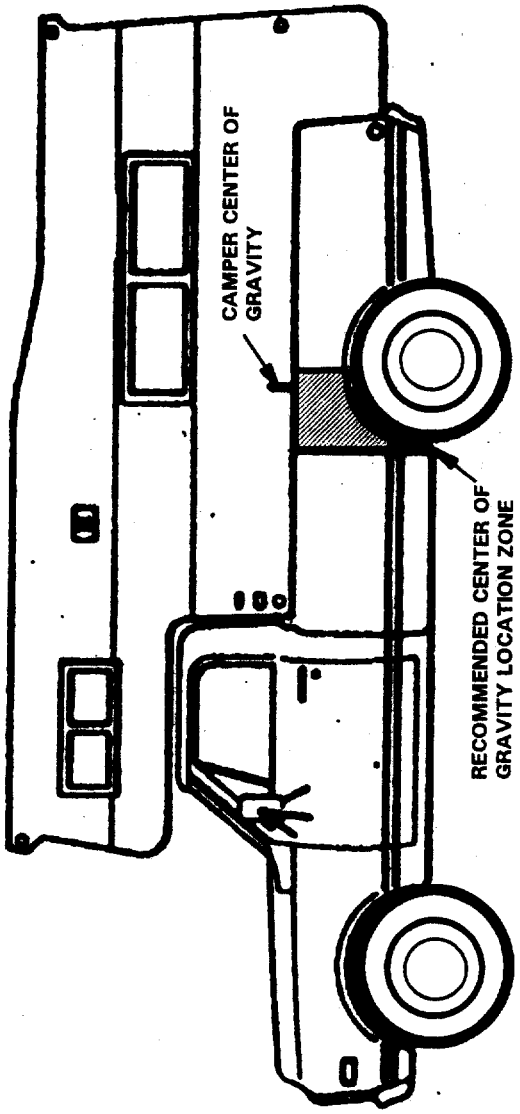

FIGURE 3. EXAMPLE OF PROPER TRUCK AND CAMPER MATCH

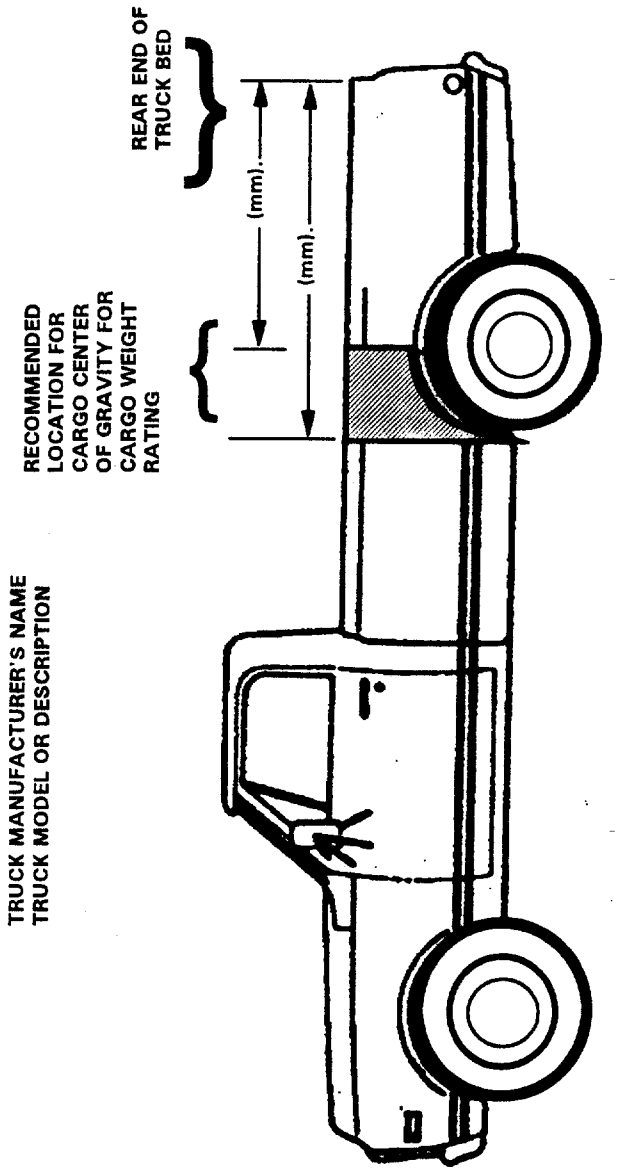

FIGURE 4. TRUCK LOADING INFORMATION

BILLING CODE 4910–59–C

Issued on February 8, 1996.

Barry Felrice,

Associate Administrator for Safety Performance Standards.

[FR Doc. 96–3178 Filed 2–13–96; 8:45 am]

BILLING CODE 4910–59–P

Notices

Federal Register
Vol. 61, No. 31
Wednesday, February 14, 1996

This section of the FEDERAL REGISTER contains documents other than rules or proposed rules that are applicable to the public. Notices of hearings and investigations, committee meetings, agency decisions and rulings, delegations of authority, filing of petitions and applications and agency statements of organization and functions are examples of documents appearing in this section.

DEPARTMENT OF AGRICULTURE

Forest Service

DEPARTMENT OF THE INTERIOR

Bureau of Indian Affairs

Bureau of Land Management

Fish and Wildlife Service

National Biological Service

National Park Service

[WO–1550–00–7111–24 1A]

Federal Wildland Fire Management Policy and Program Review

AGENCIES: Forest Service, U.S. Department of Agriculture; Bureau of Indian Affairs, Bureau of Land Management, Fish & Wildlife Service, National Biological Service, National Park Service, U.S. Department of the Interior.

ACTION: Notice; availability of final Federal Wildland Fire Management Policy and Program Review report.

SUMMARY: The interagency Steering Group chartered to review Federal wildland fire policy and program management has prepared a final report recommending one set of umbrella policies to enhance effective and efficient operations across administrative boundaries and improve the capability to meet challenges posed by current wildland fire conditions.

DATES: The final report will be available on February 14, 1996.

ADDRESSES: Copies of the final report may be obtained by writing to External Affairs, National Interagency Fire Center, 3833 South Development Avenue, Boise, ID 83705; by calling the National Interagency Fire Center (208) 387–5437 or 5101; or via Internet: http://www.fs.fed.us/land/wdfire.htm

FOR FURTHER INFORMATION CONTACT: Mike Apicello, USDA Forest Service (208) 387–5460; John E. Wright, USDOI (202) 208–6416.

SUPPLEMENTARY INFORMATION: Prior Notices relating to this report were issued in the Federal Register on January 3, 1995 (60 FR 95–96), June 22, 1995 (60 FR 32485–32503), and August 11, 1995 (60 FR 41054).

For the Department of Agriculture.

William L. McCleese,

Associate Deputy Chief, S&PF USDAFS.

Dated: February 5, 1996.

For the Department of the Interior.

Claudia P. Schechter,

Director of Operations, USDOI.

Dated: February 1, 1996.

[FR Doc. 96–3243 Filed 2–13–96; 8:45 am]

BILLING CODE 4310–84–M; 1410–11–M

Rural Utilities Service

Notice of Request for Extension of a Currently Approved Information Collection

AGENCY: Rural Utilities Service, USDA.

ACTION: Notice and request for comments.

SUMMARY: In accordance with the Paperwork Reduction Act of 1995 (44 U.S.C. Chapter 35, as amended), this notice announces the Rural Utilities Service's (RUS) intentions to request an extension to a currently approved information collection.

DATES: Comments on this notice must be received by April 15, 1996.

FOR FURTHER INFORMATION CONTACT: Dawn D. Wolfgang, Management Analyst, Program Support Staff, Rural Utilities Service, U.S. Department of Agriculture, 14th & Independence Ave., SW., AG Box 1522, Washington, DC 20250–1522. Telephone: (202) 720–0812. FAX: (202) 720–4120.

SUPPLEMENTAL INFORMATION:

Title: Inventory of Work Orders.

OMB Control Number: 0572–0019.

Type of Request: Extension of a currently approved information collection.

Abstract: When a prospective borrower requests and is granted an RUS loan, a loan contract is established between the Federal government, acting through the RUS Administrator, and the borrower. At the time this contract is entered into, the borrower must provide RUS with a list of projects for which loan funds will be spent, along with an itemized list of the estimated costs of these projects. Thus, the borrower receives loan funds based upon estimated cost figures. If, during or after completion of the project(s), the actual costs prove to be different from the estimated costs, the borrower must reconcile the discrepancies with RUS.

RUS Form 219, Inventory of Work Order, allows the borrower to adjust those estimated expenditures to reflect actual expenditures. The form serves as a connecting link and provides an audit trail that originates with the advance of funds and terminates with evidence supporting the propriety of expenditures for construction or retirement projects.

Estimate of Burden: Public reporting burden for this collection of information is estimated to average 1.5 hours per response.

Respondents: Small business or organizations.

Estimated Number of Respondents: 900.

Estimated Number of Responses per Respondent: 9.

Estimated Total Annual Burden on Respondents: 12,150.

Copies of this information collection, and related form and instructions, can be obtained from Dawn Wolfgang, Program Support Staff, at (202) 720–0812.

Comments are invited on: (a) Whether this proposed collection of information is necessary for the proper performance of the functions of the agency, including whether the information will have practical utility; (b) the accuracy of the agency's estimate of burden of the proposed collection of information; (c) ways to enhance the quality, utility, and clarity of the information to be collected; and (d) ways to minimize the burden of the collection of information on respondents, including through the use of automated collection techniques or other forms of information technology. Comments may be sent to: F. Lamont Heppe, Jr., Deputy Director, Program Support Staff, Rural Utilities Service, U.S. Department of Agriculture, 14th & Independence Ave., SW., AG Box 1522, Washington, DC 20250–1522. FAX: (202) 720–4120.

All responses to this notice will be summarized and included in the request for OMB approval. All comments will also become a matter of public record.

Dated: February 8, 1996.

Wally Beyer,

Administrator, Rural Utilities Service.

[FR Doc. 96–3266 Filed 2–13–96; 8:45 am]

BILLING CODE 3410–15–P

ARCHITECTURAL AND TRANSPORTATION BARRIERS COMPLIANCE BOARD

ADAAG Review Advisory Committee; Meeting

AGENCY: Architectural and Transportation Barriers Compliance Board.

ACTION: Notice of meeting.

SUMMARY: The Architectural and Transportation Barriers Compliance Board (Access Board) gives notice of the dates and location of the meeting of the ADAAG Review Advisory Committee.

DATES: The ADAAG Review Advisory Committee will meet on February 26, 27, 28, and 29, and March 1, 1996 beginning at 9:00 a.m. and ending not later than 5:00 p.m. each day.

ADDRESS: The meeting will be held at the Grand Hyatt, 1000 H Street, NW., Washington, DC.

FOR FURTHER INFORMATION CONTACT: For further information regarding the meeting, please contact Marsha Mazz, Office of Technical and Information Services, Architectural and Transportation Barriers Compliance Board, 1331 F Street, NW., Suite 1000, Washington, DC 20004–1111. Telephone (202) 272–5434 ext. 21 (voice); (202) 272–5449 (TTY). This document is available in alternate formats (cassette tape, braille, large print, or computer disk) upon request.

SUPPLEMENTARY INFORMATION: In September 1994, the Access Board established an advisory committee to review the Americans with Disabilities Act Accessibility Guidelines (ADAAG) for buildings and facilities. 36 CFR part 1191, appendix A. The Advisory Committee will make recommendations to the Access Board for updating ADAAG to ensure that the guidelines remain a state-of-the-art document which is generally consistent with technological developments and changes in national standards and model codes, and continue to meet the needs of individuals with disabilities. The advisory committee is composed of organizations representing individuals with disabilities, model code organizations, professional associations, State and local governments, building owners and operators, and other organizations. The advisory committee has formed the following subcommittees to assist in its work: Editorial, Accessible Routes, Communications, Plumbing, and Special Occupancies. The subcommittees completed their work in November 1995 with presentation of reports to the full advisory committee.

The full advisory committee will meet on the dates and at the location announced in this notice to review the subcommittee reports in the following order: Accessible Routes, Plumbing, Special Occupancies, Communications.

The meeting is open to the public. For persons interested in attending the meeting for a particular subcommittee report, there will be a recorded message on (202) 272–5434, ext. 21 by 6:00 a.m. each day containing information regarding the agenda status for each day. Persons who use TTYs should call (202) 272–5449. There will be a public comment period before the full advisory committee reviews each subcommittee report for the public to present their views. To accommodate everyone, persons presenting public comments will be limited to two minutes. The meeting site is accessible to individuals with disabilities. Individuals with hearing impairments who require sign language interpreters should contact Marsha Mazz by February 20, 1996, by calling (202) 272–5434 ext. 21 (voice) or (202) 272–5449 (TTY).

Lawrence W. Roffee,

Executive Director.

[FR Doc. 96–3316 Filed 2–13–96; 8:45 am]

BILLING CODE 8150–01–P

DEPARTMENT OF COMMERCE

Bureau of the Census

1996 Test Census—Enumerator Questionnaire

ACTION: Proposed Agency Information Collection Activity; Comment Request.

SUMMARY: The Department of Commerce, as part of its continuing effort to reduce paperwork and respondent burden, invites the general public and other Federal agencies to take this opportunity to comment on proposed and/or continuing information collections, as required by the Paperwork Reduction Act of 1995, Public Law 104–13 (44 U.S.C. 3506(c)(2)(A)).

DATES: Written comments must be submitted on or before April 15, 1996.

ADDRESSES: Direct all written comments to Margaret L. Woody, Department of Commerce, Room 5327, 14th and Constitution Avenue, NW, Washington, DC 20230.

FOR FURTHER INFORMATION CONTACT: Requests for additional information or copies of the information collection instrument and instructions should be directed to Fred Borsa, Bureau of the Census, Room 1769, FOB #3, Washington, DC 20233, (301) 457–2050.

SUPPLEMENTARY INFORMATION:

I. Abstract

The 1996 Test Census is designed to test new and improved methodologies for reducing the differential in the census results among the various components of the population, and for containing costs associated with conducting a census. The Census Bureau will use the results of this test, in combination with other research, to decide how to conduct the 2000 census. The test will be conducted in two rural sites and one urban site with a combined housing unit total of about 10,000. The rural sites (roughly 2,000 housing units) will encompass two American Indian reservations. The urban site (roughly 8,000 housing units) will encompass six census tracts in Chicago, Illinois.

A primary objective for both the rural and urban components of the test is to refine the Integrated Coverage Measurement (ICM) program. Other objectives are listed below.

Major objectives for the rural component of the test:

- Use and evaluate tribal ''administrative records,'' such as tribal rolls, utility records, tribal school records, and tribal voter registration as coverage improvement tools.
- Use improved address list development and collection methodology.
- Implement and evaluate a ''partnership agreement'' with the tribes, and expand the Tribal Liaison's role to include involvement in census operational activities.
- Test the use of statistical estimation techniques to improve the enumeration of residents on American Indian reservations and trust lands.

Major objectives for the urban component of the test:

- Test the ICM program in a reengineered census setting.
- Test techniques for measuring housing unit and noninstitutional group quarters coverage in a census setting.
- Test use of administrative records for coverage improvement.
- Test improved address listing techniques.

The 1996 Test Census will include four questionnaires—two self-

enumeration simple forms (consisting of basic population and housing questions), a self-enumeration individual Census Report (used to gather population information from residents of group quarters), and a self-enumeration Be Counted form (used only in the rural sites and made available at convenient locations for persons who did not receive a questionnaire or believe they were not counted).

The two simple forms are identical in content, except for the household rostering questions.

Another component of this test will be to evaluate two alternative approaches to household rostering. One roster design, called the ''rosterless'' version, does not require the respondent to create a traditional roster list. It includes an abbreviated set of instructions on who should be included and not included, and ask the respondent to provide the number of persons in the household. The second roster design, called the ''extended'' roster, includes a sequential set of reminders about whom to include, such as non-relatives as well as related persons, mobile persons who may have more than one residence, and persons with no usual residence.

Enumerator-administered questionnaires, identical in content to the two simple forms discussed above, also will be used in this test to conduct nonresponse followup operations for housing units that do not return their questionnaires by mail. This request only addresses the enumerator questionnaire.

II. Method of Collection

We will conduct a complete census in the three test sites. In the rural sites, census enumerators will deliver the questionnaires to the households. Respondents will be asked to complete the questionnaires and return them by mail in the postage-paid envelopes. In the Urban site, census questionnaires will be mailed to the housing units and returned in postage-paid envelopes.

Those housing units that do not return a census questionnaire by mail will be visited by enumerators who will conduct interviews using enumerator-administered questionnaires.

III. Data

OMB Number: Not available.

Form Number: DT–1E (Enumerator Questionnaire).

Type of Review: Regular.

Affected Public: Individuals and households.

Estimated Number of Respondents: 6,500 Housing units.

Estimated Time Per Response: 5 minutes (DT–1E).

Estimated Total Annual Burden Hours: Total-541.66 hours. The burden reflects time taken by field enumerators to complete the enumerator-administered census questionnaires during nonresponse followup for the 65 percent of household that we expect will not respond by mail. The burden for the enumerator forms, includes the portion of the form that is completed for vacant units.

DT–1E=*541.66 hours* [5 minutes x 6500 housing units].

Estimated Total Annual Cost: Same as costs identified in previous submission for this test.

IV. Request for Comments

Comments are invited on: (a) Whether the proposed collection of information is necessary for the proper performance of the functions of the agency, including whether the information shall have practical utility; (b) the accuracy of the agency's estimates of the burden (including hours and cost) of the proposed collection of information; (c) ways to enhance the quality, utility, and clarity of the information to be collected; and (d) ways to minimize the burden of the collection of information on respondents, including through the use of automated collection techniques or other forms of Information technology.

Comments submitted in response to this notice will be summarized and/or included in the request for OMB approval of this information collection; they also will become a matter of public records.

Margaret L. Woody,

Office of Management and Organization.

[FR Doc. 96–2952 Filed 2–13–96; 8:45 am]

BILLING CODE 3510–07–P

National Oceanic and Atmospheric Administration

National Weather Service Modernization and Associated Restructuring

ACTION: Notice and Opportunity for Public Comment.

SUMMARY: The National Weather Service (NWS) is publishing proposed certifications for the proposed consolidations of:

(1) Residual Moline Weather Service Office (RWSO) into the future Quad Cities WFO;

(2) Residual Raleigh WSO into the future Raleigh/Durham WFO;

(3) Hartford Weather Service Office (WSO) into the future Boston, New York City and Albany Weather Forecast Offices (WFOs);

(4) Baltimore WSO into the future Baltimore, MD/Washington, DC; Philadelphia; and Wakefield WFOs;

(5) Norfolk WSO into the future Wakefield WFO;

(6) Richmond WSO into the future Wakefield, Roanoke, and Baltimore, MD/Washington, DC WFOs;

(7) Atlantic City WSO into the future Philadelphia WFO; and

(8) Wilmington (WSO) into the future Philadelphia WFO. In accordance with Public Law 102–567, the public will have 60-days in which to comment on these proposed consolidation certifications.

DATE: April 15, 1996.

ADDRESS: Requests for copies of the proposed consolidation packages should be sent to Janet Gilmer, Room 12316, 1325 East-West Highway, Silver Spring, MD 20910, telephone 301–713–0276. All comments should be sent to Janet Gilmer at the above address.

FOR FURTHER INFORMATION CONTACT: Julie Scanlon at 301–713–1413.

SUPPLEMENTARY INFORMATION: NWS anticipates consolidating:

(1) The Residual Moline Weather Service Office (RWSO) with the future Quad Cities WFO;

(2) The Residual Raleigh WSO with the future Raleigh/Durham WFO;

(3) The Hartford Weather Service Office (WSO) with the future Boston, New York City and Albany Weather Forecast Offices (WFOs);

(4) The Baltimore WSO with the future Baltimore, MD/Washington, DC; Philadelphia; and Wakefield WFOs;

(5) The Norfolk WSO with the future Wakefield WFO;

(6) The Richmond WSO with the future Wakefield, Roanoke, and Baltimore, MD/Washington, DC WFOs;

(7) The Atlantic City WSO with the future Philadelphia WFO; and

(8) The Wilmington WSO with the future Philadelphia WFO.

In accordance with section 706 of Pub. L. 102–567, the Secretary of Commerce must certify that these consolidations will not result in any degradation of service to the affected areas of responsibility and must publish the proposed consolidation certifications in the FR. The documentation support each proposed certification includes the following:

(1) A draft memorandum by the meteorologist-in-charge recommending the certification, the final of which will be endorsed by the Regional Director and the Assistant Administrator of the NWS if appropriate, after consolidation of public comments and completion of

consultation with the Modernization Transition Committee (the Committee);

(2) A description of local weather characteristics and weather-related concerns which affect the weather services provided within the service area;

(3) A comparison of the services provided within the service area and the services to be provided after such action;

(4) A description of any recent or expected modernization of NWS operation which will enhance services in the service area;

(5) An identification of any area within the affected service area which would not receive coverage (at an elevation of 10,000 feet) by the next generation weather radar network;

(6) Evidence, based upon operational demonstration of modernized NWS operations, which was considered in reaching the conclusion that no degration in service will result from such action including the WSR–88D Radar Commissioning Report(s), User Confirmation of Services Report(s), and the Decommissioning Readiness Report (as applicable); and

(7) A letter appointing the liaison officer.

These proposed certifications do not include any report of the Committee which could be submitted in accordance with sections 706(b)(6) and 707(c) of Public Law 102–567. At their December 14, 1995 meeting the members ''* * * resolved that the MTC modify its procedure to eliminate proposed certification consultations of noncontroversial closings, consolidations, relocations, and automation certifications but will provide final consultation on certifications after public comment and before final submission to the Secretary of Commerce.''

Documentation supporting the proposed certifications is too voluminous to publish in its entirety. Copies of the supporting documentation can be obtained through the contact listed above.

Attached to this Notice are draft memoranda by the respective meteorologists-in-charge recommending the certifications.

Once all public comments have been received and considered, the NWS will complete consultation with the Committee and determine whether to proceed with the final certifications. If decisions to certify are made, the Secretary of Commerce must publish the final certifications in the FR and transmit the certifications to the appropriate Congressional committees prior to consolidating the offices.

Dated: February 9, 1996.

Louis J. Boezi,

Deputy Assistant Administrator for Modernization.

Memorandum For: Richard P. Augulis, Director, Central Region

From: Charles T. Fenley, MIC, NWSO Quad Cities, Davenport, IA

Subject: Recommendation for Consolidation Certification

In February 1995, a change of operations occurred when most personnel and most services provided by WSO Moline (located at the Quad City Airport), were transferred to the future WFO site in Davenport, Iowa. At that time, a Residual Weather Service Office (RWSO) was left in Moline to continue the surface and radar observational programs. Since that time, the Quad City Airport (Moline) ASOS has been commissioned (July 1, 1995), the WSR–88D radar has been commissioned (September 7, 1995), and the WSR–74C radar has been decommissioned (January 19, 1996). Radar observational services, and the responsibility thereof, that had been provided from the Moline Office have been transferred to the future Quad Cities WFO in Davenport, Iowa.

After reviewing the attached documentation, I have determined, in my professional judgment, consolidation of the Moline, Illinois Residual Weather Service Office (RWSO) with the future Quad Cities (Davenport, Iowa) Weather Forecast Office (WFO) will not result in any degradation in weather services to the Moline, Illinois service area. This proposed certification is in accordance with the advance notification provided in the National Implementation Plan. Accordingly, we are recommending you approve this action in accordance with section 706 of Public Law 102–567. If you concur, please endorse this recommendation and forward this package to the Assistant Administrator for Weather Services for final certification. If Dr. Friday approves, he will forward certification to the Secretary for approval and transmittal to Congress.

My recommendation is based on my review of the pertinent evidence and application of the modernization criteria for consolidation of a field office. In summary:

1. A description of local weather characteristics and weather-related concerns affecting the weather services provided to the pre-modernized Moline, Illinois service area is included as Attachment A. As discussed below, I find that providing the services which address these characteristics and concerns from the future Quad Cities (Davenport, Iowa) WFO will not degrade these services.

2. A detailed list of the services currently provided, within the Moline, Illinois service area from the Moline, Illinois RWSO location and a list of services to be provided from the future Quad Cities (Davenport, Iowa) WFO location after the proposed consolidation is included as Attachment B. Comparison of these services shows that all services currently provided will continue to be provided after the proposed consolidation. Also, the enclosed map shows the RWSO Moline, Illinois Area of Responsibility (i.e. ''Affected Service Area'') and the future Quad Cities (Davenport, Iowa) WFO Area of Responsibility. As discussed below, I find that there will be no degradation in the quality of those services as a result of consolidation.

3. A description of the recent or expected modernization of National Weather Service (NWS) operations which will enhance services in the RWSO Moline, Illinois service area is included as Attachment C. The new technology (i.e. ASOS, WSR–88D, and AWIPS) has or will be installed, and will enhance services.

4. A map showing planned NEXRAD coverage at an elevation of 10,000 feet for southeast, east central Iowa, and northwest Illinois is included as Attachment D. NWS operation radar coverage for the RWSO Moline, Illinois service area will be increased.

5. The following evidence, based upon operational demonstration of modernized NWS operations, played a key role in concluding there will be no degradation of service:

A. The WSR–88D RADAR Commissioning Reports from the Quad Cities (Davenport, Iowa), Attachment E, validate that the WSR–88D meets technical specifications (acceptance test); is fully operational (satisfactory operation of system interfaces and satisfactory support of associated NWS forecasting and warning services); service backup capabilities are functioning properly; a full set of operations and maintenance documentation is available; and spare parts and test equipment and trained operations and maintenance personnel are available on site. A full compliment of spares is on-station, but two national work-arounds remain in effect.

B. The User Confirmation of Services from the Quad Cities (Davenport, Iowa), Attachment F, document that no negative comments were received.

C. The Decommissioning Readiness Report, Attachment G, validates that the old WSR–74C radar at Moline, Illinois is no longer needed to support services or products for local office operations.

6. A memorandum assigning the liaison officer for the Moline, Illinois service area is included as Attachment H.

I have considered recommendations of the Modernization Transition Committee (Attachment I) and the _____ public comments received during the comment period (Attachment J). On _____, the Committee voted to endorse the proposed consolidation (Attachment K). I believe all negative comments have been addressed to the satisfaction of our customers and we continue to recommend certification.

Endorsement

I, Richard P. Augulis, Director, Central Region, endorse this consolidation certification.

Richard P. Augulis,

Attachments

Memorandum For: W/ER—John T. Forsing

From: Stephen Harned, AM/MIC NWSFO Raleigh/Durham, NC

Subject: Recommendation for Consolidation Certification

A change of operations occurred at the Raleigh Weather Service Forecast Office (WSFO), located at the Raleigh Airport, in January 1994 when most personnel were transferred to the facility of the future Raleigh/Durham Weather Forecast Office (WFO) on the campus of North Carolina State University in Raleigh to operate the WSR–88D and assume forecast and warning responsibility for the Raleigh service area. At the same time the Raleigh Airport (RDU) location was designated a Residual Weather Service Office (RWSO) to continue operating the existing WSR–74C radar and taking surface airways observations.

After reviewing the attached documentation, I have determined, in my professional judgment, consolidation of the RWSO RDU with the future Raleigh/Durham Weather Forecast Office (WFO) will not result in any degradation in weather services to the Raleigh service area. This proposed certification is in accordance with the advance notification provided in the National Implementation Plan. Accordingly, I am recommending you approve this action in accordance with section 706 of Public Law 102–567. If you concur, please endorse this recommendation and forward this package to the Assistant Administrator for Weather Services for final certification. If Dr. Friday approves, he will forward the certification to the Secretary for approval and transmittal to Congress.

My recommendation is based on my review of the pertinent evidence and application of the modernization criteria for consolidation of a field office. In summary:

1. A description of local weather characteristics and weather-related concerns affecting the weather services provided in the Raleigh service area is included as attachment A. As discussed below, I find that providing the services which address these characteristics and concerns from the future Raleigh/Durham WFO will not degrade these services.

2. A detailed list of the services currently provided within the Raleigh service area from the RSWO RDU location and a list of services to be provided from the future Raleigh area WFO location after the proposed consolidation is included as attachment B. Comparison of these services shows that all services currently provided will continue to be provided after the proposed consolidation. Also, the enclosed map shows the RWSO RDU Area of Responsibility (i.e. ''Affected Service Area'') and the future WFO Raleigh Area of Responsibility. As discussed below, I find that there will be no degradation in the quality of these services as a result of the consolidation.

3. A description of the recent or expected modernization of National Weather Service (NWS) operations which will enhance services in the RWSO RDU service area is included as attachment C. The new technology (i.e. ASOC, WSR–88D, and AWIPS) has or will be installed and will enhance services.

4. A map showing planned NEXRAD coverage at an elevation of 1,000 feet for North Carolina and portions of surrounding areas is included as attachment D. NWS operational radar coverage for the Raleigh service area will be increased and no area will be missed in coverage.

5. The following evidence, based upon operational demonstration of modernized NWS operations, played a key role in concluding there will be no degradation of service:

A. The WSR–88D RADAR Commissioning Reports from the Raleigh area, attachment E, validate that the WSR–88Ds meet technical specifications (acceptance test); are fully operational (satisfactory operation of system interface and satisfactory support of associated NWS forecasting and warning services); service backup capabilities are functioning properly; a full set of operations and maintenance documentation is available; and spare parts and test equipment and trained operations and maintenance personnel are available on site. Training was completed but two national work-arounds remain in effect.

B. The User Confirmation of Services from Raleigh attachment F, document that three negative comments were received. All negative comments have been answered to the satisfaction of the users as reflected in the report.

C. The Decommissioning Readiness Report, attachment G, verifies that the existing Raleigh WSR–74C radar is no longer needed to support services or products for local office operations.

6. A memorandum assigning the liaison officer for the Raleigh service area is included at attachment H.

I have considered recommendations of the Modernization Transition Committee (attachment I) and the _____ public comments received during the comment period (attachment J). On _____, the Committee voted to endorse the proposed consolidation (attachment K). I believe all negative comments have been addressed to the satisfaction of our customers and I continue to recommend this certification.

Endorsement

I, John T. Forsing, Director, Eastern Region, endorse this consolidation certification.

John T. Forsing,

Attachments

Memorandum For: W/ER—John T. Forsing
From:
Robert M. Thompson, AM/MIC NWSFO Boston, MA
Michael E. Wyllies, AM/MIC NWSFO New York City, NY
Warren Snyder, Acting MIC NWSFO Albany, NY
Subject: Recommendation for Consolidation Certification

After reviewing the attached documentation, we have determined, in our professional judgement, consolidation of the Hartford Weather Service Office (WSO BDL) with the future Boston, New York City and Albany Weather Forecast Office (WFOs) will not result in any degradation in weather services to the Hartford service area. This proposed certification is in accordance with the advance notification provided in the National Implementation Plan. Accordingly, we are recommending you approve this action in accordance with section 706 of Public Law 102–567. If you concur, please endorse this recommendation and forward this package to the Assistant Administrator for Weather Services for final certification. If Dr. Friday approves, he will forward the certification to the Secretary for approval and transmittal to Congress.

Our recommendation is based on our review of the pertinent evidence and application of the modernization criteria for consolidation of a field office. In summary:

1. A description of local weather characteristics and weather-related concerns affecting the weather services provided in the Hartford service area is included as attachment A. As discussed below, we find that providing the services which address these characteristics and concerns from the future Boston, New York City and Albany WFOs, will not degrade these services.

2. A detailed list of the services currently provided within the Hartford service area from the WSO BDL location and list of services to be provided from the future Boston Area, New York City Area and Albany Area WFOs locations after the proposed consolidation is included as attachment B. Comparison of these services shows that all services currently provided will continue to be provided after the proposed consolidation. Also, the enclosed map shows the WSO BDL Area of Responsibility (i.e. ''Affected Service Area'') and the future WFO Boston Area of Responsibility. As discussed below, I find that there will be no degradation in the quality of these services as a result of the consolidation.

3. A description of the recent or expected modernization of National Weather Service (NWS) operations which will enhance services in the WSO BBL service area is included as attachment C. The new technology (i.e. ASOS, WSR–88D, and AWIPS) has or will be installed and will enhance services.

4. A map showing planned NEXRAD coverage at an elevation of 10,000 feet for Connecticut and portions of surrounding areas is included as attachment D. NWS operational radar coverage for the Hartford service area will be increased and no area will be missed in coverage.

5. The following evidence, based upon operational demonstration of modernized NWS operations, played a key role in concluding there will be no degradation of service:

A. The WSR–88D RADAR Commissioning Report from the Boston, New York City and Albany areas, attachment E, validate that the WSR–88Ds meet technical specifications (acceptance test); are fully operational (satisfactory operation of system interfaces and satisfactory support of associated NWS forecasting and warning services); service backup capabilities are functioning properly; a full set of operations and maintenance documentation is available; and spare parts and test equipment and trained operations and maintenance personnel are available on site. Training was completed but two national work-arounds remain in effect.

B. The User Confirmation of Services from the future Boston, New York City and Albany WFOs areas, attachment F, document that a total of seven comments required follow-up.

All negative comments have been answered to the satisfaction of the users as reflected in the report.

C. The Decommissioning Readiness Report, attachment G, verifies that the existing Hartford local warning radar, WSR–74C, is no longer needed to support services or products for local office operations.

6. A memorandum assigning the liaison officer for the Hartford service area is included at attachment H.

We have considered recommendations of the Modernization Transition Committee (attachment I) and the _____ public comments received during the comment period (attachment J). On _____, the Committee voted to endorse the proposed consolidation (attachment K). We believe all negative comments have been addressed to the satisfaction of our customers and we continue to recommend this certification.

Endorsement

I, John T. Forsing, Director, Eastern Region, endorse this consolidation certification.

John T. Forsing,

Attachments

Memorandum For: W/ER—John T. Forsing
From:
James Travers, AM/MIC NWSFO Baltimore/Washington
G.C. Henricksen, AM/MIC NWSFO Philadelphia, PA
Anthony Siebers, MIC NWSO Wakefield, VA
Subject: Recommendation for Consolidation Certification

After reviewing the attached documentation, we have determined, in our professional judgment, consolidation of the Baltimore Weather Service Office (WSO BWI) with the future Wakefield, Baltimore/Washington and Philadelphia Weather Forecast Offices (WFOs) will not result in any degradation in weather services to the Baltimore service area. This proposed certification is in accordance with the advance notification provided in the National Implementation Plan. Accordingly, we are recommending you approve this action in accordance with section 706 of Public Law 102–567. If you concur, please endorse this recommendation and forward this package to the Assistant Administrator for Weather Services for final certification. If Dr. Friday approves, he will forward the certification to the Secretary for approval and transmittal to Congress.

Our recommendation is based on our review of the pertinent evidence and application of the modernization criteria for consolidation of a field office. In summary:

1. A description of local weather characteristics and weather-related concerns affecting the weather services provided in the Baltimore service area is included as attachment A. As discussed below, we find that providing the services which address these characteristics and concerns from the future Wakefield, Baltimore/Washington and Philadelphia WFOs, will not degrade these services.

2. A detailed list of the services currently provided within the Baltimore service area from the WSO BWI location and list of services to be provided from the future Wakefield, Baltimore/Washington and Philadelphia WFO locations after the proposed consolidation is included as attachment B. Comparison of these services shows that all services currently provided will continue to be provided after the proposed consolidation. Also, the enclosed map shows the WSO BWI Area of Responsibility (i.e. ''Affected Service Area'') and the future WFO Baltimore/Washington Area of Responsibility. As discussed below, we find that there will be no degradation in the quality of these services as a result of the consolidation.

3. A description of the recent or expected modernization of National Weather Service (NWS) operations which will enhance services in the WSO BWI service area is included as attachment C. The new technology (i.e. ASOS, WSR–88D, and AWIPS) has or will be installed and will enhance services.

4. A map showing planned NEXRAD coverage at an elevation of 10,000 feet for Maryland and portions of surrounding areas is included as attachment D. NWS operational radar coverage for the Baltimore service area will be increased and no area will be missed in coverage.

5. The following evidence, based upon operational demonstration of modernized NWS operations, played a key role in concluding there will be no degradation of service:

A. The WSR–88D RADAR Commissioning Reports from the Wakefield, Baltimore/Washington and Philadelphia areas, attachment E, validate that the WSR–88Ds meet technical specifications (acceptance test); are fully operational (satisfactory operation of system interfaces and satisfactory support of associated NWS forecasting and warning services); service backup capabilities are functioning properly; a full set of operations and maintenance documentation is available; and spare parts and test equipment and trained operations and maintenance personnel are available on site. Training was completed but two national work-arounds remain in effect.

B. The User Confirmation of Services from the future Wakefield, Baltimore/Washington and Philadelphia WFO areas, attachment F, document that a total of six comments required follow-up. All negative comments have been answered to the satisfaction of the users as reflected in the report.

C. The Decommissioning Readiness Report, attachment G, is not necessary since WSO BWI does not have a radar.

6. A memorandum assigning the liaison officer for the Baltimore service area is included at attachment H.

We have considered recommendations of the Modernization Transition Committee (attachment I) and the _____ public comments received during the comment period (attachment J). On _____, the Committee voted to endorse the proposed consolidation (attachment K). We believe all negative comments have been addressed to the satisfaction of our customers and we continue to recommend this certification.

Endorsement

I, John T. Forsing, Director, Eastern Region, endorse this consolidation certification.

John T. Forsing,

Attachments

Memorandum For: W/ER—John T. Forsing
From: Anthony L. Siebers, MIC NWSO Wakefield, VA
Subject: Recommendation for Consolidation Certification

After reviewing the attached documentation, I have determined, in my professional judgment, consolidation of the Norfolk Weather Service Office (WSO ORF) with the future Wakefield Weather Forecast Office (WFO) will not result in any degradation in weather services to the Norfolk service area. This proposed certification is in accordance with the advance notification provided in the National Implementation Plan. Accordingly, I am recommending you approve this action in accordance with section 706 of Public Law 102–567. If you concur, please endorse this recommendation and forward this package to the Assistant Administrator for Weather Services for final certification. If Dr. Friday approves, he will forward the certification to the Secretary for approval and transmittal to Congress.

My recommendation is based on my review of the pertinent evidence and application of the modernization criteria for consolidation of a field office. In summary:

1. A description of local weather characteristics and weather-related concerns affecting the weather services provided in the Norfolk service area is included as attachment A. As discussed below, I find that providing the services which address these characteristics and concerns from the future Wakefield WFO will not degrade these services.

2. A detailed list of the services currently provided within the Norfolk service area from the WSO ORF location and a list of services to be provided from the future Wakefield WFO location after the proposed consolidation is included as attachment B. Comparison of these services shows that all services currently provided will continue to be provided after the proposed consolidation. Also, the enclosed map shows the WSO ORF Area of Responsibility (i.e. ''Affected Service Area'') and the future WFO Wakefield Area of Responsibility. As discussed below, I find that there will be no degradation in the quality of these services as a result of the consolidation.

3. A description of the recent or expected modernization of National Weather Service (NWS) operations which will enhance services in the WSO ORF service area is included as attachment C. The new technology (i.e. ASOS, WSR–88D, and AWIPS) has or will be installed and will enhance services.

4. A map showing planned NEXRAD coverage at an elevation of 10,000 feet for Virginia and portions of surrounding areas is included as attachment D. NWS operational radar coverage for the Norfolk service area will be increased and no area will be missed in coverage.

5. The following evidence, based upon operational demonstration of modernized NWS operations, played a key role in concluding there will be no degradation of service:

A. The WSR–88D RADAR Commissioning Reports from the Wakefield area, attachment E, validate that the WSR–88Ds meet technical specifications (acceptance test); are fully operational (satisfactory operation of system interfaces and satisfactory support of associated NWS forecasting and warning services); service backup capabilities are functioning properly; a full set of operations and maintenance documentation is available; and spare parts and test equipment and trained operations and maintenance personnel are available on site. Training was completed but two national work-arounds remain in effect.

B. The User Confirmation of Services from Wakefield, attachment F, document that three responses required follow-up. All negative comments have been answered to the satisfaction of the users as reflected in the report.

C. The Decommissioning Readiness Report, attachment G, is not needed as WSO ORF does not have a radar.

6. A memorandum assigning the liaison officer for the Norfolk service area is included at attachment H.

I have considered recommendations of the Modernization Transition Committee (attachment I) and the _____ public comments received during the comment period (attachment J). On _____, the Committee voted to endorse the proposed consolidation (attachment K). I believe all negative comments have been addressed to the satisfaction of our customers and I continue to recommend this certification.

Endorsement

I, John T. Forsing, Director, Eastern Region, endorse this consolidation certification.

John T. Forsing,

Attachments

Memorandum For: W/ER—John T. Forsing
From:
Anthony Siebers, MIC NWSO Wakefield, VA
James Travers, AM/MIC NWSFO Baltimore/Washington
John V. Wright, MIC NWSO Roanoke, VA
Subject: Recommendation for Consolidation Certification

After reviewing the attached documentation, we have determined, in our professional judgment, consolidation of the Richmond Weather Service Office (WSO RIC) with the future Wakefield, Baltimore/Washington and Roanoke Weather Forecast Offices (WFOs) will not result in any degradation in weather services to the Richmond service area. This proposed certification is in accordance with the advance notification provided in the National Implementation Plan. Accordingly, we are recommending you approve this action in accordance with section 706 of Public Law 102–567. If you concur, please endorse this recommendation and forward this package to the Assistant Administrator for Weather Services for final certification. If Dr. Friday approves, he will forward the certification to the Secretary for approval and transmittal to Congress.

Our recommendation is based on our review of the pertinent evidence and application of the modernization criteria for consolidation of a field office. In summary:

1. A description of local weather characteristics and weather-related concerns affecting the weather services provided in the Richmond service area is included as attachment A. As discussed below, we find that providing the services which address these characteristics and concerns from the future Wakefield, Baltimore/Washington and Roanoke WFOs, will not degrade these services.

2. A detailed list of the services currently provided within the Richmond service area from the WSO RIC location and list of services to be provided from the future Wakefield, Baltimore/Washington and Roanoke WFOs locations after the proposed consolidation is included as attachment B. Comparison of these services shows that all services currently provided will continue to be provided after the proposed consolidation. Also, the enclosed map shows the WSO RIC Area of Responsibility (i.e. ''Affected Service Area'') and the future WFO Wakefield Area of Responsibility. As discussed below, we find that there will be no degradation in the quality of these services as a result of the consolidation.

3. A description of the recent or expected modernization of National Weather Service (NWS) operations which will enhance services in the WSO RIC service area is included as attachment C. The new technology (i.e. ASOS, WSR–88D, and AWIPS) has or will be installed and will enhance services.

4. A map showing planned NEXRAD coverage at an elevation of 10,000 feet for Virginia and portions of surrounding areas is included as attachment D. NWS operational radar coverage for the Richmond service area will be increased and no area will be missed in coverage.

5. The following evidence, based upon operational demonstration of modernized NWS operations, played a key role in concluding there will be no degradation of service:

A. The WSR–88D RADAR Commissioning Reports from the Wakefield, Baltimore/Washington and Roanoke areas, attachment E, validate that the WSR–88Ds meet technical specifications (acceptance test); are fully operational (satisfactory operation of system interfaces and satisfactory support of associated NWS forecasting and warning services); service backup capabilities are functioning properly; a full set of operations and maintenance documentation is available; and spare parts and test equipment and trained operations and maintenance personnel are available on site. Training was completed but two national work-arounds remain in effect.

B. The User Confirmation of Services from the future Wakefield, Baltimore/Washington and Roanoke WFO areas, attachment F, document that a total of 13 comments required follow-up. All negative comments have been answered to the satisfaction of the users as reflected in the report.

C. The Decommissioning Readiness Report, attachment G, is not necessary since WSO RIC does not have a radar.

6. A memorandum assigning the liaison officer for the Richmond service area is included at attachment H.

We have considered recommendations of the Modernization Transition Committee (attachment I) and the _____ public comments received during the comment period (attachment J). On _____, the Committee voted to endorse the proposed consolidation (attachment K). We believe all negative comments have been addressed to the satisfaction of our customers and we continue to recommend this certification.

Endorsement

I, John T. Forsing, Director, Eastern Region, endorse this consolidation certification.

John T. Forsing,

Attachments

Memorandum For: W/ER—John T. Forsing
From: Chet Henricksen, AM/MIC NWSFO Philadelphia, PA
Subject: Recommendation for Consolidation Certification

After reviewing the attached documentation, I have determined, in my professional judgment, consolidation of the Weather Service Office (WSO) Atlantic City, NJ with the Philadelphia Weather Forecast Offices (WFO) will not result in any degradation in weather services to the Atlantic City service area. This proposed certification is in accordance with the advance notification provided in the National Implementation Plan. Accordingly, I am recommending you approve this action in accordance with section 706 of Public Law 102–567. If you concur, please endorse this recommendation and forward this package to the Assistant Administrator for Weather Services for final certification. If Dr. Friday approves, he will forward the certification to the Secretary for approval and transmittal to Congress.

My recommendation is based on my review of the pertinent evidence and application of the modernization criteria for consolidation of a field office. In summary:

1. A description of local weather characteristics and weather-related concerns affecting the weather services provided in the Atlantic City service area is included as attachment A. As discussed below, I find that providing the services which address these characteristics and concerns from the future Philadelphia WFO will not degrade these services.

2. A detailed list of the services currently provided within the Atlantic City service area from WSO Atlantic City location and a list of services to be provided from the future Philadelphia WFO location after the proposed consolidation is included as attachment B. Comparison of these services shows that all services currently provided will continue to be provided after the proposed consolidation. Also, the enclosed map shows the WSO Atlantic City Area of Responsibility (i.e. ''Affected Service Area'') and the future WFO Philadelphia Area of Responsibility. As discussed below, I find that there will be no degradation in the

quality of these services as a result of the consolidation.

3. A description of the recent or expected modernization of National Weather Service (NWS) operations which will enhance services in the WSO Atlantic City service area is included as attachment C. The new technology (i.e. ASOS, WSR–88D, and AWIPS) has or will be installed and will enhance services.

4. A map showing planned NEXRAD coverage at an elevation of 10,000 feet for New Jersey and portions of surrounding areas is included as attachment D. NWS operational radar coverage for the Atlantic City service area will be increased and no area will be missed in coverage.

5. The following evidence, based upon operational demonstration of modernized NWS operations, played a key role in concluding there will be no degradation of service:

A. The WSR–88D RADAR Commissioning Report from Philadelphia, attachment E validate that the WSR–88D meet technical specifications (acceptance test); are fully operational (satisfactory operation of system interfaces and satisfactory support of associated NWS forecasting and warning services); service backup capabilities are functioning properly; a full set of operations and maintenance documentation is available; and spare parts and test equipment and trained operations and maintenance personnel are available on site. Training was completed but two national work-arounds remain in effect.

B. The User Confirmation of Services from Philadelphia, attachment F, document that no negative comments were received for the Philadelphia NWSFO area related.

C. The Decommissioning Readiness Report, attachment G, verifies that the existing Atlantic City WSR–57 radar is no longer needed to support services or products for local office operations.

6. A memorandum assigning the liaison officer for the Atlantic City service area is included at attachment H.

I have considered recommendations of the Modernization Transition Committee (attachment I) and the _____ public comments received during the comment period (attachment J). On _____, the Committee voted to endorse the proposed consolidation (attachment K). I believe all negative comments have been addressed to the satisfaction of our customers and I continue to recommend this certification.

Endorsement

I, John T. Forsing, Director, Eastern Region, endorse this consolidation certification.

John T. Forsing,

Attachments

Memorandum For: W/ER—John T. Forsing
From: Chet Henricksen, AM/MIC NWSFO Philadelphia, PA
Subject: Recommendation for Consolidation Certification

After reviewing the attached document, I have determined, in my professional judgement, consolidation of the Weather Service Office (WSO) Wilmington, DE with the future Philadelphia Weather Forecast Office (WFO) will not result in any degradation in weather services to the Wilmington service area. This proposed certification is in accordance with the advance notification provided in the National Implementation Plan. Accordingly, I am recommending you approve this action in accordance with section 706 of Public Law 102–567. If you concur, please endorse this recommendation and forward this package to the Assistant Administrator for Weather Services for final certification. If Dr. Friday approves, he will forward the certification to the Secretary for approval and transmittal to Congress.

My recommendation is based on my review of the pertinent evidence and application of the modernization criteria for consolidation of a field office. In summary:

1. A description of local weather characteristics and weather-related concerns affecting the weather services provided in the Wilmington service area is included as attachment A. As discussed below, I find that providing the services which address these characteristics and concerns from the future Philadelphia WFO will not degrade these services.

2. A detailed list of the services currently provided within the Wilmington service area from WSO Wilmington location and a list of services to be provided from the future Philadelphia WFO location after the proposed consolidation is included in attachment B. Comparison of these services shows that all services currently provided will continue to be provided after the proposed consolidation. Also, the enclosed map shows the WSO Wilmington Area of Responsibility (i.e. ''Affected Service Area'') and the future WFO Philadelphia Area of Responsibility. As discussed below, I find that there will be no degradation in the quality of these services as a result of the consolidation.

3. A description of the recent or expected modernization of National Weather Service (NWS) operations which will enhance services in the WSO Wilmington service area is included as attachment C. The new technology (i.e. ASOS, WSR–88D, and AWIPS) has or will be installed and will enhance services.

4. A map showing planned NEXRAD coverage at an elevation of 10,000 feet for Delaware and portions of surrounding areas is included as attachment D. NWS operational radar coverage for the Delaware service area will be increased and no area will be missed in coverage.

5. The following evidence, based upon operational demonstration of modernized NWS operations, played a key role in concluding there will be no degradation of service:

A. The WSR–88D RADAR Commissioning Reports from Philadelphia, attachment E validate that the WSR–88D meet technical specifications (acceptance test); are fully operational (satisfactory operation of system interfaces and satisfactory support of associated NWS forecasting and warning services); service backup capabilities are functioning properly; a full set of operations and maintenance documentation is available; and spare parts and test equipment and trained operations and maintenance personnel are available on site. Training was completed but two national work-arounds remain in effect.

B. The User Confirmation of Services from Philadelphia, attachment F, document that no negative comments were received for the Philadelphia NWSFO area related.

C. WSO Wilmington does not have a radar, therefore, the Decommissioning Readiness Report, attachment G, is not necessary for this report.

6. A memorandum assigning the liaison officer for the Wilmington service area is included at attachment H.

I have considered recommendations of the Modernization Transition Committee (attachment I) and the _____ public comments received during the comment period (attachment J). On _____, the Committee voted to endorse the proposed consolidation (attachment K). I believe all negative comments have been addressed to the satisfaction of our customers and I continue to recommend this certification.

Endorsement

I, John T. Forsing, Director, Eastern Region, endorse this consolidation certification.

John T. Forsing,

Attachments

[FR Doc. 96–3379 Filed 2–13–96; 8:45 am]

BILLING CODE 3510–12–M

National Weather Service Modernization and Associated Restructuring

ACTION: Notice and opportunity for public comment.

SUMMARY: The National Weather Service (NWS) is publishing proposed certifications for the proposed consolidations of:

(1) Residual Portland, ME Weather Service Office (RWSO) into the future Portland, ME WFO;

(2) Concord Weather Service Office (WSO) into the future Portland, ME and Boston Weather Forecast Offices (WFOs);

(3) Mansfield WSO into the future Cleveland WFO;

(4) Youngstown WSO into the future Cleveland and Pittsburgh WFOs;

(5) Dayton WSO into the future Cincinnati WFO;

(6) Toledo WSO into the future Cleveland and Cincinnati WFOs;

(7) Lynchburg WSO into the future Roanoke WFO;

(8) Roanoke WSO into the future Roanoke WFO;

(9) Cape Hatteras WSO into the future Morehead City and Wakefield WFOs;

(10) Akron WSO into the future Cleveland, Pittsburgh, and Charleston, WV WFOs;

(11) Columbus, OH WSO into the future Cincinnati, Cleveland, Pittsburgh, and Charleston, WV WFOs;

(12) Harrisburg WSO into the future Central Pennsylvania WFO; and

(13) Williamsport WSO into the future Central Pennsylvania and Binghamton WFOs.

In accordance with Public Law 102–567, the public will have 60-days in which to comment on these proposed consolidation certifications.

DATES: Comments are requested by April 15, 1996.

ADDRESSES: Requests for copies of the proposed consolidation packages should be sent to Janet Gilmer, Room 12316, 1325 East-West Highway, Silver Spring, MD 20910, telephone 301–713–0276. All comments should be sent to Janet Gilmer at the above address.

FOR FURTHER INFORMATION CONTACT: Julie Scanlon at 301–713–1413.

SUPPLEMENTAL INFORMATION: NWS anticipates consolidating:

(1) The Residual Portland, ME Weather Service Forecast Office (WSFO) with the future Portland, ME WFO;

(2) The Concord Weather Service Office (WSO) with the future Portland, ME and Boston Weather Forecast Offices (WFOs);

(3) The Mansfield WSO with the future Cleveland WFO;

(4) The Youngstown WSO with the future Cleveland and Pittsburgh WFOs;

(5) The Dayton WSO with the future Cincinnati WFO;

(6) The Toledo WSO with the future Cleveland and Cincinnati WFOs;

(7) The Lynchburg WSO with the future Roanoke WFO;

(8) The Roanoke WSO with the future Roanoke WFO;

(9) The Cape Hatteras WSO with the future Morehead City and Wakefield WFOs;

(10) The Akron WSO with the future Cleveland, Pittsburgh, and Charleston, WV WFOs;

(11) The Columbus, OH WSO with the future Cincinnati, Cleveland, Pittsburgh, and Charleston, WV WFOs;

(12) The Harrisburg WSO with the future Central Pennsylvania WFO; and

(13) The Williamsport WSO with the future Central Pennsylvania and Binghamton WFOs.

In accordance with section 706 of Public Law 102–567, the Secretary of Commerce must certify that these consolidations will not result in any degradation of service to the affected areas of responsibility and must publish the proposed consolidation certifications in the FR. The documentation supporting each proposed certification includes the following:

(1) A draft memorandum by the meteorologist-in-charge recommending the certification, the final of which will be endorsed by the Regional Director and the Assistant Administrator of the NWS if appropriate, after consideration of public comments and completion of consultation with the Modernization Transition Committee (the Committee);

(2) A description of local weather characteristics and weather-related concerns which affect the weather services provided within the service area;

(3) A comparison of the services provided within the service area and the services to be provided after such action;

(4) A description of any recent or expected modernization of NWS operation which will enhance services in the service area;

(5) An identification of any area within the affected service area which would not receive coverage (at an elevation of 10,000 feet) by the next generation weather radar network;

(6) Evidence, based upon operational demonstration of modernized NWS operations, which was considered reaching the conclusion that no degradation in service will result from such action including the WSR–88D Radar Commissioning Report(s), User Confirmation of Services Report(s), and the Decommissioning Readiness Report (as applicable); and

(7) A letter appointing the liaison officer.

These proposed certifications do not include any report of the Committee which could be submitted in accordance with sections 706(b)(6) and 707(c) of Public Law 102–567. At their December 14, 1995 meeting the members ''* * * resolved that the MTC modify its procedure to eliminate proposed certification consultations of noncontroversial closings, consolidations, relocations, and automation certifications but will provide final consultation on certifications after public comment and before final submission to the Secretary of Commerce.''

Documentation supporting the proposed certifications is too voluminous to publish in its entirety. Copies of the supporting documentation can be obtained through the contact listed above.

Attached to this Notice are draft memoranda by the respective meteorologists-in-charge recommending the certifications.

Once all public comments have been received and considered, the NWS will complete consultation with the Committee and determine whether to proceed with the final certifications. If decisions to certify are made, the Secretary of Commerce must publish the final certifications in the FR and transmit the certifications to the appropriate Congressional committees prior to consolidating the offices.

Dated: February 7, 1996.

Elbert W. Friday, Jr.,

Assistant Administrator for Weather Services.

Memorandum For: W/ER—John T. Forsing
From: Albert W. Wheeler, AM/MIC NWSFO Portland, ME
Subject: Recommendation for Consolidation Certification

A change of operations occurred at the Portland Weather Service Forecast Office (WSFO), located at the Portland Jet Port, in September 1994 when most personnel were transferred to the facility of the future Portland Area Weather Forecast Office (WFO) in Gray, Maine to operate the WSR–88D and assume forecast and warning responsibility for the Portland service area. At the same time the Portland Jet Port (PWM) location was designated a Residual Weather Service Office (RWSO) to continue operating the existing WSR–74S radar and taking surface airways observations.

After reviewing the attached documentation, I have determined, in my professional judgment, consolidation of the RWSO PWM with the future Portland Area Weather Forecast Office (WFO) will not result in any degradation in weather services to the Portland service area. This proposed certification is in accordance with the advance notification provided in the National Implementation Plan. Accordingly, I am recommending you approve this action in accordance with section 706 of Public Law 102–567. If you concur, please endorse this recommendation and forward this package to the Assistant Administrator for Weather Services for final certification. If Dr. Friday approves, he will forward the certification to the Secretary for approval and transmittal to Congress.

My recommendation is based on my review of the pertinent evidence and application of the modernization criteria for consolidation of a field office. In summary:

1. A description of local weather characteristics and weather-related concerns affecting the weather services provided in the Portland service area is included as attachment A. As discussed below, I find that providing the services which address these characteristics and concerns from the future Portland Area WFO will not degrade these services.

2. A detailed list of the services currently provided within the Portland service area from the RWSO PWM location and a list of services to be provided from the future Portland area WFO location after the proposed consolidation is included as attachment B. Comparison of these services shows that all services currently provided will continue to be provided after the proposed consolidation. Also, the enclosed map shows the RWSO PWM Area of Responsibility (i.e. ''Affected Service Area'') and the future WFO Portland Area of Responsibility. As discussed below, I find that there will be no degradation in the

quality of these services as a result of the consolidation.

3. A description of the recent or expected modernization of National Weather Service (NWS) operations which will enhance services in the RWSO PWM service area is included as attachment C. The new technology (i.e. ASOC, WSR–88D, and AWIPS) has or will be installed and will enhance services.

4. A map showing planned NEXRAD coverage at an elevation of 10,000 feet for Maine and portions of surrounding areas is included as attachment D. NWS operational radar coverage for the Portland service area will be increased and no area will be missed in coverage.

5. The following evidence, based upon operational demonstration of modernized NWS operations, played a key role in concluding there will be no degradation of service:

A. The WSR–88D RADAR Commissioning Reports from the Portland area, attachment E, validate that the WSR–88Ds meet technical specifications (acceptance test); are fully operational (satisfactory operation of system interfaces and satisfactory support of associated NWS forecasting and warning services); service backup capabilities are functioning properly; a full set of operations and maintenance documentation is available; and spare parts and test equipment and trained operations and maintenance personnel are available on site. Training was completed but two national work-arounds remain in effect.

B. The User Confirmation of Services from Portland, attachment F, document that four negative comments were received. Three of these comments related to the Portland service area. All negative comments have been answered to the satisfaction of the users as reflected in the report.

C. The Decommissioning Readiness Report, attachment G, verifies that the existing Portland WSR–74S radar is no longer needed to support services or products for local office operations.

6. A memorandum assigning the liaison officer for the Portland service area is included at attachment H.

I have considered recommendations of the Modernization Transition Committee (attachment I) and the _____ public comments received during the comment period (attachment J). On _____, the Committee voted to endorse the proposed consolidation (attachment K). I believe all negative comments have been addressed to the satisfaction of our customers and I continue to recommend this certification.

Endorsement

I, John T. Forsing, Director, Eastern Region, endorse this consolidation certification.

John T. Forsing

Attachments

Memorandum For: W/ER—John T. Forsing
From:
Albert W. Wheeler, AM/MIC NWSFO Portland, ME
Robert M. Thompson, AM/MIC NWSFO Boston, MA
Subject: Recommendation for Consolidation Certification

After reviewing the attached documentation, we have determined, in our professional judgment, consolidation of the Concord Weather Service Office (WSO CON) with the future Portland Weather Forecast Office (WFO) and the future Boston WFO, will not result in any degradation in weather services to the Concord service area. This proposed certification is in accordance with the advance notification provided in the National Implementation Plan. Accordingly, we are recommending you approve this action in accordance with section 706 of Public Law 102–567. If you concur, please endorse this recommendation and forward this package to the Assistant Administrator for Weather Services for final certification. If Dr. Friday approves, he will forward the certification to the Secretary for approval and transmittal to Congress.

Our recommendation is based on our review of the pertinent evidence and application of the modernization criteria for consolidation of a field office. In summary:

1.A description of local weather characteristics and weather-related concerns affecting the weather services provided in the Concord service area is included as attachment A. As discussed below, we find that providing the services which address these characteristics and concerns from the future Portland and Boston WFOs will not degrade these services.

2. A detailed list of the services currently provided within the Concord service area from the WSO CON location and a list of services to be provided from the future Portland and Boston WFO locations after the proposed consolidation is included as attachment B. Comparison of these services shows that all services currently provided will continue to be provided after the proposed consolidation. Also, the enclosed map shows the WSO CON Area of Responsibility (i.e. ''Affected Service Area'') and the future WFO Portland Area of Responsibility. As discussed below, I find that there will be no degradation in the quality of these services as a result of the consolidation.

3. A description of the recent or expected modernization of National Weather Service (NWS) operations which will enhance services in the WSO CON service area is included as attachment C. The new technology (i.e. ASOS, WSR–88D, and AWIPS) has or will be installed and will enhance services.

4. A map showing planned NEXRAD coverage at an elevation of 10,000 feet for New Hampshire and portions of surrounding areas is included as attachment D. NWS operational radar coverage for the Concord service area will be increased and no area will be missed in coverage.

5. The following evidence, based upon operational demonstration of modernized NWS operations, played a key role in concluding there will be no degradation of service:

A. The WSR–88D RADAR Commissioning Reports from the Portland and Boston areas, attachment E, validate that the WSR–88Ds meet technical specifications (acceptance test); are fully operational (satisfactory operation of system interfaces and satisfactory support of associated NWS forecasting and warning services); service backup capabilities are functioning properly; a full set of operations and maintenance documentation is available; and spare parts and test equipment and trained operations and maintenance personnel are available on site. Training was completed but two national work-arounds remain in effect.

B. The User Confirmation of Services from Portland and Boston, attachment F, document that four negative comments were received from the Portland area and two negative responses were received for the Boston area. None of the negative comments pertained to the Concord area. All negative comments have been answered to the satisfaction of the users as reflected in the report.

C. The Decommissioning Readiness Report, attachment G, is not required as WSO CON did not have a radar.

6. A memorandum assigning the liaison officer for the Concord service area is included at attachment H.

We have considered recommendations of the Modernization Transition Committee (attachment I) and the _____ public comments received during the comment period (attachment J). On _____, the Committee voted to endorse the proposed consolidation (attachment K). We believe all negative comments have been addressed to the satisfaction of our customers and we continue to recommend this certification.

Endorsement

I, John T. Forsing, Director, Eastern Region, endorse this consolidation certificate.

John T. Forsing

Attachments

Memorandum For: W/ER—John T. Forsing
From: William Comeaux, AM/MIC NWSFO Cleveland, OH
Subject: Recommendation for Consolidation Certification

After reviewing the attached documentation, I have determined, in my professional judgment, consolidation of the Mansfield Weather Service Office (WSO MFD) with the future Cleveland Weather Forecast Office (WFO) will not result in any degradation in weather services to the Mansfield service area. This proposed certification is in accordance with the advance notification provided in the National Implementation Plan. Accordingly, I am recommending you approve this action in accordance with section 706 of Public Law 102–567. If you concur, please endorse this recommendation and forward this package to the Assistant Administrator for Weather Services for final certification. If Dr. Friday approves, he will forward the certification to the Secretary for approval and transmittal to Congress.

My recommendation is based on my review of the pertinent evidence and application of the modernization criteria for consolidation of a field office. In summary:

1. A description of local weather characteristics and weather-related concerns affecting the weather services provided in the Mansfield service area is included as attachment A. As discussed below, I find that

providing the services which address these characteristics and concerns from the future Cleveland WFO will not degrade these services.

2. A detailed list of the services currently provided within the Mansfield service area from the WSO MFD location and a list of services to be provided from the future Cleveland WFO location after the proposed consolidation is included as attachment B. Comparison of these services shows that all services currently provided will continue to be provided after the proposed consolidation. Also, the enclosed map shows the WSO MFD Area of Responsibility (i.e. ''Affected Service Area'') and the future WFO Cleveland Area of Responsibility. As discussed below, I find that there will be no degradation in the quality of these services as a result of the consolidation.

3. A description of the recent or expected modernization of National Weather Service (NWS) operations which will enhance services in the WSO MFD service area is included as attachment C. The new technology (i.e. ASOC, WSR–88D, and AWIPS) has or will be installed and will enhance services.

4. A map showing planned NEXRAD coverage at an elevation of 10,000 feet for Ohio and portions of surrounding areas is included as attachment D. NWS operational radar coverage for the Mansfield service area will be increased and no area will be missed in coverage.

5. The following evidence, based upon operational demonstration of modernized NWS operations, played a key role in concluding there will be no degradation of service:

A. The WSR–88D RADAR Commissioning Reports from the Cleveland area, attachment E, validate that the WSR–88Ds meet technical specifications (acceptance test); are fully operational (satisfactory operation of system interfaces and satisfactory support of associated NWS forecasting and warning services); service backup capabilities are functioning properly; a full set of operations and maintenance documentation is available; and spare parts and test equipment and trained operations and maintenance personnel are available on site. Training was completed but two national work-arounds remain in effect.

B. The User Confirmation of Services from Cleveland, attachment F, document that seven responses required full-up. All negative comments have been answered to the satisfaction of the users as reflected in the report.

C. The Decommissioning Readiness Report, attachment G, is not needed as WSO MFD does not have a radar.

6. A memorandum assigning the liaison officer for the Mansfield service area is included at attachment H.

I have considered recommendations of the Modernization Transition Committee (attachment I) and the _____ public comments received during the comment period (attachment J). On _____, the Committee voted to endorse the proposed consolidation (attachment K). I believe all negative comments have been addressed to the satisfaction of our customers and I continue to recommend this certification.

Endorsement

I, John T. Forsing, Director, Eastern Region, endorse this consolidation certification.

John T. Forsing,

Attachments

Memorandum For: W/ER—John T. Forsing
From:
William Comeaux, AM/MIC NWSFO Cleveland, OH
Theresa Rossi, AM/MIC NWSFO Pittsburgh, PA
Subject: Recommendation for Consolidation Certification

After reviewing the attached documentation, we have determined in our professional judgment, consolidation of the Youngstown Weather Service Office (WSO YNG) with the future Cleveland and Pittsburgh Weather Forecast Offices (WFOs) will not result in any degradation in weather services to the Youngstown service area. This proposed certification is in accordance with the advance notification provided in the National Implementation Plan. Accordingly, we are recommending you approve this action in accordance with section 706 of Public Law 102–567. If you concur, please endorse this recommendation and forward this package to the Assistant Administrator for Weather Services for final certification. If Dr. Friday approves, he will forward the certification to the Secretary for approval and transmittal to Congress.

Our recommendation is based on our review of the pertinent evidence and application of the modernization criteria for consolidation of a field office. In summary.

1. A description of local weather characteristics and weather-related concerns affecting the weather services provided in the Youngstown service area is included as attachment A. As discussed below, we find that providing the services which address these characteristics and concerns from the future Cleveland and Pittsburgh WFOs, will not degrade these services.

2. A detailed list of services currently provided within the Youngstown service area from the WSO YNG location and list of services to be provided from the future Cleveland and Pittsburgh WFOs locations after the proposed consolidation is included as attachment B. Comparison of these services shows that all services currently provided will continue to be provided after the proposed consolidation. Also, the enclosed map shows the WSO YNG Area of Responsibility (i.e. ''Affected Service Area'') and the future WFO Cleveland Area of Responsibility. As discussed below, we find that there will be no degradation in the quality of these services as a result of the consolidation.

3. A description of the recent or expected modernization of National Weather Service (NWS) operations which will enhance services in the WSO YNG service area is included as attachment C. The new technology (i.e. ASOS, WSR–88D, and AWIPS) has or will be installed and will enhance services.

4. A map showing planned NEXRAD coverage at an elevation of 10,000 feet for Ohio and portions of surrounding areas is included as attachment D. NWS operational radar coverage for the Youngstown service area will be increased and no area will be missed in coverage.

5. The following evidence, based upon operational demonstration of modernized NWS operations, played a key role in concluding there will be no degradation of service.

A. The WSR–88D RADAR Commissioning Report from the Cleveland and Pittsburgh areas, attachment E. validate that the WSR–88Ds meet technical specifications (acceptance test); are fully operational (satisfactory operation of system interfaces and satisfactory support of associated NWS forecasting and warning services); service backup capabilities are functioning properly; a full set of operations and maintenance documentation is available; and spare parts and test equipment and trained operations and maintenance personnel are available on site. Training was completed but two national work-arounds remain in effect.

B. The User Confirmation of Services from the future Cleveland and Pittsburgh WFO areas, attachment F, document that a total of 10 comments required follow-up. All negative comments have been answered to the satisfaction of the users as reflected in the report.

C. The Decommissioning Readiness Report, attachment G, is not necessary since WSO YNG does not have a radar.

6. A memorandum assigning the liaison officer for the Youngstown service area in included at attachment H.

We have considered recommendations of the Modernization Transition Committee (attachment I) and the _____, public comments received during the comment period (attachment J). On _____ the Committee voted to endorse the proposed consolidation (attachment K). We believe all negative comments have been addressed to the satisfaction of our customers and we continue to recommend this certification.

Endorsement

I, John T. Forsing, Director, Eastern Region, endorse this consolidation certification.

John T. Forsing,

Attachments

Memorandum For: W/ER—John T. Forsing
From: Kenneth J. Haydu, MIC NWSO Cincinnati, OH
Subject: Recommendation for Consolidation Certification

After reviewing the attached documentation, I have determined, in my professional judgement, consolidation of the Dayton Weather Service Office (WSO DAY) with the future Cincinnati Weather Forecast Office (WFO) will not result in any degradation in weather services to the Dayton service area. This proposed certification is in accordance with the advance notification provided in the National Implementation Plan. Accordingly, I am recommending you approve this action in accordance with section 706 of Public Law 102–567. If you concur, please endorse this recommendation and forward this package to the Assistant Administrator for Weather Services for final certification. If Dr. Friday approves, he will forward the certification to the Secretary for approval and transmittal to Congress.

Our recommendation is based on our review of the pertinent evidence and application of the modernization criteria for consolidation of a field office. In summary:

1. A description of local weather characteristics and weather-related concerns affecting the weather services provided in the Dayton service area is included as attachment A. As discussed below, I find that providing the services which address these characteristics and concerns from the future Cincinnati WFO, will not degrade these services.

2. A detailed list of the services currently provided within the Dayton service area from the WSO DAY location and list of services to be provided from the future Cincinnati WFO locations after the proposed consolidation is included as attachment B. Comparison of these services shows that all services currently provided will continue to be provided after the proposed consolidation. Also, the enclosed map shows the WSO DAY Area of Responsibility (i.e. ''Affected Service Area'') and the future WFO Cincinnati Area of Responsibility. As discussed below, I find that there will be no degradation in the quality of these services as a result of the consolidation.

3. A description of the recent or expected modernization of National Weather Service (NWS) operations which will enhance services in the WSO DAY service area is included as attachment C. The new technology (i.e. ASOS, WSR–88D, and AWIPS) has or will be installed and will enhance services.

4. A map showing planned NEXRAD coverage at an elevation of 10,000 feet for Ohio and portions of surrounding areas is included as attachment D. NWS operational radar coverage for the Dayton service area will be increased and no area will be missed in coverage.

5. The following evidence, based upon operational demonstration of modernized NWS operations, played a key role in concluding there will be no degradation of service:

A. The WSR–88D RADAR Commissioning Report from the Cincinnati areas, attachment E, validate that the WSR–88Ds meet technical specifications (acceptance test); are fully operational (satisfactory operation of system interfaces and satisfactory support of associated NWS forecasting and warning services); service backup capabilities are functioning properly; a full set of operations and maintenance documentation is available; and spare parts and test equipment and trained operations and maintenance personnel are available on site. Training was completed but two national work-arounds remain in effect.

B. The User Confirmation of Services from the future Cincinnati WFO areas, attachment F, document that four comments required follow-up. All negative comments have been answered to the satisfaction of the users as reflected in the report.

C. The Decommissioning Readiness Report, attachment G, is not needed as WSO DAY does not have radar.

6. A memorandum assigning the liaison officer for the Dayton service area is included at attachment H.

I have considered recommendations of the Modernization Transition Committee (attachment I) and the _____ public comments received during the comment period (attachment J). On _____, the Committee voted to endorse the proposed consolidation (attachment K). I believe all negative comments have been addressed to the satisfaction of our customers and I continue to recommend this certification.

Endorsement

I, John T. Forsing, Director, Eastern Region, endorse this consolidation certification.

John T. Forsing,

Attachments

Memorandum For: W/ER—John T. Forsing
From:
William Comeaux, AM/MIC NWSFO Cleveland, OH
Kenneth J. Haydu, MIC NWSO Cincinnati, OH
Subject: Recommendation for Consolidation Certification

After reviewing the attached documentation, we have determined, in our professional judgement, consolidation of the Toledo Weather Service Office (WSO TOL) with the future Cincinnati and Cleveland Weather Forecast Offices (WFOs) will not result in any degradation in weather services to the Toledo service area. This proposed certification is in accordance with the advance notification provided in the National Implementation Plan. Accordingly, we are recommending you approve this action in accordance with section 706 of Public Law 102–567. If you concur, please endorse this recommendation and forward this package to the Assistant Administrator for Weather Services for final certification. If Dr. Friday approves, he will forward the certification to the Secretary for approval and transmittal to Congress.

Our recommendation is based on our review of the pertinent evidence and application of the modernization criteria for consolidation of a field office. In summary:

1. A description of local weather characteristics and weather-related concerns affecting the weather services provided in the Toledo service area is included as attachment A. As discussed below, we find that providing the services which address these characteristics and concerns from the future Cincinnati and Cleveland WFOs will not degrade these services.

2. A detailed list of the services currently provided within the Toledo service area from the WSO TOL location and list of services to be provided from the future Cincinnati and Cleveland WFO locations after the proposed consolidation is included as attachment B. Comparison of these services shows that all services currently provided will continue to be provided after the proposed consolidation. Also, the enclosed map shows the WSO TOL Area of Responsibility (i.e. ''Affected Service Area'') and the future WFO Cleveland Area of Responsibility. As discussed below, we find that there will be no degradation in the quality of these services as a result of the consolidation.

3. A description of the recent or expected modernization of National Weather Service (NWS) operations which will enhance services in the WSO TOL service area is included as attachment C. The new technology (i.e. ASOS, WSR–88D, and AWIPS) has or will be installed and will enhance services.

4. A map showing planned NEXRAD coverage at an elevation of 10,000 feet for Ohio and portions of surrounding areas is included as attachment D. NWS operational radar coverage for the Toledo service area will be increased and no area will be missed in coverage.

5. The following evidence, based upon operational demonstration of modernized NWS operations, played a key role in concluding there will be no degradation of service:

A. The WSR–88D RADAR Commissioning Reports from Cincinnati and Cleveland areas, attachment E, validate that the WSR–88Ds meet technical specifications (acceptance test); are fully operational (satisfactory operation of system interfaces and satisfactory support of associated NWS forecasting and warning services); service backup capabilities are functioning properly; a full set of operations and maintenance documentation is available; and spare parts and test equipment and trained operations and maintenance personnel are available on site. Training was completed but two national work-arounds remain in effect.

B. The User Confirmation of Services from the future Cincinnati and Cleveland WFO areas, attachment F, document that a total of 11 comments required follow-up. All negative comments have been answered to the satisfaction of the users as reflected in the report.

C. The Decommissioning Readiness Report, attachment G, is not necessary since WSO TOL does not have a radar.

6. A memorandum assigning the liaison officer for the Toledo service area is included at attachment H.

I have considered recommendations of the Modernization Transition Committee (attachment I) and the _____ public comments received during the comment period (attachment J). On _____, the Committee voted to endorse the proposed consolidation (attachment K). I believe all negative comments have been addressed to the satisfaction of our customers and I continue to recommend this certification.

Endorsement

I, John T. Forsing, Director, Eastern Region, endorse this consolidation certification.

John T. Forsing,

Attachments

Memorandum For: W/ER—John T. Forsing
From: John V. Wright, MIC NWSO Roanoke, VA
Subject: Recommendation for Consolidation Certification

After reviewing the attached documentation, I have determined, in my professional judgment, consolidation of the Lynchburg Weather Service Office (WSO LYH) with the future Roanoke Weather Forecast Office (WFO) will not result in any degradation in weather services to the Lynchburg service area. This proposed

certification is in accordance with the advance notification provided in the National Implementation Plan. Accordingly, I am recommending you approve this action in accordance with section 706 of Public Law 102–567. If you concur, please endorse this recommendation and forward this package to the Assistant Administrator for Weather Services for final certification. If Dr. Friday approves, he will forward the certification to the Secretary for approval and transmittal to Congress.

My recommendation is based on my review of the pertinent evidence and application of the modernization criteria for consolidation of a field office. In summary:

1. A description of local weather characteristics and weather-related concerns affecting the weather services provided in the Lynchburg service area is included as attachment A. As discussed below, I find that providing the services which address these characteristics and concerns from the future Roanoke WFO will not degrade these services.

2. A detailed list of the services currently provided within the Lynchburg service area from the WSO LYH location and a list of services to be provided from the future Roanoke WFO location after the proposed consolidation is included in attachment B. Comparison of these services shows that all services currently provided will continue to be provided after the proposed consolidation. Also, the enclosed map shows the WSO Lynchburg Area of Responsibility (i.e. ''Affected Service Area'') and the future WFO Roanoke Area of Responsibility. As discussed below, I find that there will be no degradation in the quality of these services as a result of the consolidation.

3. A description of the recent or expected modernization of National Weather Service (NWS) operations which will enhance services in the WSO LYH service area is included as attachment C. The new technology (i.e. ASOS, WSR–88D, and AWIPS) has or will be installed and will enhance services.

4. A map showing planned NEXRAD coverage at an elevation of 10,000 feet for Virginia and portions of surrounding areas is included as attachment D. NWS operational radar coverage for the Lynchburg service area will be increased and no area will be missed in coverage.

5. The following evidence, based upon operational demonstration of modernized NWS operations, played a key role in concluding there will be no degradation of service:

A. The WSR–88D RADAR Commissioning Reports from the Roanoke area, attachment E, validate that the WSR–88Ds meet technical specifications (acceptance test); are fully operational (satisfactory operation of system interfaces and satisfactory support of associated NWS forecasting and warning services); service backup capabilities are functioning properly; a full set of operations and maintenance documentation is available; and spare parts and test equipment and trained operations and maintenance personnel are available on site. Training was completed but two national work-arounds remain in effect.

B. The User Confirmation of Services from the future Roanoke WFO area, attachment F, document that seven comments required follow-up. All negative comments have been answered to the satisfaction of the users as reflected in the report.

C. The Decommissioning Readiness Report, attachment G, is not needed as WSO LYH does not have a radar.

6. A memorandum assigning the liaison officer for the Lynchburg service area is included at attachment H.

I have considered recommendations of the Modernization Transition Committee (attachment I) and the _____ public comments received during the comment period (attachment J). On _____, the Committee voted to endorse the proposed consolidation (attachment K). I believe all negative comments have been addressed to the satisfaction of our customers and I continue to recommend this certification.

Endorsement

I, John T. Forsing, Director, Eastern Region, endorse this consolidation certification.

John T. Forsing,

Attachments

Memorandum For: W/ER—John T. Forsing
From: John V. Wright, MIC NWSO Roanoke, VA
Subject: Recommendation for Consolidation Certification

After reviewing the attached documentation, I have determined, in my professional judgement, consolidation of the Roanoke Weather Service Office (WSO ROA) with the future Roanoke Weather Forecast Office (WFO) will not result in any degradation in weather services to the Roanoke service area. This proposed certification is in accordance with the advance notification provided in the National Implementation Plan. Accordingly, I am recommending you approve this action in accordance with section 706 of Public Law 102–567. If you concur, please endorse this recommendation and forward this package to the Assistant Administrator for Weather Services for final certification. If Dr. Friday approves, he will forward the certification to the Secretary for approval and transmittal to Congress.

My recommendation is based on my review of the pertinent evidence and application of the modernization criteria for consolidation of a field office. In summary:

1. A description of local weather characteristics and weather-related concerns affecting the weather services provided in the Roanoke service area is included as attachment A. As discussed below, I find that providing the services which address these characteristics and concerns from the future Roanoke WFO will not degrade these services.

2. A detailed list of the services currently provided within the Roanoke service area from the WSO ROA location and a list of services to be provided from the future Roanoke WFO location after the proposed consolidation is included as attachment B. Comparison of these services shows that all services currently provided will continue to be provided after the proposed consolidation. Also, the enclosed map shows the WSO ROA Area of Responsibility (i.e. ''Affected Service Area'') and the future WFO Roanoke Area of Responsibility. As discussed below, I find that there will be no degradation in the quality of these services as a result of the consolidation.

3. A description of the recent or expected modernization of National Weather Service (NWS) operations which will enhance services in the WSO ROA service area is included as attachment C. The new technology (i.e. ASOS, WSR–88D, and AWIPS) has or will be installed and will enhance services.

4. A map showing planned NEXRAD coverage at an elevation of 10,000 feet for Virginia and portions of surrounding areas is included as attachment D. NWS operational radar coverage for the Roanoke service area will be increased and no area will be missed in coverage.

5. The following evidence, based upon operational demonstration of modernized NWS operations, played a key role in concluding there will be no degradation of service:

A. The WSR–88D RADAR Commissioning Reports from the Roanoke area, attachment E, validate that the WSR–88Ds meet technical specifications (acceptance test); are fully operational (satisfactory operation of system interfaces and satisfactory support of associated NWS forecasting and warning services); service backup capabilities are functioning properly; a full set of operations and maintenance documentation is available; and spare parts and test equipment and trained operations and maintenance personnel are available on site. Training was completed but two national work-arounds remain in effect.

B. The User Confirmation of Services from the future Roanoke WFO area, attachment F, document that seven responses required follow-up. All negative comments have been answered to the satisfaction of the users as reflected in the report.

C. The Decommissioning Readiness Report, attachment G, is not needed as WSO ROA does not have a radar.

6. A memorandum assigning the liaison officer for the Roanoke service area is included at attachment H.

I have considered recommendations of the Modernization Transition Committee (attachment I) and the _____ public comments received during the comment period (attachment J). On _____, the Committee voted to endorse the proposed consolidation (attachment K). I believe all negative comments have been addressed to the satisfaction of our customers and I continue to recommend this certification.

Endorsement

I, John T. Forsing, Director, Eastern Region, endorse this consolidation certification.

John T. Forsing,

Attachments

Memorandum For: W/ER—John T. Forsing
From:
Thomas E. Kriehn, MIC NWSO Morehead City, NC

Anthony L. Siebers, MIC MWSO
Wakefield, VA
Subject: Recommendation for Consolidation Certification

After reviewing the attached documentation, we have determined, in our professional judgement, consolidation of the Weather Service Office Cape Hatteras, NC (WSO HAT) with the future Weather Forecast Offices (WFOs) Morehead City, NC and Wakefield, VA, will not result in any degradation in weather services to the Cape Hatteras service area. This proposed certification is in accordance with the advance notification provided in the National Implementation Plan. Accordingly, we are recommending you approve this action in accordance with section 706 of Public Law 102–567. If you concur, please endorse this recommendation and forward this package to the Assistant Administrator for Weather Services for final certification. If Dr. Friday approves, he will forward the certification to the Secretary for approval and transmittal to Congress.

Our recommendation is based on our review of the pertinent evidence and application of the modernization criteria for consolidation of a field office. In summary:

1. A description of local weather characteristics and weather-related concerns affecting the weather services provided in the Cape Hatteras service area is included as attachment A. As discussed below, I find that providing the services which address these characteristics and concerns from the future Morehead City and Wakefield WFOs will not degrade these services.

2. A detailed list of the services currently provided within the Cape Hatteras service area from the WSO HAT location and a list of services to be provided from the future Morehead City and Wakefield WFO locations after the proposed consolidation is included as attachment B. Comparison of these services shows that all services currently provided will continue to be provided after the proposed consolidation. Also, the enclosed map shows the WSO HAT Area of Responsibility (i.e. ''Affected Service Area'') and the future Morehead City WFO Area of Responsibility. As discussed below, we find that there will be no degradation in the quality of these services as a result of the consolidation.

3. A description of the recent or expected modernization of National Weather Service (NWS) operations which will enhance services in the WSO HAT service area is included as attachment C. The new technology (i.e. ASOS, WSR–88D, and AWIPS) has or will be installed and will enhance services.

4. A map showing planned NEXRAD coverage at an elevation of 10,000 feet for North Carolina and portions of surrounding areas is included as attachment D. NWS operational radar coverage for the WSO HAT service area will be increased and no area will be missed in coverage.

5. The following evidence, based upon operational demonstration of modernized NWS operations, played a key role in concluding there will be no degradation of service:

A. The WSR–88D RADAR Commissioning Reports from Morehead City and Wakefield, attachment E validate that the WSR–88Ds meet technical specifications (acceptance test); are fully operational (satisfactory operation of system interfaces and satisfactory support of associated NWS forecasting and warning services); service backup capabilities are functioning properly; a full set of operations and maintenance documentation is available; and spare parts and test equipment and trained operations and maintenance personnel are available on site. Training was completed but two national work-arounds remain in effect.

B. The User Confirmation of Services from Morehead City and Wakefield, attachment F, document that a total of five negative comments were received for both offices. All negative comments have been answered to the satisfaction of the users as reflected in the reports.

C. The Decommissioning Readiness Report, attachment G, verifies that the existing WSO HAT WSR–57 radar is no longer needed to support services or products for local office operations.

6. A memorandum assigning the liaison officer for the Cape Hatteras service area is included at attachment H.

I have considered recommendations of the Modernization Transition Committee (attachment I) and the _____ public comments received during the comment period (attachment J). On _____, the Committee voted to endorse the proposed consolidation (attachment K). I believe all negative comments have been addressed to the satisfaction of our customers and I continue to recommend this certification.

Endorsement

I, John T. Forsing, Director, Eastern Region, endorse this consolidation certification.

John T. Forsing,

Attachments

Memorandum For: W/ER—John T. Forsing
From:
William Comeaux, AM/MIC NWSFO
Cleveland, OH
Theresa Rossi, AM/MIC NWSFO
Pittsburgh, PA
Alan Rezek, AM/MIC NWSFO Charleston, WV
Subject: Recommendation for Consolidation Certification

After reviewing the attached documentation, we have determined, in our professional judgement, consolidation of the Akron Weather Service Office (WSO CAK) with the future Cleveland, Pittsburgh, and Charleston Weather Forecast Offices (WFOs) will not result in any degradation in weather services to the Akron service area. This proposed certification is in accordance with the advance notification provided in the National Implementation Plan. Accordingly, we are recommending you approve this action in accordance with section 706 of Public Law 102–567. If you concur, please endorse this recommendation and forward this package to the Assistant Administrator for Weather Services for final certification. If Dr. Friday approves, he will forward the certification to the Secretary for approval and transmittal to Congress.

Our recommendation is based on our review of the pertinent evidence and application of the modernization criteria for consolidation of a field office. In summary:

1. A description of local weather characteristics and weather-related concerns affecting the weather services provided in the Akron service area is included as attachment A. As discussed below, we find that providing the services which address these characteristics and concerns from the future Cleveland, Pittsburgh and Charleston WFOs, will not degrade these services.

2. A detailed list of the services currently provided within the Akron service area from the WSO CAK location and list of services to be provided from the future Cleveland, Pittsburgh, and Charleston WFO locations after the proposed consolidation is included as attachment B. Comparison of these services shows that all services currently provided will continue to be provided after the proposed consolidation. Also, the enclosed map shows the WSO CAK Area of Responsibility (i.e. ''Affected Service Area'') and the future WFO Cleveland Area of Responsibility. As discussed below, I find that there will be no degradation in the quality of these services as a result of the consolidation.

3. A description of the recent or expected modernization of National Weather Service (NWS) operations which will enhance services in the WSO CAK service area is included as attachment C. The new technology (i.e. ASOS, WSR–88D, and AWIPS) has or will be installed and will enhance services.

4. A map showing planned NEXRAD coverage at an elevation of 10,000 feet for Ohio and portions of surrounding areas is included as attachment D. NWS operational radar coverage for the Akron service area will be increased and no area will be missed in coverage.

5. The following evidence, based upon operational demonstration of modernized NWS operations, played a key role in concluding there will be no degradation of service:

A. The WSR–88D RADAR Commissioning Reports for the Cleveland, Pittsburgh, and Charleston area radars, attachment E, validate that the WSR–88Ds meet technical specifications (acceptance test); are fully operational (satisfactory operation of system interfaces and satisfactory support of associated NWS forecasting and warning services); service backup capabilities are functioning properly; a full set of operations and maintenance documentation is available; and spare parts and test equipment and trained operations and maintenance personnel are available on site. Training was completed but two national work-arounds remain in effect.

B. The User Confirmation of Services from the future Cleveland, Pittsburgh, and Charleston WFOs, attachment F, document that a total of 14 comments required follow-up. All negative comments have been answered to the satisfaction of the users as reflected in the reports.

C. The Decommissioning Readiness Report, attachment G, verifies that the existing Akron local warning radar, WSR–74C, is no longer needed to support services or products for local office operations.

6. A memorandum assigning the liaison officer for the Akron service area is included at attachment H.

We have considered recommendations of the Modernization Transition Committee (attachment I) and the _____ public comments received during the comment period (attachment J). On _____, the Committee voted to endorse the proposed consolidation (attachment K). We believe all negative comments have been addressed to the satisfaction of our customers and we continue to recommend this certification.

Endorsement

I, John T. Forsing, Director, Eastern Region, endorse this consolidation certification.

John T. Forsing,

Attachments

Memorandum For: W/ER—John T. Forsing
From:
Kenneth J. Haydu, MIC NWSO Cincinnati, OH
William Comeaux, AM/MIC NWSFO Cleveland, OH
Theresa Rossi, AM/MIC NWSFO Pittsburgh, PA
Alan Rezek, AM/MIC NWSFO Charleston, WV
Subject: Recommendation for Consolidation Certification

After reviewing the attached documentation, we have determined, in our professional judgment, consolidation of the Columbus Weather Service Office (WSO CMH) with the future Cincinnati, Cleveland, Pittsburgh and Charleston Weather Forecast Offices (WFOs) will not result in any degradation in weather services to the Columbus service area. This proposed certification is in accordance with the advance notification provided in the National Implementation Plan. Accordingly, we are recommending you approve this action in accordance with section 706 of Public Law 102–567. If you concur, please endorse this recommendation and forward this package to the Assistant Administrator for Weather Services for final certification. If Dr. Friday approves, he will forward the certification to the Secretary for approval and transmittal to Congress.

Our recommendation is based on our review of the pertinent evidence and application of the modernization criteria for consolidation of a field office. In summary:

1. A description of local weather characteristics and weather-related concerns affecting the weather services provided in the Columbus service area is included as attachment A. As discussed below, we find that providing the services which address these characteristics and concerns from the future Cincinnati, Cleveland, Pittsburgh and Charleston WFOs, will not degrade these services.

2. A detailed list of the services currently provided within the Columbus service area from the WSO CMH location and list of services to be provided from the future Cincinnati Area, Cleveland Area, Pittsburgh Area and Charleston Area WFOs locations after the proposed consolidation is included as attachment B. Comparison of these services shows that all services currently provided will continue to be provided after the proposed consolidation. Also, the enclosed map shows the WSO CMH Area of Responsibility (i.e. ''Affected Service Area'') and the future WFO Cincinnati Area of Responsibility. As discussed below, we find that there will be no degradation in the quality of these services as a result of the consolidation.

3. A description of the recent or expected modernization of National Weather Service (NWS) operations which will enhance services in the WSO CMH service area is included as attachment C. The new technology (i.e. ASOS, WSR–88D, and AWIPS) has or will be installed and will enhance services.

4. A map showing planed NEXRAD coverage at an elevation of 10,000 feet for Ohio and portions of surrounding areas is included as attachment D. NWS operational radar coverage for the Columbus service area will be increased and no area will be missed in coverage.

5. The following evidence, based upon operational demonstration of modernized NWS operations, played a key role in concluding there will be no degradation of service:

A. The WSR–88D RADAR Commissioning Reports from the Cincinnati, Cleveland, Pittsburgh and Charleston areas attachment E, validate that the WSR–88Ds meet technical specifications (acceptance test); are fully operational (satisfactory operation of system interfaces and satisfactory support of associated NWS forcasting and warning services); service backup capabilities are functioning properly; a full set of operations and maintenance documentation is available; and spare parts and test equipment and trained operations and maintenance personnel are available on site. Training was completed but two national work-arounds remain in effect.

B. The User Confirmation of Services from the future Cincinnati, Cleveland, Pittsburgh and Charleston WFOs area, attachment F, document that a total of 18 comments required follow-up. All negative comments have been answered to the satisfaction of the users as reflected in the report.

C. The Decommissioning Readiness Report, attachment G, verifies that the exiting Columbus local warning radar, WSR–74C, is no longer needed to support services or products for local office operations.

6. A memorandum assigning the liaison officer for the Columbus service area is included at attachment H.

We have considered recommendations of the Modernization Transition Committee (attachment I) and the _____ public comments received during the comment period (attachment J). On _____, the Committee voted to endorse the proposed consolidation (attachment K). We believe all negative comments have been addressed to the satisfaction of our customers and we continue to recommend this certification.

Endorsement

I, John T. Forsing, Director, Eastern Region, endorse this consolidation certifcation.

John T. Forsing,

Attachments

Memorandum for: W/ER—John T. Forsing
From: Bruce W. Budd, MIC NWSO Central Pennsylvania, PA
Subject: Recommendation for Consolidation Certification

After reviewing the attached documentation, I have determined, in my professional judgment, consolidation of the Harrisburg Weather Service Office (WSO HRCP1) with the future Central Pennsylvania Weather Forecast Office (WFO) will not result in any degradation in weather services to the Harrisburg service area. This proposed certification is in accordance with the advance notification provided in the National Implementation Plan. Accordingly, I am recommending you approve this action in accordance with section 706 of Public Law 102–567. If you concur, please endorse this recommendation and forward this package to the Assistant Administrator for Weather Services for final certification. If Dr. Friday approves, he will forward the certification to the Secretary for approval and transmittal to Congress.

My recommendation is based on my review of the pertinent evidence and application of the modernization criteria for consolidation of a field office. In summary:

1. A description of local weather characteristics and weather-related concerns affecting the weather services provided in the Harrisburg service area is included as attachment A. As discussed below, I find that providing the services which address these characteristics and concerns from the future Central Pennsylvania WFO will not degrade these services.

2. A detailed list of the services currently provided within the Harrisburg service area from the WSO HRCP1 location and a list of services to be provided from the future Central Pennsylvania WFO location after the proposed consolidation is included as attachment B. Comparison of these services shows that all services currently provided will continue to be provided after the proposed consolidation. Also, the enclosed map shows the WSO HRCP1 Area of Responsibility (i.e. ''Affected Service Area'') and the future WFO Central Pennsylvania Area of Responsibility. As discussed below, I find that there will be no degradation in the quality of these services as a result of the consolidation.

3. A description of the recent or expected modernization of National Weather Service (NWS) operations which will enhance services in the WSO HRCP1 service area is included as attachment C. The new technology (i.e. ASOS, WSR–88D, and AWIPS) has or will be installed and will enhance services.

4. A map showing planned NEXRAD coverage at an elevation of 10,000 feet for Pennsylvania and portions of surrounding areas is included as attachment D. NWS operational radar coverage for the Harrisburg service area will be increased and no area will be missed in coverage.

5. The following evidence, based upon operational demonstration of modernized NWS operations, played a key role in concluding there will be no degradation of service:

A. The WSR–88D RADAR Commissioning Report from the Central Pennsylvania area, attachment E, validate that the WSR–88Ds meet technical specifications (acceptance test); are fully operational (satisfactory operation of system interfaces and satisfactory support of associated NWS forecasting and warning services); service backup capabilities are functioning properly; a full set of operations and maintenance documentation is available; and spare parts and test equipment and trained operations and maintenance personnel are available on site. Training was completed but two national work-arounds remain in effect.

B. The User Confirmation of Services from the future Central Pennsylvania WFO area, attachment F, document that three comments required follow-up. All negative comments have been answered to the satisfaction of the users as reflected in the report.

C. The Decommissioning Readiness Report, attachment G, verifies that the existing Harrisburg local warning radar, WSR–76C, is no longer needed to support services or products for local office operations.

6. A memorandum assigning the liaison officer for the Harrisburg service area is included at attachment H.

I have considered recommendations of the Modernization Transition Committee (attachment I) and the _____ public comments received during the comment period (attachment J). On _____, the Committee voted to endorse the proposed consolidation (attachment K). I believe all negative comments have been addressed to the satisfaction of our customers and I continue to recommend this certification.

Endorsement

I, John T. Forsing, Director, Eastern Region, endorse this consolidation certification.

John T. Forsing,

Attachments

Memorandum for: W/ER—John T. Forsing
From:
Bruce W. Budd, MIC NWSO Central Pennsylvania, PA
Peter R. Ahnert, MIC NWSO Binghamton, NY
Subject: Recommendation for Consolidation Certification

After reviewing the attached documentation, we have determined, in our professional judgment, consolidation of the Williamsport Weather Service Office (WSO IPT) with the future Central Pennsylvania and Binghampton Weather Forecast Office (WFO) will not result in any degradation in weather services to the Williamsport service area. This proposed certification is in accordance with the advance notification provided in the National Implementation Plan. Accordingly, we are recommending you approve this action in accordance with section 706 of Public Law 102–567. If you concur, please endorse this recommendation and forward this package to the Assistant Administrator for Weather Services for final certification. If Dr. Friday approves, he will forward the certification to the Secretary for approval and transmittal to Congress.

Our recommendation is based on our review of the pertinent evidence and application of the modernization criteria for consolidation of a field office. In summary:

1. A description of local weather characteristics and weather-related concerns affecting the weather services provided in the Williamsport service area is included as attachment A. As discussed below, we find that providing the services which address these characteristics and concerns from the future Central Pennsylvania and Binghampton Area WFOs will not degrade these services.

2. A detailed list of the services currently provided within the Williamsport service area from the WSO IPT location and a list of services to be provided from the future Centrall Pennsylvania and Binghamton area WFOs locations after the proposed consolidation is included as attachment B. Comparison of these services shows that all services currently provided will continue to be provided after the proposed consolidation. Also, the enclosed map shows the WSO IPT Area of Responsibility (i.e. ''Affected Service Area'') and the future WFO Central Pennsylvania Area of Responsibility. As discussed below, I find that there will be no degradation in the quality of these services as a result of the consolidation.

3. A description of the recent or expected modernization of National Weather Service (NWS) operations which will enhance services in the WSO IPT service area is included as attachment C. The new technology (i.e. ASOS, WSR–88D, and AWIPS) has or will be installed and will enhance services.

4. A map showing planned NEXRAD coverage at an elevation of 10,000 feet for Pennsylvania and portions of surrounding areas is included as attachment D. NWS operational radar coverage for the Williamsport service area will be increased and no area will be missed in coverage.

5. The following evidence, based upon operational demonstration of modernized NWS operations, played a key role in concluding there will be no degradation of service:

A. The WSR–88D RADAR Commissioning Report from the Central Pennsylvania and Binghamton areas, attachment E, validate that the WSR–88Ds meet technical specifications (acceptance test); are fully operational (satisfactory operation of system interfaces and satisfactory support of associated NWS forecasting and warning services); service backup capabilities are functioning properly; a full set of operations and maintenance documentation is available; and spare parts and test equipment and trained operations and maintenance personnel are available on site. Training was completed but two national work-arounds remain in effect.

B. The User Confirmation of Services from the future Central Pennsylvania and Binghampton WFOs areas, attachment F, document that five comments required follow-up. All negative comments have been answered to the satisfaction of the users as reflected in the report.

C. The Decommissioning Readiness Report, attachment G, is not necessary since WSO IPT does not have a radar.

6. A memorandum assigning the liaison officer for the Williamsport service area is included at attachment H.

I have considered recommendations of the Modernization Transition Committee (attachment I) and the _____ public comments received during the comment period (attachment J). On _____, the Committee voted to endorse the proposed consolidation (attachment K). I believe all negative comments have been addressed to the satisfaction of our customers and I continue to recommend this certification.

Endorsement

I, John T. Forsing, Director, Eastern Region, endorse this consolidation certification.

John T. Forsing

Attachments

[FR Doc. 96–3380 Filed 2–13–95; 8:45 am]

BILLING CODE 3510–12–M

[I.D. 020796A]

Permits; Foreign Fishing

In accordance with a memorandum of understanding with the Secretary of State, the National Marine Fisheries Service publishes for public review and comment summaries of applications received by the Secretary of State requesting permits for foreign fishing vessels to operate in the Exclusive Economic Zone under provisions of the Magnuson Fishery Conservation and Management Act (Magnuson Act, 16 U.S.C. 1801 *et seq.*). This notice concerns the receipt of an application from the Government of the Russian Federation requesting authorization to conduct a joint venture in the Northwest Atlantic Ocean for Atlantic sea herring and Atlantic mackerel. The large stern trawlers DAURIYA, NADIR and NOVATOR, and the factoryship SERGEY VASILISIN, are identified as the vessels that will receive sea herring and mackerel from U.S. vessels. Send comments on this application to:

NOAA - National Marine Fisheries Service
Office of Fisheries Conservation and Management
1315 East-West Highway
Silver Spring, MD 20910
and/or, to one or both of the Regional Fishery Management
Councils listed below:

Douglas G. Marshall, Executive Director
New England Fishery Management Council
5 Broadway
Saugus, MA 01906
617/231–0422
David R. Keifer, Executive Director

Mid-Atlantic Fishery Management Council

Federal Building, Room 2115

300 South New Street

Dover, DE 19901–6790

302/674–2331

For further information contact Robert A. Dickinson, Office of Fisheries Conservation and Management, (301) 713–2337.

Dated: February 7, 1996.

Richard W. Surdi,

Acting Director, Office of Fisheries Conservation and Management, National Marine Fisheries Service.

[FR Doc. 96–3222 Filed 2–13–96; 8:45 am]

BILLING CODE 3510–22–F

[I.D. 020196B]

Marine Mammals

AGENCY: National Marine Fisheries Service (NMFS), National Oceanic and Atmospheric Administration (NOAA), Commerce.

ACTION: Issuance of modification to permit no. 977 (P77–1#74).

SUMMARY: Notice is hereby given that Permit No. 977, issued to the National Marine Mammal Laboratory, NMFS, 7600 Sand Point Way NE, BIN C15700, Seattle, WA 98115–0070, was modified.

ADDRESSES: The modification and related documents are available for review upon written request or by appointment in the following offices:

Permits Division, Office of Protected Resources, NMFS, 1315 East-West Highway, Room 13130 Silver Spring, MD 20910 (301/712–2289);

Director, Southwest Region, NMFS, 501 West Ocean Blvd., Long Beach, CA 90802–4213 (310/980–4001).

SUPPLEMENTARY INFORMATION: The subject modification has been issued under the authority of the Marine Mammal Protection Act of 1972, as amended (16 U.S.C. 1361 *et seq.*), the provisions of paragraphs (d) and (e) of § 216.33 of the Regulations Governing the Taking and Importing of Marine Mammals (50 CFR part 216).

The Permit was modified to authorize: (1) Use of gas anesthesia on up to 16 adult female California sea lions during instrumentation and recapture; (2) increase in the number of females taken in one year from 20 to 32 under Special Conditions A.1.a. and b.; and (3) use of gas anesthesia on pups authorized to be taken in Special Condition A.1.d. of the Permit. All other Terms and Conditions of the original permit remain in force and effect.

Dated: January 16, 1996.

Ann D. Terbush,

Chief, Permits and Documentation Division, Office of Protected Resources, National Marine Fisheries Service.

[FR Doc. 96–3223 Filed 2–13–96; 8:45 am]

BILLING CODE 3510–22–F

DEPARTMENT OF DEFENSE

Department of the Air Force

Proposed Wing Conversion and Airspace Modification Georgia Air National Guard Notice of Availability of Record of Decision

On January 3, 1996, the United States Air Force signed the Record of Decision (ROD) for the proposed Wing Conversion and Airspace Modification, Georgia Air National Guard. The decisions rendered by the U.S. Air Force were as follows: (1) Conversion of F–15A/B aircraft of the 116th Fighter Wing (FW) at Dobbins Air Reserve Base, Marietta, Georgia to the B–1B aircraft and the relocation of the newly designated 116th Bomb Wing (BW) to Robins Air Force Base, Warner Robins, Georgia, will be implemented and; (2) The Coastal Military Operations Area will be proposed for establishment, Restricted Area R–3007 will be proposed for modification, and both will be presented to the Federal Aviation Administration as airspace actions for aeronautical analysis. The ROD was based on findings contained in a Final Environmental Impact Statement (FEIS) made available on 17 November 1995 through notification in the Federal Register.

Many factors were considered in the decision of converting the 116 FW to the 116 BW, relocating to Robins AFB and creation of the Coastal MOA. Potentially, the most significant were: noise impacts; socioeconomic concerns involving land use, residential encroachment, and economic impact on businesses; aircraft ground and flight safety, electromagnetic radiation, and hazardous materials management; impacts on general aviation and wildlife refuges. Based upon comment from public participation in the Environmental Impact Statement process, mitigation measures will be taken by the Air National Guard to ensure impacts are minimized.

The Office of the Secretary of the Air Force and the Director of the Air National Guard recognize the many unique and sensitive resources prominent with the southeastern United States. These resources have been effectively identified by the public, special interest organizations, and Federal, state, and local officials throughout the study process. The Air Force and the Air National Guard acknowledge that flying operations over these areas must be strictly managed and accomplished with great sensitivity.

Any questions regarding this matter should be directed to: Lt Col Steve Shiell, Air National Guard Readiness Center, ANG/CEVP, 3500 Fetchet Avenue, Andrews Air Force Base, MD 20331–5157, (301) 981–8804.

Patsy J. Conner,

Air Force Federal Register Liaison Officer.

[FR Doc. 96–3307 Filed 2–13–96; 8:45 am]

BILLING CODE 3910–01–P

DEPARTMENT OF DEFENSE

GENERAL SERVICES ADMINISTRATION

NATIONAL AERONAUTICS AND SPACE ADMINISTRATION

[OMB Control No. 9000–0067]

Submission for OMB Review; Comment Request Entitled Incentive Contracts

AGENCIES: Department of Defense (DOD), General Services Administration (GSA), and National Aeronautics and Space Administration (NASA).

ACTION: Notice of request for an extension to an existing OMB clearance (9000–0067).

SUMMARY: Under the provisions of the Paperwork Reduction Act of 1980 (44 U.S.C. 35), the Federal Acquisition Regulation (FAR) Secretariat has submitted to the Office of Management and Budget (OMB) a request to review and approve an extension of a currently approved information collection requirement concerning Incentive Contracts. A request for public comments was published at 60 FR 58338, November 27, 1995. No comments were received.

DATES: Comment Due Date: March 15, 1996.

ADDRESSES: Comments regarding this burden estimate or any other aspect of this collection of information, including suggestions for reducing this burden, should be submitted to: FAR Desk Officer, OMB, Room 10102, NEOB, Washington, DC 20503, and a copy to the General Services Administration, FAR Secretariat (MVRS), 18th & F Streets, NW, Room 4037, Washington, DC 20405. Please cite OMB Control No. 9000–0067, Incentive Contracts, in all correspondence.

FOR FURTHER INFORMATION CONTACT: Mr. Ralph De Stefano, Office of Federal

Acquisition Policy, GSA (202) 501–1758.

SUPPLEMENTARY INFORMATION:

A. Purpose

Incentive contracts are normally used when a firm fixed-price contract is not appropriate and the required supplies or services can be acquired at lower costs, and sometimes with improved delivery or technical performance, by relating the amount of profit or fee payable under the contract to the contractor's performance.

The information required periodically from the contractor—such as cost of work already performed, estimated costs of further performance necessary to complete all work, total contract price for supplies or services accepted by the Government for which final prices have been established, and estimated costs allocable to supplies or services accepted by the Government and for which final prices have not been established—is needed to negotiate the final prices of incentive-related item and services.

The contracting officer evaluates the information received to determine the contractor's performance in meeting the incentive target and the appropriate price revision, if any, for the items or services.

B. Annual Reporting Burden

Public reporting burden for this collection of information is estimated to average *1* hour per completion, including the time for reviewing instructions, searching existing data sources, gathering and maintaining the data needed, and completing and reviewing the collection of information.

The annual reporting burden is estimated as follows: Respondents, *3,000;* responses per respondent, *1;* total annual responses, *3,000;* preparation hours per response, *1;* and total response burden hours, *3,000.*

Obtaining Copies of Proposals: Requester may obtain copies of justifications from the General Services Administration, FAR Secretariat (MVRS), Room 4037, Washington, DC 20405, telephone (202) 501–4755. Please cite OMB Control No. 9000–0067, Incentive Contracts, in all correspondence.

Dated: February 8, 1996.

Beverly Fayson,

FAR Secretariat.

[FR Doc. 96–3321 Filed 2–13–96; 8:45 am]

BILLING CODE 6820–EP–P

DEPARTMENT OF DEFENSE

Department of the Army

Corps of Engineers

Notice of Intent To Prepare a Supplemental Environmental Impact Statement for the Gulf Intracoastal Waterway, Corpus Christi Bay to Port Isabel, TX

AGENCY: U.S. Army Corps of Engineers, DOD.

ACTION: Notice of intent with request for comments.

SUMMARY: This notice provides a summary of the Corps of Engineers ongoing and planned study activities to prepare a Supplemental Environmental Impact Statement (EIS) for the Gulf Intracoastal Waterway (GIWW)—Corpus Christi Bay to Port Isabel, Texas. The purpose of the study is to develop a long-term plan for the placement of dredged material from continued maintenance dredging of the GIWW. The Corps of Engineers is soliciting public input as to the problems that need to be addressed and other study efforts that may be needed. Additionally, a series of public workshops to solicit input and concerns on this study are planned within the next several months.

FOR FURTHER INFORMATION CONTACT: If you have information or questions concerning this notice or the study, or if you wish to be on the mailing list for this study, please contact Mr. Rick Medina at (409) 766–3044 or Mr. Neil McLellan at (409) 766–3963, or you may write to: U.S. Army Corps of Engineers, P.O. Box 1229, Galveston, Texas 77553–1229.

SUPPLEMENTARY INFORMATION:

Introduction

This notice provides a summary of the ongoing and planned study activities to prepare a Supplemental Environmental Impact Statement (EIS) for the Gulf Intracoastal Waterway (GIWW)—Corpus Christi Bay to Port Isabel, Texas. The purpose of the study is to develop a long-term plan for the placement of dredged material from continued maintenance dredging of the GIWW. Because of the public interest and concerns related to dredging and dredged material, the U.S. Army Corps of Engineers has decided to issue this notice and solicit public input regarding the study. This in no way prejudges the significance of new information and circumstances since 1975 nor predetermines the results of the ongoing studies.

Study Background

This section of the GIWW is a 12-foot deep by 125-foot wide channel which extends 117 miles from Corpus Christi Bay to Port Isabel through the Laguna Madre. This reach of the GIWW serves the Ports of Port Mansfield, Harlingen, Port Isabel, and Brownsville, transporting 2 million tons of commerce annually. This vital artery transports over 350 million gallons of gasoline to the Rio Grande Valley. Over 2 million cubic yards of material are dredged annually from this reach at an average annual cost of $1.2 million dollars. Within this reach there are 71 placement areas totaling over 9,000 acres.

The Laguna Madre is one of only three hypesaline lagoons in the world. This shallow, productive estuary produces over 50% of the State's coastal finfish harvest and serves as nursery grounds for the important Gulf shrimp fishery. Seagrasses are a significant resource in the Laguna and cover over 65 percent of the bay bottom. The seagrasses also provide feeding grounds for the largest population of redhead ducks in the world.

Interagency Coordination Team

To address the dredging and placement practices along the GIWW within the Laguna Madre, the Corps of Engineers began efforts in September 1994 to form an Interagency Coordination Team (ICT). Over the next several months, extensive coordination and consultation occurred to obtain the commitment of a broadbased Federal and State agency involvement. The ICT first met in February 1995 and has met nine times as of January 1996. In addition, the ICT has formed a Modelling Task Force which has met three times. The ICT is comprised of found Federal agencies and six State agencies. They include:

- U.S. Army Corps of Engineers
- U.S. Fish and Wildlife Service
- National Marine Fisheries Service
- Environmental Protection Agency
- Texas General Land Office
- Texas Water Development Board
- Texas Parks and Wildlife Department
- Texas Department of Transportation
- Texas Natural Resource Conservation Commission
- Corpus Christi Bay National Estuary Program (Advisory)

Study Process

The study process for developing a long-term dredged material management plan for the Laguna Madre is reflected in the goals established by the ICT.

These goals are, in paraphrase, to (1) identify environmental concerns associated with the GIWW in the Laguna Madre, (2) develop scopes of work needed to address environmental concerns, (3) ensure effective team work among state and federal agencies, and (4) contribute to and expedite completion of the dredged material management plan and environmental study for the GIWW.

Study Status

To address these goals, the ICT has identified a problem list of concerns in the Laguna Madre associated with dredging and dredged material placement. Some of these concerns include:

- Impacts on the benthic community
- Effects of turbidity
- Impacts on seagrass populations
- Effects on circulation and hydrodynamics
- Effects on fishery productivity
- Contaminant concerns
- Viability of alternate placement areas
- Potential for beneficial uses of dredged material

The ICT has developed and approved several scopes of work to perform the necessary scientific studies to address these concerns. A variety of expertise is being utilized. The approved studies, the contractors, date of study initiation, and the estimated costs are shown below.

- Environmental Monitoring of Dredging and Processes in the Lower Laguna Madre. Texas A&M University, Conrad Blucher Institute—August 1994—$300,000
- Environmental Monitoring of Dredging and Processes in the Vicinity of Baffin Bay. Texas A&M University, Conrad Blucher Institute—October 1994—$328,769
- Hydrographic Characterization and Bottom Characterization, Laguna Madre, Texas. U.S. Army Waterways Experiment Station—February 1995—$586,550
- Temporal and Spatial Effects of Open Water Dredge Material Disposal on Habitat Utilization by Fishery Species in Laguna Madre, Texas. National Marine Fisheries Service—July 1995—$581,800
- Review of Available Water and Sediment Quality Data in the Laguna Madre. Espey, Huston, and Associates—July 1995—$22,722

Several other studies are currently under consideration by the ICT. The anticipated contractor and estimated costs include:

- Extension of the Monitoring in the Lower Laguna Madre. Texas A&M University, Conrad Blucher Institute—$190,000
- Extension of the Monitoring in the Upper Laguna Madre. Texas A&M University, Conrad Blucher Institute—$140,000
- Sediment Characteristics, History, and Recent Transport, Laguna Madre, Texas. University of Texas, Bureau of Economic Geology—$310,000
- Laguna Madre Fluid Mud Survey. U.S. Army Waterways Experiment Station—$125,000
- Laguna Madre Open Water Dredged Material Disposal Study. U.S. Army Waterways Experiment Station—$165,000
- Predictive Model of Seagrass Impact. Texas A&M University, University of Texas Marine Science Institute, and Texas Parks and Wildlife Department—$400,000
- Hydrodynamic Circulation of the Upper and Lower Laguna Madre. Contractor and cost are as yet undetermined

The total cost of both approved and proposed studies is approximately $3,150,000, not including the Hydrodynamic Model.

Schedule

The efforts to date are considered to be the first year of a four-year effort. The ICT has tentatively established this time frame to complete the studies, develop the long-term management plan, and prepare a supplemental Environmental Impact Statement. Should the study results indicate, and the ICT agree, that the National Environmental Policy Act (NEPA) process as described above should be modified, a separate notice will be published describing how the Corps will achieve NEPA compliance. In the interim, maintenance dredging of the GIWW will continue only when necessary, although changes to the placement plan will be made as study results warrant.

Public Participation

The ICT is soliciting public input as to the problems that need to be addressed and other study efforts that may be needed. Every effort will be made to address concerns identified. Additionally, a series of public workshops to solicit input and concerns on this study are planned within the next several months.

Dated: February 6, 1996.

Robert B. Gatlin,

Colonel, Corps of Engineers District Engineer.

[FR Doc. 96–3276 Filed 2–13–96; 8:45 am]

BILLING CODE 3710–92–M

DEPARTMENT OF ENERGY

Office of Energy Efficiency and Renewable Energy

[Case No. DH–005]

Energy Conservation Program for Consumer Products: Granting of the Application for Interim Waiver and Publishing of the Petition for Waiver of Superior Fireplace Company From the DOE Vented Home Heating Equipment Test Procedure

AGENCY: Office of Energy Efficiency and Renewable Energy, Department of Energy.

ACTION: Notice.

SUMMARY: Today's notice grants an Interim Waiver to Superior Fireplace Company (Superior) from the existing Department of Energy (DOE or Department) test procedure regarding pilot light energy consumption and weighted average steady-state efficiency for its manually controlled vented heaters, models GI–3821, DSH–36T, DVH–33R, DVH–33T, DVA–33R, and DVA–33T.

Today's notice also publishes a ''Petition for Waiver'' from Superior. Superior's Petition for Waiver requests DOE to grant relief from the DOE vented home heating equipment test procedure relating to the use of pilot light energy consumption in calculating the Annual Fuel Utilization Efficiency (AFUE) and the calculation of weighted average steady state efficiency of its models GI–3821, DSH–36T, DVH–33R, DVH–33T, DVA–33R, and DVA–33T vented heaters. Superior seeks to delete the required pilot light measurement (Q_p) in the calculation of AFUE when the pilot is off, and to test at a minimum fuel input rate of two-thirds instead of the specified ±5 percent of 50 percent of the maximum fuel input rate in the calculation of AFUE. The Department is soliciting comments, data, and information respecting the Petition for Waiver.

DATES: DOE will accept comments, data, and information not later than March 15, 1996.

ADDRESSES: Written comments and statements shall be sent to: Department of Energy, Office of Energy Efficiency and Renewable Energy, Case No. DH–005, Mail Stop EE–43, Room 1J–018, Forrestal Building, 1000 Independence Avenue SW., Washington, D.C. 20585–0121, (202) 586–7140.

FOR FURTHER INFORMATION CONTACT: William W. Hui, U.S. Department of Energy, Office of Energy Efficiency and Renewable Energy, Mail Station EE–431,

Forrestal Building, 1000 Independence Avenue SW., Washington, D.C. 20585–0121, (202) 586–9145

Eugene Margolis, Esq., U.S. Department of Energy, Office of General Counsel, Mail Station GC–72, Forrestal Building, 1000 Independence Avenue SW., Washington, D.C. 20585–0103, (202) 586–9507.

SUPPLEMENTARY INFORMATION: The Energy Conservation Program for Consumer Products (other than automobiles) was established pursuant to the Energy Policy and Conservation Act, as amended (EPCA), which requires DOE to prescribe standardized test procedures to measure the energy consumption of certain consumer products, including vented home heating equipment. The intent of the test procedures is to provide a comparable measure of energy consumption that will assist consumers in making informed purchasing decisions. These test procedures appear at Title 10 CFR Part 430, Subpart B.

The Department amended the test procedure rules to provide for a waiver process by adding § 430.27 to Title 10 CFR Part 430, 45 FR 64108, September 26, 1980. Subsequently, DOE amended the waiver process to allow the Assistant Secretary for Energy Efficiency and Renewable Energy (Assistant Secretary) to grant an Interim Waiver from test procedure requirements to manufacturers that have petitioned DOE for a waiver of such prescribed test procedures. Title 10 CFR Part 430, § 430.27(a)(2).

The waiver process allows the Assistant Secretary to waive temporarily test procedures for a particular basic model when a petitioner shows that the basic model contains one or more design characteristics which prevent testing according to the prescribed test procedures, or when the prescribed test procedures may evaluate the basic model in a manner so unrepresentative of its true energy consumption as to provide materially inaccurate comparative data. Waivers generally remain in effect until final test procedure amendments become effective, resolving the problem that is the subject of the waiver.

An Interim Waiver will be granted if it is determined that the applicant will experience economic hardship if the Application for Interim Waiver is denied, if it appears likely that the Petition for Waiver will be granted, and/or the Assistant Secretary determines that it would be desirable for public policy reasons to grant immediate relief pending a determination on the Petition for Waiver. Title 10 CFR Part 430, § 430.27(g). An Interim Waiver remains in effect for a period of 180 days, or until DOE issues a determination on the Petition for Waiver, whichever is sooner, and may be extended for an additional 180 days, if necessary.

On August 30, 1995, Superior filed an Application for Interim Waiver and a Petition for Waiver regarding (a) pilot light energy consumption and (b) weighted average steady state efficiency. On November 30, 1995, Superior submitted a letter to DOE requesting a modification to the minimum fuel input rate of the vented heaters submitted for consideration in the August 30, 1995 Waiver requests. On January 12, 1996, Superior Fireplace Company submitted a letter providing a list of companies that make similar products, confidential product performance data, and amending the list of models submitted for consideration in the August 30, 1995, Waiver requests.

Superior seeks an Interim Waiver from the DOE test provisions in section 3.5 of Title 10 CFR Part 430, Subpart B, Appendix O, that require measurement of energy input rate of the pilot light (Q_p), and the use of this data in section 4.2.6 for the calculation of AFUE, where:

$$AFUE=(4400\eta_{ss}\eta_u Q_{in\text{-}max}) /(4400\eta_{ss}Q_{in\text{-}max} + 2.5(4600)\eta_u Q_p)$$

Instead, Superior requests that it be allowed to delete Q_p and accordingly, the $(2.5(4600)\eta_u Q_p)$ term in the calculation of AFUE. Superior states that instructions to turn off the transient pilot by the user when the heater is not in use are in the User Instruction Manual and on a label adjacent to the gas control valve. Therefore, the additional energy savings that result when the pilot is turned off ($Q_p = 0$) should be credited. Since the current DOE test procedure does not address pilot light energy savings, Superior asks that the Interim Waiver be granted.

Superior also seeks an Interim Waiver from the DOE test provisions in section 3.1.1 of Title 10 CFR Part 430, Subpart B, Appendix O, which require steady state efficiency of manually controlled vented heaters with various input rates to be determined at a fuel input rate that is within ±5 percent of 50 percent of the maximum fuel input rate, and the use of this data in section 4.2.4 to determine the weighted average steady state efficiency needed in the calculation of AFUE. Instead, Superior requests that it be allowed to determine steady state efficiency, weighted average steady state efficiency, and AFUE at a minimum fuel input rate of two-thirds of the maximum fuel input rate for its manually controlled vented heaters which do not adjust to an input rate as low as 50 percent. Since the current DOE test procedure does not address steady state testing for manually controlled vented heaters with various input rates at fuel input rates other than within ± 5 percent of 50 percent of the maximum fuel input rate, Superior asks that the waiver be granted.

Previous Petitions for Waiver to exclude the pilot light energy input term in the calculation of AFUE for home heating equipment with a manual transient pilot control and allowance to determine weighted average steady state efficiency used in the calculation of AFUE at a minimum fuel input rate of 65.3 percent of the maximum fuel input rate instead of the specified ± 5 percent of 50 percent of the maximum fuel input rate have been granted by DOE to Appalachian Stove and Fabricators, Inc., 56 FR 51711, October 15, 1991, and Valor Incorporated, 56 FR 51714, October 15, 1991.

The Department published a Notice of Proposed Rulemaking on August 23, 1993, to amend the vented home heating equipment test procedure, which would allow the above issues. 58 FR 44583.

Thus, it appears likely that Superior's Petition for Waiver for pilot light and weighted average steady state efficiency for home heating equipment will be granted. In those instances where the likely success of the Petition for Waiver has been demonstrated based upon DOE having granted a waiver for a similar product design, it is in the public interest to have similar products tested and rated for energy consumption on a comparable basis.

Therefore, based on the above, DOE is granting Superior an Interim Waiver for its models GI–3821, DSH–36T, DVH–33R, DVH–33T, DVA–33R, and DVA–33T vented heaters. Superior shall be permitted to test its models GI–3821, DSH–36T, DVH–33R, DVH–33T, DVA–33R, and DVA–33T vented heaters on the basis of the test procedures specified in Title 10 CFR Part 430, Subpart B, Appendix O, with the modifications set forth below:

(i) Delete paragraph 3.5 of Appendix O.

(ii) Delete paragraph 4.2.4 of Appendix O and replace with the following paragraph:

4.2.4 Weighted Average Steady-State Efficiency. (a) For manually controlled heaters with various input rates, the weighted average steady-state efficiency ($\eta_{SS\text{-}WT}$) is:

(1) At ± 5 percent of 50 percent of the maximum fuel input rate as measured in either section 3.1.1 to this appendix for manually controlled gas vented heaters or section 3.1.2 to this appendix for

manually controlled oil vented heaters, or,

(2) At the minimum fuel input rate as measured in either section 3.1.1 to this appendix for manually controlled gas vented heaters or section 3.1.2 to this appendix for manually controlled oil vented heaters if the design of the heater is such that ±5 percent of 50 percent of the maximum fuel input rate can not be set, provided the tested input rate is no greater than two-thirds of maximum input rate of the heater.

(b) For manually controlled heater with one single firing rate, the weighted average steady-state efficiency is the steady-state efficiency measured at the single firing rate.

(iii) Delete paragraph 4.2.6 of Appendix O and replace with the following paragraph:

4.2.6 Annual Fuel Utilization Efficiency. For manually controlled vented heaters, calculate the Annual Fuel Utilization Efficiency (AFUE) as a percent and defined as:

$AFUE = \eta_u$

where:

η_u=as defined in section 4.2.5 of this appendix.

(iv) With the exception of the modification set forth above, Superior shall comply in all respects with the procedures specified in Appendix O of Title 10 CFR Part 430, Subpart B.

This Interim Waiver is based upon the presumed validity of statements and all allegations submitted by the company. This Interim Waiver may be removed or modified at any time upon a determination that the factual basis underlying the Application is incorrect.

The Interim Waiver shall remain in effect for a period of 180 days or until DOE acts on the Petition for Waiver, whichever is sooner, and may be extended for an additional 180-day period, if necessary.

Superior's Petition for Waiver requests DOE to grant relief from the DOE vented home heating equipment relating to the pilot light and weighted average steady state efficiency. Superior seeks (a) to exclude the pilot light energy consumption in the calculation of AFUE, and (b) to determine the weighted average steady state efficiency used in the calculation of AFUE at a minimum fuel input rate of two-thirds of the maximum fuel input rate instead of the specified ±5 percent of 50 percent of the maximum fuel input rate. Pursuant to paragraph (b) of Title 10 CFR Part 430.27, the Department is hereby publishing the ''Petition for Waiver.''

The Petition contains confidential company information; thus, the confidential product performance data provided in Superior's January 12, 1996 submission is not being published. The Department solicits comments, data, and information respecting the Petition.

Issued in Washington, DC.
February 1, 1996.

Christine A. Ervin,

Assistant Secretary, Energy Efficiency and Renewable Energy.

August 30, 1995

The Honorable Christine Ervin,

Assistant Secretary for Energy Efficiency & Renewable Energy, United States Department of Energy, Forrestal Building, 1000 Independence Avenue SW., Washington, D.C. 20585

RE: Petition for Waiver and Application for Interim Waiver

Dear Secretary Ervin: Superior Fireplace Company is requesting you to accept two waivers as listed below, concerning Title 10 Code of Federal Regulations 430.27, as amended 14 November 1986.

These waivers are requested for model GI–3821, DSH–36T.

1. This waiver request refers to section 3.1.1.—Gas fueled vented home heating equipment and section 4.2.4—Weighted-average steady-state efficiency which states that for manually controlled heaters with various input rates the weighted-average steady-state efficiency is measured at a fuel input rate of ±5 percent of 50 percent of the maximum fuel input rate. In fact the above appliances have a gas control that comes with a variable pressure regulator control knob which can be adjusted from the maximum input rate to the minimum input rate. Specifically, Natural gas control knob has adjustment of manifold pressure from 3.5″ W.C. to 2.5″ W.C. and for Propane from 10.0″ W.C. to 6.4″ W.C. These pressure ranges allow the users to vary the fuel input rate as shown below in the table. It is impossible to achieve the fuel input rate of 50% according to the manufacturer's installation instructions. Because the above models cannot be operated at 50% of the maximum fuel input and usually operated at maximum fuel input rate we request that this requirement be modified to 80% of the difference between the maximum fuel input rate and the minimum fuel input rate.

	Maximum rate BTUH	Minimum rate BTUH	Percentage maximum rate	Manifold pressure
GI–3821–N	38000	30000	79	3.5–2.2 W.C.
GI–3821–P	34000	26000	76	10–6.4 W.C.
DSH–36T–N	27000	21000	77	3.5–2.2 W.C.
DSH–36T–P	25000	20000	80	10–6.4 W.C.

2. Second waiver refers to section 3.5—Pilot Light Measurement and section 4.26—Annual Fuel Utilization Efficiency. This section requires the calculation of the pilot light energy to be figured in for calculation of AFUE if the pilot is in operation all the time. The gas control knob on these appliances have three settings—''OFF,'' ''ON'' and ''PILOT''. The pilot can be lighted with the piezo igniter when the gas control knob is turned and depressed at the ''PILOT'' position. Once the pilot is lighted, it will heat the thermopile which generates enough voltage to the gas control valve to have the pilot remain lit. The gas control knob can then be turned to the ''ON'' position for the main burner to turn on. Instructions and labels next to the control will require users to turn the gas control knob to the ''OFF'' position during the off cycle will be provided. Therefore, additional energy will be conserved. Since the current test procedure does not allow any credit given in the calculations for AFUE for saving energy from the pilot during the off cycle, we request that the requirement to include energy input to the pilot light in the AFUE calculation be waived for these appliances. Copies of confidential test data confirming the energy savings will be forwarded to you upon request.

Superior Fireplace Company is confident that both waivers will be granted since similar waivers have been granted in the past to Appalachian Stove and Fabricators, Inc. and Valor Incorporated.

A copy of this petition for waiver and Application for Interim Waiver is being sent to the manufacturers that produce similar products in the U.S.A.

Sincerely,

Hardial Gore,

Sr. Project Engineer.

Nov. 30, 1995

The Honorable Christine Ervin,

Assistant Secretary for Energy Efficiency & Renewable Energy, United States Department of Energy, Forrestal Building, 1000 Independence Avenue SW., Washington, D.C. 20585

RE: Amendment to Petition for Waiver and Application for Interim Waiver

Dear Secretary Ervin: In order to expedite the approval to petition for waiver and application for interim waiver requested in my letter dated Aug. 30th 1995, Superior Fireplaces Company is ready to accept the changes to the first waiver as follows:

Superior Fireplaces Company will adopt the test procedure proposed by DOE on 23 August, 1993.58 FR 44538. Accordingly, we request to calculate the weighted average steady state efficiency using the minimum obtainable fuel input rate provided this rate is no greater than ⅔ the maximum input rate of the fireplace. Specifically, the models included in this request will be tested at ⅔ of the maximum fuel input rate.

The second waiver requested in my first letter will remain unchanged.

We are very confident that both of these waivers will be granted since similar waivers have been granted to the other manufacturers.

Sincerely,

Hardial Gore,

Sr. Project Engineer.

January 12, 1996

The Honorable Christine Ervin, *Assistant Secretary for Energy, Efficiency & Renewable Energy, United States Department of Energy, Forrestal Building, 1000 Independence Avenue, SW., Washington, D.C. 20585*

RE: Additional information to Petition for Waiver and Application for Interim Waiver

Dear Secretary Ervin: Recent conversations with William Hui prompted me to send you the following information requested by the committee.

Per your first request following is a list of companies that Superior knows make similar products namely Heat and Glow, Majestic, Heatilator, CFM, Vermont Castings, Appalachian Stove and Fabricators, Inc. and Valor Incorporated.

Per your second request below is a table that shows a general trend of increase in efficiency as the input is increased. This information is confidential; please do not publish. This data was gathered from a DVH–33R model.

CONFIDENTIAL

As discussed with Mr. Hui we would like to add additional models DVH–33R, DVH–33T, DVA–33R, DVA–33T to the list for approval besides the GI 3821 and DSH–36T.

If you have any questions please feel free to contact me.

Sincerely,

Hardial Gore,

Sr. Project Engineer, Gas Products.

[FR Doc. 96–3056 Filed 2–13–96; 8:45 am]

BILLING CODE 6450–01–M

Federal Energy Regulatory Commission

[Docket No. RP95–408–000 and RP95–408–001]

Columbia Gas Transmission Corp.; Notice of Rescheduled Settlement Conference

February 8, 1996.

Take notice that the informal settlement conference scheduled for Wednesday, February 14, 1996, in this proceeding has been rescheduled to Thursday, February 22, 1996, at 10:00 a.m. The settlement conference will be convened at the offices of the Federal Energy Regulatory Commission, 888 First Street NE., Washington, DC 20426, for the purpose of exploring the possible settlement of the above referenced docket.

Any party, as defined by 18 CFR 385.102(c), or any participant as defined in 18 CFR 385.102(b), is invited to attend. Persons wishing to become a party must move to intervene and receive intervenor status pursuant to the Commission's Regulations (18 CFR 385.214).

For additional information, contact Thomas J. Burgess at 208–2058 or David R. Cain at 208–0917.

Lois D. Cashell,

Secretary.

[FR Doc. 96–3229 Filed 2–13–96; 8:45 am]

BILLING CODE 6717–01–M

[Docket No. ER96–404–000]

Questar Energy Trading Company; Notice of Issuance of Order

February 9, 1996.

On November 20, 1995, as amended December 22, 1995, Questar Energy Trading Company (Questar) submitted for filing a rate schedule under which Questar will engage in wholesale electric power and energy transactions as a marketer. Questar also requested waiver of various Commission regulations. In particular, Questar requested that the Commission grant blanket approval under 18 CFR Part 34 of all future issuances of securities and assumptions of liability by Questar.

On January 29, 1996, pursuant to delegated authority, the Director, Division of Applications, Office of Electric Power Regulation, granted requests for blanket approval under Part 34, subject to the following:

Within thirty days of the date of the order, any person desiring to be heard or to protest the blanket approval of issuances of securities or assumptions of liability by Questar should file a motion to intervene or protest with the Federal Energy Regulatory Commission, 888 First Street NE., Washington, DC 20426, in accordance with Rules 211 and 214 of the Commission's Rules of Practice and Procedure (18 CFR 385.211 and 385.214).

Absent a request for hearing within this period, Questar is authorized to issue securities and assume obligations or liabilities as a guarantor, indorser, surety, or otherwise in respect of any security of another person; provided that such issuance or assumption is for some lawful object within the corporate purposes of the applicant, and compatible with the public interest, and is reasonably necessary or appropriate for such purposes.

The Commission reserves the right to require a further showing that neither public nor private interests will be adversely affected by continued approval of Questar's issuance of securities or assumptions of liability.

Notice is hereby given that the deadline for filing motions to intervene or protests, as set forth above, is February 28, 1996. Copies of the full text of the order are available from the Commission's Public Reference Branch, 888 First Street NE., Washington, DC 20426.

Lois D. Cashell,

Secretary.

[FR Doc. 96–3312 Filed 2–13–96; 8:45 am]

BILLING CODE 6717–01–M

[Docket No. ER95–1787–000]

Texaco Natural Gas Inc.; Notice of Issuance of Order

February 9, 1996.

On September 18, 1995, as amended November 1, 1995 and November 29, 1995, Texaco Natural Gas Inc. (Texaco) submitted for filing a rate schedule under which Texaco will engage in wholesale electric power and energy transactions as a marketer. Texaco also requested waiver of various Commission regulations. In particular, Texaco requested that the Commission grant blanket approval under 18 CFR Part 34 of all future issuances of securities and assumptions of liability by Texaco.

On January 25, 1996, pursuant to delegated authority, the Director, Division of Applications, Office of Electric Power Regulation, granted requests for blanket approval under Part 34, subject to the following:

Within thirty days of the date of the order, any person desiring to be heard or to protest the blanket approval of issuances of securities or assumptions of liability by Texaco should file a motion

to intervene or protest with the Federal Energy Regulatory Commission, 888 First Street NE., Washington, DC 20426, in accordance with Rules 211 and 214 of the Commission's Rules of Practice and Procedure (18 CFR 385.211 and 385.214).

Absent a request for hearing within this period, Texaco is authorized to issue securities and assume obligations or liabilities as a guarantor, indorser, surety, or otherwise in respect of any security of another person; provided that such issuance or assumption is for some lawful object within the corporate purposes of the applicant, and compatible with the public interest, and is reasonably necessary or appropriate for such purposes.

The Commission reserves the right to require a further showing that neither public nor private interests will be adversely affected by continued approval of Texaco's issuances of securities or assumptions of liability.

Notice is hereby given that the deadline for filing motions to intervene or protests, as set forth above, is February 26, 1996. Copies of the full text of the order are available from the Commission's Public Reference Branch, 888 First Street NE., Washington, DC 20426.

Lois D. Cashell,

Secretary.

[FR Doc. 96–3311 Filed 2–13–96; 8:45 am]

BILLING CODE 6717–01–M

Williston Basin Interstate Pipeline Co.; Notice of Application

[Docket No. CP96–169–000]

February 8, 1996.

Take notice that on February 5, 1996, Williston Basin Interstate Pipeline Company (Williston Basin), 200 North Third Street, Suite 300, Bismarck, North Dakota 58501, filed in Docket No. CP96–169–000 an application pursuant to Section 7(b) of the Natural Gas Act for permission and approval to abandon storage and transportation service for suppliers under Rate Schedule S–2 of Williston Basin's FERC Gas Tariff, Second Revised Volume No. 1, all as more fully set forth in the application on file with the Commission and open to public inspection.

Williston Basin states that on June 15, 1983, Montana-Dakota Utilities Co., now MDU Resources Group, Inc. (MDU), predecessor in interest to Williston Basin, was authorized by temporary certificate to store natural gas on behalf of certain of its suppliers and to provide incidental transportation of such gas pursuant to Rate Schedule S–2. Williston Basin further states that on May 25, 1984, the Commission issued its Order Approving Contested Settlement which granted MDU a permanent certificate of public convenience and necessity authorizing the storage and transportation services proposed to be performed on behalf of its suppliers under Rate Schedule S–2. In addition, Williston Basin states that on February 13, 1985 in Docket No. CP82–487–000, *et al.*, Williston Basin was authorized to acquire and operate the interstate pipeline facilities previously owned and operated by MDU as well as to provide the certificated services previously provided by MDU.

It is stated that although the original certificate for the Rate Schedule S–2 service was limited to a maximum four-year term for injections into storage for each Rate Schedule S–2 service agreement, the May 22, 1990 Order Granting Rehearing and Denying Request for Clarification, 51 FERC ¶ 61,199, allowed the Rate Schedule certificate to run for each individual service contract until all of the gas injected into storage under that service contract was withdrawn from storage. It is further stated that service contract was withdrawn from storage. It is further stated that on November 28, 1995, the Commission accepted in Docket No. CP83–254–490, the termination of Williston Basin's final Rate Schedule S–2 service agreement. Therefore, Williston Basin requests abandonment of the certificate authorizing service under Rate Schedule S–2 effective as of the date Commission approval for such requested abandonment is received.

Any person desiring to be heard or to make any protest with reference to said application should on or before February 29, 1996, file with the Federal Energy Regulatory Commission, Washington, D.C. 20426, a motion to intervene or a protest in accordance with the requirements of the Commission's Rules of Practice and Procedure (18 CFR 385.214 or 385.211) and the Regulations under the Natural Gas Act (18 CFR 157.10). All protests filed with the Commission will be considered by it in determining the appropriate action to be taken but will not serve to make the protestants parties to the proceeding. Any person wishing to become a party to a proceeding or to participate as a party in any hearing therein must file a motion to intervene in accordance with the Commission's Rules.

Take further notice that, pursuant to the authority contained in and subject to the jurisdiction conferred upon the Federal Energy Regulatory Commission by Sections 7 and 15 of the Natural Gas Act and the Commission's Rules of Practice and Procedure, a hearing will be held without further notice before the Commission or its designee on this application if no motion to intervene is filed within the time required herein, if the Commission on its own review of the matter finds that permission and approval for the proposed abandonment are required by the public convenience and necessity. If a motion for leave to intervene is timely filed, or if the Commission on its own motion believes that a formal hearing is required, further notice of such hearing will be duly given.

Under the procedure herein provided for, unless otherwise advised, it will be unnecessary for Williston Basin to appear or be represented at the hearing

Lois D. Cashell,

Secretary.

[FR Doc. 96–3228 Filed 2–13–96; 8:45 am]

BILLING CODE 6717–01–M

[Docket No. ER96–525–000]

Utility Management and Consulting, Inc.; Notice of Issuance of Order

February 8, 1996.

On December 5, 1995, as amended December 18, 1995, Utility Management and Consulting, Inc. (UMCI) submitted for filing a rate schedule under which UMCI will engage in wholesale electric power and energy transactions as a marketer. UMCI also requested waiver of various Commission regulations. In particular, UMCI requested that the Commission grant blanket approval under 18 CFR Part 34 of all future issuances of securities and assumptions of liability by UMCI.

On January 19, 1996, pursuant to delegated authority, the Director, Division of Applications, Office of Electric Power Regulation, granted requests for blanket approval under Part 34, subject to the following:

Within thirty days of the date of the order, any person desiring to be heard or to protest the blanket approval of issuances of securities or assumptions of liability by UMCI should file a motion to intervene or protest with the Federal Energy Regulatory Commission, 888 First Street NE., Washington, DC 20426, in accordance with Rules 211 and 214 of the Commission's Rules of Practice and Procedure (18 CFR 385.211 and 385.214).

Absent a request for hearing within this period, UMCI is authorized to issue securities and assume obligations or liabilities as a guarantor, indorser, surety, or otherwise in respect of any

security of another person; provided that such issuance or assumption is for some lawful object within the corporate purposes of the applicant, and compatible with the public interest, and is reasonably necessary or appropriate for such purposes.

The Commission reserves the right to require a further showing that neither public nor private interests will be adversely affected by continued approval of UMCI's issuances of securities or assumptions of liability.

Notice is hereby given that the deadline for filing motions to intervene or protests, as set forth above, is February 20, 1996. Copies of the full text of the order are available from the Commission's Public Reference Branch, 888 First Street NE., Washington, DC 20426.

Lois D. Cashell,

Secretary.

[FR Doc. 96–3309 Filed 2–13–96; 8:45 am]

BILLING CODE 6717–01–M

Energy Transfer Group, L.L.C.; Notice of Issuance of Order

[Docket No. ER96–280–000]

February 9, 1996.

On November 3, 1995, as amended December 14, 1995, Energy Transfer Group, L.L.C. (Energy Transfer) submitted for filing a rate schedule under which Energy Transfer will engage in wholesale electric power and energy transactions as a marketer. Energy Transfer also requested waiver of various Commission regulations. In particular, Energy Transfer requested that the Commission grant blanket approval under 18 CFR Part 34 of all future issuances of securities and assumptions of liability by Energy Transfer.

On January 29, 1996, pursuant to delegated authority, the Director, Division of Applications, Office of Electric Power Regulation, granted requests for blanket approval under Part 34, subject to the following:

Within thirty days of the date of the order, any person desiring to be heard or to protest the blanket approval of issuances of securities or assumptions of liability by Energy Transfer should file a motion to intervene or protest with the Federal Energy Regulatory Commission, 888 First Street, NE., Washington, DC 20426, in accordance with Rules 211 and 214 of the Commission's Rules of Practice and Procedure (18 CFR 385.211 and 385.214).

Absent a request for hearing within this period, Energy Transfer is authorized to issue securities and assume obligations or liabilities as a guarantor, indorser, serety, or otherwise in respect of any security of another person; provided that such issuance or assumption is for some lawful object within the corporate purposes of the applicant, and compatible with the public interest, and is reasonably necessary or appropriate for such purposes.

The Commission reserves the right to require a further showing that neither public nor private interests will be adversely affected by continued approval of Energy Transfer's issuances of securities or assumptions of liability.

Notice is hereby given that the deadline for filing motions to intervene or protests, as set forth above, is February 28, 1996. Copies of the full text of the order are available from the Commission's Public Reference Branch, 888 First Street NE., Washington, DC 20426.

Lois D. Cashell,

Secretary.

[FR Doc. 96–3313 Filed 2–13–96; 8:45 am]

BILLING CODE 6717–01–M

[Docket No. ER96–588–000]

Ocean Energy Services, Inc., Notice of Issuance of Order

February 8, 1996.

On December 21, 1995, Ocean Energy Services, Inc. (Ocean Energy) submitted for filing a rate schedule under which Ocean Energy will engage in wholesale electric power and energy transactions as a marketer. Ocean Energy also requested waiver of various Commission regulations. In particular, Ocean Energy requested that the Commission grant blanket approval under 18 CFR Part 34 of all future issuances of securities and assumptions of liability by Ocean Energy.

On January 19, 1996, pursuant to delegated authority, the Director, Division of Applications, Office of Electric Power Regulation, granted requests for blanket approval under Part 34, subject to the following:

Within thirty days of the date of the order, any person desiring to be heard or to protest the blanket approval of issuances of securities or assumptions of liability by Ocean Energy should file a motion to intervene or protest with the Federal Energy Regulatory Commission, 888 First Street, N.E., Washington, D.C. 20426, in accordance with Rules 211 and 214 of the Commission's Rules of Practice and Procedure (18 CFR 385.211 and 385.214).

Absent a request for hearing within this period, Ocean Energy is authorized to issue securities and assume obligations or liabilities as a guarantor, indorser, surety, or otherwise in respect of any security of another person; provided that such issuance or assumption is for some lawful object within the corporate purposes of the applicant, and compatible with the public interest, and is reasonably necessary or appropriate for such purposes.

The Commission reserves the right to require a further showing that neither public nor private interests will be adversely affected by continued approval of Ocean Energy's issuances of securities or assumptions of liability.

Notice is hereby given that the deadline for filing motions to intervene or protests, as set forth above, is February 20, 1996. Copies of the full text of the order are available from the Commission's Public Reference Branch, 888 First Street NE., Washington, D.C. 20426.

Lois D. Cashell,

Secretary.

[FR Doc. 96–3310 Filed 2–13–96; 8:45 am]

BILLING CODE 6717–01–M

[Docket No. ER96–332–000]

PowerMark, L.L.C., Notice of Issuance of Order

February 8, 1996.

On November 9, 1995, as amended December 6, 1995, PowerMark, L.L.C. (PowerMark) submitted for filing a rate schedule under which PowerMark will engage in wholesale electric power and energy transactions as a marketer. PowerMark also requested waiver of various Commission regulations. In particular, PowerMark requested that the Commission grant blanket approval under 18 CFR Part 34 of all future issuances of securities and assumptions of liability by PowerMark.

On January 19, 1996, pursuant to delegated authority, the Director, Division of Applications, Office of Electric Power Regulation, granted requests for blanket approval under Part 34, subject to the following:

Within thirty days of the date of the order, any person desiring to be heard or to protest the blanket approval of issuances of securities or assumptions of liability by PowerMark should file a motion to intervene or protest with the Federal Energy Regulatory Commission, 888 First Street, N.E., Washington, D.C. 20426, in accordance with Rules 211 and 214 of the Commission's Rules of Practice and Procedure (18 CFR 385.211 and 385.214).

Absent a request for hearing within this period, PowerMark is authorized to issue securities and assume obligations or liabilities as a guarantor, indorser, surety, or otherwise in respect of any security of another person; provided that such issuance or assumption is for some lawful object within the corporate purposes of the applicant, and compatible with the public interest, and is reasonably necessary or appropriate for such purposes.

The Commission reserves the right to require a further showing that neither public nor private interests will be adversely affected by continued approval of PowerMark's issuances of securities or assumptions of liability.

Notice is hereby given that the deadline for filing motions to intervene or protests, as set forth above, is February 20, 1996. Copies of the full text of the order are available from the Commission's Public Reference Branch, 888 First Street NE., Washington, D.C. 20426.

Lois D. Cashell,

Secretary.

[FR Doc. 96–3308 Filed 2–13–96; 8:45 am]

BILLING CODE 6717–01–M

ENVIRONMENTAL PROTECTION AGENCY

[OPP–00425; FRL–5349–3]

Pesticides; Renewal of Information Collection Activities

AGENCY: Environmental Protection Agency (EPA).

ACTION: Notice.

SUMMARY: This notice announces and solicits comments on two Information Collection Requests (ICRs) that are coming up for renewal. The ICR for Data Generation for Reregistration (OMB No. 2070-0107), will expire on June 30, 1996, and the ICR for FIFRA Section 29 Annual Reports on Conditional Registrations (OMB No. 2070-0026), will expire on July 31, 1996.

DATES: Comments must be submitted on or before April 15, 1996.

ADDRESSES: Submit written comments identified by the docket control number OPP–00425 and the appropriate ICR number by mail to: Public Response Section, Field Operations Division (7506C), Office of Pesticide Programs, Environmental Protection Agency, 401 M St., SW., Washington, DC 20460. In person, bring comments directly to the OPP docket which is located in Room 1132 of Crystal Mall #2, 1921 Jefferson Davis Highway, Arlington, VA.

Comments and data may also be submitted electronically by sending electronic mail (e-mail) to: opp-docket@epamail.epa.gov. Electronic comments must be submitted as a ASCII file avoiding the use of special characters and any form or encryption. Comments and data will also be accepted on disks in WordPerfect in 5.1 file format or ASCII file format. All comments and data in electronic form must be identified by the docket number ''OPP–00425'' and the appropriate ICR number. No Confidential Business nformation (CBI) should be submitted through e-mail. Electronic comments on this document may be filed online at many Federal Depository Libraries. Additional information on electronic submissions can be found in Unit III. of this document.

Information submitted as a comment concerning this document may be claimed confidential by marking any part or all of that information as CBI. Information so marked will not be disclosed except in accordance with procedures set forth in 40 CFR part 2. A copy of the comment that does not contain CBI must be submitted for inclusion in the public record. Information not marked confidential may be disclosed publicly by EPA without prior notice. All written comments will be available for public inspection in Rm. 1132 at the Virginia address given above from 8 a.m. to 4:30 p.m., Monday through Friday, excluding legal holidays.

FOR FURTHER INFORMATION CONTACT: Ellen Kramer, Policy and Special Projects Staff, Office of Pesticide Programs, Environmental Protection Agency Mail Code 7501C, 401 M St., SW., Washington, DC 20460, Telephone: (703) 305-6475, e-mail: kramer.ellen@epamail.epa.gov. Copies of the complete ICR and accompanying appendices may be obtained from the OPP docket at the above address or by contacting the person whose name appears under FOR FURTHER INFORMATION CONTACT.

SUPPLEMENTARY INFORMATION: Electronic Availability: Electronic copies of each ICR are available from the EPA Public Access gopher (gopher.epa.gov) at the Environmental Sub-Set entry for this document under ''Rules and Regulations.''

I. Information Collection Requests (ICRs)

EPA is seeking comments on the following ICRs:

1. Title: FIFRA Section 29 Annual Report on Conditional Registrations. ICR No. 0601.06. OMB No. 2070-0026. Expiration date: July 31, 1996.

Affected entities: Producers of pesticide products who seek conditional registrations.

Abstract: Under section 29 of the Federal Insecticide, Fungicide, and Rodenticide Act (FIFRA), the EPA Administrator must submit an annual report to Congress. Included in this report is the total number of applications for conditional registration of pesticides under FIFRA section 3(c)(7)(B) and 3(c)(7)(C) that were filed during the immediately preceding fiscal year. The information collected under this information collection request is the pesticide production volume for the previous fiscal year.

The information collected under section 29 of FIFRA is required by Congress to monitor the conditional registration program. The submission of annual production data is a requirement of a conditional registration as described in 40 152.115(b).

There are no third party disclosures associated with this activity.

Burden Statement: This information is collected annually for each conditional registration of a new active ingredient or new use. The overall respondent burden hours associated with this collection have decreased from the current ICR estimate of 84 total hours per year to 36 total hours per year. This change is due to the decrease in the number of conditional registrations submitted. The annual cost of this ICR has only slightly decreased from $2,628 per year to $2,534.40 ($211.20 per respondent) per year due to more realistic labor rates supplied by the Bureau of Labor Statistics which reflect more accurately the costs borne by the pesticide manufacturers.

The annual respondent burden for this program is estimated to average 1.5 hours per response, including time for: reading correspondences, planning activities, gathering information, compiling and reviewing data, completing paperwork, and storing/maintaining data. On average, each respondent would submit two responses per year so the average burden per respondent would be 3 hours per year for this ICR.

2. Title: Data Generation for Pesticide Reregistration. ICR No. 1504. OMB No. 2070-0107. Expiration date: June 30, 1996.

Affected entities: Producers of pesticide products who seek to support reregistration of their product.

Abstract: FIFRA as amended in 1988 mandates that EPA reregister pesticides originally registered before November 1984. It establishes a process and a schedule for the development of the information EPA needs to assess

whether reregistration of a pesticide or pesticide product causes an unreasonable adverse effect on human health or the environment. Pesticide registrants seeking reregistration must generate and report the required data according to specified time tables.

The purpose of this information collection activity is for EPA to obtain the data needed to assess whether a certain pesticide should be reregistered. Data may consist of toxicology studies, fish and wildlife studies, environmental fate studies, chemistry studies or other data needed to analyze the potential risks and benefits associated with pesticide chemicals and products.

Pesticide chemicals were divided into List A-D; and the reregistration process was divided into five phases. Reregistration phases 1 through 4 for chemicals on Lists B, C, and D are completed.

In Phase 5, EPA must conduct a comprehensive review of all data received on the active ingredient, and decide whether or not it is eligible to be reregistered. Additional or supplemental data may be needed before a final reregistration decision can be made. Also, FIFRA '88 requires registrants to provide product-specific data within 8 months of receipt of an eligibility decision on a pesticide active ingredient.

Data Call-Ins (DCIs) may be completed during the current ICR authorization, however, there is a good possibility that the need for DCIs will carry over to the new ICR authorization. Additionally, follow up call-ins may be necessary after the data have been reviewed.

There are no third party disclosures associated with this activity.

Burden Statement: This information is collected on occasion when the DCI is needed for reregistration. The overall anticipated number of cases per year, the number per chemical list and the respondents affected has decreased from the previous ICR by approximately 60 percent. The previous ICR anticipated an average of 668 respondents and this ICR estimated a total of 269 respondents. Both the unit test costs and labor rates were updated to reflect more current values. The unit test costs for list ''C'' and ''D'' chemicals almost doubled from the prior ICR. The data requirements for list ''B,'' ''C,'' and ''D'' chemicals were revised.

This information collection request is expected to affect an average of 15 DCIs for list ''A'' chemicals and 6 for list ''B,'' ''C,'' and ''D'' chemicals per year. Approximately 90 companies and 805 products may be affected each year. The annual paperwork burden for respondents of DCIs is estimated as follows: list ''A'' chemicals/181 hours; list ''B'' chemicals/318 hours; list ''C'' and ''D'' chemicals/860 hours; and product specific information/368 hours.

The annual estimated costs of the paperwork burden for respondents of DCIs are as follows: list ''A'' chemicals/$11,337; list ''B'' chemicals/$19,830; list ''C'' and ''D''/$53,841; and product specific DCIs/$23,042.

The annual respondent burden for this program is estimated to average 360 hours per response, including time for: reading correspondences, planning activities, gathering information, compiling and reviewing data, completing paperwork, and storing/maintaining data.

Any Agency may not conduct or sponsor, and a person is not required to respond to a collection of information unless it displays a currently valid OMB control number. The OMB control numbers for EPA's regulations are contained in 40 CFR part 9.

II. Request for Comments

EPA solicits comments to:

(i) Evaluate whether the proposed collections of information described above are necessary for the proper performance of the functions of the agency, including whether the information will have practical utility.

(ii) Evaluate the accuracy of the agency's estimates of the burdens of the proposed collections of information.

(iii) Enhance the quality, utility, and clarity of the information to be collected.

(iv) Minimize the burden of the collections of information on those who are to respond, including through the use of appropriate automated or electronic collection technologies or other forms of information technology, e.g., permitting electronic submission of responses.

Send comments regarding these matters, or any other aspect of these information collections, including suggestions for reducing the burdens, to the docket under ADDRESSES listed above.

III. Public Record

A record has been established for this action under docket number ''OPP–00425'' (including comments and data submitted electronically as described below). A public version of this record, including printed, paper versions of electronic comments, which does not include any information claimed as CBI, is available for inspection from 8 a.m. to 4:30 p.m., Monday through Friday, excluding legal holidays. The public record is located in Rm. 1132 of the Public Response and Program Resources Branch, Field Operations Division (7506C), Office of Pesticide Programs, Environmental Protection Agency, Crystal Mall #2, 1921 Jefferson Davis Highway, Arlington, VA.

Electronic comments can be sent directly to EPA at:

opp-docket@epamail.epa.gov

Electronic comments must be submitted as an ASCII file avoiding the use of special characters and any form of encryption.

The official record for this action, as well as the public version, as described above will be kept in paper form. Accordingly, EPA will transfer all comments received electronically into printed, paper form as they are received and will place the paper copies in the official rulemaking record which will also include all comments submitted directly in writing. The official rulemaking record is the paper record maintained at the address in ''ADDRESSES'' at the beginning of this document.

List of Subjects

Environmental protection and Information collection requests.

Dated: February 7, 1996.

Susan H. Wayland,

Acting Assistant Administrator, Office of Prevention, Pesticides and Toxic Substances.

[FR Doc. 96–3279 Filed 2–13–96; 8:45 am]

BILLING CODE 6560–50–F

[OPP–00420; FRL–4980–9]

Nominations to the FIFRA Scientific Advisory Panel; Request for Comments

AGENCY: Environmental Protection Agency (EPA).

ACTION: Notice.

SUMMARY: This notice provides the names, addresses, professional affiliations, and selected biographical data of persons nominated to serve on the FIFRA Scientific Advisory Panel established under section 25(d) of the Federal Insecticide, Fungicide, and Rodenticide Act (FIFRA). The Panel was created on November 28, l975, and made a statutory Panel by amendment to FIFRA, dated October 25, l988. Public comment on the nominations is invited. Comments will be used to assist the Agency in selecting nominees to comprise the Panel and should be so oriented.

DATES: Comments must be postmarked not later than March 15, 1996.

ADDRESSES: By mail, submit comments to: Public Docket and Freedom of Information Section, Field Operations Division (7506C), Office of Pesticide Programs, Environmental Protection Agency, 40l M St., SW., Washington, DC 20460. In person, bring comments to: Rm. 1132, CM #2, 1921 Jefferson Davis Highway, Arlington, VA, (703) 305–5805.

Comments and data may also be submitted electronically by sending electronic mail (e-mail) to: opp-docket@epamail.epa.gov. Electronic comments must be submitted as an ASCII file avoiding the use of special characters and any form of encryption. Comments and data will also be accepted on disks in WordPerfect in 5.1 file format or ASCII file format. All comments and data in electronic form must be identified by the docket number ''OPP–00420.'' No Confidential Business Information (CBI) should be submitted through e-mail. Electronic comments on this document may be filed online at many Federal Depository Libraries. Additional information on electronic submissions can be found in Unit IV. of this document.

Information submitted as a comment concerning this document may be claimed confidential by marking any part or all of that information as CBI. Information so marked will not be disclosed except in accordance with procedures set forth in 40 CFR part 2. A copy of the comment that does not contain CBI must be submitted for inclusion in the public record. Information not marked confidential may be disclosed publicly by EPA without prior notice. All written comments will be available for public inspection in Rm. 1132 at the Virginia address given above from 8 a.m. to 4 p.m., Monday through Friday, excluding legal holidays.

FOR FURTHER INFORMATION CONTACT: By mail: Robert B. Jaeger, Designated Federal Official, FIFRA Scientific Advisory Panel (7509C), Office of Pesticide Programs, Environmental Protection Agency, 40l M St., SW., Washington, DC 20460. Office location and telephone number: Rm. 819I, CM #2, 1921 Jefferson Davis Highway, Arlington, VA, (703) 305–5369.

SUPPLEMENTARY INFORMATION:

I. Background

Amendments to FIFRA enacted November 28, l975, added among other things, a requirement set forth in section 25(d) that notices of intent to cancel or reclassify pesticide registrations pursuant to section 6(b)(2), as well as proposed and final forms of rulemaking pursuant to section 25(a), be submitted to a Scientific Advisory Panel prior to being made public or issued to a registrant. In accordance with section 25(d), the Scientific Advisory Panel is to have an opportunity to comment on the health and environmental impact of such actions.

II. Charter

A Charter for the FIFRA Scientific Advisory Panel has been issued (dated April 5, 1995) in accordance with the requirements of section 9(c) of the Federal Advisory Committee Act, Public Law 92-463, 86 Stat. 770 (5 U.S.C. App I). The qualifications of members as provided by the Charter follow.

A. Qualifications of Members

Members are scientists who have sufficient professional qualifications, including training and experience, to be capable of providing expert comments as to the impact on health and the environment of regulatory actions under sections 6(b) and 25(a) of FIFRA. No person shall be ineligible to serve on the Panel by reason of his/her membership on any other advisory committee to a Federal department or agency or his/her employment by a Federal department or agency (except the Environmental Protection Agency). The Deputy Administrator appoints individuals to serve on the Panel for staggered terms of 4 years. Panel members are subject to the provisions of 40 CFR part 3, subpart F—Standards of Conduct for Special Government Employees, and 5 CFR part 2635-Standards of Ethical Conduct for Employees of the Executive Branch, which include rules regarding conflicts-of-interest. Each nominee selected by the Deputy Administrator, before being formally appointed, is required to submit a Confidential Statement of Employment and Financial Interests, SF-450, which shall fully disclose, among other financial interests, the nominee's sources of research support, if any.

In accordance with section 25(d) of FIFRA, the Deputy Administrator shall require all nominees to the Panel to furnish information concerning their professional qualifications, their educational background, employment history, and scientific publications. The Agency is required to publish in the Federal Register the name, address, and professional affiliations of each nominee.

B. Applicability of Existing Regulations

With respect to the requirement of section 25(d) that the Administrator promulgate regulations regarding conflicts of interest, the Charter provides that EPA's existing regulations applicable to special government employees, which include advisory committee members, will apply to the members of the Scientific Advisory Panel. These regulations appear at 40 CFR part 3, subpart F. In addition, the Charter provides for open meetings with opportunities for public participation.

C. Process of Obtaining Nominees

In accordance with the provisions of section 25(d), EPA, in September 1994, requested the National Institutes of Health (NIH) and the National Science Foundation (NSF) to nominate scientists to fill two vacancies occurring on the Panel. NIH responded by letter dated October 3, l994, enclosing a list of l2 nominees; NSF responded by letter dated February 24, l995, with a list of 4 nominees.

III. Nominees

The following are the names, addresses, professional affiliations, and selected biographical data on nominees being considered for membership on the FIFRA Scientific Advisory Panel to fill two vacancies occurring during the calendar year l995.

1. James Karr, Institute of Environmental Studies, University of Washington, Seattle, Washington,
Expertise: Aquatic ecologist.
Education: BS, Biology, Iowa State University (1965); MS, Ph.D. Zoology, University of Illinois, Urbana-Champaign (1967, 70).
Professional Experience: Assistant Professor, Ecology, Purdue University, 1972-75; Professor, Ecology, University of Illinois, 1975-84; Acting Director, Smithsonian Tropical Research Institute, Balboa, Panama, 1987-88; Professor, Biology, Virginia Polytechnic Institute State University, Blacksburg, Virginia, 1988-91; Professor, Environmental Studies/Ecological Health, University of Washington, 1991-present.
Concurrent Positions: Affiliate, Illinois Natural Historical Survey, 1981-91; Editor, Tropical Ecology, 1977-81, Ecology, 1981-84, Bioscience, 1985-94, Conservation Biology, 1991-present, Freshwater Biology, 1993-present, Ecosystem Health and Medicine, 1993-present.
Research: Communnity ecology from both basic and applied perspectives with emphasis on studies of tropical forest birds and stream fishes, including a wide range of land use and water resources problems.

2. Howard T. Odum, Environmental Engineering Sciences, University of FLorida.
Expertise: Ecosystem ecologist.

Education: AB, University of North Carolina, 1947; Ph.D., Zoology, Yale University, 1951.
Professional Experience: Assistant professor in Biology, University of Florida, 1950-54; Assistant professor in Zoology, Duke University, 1954-56; Director and resident scientist, Institute Marine Science, University of Texas, 1956-63; Chief scientist, Rain Forest Project, P.R. Nuclear Center, 1963-66; Professor in Ecology, University of North Carolina, 1966-70.
Concurrent Position: grants, NSF, Atomic Energy Comm., USPHS and Rockefeller Foundation, 1955-77.
Research: Energy analysis; biological oceanography; biogeochemistry; ecological engineering; tropical meteorology.

3. Susan Preston-Martin, Department of Preventive Medicine, School of Medicine, University of Southern California.
Expertise: Epidemiologist.
Education: B.A., Experimental Psychology, Swarthmore College, 1963; M.P.H., Health Services and Epidemiology, University of California (UCLA), 1972; Ph.D., Epidemioloyg, UCLA, 1978.
Professional Experience: Assistant Professor of Family and Preventive Medicine, USC School of Medicine; 1981-82, Associate Professor of Preventive Medicine, USC, 1982-90; Professor of Preventive Medicine, USC School of Medicine, 1990-present.
Concurrent Position: Adjunct Assistant Professor of Epidemiology, UCLA School of Public Health, 1978-85; Adjunct Associate Professor of Epidemiology, UCLA, 1985-present; Editorial Board Cancer Causes and Control, 1994-97; ref. (1977-present): American Journal of Epidemiology; American Journal of Ind. Medicine; British Journal of Cancer; Cancer; Cancer Epidemiology, Biomarkers and Prevention; Epidemiology; Cancer Research; International Journal of Cancer; International Journal of Epidemiology.; J.N.C.I.; Journal of Neurosurgery; Consultant to research projects for IARC, NIOSH, NCI, NAS, NRC, Central Brain Tumor Registry of the U.S. and the Electric Power Research Institute.
Research: Epidemiology of tumors of the central nervous system, leukemia, ionizing radiation, N-nitroso compounds and effects in human populations of exposure to electric and magnetic fields, and effects in offspring of parental exposures. Also case-control studies of: lip cancer in women; thyroid cancer in women in LA; spinal tumors in women, cancers of nose, sinus and nasopharynx; acute myeloid leukemia in LA; international collaborative study of brain tumors in children; childhood brain tumors on the U.S. West Coast; and gliomas in women in LA.

4. Steven D. Aust, Department of Chemistry and Biochemistry, Utah State University.
Expertise: Chemistry, Environmental Toxicology.
Education: B.S. Agriculture, Washington State University, 1960; M.S. Nutrition, Washington State University, 1962; Ph.D. Dairy Science, University of Illinois, 1965; U.S.P.H.S. Postdoctoral Fellow, Department of Toxicology, Karolinska Institute, Stockholm, Sweden.
Professional Experience: Professor, Department of Biochemistry, Michigan State University, 1977-87; Assistant Director, Environmental Toxicology Center, Michigan State University, 1980-84; Director, Center for the Study of Active Oxygen in Biology and Medicine, Michigan State University, 1985-87; Director, Center of Excellence in Biotechnology, Utah State University, 1987-91; Professor, Chemistry and Biochemistry, Utah State University, 1987-present.
Concurrent Positions: Advisory Committee on the Toxicology Information Program, NAS-NRC, 1978-present; Editorial Board, Archives of Biochemistry and Biophysics, 1978-present; Assistant Editor Journal of Biochemical Toxicology, 1984-present; Editorial Board, Free Radicals in Biology and Medicine, 1984-present.
Research: Role of iron in oxygen radical generation; biodegradation of environmental pollutants.

5. Morton A. Barlaz, Department of Civil Engineering, North Carolina State University.
Expertise: Chemical and environmental engineering.
Education: B.S. Chemical engineering, University of Michigan, 1978; M.S. Civil and Environmental engineering, University of Wisconsin, 1985; Ph.D. Civil and Environmental engineering, University of Wisconsin, 1988.
Professional Experience: Environmental Engineer, Israeli Environmental Protection Service, Jerusalem, Israel, 1981-82; Assistant Professor of Civil Engineering, North Carolina State University, 1989-94; Associate Professor of Civil Engineering, North Carolina State University, 1994-present.
Research: Biodegradation processes as they apply to the decomposition of municipal solid waste, hazardous waste and aquifer restoration; solid waste management.

6. Ronald J. Kendall, The Institute of Wildlife Environmental Toxicology, Department of Environmental Toxicology, Clemson University.
Expertise: Wildlife and Environmental Toxicology.
Education: B.S., Biology, University of South Caroline, 1974; M.S., Wildlife Biology, Clemson University, 1976; Ph.D., Fisheries and Wildlife Sciences, 1980.
Professional Experience: Assistant Professor Environmental Toxicology, Huxley College of Environmental Studies, 1980-85; Associate Professor/Professor Environmental Toxicology and Director of the Institute of Wildlife Toxicology, Western Washington University, 1985-89; Director, Institute of Wildlife and Environmental Toxicology, Clemson University, 1989-present.
Concurrent Position: Executive Committee/President/Immediate Past President, Society of Environmental Toxicology and Chemistry (SETAC), 1991-95; Department of Interior's Biomonitoring of Environmental Status and Trends Program/NAS/NRC, 1994-present; Expert Advisor in Ecological Risk Assessment to Environmental Enforcement Section, U.S. Department of Justice, 1993-present; Editorial Annual Review Issue of Journal of Environmental Toxicology and Chemistry, 1991-present; Wildlife Criteria Subcommittee of Ecological Processes and Effects Committee, U.S. EPA Science Advisory Board, 1994-present.
Research: Effects of pesticides on fish and wildlife populations; behavioral toxicology of pesticides in wildlife; heavy metal and industrial contamination in the environment; toxicology of lead, cadmium, and PCBs in avian and mammalian wildlife species; ecological risk assessment.

7. Ronald H. Olsen, Department of Microbiology and Immunology, Medical School, University of Michigan.
Expertise: Microbiology, biochemistry, biotechnology.
Education: B.S. Microbiology/Zoology, University of Minnesota, 1957; M.S. Microbiology/Biochemistry, University of Minnesota, 1959; Ph.D. Microbiology/Biochemistry, University of Minnesota, 1962.
Professional Experience: Assistant Professor Microbiology, Colorado Sate University, 1962-64; Assistant Professor Microbiology, University of Michigan Medical School, 1965-69; Associate Professor Microbiology, University of Michigan Medical School, 1969-75; Professor Microbiology, University of Michigan Medical School, 1975-present; Adjunct Professor Microbiology and Microbiology, Wayne State University, 1981-present; Director, Institute of

Science and Technology, 1988-91; Adjunct Professor Zoology, Michigan State University, 1989-present.
Research: Genetics of Pseudomonas and related gram negative bacteria and their metabolism of substituted aromatic compounds; in situ bioremediation; discreet and global regulation of pathways in response to limiting oxygen environments (DNA sequence analysis).

8. Joan Bray Rose, Department of Marine Science, University of South Florida.
Expertise: Environmental microbiology; microbial risk assessment; water pollution microbiology.
Education: B.S. Microbiology, University of Arizona, 1976; M.S. Microbiology, University of Wyoming, 1980; Ph.D. Microbiology, University of Arizona, 1985.
Professional Experience: Research Associate, Department of Microbiology and Immunology, and Nutrition and Food Science, University of Arizona, 1986-89; Assistant Professor, Department of Civil Engineering and Mechanics, University of South Florida, 1991-94; Assistant Professor, Department of Environmental and Occupational Health, University of South Florida, 1989-94; Associate Professor, Marine Science, University of Arizona, 1994-present.
Research: Microbial water quality of municipal water supplies; viral and bacterial indicators or anthropogenic stresses on the ecosystem in the Florida Keys; viruses associated with marine water impacted by septic tanks.

9. Genevieve M. Matanoski, Department of Epidemiology, School of Hygiene and Public Health, The Johns Hopkins University (JHU), Baltimore, Maryland,
Expertise: Epidemiologist.
Education: AB, Chemistry, Radcliff College (1951); MD, JHU (1955); MPH, JHU (1962); DrPH, JHU (1964).
Professional Experience: Research Assistant, JHU (1955); Intern, Pediatrics, JHU (1955-56); Assistant Professor, JHU (1956-57); Research Assistant, Epidemiology, JHU (1957-59); Pediatrician, JHU (1957-present); Associate Professor, Epidemiology, JHU (1969-76); Member of teaching faculty, International Agency for Research in Cancer (IARC) (1982); Instructor, Epidemiology, University of Minnesota (1983).
Current Positions: Associate Professor, Preventive Medicine, University of Maryland Dental School (1970-present); Professor, Epidemiology, JHU (1976-present); Program Director, Occupational Environmental Epidemiology, JHU (1978-present).
Research: Cancer risks from occupational and evironmental exposures; evaluation of health programs; family-based population studies; infant mortality and congenital malformations; screening tests for DNA repair mechanisms.

10. John D. Potter, Department of Epidemiology, University of Washington, Seattle.
Expertise: Epidemiologist.
Education: MBBS, Medicine, University of Queensland, Australia (1971) [equivalent to MD in USA]; Ph.D., Epidemiology, University of Queensland, Australia (1984).
Professional Experience: Resident Medical Officer, Princess Alexandra Hospital, Brisbane, Australia 1972-73; Registrar in Psychiatry, Christchurch Hospital, Adelaide, Australia, 1974-75; Research Fellow in Epidemiology, CSIRO Division of Human Nutrition, Adelaide, Australia, 1977-82; Associate Director, Division of Epidemiology, University of Minnesota, Minneapolis, 1988-94; Professor and Director, Cancer Research, Epidemiology, University of Minnesota, Minneapolis, 1992-94; Associate Director, Epidemiology, Biostatistics, and Prevention, University of Minnesota Cancer Center, 1993-94.
Concurrent Positions: Full Member and Head, Cancer Prevention Research Program, Fred Huchinson Cancer Research Center, Seattle, Washington, 1994-present; Professor, Department of Epidemiology, University of Washington, Seattle, WA, 1994-present; Executive Committee, American Society of Preventive Oncology, 1990-present; Editorial Board, European Journal of Cancer Prevention, 1990-present; Editorial Board, Cancer, Epidemiology, Biomarkers and Prevention, 1991-95, Associate Editor, 1995-present; Editor, American Journal of Epidemiology, 1995-present.
Research: Causative factors for colon cancer (diet and alcohol); progesterone and estrogen receptors and mammary neoplasia in women; host factors in carcinogenesis (emphasis on the colon).

11. Philip J. Landrigan, Department of Community Medicine, Mount Sinai School of Medicine.
Education: MD, Harvard Medical School; Medical Internship, Cleveland Metropolitan General Hospital; Pediatric Residency, Children's Hospital Medical Center (Boston); MS, Occupational Medicine and Diploma of Industrial Health, University of London.
Professional Experience: Commissioned Officer in Public Health Service, Epidemic Intelligence Service Officer, and Medical Epidemiologist, CDC (1970-85); Director of the Division of Surveillance, Hazard Evaluations and Field Studies, NIOSH (1979-85); co-founder and co-director, Beacon Hill Community Clinic, Decatur, GA (1971-77).
Concurrent Positions: Ethel H. Wise Professor, Chair of Community Medicine and Director of Environmental and Occupational Medicine, Mount Sinai School of Medicine (present); Professor, Pediatrics, Mt. Sinai School of Medicine; Member, Institute of Medicine of National Academy of Sciences; Editor-In-Chief, American Journal of Industrial Medicine; Editor, Environmental Research; Chair, Asbestos Advisory Board of the State of New York; Chair, New York State Advisory Council on Lead Poisoning Prevention.
Research: Clinical and epidemiologic evaluation of human diseases caused by toxic environmental and occupational exposures; heavy metal poisoning; pesticide intoxication; solvent neuropathy; chronic lung diseases; chemically induced renal disease; occupational carcinogenesis.

12. Sherman Athonia James, Department of Epidemiology, School of Public Health, The University of Michigan.
Education: A.B., Psychology/Philosophy, Talladega College (1964); Ph.D., Social Psychology, Washington University, St. Louis (1973).
Professional Experience: Assistant Professor, Epidemiology, University of N. Carolina (UNC)(1974-79); Associate Professor, Epidemiology, UNC, (1980-84); Professor, Epidemiology, UNC, (1985-89).
Concurrent Positions: Adjunct Professor, Epidemiology, UNC, (1989-present); Research Scientist, Survey Research Center, Institute for Social Research, University of Michigan (1990-present); Professor of Epidemiology, University of Michigan (1989-present); Associate Dean for Academic Affairs, School of Public Health, University of Michigan (1993-present).
Research: Social factors and cardiovascular disease in African Americans; social factors and adverse pregnancy outcomes in African Americans.

13. Louis J. Guillette, Jr., Department of Zoology, University of Florida, Gainesville.
Education: B.S., Biology, New Mexico Highlands University (1976); M.A., Biology, University of Colorado, Boulder (1979); Ph.D., University of Colorada, Boulder (1981).
Professional Experience: Assistant Professor, Biology, Wichita State University (1981-85); Associate Professor, Zoology, University of Florida (Gainesville) (1987-92); Professor,

Zoology, University of Florida (Gainesville) (1992-present); Editorial Board: Copeia (1986-88), Journal of Herpetology (1984-86); Board of Directors, Society for the Study of Amphibians and Reptiles (1990-93); Manuscript Reviewer for several Scientific Journals.
Concurrent Positions: Affiliate Curator of Herpetology, Florida Museum of Natural History (1985-present); Adjunct Professor, Herpetology, University of Otago, Dunedin, New Zealand (1993-present); Board Member: IUCN, Species Survival Commission, Captive Breeding Specialist Group (1991-present); Crocodile Specialist Group (1990-present); President-Elect, Society for the Study of Amphibians and Reptiles (1995); Grant Reviewer: NSF, NIH, National Geographic Society, NY Zoological Society, Australian Research Council.
Research: Vertebrate reproductive biology; reproductive anatomy, physiology, endocrinology, and ecotoxicology; endocrine-disrupting environmental contaminants.

14. Raymond S. H. Yang, Director, Center for Environmental Toxicology and Technology, Colorado State University.
Education: B.S., Biology, National Taiwan University (1963); M.S., Toxicology/Entomology, North Carolina State University (1967); Ph.H., Toxicology/Entomology, N.C. State University (1970).
Professional Experience: Research Associate/Assistant Professor, Toxicology, Institute of Comparative and Human Toxicology (1973-76); Senior Scientist/Fellow/Manager, Biochemical Toxiciology, Bushy Run Research Center (Mellon Institute/Union Carbide Corp.) (1976-83); Adjunct Professor, Toxicology, University of Pittsburgh (1978-83); Principale Investigator/Chemical Manager, National Toxicology Program (NIEHS) (1987-90); Adjunct Professor, Toxicology, N.C. State University (1988-90); Head, Department of Environmental Health, CSU (College of Veterinary Medicine and Biochemical Sciences) (1990-95); Editorial Board: Fundamental and Applied Toxicology (1988-94).
Concurrent Positions: Professor of Toxicology, Department of Environmental Health, CSU (1990-present); Director, Center for Environmental Toxicology and Technology, CSU (1991-present); Program Director and Principal Investigator on Hazardous Waste Chemical Mixtures, NIEHS (1992-present); Editorial Board: Reviews of Environmental Contamination and Toxicology (1989-present); Air Quality Science Advisory Board, State of Colorado (1992-present); Member of Scientific Advisory Panel to Electric Power Research Institute (1989-present); Steering Committee, Decision Support Methodologies for Human Risk Assessment of Toxic Substances, ATSDR/DHHS (1994-present).
Research: Pharmacokinetics, biochemical toxicology of chemical mixtures/environmental contaminants.

15. Patricia A. Buffler, Dean, School of Public Health, University of California at Berkeley.
Professional Experience: Associate Dean for Research, University of Texas Health Sciences Center at Houston, School of Public Health (1980-84); U.S. Department of Health and Human Services, National Center for Health Statistics (1985-87); Director, Southwest Center for Occupational and Environmental Health, Health Sciences Center (1988); Ashbel Smith Professor in Public Health, University of Texas (1989); Dean, School of Public Health, University of California (1991-present).
Concurrent Positions: Chair, National Urban Air Toxics Research Center; Member of USEPA Science Advisory Board; Advisor to: World Health Organization, National Center for Occupational Safety and Health, US Department of Energy, USEPA, National Library of Medicine, and the National Research Council/National Academy of Sciences; DuPont Company's Epidemiologic Review Board (1990-present); Board of Directors, FMC Corporation (1994-present).
Research: Association of diet, smoking, air pollution, toxic chemical wastes, low-level radiation, and electromagnetic fields on the risks of cancer, lung diseases, fertility, pregnancy outcomes, and other diseases and conditions among working and non-working populations; protective effect of vitamin A and beta-carotene for laryngeal cancer.

IV. Public Record

A record has been established for this document under docket number ''OPP–00420'' (including comments and data submitted electronically as described below). A public version of this record, including printed, paper versions of electronic comments, which does not include any information claimed as CBI, is available for inspection from 8 a.m. to 4:30 p.m., Monday through Friday, excluding legal holidays. The public record is located in Rm. 1132 of the Public Response and Program Resources Branch, Field Operations Division (7506C), Office of Pesticide Programs, Environmental Protection Agency, Crystal Mall #2, 1921 Jefferson Davis Highway, Arlington, VA.

Electronic comments can be sent directly to EPA at:

opp-Docket@epamail.epa.gov

Electronic comments must be submitted as an ASCII file avoiding the use of special characters and any form of encryption.

The official record for this action, as well as the public version, as described above will be kept in paper form. Accordingly, EPA will transfer all comments received electronically into printed, paper form as they are received and will place the paper copies in the official record which will also include all comments submitted directly in writing. The official record is the paper record maintained at the address in ''ADDRESSES'' at the beginning of this document.

Dated: January 31, 1996.

Lynn R. Goldman,

Assistant Administrator for Prevention, Pesticides and Toxic Substances.

[FR Doc. 96–2725 Filed 2–13–96; 8:45 am]

BILLING CODE 6560–50–F

[OPPTS–62151A; FRL–4996–3]

Dialogue Group on Identification of Lead-Based Paint Hazards; Notice of Schedule Change

AGENCY: Environmental Protection Agency (EPA).

ACTION: Notice.

SUMMARY: EPA has modified the schedule for meetings of the Dialogue Process to support the forthcoming rulemaking under section 403 of the Toxics Substances Control Act (TSCA).

DATES: The discussion on residential soil containing lead will be held on February 15, 1996, while the meeting on the format and structure of the section 403 Rule will take place on March 21, 1996. Both meetings will be held from 10 a.m. to 5 p.m.

ADDRESSES: The meetings will be held at: The Grand Hyatt Washington, 1000 H St., NW., Washington, DC 2001.

All written comments should be submitted in triplicate to: TSCA Document Receipts (7407), Office of Pollution Prevention and Toxics, Environmental Protection Agency, Rm. E–G99, 401 M St., SW., Washington, DC 20460. All comments should be identified by the docket number ''OPPTS–62151.''

Comments and data may also be submitted electronically by sending electronic mail (e-mail) to: ncic@epamail.epa.gov. Electronic

comments must be submitted as an ASCII file avoiding the use of special characters and any form of encryption. Comments and data will also be accepted on disks in WordPerfect in 5.1 file format or ASCII file format. All comments and data in electronic form must be identified by the docket number OPPTS–62151. No Confidential Business Information (CBI) should be submitted through e-mail. Electronic comments on this document may be filed online at many Federal Depository Libraries. Additional information on electronic submissions can be found in Unit III. of this document.

FOR FURTHER INFORMATION CONTACT: For information on the Dialogue Process or the schedule, please contact: Andrea Yang, Chemical Management Division (7404), Office of Pollution Prevention and Toxics, Environmental Protection Agency, 401 M St., SW., Washington, DC 20460, Telephone: 202–260–4918, e-mail: yang.andrea@epamail.epa.gov.

SUPPLEMENTARY INFORMATION:

I. Dialogue Schedule

Section 403 of TSCA, 15 U.S.C. 2683 directs EPA to promulgate regulations that identify lead hazards in paint, household dust, and bare residential soil. Title IV of TSCA, titled ''Lead Exposure Reduction,'' which includes section 403, was added to TSCA by the Residential Lead-Based Paint Hazard Reduction Act of 1992. To support the rulemaking, EPA has established a Dialogue Process to obtain input from interested parties early in the rulemaking process. Establishment of the Dialogue Process was announced in the Federal Register of July 18, 1995 (60 FR 36806).

Due to the federal government shutdowns, the November 16, 1995 and January 18, 1996 meetings of the Dialogue Participants were postponed. These meetings have been rescheduled as indicated.

All meetings are open to the public and will provide opportunity for public comment on a first-come, first-served basis. Thirty minutes will be allocated at each meeting for public comment. Due to the need to accommodate as many interested parties as possible during the public comment periods, EPA will limit comments to 5 minutes for representatives of organizations and 3 minutes for individuals. Members of the public interested in offering comment at a meeting of the Dialogue should sign-up at the meeting registration desk.

Individuals wishing to provide comments to EPA, but who cannot be accommodated during the comment period or cannot attend the Dialogue meetings may submit written comments to EPA at the address listed in the ADDRESSES unit of this Notice. Individuals who have information or data that they wish to share with Dialogue participants should send 30 copies to Andrea Yang at the address listed in the ''FOR FURTHER INFORMATION CONTACT'' unit of this Notice.

II. Confidential Business Information

A person may assert a claim of confidentiality for any information, including all or portions of written comments, submitted to EPA in connection with the Dialogue Process. Any person who submits a comment subject to a claim of confidentiality must also submit a nonconfidential version. Any claim of confidentiality must accompany the information when it is submitted to EPA. Persons must mark information claimed as confidential by circling, bracketing, or underlining it, and marking it with CONFIDENTIAL or some other appropriate designation. EPA will disclose information subject to a claim of confidentiality only to the extent permitted by section 14 of TSCA and 40 CFR part 2, subpart B. If a person does not assert a claim of confidentiality for information at the time it is submitted to EPA, EPA may make the information public without further notice to that person.

III. Public Docket

A record has been established for this action under docket number ''OPP–62151'' (including comments and data submitted electronically as described below). A public version of this record, including printed, paper versions of electronic comments, which does not include any information claimed as CBI, is available for inspection from noon to 4 p.m., Monday through Friday, excluding legal holidays. The public record is located in the TSCA Nonconfidential Information Center, Rm. NE–B607, 401 M St., SW., Washington, DC 20460.

Electronic comments can be sent directly to EPA at:

ncic@epamail.epa.gov

Electronic comments must be submitted as an ASCII file avoiding the use of special characters and any form of encryption.

The official record for this action, as well as the public version, as described above will be kept in paper form. Accordingly, EPA will transfer all comments received electronically into printed, paper form as they are received and will place the paper copies in the official rulemaking record which will also include all comments submitted directly in writing. The official rulemaking record is the paper record maintained at the address in ADDRESSES at the beginning of this document.

List of Subjects

Environmental protection and Lead.

Dated: February 8, 1996.

Joseph A. Carra,

Acting Director, Office of Pollution Prevention and Toxics.

[FR Doc. 96–3424 Filed 2–12–96; 1:04 pm]

BILLING CODE 6560–50–F

[OPP–50814; FRL–5347–4]

Trichodex; Notice of Receipt of Request for an Experimental Use Permit

AGENCY: Environmental Protection Agency (EPA).

ACTION: Notice.

SUMMARY: EPA has received from Makhteshim Chemical Works Ltd., a request (11678–R) for an Experimental Use Permit for the use of Trichodex (ABG–8007) on raw agricultural commodities. This request is associated with a petition for a temporary exemption from tolerances (PP) 6G4622 for all raw agricultural commodities treated with Trichodex. EPA considers this application to be of national or regional significance.

DATES: Written comments should be submitted to EPA by March 15, 1996.

ADDRESSES: By mail: submit written comments to: Public Response and Program Resources Branch, Field Operations Division (7506C), Office of Pesticide Programs, Environmental Protection Agency, 401 M St., SW., Washington, DC 20460. Comments and data may also be submitted electronically by sending electronic mail (e-mail) to: opp-docket@epamail.epa.gov. Electronic comments must be submitted in ASCII file avoiding the use of special characters and any form of encryption. Comments and data will also be accepted on disks in WordPerfect in 5.1 file format or ASCII file format. All comments and data in electronic form must be identified by docket number ''OPP–50814.'' No Confidential Business Information (CBI) should be submitted through e-mail. Electronic comments on this document may be filed online at many Federal Depository Libraries. Additional information on electronic submissions can be found under the

SUPPLEMENTARY INFORMATION unit of this document.

FOR FURTHER INFORMATION CONTACT: Shanaz Bacchus, Biopesticides and Pollution Prevention Division (7501W), Office of Pesticide Programs, Environmental Protection Agency, 401 M St., SW., Washington, DC 20460. Office location, telephone number, and e-mail address: 5th Floor, CS #1, 2805 Jefferson Davis Highway, Arlington, VA, (703)–308–8097; e-mail: bacchus.shanaz@epamail.epa.gov.

SUPPLEMENTARY INFORMATION: This notice announces that EPA has received a request for an Experimental Use Permit for use of Trichodex on certain crops from Makhteshim Chemical Works Ltd., c/o Makhteshim-Agan of North America Inc., 551 Fifth Avenue, Suite 1100, New York, NY 10176. The request is associated with a petition (PP 6G4622) for a temporary exemption from the requirement of a tolerance for Trichodex in or on all raw agricultural commodities. The microbial pesticide Trichodex is also referred to as ABG–8007. It contains dried fermentation solids and solubles resulting from fermentation of *Trichoderma harzianum* isolate T–39, containing T–39 fungus propagules as either conidia or mycelia.

The request for the EUP is being submitted as a 2–year non-crop destruct program. The pesticide is to be applied to a total of 360 acres (A) as shown below: in Arizona (10 A), California (250 A), Florida (20 A), New York (25 A), Ohio (5 A), Oregon (25 A) and Washington (25 A). For this EUP, the registrant plans to treat wine grapes, table grapes and strawberry. The rates of application are 2 to 4 lb Trichodex per acre. One to four applications are to be made to wine grapes in a rotational program, while four to six applications are to be applied to wine grapes during pre-bloom, bloom, bunch closure, veraison, and preharvest stages. Table grapes are to be treated with one to three applications during pre-bloom to fruit set. Treatment for strawberry includes up to eight applications (once per week) throughout the growing season from pre-bloom to harvest. A total of 5,000 pounds of Trichodex will be used on wine grapes: California (3,500 lbs), New York (500 lbs), Oregon (500 lbs), Washington (500 lbs). Table grapes in Arizona will be treated with 120 lbs and in California with 600 lbs for a total of 720 lbs Trichodex. Strawberry treatment will include 1,200 lbs (CA), 960 lbs (FL), and 240 lbs (OH) for a total of 2,400 lbs of Trichodex. In total, 8,120 lbs of this microbial pesticide will be applied annually in this 2–year non-crop destruct program.

EPA has established a record for this notice under docket number OPP–50814; (including comments and data submitted electronically as described below). A public version of this record, including printed, paper versions of electronic comments, which does not include any information claimed as (CBI), is available for inspection from 8 a.m. to 4:30 p.m., Monday through Friday, except legal holidays. The public record is located in Room 1132 of the Public Response and Program Resources Branch, Field Operations Division (7506C), Office of Pesticide Programs, Environmental Protection Agency, Crystal Mall #2, 1921 Jefferson Davis Highway, Arlington, VA.

Electronic comments can be sent directly to EPA at:

opp-docket@epamail.epa.gov

The official record for this notice, as well as the public version, as described above will be kept in paper form. Accordingly, EPA will transfer all comments received electronically into printed, paper form as they are received and will place the paper copies in the official record which will also include all comments submitted directly in writing. The official record is the paper record maintained at the address listed under the ''ADDRESSES'' unit at the beginning of this document.

List of Subjects

Environmental protection, Experimental use permits.

Dated: February 1, 1996.

Janet L. Andersen,

Acting Director, Biopesticides and Pollution Prevention Division, Office of Pesticide Programs.

[FR Doc. 96–3022 Filed 2–13–96; 8:45 am]

BILLING CODE 6560–50–F

[OPP–30377A; FRL–4980–5]

Certain Companies; Approval of Pesticide Product Registrations

AGENCY: Environmental Protection Agency (EPA).

ACTION: Notice.

SUMMARY: This notice announces Agency approval of applications submitted by Ciba-Geigy Corporation (Ciba Seeds) and Mycogen Plant Sciences, to conditionally amend two transgenic plant pesticide products involving a changed use pattern of the products pursuant to the provisions of section 3(c)(7)(B) of the Federal Insecticide, Fungicide, and Rodenticide Act (FIFRA), as amended.

FOR FURTHER INFORMATION CONTACT: By mail: Michael Mendelsohn, Biopesticides and Pollution Prevention Division (7501W), Office of Pesticide Programs, Environmental Protection Agency, 401 M St., SW., Washington, DC 20460. Office location and telephone number: Rm. CS51B6, Westfield Building North Tower, 2800 Crystal Drive, Arlington, VA 22202, (703) 308–8715; e-mail: mendelsohn.mike@epamail.epa.gov.

SUPPLEMENTARY INFORMATION: EPA issued a notice, published in the Federal Register of January 13, 1995 (60 FR 3209), which announced that Ciba-Geigy Corporation (Ciba-Seeds), 3054 Cornwallis Road, P.O. Box 12257, Research Triangle Park, NC, 27709, and Mycogen Plant Sciences, 4980 Carroll Canyon Road, San Diego, CA 92121, had submitted applications to register the transgenic plant pesticides B.t.k. CryIA(b) Insect Control Protein as Produced in Corn and B.t.k. CryIA(b) Insect Control Protein as Produced in Corn (EPA File Symbols 66736–R and 68467–R), containing the active ingredient *Bacillus thuringiensis* delta-endotoxin as produced in corn by a cryIA(b) gene and its controlling sequences as found on plasmid vector pCIB4431 0.0001–0.0018 percent total plant protein respectively, an active ingredient not included in any previously registered products.

Both applications were approved on August 9, 1995 to include in their presently registered uses a new use for full commercial use in field corn (EPA Registration Numbers 66736–1 and 68467–1).

These registrations were conditionally amended to allow additional use of the products for food and feed in field corn in accordance with FIFRA section 3(c)(7)(B). This use is conditional upon data development in the area of resistance management research and limited by resistance management and expiration provisions of the registrations.

A conditional registration may be granted under section 3(c)(7)(B) of FIFRA for a product involving a changed use pattern where certain data are lacking, on condition that such data are received as specified by EPA and the applicant has submitted satsifactory data pertaining to the proposed additional use and the amended registration would not significantly increase the risk of any unreasonable adverse effect.

The Agency has considered the available data on the risks associated with the proposed use of *Bacillus thuringiensis* delta-endotoxin as produced in corn by a cryIA(b) gene and its controlling sequences as found on

plasmid vector pCIB4431, and information on social, economic, and environmental benefits to be derived from such use. Based on these reviews, the Agency was able to make basic environmental, health, and safety determinations which show that use of *Bacillus thuringiensis* delta-endotoxin as produced in corn by a cryIA(b) gene and its controlling sequences as found on plasmid vector pCIB4431 consistent with the terms and conditions of registration during the period of conditional registration will not significantly increase the risk of unreasonable adverse effect on the environment.

These products are conditionally registered in accordance with FIFRA section 3(c)(7)(B). Submission of production information for these products for the fiscal year in which use of commercial field corn is conditionally registered, begins on October 1, and ends September 30. Production information will be submitted to the Agency no later than November 15, following the end of the preceding fiscal year. If the conditions are not complied with the registrations will be subject to cancellation in accordance with FIFRA section 6(e). These registrations will automatically expire on midnight August 2, 2000.

More detailed information on these conditional registrations is contained in an EPA Pesticide Fact Sheet on *Bacillus thuringiensis* delta-endotoxin as produced in corn by a cryIA(b) gene and its controlling sequences as found on plasmid vector pCIB4431.

A copy of this fact sheet, which provides a summary description of the chemical, use patterns and formulations, science findings, and the Agency's regulatory position and rationale, may be obtained from the National Technical Information Service (NTIS), 5285 Port Royal Road, Springfield, VA 22161.

In accordance with section 3(c)(2) of FIFRA, a copy of the approved label and the list of data references used to support registration are available for public inspection in the office of the Product Manager. The data and other scientific information used to support registration, except for material specifically protected by section 10 of FIFRA, are available for public inspection in the Public Response and Program Resources Branch, Field Operations Division (7506C), Office of Pesticide Programs, Environmental Protection Agency, Rm. 1132, CM #2, Arlington, VA 22202 (703–305–5805). Requests for data must be made in accordance with the provisions of the Freedom of Information Act and must be addressed to the Freedom of Information Office (A–101), 401 M St., SW., Washington, D.C. 20460. Such requests should: (1) Identify the product name and registration number and (2) specify the data or information desired.

Authority: 7 U.S.C. 136.

List of Subjects

Environmental protection, Pesticides and pests, Product registration.

Dated: January 31, 1996.

Janet L. Andersen,

Acting Director, Biopesticides Pollution Prevention Division, Office of Pesticide Programs.

[FR Doc. 96–2726 Filed 2–13–96; 8:45 am]

BILLING CODE 6560–50–F

[OPP–30402; FRL–4995–7]

Certain Companies; Applications to Register Pesticide Products

AGENCY: Environmental Protection Agency (EPA).

ACTION: Notice.

SUMMARY: This notice announces receipt of applications to register pesticide products containing a new active ingredient not included in any previously registered products and a product involving a changed use pattern pursuant to the provisions of section 3(c)(4) of the Federal Insecticide, Fungicide, and Rodenticide Act (FIFRA), as amended.

DATES: Written comments must be submitted by March 15, 1996.

ADDRESSES: By mail, submit written comments identified by the document control number [OPP–30402] and the file symbol to: Public Response and Program Resources Branch, Field Operations Divisions (7506C), Office of Pesticide Programs, Environmental Protection Agency, 401 M St., SW., Washington, DC 20460. In person, bring comments to: Environmental Protection Agency, Rm. 1132, CM #2, 1921 Jefferson Davis Hwy., Arlington, VA.

Comments and data may also be submitted electronically by sending electronic mail (e-mail) to: opp-docket@epamail.epa.gov. Electronic comments must be submitted as an ASCII file avoiding the use of special characters and any form of encryption. Comments and data will be accepted on disks in Wordperfect in 5.1 file format or ASCII file format. All comments and data in electronic form must be identified by the docket number [OPP–30402]. No ''Confidential Business Information'' (CBI) should be submitted through e-mail. Electronic comments on this notice may be filed online at many Federal Depository Libraries. Additional information on electronic submission can be found below in this document.

Information submitted as a comment concerning this notice may be claimed confidential by marking any part or all of that information as ''Confidential Business Information'' (CBI). Information so marked will not be disclosed except in accordance with procedures set forth in 40 CFR part 2. A copy of the comment that does not contain CBI must be submitted for inclusion in the public record. Information not marked confidential may be disclosed publicly by EPA without prior notice. All written comments will be available for public inspection in Rm. 1132 at the address given above, from 8 a.m. to 4:30 p.m., Monday through Friday, excluding holidays.

FOR FURTHER INFORMATION CONTACT: By mail: Richard Keigwin, Product Manager (PM 10), Registration Division (7505C), Office of Pesticide Programs, Environmental Protection Agency, 401 M St., SW., Washington, DC 20460. Office location and telephone number: Rm. 210, CM #2, 1921 Jefferson Davis Hwy, Arlington, VA 22202, (703) 305–6788; e-mail: keigwin.richard@epamail.epa.gov.

SUPPLEMENTARY INFORMATION: EPA received applications to register pesticide products containing an active ingredient not included in any previously registered products and a product involving a changed use pattern pursuant to the provisions of section 3(c)(4) of FIFRA. Notice of receipt of these applications does not imply a decision by the Agency on the applications.

1. Products Containing Active Ingredients Not Included In Any Previously Registered Products

1. File Symbol: 69075–E. Applicant: Rohm and Haas, 100 Independence Mall West, Philadelphia, PA 19106. Product name: RH–0345 2SC Turf Insecticide. Insecticide. Active ingredient: Benzoic acid, 4-chloro-, 2 benzoyl-2-(1,1-dimethylethyl) hydrazide at 23.1 percent. Proposed classification/Use: General. For control of immature stages of certain insects in turfgrass.

2. File Symbol: 69075–R. Applicant: Rohm and Haas. Product name: RH–0345 Technical Insecticide. Insecticide. Active ingredient: Benzoic acid, 4-chloro-, 2 benzoyl-2-(1,1-dimethylethyl) hydrazide at 92.6 percent. Proposed classification/Use: General. For repackaging, relabeling, formulation, or processing only.

II. Product Involving a Changed Use Pattern

File Symbol: 707–238. Applicant: Rohm and Haas, 100 Independence Mall West, Philadelphia, PA 19106. Product name: Confirm 2F Agricultural Insecticide. Insecticide. Active ingredient: Benzoic acid, 3,5-dimethyl-, 1-(1,1-dimethylethyl)-2-(4-ethylbenzoyl) hydrazide at 23 percent. Proposed classification/Use: General. To include in its presently registered use, a new use on pecans.

Notice of approval or denial of an application to register a pesticide product will be announced in the Federal Register. The procedure for requesting data will be given in the Federal Register if an application is approved.

Comments received within the specified time period will be considered before a final decision is made; comments received after the time specified will be considered only to the extent possible without delaying processing of the application.

A record has been established for this notice under docket number [OPP–30402] (including comments and data submitted electronically as described below). A public version of this record, including printed, paper versions of electronic comments, which does not include any information claimed as CBI, is available for inspection from 8 a.m. to 4:30 p.m., Monday through Friday, excluding legal holidays. The public record is located in Rm. 1132 of the Public Response and Program Resources Branch, Field Operations Division (7506C), Office of Pesticide Programs, Environmental Protection Agency, Crystal Mall #2, 1921 Jefferson Davis Highway, Arlington, VA.

Electronic comments can be sent directly to EPA at:

opp-docket@epamail.epa.gov

Electronic comments must be submitted as an ASCII file avoiding the use of special characters and any form of encryption.

The official record for this notice, as well as the public version, as described above will be kept in paper form. Accordingly, EPA will transfer all comments received electronically into printed, paper form as they are received and will place the paper copies in the official record which will also include all comments submitted directly in writing. The official record is the paper record maintained at the address in ''ADDRESSES'' at the beginning of this document.

Written comments filed pursuant to this notice, will be available in the Public Response and Program Resources Branch, Field Operations Division at the address provided from 8 a.m. to 4:30 p.m., Monday through Friday, excluding legal holidays. It is suggested that persons interested in reviewing the application file, telephone this office at (703–305–5805), to ensure that the file is available on the date of intended visit.

Authority: 7 U.S.C. 136.

List of Subjects

Environmental protection, Pesticides and pests, Product registration.

Dated: February 5, 1996.

Stephen L. Johnson,

Director, Registration Division, Office of Pesticide Programs.

[FR Doc. 96–3019 Filed 2–13–96; 8:45 am]

BILLING CODE 6560–50–F

[OPP–30401; FRL–4994–2]

S. C. Johnson and Son, Inc.; Application to Register a Pesticide Product

AGENCY: Environmental Protection Agency (EPA).

ACTION: Notice.

SUMMARY: This notice announces receipt of an application to register a pesticide product containing a new active ingredient not included in any previously registered product pursuant to the provisions of section 3(c)(4) of the Federal Insecticide, Fungicide, and Rodenticide Act (FIFRA), as amended.

DATES: Written comments must be submitted by March 15, 1996.

ADDRESSES: By mail, submit written comments identified by the document control number [OPP–30401] and the file symbol (4822–UUN) to: Public Response and Program Resources Branch, Field Operations Divisions (7506C), Office of Pesticide Programs, Environmental Protection Agency, 401 M St., SW., Washington, DC 20460. In person, bring comments to: Environmental Protection Agency, Rm. 1132, CM #2, 1921 Jefferson Davis Hwy., Arlington, VA.

Comments and data may also be submitted electronically by sending electronic mail (e-mail) to: opp-docket@epamail.epa.gov. Electronic comments must be submitted as an ASCII file avoiding the use of special characters and any form of encryption. Comments and data will be accepted on disks in Wordperfect in 5.1 file format or ASCII file format. All comments and data in electronic form must be identified by the docket number [OPP–30401]. No ''Confidential Business Information'' (CBI) should be submitted through e-mail. Electronic comments on this notice may be filed online at many Federal Depository Libraries. Additional information on electronic submission can be found below in this document.

Information submitted as a comment concerning this notice may be claimed confidential by marking any part or all of that information as ''Confidential Business Information'' (CBI). Information so marked will not be disclosed except in accordance with procedures set forth in 40 CFR part 2. A copy of the comment that does not contain CBI must be submitted for inclusion in the public record. Information not marked confidential may be disclosed publicly by EPA without prior notice. All written comments will be available for public inspection in Rm. 1132 at the address given above, from 8 a.m. to 4:30 p.m., Monday through Friday, excluding holidays.

FOR FURTHER INFORMATION CONTACT: By mail: John Tice, Biopesticides and Pollution Prevention Division (7501W), Office of Pesticide Programs, Environmental Protection Agency, 401 M St., SW., Washington, DC 20460. Office location and telephone number: Rm. CS51B6, Westfield Building North Tower, 2800 Crystal Drive, Arlington, VA 22202, (703) 308–8295; e-mail: tice.john@epamail.epa.gov.

SUPPLEMENTARY INFORMATION: EPA received an application from S. C. Johnson and Son, Inc., 1525 Howe St., Racine, WI 53403, to register the pesticide product OFF! Moth Proofer 5 (EPA File Symbol 4822–UUN), containing the active ingredient lavandin oil at 11.49 percent, an active ingredient not included in any previously registered product pursuant to the provisions of section 3(c)(4) of FIFRA. The product is classified for general use as a moth repellant to be placed in drawers and closets as a freshner while protecting clothes from moth damage. Notice of receipt of the application does not imply a decision by the Agency on the application.

Notice of approval or denial of an application to register a pesticide product will be announced in the Federal Register. The procedure for requesting data will be given in the Federal Register if an application is approved.

Comments received within the specified time period will be considered before a final decision is made; comments received after the time specified will be considered only to the extent possible without delaying processing of the application.

A record has been established for this notice under docket number [OPP–30401] (including comments and data submitted electronically as described below). A public version of this record, including printed, paper versions of electronic comments, which does not include any information claimed as CBI, is available for inspection from 8 a.m. to 4:30 p.m., Monday through Friday, excluding legal holidays. The public record is located in Rm. 1132 of the Public Response and Program Resources Branch, Field Operations Division (7506C), Office of Pesticide Programs, Environmental Protection Agency, Crystal Mall #2, 1921 Jefferson Davis Highway, Arlington, VA.

Electronic comments can be sent directly to EPA at:

opp-docket@epamail.epa.gov

Electronic comments must be submitted as an ASCII file avoiding the use of special characters and any form of encryption.

The official record for this notice, as well as the public version, as described above will be kept in paper form. Accordingly, EPA will transfer all comments received electronically into printed, paper form as they are received and will place the paper copies in the official record which will also include all comments submitted directly in writing. The official record is the paper record maintained at the address in ''ADDRESSES'' at the beginning of this document.

Written comments filed pursuant to this notice, will be available in the Public Response and Program Resources Branch, Field Operations Division at the address provided from 8 a.m. to 4:30 p.m., Monday through Friday, excluding legal holidays. It is suggested that persons interested in reviewing the application file, telephone this office at (703–305–5805), to ensure that the file is available on the date of intended visit.

Authority: 7 U.S.C. 136.

List of Subjects

Environmental protection, Pesticides and pests, Product registration.

Dated: January 30, 1996.

Janet L. Andersen,

Acting Director, Biopesticides and Pollution Prevention Division, Office of Pesticide Programs.

[FR Doc. 96–2727 Filed 2–13–96; 8:45 am]

BILLING CODE 6560–50–F

[OPP–50815; FRL–5347–5]

Aspergillus Flavus AF36; Notice of Receipt of a Request for an Experimental Use Permit

AGENCY: Environmental Protection Agency (EPA).

ACTION: Notice.

SUMMARY: EPA has received from the Interregional Research Project No. 4 (IR–4) an application for an Experimental Use Permit (EUP) (69224–EUP-R) for the use of *Aspergillus flavus* AF36 as an antimicrobial agent in or on cotton. EPA considers this EUP to be of regional or national significance and is associated with Petition No. 5E5475.

DATES: Written comments should be submitted to EPA by March 15, 1996.

ADDRESSES: By mail, submit written comments to: Public Response and Program Resources Branch, Field Operations Division (7506C), Office of Pesticide Programs, Environmental Protection Agency, 401 M St., SW., Washington, DC 20460. In person, bring comments to: Rm. 1132, CM #2, 1921 Jefferson Davis Highway, Arlington, VA. Comments and data may also be submitted electronically by sending electronic mail (e-mail) to: opp-docket@epamail.epa.gov. Electronic comments must be submitted in ASCII file format avoiding the use of special characters and any form of encryption. Comments and data will also be accepted on disks in WordPerfect in 5.1 file format or ASCII file format. All comments and data in electronic form must be identified by docket number OPP–50815. No Confidential Business Information (CBI) should be submitted through e-mail. Electronic comments on this document may be filed online at many Federal Depository Libraries. Additional information on electronic submissions can be found under the SUPPLEMENTARY INFORMATION unit of this document.

FOR FURTHER INFORMATION CONTACT: Shanaz Bacchus, Biopesticides and Pollution Prevention Division (7501W), Office of Pesticide Programs, Environmental Protection Agency, 401 M St., SW., Washington, DC 20460. Office location, telephone number, and e-mail address: 5th Floor, CS #1, 2800 Jefferson Davis Highway, Arlington, VA, (703)-308–8097; e-mail: bacchus.shanaz@epamail.epa.gov.

SUPPLEMENTARY INFORMATION: This notice announces that EPA has received from IR–4, New Jersey Agricultural Experiment Station, P.O. Box 231, New Brunswick, NJ 08903–0231, an application for an EUP (69224–EUP-R) for the use of *Aspergillus flavus* AF36 (non-aflatoxin-producing strain) as an antimicrobial agent in or on cotton. EPA considers this EUP to be of regional or national significance and is associated with Petition No. 5E5475. The application was submitted on behalf of the Agricultural Research Service, United States Department of Agriculture, 1100 Robert E. Lee Boulevard, P.O. Box 19687, New Orleans, Louisiana, 70179–0687.

The use of *Aspergillus flavus* AF36 in the proposed manner is intended to prevent aflatoxin contamination of cottonseed by competitively excluding aflatoxin producing strains from infecting treated crop. The microbial pesticide is to be applied over a 3–year period at 10 pounds per acre to 1,120 acres of commercial cotton fields in Yuma County, Arizona. There will be one application per crop, thus allowing a total of 11,200 pounds per year. Applications will be made at last cultivation prior to first bloom with a cultivator mounted granular applicator. For this EUP program, the registrant proposes to treat 120 acres in year 1, and 500 acres each in years 2 and 3. *Aspergillus flavus* AF36 was initially isolated from this region which is most seriously affected by aflatoxin contamination. Cottonseed from treated and untreated fields will be sampled according to the Arizona Commercial Feed Law and monitored for aflatoxin content in a commercial laboratory. This experimental use program will be performed in order to assess grower response to the use of the microbial pesticide and to determine long-term and short-term influences of treating relatively large contiguous acreages. Impact within treated fields and outside treated fields will be determined and monitored over multiple years. Treated crops are intended for commercial use.

EPA has established a record for this document under docket number OPP–50815 (including comments and data submitted electronically as described below). A public version of this record, including printed, paper versions of electronic comments, which does not include any information claimed as CBI, is available for inspection from 8 a.m. to 4:30 p.m., Monday through Friday, except legal holidays. The public record is located in Room 1132 of the Public Response and Program Resources Branch, Field Operations Division (7506C), Office of Pesticide Programs, Environmental Protection Agency, Crystal Mall #2, 1921 Jefferson Davis Highway, Arlington, VA.

Electronic comments can be sent directly to EPA at:

opp-docket@epamail.epa.gov

The official record for this document, as well as the public version, as described above will be kept in paper form. Accordingly, EPA will transfer all comments received electronically into printed, paper form as they are received and will place the paper copies in the official record which will also include all comments submitted directly in writing. The official record is the paper record maintained at the address listed under the ''ADDRESSES'' unit at the beginning of this document.

List of Subjects

Environmental protection, Experimental use permits.

Dated: February 1, 1996.

Janet L. Andersen,

Acting Director, Biopesticides and Pollution Prevention Division, Office of Pesticide Programs.

[FR Doc. 96–3023 Filed 2–13–96; 8:45 am]

BILLING CODE 6560–50–F

[PP 4G4409 and 5G4551/T683; FRL 4984–3]

Northrup King Corporation; Establishment of Exemptions From Requirement of Tolerances

AGENCY: Environmental Protection Agency (EPA).

ACTION: Notice.

SUMMARY: EPA has established exemptions from the requirement of tolerances for the combined residues of the plant pesticide *Bacillus thuringiensis* CryIA(b) delta-endotoxin and the genetic material necessary for its production (plasmid vector pZ01502) and for the plant pesticide inert ingredient *phosphinothricin acetyltransferase* and the genetic material necessary for its production (plasmid vector pZ01502) in or on certain raw agricultural commodities.

DATES: These temporary exemptions from the requirement of tolerances expire May 30, 1996.

FOR FURTHER INFORMATION CONTACT: By mail: Michael Mendelsohn, Biopesticides and Pollution Prevention Division (7501W), Office of Pesticide Programs, Environmental Protection Agency, 401 M St., SW., Washington, DC 20460. Office location and telephone number: Rm. Crystal Station, 5th Fl., 2800 Crystal Drive, Arlington, VA (703) 308–8712; e-mail: mendelsohn.mike@epamail.epa.gov.

SUPPLEMENTARY INFORMATION: Northrup King Corporation, 7500 Olson Memorial Hwy., Golden Valley, MN 55427, has requested in pesticide petitions PP 4G4409 and 5G4551 the establishment of exemptions from the requirement of tolerances in or on certain raw agricultural commodities as follows.

1. Pesticide petition (PP) 4G4409 has established an exemption from the requirement of a tolerance for the combined residues of the plant pesticide *Bacillus thuringiensis* CryIA(b) delta-endotoxin and the genetic material necessary for its production (plasmid vector pZ01502) in corn, when used as a plant pesticide in all raw agricultural commodities of field corn, sweet corn, and popcorn.

2. Pesticide petition(PP) 5E4551 has established an exemption from the requirement of a tolerance for the combined residues of the plant pesticide inert ingredient *phosphinothricin acetyltransferase* and the genetic material necessary for its production (plasmid vector pZ01502) in corn, when used as a plant pesticide inert ingredient in all raw agricultural commodities of field corn, sweet corn, and popcorn.

These temporary exemptions from the requirement of tolerances will permit the marketing of the above raw agricultural commodities when treated in accordance with the provisions of experimental use permit 67979–EUP–1, which is being issued under the Federal Insecticide, Fungicide, and Rodenticide Act (FIFRA), as amended (Pub. L. 95–396, 92 Stat. 819; 7 U.S.C. 136).

The scientific data reported and other relevant material were evaluated, and it was determined that exemptions from the requirement of tolerances will protect the public health. Therefore, the temporary exemptions from the requirement of tolerances have been established on the condition that the pesticides be used in accordance with the experimental use permit and with the following provisions:

1. The total amount of the active ingredients to be use must not exceed the quantity authorized by the experimental use permit.

2. Northrup King Corporation must immediately notify the EPA of any findings from the experimental use that have a bearing on safety. The company must also keep records of production, distribution, and performance and on request make the records available to any authorized officer or employee of the EPA or the Food and Drug Administration.

These temporary exemptions from the requirement of tolerances expire May 30, 1996. Residues remaining in or on all raw agricultural commodities after this expiration date will not be considered actionable if the pesticides are legally applied during the term of, and in accordance with, the provisions of the experimental use permit and temporary exemptions from the requirement of tolerances. These temporary exemptions from the requirement of tolerances may be revoked if the experimental use permit is revoked or if any experience with or scientific data on this pesticide indicate that such revocation is necessary to protect the public health.

The Office of Management and Budget has exempted this notice from the requirement of section 3 of Executive Order 12866.

Pursuant to the requirements of the Regulatory Flexibility Act (Pub. L. 96–354, 94 Stat. 1164, 5 U.S.C. 601–612), the Administrator has determined that regulations establishing new tolerances or raising tolerance levels or establishing exemptions from tolerance requirements do not have a significant economic impact on a substantial number of small entities. A certification statement to this effect was published in the Federal Register of May 4, 1981 (46 FR 24950).

Authority: 21 U.S.C. 346a(j).

List of Subjects

Environmental protection, Administative practice and procedure, Agricultural commodities, Pesticides and pests, Reporting and recordkeeping requirements.

Dated: January 31, 1996.

Janet L. Andersen,

Acting Director, Biopesticides and Pollution Prevention Division, Office of Pesticide Programs.

[FR Doc. 96–2921; Filed 2–13–96; 8:45 am]

BILLING CODE 6560–50–F

FEDERAL COMMUNICATIONS COMMISSION

[Report No. 2120]

Petition for Reconsideration of Actions in Rulemaking Proceedings

February 9, 1996.

Petition for reconsideration have been filed in the Commission rulemaking proceedings listed in this Public Notice and published pursuant to 47 CFR Section 1.429(e). The full text of these documents are available for viewing and copying in Room 239, 1919 M Street, N.W., Washington, D.C. or may be purchased from the Commission's copy contractor ITS, Inc. (202) 857–3800. Opposition to this petition must be filed February 29, 1996. See Section 1.4(b)(1) of the Commission's rules (47 CFR 1.4(b)(1)). Replies to an opposition must be filed within 10 days after the time for filing oppositions has expired.

Subject: Market Entry and Regulation of Foreign-affiliated Entities (IB Docket No. 95–22, RM–8355, RM–8392)

Number of Petitions Filed: 5

Subject: Amendment of the Commission's Rules Regarding the 37.0–38.6 GHz and 38.6–40.0 GHz Bands (ET Docket No. 95–183, RM–8553)

Implementation of Section 309(j) of the Communications Act—Competitive Bidding, 37.0–38.6 GHz and 38.6–40.0 GHz (PP Docket No. 93–253)

Number of Petitions Filed: 2

Federal Communications Commission.

William F. Caton,

Acting Secretary.

[FR Doc. 96–3209 Filed 2–13–96; 8:45 am]

BILLING CODE 6712–01–M

FEDERAL MARITIME COMMISSION

Ocean Freight Forwarder License Applicants

Notice is hereby given that the following applicants have filed with the Federal Maritime Commission applicants for licenses as ocean freight forwarders pursuant to section 19 of the Shipping Act of 1984 (46 U.S.C. app. 1718 and 46 CFR 510).

Persons knowing of any reason why any of the following applicants should not receive a license are requested to contact the Office of Freight Forwarders, Federal Maritime Commission, Washington, D.C. 20573.

SafeTech Int'l, Inc., 631 Silverleaf Road, Charlotte, NC 28217, Duane D. Simpson, Sole Proprietor.

Dated: February 8, 1996.

Joseph C. Polking,

Secretary.

[FR Doc. 96–3239 Filed 2–13–96; 8:45 am]

BILLING CODE 6730–01–M

FEDERAL RESERVE SYSTEM

ABC Bancorp, et al.; Formations of; Acquisitions by; and Mergers of Bank Holding Companies

The companies listed in this notice have applied for the Board's approval under section 3 of the Bank Holding Company Act (12 U.S.C. 1842) and § 225.14 of the Board's Regulation Y (12 CFR 225.14) to become a bank holding company or to acquire a bank or bank holding company. The factors that are considered in acting on the applications are set forth in section 3(c) of the Act (12 U.S.C. 1842(c)).

Each application is available for immediate inspection at the Federal Reserve Bank indicated. Once the application has been accepted for processing, it will also be available for inspection at the offices of the Board of Governors. Interested persons may express their views in writing to the Reserve Bank or to the offices of the Board of Governors. Any comment on an application that requests a hearing must include a statement of why a written presentation would not suffice in lieu of a hearing, identifying specifically any questions of fact that are in dispute and summarizing the evidence that would be presented at a hearing.

Unless otherwise noted, comments regarding each of these applications must be received not later than March 8, 1996.

A. Federal Reserve Bank of Atlanta (Zane R. Kelley, Vice President) 104 Marietta Street, N.W., Atlanta, Georgia 30303:

1. ABC Bancorp, Moultrie, Georgia; to merge with Southland Bancorporation, Dothan, Alabama, and thereby indirectly acquire Southland Bank, Dothan, Alabama.

B. Federal Reserve Bank of Minneapolis (James M. Lyon, Vice President) 250 Marquette Avenue, Minneapolis, Minnesota 55480:

1. First State Bank of Rushmore KSOP Plan and Trust, Worthington, Minnesota; to become a bank holding company by acquiring 30 percent of the voting shares of First Rushmore Bancorporation, Inc., Worthington, Minnesota, and thereby indirectly acquire First State Bank of Rushmore, Rushmore, Minnesota.

Board of Governors of the Federal Reserve System, February 8, 1996.

Jennifer J. Johnson,

Deputy Secretary of the Board.

[FR Doc. 96-3224 Filed 2-13-96; 8:45 am]

BILLING CODE 6210-01-F

BNCCorp, Inc.; Notice of Proposal to Engage de novo in Permissible Nonbanking Activities

The company listed in this notice has given notice under § 225.23(a)(1) of the Board's Regulation Y (12 CFR 225.23(a)(1)) for the Board's approval under section 4(c)(8) of the Bank Holding Company Act (12 U.S.C. 1843(c)(8)) and § 225.21(a) of Regulation Y (12 CFR 225.21(a)) to commence or to engage *de novo*, either directly or through a subsidiary, in a nonbanking activity that is listed in § 225.25 of Regulation Y as closely related to banking and permissible for bank holding companies. Unless otherwise noted, such activities will be conducted throughout the United States.

The notice is available for immediate inspection at the Federal Reserve Bank indicated. Once the notice has been accepted for processing, it will also be available for inspection at the offices of the Board of Governors. Interested persons may express their views in writing on the question whether commencement of the activity can ''reasonably be expected to produce benefits to the public, such as greater convenience, increased competition, or gains in efficiency, that outweigh possible adverse effects, such as undue concentration of resources, decreased or unfair competition, conflicts of interests, or unsound banking practices.'' Any request for a hearing on this question must be accompanied by a statement of the reasons a written presentation would not suffice in lieu of a hearing, identifying specifically any questions of fact that are in dispute, summarizing the evidence that would be presented at a hearing, and indicating how the party commenting would be aggrieved by approval of the proposal.

Comments regarding the application must be received at the Reserve Bank indicated or the offices of the Board of Governors not later than February 28, 1996.

A. Federal Reserve Bank of Minneapolis (James M. Lyon, Vice President) 250 Marquette Avenue, Minneapolis, Minnesota 55480:

1. BNCCORP, Inc., Bismarck, North Dakota; to engage *de novo* in retaining and servicing certain loans, pursuant to § 225.25(b)(1) of the Board's Regulation Y. These activities will be conducted throughout the State of North Dakota.

Board of Governors of the Federal Reserve System, February 8, 1996.

Jennifer J. Johnson,

Deputy Secretary of the Board.

[FR Doc. 96-3225 Filed 2-13-96; 8:45 am]

BILLING CODE 6210-01-F

Capital Corp of the West; Acquisition of Company Engaged in Permissible Nonbanking Activities

The organization listed in this notice has given notice under § 225.23(a)(2) or (e) of the Board's Regulation Y (12 CFR 225.23(a)(2) or (e)) for the Board's approval under section 4(c)(8) of the Bank Holding Company Act (12 U.S.C. 1843(c)(8)) and § 225.21(a) of Regulation Y (12 CFR 225.21(a)) to acquire or control voting securities or assets of a company engaged in a nonbanking activity that is listed in § 225.25 of Regulation Y as closely related to banking and permissible for bank holding companies. Unless otherwise noted, such activities will be conducted throughout the United States.

The notice is available for immediate inspection at the Federal Reserve Bank indicated. Once the notice has been accepted for processing, it will also be available for inspection at the offices of the Board of Governors. Interested persons may express their views in writing on the question whether consummation of the proposal can ''reasonably be expected to produce

benefits to the public, such as greater convenience, increased competition, or gains in efficiency, that outweigh possible adverse effects, such as undue concentration of resources, decreased or unfair competition, conflicts of interests, or unsound banking practices.'' Any request for a hearing on this question must be accompanied by a statement of the reasons a written presentation would not suffice in lieu of a hearing, identifying specifically any questions of fact that are in dispute, summarizing the evidence that would be presented at a hearing, and indicating how the party commenting would be aggrieved by approval of the proposal.

Comments regarding this application must be received not later than February 28, 1996.

A. Federal Reserve Bank of San Francisco (Kenneth R. Binning, Director, Bank Holding Company) 101 Market Street, San Francisco, California 94105:

1. Capital Corp of the West, Merced, California; to engage in furnishing general economic information and advice, general economic statistical forecasting services and industry studies, pursuant to § 225.25 (b)(4)(iv) of the Board's Regulation Y; and in providing advice, including rendering fairness opinions and providing valuation services, in connection with mergers, acquisitions, divestitures, joint ventures, leveraged buyouts, recapitalizations, capital structurings, and financing transactions (including private and public financing and loan syndications); and conducting financial feasibility studies, pursuant to § 225.25 (b)(4)(vi) of the Board's Regulation Y. The geographic scope for these activities will be limited to Arizona, California, Oregon and Nevada.

Board of Governors of the Federal Reserve System, February 8, 1996.

Jennifer J. Johnson,

Deputy Secretary of the Board.

[FR Doc. 96-3226 Filed 2-13-96; 8:45 am]

BILLING CODE 6210-01-F

Robert H. Croak, et al.; Change in Bank Control Notices; Acquisitions of Shares of Banks or Bank Holding Companies

The notificants listed below have applied under the Change in Bank Control Act (12 U.S.C. 1817(j)) and § 225.41 of the Board's Regulation Y (12 CFR 225.41) to acquire a bank or bank holding company. The factors that are considered in acting on the notices are set forth in paragraph 7 of the Act (12 U.S.C. 1817(j)(7)).

The notices are available for immediate inspection at the Federal Reserve Bank indicated. Once the notices have been accepted for processing, they will also be available for inspection at the offices of the Board of Governors. Interested persons may express their views in writing to the Reserve Bank indicated for that notice or to the offices of the Board of Governors. Comments must be received not later than February 28, 1996.

A. Federal Reserve Bank of Kansas City (John E. Yorke, Senior Vice President) 925 Grand Avenue, Kansas City, Missouri 64198:

1. Robert H. and Linda K. Croak, Midwest City, Oklahoma; to acquire an additional 24.48 percent, for a total of 38.01 percent, of the voting shares of First Midwest Bancorp, Inc., Midwest City, Oklahoma, and thereby indirectly acquire First National Bank of Midwest City, Midwest City, Oklahoma.

Board of Governors of the Federal Reserve System, February 8, 1996.

Jennifer J. Johnson,

Deputy Secretary of the Board.

[FR Doc. 96-3227 Filed 2-13-96; 8:45 am]

BILLING CODE 6210-01-F

Federal Open Market Committee; Domestic Policy Directive of December 19, 1995.

In accordance with § 271.5 of its rules regarding availability of information (12 CFR part 271), there is set forth below the domestic policy directive issued by the Federal Open Market Committee at its meeting held on December 19, 1995.[1] The directive was issued to the Federal Reserve Bank of New York as follows:

The information reviewed at this meeting suggests a substantial slowing in the expansion of economic activity after a strong gain in the third quarter. Nonfarm payroll employment increased further in November, but the civilian unemployment rate edged up to 5.6 percent. Industrial production was little changed on average over October and November after a moderate rise in the third quarter. Total nominal retail sales rose somewhat on balance over October and November. Housing starts were down in October after a large increase in the third quarter. However, orders for nondefense capital goods point to substantial expansion of spending on business equipment in the near term, and nonresidential construction has risen appreciably further. Wage trends have been stable and consumer prices have risen relatively slowly on average in recent months.

Most market interest rates have declined slightly since the Committee meeting on November 15. In foreign exchange markets, the trade-weighted value of the dollar in terms of the other G-10 currencies has risen slightly on balance over the intermeeting period.

The substantial moderation in the growth of M2 and M3 since midsummer continued in November; however, for the year through November, M2 expanded at a rate in the upper half of its range for 1995 and M3 grew at a rate at the upper end of its range. Growth in total domestic nonfinancial debt has slowed somewhat in recent months but for the year to date remains around the midpoint of its monitoring range.

The Federal Open Market Committee seeks monetary and financial conditions that will foster price stability and promote sustainable growth in output. In furtherance of these objectives, the Committee at its meeting in July reaffirmed the range it had established on January 31-February 1 for growth of M2 of 1 to 5 percent, measured from the fourth quarter of 1994 to the fourth quarter of 1995. The Committee also retained the monitoring range of 3 to 7 percent for the year that it had set for growth of total domestic nonfinancial debt. The Committee raised the 1995 range for M3 to 2 to 6 percent as a technical adjustment to take account of changing intermediation patterns. For, 1996, the Committee established on a tentative basis the same ranges as in 1995 for growth of the monetary aggregates and debt, measured from the fourth quarter of 1995 to the fourth quarter of 1996. The behavior of the monetary aggregates will continue to be evaluated in the light of progress toward price level stability, movements in their velocities, and developments in the economy and financial markets.

In the implementation of policy for the immediate future, the Committee seeks to decrease slightly the existing degree of pressure on reserve positions. In the context of the Committee's long-run objectives for price stability and sustainable economic growth, and giving careful consideration to economic, financial, and monetary developments, slightly greater reserve restraint or slightly lesser reserve restraint would be acceptable in the

[1] Copies of the Minutes of the Federal Open Market Committee meeting of December 19, 1995, which include the domestic policy directive issued at that meeting, are available upon request to the Board of Governors of the Federal Reserve System, Washington, D.C. 20551. The minutes are published in the Federal Reserve Bulletin and in the Board's annual report.

intermeeting period. The contemplated reserve conditions are expected to be consistent with moderate growth in M2 and M3 over coming months.

By order of the Federal Open Market Committee, February 7, 1996.

Donald L. Kohn,

Secretary, Federal Open Market Committee.

[FR Doc. 96–3314 Filed 2–13–96; 8:45 am]

BILLING CODE 6210–01–F

FEDERAL TRADE COMMISSION

Granting of Request for Early Termination of the Waiting Period Under the Premerger Notification Rules

Section 7A of the Clayton Act, 15 U.S.C. 18a, as added by Title II of the Hart-Scott-Rodino Antitrust Improvements Act of 1976, requires persons contemplating certain mergers or acquisitions to give the Federal Trade Commission and the Assistant Attorney General advance notice and to wait designated periods before consummation of such plans. Section 7A(b)(2) of the Act permits the agencies, in individual cases, to terminate this waiting period prior to its expiration and requires that notice of this action be published in the Federal Register.

The following transactions were granted early termination of the waiting period provided by law and the premerger notification rules. The grants were made by the Federal Trade Commission and the Assistant Attorney General for the Antitrust Division of the Department of Justice. Neither agency intends to take any action with respect to these proposed acquisitions during the applicable waiting period.

TRANSACTIONS GRANTED EARLY TERMINATION BETWEEN: 011596 AND 012696

Name of acquiring person, name of acquired person, name of acquired entity	PMN No.	Date terminated
Exor Group S.A., Xerox Corporation, Constitution Re Corporation	95–1065	01/15/96
Sprint Corporation, Telephone and Data Systems, Inc. Voting Trust, Ohio RSA No. 1 Limited Partnership	96–0691	01/17/96
PETsMart, Inc., State Line Tack, Inc., State Line Tack, Inc	96–0739	01/17/96
Occidental Petroleum Corporation, Castle Harlan Partners II, L.P., INDSPEC Holding Corporation	96–0740	01/17/96
The Harper Group, Inc., Celadon Group, Inc., Celadon-Jacky Maeder Company	96–0725	01/18/96
Newcourt Credit Group Inc., CRA, Inc., CRA, Inc	96–0762	01/18/96
George Soros, Oscar and Zlata Foundation, Indigo, N.V	96–0764	01/18/96
NGC Corporation, John Joseph Sherman, LPG Services Group, Inc	96–0769	01/18/96
Mallinckrodt Group Inc., Liebel-Flarsheim Company, Liebel-Flarsheim Company	96–0103	01/19/96
Aurora Health Care, Inc., Memorial Hospital Corporation of Burlington, Memorial Hospital Corporation of Burlington	96–0709	01/19/96
The Sumitomo Bank, Limited, The Daiwa Bank, Limited, The Daiwa Bank, Limited	96–0743	01/19/96
PriCellular Corporation, Telephone and Data Systems, Inc. Voting Trust, Pennsylvania RSA No. 9 Limited Partnership	96–0778	01/19/96
Loews Corporation, Arethusa (Off-Shore) Limited, Arethusa (Off-Shore) Limited	96–0687	01/21/96
Bastion Capital Fund, L.P., Telemundo Group, Inc., Telemundo Group, Inc	96–0715	01/21/96
International Paper Company, Federal Paper Board Company, Inc., Federal Paper Board Company, Inc	96–0346	01/22/96
Royal Dutch Petroleum Company, Texaco Inc., Texaco Exploration and Production Inc	96–0377	01/22/96
Alco Standard Corporation, Jon M. Malinski, JMM Enterprises, Inc	96–0697	01/22/96
Paragon Trade Brands, Inc., Pope & Talbot, Inc., Pope & Talbot, Inc	96–0741	01/22/96
Kotobuki Fudosan Ltd., Compagnie Generale des Eaux (a French Company), Compagnie Generale des Eaux	96–0754	01/22/96
Jordan Industries, Inc., William Weksel, E.F. Johnson Components Division	96–0761	01/22/96
General Electric Company, E.I. du Pont de Nemours and Company, Conoco Inc	96–0779	01/22/96
Richard E. Rainwater, Magellan Health Services, Inc. (fka Charter Medical Corp), Magellan Health Services, Inc. (fka Charter Medical Corp)	96–0780	01/22/96
Mellon Bank Corporation, Fund American Enterprises Holdings, Inc., Source One Mortgage Services Corporation	96–0788	01/22/96
FORE Systems, Inc., Alantec Corporation, Alantec Corporation	96–0752	01/23/96
Mirage Resorts, Incorporated, Capital Gaming International, Inc., Crescent City Capital Development Corp., debtor in poss	96–0786	01/23/96
Clear Channel Communications, Inc., Fleet Financial Group, Inc., WOOD Radio Limited Partnership	96–0790	01/23/96
Heartland Wireless Communications, Inc., Three Sixty Corp., TechniVision, Inc	96–0796	01/23/96
Caterpillar Inc., Brown Group Holdings Limited (a British company), Brown Group Holdings Limited	96–0732	01/24/96
Cellular Communications of Puerto Rico, Inc., Cellular Communications of Puerto Rico, Inc., San Juan Cellular Telephone Company	96–0757	01/24/96
Enron Corp., Forest Oil Corporation, Forest Oil Corporation	96–0781	01/24/96
James W.F. Brooks, Polar Corp., Polar Corp	96–0783	01/24/96
International Speedway Corporation, Roger S. Penske, PSH Corp	96–0793	01/24/96
U.S. Office Products Company, William J. Costigan, Jr., National Ofice Supply, Inc	96–0807	01/24/96
United Technologies Corporation, Ray H. Siegfried II, TKI, Inc., d/b/a/ The NORDAM Group, Inc	96–0808	01/24/96
Kaiser Ventures Inc., Rober S. Penske, Penske Speedways Holding Corp	96–0812	01/24/96
PRECISmetals, Inc., William Blair Leveraged Capital Fund, L.P., Sherwood Holdings, Inc	96–0813	01/24/96
Memorial Health Foundation, Mountainside Hospital Healthcare, Inc., Mountainside Hospital Healthcare, Inc	96–0722	01/25/96
Memorial Health Foundation, Overlook Health System, Inc., Overlook Health System, Inc	96–0728	01/25/96
Wolseley plc, Lary Victor Maxey, Building Material Supply Company, Inc. and Building Mat	96–0776	01/25/96
Wolseley plc, Robert R. Chambers, Building Material Supply Company, Inc. and Building Mat	96–0777	01/25/96
Temple-Inland Inc., Kevin A. Budde, Western Cities Mortgage Corporation	96–0801	01/25/96
Temple-Inland Inc., Robert and Bettina Russell, Western Cities Mortgage Corporation	96–0811	01/25/96
First Data Corporation, PHH Corporation, NTS, Inc	96–0815	01/25/96
Thomas H. Lee Equity Fund III, L.P., HomeAmerica Capital, Inc., HomeAmerica Capital, Inc	96–0819	01/25/96
HFS Incorporated, Richard L. Schlott, Electronic Realty Associates, L.P	96–0823	01/25/96
Madison Dearborn Capital Partners, L.P., HomeAmerica Capital, Inc., HomeAmerica Capital, Inc	96–0827	01/25/96

TRANSACTIONS GRANTED EARLY TERMINATION BETWEEN: 011596 AND 012696—Continued

Name of acquiring person, name of acquired person, name of acquired entity	PMN No.	Date terminated
Bank of Boston Corporation, HomeAmerica Capital, Inc., HomeAmerica Capital, Inc	96–0828	01/25/96
Sprint Corporation, Global Partnership Corporation, Global Partnership Corporation	94–1765	01/26/96
France Telecom, Sprint Corporation, Sprint Corporation	94–1766	01/26/96
Deutsche Bundespost Telekom, Sprint Corporation, Sprint Corporation	94–1770	01/26/96
Deutsche Bundespost Telekom, Global Partnership Corporation, Global Partnership Corporation	94–1775	01/26/96
Pacific Scientific Company, Louis J. Petralli, Jr., Met One, Inc	96–0224	01/26/96
Echlin Inc., Robert A. Davis, Pilot Industries, Inc	96–0730	01/26/96
The Mead Corporation, Fosterlane Holdings Corporations, Evergreen Timberlands Corporation	96–0791	01/26/96
Pioneer Financial Services, Inc., Universal Fidelity Life Insurance Company, Universal Fidelity Life Insurance Company	96–0799	01/26/96
Prime Holding, Inc., Ackers P. Investment Company, Vibroplant U.S., Inc	96–0803	01/26/96
Sinclair Broadcast Group, Inc., Gerald J. Robinson, Flint T.V., Inc	96–0806	01/26/96
Principal Mutual Life Insurance Company, United HealthCare Corporation, MetraHealth Care Plan of St. Louis, Inc	96–0809	01/26/96
Harris Methodist Health System, Inc., Daughters of Charity National Health System, Inc., St. Paul Medical Center	96–0810	01/26/96
The Kaizen Breakthrough Partnership, L.P., LADD Furniture, Inc., Fournier Furniture, Inc	96–0814	01/26/96
Warburg, Pincus Ventures, L.P., Westinghouse Electric Corporation, The Knoll Group, Inc	96–0830	01/26/96
Jitney-Jungle Stores of America, Inc., McCarty-Holman Co., Inc., McCarty-Holman Co., Inc	96–0831	01/26/96
Jitney-Jungle Stores of America, Inc., Southern Jitney Jungle Company, Southern Jitney Jungle Company	96–0832	01/26/96
Bruckmann, Rosser, Sherrill & Co., L.P., Jitney-Jungle Stores of America, Inc., Jitney-Jungle Stores of America, Inc	96–0834	01/26/96
Windy Hill Pet Food Company L.L.C., H.J. Heinz Company, Heinz Pet Products Company	96–0837	01/26/96
Steuart Investment Company, The Community Center Fund II LP, The Community Center Fund II LP	96–0839	01/26/96
Dollar Tree Stores, Inc., Pamela J. Alper and Michael N. Alper, Terrific Promotions, Inc	96–0845	01/26/96
Metromedia International Group, Inc., Alliance Entertainment Corp., Alliance Entertainement Corp	96–0848	01/26/96
Worthington Industries Inc., William S. Dietrich, II Charitable Remainder Annuity Tr, Dietrich Industries, Inc.	96–0849	01/26/96

FOR FURTHER INFORMATION CONTACT: Sandra M. Peay or Renee A. Horton, Contact Representatives, Federal Trade Commission, Premerger Notification Office, Bureau of Competition, Room 303, Washington, D.C. 20580, (202) 326–3100.

By Direction of the Commission.

Donald S. Clark,

Secretary.

[FR Doc. 96–3264 Filed 2–13–96; 8:45 am]

BILLING CODE 6750–01–M

GENERAL SERVICES ADMINISTRATION

Criteria for Fixed Price Service Contracts

AGENCY: Office of the Chief Financial Officer, General Services Administration.

ACTION: Notice of Criteria.

SUMMARY: The General Services Administration issues payments via a fixed roll payment system process through the GSA Finance Division in Forth Worth, Texas, of fixed price recurring service contracts without the submission of invoices. Contracts must be fixed price for a period of at least two months and must not contain discount terms. Contracts are payable 30 days following completion of the service month. Contracts awarded to nonprofit workshops under the Javits-Wagner O'Day Act which are generally paid in 20 days and contracts awarded using commercial item procedures in Part 12 of the FAR do not qualify. Contracts on the fixed roll payment system may not be assigned to a financial institution.

FOR FURTHER INFORMATION CONTACT: Mike Gilmartin, Telephone number (202) 501–4444 (this is not a toll free number).

Dated: February 1, 1996.

Mike Gilmartin,

Chief, BCDP Payables and Cash Management Branch, Financial Information Control Division.

[FR Doc. 96–3220 Filed 2–13–96; 8:45 am]

BILLING CODE 6820–34–M

DEPARTMENT OF HEALTH AND HUMAN SERVICES

Administration for Children and Families

[Proposed Program Priorities—ACF/ACYF/RHYP 96–1]

Runaway and Homeless Youth Program: Fiscal Year (FY) 1996 Proposed Program Priorities

AGENCY: Family and Youth Services Bureau, Administration on Children, Youth, and Families (ACYF), Administration for Children and Families (ACF), HHS.

ACTION: Notice of Fiscal Year 1996 Proposed Runaway and Homeless Youth (RHY) Program Priorities for the following programs for runaway and homeless youth: Basic Center, Street Outreach for Runaway and Homeless Youth and the Transitional Living Program for Homeless Youth.

SUMMARY: The Family and Youth Services Bureau of the Administration on Children, Youth and Families is publishing proposed program priorities and soliciting comments from the public regarding programmatic activities in fiscal year 1996 for the following programs:

Runaway and Homeless Youth Basic Center Grant Program (BCP): The purpose of the Runaway and Homeless Youth Basic Center Grant Program is to provide financial assistance to establish or strengthen locally-controlled centers that address the immediate needs (e.g., outreach, temporary shelter, counseling, and aftercare services) of runaway and homeless youth and their families.

Street Outreach for Runaway and Homeless Youth: Grants will be awarded for street-based outreach and education and referral for runaway, homeless, and street youth who have been subjected to or are at risk of being subjected to sexual abuse.

Transitional Living Program for Homeless Youth (TLP): The purpose of the Transitional Living Program for

Homeless Youth is to support projects which provide long term shelter, skill training and support services in local communities to homeless youth to assist them in making a smooth transition to self-sufficiency and to prevent long-term dependency on social services.

The Family and Youth Services Bureau also administers the Drug Abuse Prevention Program (DAPP) which provides drug prevention and education services to runaway and homeless youth. At this time, neither the U.S. House of Representatives nor the U.S. Senate have proposed funding for this grant program in FY 1996. In the event that funds become available, applications for the program will be solicited and a grant competition will be held during FY 1996.

The proposed priorities for FY 1996 are similar to those of recent years in that the Department proposes to award 90 percent or more of the funds appropriated under the BCP and approximately 90 percent of the funds appropriated under the TLP to grantees providing direct services to runaway and homeless youth.

The proposed priorities are further similar to those of earlier years in that the Department proposes to award continuation funding to the National Communications System and to fund a number of program support activities.

Grants awarded under FYSB's discretionary activities in FY 1996 are subject to the availability of funds.

Central to all FYSB's programs and activities is a priority for a comprehensive youth development approach. Over the past several decades, the Federal government has established many programs designed to alleviate discrete problems identified among American youth. Examples are programs for school dropout prevention, juvenile delinquency prevention, abuse and neglect prevention, adolescent pregnancy prevention, youth gang prevention, drug abuse prevention, and compensatory programs to improve the performance of minority and non-English-speaking youth in the public schools. Among these many programs are the BCP, the DAPP, and the TLP.

A shared feature of all these programs is their emphasis on undesirable behavior, with a number of negative consequences. Youth ''problems'' are commonly used to define and blame, even to punish, the youth. Further, the labeling of a youth as a drug abuser or a delinquent may lead to interventions too narrow to take into account the full array of causes leading to the abuse or delinquency, such as parental neglect, school failure, or poverty. Practicing youth workers are well aware that ''single-problem'' youth are rare, and that interventions from many different perspectives, and supports, including funding, from many different sources, are required to effectively help troubled youth.

The disjointed services that often follow from this Federal pattern of categorical funding to correct undesirable behavior (funding that targets a single problem behavior of the youth) may be avoided if interventions are viewed from a ''developmental'' perspective which views adolescence and youth as the passage from the almost total dependence of the child into the independence and self-sufficiency of the young adult. The various emotional, intellectual and physical changes, stages, and growth spurts of the passage may be considered as the youth's natural, healthy responses to the challenges and opportunities provided by functional families, peers, neighborhoods, schools and churches.

The tasks of youth services providers are seen, thus, not as correcting the ''pathologies'' of troubled youth, but rather as providing for the successive ''needs'' of maturing individuals: the psychological need to develop a clear self-identity; the sociological need to resolve disagreements through talking and negotiating not through flight or fighting; the economic need to prepare for and enter into a career; and the familial needs for sharing, for trusting, for giving love and receiving love, for commitment, and for all that establishing a family entails. This developmental approach is fundamental to all of FYSB programs and activities.

a. Basic Center Program Grants

Approximately 340 Basic Center grants, of which about one-third will be competitive new starts and two-thirds will be non-competitive continuations, will be funded in FY 1996.

Eligible applicants for the new starts are current grantees with project periods ending in FY 1996 and otherwise eligible applicants not holding current grants. The applications will be reviewed by State, and awards will be made during the last quarter of FY 1996 (July–September 1996).

Section 385(a)(2) of the Act requires that 90 percent of the funds appropriated under Part A (The Runaway and Homeless Youth Grant Program) be used to establish and strengthen runaway and homeless youth Basic Centers.

b. Transitional Living Program Grants

Part B, Section 321 of the Runaway and Homeless Youth Act, as amended, authorizes grants to establish and operate transitional living projects for homeless youth. This program is structured to help older, homeless youth achieve self-sufficiency and avoid long-term dependency on social services. Transitional living projects provide shelter, skills training, and support services to homeless youth ages 16 through 21 for a continuous period not exceeding 18 months. It is projected that all potential FY 1996 TLP funds will be awarded in the form of continuation grants during the first and second quarter. In consequence, no applications for new start Transitional Living Program grants were solicited in FY 1995 for the use of FY 1996 funds. However, applications will be solicited in FY l996 for TLP grants to be awarded in the first quarter of FY l997.

Eligible applicants for the new starts are current grantees with project periods ending in FY 1996 and otherwise eligible applicants not holding current grants. The applications will be reviewed in a national competition, and awards will be made during the last quarter of FY 1996 (July–September 1996).

c. National Communications System

Part C, Section 331 of the Runaway and Homeless Youth Act, as amended, mandates support for a National Communications System to assist runaway and homeless youth in communicating with their families and with service providers. In FY 1994, a five-year grant was awarded to the National Runaway Switchboard, Inc., in Chicago, Illinois, to operate the system. Non-competitive continuation funding will be awarded to the grantee in FY 1996.

d. Street Outreach for Runaway and Homeless Youth

The Domestic Violence/Violence Against Women Act of the 1994 Crime Bill provides for education and prevention grants to reduce the sexual abuse of runaway, homeless, and street youth. Should FY 1996 appropriations become available, they will be used to fund agencies for street-based outreach as well as education and referral for runaway, homeless, and street youth who have been or at risk of being sexually abused.

e. Support Services for Runaway and Homeless Youth Programs

(1) Training and Technical Assistance

Part D, Section 342 of the Act authorizes the Department to make grants to statewide and regional nonprofit organizations to provide training and technical assistance

(T&TA) to organizations that are eligible to receive service grants under the Act. Eligible organizations include the Basic Centers authorized under Part A of the Act (The Runaway and Homeless Youth Grant Program) and the service grantees authorized under Part B of the Act (The Transitional Living Grant Program). Section 3511 of the Anti-Drug Abuse Act of 1988, which authorizes the Drug Abuse Prevention Program for Runaway and Homeless Youth (DAPP), also authorizes support for T&TA to runaway and homeless youth service providers. The purpose of this T&TA is to strengthen the programs and to enhance the knowledge and skills of youth service workers.

In FY 1994, the Family and Youth Services Bureau made ten Cooperative Agreement Awards, one in each of the ten Federal Regions, to provide T&TA to agencies funded to provide services to runaway and homeless youth. Each Cooperative Agreement is unique, being based on the characteristics and different T&TA needs in the respective Regions. Each has a five-year project period that will expire in FY 1999.

Non-competitive continuation funding will be awarded to the ten T&TA grantees in FY 1996.

(2) National Clearinghouse on Runaway and Homeless Youth

In June 1992, a five-year contract was awarded by the Department to establish and operate the National Clearinghouse on Runaway and Homeless Youth. The purpose of the Clearinghouse is to serve as a central information point for professionals and agencies involved in the development and implementation of services to runaway and homeless youth. To this end, the Clearinghouse:

- Collects, evaluates and maintains reports, materials and other products regarding service provision to runaway and homeless youth;
- Develops and disseminates reports and bibliographies useful to the field;
- Identifies areas in which new or additional reports, materials and products are needed; and
- Carries out other activities designed to provide the field with the information needed to improve services to runaway and homeless youth.

Non-competitive continuation funding will be awarded to sustain the Clearinghouse in FY 1996.

(3) Runaway and Homeless Youth Management Information System (RHYMIS)

In FY 1992, a contract was awarded to implement the Runaway and Homeless Youth Management Information System (RHYMIS) across three FYSB programs: the BCP, the TLP, and the DAPP. In FY 1993, using an existing computer-based, information gathering protocol, the contractor began providing training and technical assistance to these grantees in the use of the RHYMIS. The data generated by the system are used to produce reports and information regarding the programs, including information for the required reports to Congress on each of the three programs. The RHYMIS also serves as a management tool for FYSB and for the individual programs.

Non-competitive continuation funding for the RHYMIS will be an option in FY 1996.

(4) Monitoring Support for FYSB Programs

In FY 1992, FYSB began developing a comprehensive monitoring instrument and set of site visit protocols, including a peer-review component for the BCP, the TLP, and the DAPP. Pilot implementation of the instrument and related protocols began in FY 1993. Also in FY 1993 a new contract to provide logistical support for the peer review monitoring process was awarded, including nationwide distribution of the new materials. Use of the new instrument and peer review process during the first full year of operation has resulted in identification of a number of strengths and areas for improvement among individual grantees. These findings have been used by the Regional T&TA providers as a basis for their activities. In FY 1996 a new procurement for this activity will be awarded.

f. Research and Demonstration Initiatives

Section 315 of the Act authorizes the Department to make grants to States, localities, and private entities to carry out research, demonstration, and service projects designed to increase knowledge concerning and to improve services for runaway and homeless youth. These activities serve to identify emerging issues and to develop and test models which address such issues.

(1) Services for Youth in Rural Areas

Because of geographic distances, population density and, in some cases, cultural differences, it is difficult to provide effective services to runaway and homeless youth in rural areas. In many such areas, scarcity of funds and other resources precludes funding of separate, autonomous Basic Center programs. The need exists for innovative and effective models for the provision of runaway and homeless youth services in rural areas, including Indian reservations. The new models should make services accessible to youth without setting up inordinately expensive service agencies in low populated areas. In FY 1993, first-year funding was awarded to eight grants to develop such models. Non-competitive continuation funding was provided in FY 1994 and 1995. These programs will complete their efforts during FY 1996 and information on their activities and findings will be developed and distributed.

(2) Analysis, Synthesis, and Interpretation of New Information Concerning Runaway and Homeless Youth Programs

Over the past few years, considerable new knowledge and information has been developed concerning the runaway and homeless youth programs administered by FYSB, and concerning the youth and families served. The main sources of this new information are the Runaway and Homeless Youth Management Information System (RHYMIS), the results of RHY monitoring visits, and a number of evaluation studies underway or recently completed. The RHYMIS, monitoring reports, and the evaluation studies contain descriptions of FYSB's grantee agencies, along with detailed data on the youth and families served, such as demographic profiles, presenting problems, services provided, and service outcomes. There is need for analysis, synthesis, and interpretation of this new information that will be useful in development of RHY plans and policies for the Family and Youth Services Bureau.

A contract was awarded in FY 1995 to analyze and synthesize valuable data and to explore program and policy implications. The study will be developed within a context of the most significant, current comprehensive theories of youth development.

(3) Youth Development Framework

In FY 1995 a contract was awarded to develop a youth development framework from a theoretical perspective. This framework will be designed to enhance the capacity of policy and program developers, program managers, and youth services professionals to develop service models and approaches that will redirect youth in high risk situations toward positive pathways of development.

(4) Consolidated Youth Services Demonstration Grants

The Family and Youth Services Bureau now administers three programs targeting runaway and homeless youth:

the BCP, the TLP, and the Drug Abuse Prevention Program (DAPP). Each program was established independently by the Congress to address a specific need or problem related to runaway and homeless youth. Funds for each program are appropriated annually by the Congress and are awarded to individual grantees across the country following submission and review of separate applications. In practice, there is considerable overlap among the populations and problems as well as considerable overlap among the grantee-administrators of the local projects; some grantees administer two of the three programs (BCP and DAPP, for example) and a few administer all three programs.

The overlap among targeted youth populations and youth services grantees suggests that program efficiency and coordination might be improved by consolidating the three programs into one, setting up comprehensive youth services programs designed to address the broad range of needs of at-risk runaway and homeless youth populations. An obvious immediate benefit would be that applicants wishing to provide services in all three areas would have to submit only one application instead of the three now required.

To this end and subject to the availability of funds, ACYF may consider funding in FY 1996 four to six ''Consolidated Youth Services Demonstration Grants,'' each for a four-year project period and each at a funding level of $325,000 to $400,000 per year. Applicants would be invited to design and, if successful in the competition, to implement youth service models combining features of the BCP, the DAPP, and the TLP. Successful applicants would, in fact, be required to provide in their respective geographic areas the complete array of services mandated for the three programs and to coordinate these services through a single administration. In consequence, it would be appropriate to fund these demonstration grants from the regular runaway and homeless youth appropriations from the Congress. Each grantee would document the advantages and disadvantages of the consolidated approach and would participate in a comprehensive evaluation of the projects.

g. Priorities for Administrative Changes

A number of management or administrative changes will be implemented in the near future in order to effectuate a more streamlined process for soliciting applications, awarding grants and maintaining reasonable funding levels for grantee program operations. Those changes include the following:

- The Regional Offices have and will continue to play a significant role in the assessment of grant applications. This role includes Regional staff involvement (1) as chairpersons for peer review panels and (2) in conduct of administrative reviews of new start applications that take into account knowledge about the applicant's experience, effectiveness, and potential and of the geographic distribution of the grantees in their respective States and Regions. Final funding decisions will remain the responsibility of the Commissioner of the Administration on Children, Youth and Families.
- The Administration on Children and Families (ACF) will again change the deadline for receipt of a Runaway and Homeless Youth grant application from the postal date of the application to the actual receipt date of the application by ACF. Applicants should carefully examine receipt dates in this announcement to assure that they meet deadlines in the manner prescribed.
- Efforts will be continued to avoid the problems of gaps in financial support between the expiration of one grant and the beginning of a new grant for current grantees that are successful in competition.
- Where possible, FYSB will attempt to increase minimum grant funding levels to amounts sufficient to support the required youth services. However, no minimum levels will be established at this time and the recommendations of Regional staff will be considered in this matter. We suggest that all applicants examine carefully the program announcements to ensure that they request sufficient funds.

The closing time and date for receipt of comments is 4:30 p.m. (Eastern Time Zone) on April 15, 1996. Applications received after 4:30 p.m. (Eastern Time Zone) will be classified as late. Please address comments to: Olivia A. Golden, Commissioner, Administration on Children, Youth and Families. Attention: Family and Youth Services Bureau, P.O. Box 1182, Washington, D.C. 20013.

(Catalog of Federal Domestic Assistance Number 93.623, Runaway and Homeless Youth Program; and Number 93.550, Transitional Living Program for Homeless Youth)

Dated: February 6, 1996.

Olivia A. Golden,

Commissioner, Administration on Children, Youth and Families.

[FR Doc. 96–3299 Filed 2–13–96; 8:45 am]

BILLING CODE 4184–01–P

New and Pending Demonstration Project Proposals Submitted Pursuant to Section 1115(a) of the Social Security Act: December 1995 and January 1996

AGENCY: Administration for Children and Families, HHS.

ACTION: Notice.

SUMMARY: This notice lists new proposals for welfare reform and combined welfare reform/Medicaid demonstration projects submitted to the Department of Health and Human Services for the months of December, 1995 and January, 1996. It includes both those proposals being considered under the standard waiver process and those being considered under the 30 day process. Federal approval for the proposals has been requested pursuant to section 1115 of the Social Security Act. This notice also lists proposals that were previously submitted and are still pending a decision and projects that have been approved since December 1, 1995. The Health Care Financing Administration is publishing a separate notice for Medicaid only demonstration projects.

Comments: We will accept written comments on these proposals. We will, if feasible, acknowledge receipt of all comments, but we will not provide written responses to comments. We will, however, neither approve nor disapprove new proposals under the standard application process for at least 30 days after the date of this notice to allow time to receive and consider comments. Direct comments as indicated below.

ADDRESSES: For specific information or questions on the content of a project contact the State contact listed for that project.

Comments on a proposal or requests for copies of a proposal should be addressed to: Howard Rolston, Administration for Children and Families, 370 L'Enfant Promenade, SW., Aerospace Building, 7th Floor West, Washington DC 20447. Fax: (202) 205–3598 Phone: (202) 401–9220.

SUPPLEMENTARY INFORMATION:

I. Background

Under Section 1115 of the Social Security Act (the Act), the Secretary of Health and Human Services (HHS) may approve research and demonstration project proposals with a broad range of policy objectives.

In exercising her discretionary authority, the Secretary has developed a number of policies and procedures for reviewing proposals. On September 27, 1994, we published a notice in the

Federal Register (59 FR 49249) that specified (1) the principles that we ordinarily will consider when approving or disapproving demonstration projects under the authority in section 1115(a) of the Act; (2) the procedures we expect States to use in involving the public in the development of proposed demonstration projects under section 1115; and (3) the procedures we ordinarily will follow in reviewing demonstration proposals. We are committed to a thorough and expeditious review of State requests to conduct such demonstrations.

On August 16, 1995, the Secretary published a notice in the Federal Register (60 FR 42574) exercising her discretion to request proposals testing welfare reform strategies in five areas. Since such projects can only incorporate provisions included in that announcement, they are not subject to the Federal notice procedures. The Secretary proposed a 30 day approval process for those provisions. As previously noted, this notice lists all new or pending welfare reform demonstration proposals under section 1115. Where possible, we have identified the proposals being considered under the 30 day process. However, the Secretary reserves the right to exercise her discretion to consider any proposal under the 30 day process if it meets the criteria in the five specified areas and the State requests it or concurs.

II. Listing of New and Pending Proposals for the Months of December, 1995 and January, 1996

As part of our procedures, we are publishing a monthly notice in the Federal Register of all new and pending proposals. This notice contains proposals for the months of December, 1995 and January, 1996.

Project Title: California—Work Pays Demonstration Project (Amendment).

Description: Would amend Work Pays Demonstration Project by adding provisions to: reduce benefit levels by 10% (but retaining the need level); reduce benefits an additional 15% after 6 months on assistance for cases with an able-bodied adult; time-limit assistance to able-bodied adults to 24 months, and not increase benefits for children conceived while receiving AFDC.

Date Received: 3/14/94.

Type: AFDC.

Current Status: Pending.

Contact Person: Glen Brooks, (916) 657–3291.

Project Title: California—Assistance Payments Demonstration Project (Amendment).

Description: Would amend the Assistance Payments Demonstration Project by: exempting certain categories of AFDC families from the State's benefit cuts; paying the exempt cases based on grant levels in effect in California on November 1, 1992; and renewing the waiver of the Medicaid maintenance of effort provision at section 1902(c)(1) of the Social Security Act, which was vacated by the Ninth Circuit Court of Appeals in its decision in *Beno* v. *Shalala.*

Date Received: 8/26/94.

Type: Combined AFDC/Medicaid.

Current Status: Pending.

Contact Person: Bruce Wagstaff, (916) 657–2367.

Project Title: California—Work Pays Demonstration Project (Amendment).

Description: Would amend the Work Pays Demonstration Project by adding provisions to not increasing AFDC benefits to families for additional children conceived while receiving AFDC.

Date Received: 11/9/94.

Type: AFDC.

Current Status: Pending.

Contact Person: Bruce Wagstaff, (916) 657–2367.

Project Title: Florida—Family Responsibility Act.

Description: Statewide, would require dependent children and caretaker relatives under age 18 to remain in school; pay half the AFDC benefit increment for the first child conceived by an AFDC recipient and provide no cash benefits for a second or subsequent child; exclude from the AFDC budget child support payments for children subject to the family cap; require AFDC recipients not participating in JOBS or actively seeking employment to engage in 20 hours per week of community employment or work experience.

Date Received: 10/4/95.

Type: Combined AFDC/Medicaid.

Current Status: New.

Contact Person: Sallie P. Linton, (904) 921–5572.

Project Title: Georgia—Jobs First Project.

Description: In ten pilot counties, would replace AFDC payment with paid employment; extend transitional Medicaid to 24 months; eliminate 100 hour employment rule for eligibility determination in AFDC–UP cases.

Date Received: 7/5/94.

Type: AFDC.

Current Status: Pending (not previously published).

Contact Person: Nancy Meszaros, (404) 657–3608.

Project Title: Hawaii—Families Are Better Together.

Description: Statewide, would eliminate 100-hour, attachment to the work force, 30 day unemployment and principal wage earner criteria for AFDC–UP families.

Date Received: 5/22/95.

Type: AFDC.

Current Status: Pending.

Contact Person: Patricia Murakami, (808) 586–5230.

Project Title: Illinois—Six Month Paternity Establishment Demonstration.

Description: In 20 counties, would require the establishment of paternity, unless good cause exists, within 6 months of application or redetermination as a condition of AFDC and Medicaid eligibility for both mother and child; would deny Medicaid to children age 7 and under, exclude children from filing rules, and exempt Department from making protective payments to eligible children, when custodial parent has not cooperated in establishing paternity; delegate the establishment of paternity in uncontested cases to caseworkers who perform assistance payment or social service functions under title IV–A or XX.

Date Received: 7/18/95.

TITLE: AFDC/Medicaid.

Current Status: Pending.

Contact Person: Karan D. Maxson, (217) 785–3300.

Project Title: Indiana—Impacting Families Welfare Reform Demonstration—Amendments.

Description: Statewide, proposes expansions and amendments to current demonstration to impose a lifetime 24-month limit on cash assistance and categorical Medicaid eligibility (12 months for resident alien); allow 1 month AFDC credit (to a maximum of 24 at any one time) for each 6 consecutive months full-time employment; count each month of AFDC receipt from another state within the previous 3 years as 1 month against the lifetime limit; restrict permissible ''specified relatives'' for AFDC children and minor parents; extend AFDC, Medicaid, and food stamp fraud disqualification penalties; establish 3 unexcused absences per year as the statewide definition of unacceptable school attendance; provide a voucher equal to 50% of assistance amount for family cap child for goods and services related to child care; divert AFDC grants to subsidize child care costs; establish an option for an employed AFDC recipient to receive guaranteed child care or an AFDC payment equal to the family's benefit before employment; require a child's mother to establish paternity as a condition of eligibility for

the child and the caretaker; establish additional conditions of eligibility for AFDC; impose penalties for illegal drug use; base CWEP hours on the combined value of AFDC and Medicaid assistance; make JOBS volunteers subject to the same sanctions as mandatory participants; continue eligibility for AFDC recipients until countable income reaches 100% of the federal poverty guidelines; expand voluntary quit definition and penalties; impose income limits on transitional Medicaid and child care and limit each to 12 months in a person's lifetime; with some exceptions, deny Medicaid under all coverage provisions to those determined ineligible as a result of AFDC welfare reform provisions; restrict Medicaid payments made to employees with employer's health care benefits to the lesser of the employee's insurance premium or the amount the state would otherwise pay; and require minor parents to live with a legally responsible adult and count the income and resources of non-parent adults.

Date Received: 12/14/95.

Type: Combined AFDC/Medicaid.

Current Status: New.

Contact Person: James H. Hmurovich, (317) 232–4704.

Project Title: Kansas—Actively Creating Tomorrow for Families Demonstration.

Description: Would, after 30 months of participation in JOBS, make adults ineligible for AFDC for 3 years; replace $30 and ⅓ income disregard with continuous 40% disregard; disregard lump sum income and income and resources of children in school; count income and resources of family members who receive SSI; exempt one vehicle without regard for equity value if used to produce income; allow only half AFDC benefit increase for births of a second child to families where the parent is not working and eliminate increase for the birth of any child if families already have at least two children; eliminate 100-hour rule and work history requirements for UP cases; expand AFDC eligibility to pregnant women in 1st and 2nd trimesters; extend Medicaid transitional benefits to 24 months; eliminate various JOBS requirements, including those related to target groups, participation rate of UP cases and the 20-hour work requirement limit for parents with children under 6; require school attendance; require minors in AFDC and NPA Food Stamps cases to live with a guardian; make work requirements and penalties in the AFDC and Food Stamp programs more uniform; and increase sanctions for not cooperating with child support enforcement activities.

Date Received: 7/26/94.

Type: Combined AFDC/Medicaid.

Current Status: Pending.

Contact Person: Faith Spencer, (913) 296–0775.

Project Title: Louisiana—Individual Responsibility Project.

Description: Statewide, would limit AFDC benefits to 24 months out of a 60 month period for able-bodied recipients with extensions where the individual has been actively seeking employment, where job availability is unfavorable, where the individual loses a job for factors unrelated to his job performance, or where the individual requires up to one year to complete employment related education or training; require each child to attend school and be immunized or the child will be removed from the budget group; and applies a full family sanction where the parent has declined or refused an opportunity for full-time employment, without good cause.

Date Received: 9/22/95.

Type: AFDC.

Current Status: Pending.

Contact Person: Sammy Guillory, (504) 342–4089.

Project Title: Maine—Welfare to Work Program.

Description: Statewide, would require caretaker relatives to sign a family contract; require participation in parenting classes and health care services; provide one-time vendor payments in lieu of AFDC for the purpose of obtaining/retaining employment; provide voucher payments to both married and unmarried minor parents; limit JOBS exemptions; expand eligibility for Transitional Medicaid and Child Care and replace sliding-scale fees with flat-rate fees; reduce Transitional Medicaid reporting requirements; disregard entire value of one vehicle; and apply any federal savings to the JOBS program services. In selected sites, implement ASPIRE-Plus, a subsidized employment program, would cash out food stamps, divert AFDC benefits and pass through all child support collected to families who participate in ASPIRE-Plus.

Date Received: 9/20/95.

Type: AFDC/Medicaid.

Current Status: Pending.

Contact Person: Susan Dustin, (207) 287–3104.

Project Title: Mississippi—A New Direction Demonstration Program—Amendment.

Description: Requests amendments to the Work First Component (operating in Adams, Harrison, Hinds, Jones, Lee and Washington counties) of the Mississippi New Direction Demonstration Project which would: provide transitional Medicaid and child care to AFDC families even if they have not received AFDC for at least three months; and permit JOBS sanctions to be imposed for exempt clients that volunteer for JOBS and then drop out without good cause.

Date Received: 11/20/95.

Type: Combined AFDC/Medicaid.

Current Status: Pending.

Contact Person: Larry Temple, (601) 359–4476.

Project Title: New Hampshire—Earned Income Disregard Demonstration Project.

Description: AFDC applicants and recipients would have the first $200 plus ½ the remaining earned income disregarded.

Date Received: 9/20/93.

Type: AFDC.

Current Status: Pending.

Contact Person: Avis L. Crane, (603) 271–4255.

Project Title: New Hampshire—New Hampshire Employment Program and Family Assistance Program.

Description: Statewide, would replace AFDC with Employment Program administered by both Employment Security Agency and Family Assistance Program; require job search and other employment-related activities for first 26 weeks of receipt followed by work-related activities for 26 weeks; eliminate JOBS target group funding requirement and change JOBS reporting requirements; require recipients attending post-secondary or part-time vocational training to participate in work-related activities; eliminate JOBS services priority for volunteers; establish limits for provision of transportation and other JOBS services based on activity and local conditions; eliminate remoteness as exemption from JOBS; require non-custodial parents to participate in JOBS; increase earned income disregard to 50%; eliminate AFDC-UP eligibility requirements; allow transitional case management for up to one year; raise resource limit to $2,000 and exclude one vehicle and life insurance policies; pass through child support directly to family; take SSI income into account in determining eligibility/payment; eliminate conciliation and apply JOBS sanction of 50% of AFDC benefits for three months followed by no payment for three months, allowing option to increase initial sanction up to 100%; exempt pregnant women from JOBS only during third trimester; for minor parents cases, include in assistance unit any parent or sibling living in the home; eliminate gross income test; disregard educational grants; allow emergency assistance for

families with employment-related barriers; allow State to eliminate the certificate option for child care and development block grant funds and use of these funds for capital improvement; eliminate ceiling on At Risk Child Care funds; provide that FFP for AFDC not be reduced during life of demonstration; fund computer system modifications at 80% FFP; require pregnant recipients to cooperate with child support; require that AFDC apply for Medicaid as a unit and not individually; eliminate requirement of receipt of AFDC for 3 of last 6 months in order to receive transitional Medicaid; and allow State to require that some individuals be assigned to a managed care program; substitute outcome measures for JOBS participation rates; change participation requirements for parents with children under 6, UP recipients and minors; establish a medical deduction; increase the sanction for non-cooperation with child support; exempt individuals with significant employment barriers from JOBS; treat lump sum income and all real property, except a home, as a resource; and use 20% of gross earned income as a Medicaid disregard. Also contains various Food Stamp waivers.

Date Received: 9/18/95.

Type: AFDC.

Current Status: Pending.

Contact Person: Marianne Broshek, (603) 271–4442.

Project Title: New Hampshire—New Hampshire Employment Program.

Description: In three pilot sites, would require work after 6 months of AFDC receipt; eliminate the exemption from JOBS for women in the second trimester of pregnancy; eliminate the JOBS exemption for caretaker of a child under 3 but not less than 1 year of age; replace the earned income disregard of $90 and $30 and ⅓ with a 50% disregard which is not time-limited; raise the resource limit for recipients to $2,000; disregard full value of one vehicle per adult for applicants and recipients; apply a full family sanction voluntarily quitting a job or refusing to accept a job; apply a sanction of reducing the payment standard by 30% for one month for failure to comply with JOBS in the first instance, by 60% in the second instance for one month, and in the third instance apply a full-family sanction for three months or until compliance; and require non-custodial parents to participate in JOBS.

Date Received: 10/6/95.

Type: AFDC.

Current Status: Pending.

Contact Person: Marianne Broshek, (603) 271–4442.

Project Title: North Carolina—Work First Program.

Description: Statewide would eliminate increase in AFDC benefits resulting from a birth of a child, limit JOBS exemptions, require a self-sufficiency contract, and limit AFDC receipt to 24 cumulative months. Families who reach the time limit could not reapply for 3 years. The contract would require: cooperation with child support; child immunizations and medical check-ups; school attendance; and that teen parents live with a parent/adult and graduate from high school. Failure to sign the contract would result in denial of the AFDC application. Failure to comply would result in the loss of the adult's AFDC benefits and (starting with the second sanction) Medicaid coverage for a minimum of: 3 months for the first sanction, 3 months for the second, 6 months for the third, and 3 years for the fourth. The State would offer new applicants a one-time payment in lieu of AFDC; expand AFDC–UP eligibility; raise the resource limit to $3,000 and the vehicle asset limit to $5,000 for AFDC and Food Stamps; and provide for automatic food stamps eligibility for AFDC-eligible families.

Date Received: 9/20/95.

Type: AFDC/Medicaid.

Current Status: Pending.

Contact Person: Kevin Fitzgerald, (919) 733–3055.

Project Title: North Carolina—Cabarrus County Work Over Welfare Demonstration Project.

Description: In Cabarrus County, would require AFDC and Food Stamps applicants and recipients, with exemptions, to sign an agreement to participate in employment and training for up to 40 hours per week; would divert AFDC and Food Stamps benefits to private employers to supplement wages; and would disregard those wages for AFDC, Food Stamps, and Medicaid eligibility (for NPA participants). Also, would extend the $30 and ⅓ disregard to 2 years for unsubsidized earnings. Individuals who do not comply would be denied AFDC, Food Stamps, and Medicaid (unless pregnant) according to the following schedule: first, until compliance; second: for a minimum of 4 months; and third and subsequently: for a minimum of 8 months. Adults who do not sign an agreement would be denied AFDC, Food Stamps, and Medicaid (unless pregnant) until they sign.

Date Received: 10/5/95.

Type: AFDC/Medicaid.

Current Status: Pending.

Contact Person: Kevin Fitzgerald, (919) 733–3055.

Project Title: Ohio—Ohio First.

Description: Statewide, would replace current earned income disregards with $250 and ½ for twelve months for recipients; eliminate the work history requirement for married parents in AFDC–UP cases; eliminate 100-hour rule for AFDC–UP; disregard of stepparent income for four months; increase the vehicle asset limit; use established vacancies for subsidized employment slots; require applicant job search as a condition of family eligibility; maintain food stamp benefit levels when the AFDC benefit is reduced as a result of sanction; impose progressive sanctions for noncompliance with JOBS leading to whole family sanctions; establish that failure to comply with JOBS equates to failure to comply with work program requirements under the Food Stamp Program; limit AFDC eligibility to 36 months out of any 60 month period, unless exempt; allow the IV–D agency to determine good cause for noncooperation with Child Support Enforcement; change penalty for failure to cooperate with Child Support provisions to include a whole family sanction if the failure continues for two years; change penalty for fraud to include ineligibility for all assistance unit members until payments received fraudulently have been repaid; require development and signing of a self-sufficiency contract as a condition of eligibility for the assistance unit; require pregnant women receiving Medicaid to participate in substance abuse screening as part of prenatal care; implement sanctions for failure to cooperate with substance abuse screening leading to whole family sanctions.

Date Received: 10/27/95.

Type: AFDC/Medicaid.

Current Status: Pending.

Contact Person: Joel Rabb, (614) 466–3196.

Project Title: Oklahoma—Welfare Self-Sufficiency Initiative.

Description: In four pilots conducted in five counties each, would (1) extend transitional child care to up to 24 months; (2) require that all children through age 18 be immunized and require that responsible adults with preschool age children participate in parent education or enroll the children in Head Start or other preschool program; (3) not increase AFDC benefits after birth of additional children, but provide voucher payment for the increment of cash benefits that would have been received until the child is two years old; and (4) pay lesser of AFDC benefit or previous state of residence or Oklahoma's for 12 months for new residents.

Date Received: 10/27/95.
Type: AFDC.
Current Status: Pending.
Contact Person: Raymond Haddock, (405) 521–3076.

Project Title: Oregon—Oregon Option.
Description: As a statewide project, would incorporate waivers already approved in 1992 for JOBS Welfare Program and in 1994 for the JOBS Plus Demonstration with previously pending waiver requests to increase vehicle asset limit and extend transitional child care. Requests guaranteed level of federal funding, with funds not used for benefits to be used for other community support or prevention programs. Also would, with some exceptions, limit receipt of AFDC benefits to no more than 24 out of 84 months for families with employable parents; allow case manager to determine JOBS exemptions on an individual basis; eliminate the time restrictions on job search; impose progressive sanctions, leading to full-family ineligibility, for non-compliance with JOBS; require ineligible alien parents of AFDC children to participate in JOBS; require counseling for recipients with substance abuse problems; require teen parents to live in an adult-supervised setting; discontinue the AFDC–UP program from June through September each year and eliminate the 100-hour rule and work history requirements; increase asset limit to $2,500 for non-JOBS participants and $10,000 for JOBS participants, and treat lump-sum payments as an asset; require annual AFDC eligibility redeterminations; modify the rules for potential liability under Electronic Benefit Transfer.
Date Received: 7/10/95.
Type: AFDC/Medicaid.
Current Status: Pending.
Contact Person: Jim Neely, (503) 945–5607.

Project Title: Oregon—Expansion of the Transitional Child Care Program.
Description: Provide transitional child care benefits without regard to months of prior receipt of AFDC and provide benefits for 24 months.
Date Received: 8/8/94.
Type: AFDC.
Current Status: Pending.
Contact Person: Jim Neely, (503) 945–5607.

Project Title: Oregon—Increased AFDC Motor Vehicle Limit.
Description: Would increase automobile asset limit to $9000.
Date Received: 11/12/93.
Type: AFDC.
Current Status: Pending.
Contact Person: Jim Neely, (503) 945–5607.

Project Title: Pennsylvania—School Attendance Improvement Program.
Description: In 7 sites, would require school attendance as condition of eligibility..
Date Received: 9/12/94.
Type: AFDC.
Current Status: Pending.
Contact Person: Patricia H. O'Neal, (717) 787–4081.

Project Title: Pennsylvania—Savings for Education Program.
Description: Statewide, would exempt as resources college savings bonds and funds in savings accounts earmarked for vocational or secondary education and disregard interest income earned from such accounts..
Date Received: 12/29/94.
Type: AFDC.
Current Status: Pending.
Contact Person: Patricia H. O'Neal, (717) 787–4081.

Project Title: South Carolina—Family Independence Program.
Description: Statewide, would, with exceptions, time limit AFDC benefits to families with able bodied adults to 24 months out of 120 months, not to exceed 60 months in a lifetime; eliminate increase in AFDC benefit resulting from birth of children 10 or more months after the family begins AFDC receipt, but provide benefits to such children in the form of vouchers for goods and services permitting child's mother to participate in education, training, and employment-related activities; eliminate deprivation requirements, principal earner provisions, work history requirements, and 100-hour rule for AFDC-UP; increase AFDC resource limit to $2,500 and disregard as resources one vehicle with a market value up to $10,000, the balance in an Individual Development Account (IDA) up to $10,000, and the cash value of life insurance; disregard from income up to $10,000 in lump sum payments deposited in an IDA within 30 days of receipt, earned income of children attending school, and interest and dividend income up to $400; require participation in a family skills training program; require certain AFDC recipients to submit to random drug tests and/or participate in alcohol or drug treatment; require children to attend school; increase amount of child support passed through to AFDC recipients; require more extensive information for child support enforcement purposes; modify JOBS exemptions and good cause criteria, and increase sanctions for non-compliance; make job search a condition of eligibility; allow non-custodial parents of AFDC children to participate in JOBS; pay transitional grant equaling 3 percent of the maximum family grant following employment; and provide transitional grant Medicaid and child care for 12 months from the date of employment for cases previously closed due to time limit.
Date Received: 6/12/95.
Type: AFDC.
Current Status: Pending.
Contact Person: Linda Martin (804) 737–6010.

Project Title: Texas—Achieving Change for Texans.
Description: Statewide, would implement requirement for a personal responsibility agreement which addresses issues such as child support cooperation, early medical screening for children, work requirements, drug and alcohol abuse, school attendance, and parenting skills training; would limit the caretaker exemption from employment services, disregard the earned income and resources from earnings of a child, set resource limits which promote independence from AFDC, eliminate work history and 100-hour rules for otherwise eligible two-parent families. In Bexar County would time-limit AFDC benefits to 12, 24, and 36 months depending on education and job experience, with extensions of the time-limit based on severe personal hardship, or in cases where the State could not provide supportive services, or the where the local economy was in such state that the recipient could not reasonably be expected to find employment, if State funds are available to continue assistance. Transitional Medicaid and child care services would be provided to individuals who exhaust their time-limited cash benefits. In two metropolitan statistical areas establish Individual Development Accounts to promote the transition to independence from AFDC, through allowable account deductions for education, business start-up costs and the like. In Fort Bend County would allow at recipient option, one-time AFDC cash emergency assistance payments of $1,000 in lieu of ongoing regular AFDC payments with prohibition from applying for regular AFDC for a period of 12 months from date of receipt. In Dallas-Fort Worth would require electronic imaging (fingerprinting combined with photographic identification).
Date Received: 10/6/95.
TItle: AFDC/Medicaid.
Current Status: Pending.
Contact Person: Kent Gummerman, (512) 438–3743.

Project Title: Utah—Untitled.
Description: Statewide, would exclude the value of a vehicle for AFDC

recipient families, including those also receiving Food Stamps. Would not apply to initial eligibility determination.

Date Received: 10/3/95.

Type: AFDC.

Current Status: Pending.

Contact Person: Bill Biggs, (801) 538–4337.

III. Listing of Approved Proposals Since December 1, 1995

Project Title: California—School Attendance Demonstration Project.

Contact Person: Bruce Wagstaff, (916) 657–2367.

Project Title: Connecticut—Reach for Jobs First (a modification of previously approved Fair Chance Demonstration).

Contact Person: Nancy Wiggett, (203) 424–5329.

IV. Requests for Copies of a Proposal

Requests for copies of an AFDC or combined AFDC/Medicaid proposal should be directed to the Administration for Children and Families (ACF) at the address listed above. Questions concerning the content of a proposal should be directed to the State contact listed for the proposal.

(Catalog of Federal Domestic Assistance Program, No. 93562; Assistance Payments—Research)

Dated: February 7, 1996.

Karl Koerper,

Director, Division of Economic Independence, Office of Planning, Research and Evaluation.

[FR Doc. 96–3300 Filed 2–13–96; 8:45 am]

BILLING CODE 4184–01–P

Centers for Disease Control and Prevention

CDC WONDER Information Systems

AGENCY: Centers for Disease Control and Prevention (CDC), Department of Health and Human Services.

ACTION: Notice of availability.

SUMMARY: This notice announces the availability of three CDC WONDER information systems, effective February 15, 1996. This notice is in compliance with OMB Circular A–130 Transmittal 2, Management of Federal Information Resources to provide adequate notice when initiating, substantially modifying, or terminating significant information dissemination products.

EFFECTIVE DATE: February 15, 1996.

FOR FURTHER INFORMATION CONTACT: Dianne Wylie, Assistant Chief, Public Health Information Systems Branch, Information Resources Management Office, Centers for Disease Control and Prevention (CDC), 4770 Buford Highway, NE., Mailstop F–51, Atlanta, Georgia 30341–3724, telephone (770) 488–7510.

SUPPLEMENTARY INFORMATION: (1) ''CDC WONDER for the PC'' is a microcomputer-based information and communications system that provides menu-driven access to more than 25 public health databases, including data on mortality, morbidity, hospitalizations, and documents on CDC health policies. A microcomputer and modem are required. Software and manuals may be ordered from USD, 2075 A West Park Place, Stone Mountain, Georgia 30087, telephone (770) 469–4098, fax (770) 469–0681. To order product literature and registration forms telephone (770) 469–0503. The full package WONDER User ID, software, and manual costs $50.00 (product number: USDCDCWS); documentation only is $25.00 (product number: USDCDCMO); a user account (ID and Password) only is $23.00 (product number: USDCDCUA); diskettes only are $10.00 (product number: USDCDCDO). The training video ''Cafe WONDER'' costs $19.95 (product number: USDCDCV).

Employees of State and local health departments may obtain User ID's only free of charge. State/local health department employees should mail a completed CDC WONDER user registration form along with a letter on official health department stationery to CDC WONDER User Support, 4770 Buford Highway, Mailstop F–51, Atlanta, Georgia 30341. The letter should state that, as an employee of the health department, individuals are requesting that CDC provide a CDC WONDER User ID at no charge. Note: (1) faxed letters cannot be accepted; and (2) no software will accompany these User IDs. Health department staff who receive a User ID in this way will need to acquire a copy of the WONDER software and documentation from a colleague, or by purchasing them from USD.

(2) ''CDC WONDER on the Web'' is an Internet information system that provides menu-driven access to more than 25 public health databases, including data on mortality, morbidity, hospitalizations, and documents on CDC health policies. It may be accessed at http://wonder.cdc.gov. A Web browser and access to the Internet is required. There are no user fees.

(3) ''The CDC Prevention Guidelines on CD–ROM'' is a compact disk that provides rapid access to one of the databases in CDC WONDER on the Web. This database contains more than 400 documents containing authoritative recommendations from CDC on a wide variety of public health topics. The documents range in length from a few pages to several hundred. The CD may be ordered for $49.95 from USD, 2075 A West Park Place, Stone Mountain, Georgia 30087, telephone (770) 469–4098; fax (770) 469–0681.

Dated: February 8, 1996.

Joseph R. Carter,

Acting Associate Director for Management and Operations Centers for Disease Control and Prevention (CDC).

[FR Doc. 96–3260 Filed 2–13–96; 8:45 am]

BILLING CODE 4163–18–P

Clinical Laboratory Improvement Advisory Committee (CLIAC), Meeting

In accordance with section 10(a)(2) of the Federal Advisory Committee Act (Pub. L. 92–463), the Centers for Disease Control and Prevention (CDC) announces the following committee meeting:

Name: Clinical Laboratory Improvement Advisory Committee.

Times and Dates: 2–5 p.m., March 5, 1996; 8 a.m.–4:30 p.m., March 6, 1996.

Place: CDC, Auditorium B, Building 2, 1600 Clifton Road, NE, Atlanta, Georgia 30333.

Status: Open to the public, limited only by the space available.

Purpose: This committee is charged with providing scientific and technical advice and guidance to the Secretary of Health and Human Services, the Assistant Secretary for Health, and the Director, CDC, regarding the need for, and the nature of, revisions to the standards under which clinical laboratories are regulated; the impact of proposed revisions to the standards; and the modification of the standards to accommodate technological advances.

Matters To Be Discussed: The agenda will include an orientation for new members regarding the roles and responsibilities of an advisory committee member; a CDC update on the status of the publication of proposed rules for cytology, Accurate and Precise Technology, and waiver; a Health Care Financing Administration update on implementation of the Clinical Laboratory Improvement Amendments; a Federal Drug Administration update; and presentations on the use of automated cytology instruments.

Demonstrations will be provided of computer-based cytology proficiency testing (PT) developed in cooperative agreement with CDC. A major impediment in making cytology PT available on a national basis has been and continues to be the difficulty in obtaining a sufficient number of properly referenced glass slides. Computer-based programs offer the advantage of providing for the accumulation and assembly of sufficient numbers of well-documented, referenced cytology preparations that can be used for testing individuals in a consistent and uniform manner. In December 1993, the CLIAC recommended that studies be conducted to evaluate the effectiveness of

both glass slide PT programs and programs employing alternative media, including computer-based PT programs.

CLIAC solicits oral and written testimony on the use of computer-based cytology PT programs. Requests to make an oral presentation should be submitted in writing to the contact person listed below by close of business, March 1, 1996. Written comments should not exceed five single-spaced, typed pages in length and should be received by the contact person listed below by close of business, February 29, 1996.

Agenda items are subject to change as priorities dictate.

For Further Information Contact: John C. Ridderhof, Dr. P.H., Division of Laboratory Systems, Public Health Practice Program Office, CDC, 4770 Buford Highway, NE., Mailstop G–25, Atlanta, Georgia 30341–3724, telephone (770) 488–7660, Fax (770) 488–7663.

Dated: February 8, 1996.

Carolyn J. Russell,

Director, Management Analysis and Services Office Centers for Disease Control and Prevention.

[FR Doc. 96–3244 Filed 2–13–96; 8:45 am]

BILLING CODE 4163–18–M

Food and Drug Administration

[Docket No. 91N–0428]

Briefing Document for Biological Response Modifiers Advisory Committee; Availability

AGENCY: Food and Drug Administration, HHS.

ACTION: Notice.

SUMMARY: The Food and Drug Administration (FDA) is announcing the availability of a draft document entitled ''Addendum to the Points to Consider on Human Somatic Cell and Gene Therapy (1991).'' This draft addendum is being made available as briefing material for the February 1996 Biological Response Modifiers Advisory Committee meeting. This action is being taken to ensure that all interested parties are aware of the information in the document that will be the subject of the committee's discussion.

DATES: Written comments by March 28, 1996.

ADDRESSES: Submit written requests for single copies of the draft Points to Consider (PTC) addendum to the Division of Congressional and Public Affairs (HFM–11), Center for Biologics Evaluation and Research (CBER), Food and Drug Administration, 1401 Rockville Pike, Rockville, MD 20852–1448. Send one self-addressed adhesive label to assist that office in processing your requests. The document may also be obtained by mail, or FAX by calling the CBER Voice Information System at 1–800–835–4709.

Persons with access to the INTERNET may obtain the document in several ways. Users of ''Web Browser'' software, such as Mosaic, Netscape, or Microsoft Internet Explorer may obtain this document via the World Wide Web by using the following Uniform Resource Locators:

http://www.fda.gov/cber/cberftp.html

ftp://ftp.fda.gov/CBER/

The document may also be obtained via File Transfer Protocol (FTP). Requesters should connect to FDA's FTP Server, FTP.FDA.GOV (192.73.61.21). CBER documents are maintained in a subdirectory called ''CBER'' on the server. Logins with the user name of anonymous are permitted, and the user's e-mail address should be sent as the password. The ''READ.ME'' file in that subdirectory describes the available documents which may be available as an ASCII text file (*.TXT), or a WordPerfect 5.1 or 6.x document (*.w51,wp6), or both. Finally, the document can be obtained by ''bounce-back e-mail''. A message should be sent to: ''GTSA@A1.CBER.FDA.GOV''.

Submit written comments on the draft PTC addendum to the Dockets Management Branch (HFA–305), Food and Drug Administration, 12420 Parklawn Dr., rm. 1–23, Rockville, MD 20857. Two copies of any comments are to be submitted, except that individuals may submit one copy. Requests and comments should be identified with the docket number found in brackets in the heading of this document. A copy of the draft PTC addendum and received comments are available for public examination in the Dockets Management Branch between 9 a.m. and 4 p.m., Monday through Friday.

FOR FURTHER INFORMATION CONTACT: Suzanne L. Epstein, Center for Biologics Evaluation and Research (HFM–521), Food and Drug Administration, 1401 Rockville Pike, Rockville, MD 20852–1448, 301–827–0450.

SUPPLEMENTARY INFORMATION: FDA is announcing the availability of briefing material being supplied to the advisory committee as background information for the meeting. The draft PTC addendum is being made available as briefing material prior to the advisory committee meeting to ensure that all interested parties have an opportunity to obtain and review the material in advance of the meeting. A notice announcing the February 1996 Biological Response Modifiers Advisory Committee meeting and agenda was published in the Federal Register of January 31, 1996 (61 FR 3427 at 3428).

In the Federal Register of November 29, 1991 (56 FR 61022), FDA announced the availability of a draft PTC document entitled ''Points To Consider in Human Somatic Cell Therapy and Gene Therapy.'' At that time, most gene therapy proposals involved ex vivo use of retroviral vectors to transduce cultured cells, which were then administered to patients. Since that time, the range of proposals has expanded to include additional classes of vectors and also the in vivo use of vectors (direct vector administration to patients). Accordingly, FDA has drafted an addendum to the 1991 PTC in Human Somatic Cell and Gene Therapy that includes current information regarding the production, testing, and administration of recombinant vectors for gene therapy. Prior to making a draft PTC addendum available for industry use, FDA is presenting the issues discussed in the document at the next advisory committee meeting.

As with other PTC documents, FDA does not intend the draft PTC addendum to be all-inclusive and cautions that not all information may be applicable to all situations. The draft PTC addendum is intended to provide information and does not set forth requirements. FDA anticipates that manufacturers and other interested parties may develop alternative methods and procedures, and discuss them with FDA. FDA recognizes that advances will continue in the area of somatic cell and gene therapy, and FDA intends to update and revise the document in order to improve its usefulness. The draft PTC addendum does not bind FDA and does not create or confer any rights, privileges, or benefits on or for any person, but is intended merely for guidance.

Comments received from the meeting and comments submitted to the Dockets Management Branch will be considered in determining whether revision of the draft PTC addendum is warranted. At a later date after the meeting, a Federal Register notice will be published to announce the availability of the PTC addendum for industry use. The PTC addendum will provide CBER's current thinking regarding issues related to gene therapy.

The briefing document and received comments may be seen in the Dockets Management Branch (address above) between 9 a.m. and 4 p.m., Monday through Friday.

Dated: February 8, 1996.

William K. Hubbard,

Associate Commissioner for Policy Coordination.

[FR Doc. 96–3322 Filed 2–9–96; 3:00 pm]

BILLING CODE 4160–01–F

[Docket No. 96G–0035]

Solvay Enzymes, Inc.; Filing of Petition for Affirmation of GRAS Status

AGENCY: Food and Drug Administration, HHS.

ACTION: Notice.

SUMMARY: The Food and Drug Administration (FDA) is announcing that Solvay Enzymes, Inc., has filed a petition (GRASP 6G0420) proposing to affirm that the use of dextranase enzyme preparation derived from *Chaetomium gracile* is generally recognized as safe (GRAS) in cane and beet sugar processing.

DATES: Written comments by April 29, 1996.

ADDRESSES: Submit written comments to the Dockets Management Branch (HFA–305), Food and Drug Administration, 12420 Parklawn Dr., rm. 1–23, Rockville, MD 20857.

FOR FURTHER INFORMATION CONTACT: Martha D. Peiperl, Center for Food Safety and Applied Nutrition (HFS–217), Food and Drug Administration, 200 C St. SW., Washington, DC 20204, 202–418–3077.

SUPPLEMENTARY INFORMATION: Under the Federal Food, Drug, and Cosmetic Act (secs. 201(s) and 409(b)(5) (21 U.S.C. 321(s) and 348(b)(5)) and the regulations for affirmation of GRAS status in § 170.35 (21 CFR 170.35), notice is given that Solvay Enzymes, Inc., c/o 1001 G St. NW, suite 500 West, Washington, DC 20001, has filed a petition (GRASP 6G0420) proposing that dextranase enzyme preparation derived from *Chaetomium gracile* be affirmed as GRAS for use in cane and beet sugar processing.

The petition has been placed on display at the Dockets Management Branch (address above).

Any petition that meets the requirements outlined in §§ 170.30 (21 CFR 170.30) and 170.35 is filed by the agency. There is no prefiling review of the adequacy of data to support a GRAS conclusion. Thus, the filing of a petition for GRAS affirmation should not be interpreted as a preliminary indication of suitability for GRAS affirmation.

The potential environmental impact of this action is being reviewed. If the agency finds that an environmental impact statement is not required and this petition results in a regulation, the notice of availability of the agency's finding of no significant impact and the evidence supporting that finding will be published with the regulation in the Federal Register in accordance with 21 CFR 25.40(c).

Interested persons may, on or before April 29, 1996, review the petition and file comments with the Dockets Management Branch (address above). Two copies of any comments should be filed and should be identified with the docket number found in brackets in the heading of this document. Comments should include any available information that would be helpful in determining whether the substance is, or is not, GRAS for the proposed use. In addition, consistent with the regulations promulgated under the National Environmental Policy Act (40 CFR 1501.4(b)), the agency encourages public participation by review of and comment on the environmental assessment submitted with the petition that is the subject of this notice. A copy of the petition (including the environmental assessment) and received comments may be seen in the Dockets Management Branch between 9 a.m. and 4 p.m., Monday through Friday.

Dated: January 29, 1996.

Alan M. Rulis,

Director, Office of Premarket Approval, Center for Food Safety and Applied Nutrition.

[FR Doc. 96–3324 Filed 2–13–96; 8:45 am]

BILLING CODE 4160–01–F

Agency for Toxic Substances and Disease Registry

[ATSDR–104]

Quarterly Public Health Assessments Completed

AGENCY: Agency for Toxic Substances and Disease Registry (ATSDR), Department of Health and Human Services (HHS).

ACTION: Notice.

SUMMARY: This notice is a quarterly announcement which contains the following: A list of sites for which ATSDR has completed public health assessments, or issued an addendum to a previously completed public health assessment, during the period July–September 1995. This list includes sites that are on, or proposed for inclusion on, the National Priorities List (NPL), and non-NPL sites for which ATSDR has prepared a public health assessment, and a site for which an assessment was prepared in response to a request from the public.

FOR FURTHER INFORMATION CONTACT: Robert C. Williams, P.E., DEE, Director, Division of Health Assessment and Consultation, Agency for Toxic Substances and Disease Registry, 1600 Clifton Road, NE., Mailstop E–32, Atlanta, Georgia 30333, telephone (404) 639–0610.

SUPPLEMENTARY INFORMATION: The most recent list of completed public health assessments and public health assessments with addenda was published in the Federal Register on October 30, 1995 [60 FR 55271]. The quarterly announcement is the responsibility of ATSDR under the regulation, Public Health Assessments and Health Effects Studies of Hazardous Substances Releases and Facilities [42 CFR Part 90]. This rule sets forth ATSDR's procedures for the conduct of public health assessments under section 104(i) of the Comprehensive Environmental Response, Compensation, and Liability Act (CERCLA), as amended by the Superfund Amendments and Reauthorization Act (SARA) [42 U.S.C. 9604(i)].

Availability

The completed public health assessments are available for public inspection at the Division of Health Assessment and Consultation, Agency for Toxic Substances and Disease Registry, Building 33, Executive Park Drive, Atlanta, Georgia (not a mailing address), between 8 a.m. and 4:30 p.m., Monday through Friday, except legal holidays. The completed public health assessments are also available by mail through the U.S. Department of Commerce, National Technical Information Service (NTIS), 5285 Port Royal Road, Springfield, Virginia 22161, or by telephone at (703) 487–4650. A charge is applied by NTIS for these public health assessments. The NTIS order numbers are listed in parentheses following the site name.

Public Health Assessments or Addendum Completed or Issued

Between July 1, 1995, and September 30, 1995, public health assessments were issued for the sites listed below:

NPL Sites

Connecticut

Linemaster Switch Corporation—Woodstock—(PB95–270468)

Illinois

Acme Solvent Reclaiming Incorporated—Winnebago—(PB95–261293)

Belvidere Municipal Landfill #1—Belvidere—(PB95–260790)

Ilada Energy Company—East Cape Girardeau—(PB95–260782)
Pagel's Pit—Rockford—(PB95–261202)
Tri-County Landfill Waste Management of Illinois—South Elgin—(PB95–263372)

Massachusetts

Blackburn and Union Privileges—Walpole—(PB96–100870)
Silresim Chemical Corporation—Lowell—(PB95–263182)

Michigan

American Anodco Incorporated—Ionia—(PB95–267571)
Ionia City Landfill—Ionia—(PB95–267647)
Ossineke Groundwater Contamination—Ossineke—(PB95–270641)
Packaging Corporation of America—Filer City—(PB95–271508)

New Jersey

JIS Landfill—South Brunswick—(PB95–263364)
Montclair/West Orange Radium Site—Montclair/West Orange—(PB95–256327)

New York

Onondaga Lake—Syracuse—(PB95–249736)

Ohio

Chem-Dyme Corporation—Hamilton—(PB95–270583)

Oregon

East Multnomah County Groundwater Contamination—Gresham—(PB95–239570)

South Carolina

Palmetto Recycling, Incorporated—Columbia—(PB95–270948)
Rochester Property—Traveler's Rest—(PB95–270823)

Texas

Alcoa (Point Comfort)/Lavaca Bay—Point Comfort—(PB95–263380)
RSR Corporation—Dallas—(PB95–262499)

Washington

Boomsnub/Airco—Vancouver—(PB95–249728)
Commencement Bay, South Tacoma Field (a/k/a Commencement Bay, South Tacoma Channel)—Tacoma—(PB95–270591)

Wisconsin

Sauk County Landfill—Excelsior—(PB95–274486)

Non-NPL Petitioned Site

Arizona

Phelps Dodge Corporation Douglas Reduction Works—Douglas—(PB95–274783)

Dated: February 8, 1996.

Claire V. Broome,

Deputy Administrator, Agency for Toxic Substances and Disease Registry.

[FR Doc. 96–3261 Filed 2–13–96; 8:45 am]

BILLING CODE 4163–70–P

Health Resources and Services Administration

Proposed Collection: Comment Request

In compliance with the requirement of Section 3506(c)(2)(A) of the Paperwork Reduction Act of 1995 for opportunity for public comment on proposed data collection projects, the Health Resources and Services Administration (HRSA) will publish periodic summaries of proposed projects being developed for submission to OMB under the Paperwork Reduction Act of 1995. To request more information on the proposed project or to obtain a copy of the data collection plans and instruments, call the HRSA Reports Clearance Officer on (301) 443–1129.

Comments are invited on: (a) Whether the proposed collection of information is necessary for the proper performance of the functions of the agency, including whether the information shall have practical utility; (b) the accuracy of the agency's estimate of the burden of the proposed collection of information; (c) ways to enhance the quality, utility, and clarity of the information to be collected; and (d) ways to minimize the burden of the collection of information on respondents, including through the use of automated collection techniques or other forms of information technology.

Proposed Projects

1. *Evaluation of the Ryan White HIV/AIDS Dental Reimbursement Program*—Title 776(b) of the Public Health Service Act authorizes the Secretary to make grants to assist accredited dental schools and post-doctoral dental programs to meet uncompensated costs for providing oral health care to HIV infected individuals. A survey will be conducted to determine the effect this reimbursement program has had on the conduct of HIV/AIDS education and services within institutions and their graduates receiving these funds. The survey will assess the effect the Program has had on (1) the support and commitment of institutions to HIV/AIDS education and the provision of care; (2) the scope, content and conduct of HIV/AIDS education in participating institutions, (3) increasing the access to oral health care by HIV/AIDS patients; and (4) improving the integration of oral health care with health care and long-term HIV/AIDS case management under other components of the Ryan White Act. The survey will compare dental schools and hospitals awarded Ryan White HIV/AIDS dental reimbursement monies with eligible institutions which did not participate in the reimbursement program. An initial telephone interview will be followed up by a mail questionnaire. Because this is a targeted survey with limited numbers, automated collection techniques will not be used. Burden estimates are as follows:

Type of respondent	No. of respondents	Responses per respondent	Burden per response	Total burden hours
Dental Schools Receiving Funds	50	2	1.25	125
Hospitals Receiving Funds	70	2	1.25	175
Dental Schools Not Receiving Funds	4	2	1.25	10
Hospitals Not Receiving Funds	26	2	1.25	65
Note: Estimated Total Annual Burden: 375 hours.				

2. *Health Education Assistance Loan (HEAL) Program: Lender's Application for Insurance Claim on a HEAL Loan and Request for Collection Assistance Under the HEAL Program (OMB Nos. 0915–0036 and 0915–0100)*—Revision

and Extension—This clearance request is for extension of approval of two forms that were previously approved by OMB under separate OMB numbers (shown above). HEAL lenders use the Lender's Application for Insurance Claim to request payment from the Federal Government for federally insured loans lost due to borrowers' death, disability, bankruptcy, or default. The Request for Collection Assistance form is used by HEAL lenders to request federal assistance with the collection of delinquent payments from HEAL borrowers. No changes to these forms are proposed. The estimates of burden for the two forms are as follows:

Type of Form	No. of respondents	Responses per respondent	Burden per response	Total burden hours
Lender's Application for Insurance Claim (Form 510)	35	22.97	1.25	1,005
Request for Collection Assistance (Form 513)	35	957.74	.17	5,598
Total burden is estimated to be 6,603 hours.				

Send comments to Patricia Royston, HRSA Reports Clearance Officer, Room 14–36, Parklawn Building, 5600 Fishers Lane, Rockville, MD 20857. Written comments should be received within 60 days of this notice.

Dated: February 7, 1996.

J. Henry Montes,

Associate Administrator for Policy Coordination.

[FR Doc. 96–3212 Filed 2–13–96; 8:45 am]

BILLING CODE 4160–15–P

Indian Health Service

Availability of Funds for Loan Repayment Program for Repayment of Health Professions Educational Loans

AGENCY: Indian Health Service, HHS.

ACTION: Change of award dates.

SUMMARY: The Loan Repayment Program award date, published in 60 FR 50630, September 29, 1995, scheduled to begin November 30, 1995, has been postponed until March 29, 1996.

SUPPLEMENTARY INFORMATION: The Indian Health Service is changing the date on which the first awards under the Loan Repayment Program will be made from November 30, 1995 to March 29, 1996. The beginning award date had to be changed because the updated fiscal year 1996 site listings for the various health professions was not available until January, 1996. Also, during the interrupted work schedules loan applications were not able to be processed.

All other information previously published in 60 FR 50630, regarding the Indian Health Service Availability of Funds for Loan Repayment Program for Repayment of Health Professions Educational Loans, applies.

This program is not subject to review under Executive Order 12372.

The Catalog of Federal Domestic Assistance number is 93.164.

Dated: January 7, 1996.

Michael H. Trujillo,

Assistant Surgeon General Director.

[FR Doc. 96–3208 Filed 2–13–96; 8:45 am]

BILLING CODE 4160–16–M

Public Health Service

Health Professions Preparatory, Pregraduate and Indian Health Professions Scholarship Grant Programs

AGENCY: Indian Health Service, HHS.

ACTION: Update of standing notice of availability of funds for Health Professions Preparatory, Pregraduate and Indian Health Professions Scholarship Grant Programs, published in 60 FR 8663, February 15, 1995.

SUMMARY: For fiscal year (FY) 1996 the Indian Health Service (IHS) announces there will be no funds available to award new scholarships for the following IHS Scholarship Programs:

Health Professions Preparatory and Pregraduate Scholarship Grant Programs, authorized by section 103 of the Indian Health Care Improvement Act (IHCIA), Public Law 94–437, as amended by Public Law 100–713 and by Public Law 102–573.

Health Professions Scholarship (Professions) Program, authorized by section 104 of the IHCIA, Public Law 94–437, as amended by Public Law 100–713 and by Public Law 102–573.

Funding for these three scholarship programs will be limited to continuation awards only based on availability of appropriations. Continuation scholarships under the three programs will be awarded utilizing the Notice of Grant Award, form PHS–5152–1 (Rev. 7/92). For academic year 1996–1997, both full-time and part-time continuation scholarships will be funded for each of the three scholarship programs.

The Health Professions Preparatory Scholarship Grant Program is listed as No. 93.123 in the Office of Management and Budget Catalog of Federal Domestic Assistance (CFDA). The Health Professions Pregraduate Scholarship Grant Program is listed as No. 93.971, and the Indian Health Professions Scholarship Grant Program is listed as No. 93.972 in the CFDA.

DATE: The application deadline for continuation applications is April 1, 1996. Applications shall be considered as meeting the deadline if they are received by the Headquarters Grants Management Branch on the deadline date or postmarked on or before the deadline date. (Applicants should request a legibly dated U.S. Postal Service postmark or obtain a legibly dated receipt from a commercial carrier or U.S. Postal Service. Private metered postmarks shall not be acceptable as proof of timely mailing.)

Applications must be mailed to Ms. M. Kay Carpentier, Acting Director, Division of Acquisition and Grants Management, Indian Health Service, 5600 Fishers Lane, Room 6–25, Rockville, Maryland 20857.

Programmatic inquiries may be addressed to Ms. Patricia Lee-McCoy, Chief, Scholarship Branch, Indian Health Service, Twinbrook Metro Plaza, Suite 100, 12300 Twinbrook Parkway, Rockville, Maryland 20852; Telephone 301–443–6197. (This is not a toll-free number.) For grants information, contact Ms. M. Kay Carpentier, Grants Management Officer, Grants Management Branch, Division of Acquisition and Grants Operations, Indian Health Service, Room 300, 12300 Twinbrook Parkway, Rockville, MD 20852; Telephone 301–443–0243. (This is not a toll-free number.)

Dated: January 7, 1996.

Michael H. Trujillo,

Assistant Surgeon General Director.

[FR Doc. 96–3207 Filed 2–13–96; 8:45 am]

BILLING CODE 4160–16–M

National Institutes of Health

National Institute of Environmental Health Services; Notice of Closed Meeting

Pursuant to Section 10(d) of the Federal Advisory Committee Act, as amended, (5 U.S.C. Appendix 2), notice is hereby given of the following meeting:

Name of Committee: Environmental Health Sciences Review Committee.
Date: March 25–27, 1996.
Time: 8:30 a.m. to Adjournment.
Place: National Institute of Environmental Health Sciences, Building 101, Conference Rooms A, B, and C, South Campus, Research Triangle Park, North Carolina.
Contact Person: Dr. Ethel Jackson, Scientific Review Administrator, P.O. Box 12233, Research Triangle Park, NC 27709, (919) 541–7826.
Purpose: To review and evaluate grant applications.

The meeting will be closed in accordance with the provisions set forth in secs. 552b(c)(4) and 552b(c)(6), Title 5, U.S.C. Applications and the discussions could reveal confidential trade secrets or commercial property such as patentable material, and personal information concerning individuals associated with the applications, the disclosure of which would constitute a clearly unwarranted invasion of personal privacy.

(Catalog of Federal Domestic Assistance Programs Nos. 93.113, Biological Response to Environmental Agents; 93.114, Applied Toxicological Research and Testing; 93.115, Biometry and Risk Estimation; 93.894, Resource and Manpower Development, National Institutes of Health.)

Dated: February 8, 1996.

Susan K. Feldman,

Committee Management Officer, NIH.

[FR Doc. 96–3317 Filed 2–13–96; 8:45 am]

BILLING CODE 4140–01–M

National Heart, Lung, and Blood Institute; Notice of Closed Meetings

Pursuant to Section 10(d) of the Federal Advisory Committee Act, as amended (5 U.S.C. Appendix 2), notice is hereby given of the following Heart, Lung, and Blood Special Emphasis Panel (SEP) meetings:

Name of SEP: Review of Sudden Cardiac Death in Heart Failure Trial.
Date: February 26, 1996,
Time: 1:00 p.m.
Place: Hyatt Regency, Bethesda, Maryland.
Contact Person: David M. Monsees, Ph.D., Rockledge II, Room 7178, 6701 Rockledge Drive, Bethesda, Maryland 20892–7924, (301) 435–0270.
Propose/Agenda: To review and evaluate grant applications.

This notice is being published less than fifteen days prior to this meeting due to the urgent need to meet timing limitations imposed by the grant review cycle.

Name of SEP: Review of Short-Term Research Training for Minority Students (T35s).
Date: March 18, 1996.
Time: 8:00 a.m.
Place: Bethesda Marriott, Bethesda, Maryland
Contact Person: Joyce A. Hunter, Ph.D., Rockledge II, Room 7184, 6701 Rockledge Drive, Bethesda, Maryland 20892–7924, (301) 435–0287.
Propose/Agenda: To review and evaluate grant applications.

These meetings will be closed in accordance with the provisions set forth in secs. 552b(c)(4) and 552b(c)(6), Title 5, U.S.C. Applications and/or proposals and the discussions could reveal confidential trade secrets or commercial property such as patentable material and personal information concerning individuals associated with the applications and/or proposals, the disclosure of which would constitute a clearly unwarranted invasion of personal privacy.

(Catalog of Federal Domestic Assistance Programs Nos. 93.837, Heart and Vascular Diseases Research; 93.838, Lung Diseases Research; and 93.839, Blood Diseases and Resources Research, National Institutes of Health.)

Dated: February 8, 1996.

Susan K. Feldman,

Committee Management Officer, NIH.

[FR Doc. 96–3319 Filed 2–13–96; 8:45 am]

BILLING CODE 4140–01–M

National Institute on Deafness and Other Communication Disorders; Notice of Closed Meeting

Pursuant to Section 10(d) of the Federal Advisory Committee Act, as amended (5 United States Code Appendix 2), notice is hereby given of the following meeting:

Name of Committee: National Institute on Deafness and Other Communication Disorders Special Emphasis Panel.
Date: March 21, 1996.
Time: 8 a.m. to 5 p.m.
Place: Doubletree Hotel, 1750 Rockville Pike, Rockville, MD 20852.
Contact Person: Mary Nekola, Ph.D., Scientific Review Administrator, NIDCD/DEA/SRB, EPS Room 400C, 6120 Executive Boulevard, MSC 7180, Bethesda MD 20892–7180, 301–496–8683.
Purpose/Agenda: To review and evaluate Small Grant applications. The meeting will be closed in accordance with the provisions set forth in sections 552b(c)(4) and 552b(c)(6), Title 5, United States Code. The applications and/or proposals and the discussion could reveal confidential trade secrets or commercial property such as patentable material and personal information concerning individuals associated with the applications and/or proposals, the disclosure of which could constitute a clearly unwarranted invasion of personal privacy.

(Catalog of Federal Domestic Assistance Program No. 93.173 Biological Research Related to Deafness and Communication Disorders.)

Dated: February 8, 1996.

Susan K. Feldman,

Committee Management Officer, NIH.

[FR Doc. 96–3318 Filed 2–13–96; 8:45 am]

BILLING CODE 4140–01–M

DEPARTMENT OF HOUSING AND URBAN DEVELOPMENT

Office of the Assistant Secretary for Housing—Federal Housing Commissioner

[Docket No. FR–3604–N–02]

Housing Counseling Program: Announcement of Funding Awards for FY 1994

AGENCY: Office of the Assistant Secretary for Housing—Federal Housing Commissioner, HUD.

ACTION: Announcement of Housing Counseling Funding Awards.

SUMMARY: In accordance with section 102(a)(4)(C) of the Department of Housing and Urban Development Reform Act of 1989, this announcement notifies the public of funding award decisions made by the Department under its Housing Counseling Program for Fiscal Year 1994. The announcement contains the names and addresses of the award winners and the amount of the awards.

FOR FURTHER INFORMATION CONTACT: Joe McCloskey, Director, Single Family Servicing Division, Department of Housing and Urban Development, Room 9178, 451 Seventh Street, SW., Washington, DC 20410, telephone (202) 708–1672 (this is not a toll-free number). Hearing or speech impaired persons may use the Telecommunications Devices for the Deaf (TDD) by contacting the Federal Information Relay Service at 1–800–877–8339.

SUPPLEMENTARY INFORMATION: HUD's housing counseling program is authorized under section 106 of the Housing and Urban Development Act of 1968 (12 U.S.C. 1701x). The purpose of the program is to promote and protect the interests of housing consumers participating in HUD and other housing programs, as well as to help protect the

interests of HUD and mortgage lenders. Under the housing counseling program, HUD contracts with pre-qualified public or private nonprofit organizations to provide the services authorized by the statute. These organizations are referred to as ''HUD approved housing counseling agencies''. When Congress makes funds available for this purpose, HUD announces the availability of such funds, and invites applications from eligible agencies, through a notice of funding availability (NOFA) published in the Federal Register.

In a Notice of Funding Availability (NOFA) published in the Federal Register on March 21, 1994 (59 FR 13366), HUD announced the availability of $12 million to provide Housing Counseling Grants for FY 1994 in accordance with Section 106. From this amount, the funds were distributed as follows: (1) Approximately $11,375,000 for comprehensive housing counseling grants and technical support for grantees; (2) $125,000 to resolve a housing counseling litigation matter in Boston, Massachusetts; (3) $250,000 to continue the operation of the HUD toll-free housing counseling referral service; and (4) approximately $250,000 to continue the training of housing counselors under the Home Equity Conversion Mortgage Program (HECM). A Notice regarding the award of FY 1995 Housing Counseling grants was published in the Federal Register on October 27, 1995 (60 FR 55037).

In accordance with section 102 (a)(4)(C) of the Department of Housing and Urban Development Reform Act of 1989, the Department is hereby publishing the names and addresses of the HUD-approved agencies awarded funds under the FY 1994 Housing Counseling NOFA, and the amount of funds awarded to each agency. This information is provided in Appendix A to this document.

Dated: February 8, 1996.

Nicolas P. Retsinas,

Assistant Secretary for Housing—Federal Housing Commissioner.

Appendix A

Housing Counseling Grantees for FY 1994

URBAN LEAGUE OF GREATER, NEW HAVEN, ONE STATE STREET, NEW HAVEN, CT 06510, Amount Awarded: $68,140

URBAN LEAGUE OF GREATER HARTFORD, 1229 ALBANY AVENUE, HARTFORD, CT 06112, Amount Awarded: $25,000

CCCS OF CONNECTICUT, 151 NEW PARK AVENUE, HARTFORD, CT 06106, Amount Awarded: $50,000

HOMEOWNER OPTIONS FOR MASS. ELDERLY, 30 WINTER ST. SUITE 1003, BOSTON, MA 02108, Amount Awarded: $30,000

CITY OF BOSTON METRO LIST, HSG OPPORT. CLEARING CENTER, RM 966, ONE CITY HALL PLAZA, BOSTON, MA 02201, Amount Awarded: $125,000

GREATER BOSTON LEGAL SERV, 68 ESSEX STREET, BOSTON, MA 02111, Amount Awarded: $85,000

QUINCY COMM. ACTION PROGRAM, INC., 1509 HANCOCK STREET, QUINCY, MA 02160, Amount Awarded: $4,500

NORTH SHORE ELDERLY SERVICES, INC., 152 SYLVAN STREET, DANVERS, MA 01923, Amount Awarded: $3,000

SOUTH SHORE HOUSING DEVELOPMENT, CORP, 169 SUMMER STREET, KINGSTON, MA 02364, Amount Awarded: $52,416

HAP, INC, 322 MAIN STREET, SPRINGFIELD, MA 01105, Amount Awarded: $30,000

RURAL HOUSING IMPROVEMENT, INC., 218 CENTRAL STREET, WINCHENDON, MA 01475, Amount Awarded: $15,000

CENTRAL MAINE AREA AGENCY

ON AGING, 320 WATER STREET, AUGUSTA, ME 04330, Amount Awarded: $10,000

BLACKSTONE VALLEY COMM. ACTION, INC, 32 GOFF AVENUE, PAWTUCKET, RI 02860, Amount Awarded: $10,000

CHAMPLAIN VALLEY OF ECON. OPPORTUNITY, P.O. BOX 1603, BURLINGTON, VT 05402, Amount Awarded: $10,210

PATTERSON COALITION OF HOUSING, INC, 262 MAIN STREET, PETERSON, NJ 07505, Amount Awarded: $17,474

SHARP COMMITTEE, INC, P.O. BOX 362, PHOENICIA, NY 12464, Amount Awarded: $662

SOUTH BRONX ACTION GROUP, 384 E. 149TH STREET, BRONX, NY 10455, Amount Awarded: $50,000

TROY REHAB. & IMPROVEMENT PROGRAM, INC, 415 RIVER STREET, TROY, NY 12180, Amount Awarded: $6,707

RURAL ULSTER PRESERVATION, CO, 289 FAIR STREET, KINGSTON, NY 12401, Amount Awarded: $4,080

NORTH FORK HOUSING ALLIANCE, INC., 110 SOUTH STREET, GREENPORT, NY 11944, Amount Awarded: $17,500

DELAWARE OPPORTUNITIES, INC., 47 MAIN STREET, DELHI, NY 13753, Amount Awarded: $1,146

RURAL SULLIVAN CITY HSG OPPORT., P.O. BOX 1497, MONTICELLO, NY 12701, Amount Awarded: $25,000

THE SALT & LIGHT CO., INC., 78 WASHINGTON STREET, MT. HOLLY, NJ 08060, Amount Awarded: $6,782

LEWIS COUNTY OPPORTUNITIES, INC., P.O. BOX 111, NEW BREMEN, NY 13367, Amount Awarded: $1,974

MORRIS CITY FAIR HSG COUNCIL, 19 MARKET STREET, MORRISTOWN, NJ 07963, Amount Awarded: $10,000

URBAN LEAGUE OF ONONDAGA COUNTY, INC., 324 UNIVERSITY AVE., SYRACUSE, NY 13210, Amount Awarded: $8,750

UNITED TENANTS OF ALBANY, INC., 33 CLINTON AVENUE, ALBANY, NY 12207, Amount Awarded: $6,125

JERSEY COUNSELING & HSG DEV., 1840 SOUTH BROADWAY, CAMDEN, NJ 08104, Amount Awarded: $42,425

HSG ASSIST. PROG OF ESSEX CTY, P.O. BOX 157, ELIZABETHTOWN, NY 12932, Amount Awarded: $4,664

COURTLAND HOUSING ASSIST. COUNCIL, 4 LINCOLN AVENUE, COURTLAND, NY 13045, Amount Awarded: $4,252

DUTCHESS CTY OFFICE FOR THE AGING, 488 MAIN STREET, POUGHKEEPSIE, NY 12601, Amount Awarded: $2,902

FAIR HOUSING COUNCIL OF NORTHERN NJ, 131 MAIN STREET, HACKENSACK, NJ 07601, Amount Awarded: $20,000

BELLPORT,HAGERMAN,E. PATCHOGUE ALLIANCE, 1492 MONTAUK HWY, BELLPORT, NY 11713, Amount Awarded: $2,500

CATSKILL MOUNTAIN HSG DEV. CORP., P.O. BOX 473, CATSKILL, NY 12414, Amount Awarded: $5,000

MONMOUTH CTY BD OF CHOSEN FREEHOLDERS, P.O. BOX 1255, FREEHOLD, NJ 07728, Amount Awarded: $50,000

MARGERT COMMUNITY CORP., 1931 MOTT AVE. RM404, FAR ROCKAWAY, NY 11691, Amount Awarded: $9,405

MERCER COUNTY HISPANIC ASSOCIATION, 200 WEST STATE ST., TRENTON, NJ 08607, Amount Awarded: $10,844

METRO INTERFAITH SERVICES, INC., 21 NEW STREET, BINGHAMTON, NY 13903, Amount Awarded: $15,641

PATTERSON TSK FRCE FOR COMM. ACTION, 155 ELLISON STREET, PATERSON, NJ 07505, Amount Awarded: $11,576

RENSSELAER CTY COMM. HSG RES. BD, P.O. BOX 255, RENSSELAER, NY 12144, Amount Awarded: $10,430

SC UNITED COMM SERV OF CAMDEN CTY, 146 BLACK HORSE PIKE, MT EPHRAIM, NJ 08059, Amount Awarded: $4,755

FAMILY SER. LEAGUE OF SUFFOLK CTY, 642 NEW YORK AVENUE, HUNTINGTON, NY 11743, Amount Awarded: $10,080

OCEAN, INC., 40 WASHINGTON STREET, TOMS RIVER, NJ 08754, Amount Awarded: $3,133

ALBANY CITY RURAL HSG ALLIANCE, P.O. BOX 407, VOORHEESVILLE, NY 12186, Amount Awarded: $7,000

NORTHEAST HAWLEY DEVELOPMENT ASSOC., 101 GERTRUDE STREET, SYRACUSE, NY 13203, Amount Awarded: $3,773

CHAUTAUQUA OPPORTUNITIES, 188 S. ERIE STREET, MAYVILLE, NY 14757, Amount Awarded: $9,706

HOUSING COALITION OF CENTRAL JERSEY, 9 ELM ROW, NEW BRUNSWICK, NJ 08901, Amount Awarded: $43,750

PUTNAM COUNTY HOUSING CO., 7 SEMINARY HILL ROAD, CARMEL, NY 10512, Amount Awarded: $14,000

ATLANTIC HUMAN RESOURCES, INC., 10 S. TENNESSEE AVE., ATLANTIC CITY, NJ 08401, Amount Awarded: $5,000

COMMUNITY ACTION IN SELF HELP, 9 BROAD STREET, LYONS, NY 14489, Amount Awarded: $3,636

CATH. CHARITIES, DIOCESE OF METUCHEN, 540–550 ROUTE 22 E.,

BRIDGEWATER, NJ 08807, Amount Awarded: $4,723
URBAN LEAGUE OF ESSEX COUNTY, 508 CENTRAL AVENUE, NEWARK, NJ 07107, Amount Awarded: $17,155
MIDDLESEX CTY ECONOMIC OPPORT. CORP, 841 GEORGES ROAD, NORTH BRUNSWICK, NJ 08902, Amount Awarded: $6,340
URBAN LEAGUE OF UNION COUNTY, 272 NORTH BROAD ST, ELIZABETH, NJ 07207, Amount Awarded: $7,822
BETTER NEIGHBORHOODS, INC., 986 ALBANY STREET, SCHENECTADY, NY 12307, Amount Awarded: $12,700
BLACK RIVER HOUSING COUNCIL, INC., 216 WASHINGTON ST, WATERTOWN, NY 13601, Amount Awarded: $2,716
CHECK-MATE, INC., 550 COOKMAN AVENUE, ASBURY PARK, NJ 07712, Amount Awarded: $15,326
ENTERPRISE COMMUNITY DEVELOPMENT CORP, 777 BERGEN AVENUE, JERSEY CITY, NJ 07306, Amount Awarded: $4,009
BROOKLYN NEIGHBORHOOD IMPROVMT ASS., 648 WASHINGTON AVE., BROOKLYN, NJ 11238, Amount Awarded: $10,000
CCCS OF CNY, INC., 120 E. WASHINGTON, ST, SYRACUSE, NY 13202, Amount Awarded: $15,000
ORANGE CTY RURAL DEV. ADVISORY CORP, 365 ROUTE 211 EAST, MIDDLETOWN, NY 10940, Amount Awarded: $4,000
TEST CITY CHILD CARE, INC., 143 W. BROAD STREET, BRIDGETON, NJ 08302, Amount Awarded: $7,000
HSG ASST. CEN OF NIAGARA FRONTIER, 1223 MAIN STREET, BUFFALO, NY 14209, Amount Awarded: $19,735
CORNELL COOP. EXT OF SARATOGA COUNTY, 50 WEST HIGH STREET, BALLSTON SPA, NY 12020, Amount Awarded: $5,633
NEIGHBORHOOD HSG SERVICES OF NYC, 121 W. 27TH STREET, NEW YORK, NY 10001, Amount Awarded: $15,000
URBAN LEAGUE OF METROP. TRENTON, 209 ACADEMY STREET, TRENTON, NJ 08618, Amount Awarded: $5,756
URBAN LEAGUE OF BERGEN CTY, 106 W. PALISADE AVE, ENGLEWOOD, NJ 07631, Amount Awarded: $25,095
COALITION FOR PEOPLE'S RIGHTS, 180 LIBERTY STREET, NEWBURGH, NY 12550, Amount Awarded: $1,399
FAMILY SER. ASSN. OF NASSAU CTY, INC., 336 FULTON AVENUE, HEMPSTEAD, NY 11550, Amount Awarded: $10,000
MICHAEL COLEMAN ASSOCIATES, INC., 1018 WASHINGTON ST., HOBOKEN, NJ 07030, Amount Awarded: $21,096
LONG ISLAND HOUSING SERVICES, INC., 1747 VETERAN MEM HWY, ISLANDIA, NY 11722, Amount Awarded: $29,348
COMMUNITY HOUSING, INC., 613 WASHINGTON ST., WILMINGTON, DE 19801, Amount Awarded: $21,666
NEIGHBORHOOD HOUSE, INC., 1218 B STREET, WILMINGTON, DE 19801, Amount Awarded: $18,848
FIRST STATE COMM. ACTION AGENCY, 308 N. RAILROAD AVE., GEORGETOWN, DE 19947, Amount Awarded: $20,239
HOUSING COUNSELING SERVICES, INC., 2430 ONTARIO ROAD, NW, WASHINGTON, DC 20009, Amount Awarded: $30,888
NEAR NORTHEAST (CIC), 1326 FLORIDA AVE, NE, WASHINGTON, DC 20002, Amount Awarded: $8,708
MARSHALL HEIGHTS, INC., 3917 MINN. AVE., SE, WASHINGTON, DC 20019, Amount Awarded: $12,257
PRINCE WILLIAM SERVICES, 8033 ACTION AVE., MANASSAS, VA 22110, Amount Awarded: $19,177
UNIVERSITY LEGAL SERVICES, 300 I STREET, NE, WASHINGTON, DC 20002, Amount Awarded: $35,280
DC HOUSING FINANCE AGENCY, 1275 K STREET, NW, WASHINGTON, DC 20001, Amount Awarded: $6,058
UNITED COMMUNITIES AGAINST POVERTY, 1400 DOEWOOD LANE, CAPITOL HEIGHTS, MD 20743, Amount Awarded: $24,318
ANN ARUNDEL COUNTY INC., P.O. BOX 1951, ANNAPOLIS, MD 21404, Amount Awarded: $22,452
ST. AMBROSE HOUSING AID CENTER, 321 EAST 25TH STREET, BALTIMORE, MD 21218, Amount Awarded: $34,959
COMMUNITY ORGANIZED TO IMPROVE LIFE, 11 S. CARROLLTON AVE, BALTIMORE, MD 21223, Amount Awarded: $6,883
COMMUNITY ASSISTANCE NETWORK, 7701 DUNMANWAY, BALTIMORE, MD 21222, Amount Awarded: $26,603
MARYLAND RURAL DEVELOPMENT CORP., 322 MARKET STREET, DENTON, MD 21629, Amount Awarded: $5,130
DORCHESTER COMMUNITY DEV. CORP., 435 HIGH STREET, CAMBRIDGE, MA 21613, Amount Awarded: $4,950
HARTFORD COUNTY PUBLIC AGENCY, 15 S. MAIN STREET, BEL AIR, MD 21014, Amount Awarded: $18,667
NEIGHBORHOOD SERVICE CENTER, INC., 126 PORT STREET, EASTON, MD 21601, Amount Awarded: $3,415
SHORE UP, INC., 520 SNOWHILL ROAD, SALISBURY, MD 21801, Amount Awarded: $10,560
CARROLL COUNTY BUREAU OF HOUSING, 225 N. CENTER STREET, WESTMINSTER, MD 21157, Amount Awarded: $4,607
URBAN LEAGUE OF METROPOLITAN HARRISBURG, 25 N. FRONT STREET, HARRISBURGH, PA 17101, Amount Awarded: $3,510
TABOR COMMUNITY SERVICES, INC., 439 EAST KING STREET, LANCASTER, PA 17602, Amount Awarded: $21,104
CCS OF LEHIGH VAL., 3671 CRESCENT COURT EAST, WHITEHALL, PA 18052, Amount Awarded: $10,290
COMM. OF ECON. OPPTY-LUZERNE CTY, 211–213 S. MAIN ST., WILKES-BARRE, PA 18701, Amount Awarded: $6,340
HOUSING ASSO. OF DELAWARE VALLEY, 658 N. WATTS STREET, PHILADELPHIA, PA 19123, Amount Awarded: $4,692
BERKS COMMUNITY ACTION, 227–229 N. FOURTH ST, READING, PA 19601, Amount Awarded: $24,266
HOUSING COUNCIL OF YORK, 116 N. GEORGE STREET, YORK, PA 17401, Amount Awarded: $32,000
NORTHWEST COUNSELING SERVICES, INC., 5001 N. BROAD STREET, PHILADELPHIA, PA 19141, Amount Awarded: $59,880
PHILADELPHIA COUNCIL FOR COMM. ADV., 100 N. 17TH STREET, PHILADELPHIA, PA 19103, Amount Awarded: $23,188
PHILADELPHIA HOUSING DEVELOPMENT CO, 1234 MARKET STREET, PHILADELPHIA, PA 19107, Amount Awarded: $17,514
TENANTS' ACTION GRP OF PHILADELPHIA, 21 S. 12TH STREET, PHILADELPHIA, PA 19107, Amount Awarded: $4,578
ECONOMIC OPPORTUNITY OF SCHUYLKILL, 118 E. NORWEGIAN ST, POTTSVILLE, PA 17901, Amount Awarded: $8,240
TREHAB CENTER OF N.E. PENNSYLVANIA, 7 LAKE AVENUE, MONTROSE, PA 18801, Amount Awarded: $4,556
HARRISBURG FAIR HOUSING COUNCIL, 1228 BAILEY STREET, HARRISBURG, PA 17103, Amount Awarded: $5,215
NEW KENSINGTON C.D.C., 2513–15 FRANKFORD AVE, PHILADELPHIA, PA 19125, Amount Awarded: $4,881
BAYFRONT NATO, INC., 312 CHESTNUT STREET, ERIE, PA 16507, Amount Awarded: $3,166
BOOKER T. WASHINGTON, 1720 HOLLAND STREET, ERIE, PA 16503, Amount Awarded: $4,326
LAWRENCE COUNTY SOCIAL SERVICES, 33–39 S JEFFERSON ST, NEW CASTLE, PA 16103, Amount Awarded: $5,161
MERCER COUNTY COMM. ACTION AGENCY, 309 OHIO STREET, SHARON, PA 16146, Amount Awarded: $6,132
SHENANGO VALLEY URBAN LEAGUE, 601 INDIANA AVENUE, FARRELL, PA 16121, Amount Awarded: $15,704
CCS OF WESTERN PA, 309 SMITHFIELD ST, PITTSBURGH, PA 15222, Amount Awarded: $40,680
ELDER–ADO, INC., 320 BROWNSVILLE RD, PITTSBURGH, PA 15210, Amount Awarded: $10,260
GARFIELD JUBILEE ASSN., 5138 PENN AVENUE, PITTSBURGH, PA 15224, Amount Awarded: $5,001
HOUSING OPPORTUNITIES, INC., 133 7TH STREET, MCKEESPORT, PA 15134, Amount Awarded: $49,600
URBAN LEAGUE HOUSING COUNSELING SERVICES, 1 SMITHFIELD STREET, PITTSBURGH, PA 15222, Amount Awarded: $39,704
WARREN-FOREST COUNTIES ECON. COUNCIL, P.O. BOX 547, WARREN, PA 16365, Amount Awarded: $5,322
GREATER ERIE COMM. ACTION COMMITTEE, 18 WEST 9TH STREET, ERIE, PA 16501, Amount Awarded: $1,222
FAYETTE COUNTY COMM. ACTION AGENCY, 137 N. BEESON AVENUE, UNIONTOWN, PA 15401, Amount Awarded: $7,397
CENTER FOR INDEPENDENT LIVING, 7110 PENN. AVENUE, PITTSBURGH, PA 15208, Amount Awarded: $9,135
TABLELAND SERVICES, INC., 131 N. CENTER AVENUE, SOMERSET, PA 15501, Amount Awarded: $3,845

COMMUNITY RESOURCES FOR INDEPENDENCE, INC, 2222 FILMORE AVENUE, ERIE, PA 16506, Amount Awarded: $2,476
COMMUNITY ACTION SOUTHWEST, 315 EAST HALLAM AVE., WASHINGTON, PA 15301, Amount Awarded: $6,587
NORTHERN TIER COMM. ACTION CORP, 135 WEST 4TH STREET, EMPORIUM, PA 15834, Amount Awarded: $3,829
ASSOCIATED FAMILY SERVICES, 213 CENTER STREET, MEADVILLE, PA 16335, Amount Awarded: $4,370
ARMSTRONG COUNTY ACTION AGENCY, ARMSDALE BLDG ROAD 8, KITTANNING, PA 16201, Amount Awarded: $3,474
INDIANA COUNTY ACTION PROGRAM, 827 WATER STREET, INDIANA, PA 15701, Amount Awarded: $4,528
MONTICELLO AREA ACTION AGENCY, 215 E. HIGH STREET, CHARLOTTESVILLE, VA 22901, Amount Awarded: $5,346
NEWPORT NEWS/OFFICE OF HUMAN AFFAIRS, P.O. BOX 37, NEWPORT NEWS, VA 23607, Amount Awarded: $14,112
SOUTHEASTERN TIDEWATER OPPORTUNITY, 2551 ALMEDA AVENUE, NORFOLK, VA 23510, Amount Awarded: $20,070
CITY OF ROANOKE HOUSING AUTHORITY, 2624 SALEM TURNPIKE, NW, SALEM, VA 24017, Amount Awarded: $6,172
HOUSING OPPORTUNITIES MADE EQUAL, 1218 W. CARY STREET, RICHMOND, VA 23220, Amount Awarded: $37,350
RICHMOND URBAN LEAGUE, 101 E. CLAY STREET, RICHMOND, VA 23219, Amount Awarded: $24,912
TOTAL ACTION AGAINST POVERTY, P.O. BOX 2868, ROANOKE, VA 24001, Amount Awarded: $5,166
PEOPLE INC., 988 W. MAIN STREET, ABINGDON, VA 24210, Amount Awarded: $2,156
CCC OF KANAWHA VALLEY, INC, 8 CAPITOL STREET, CHARLESTON, WV 25301, Amount Awarded: $24,290
FAMILY SERVICES—UPPER OHIO VALLEY, 51 11TH STREET, WHEELING, WV 26003, Amount Awarded: $9,789
CRISS-CROSS, INC, 115 S. 4TH STREET, CLARKSBURG, WV 26301, Amount Awarded: $11,118
CONSUMER CREDIT OF MID OHIO VALLEY, 2715 MURDOCH AVENUE, PARKERSBURG, WV 25301, Amount Awarded: $17,500
CONSUMER CREDIT OF BLUEFIELD, INC., P.O. BOX 6282, BLUEFIELD, WV 24701, Amount Awarded: $6,390
CCCS OF FAMILY SERVICE, 1304 FIFTH AVENUE, HUNTINGTON, WV 25701, Amount Awarded: $19,836
CITY OF ALBANY DEPT OF COM & ECON DEV, 230 S. JACKSON ST., ALBANY, GA 31701, Amount Awarded: $6,000
UNIFIED GOVT ATHENS-CLARKE CTY HED, 155 E. WASHINGTON ST, ATHENS, GA 30603, Amount Awarded: $45,000
MIDDLE GA COMMUNITY ACTION AGENCY, INC., 1570 WATSON BLVD., WARNER ROBINS, GA 31088, Amount Awarded: $3,900
GREATER MACON HOUSING CORPORATION, 682 CHERRY STREET, MACON, GA 31201, Amount Awarded: $10,000
AREA COMM. TO IMPROVE OPPORT. NOW, INC., 594 OCONEE STREET, ATHENS, GA 30603, Amount Awarded: $911
METRO FAIR HOUSING SERVICES, INC., 1083 AUSTIN AVENUE, NE, ATLANTA, GA 31107, Amount Awarded: $20,000
GEORGIA LEGAL SERVICES, 10 WHITAKER STREET, SAVANNAH, GA 31412, Amount Awarded: $25,000
DEKALB HOUSING COUNSELING CENTER, INC., 4151 MEMORIAL DRIVE, DECATUR, GA 30032, Amount Awarded: $150,000
CCCS, 1350 15TH AVENUE, COLUMBUS, GA 31902, Amount Awarded: $21,600
CCCS OF GREATER ATLANTA, 100 EDGEWOOD AVENUE, ATLANTA, GA 30303, Amount Awarded: $25,000
ECO. OPORT FOR SAVANNAH-CHATHAM CTY, 618 W. ANDERSON ST., SAVANNAH, GA 31401, Amount Awarded: $60,000
COMM ACT. AGCY OF CALHOUN, CLEBURNE & CHEROKEE, 1702 NOBLE STREET, ANNISTON, AL 36202, Amount Awarded: $75,000
CITY OF TUSCALOOSA HSG COUNSELING PROGRAM, P.O. BOX 2089, TUSCALOOSA, AL 35403, Amount Awarded: $30,000
HSG AUTH OF CITY OF MONTG., 1020 BELL STREET, MONTGOMERY, AL 36104, Amount Awarded: $25,000
COMM. ACT. AGCY OF N. CEN. ALABAMA, 107 SECOND AVENUE, DECATUR, AL 35602, Amount Awarded: $39,970
MOBILE HOUSING BOARD, 151 S. CLAIBORNE ST, MOBILE, AL 36633, Amount Awarded: $60,000
ALABAMA COUNCIL ON HUMAN RELATIONS, P.O. BOX 409, AUBURN, AL 36831, Amount Awarded: $6,478
COMM. SERVICE PROGRAMS OF W. ALABAMA, INC., 601 17TH STREET, TUSCALOOSA, AL 35401, Amount Awarded: $6,000
COMM. ACTION AGENCY OF NW ALABAMA, INC., 502 EAST COLLEGE ST, FLORENCE, AL 35630, Amount Awarded: $3,000
JEFFERSON COUNTY HOUSING AUTHORITY, 2100 WALKER CHAPEL RD, FULTONDALE, AL 35068, Amount Awarded: $15,000
HUMAN RESOURCE DEVELOPMENT CO., 101 GEORGE WALLACE DR., ENTERPRISE, AL 36331, Amount Awarded: $15,630
HOUSING AUTH OF BIRMINGHAM DISTRICT, 1826 3RD AVENUE S., BIRMINGHAM, AL 35233, Amount Awarded: $50,000
COMM ACT AGCY OF HUNTSVILLE/ MADISON & LIMESTONE COUNTIES, P.O. BOX 3975, HUNTSVILLE, AL 35810, Amount Awarded: $35,000
HGS AUTH OF CITY OF AUBURN, ALABAMA, 931 BOOKER STREET, AUBURN, AL 36830, Amount Awarded: $12,600
BIRMINGHAM URBAN LEAGUE, INC., 1717 4TH AVENUE N., BIRMINGHAM, AL 35202, Amount Awarded: $48,000
CEIBA HOUSING & ECON. DEVELOPMENT, P.O. BOX 203, CEIBA, PR 00735, Amount Awarded: $36,000
CCCS OF PUERTO RICO, INC., 1606 PONCE DE LEON AVE, SANTURCE, PR 00908, Amount Awarded: $25,000
INSTITUTO PONCENO DEL HOGAR, P.O. BOX 5009, PONCE, PR 00733, Amount Awarded: $25,000
SPECTRUM INSTITUTE, 3200 COLONIAL DRIVE, COLUMBIA, SC 29224, Amount Awarded: $50,000
FAMILY SERVICE CENTER, 2700 MIDDLESBURG DR., COLUMBIA, SC 29204, Amount Awarded: $20,000
TRIDENT UNITED WAY, 32 ANN STREET, CHARLESTON, SC 29413, Amount Awarded: $33,255
CAROLINA REGIONAL LEGAL SERV. CORP., 279 WEST EVANS ST, FLORENCE, SC 29503, Amount Awarded: $35,000
PIEDMONT LEGAL SERVICES, INC., 148 EAST MAIN STREET, SPARTANBURG, SC 29306, Amount Awarded: $19,000
SUNBELT HUMAN ADVANCEMENT RESOURCES, P.O. BOX 10204, GREENVILLE, SC 29603, Amount Awarded: $10,000
PEE DEE COMMUNITY ACTION AGENCY, 2685 SOUTH IRBY ST., FLORENCE, SC 29505, Amount Awarded: $30,000
PALMETTO LEGAL SERVICES, 2109 BULL STREET, COLUMBIA, SC 29202, Amount Awarded: $35,000
GREENVILLE URBAN LEAGUE, 15 REGENCY HILL DR., GREENVILLE, SC 29607, Amount Awarded: $100,000
CCCS OF S. FLORIDA, 11645 BISCAYNE BLVD., NORTH MIAMI, FL 33181, Amount Awarded: $75,000
CCCS OF PALM BEACH, 2330 CONGRESS AVE. S., W. PALM BEACH, FL 33406, Amount Awarded: $76,739
CCCS OF SW FLORIDA, INC, 2500 AIRPORT ROAD, S., NAPLES, FL 33962, Amount Awarded: $6,300
BROWARD COUNTY HOUSING AUTHORITY, 1773 N. STATE ROAD 7, LAUDERHILL, FL 33313, Amount Awarded: $26,800
URBAN LEAGUE OF PALM BEACH CTY, INC, 1700 N. AUSTRALIAN AVE, WEST PALM BEACH, FL 33407, Amount Awarded: $35,350
N.C. CLIENT COUNCILS, INC, 806 SOUTH THIRD ST., SMITHFIELD, NC 27577, Amount Awarded: $10,291
FAMILY HOUSING SERVICES, INC., 910 N. ALEXANDER ST., CHARLOTTE, NC 28206, Amount Awarded: $48,307
WESTERN PIEDMONT COUNCIL OF GOVT'S., 317 1ST AVENUE, NW, HICKORY, NC 28601, Amount Awarded: $16,200
JOINT ORANGE-CHATHAM COMM. ACT. INC, 105 W. CHATHAM ST., PITTSBORO, NC 27312, Amount Awarded: $39,500
DURHAM AFFORDABLE HSG COALITION, 331 W. MAIN STREET, DURHAM, NC 27701, Amount Awarded: $37,000
CCC OF WESTERN N.C., 50 S. FRENCH BROAD AVE, ASHEVILLE, NC 28801, Amount Awarded: $15,000
RESOURCES FOR SENIORS, 1001 NAVAHO DRIVE, RALEIGH, NC 27609, Amount Awarded: $4,047

SANDHILLS COMM. ACTION PROGRM, INC., 103 SAUNDERS STREET, CARTHAGE, NC 28327, Amount Awarded: $20,450
THE ALBEMARLE COMMISSION, P.O. BOX 646, HERTFORD, NC 27944, Amount Awarded: $9,000
JOHNSTON-LEE COMMUNITY ACTION INC., P.O. BOX DRAWER 711, SMITHFIELD, NC 27577, Amount Awarded: $40,000
CUMBERLAND COMMUNITY ACTION PROGRAM, INC, P.O. BOX 2009, FAYETTEVILLE, NC 28302, Amount Awarded: $60,000
CCCS OF FORSYTH COUNTY, 926 BROOKSTONE AVE., WINSTON-SALEM, NC 27101, Amount Awarded: $15,834
GUILFORD COUNTY COMM. ACTION PROGRAM, INC, 201 S. ELM STREET, GREENSBORO, NC 27420, Amount Awarded: $7,500
HOUSING EDUCATION AND ECON. DEV., P.O. BOX 11853, JACKSON, MS 39283, Amount Awarded: $45,000
NORTH MISSISSIPPI RURAL LEGAL SERV., 2134 W. JACKSON AVE., OXFORD, MS 38655, Amount Awarded: $25,000
GULF COAST COMMUNITY ACTION AGENCY, 500 24TH STREET, GULFPORT, MS 39502, Amount Awarded: $12,250
MISSISSIPPI DEPT OF HUMAN SERVICES, 750 NORTH STATE ST., JACKSON, MS 39202, Amount Awarded: $5,000
BIG RIVER HOUSING DEV. CORP., 201 HUMPHEREY ST., MARKS, MS 38646, Amount Awarded: $3,000
JACKSONVILLE URBAN LEAGUE, 233 WEST DUVALL ST., JACKSONVILLE, FL 32202, Amount Awarded: $24,000
TALLAHASSEE URBAN LEAGUE, INC., 923 OLD BAINBRIDGE RD, TALLAHASSEE, FL 32303, Amount Awarded: $20,000
KNOXVILLE AREA URBAN LEAGUE, 2516 MAGNOLIA AVE., KNOXVILLE, TN 37901, Amount Awarded: $50,000
UPPER E. TENNESSEE HUMAN DEV. AGENCY, 301 LOUIS STREET, KINGSPORT, TN 37662, Amount Awarded: $5,000
CHATTANOOGA HUMAN SERV. DEPT., 501 W. 12TH STREET, CHATTANOOGA, TN 37402, Amount Awarded: $8,000
CHATTANOOGA AREA URBAN LEAGUE, 730 M.L. KING BLVD., CHATTANOOGA, TN 37403, Amount Awarded: $10,000
CCCS OF GREATER KNOXVILLE, INC, 1012 HEISKELL AVE., KNOXVILLE, TN 37927, Amount Awarded: $18,500
DOUGLAS-CHEROKEE ECONOMIC AUTHORITY, 534 E. 1ST NORTH ST, MORRISTOWN, TN 37816, Amount Awarded: $2,796
FAM./CHILDREN'S SERV OF CHATTANOOGA, INC, 300 E. 8TH STREET, CHATTANOOGA, TN 37403, Amount Awarded: $12,000
EAST TENNESSEE HUMAN RESOURCE AGENCY, 408 N. CEDAR BLUFF RD, KNOXVILLE, TN 37923, Amount Awarded: $15,000
HOUSING PARTNERSHIP, INC., 801 VINE STREET, LOUISVILLE, KY 40204, Amount Awarded: $15,000
LOUISVILLE URBAN LEAGUE, INC., 1535 WEST BROADWAY, LOUISVILLE, KY 40203, Amount Awarded: $30,000
BRIGHTON CENTER, INC., 7TH & PARK STREET, NEWPORT, KY 41072, Amount Awarded: $16,013
TENANT SERVICES & HOUSING COUNSEL, INC, 200 EAST MAIN STREET, LEXINGTON, KY 40507, Amount Awarded: $20,000
LOUISVILLE CHAPTER AMER. RED CROSS (ACCEPT), 510 E. CHESTNUT ST., LOUISVILLE, KY 40201, Amount Awarded: $27,607
NORTHERN KENTUCKY COMM. CENTER, 824 GREENUP STREET, COVINGTON, KY 41011, Amount Awarded: $60,000
WEST TENNESSEE LEGAL SERVICES, 210 WEST MAIN STREET, JACKSON, TN 38302, Amount Awarded: $60,000
MEMPHIS NATIONAL BUSINESS LEAGUE, 3161 PARK AVENUE, MEMPHIS, TN 38111, Amount Awarded: $36,000
HOUSING OPPORTUNITIES CORP. II, 147 JEFFERSON AVE., MEMPHIS, TN 38103, Amount Awarded: $8,000
MEMPHIS URBAN LEAGUE, 2279 LAMAR AVENUE, MEMPHIS, TN 38114, Amount Awarded: $8,750
METRO. DEV. & HOUSING AGENCY, 701 S. SIXTH STREET, NASHVILLE, TN 37206, Amount Awarded: $20,000
NASHVILLE URBAN LEAGUE, INC., 1219 9TH AVENUE N., NASHVILLE, TN 37208, Amount Awarded: $75,000
TARGET COMMUNITY ASSOCIATION, 606 E. WASHINGTON ST, PULASKI, TN 38478, Amount Awarded: $15,680
HOPE INC., 1501 HERMAN STREET, NASHVILLE, TN 37208, Amount Awarded: $30,000
CITIZENS FOR AFFORDABLE HOUSING INC, 1719 WEST END AVE., NASHVILLE, TN 37203, Amount Awarded: $50,000
MID CUMBERLAND COMM. ACTION AGENCY, P.O. BOX 1048, SMYRNA, TN 37167, Amount Awarded: $15,000
METRO SOCIAL SERVICES, 25 MIDDLETON STREET, NASHVILLE, TN 37210, Amount Awarded: $100,000
METRO ORLANDO URBAN LEAGUE, 2512 W. COLONIAL DR, ORLANDO, FL 32804, Amount Awarded: $20,000
CCCS FL GULF COAST, 5201 W. KENNEDY BLVD, TAMPA, FL 33609, Amount Awarded: $60,000
AGRICULTURAL AND LABOR PROGRAM, INC, 7301 LYNCHBURG ROAD, WINTER HAVEN, FL 33881, Amount Awarded: $20,000
CITY OF TAMPA COMM. REDEVLP. AGENCY, 1310 E. 9TH AVENUE, TAMPA, FL 33605, Amount Awarded: $50,000
MANATEE OPPORTUNITY COUNCIL, INC., 236 9TH AVENUE WEST, BRADENTON, FL 34205, Amount Awarded: $20,000
HOUSING AUTH OF THE CTY OF LAKE, 33928 N. ROUTE 45, GRAYSLAKE, IL 60030, Amount Awarded: $20,000
WILL CTY CEN. FOR COMM. CONCERNS, 1 DORIS AVENUE, JOLIET, IL 60433, Amount Awarded: $2,200
COMM. SER COUNCL FOR N. WILL COUNTY, 719 PARKWOOD AVE., ROMEOVILLE, IL 60441, Amount Awarded: $90,000
CITY OF SPRINGFIELD DEPT OF HUMAN RELATIONS, 227 S. SEVENTH ST., SPRINGFIELD, IL 62701, Amount Awarded: $6,200
CHICAGO ROSELAND COAL. FOR COMM CONTROL, 11015 S. MICHIGAN AVE, CHICAGO, IL 60628, Amount Awarded: $25,000
DuPAGE HOMEOWNERSHIP CENTER, INC., 1333 N. MAIN STREET, WHEATON, IL 60187, Amount Awarded: $8,725
CHICAGO URBAN LEAGUE, 4510 S. MICHIGAN, CHICAGO, IL 60653, Amount Awarded: $35,220
CCCS OF E. CENTRAL ILLINOIS, 363 S. MAIN, DECATUR, IL 62523, Amount Awarded: $12,000
COMM. & ECON DEV. ASS. OF COOK CTY, 224 N. DES PLAINES ST, CHICAGO, IL 60661, Amount Awarded: $100,000
LAKE COUNTY COMM. ACTION PROJECT, 106 S. SHERIDAN RD, WAUKEGAN, IL 60085, Amount Awarded: $18,000
DISTRESSED HOMEOWNERS, INC., 11622 S. WESTERN AVE, CHICAGO, IL 60643, Amount Awarded: $20,010
SPANISH COALITION FOR HOUSING, 3439 W. NORTH AVENUE, CHICAGO, IL 60647, Amount Awarded: $100,000
CEFS ECONOMIC OPPORTUNITY CORP., 101 N. 4TH STREET, EFFINGHAM, IL 62401, Amount Awarded: $18,198
MADISON COUNTY URBAN LEAGUE, INC., 210 WILLIAM STREET, ALTON, IL 62002, Amount Awarded: $20,010
MONTGOMERY COUNTY COMM. ACTION, 318 S. MAIN STREET, DAYTON, OH 45401, Amount Awarded: $18,858
PROTECTIVE RESOURCES ORG, FOR SENIOR, INC., 105 E. FOURTH STREET, CINCINNATI, OH 45202, Amount Awarded: $6,062
BETTER HSG LEAGUE OF GREATER CIN., INC., 2400 READING ROAD, CINCINNATI, OH 45202, Amount Awarded: $60,000
CATHOLIC CHAR. DIOCESE OF YOUNGSTOWN, 225 ELM STREET, YOUNGSTOWN, OH 44503, Amount Awarded: $40,200
URBAN LEAGUE OF GREATER CLEVELAND, 1255 EUCLID AVENUE, CLEVELAND, OH 44115, Amount Awarded: $44,700
FAMILY SERVICES ASSOCIATION, 1704 N. ROAD, S.E., WARREN, OH 44484, Amount Awarded: $36,842
CHILDREN'S & FAMILY SER. AGENCY, 535 MARIMMION AVE., YOUNGSTOWN, OH 44502, Amount Awarded: $10,000
LUTHERAN HOUSING CORPORATION, 13944 EUCLID AVE, EAST CLEVELAND, OH 44112, Amount Awarded: $140,656
NEAR WEST SIDE MULTI-SERVICES CORP., 4115 BRIDGE AVENUE, CLEVELAND, OH 44113, Amount Awarded: $13,608
HOUSING DIRECTORS OF GREATER TOLEDO, 1326 COLLINGWOOD, TOLEDO, OH 43620, Amount Awarded: $10,000
FAIR HOUSING CONTACT SERVICE, 333 S. MAIN STREET, AKRON, OH 44308, Amount Awarded: $12,500
CCCS OF CENTRAL OHIO, INC., 697 E. BROAD STREET, COLUMBUS, OH 43215, Amount Awarded: $60,000
CONSOC HOUSING COUNSELING INC., 1889 E. LIVINGSTON, COLUMBUS, OH 43209, Amount Awarded: $80,000
PORTSMOUTH INNER-CITY DEV. CO., 1206 WALLER STREET, PORTSMOUTH, OH 45662, Amount Awarded: $10,000

MARION-CRAWFORD COMM. ACTION COMMISSION, 240 E. CHURCH STREET, MARION, OH 43301, Amount Awarded: $2,500
REGIONAL HOUSING CENTER, 595 E. BROAD STREET, COLUMBUS, OH 43205, Amount Awarded: $45,562
DETROIT NON-PROFIT HSG CO., 1200 SIXTH STREET, DETROIT, MI 48226, Amount Awarded: $58,005
CREDIT COUNSELING CENTERS, INC., 38505 COUNTY CLUB DR, FARMINGTON HILLS, MI, Amount Awarded: $60,627
R3 CORP, 12255 CAMDEN, DETROIT, MI 48203, Amount Awarded: $25,500
HUMAN DEVELOPMENT COMMISSION, 429 MONTAGUE AVE., CARO, MI 48723, Amount Awarded: $14,000
URBAN LEAGUE OF FLINT, 5005 CLOVERLAWN DR, FLINT, MI 48504, Amount Awarded: $25,025
MICHIGAN HOUSING COUNSELORS, INC., 237 S.B. GRATIOT AVE, MT. CLEMENS, MI 48043, Amount Awarded: $34,636
BURTON NEIGHBORHOOD HOUSING SERVICES, 1335 KENNETH STREET, BURTON, MI 48529, Amount Awarded: $24,532
VAN BUREN CTY & CASS CTY COMM., 488 S. PAW PAW ST., LAWRENCE, MI 49064, Amount Awarded: $2,500
HOUSING RESOURCE CENTER, 300 N. WASHINGTON SQ, LANSING, MI 48933, Amount Awarded: $25,000
NORTHWEST MICHIGAN HUMAN SERV. AGCY, 3963 THREE MILE ROAD, TRAVERSE CITY, MI 49684, Amount Awarded: $4,866
URBAN LEAGUE OF NW INDIANA, INC., 3101 BROADWAY, GARY, IN 46409, Amount Awarded: $36,807
HOUSING AUTHORITY OF SOUTH BEND, 501 SOUTH SCOTT ST., SOUTH BEND, IN 46634, Amount Awarded: $8,542
HOOSIER UPLAND ECONOMIC DEV. CORP., 521 W. MAIN STREET, MITCHELL, IN 47446, Amount Awarded: $27,500
HSG AUTH OF THE CITY OF FT WAYNE, INDIANA, 2013 S. ANTHONY BLVD, FORT WAYNE, IN 46869, Amount Awarded: $16,512
COMM. ACTION OF GREATER INDIANAPOLIS, INC., 2445 N. MERIDIAN ST., INDIANAPOLIS, IN 46208, Amount Awarded: $139,900
CCCS OF THE TRI-STATE, 715 1ST AVENUE, EVANSVILLE, IN 47724, Amount Awarded: $25,000
HOPE OF EVANSVILLE, INC., 100 WASHINGTON AVE., EVANSVILLE, IN 47713, Amount Awarded: $12,500
LAKE COUNTY, 2293 NORTH MAIN ST., CROWN POINT, IN 46307, Amount Awarded: $26,467
REAL SERVICE INC., 1151 S. MICHIGAN, SOUTH BEND, IN 46634, Amount Awarded: $5,000
HAMMOND HOUSING AUTHORITY, 7329 COLUMBIA CIR. W, HAMMOND, IN 46324, Amount Awarded: $13,749
CITY OF BLOOMINGTON, P.O. BOX 100, BLOOMINGTON, IN 47402, Amount Awarded: $3,000
HOUSING ASSISTANCE OFFICE, INC., 1138 LINCOLNWAY EAST, SOUTH BEND, IN 46634, Amount Awarded: $23,566
ANDERSON HOUSING AUTH., 528 W. 11TH STREET, ANDERSON, IN 46016, Amount Awarded: $29,137
RACINE/KENOSHA COMM. ACTION AGENCY, 72 7TH STREET, RACINE, WI 53403, Amount Awarded: $10,000
MILWAUKEE UNITED FOR BETTER HGS, INC, 4011 W. CAPITOL DR., MILWAUKEE, WI 53216, Amount Awarded: $30,000
COALITION OF WISCONSIN AGING GROUPS, 1245 E. WASH. AVE, MADISON, WI 53703, Amount Awarded: $7,348
WALKER'S POINT DEVELOPMENT CORP., 914 S. 5TH STREET, MILWAUKEE, WI 53204, Amount Awarded: $27,600
COMMUNITY ADVOCATES, 4906 W. FOND DU LAC, MILWAUKEE, WI 53216, Amount Awarded: $30,000
COMM. ACTION INC OF ROCK & WALWORTH COUNTIES, 2300 KELLOGG AVENUE, JANESVILLE, WI 53546, Amount Awarded: $5,033
WESTSIDE CONSERVATION CORPORATION, 3306 W. HIGHLAND BLVD, MILWAUKEE, WI 53208, Amount Awarded: $35,000
TENANT RESOUCE CENT. INC., 122 STATE STREET, MADISON, WI 53703, Amount Awarded: $7,644
SENIOR HOUSING INC., 1885 UNIVERSITY AVE. W., ST. PAUL, MN 55104, Amount Awarded: $15,730
ST. PAUL HOUSING, INFORMATION OFFICE, 21 WEST FOURTH ST., ST. PAUL, MN 55102, Amount Awarded: $17,500
CONSUMER CREDIT COUNSELING SERVICE, 1111 3RD AVENUE, MINNEAPOLIS, MN 55404, Amount Awarded: $21,361
SOUTHERN MINNESOTA REGIONAL, 700 MINNESOTA BLDG., ST. PAUL, MN 55101, Amount Awarded: $30,630
TACTICS, INC., 1315 PENN AVENUE N., MINNEAPOLIS, MN 55411, Amount Awarded: $20,000
CCCS-GREATER FT. WORTH, 807 TEXAS STREET, FORT WORTH, TX 76102, Amount Awarded: $25,000
CCCS-GREATER DALLAS, 8737 KING GEORGE RD, DALLAS, TX 75235, Amount Awarded: $169,500
HOUSING OPP. OF FT. WORTH, 1305 W. MAGNOLIA ST., FORT WORTH, TX 76104, Amount Awarded: $15,271
CCCS-N. CENTRAL TEXAS, 1600 RED BUD BLVD., MCKINNEY, TX 75069, Amount Awarded: $10,308
DALLAS CTY COMM. ACT., 2121 MAIN STREET, DALLAS, TX 75201, Amount Awarded: $6,000
ORG. OF CHRISTIANS ASSIST PEOPLE, P.O. BOX 1241, PORT ARTHUR, TX 77641, Amount Awarded: $480
GULF COAST COMM. SERV. ASSN., 6300 BOWLING GREEN, HOUSTON, TX 77021, Amount Awarded: $30,000
CCCS-GULF COAST AREA, 4600 GULF FREEWAY, HOUSTON, TX 77023, Amount Awarded: $199,000
HOUSING OPP. OF HOUSTON, 2900 WOODRIDGE, HOUSTON, TX 77087, Amount Awarded: $17,924
COMMUNITY CARE HOUSING, 10303 NORTHWEST FWY., HOUSTON, TX 77092, Amount Awarded: $15,900
HOUSTON AREA URBAN LEAGUE, 3215 FANIN, HOUSTON, TX 77004, Amount Awarded: $10,000
AUSTIN TENANTS COUNCIL, 1619 E. CESAR CHAVEZ ST, AUSTIN, TX 78702, Amount Awarded: $27,432
COLONIAS DEL VALLE, P.O. BOX 764, PHARR, TX 78577, Amount Awarded: $4,032
COMMUNITY DEVELOPMENT CORP., 1150 E. ADAMS STREET, BROWNSVILLE, TX 78520, Amount Awarded: $5,131
CHILD & FAMILY SERVICES, 1221 W. BEN WHTE BLVD, AUSTIN, TX 78704, Amount Awarded: $19,806
CCCS-GREATER SAN ANTONIO, 6851 CITIZENS PKWY, SAN ANTONIO, TX 78229, Amount Awarded: $13,482
CCCS OF GREATER NEW ORLEANS, 1539 JACKSON AVENUE, NEW ORLEANS, LA 70130, Amount Awarded: $2,755
S.M.I.L.E. COMM. ACTION AGENCY, 501 ST. JOHN STREET, LAFAYETTE, LA 70502, Amount Awarded: $11,539
CCCS OF LOUISIANA, 615 CHEVELLE COURT, BATON ROUGE, LA 70806, Amount Awarded: $60,000
PARISH OF JEFFERSON, 1221 ELMWOOD PK BLVD, HARAHAN, LA 70123, Amount Awarded: $20,000
ST. MARY COMM. ACTION COMM., INC., 1407 BARROW ST., FRANKLIN, LA 70538, Amount Awarded: $770
ST. LANDRY COMM. ACTION AGENCY, P.O. DRAWER 1510, OPELOUSAS, LA 70570, Amount Awarded: $6,376
DESIRE COMM. HOUSING CORPORATION, 3251 ST FERDINAND ST, NEW ORLEANS, LA 70126, Amount Awarded: $45,570
CENTRAL CITY HOUSING DEV. CORP., 2020 JACKSON AVE., NEW ORLEANS, LA 70113, Amount Awarded: $5,626
FAMILY SERVICE AGENCY, 628 W. BROADWAY, N. LITTLE ROCK, AR 72119, Amount Awarded: $6,122
FAMILY SUPPORT SERVICES, 1103 SE 15TH, BENTONVILLE, AR 72712, Amount Awarded: $713
UNIVERSAL HOUSING DEVELOPMENT, 301 EAST THIRD, RUSSELLVILLE, AR 72811, Amount Awarded: $2,247
URBAN LEAGUE OF ARKANSAS, P.O. BOX 164039, LITTLE ROCK, AR 72211, Amount Awarded: $3,380
WHITE RIVER REGIONAL HOUSING AUTH., P.O. BOX 650, MELBOURNE, AR 72556, Amount Awarded: $4,585
COMMUNITY HOUSING RESOURCE BOARD, 5302 AVENUE Q.S. DR, LUBBOCK, TX 79412, Amount Awarded: $19,976
GUADALUPE ECONOMIC SERVICES CORP., 1416 FIRST STREET, LUBBOCK, TX 79401, Amount Awarded: $58,328
GREATER EL PASO SERVICES, INC., 4838 MONTANA AVE., EL PASO, TX 79903, Amount Awarded: $17,837
CCCS OF CENTRAL OKLAHOMA, 3230 N. ROCHWELL, BETHANY, OK 73008, Amount Awarded: $13,623
HSG AUTH. OF THE CHICKASAW NATION, P.O. BOX 668, ADA, OK 74820, Amount Awarded: $25,155
NEIGHBORHOOD HOUSING SERVICE, 3034 LAKESHORE DRIVE, SHREVEPORT, LA 71133, Amount Awarded: $1,651

CENLA COMMUNITY ACTION COMMITTEE, 230 BOLTON AVENUE, ALEXANDRIA, LA 71301, Amount Awarded: $2,531
OUACHITA MULTI-PURPOSE COMM. ACTION AGENCY, P.O. BOX 3086, MONROE, LA 71210, Amount Awarded: $3,396
HSG AUTH. OF THE CITY OF MARSHALL, P.O. BOX 609. MARSHALL, TX 75671, Amount Awarded: $14,343
CADDO COMM. ACTION AGENCY, INC., 4055 ST. VINCENT AVE, SHREVEPORT, LA 71108, Amount Awarded: $1,561
CREDIT COUNS. CENTERS OF OKLAHOMA, P.O. BOX 4450, TULSA, OK 74159, Amount Awarded: $39,939
METROPOLITAN TULSA URBAN LEAGUE, 240 E. APACHE, TULSA, OK 74106, Amount Awarded: $1,750
CCCS OF NEW MEXICO, 2727 SAN PEDRO N.E., ALBUQUERQUE, NM 87110, Amount Awarded: $5,962
UNITED METH. URBAN MINISTRY OF WICHITA, 1611 NORTH MOSLEY, WITCHITA, KS 67214, Amount Awarded: $2,000
MO VALLEY HUMAN RES. COMM. ACT AGCY, P.O. BOX 550, MARSHALL, MO 65340, Amount Awarded: $1,000
GREATER KANSAS CITY HSG INFO CENTER, 3810 PASEO, KANSAS, MO 64109, Amount Awarded: $35,000
HAWKEYE AREA COMMUNITY ACTION PROGRAM, P.O. BOX 789, CEDAR RAPIDS, IA 52406, Amount Awarded: $6,000
FAMILY HOUSING ADVISORY SERVICES, INC, 2416 LAKE STREET, OMAHA, NB 68111, Amount Awarded: $23,821
URBAN LEAGUE OF WICHITA, INC., 1405 N. MINNEAPOLIS, WICHITA, KS 67214, Amount Awarded: $12,500
CNTR FOR INDP. LIVING OF CEN. NEB. INC, 1804 SOUTH EDDY ST., GRAND ISLAND, NE 68801, Amount Awarded: $6,000
NORTH AREA COMMUNITY FORUM, 1005 DUNN ROAD, FLORISSANT, MO 63031, Amount Awarded: $12,000
CITY OF DES MOINES, 602 E 1ST STREET, DES MOINES, IA 50307, Amount Awarded: $9,500
CCCS OF ST. LOUIS, INC., 1300 HAMPTON AVENUE, ST LOUIS, MO 63139, Amount Awarded: $21,920
HOUSING & CREDIT COUNSELING, INC., 1195 SW BUCHANAN, TOPEKA, KS 66604, Amount Awarded: $9,205
W. CENTRAL MISSOURI COMM. ACTION AGENCY, 106 W. 4TH, APPLETON CITY, MO 64724, Amount Awarded: $4,320
ECONOMIC OPPORT. FOUND. INC, 1542 MINNESOTA AVE, KANSAS CITY, KS 66102, Amount Awarded: $10,000
NEIGHBORHOOD PLACE INC., 1128 W. 6TH STREET, DAVENPORT, IA 52802, Amount Awarded: $3,500
LINCOLN ACTION PROGRAM, INC., 2202 SOUTH 11TH ST., LINCOLN, NE 68502, Amount Awarded: $2,500
A.I.D.(ASSISTANCE, INFO, DIRECTION), 206 6TH STREET, SIOUX CITY, IA 51101, Amount Awarded: $5,651
CONSUMER CREDIT COUNSELING SERVICE, INC, 1201 W. WALNUT, SALINA, KS 67402, Amount Awarded: $5,000
NORTHSIDE RESIDENTIAL HOUSING CORP., 5647 DELMAR, ST. LOUIS, MO 63112, Amount Awarded: $14,500
HSG OPTIONS PROVIDED F/THE ELDERLY, 4265 SHAW, ST. LOUIS, MO 63110, Amount Awarded: $2,079
URBAN LEAGUE OF METRO. ST. LOUIS, 3701 GRANDEL SQUARE, ST. LOUIS, MO 63108, Amount Awarded: $36,000
ADAMS COUNTY H.A., 7190 COLORADO BLVD, COMMERCE CITY, CO 80022, Amount Awarded: $60,000
BOULDER COUNTY H.A., 2040 14TH STREET, BOULDER, CO 80306, Amount Awarded: $34,495
BROTHER'S REDEVELOPMENT, 1111 OSAGE STREET, DENVER, CO 80204, Amount Awarded: $75,000
CATHOLIC SOCIAL SERVICES, 302 JEFFERSON STREET, PUEBLO, CO 81004, Amount Awarded: $25,000
CITY OF AURORA HOMEOWNERSHIP ASSIST. PROGRAM, 9801 E. COLFAX AVE., AURORA, CO 80010, Amount Awarded: $50,000
CCCS OF N. COLORADO S.E. WY, 1136 E. STUART, FT COLLINS, CO 80525, Amount Awarded: $13,500
CCCS OF S. COLORADO, 1233 LAKE PLAZA DR., COLO SPRINGS, CO 80906, Amount Awarded: $56,000
NEIGHBOR-TO-NEIGHBOR, 424 PINE STREET, FT. COLLINS, CO 80524, Amount Awarded: $24,350
N.E. DENVER HOUSING CENTER, 1735 GAYLORD STREET, DENVER, CO 80206, Amount Awarded: $13,920
S.W. COMMUNITY RESOURCES, 295 GIRARD STREET, DURANGO, CO 81301, Amount Awarded: $972
MOUNTAINLAND COMMUNITY ACTION, 257 E. CENTER STREET, PROVO, UT 84606, Amount Awarded: $6,500
SALT LAKE COMMUNITY ACTION PROGRAM, 764 S. 200 WEST, SALT LAKE CITY, UT 84101, Amount Awarded: $50,000
UTAH ST. UNIVERSITY, FAMILY LIFE CEN, 490 N. 700 E., LOGAN, UT 84321, Amount Awarded: $20,000
YOUR COMMUNITY CONNECTION, 2261 ADAMS AVENUE, OGDEN, UT 84401, Amount Awarded: $20,000
COMMUNITY ACTION OPPORTUNITIES, 420 3RD STREET, S.W., MINOT, ND 58702, Amount Awarded: $20,000
COMMUNITY ACTION PROGRAM/REG VII, 2105 LEE AVENUE, BISMARK, ND 58504, Amount Awarded: $2,500
QUAD CTY COMM. ACTION AGENCY, 27 1/2 S. 3RD STREET, GRAND FORKS, ND 58201, Amount Awarded: $5,016
S.E. NORTH DAKOTA COMM ACTION AGENCY, 3233 S. UNIVERSITY DR., FARGO, ND 58108, Amount Awarded: $12,000
CCCS OF THE BLACK HILLS, 621 6TH, RAPID CITY, SD 57709, Amount Awarded: $15,230
CCCS OF LUTHERAN SOCIAL SERVICES, 705 E. 41ST STREET, SIOUX FALLS, SD 57105, Amount Awarded: $5,000
DIST. 7 HUMAN RESOURCES DEV. COUNCIL, 17 N. 31ST STREET, BILLLINGS, MT 59103, Amount Awarded: $14,000
NW MONTANA HUMAN RESOURCES, #8 1ST & MAIN BLDG., KALISPELL, MT 59904, Amount Awarded: $4,000
CITY OF PHOENIX NEIGHBORHOOD SERV., 200 W. WASHINGTON, PHOENIX, AZ 85003, Amount Awarded: $150,000
CCCS SOUTHWEST, 2535 W. CMLBACK ROAD, PHOENIX, AZ 85017, Amount Awarded: $90,000
CPLC PHOENIX, 1112 E. BUCKEYE ROAD, PHOENIX, AZ 85034, Amount Awarded: $48,824
PHOENIX COMM. HSG RES. BOARD, 3627 E. IND. SCH. RD, PHOENIX, AZ 85108, Amount Awarded: $12,000
CPLC, 1525 N. ORACLE ROAD, TUCSON, AZ 85705, Amount Awarded: $40,000
CATHOLIC SOCIAL SERVICES, 155 W. HELEN STREET, TUCSON, AZ 85705, Amount Awarded: $35,000
CCC SOUTHWEST, 3810 N. ORACLE ROAD, TUCSON, AZ 85705, Amount Awarded: $28,000
CITY OF OAKLAND, 300 LAKESIDE DRIVE, OAKLAND, CA 94612, Amount Awarded: $12,222
SANTA CRUZ HOUSING AUTHORITY, 2160 41ST AVENUE, CAPITOLA, CA 95010, Amount Awarded: $3,973
COUNCIL ON AGING SON, 730 BENNETT VALLEY, SANTA ROSA, CA 95404, Amount Awarded: $4,000
PAC COMMUNITY SERVICE, 501 RAILROAD AVENUE, PITTSBURG, CA 94565, Amount Awarded: $15,000
ECHO, 770 A STREET, HAYWARD, CA 94541, Amount Awarded: $27,000
CITY OF VACAVILLE, 40 ELDRIDGE AVENUE, VACAVILLE, CA 95688, Amount Awarded: $21,000
PROJECT SENTINEL, 10 DEMPSEY ROAD, MILPITAS, CA 95035, Amount Awarded: $32,000
PROJECT MATCH, 555 MERIDAN, SUITE C, SAN JOSE, CA 95126, Amount Awarded: $1,960
HUMAN INVESTMENT PROJECT, 364 S. RAILROAD AVE., SAN MATEO, CA 94401, Amount Awarded: $6,000
BETTER VALLEY SERVICES, 8000 LAUREL CITY BLVD, N. HOLLYWOOD, CA 91605, Amount Awarded: $80,000
WESTMINSTER, 1776 E CENTURY BLVD, LOS ANGELES, CA 90002, Amount Awarded: $62,000
SANTA BARBARA HOUSING AUTHORITY, 815 W. OCEAN AVE., LOMPOC, CA 93436, Amount Awarded: $35,000
CCCS—LOS ANGELES, 1308 W. 8TH STREET, LOS ANGELES, CA 90017, Amount Awarded: $100,000
INLAND MED. BOARD, 420 N. LEMON AVENUE, ONTARIO, CA 91764, Amount Awarded: $48,000
FAIR HOUSING COUNCIL OF ORANGE, 1222 N. BROADWAY, SANTA ANA, CA 92701, Amount Awarded: $42,420
CATHOLIC CHARITIES, 150 N. OLIVE STREET, COLTON, CA 92324, Amount Awarded: $18,000
NEIGHBORHOOD HOUSING ASSOCIATION, 3043 4TH AVENUE, SAN DIEGO, CA 92103, Amount Awarded: $61,020

SAN DIEGO HOME LN., 2859 EL CAJON BLVD., SAN DIEGO, CA 92104, Amount Awarded: $70,300
CCCS OF SAN DIEGO, 1550 HOTEL CIRCLE, N., SAN DIEGO, CA 92108, Amount Awarded: $33,200
SACRAMENTO HOME LN., 2617 K STREET, SACRAMENTO, CA 95816, Amount Awarded: $4,269
STANISLAUS HOUSING AUTHORITY, 1701 ROBERTSON ROAD, MODESTO, CA 95351, Amount Awarded: $25,000
PPPT, 1801 N. J STREET, LAS VEGAS, NV 89103, Amount Awarded: $17,500
CCCS OF LAS VEGAS, 3650 S. DECATUR, LAS VEGAS, NV 89103, Amount Awarded: $16,000
HALE MAHALOU, 200 HINA AVENUE, KAHULUI, HI 96732, Amount Awarded: $4,000
CCCS OF HAWAII, 2153 N. KING STREET, HONOLULU, HI 96819, Amount Awarded: $49,000
ANCHORAGE NEIGHBORHOOD HGS SERV., 3700 WOODLAND DRIVE, ANCHORAGE, AK 99517, Amount Awarded: $6,000
CCC OF ALASKA, 208 E. 4TH AVENUE, ANCHORAGE, AK 99501, Amount Awarded: $10,000
COMMUNITY ACTION AGENCY, 124 NEW 6TH STREET, LEWISTON, ID 83501, Amount Awarded: $17,000
UMPQUA COMMUNITY ACTION NETWORK, 2448 W. HARVARD, ROSEBURG, OR 97470, Amount Awarded: $20,000
HOUSING SERVICES OF OREGON, 34420 SW TV HWY, HILLSBORO, OR 97123, Amount Awarded: $18,020
ACCESS INC., 48 HAWTHORNE STREET, MEDFORD, OR 97501, Amount Awarded: $10,000
PORTLAND HOUSING CENTER, 1605 45TH AVENUE, PORTLAND, OR 97213, Amount Awarded: $10,000
FREMONT PUBLIC ASSOCIATION, P.O. BOX 31151, SEATTLE, WA 98013, Amount Awarded: $12,086
ABERDEEN NEIGHBORHOOD HOUSING SERV., 710 E. MARKET STREET, ABERDEEN, WA 98520, Amount Awarded: $15,000
URBAN LEAGUE OF METROP. SEATTLE, 105 14TH AVENUE, SEATTLE, WA 98122, Amount Awarded: $35,085
PIERCE COUNTY COMM. ACTION DEPT., 8811 S. TACOMA WAY, TACOMA, WA 98499, Amount Awarded: $20,000
LA CLINICA MIGRANT HEALTH CENTER, 1517 N. 5TH AVENUE, PASCO, WA 99301, Amount Awarded: $27,000
SPOKANE NEIGHBORHOOD ACTION PROGRAM, E. 2116 FIRST AVE., SPOKANE, WA 99202, Amount Awarded: $60,000
HOUSING COUNCIL OF MONROE COUNTY, 111 EAST AVENUE, ROCHESTER, NY 14604, Amount Awarded: $50,000
CCCS OF CENTRAL FLORIDA, INC., 455 SOUTH ORANGE AVE, ORLANDO, FL 32801, Amount Awarded: $150,010
CCCS OF FAM. COUNSL CEN. OF BREVARD, 220 CORAL SANDS DR., ROCKLEDGE, FL 32955, Amount Awarded: $8,971
METROPOLITAN LUTHERAN MINISTRY, 3031 HOLMES STREET, KANSAS CITY, MO 64109, Amount Awarded: $18,375

[FR Doc. 96–3231 Filed 2–13–96; 8:45 am]

BILLING CODE 4210–33–P

DEPARTMENT OF THE INTERIOR

Bureau of Land Management

[WO–320–4130–02–24 1A]

RIN 1004–AC39

Notice of Proposed Information Collection

AGENCY: Bureau of Land Management, Interior.

ACTION: Notice and request for comments.

SUMMARY: In accordance with the Paperwork Reduction Act of 1995, the Bureau of Land Management (BLM) is announcing its intention to request approval for the collection of information annually from holders of unpatented mining claims concerning use and occupancy of their claims.

DATES: Comments on the proposed information collection must be received by April 15, 1996 to be assured of consideration.

ADDRESSES: Comments may be mailed to: Regulatory Management Team (420), Bureau of Land Management, 1849 C Street NW., Room 401LS, Washington, D.C. 20240.

Comments may be sent via Internet to: WO140@attmail.com. Please include ''ATTN: U&O-Info'' and your name and return address in your Internet message. Comments may be hand-delivered to the Bureau of Land Management Administrative Record, Room 401, 1620 L Street NW., Washington, DC. Comments will be available for public review at the L Street address during regular business hours (7:45 a.m. to 4:15 p.m.), Monday through Friday.

FOR FURTHER INFORMATION CONTACT: Richard E. Deery, (202) 452–0353.

SUPPLEMENTARY INFORMATION: In accordance with 5 CFR 1320.8(d) BLM is required to provide 60-day notice in the Federal Register concerning a proposed collection of information to solicit comments on (a) whether the proposed collection of information is necessary for the proper performance of the functions of the agency, including whether the information will have practical utility; (b) the accuracy of the agency's estimate of the burden of the proposed collection of information, including the validity of the methodology and assumptions used; (c) ways to enhance the quality, utility, and clarity of the information to be collected; and (d) ways to minimize the burden of the collection of information on those who are to respond, including through the use of appropriate automated, electronic, mechanical, or other technological collection techniques or other forms of information technology. Accordingly, none of the information proposed to be collected as described below will be required until comments have been received and analyzed and approval has been obtained from OMB under 44 U.S.C. 3501 *et seq.* and a clearance number assigned.

In a proposed rule published in the Federal Register on September 11, 1992 (57 FR 41846), BLM proposed to established procedures for managing existing and future use and occupancy of mining claims on BLM-administered lands consistent with the mining law (30 U.S.C. 612) and the Federal Land Policy and Management Act of 1976 (43 U.S.C. 1733). Generally, under the terms of the proposed rule, any newly proposed activity on public lands involving occupancy or fencing to exclude the public would have to be acknowledged by BLM as reasonably related to mining prior to the initiation of occupancy or fencing. Under the proposed rule, anyone planning to use mining claims or the public lands under the mining law for occupancy would have to submit the following information to BLM, in addition to the information currently required by 43 CFR subparts 3802 and 3809:

1. A map is sufficient detail to identify the site and placement of (a) temporary or permanent structures, (b) fences and signs intended to exclude the public, and (c) public passage or access routes through or around the area; and

2. A written description of (a) how the proposed occupancy relates to activities reasonably incident to prospecting, mining, or processing operations, (b) how the proposed occupancy meets the standards of § 3715.2 of the proposed rule, and (c) the estimated period of use and schedule for removal and reclamation. The proposed rule would also allow a grace period during which existing occupancies would have to come into compliance with the provisions of the regulations. To take advantage of the grace period, existing occupancies would have to be recorded with BLM through submittal of the same information described above. The information is mandatory to obtain a benefit, use of the public lands open to the mining laws for occupancy reasonably incident to prospecting, mining, or processing operations.

Based on its review of comments on the proposed rule, BLM does not anticipate significant changes in the final rule. BLM is considering, however, changing the information requirements for existing occupancies by significantly reducing the up-front information required to obtain the one-year grace period. The reduction in the up-front reporting burden would be realized through the use of a simple form that takes about 10 minutes to fill out. The burden of providing the information would remain, but would be required for existing occupancies only after the benefit of the grace period is obtained. The information proposed to be collected from existing occupancies for recording purposes would subsequently be gathered by BLM field staff.

The public reporting burden for this entire collection, including the simplified form and collection of information during the inspection process, is estimated to average two hours per response. The respondents are mining claimants and operators of prospecting, exploration, mining, and processing operations. The number of responses per respondent is one per operation. The number of new responses is estimated to be 130 per year. The estimated total annual burden on new respondents is collectively 260 hours. The estimated number of respondents possessing existing occupancies is 1,950. The total annual burden on respondents with existing occupancies would be a function of the number of inspections carried out in any given year. The total burden for these respondents would collectively total 3,900 hours spread over a two- to three-year period, depending on the availability of funding to conduct inspections.

All responses to this notice will be summarized and included in the request for Office of Management and Budget approval. All comments will also become a matter of public record.

Dated: February 7, 1996.

Annetta Cheek,

Leader, Regulatory Management Team.

[FR Doc. 96–3055 Filed 2–13–96; 8:45 am]

BILLING CODE 4310–84–M

[OR–030–00–1220–04; G6–010]

Notice of Prohibited Acts in the Wallowa/Grande Ronde Rivers Area

AGENCY: Vale District, Baker Resource Area, Oregon, Bureau of Land Management.

ACTION: Notice of prohibited acts and restrictions within the boundaries of the Wallowa/Grande Ronde Rivers Final Management Plan.

SUMMARY: The Vale District is initiating certain closures and restrictions as part of the implementation of the 1993 Wallowa/Grande Ronde Rivers Final Management Plan, and in order to protect and enhance the outstandingly remarkable values (ORV's) for which the river was designated. The closures and restrictions are the minimum necessary to protect ORV's and maintain recreation opportunities. Personnel that are exempt from the closures and restrictions include any Federal, State, or local officer, or member of any organized rescue or fire-fighting force in performance of an official duty, or any person authorized by the Bureau of Land Management. Pursuant to 43 CFR 8351.2–1(f), the following acts are prohibited on all public lands within the boundaries identified on the Wallowa/Grande Ronde Rivers Administered by the Bureau of Land Management:

Violation of these prohibitions is punishable by a fine of not more than $500 or imprisonment for not more than 6 months or both. (Title 16 U.S.C. 1281) and (Title 16 U.S.C. section 3).

1. Camping

A. Camping in any area posted as ''Closed'' to that use.

B. Installation of permanent camping facilities.

C. Camping below high water line.

2. Fire

A. Building or maintaining any open campfires except those contained in a fireblanket, firepan or similar metal container with sides measuring at least 2'' in height.

B. Failure to remove campfire debris from the river corridor and disposing of it in a refuse container.

3. Sanitation and Refuse

A. Disposing of refuse in other than refuse receptacles.

B. Leaving campground equipment, site alterations or refuse after departing any campsite or in any unoccupied campsite.

C. Disposal of solid human waste except at designated locations or facilities provided for that purpose.

4. Vehicles

Accessing the river corridor by motor vehicle in areas closed to that use.

B. Operation of a motor vehicle in violation of any Oregon or Washington State law.

5. Other Acts

A. Failure to possess a commercial guide permit as required by the Bureau of Land Management (Baker Resource Area) and United States Forest Service (Walla Walla Ranger District).

B. Taking, attempting to take, or possession of any fish or wildlife in violation of any Oregon or Washington State law or other regulation.

C. Defacing, disturbing, or removing any historic or prehistoric feature or artifact.

D. Violation by commercial permittees of any stipulation outlined in the Guidelines for Commercial Use of Rivers in the Vale District, in cooperation with United States Forest Service (Walla Walla Ranger District).

E. Violation of any Oregon State Marine Board regulation.

The lands administered by the Bureau of Land Management to which this order applies are within the administrative boundary of the Wallowa/Grande Ronde Rivers. Legal Description of the administrative boundary can be viewed at the Vale District office or is available in the above mentioned management plan.

FOR FURTHER INFORMATION CONTACT: Gloria Brown, Baker Resource Area Manager, Bureau of Land Management, 1550 Dewey Avenue, Baker City, OR 97814, Telephone 541 523–1256.

James E. May,

District Manager.

[FR Doc. 96–3214 Filed 2–13–96; 8:45 am]

BILLING CODE 4310–33–M

[ES–030–6–1430–02]

Notice of Intent; Prepare Michigan Lighthouse Planning Analysis/ Environmental Assessment

ACTION: Notice of Intent.

SUMMARY: The Bureau of Land Management (BLM), Milwaukee District, is initiating the preparation of a Michigan Lighthouse Planning Analysis/Environmental Assessment (PA/EA) to address the future management and treatment of properties withdrawn for lighthouse purposes in the State of Michigan.

This notice is issued pursuant to Title 43, CFR, Sec. 1610.2 (C). The planning effort will follow the procedures set forth in 43 CFR, Subpart 1600.

The public is invited to participate in this land use planning effort. The BLM is seeking written comments providing suggestions, solutions and criteria for the long-term management of the public domain tracts withdrawn for lighthouse purposes in the State of Michigan.

DATES: Comments relating to the identification of additional issues and long-term management criteria will be accepted until March 14, 1996.

ADDRESSES: Comments should be sent to Bureau of Land Management, Milwaukee District Office, P.O. Box 631, Milwaukee, Wisconsin 53201–0631.

FOR FURTHER INFORMATION CONTACT: Larry Johnson at 414–297–4413 or Ed Ruda at 703–440–1671.

SUPPLEMENTARY INFORMATION: The United States Coast Guard (USCG) currently has jurisdictional authority over a number of parcels of public domain lands withdrawn between 1850 and 1920 for lighthouse purposes. The USCG has determined that these withdrawals are no longer needed for lighthouse purposes and has filed notices of relinquishment with the BLM under 43 CFR 2370.

The BLM has completed, or will be conducting, suitability determinations under 43 CFR 2372. These suitability determinations will decide whether all, or some, of the withdrawn parcels are suitable for return to the public domain. Those withdrawals found to be unsuitable for return to the public domain will be referred to the General Services Administration for disposal. Any withdrawn lands found to be suitable for return to the public domain will become the administrative responsibility of the BLM until such time that a decision is made on the disposition of the property. If the decision is made to dispose, transfer, or lease the lighthouse properties, the Michigan Lighthouse PA/EA will provide BLM managers with the authority to finalize these actions.

The plan will also consider alternatives which include management of the properties through partnership agreements with other Federal or State agencies, local governments, private historic preservation, recreational or conservation groups.

The issues BLM has identified thus far include:

1. How will significant historic, archaeological, and natural resources be protected?

2. Should BLM continue to manage the stations by itself or through partnerships with other government agencies, local lighthouse preservation, historical societies or conservation groups?

3. Should the lands be transferred to another Federal agency, such as the National Park Service, Fish and Wildlife Service or Forest Service?

4. Should the lands be transferred, leased or sold out of Federal Ownership?

Listed are those properties, to date, for which BLM has received notices from the USCG relinquishing their management responsibilities:

Big Sable (MIES–012614)
Section 7, T.19N., R.18W., Mason County, MI
Eagle Harbor (MIES–047394)
Section 6, T.58N., R.30W., Keweenaw County, MI
Grand Traverse (MIES–016817)
Lots 2 & 3, Section 6, T.32N., R.10W., Leelanau County, MI
Manitou Island Lighthouse (MIES–019212)
Section 15, T.58N., R.26W., Keweenaw County, MI
Manitou Island (MIES–002777)
Section 17, 20 & 21, T.58N., R.26W., Keweenaw County, MI
Passage Island (MIES–010244)
Section 18, T.67N., R.32W., Keweenaw County, MI
Point Betsie (MIES–033804)
Lot #5, Section 4, T.26N., R.16W., Benzie County, MI
Poverty Island (MIES–002537)
Section 8 & 9, T.36N., R.19W., Delta County, MI
Presque Isle (MIES–017076)
Section 8, T.34N., R.8E., Presque Isle County, MI
Thunder Bay (MIES–012677)
Section 3, T.30N., R.10E., and Lot #5, Section 33, Fractional Section 34, T.31N., R.10E., Alpena County, MI
Whitefish Point (MIES–047725)
Section 32, T.51N., R.5W., Chippewa County, MI

As additional relinquishment notices are received, the management decisions relating to the withdrawn lighthouse properties will be made using the same criteria as described in the final Michigan Lighthouse PA/EA document.

The planning issues and long-term management solutions will be available for public comment and subject to change based upon such public comments. The planning team, consisting of a number of Eastern States' technical specialists, will seek public involvement throughout the planning process. Currently, the BLM does not plan to hold public meetings. BLM will consider holding public meetings if significant public interest is expressed.

Complete records of all phases of the planning process will be available for public review and comment at the Bureau of Land Management, Milwaukee District Office, 310 West Wisconsin Avenue, Suite 450, Milwaukee, Wisconsin. Draft and final documents will be available upon request.

Dated: February 2, 1996.

Chris Hanson,

Acting District Manager.

[FR Doc. 96–3302 Filed 2–13–96; 8:45 am]

BILLING CODE 4310–GJ–P

[CA–063–1150–00]

Public Workshops for the Northern & Eastern Colorado Desert Coordinated Management Plan

SUMMARY: Notice is hereby given, in accordance with Public Laws 92–463 and 94–579, that a series of multi-agency meetings have been scheduled to update the public on the status of the Northern and Eastern Colorado Desert Coordinated Management Plan. The agencies urge interested individuals and organizations to review progress and offer specific suggestions on the preparation of the draft plan. The following public workshops are scheduled:

Monday, March 4, 7–10 p.m.
Holiday Inn, 2640 Lakewood Boulevard, Long Beach CA.
Wednesday, March 6, 7–10 p.m.
U.S. Forest Service, Cleveland National Forest, 10845 Rancho Bernardo Road, Suite 200, Rancho Bernardo, CA
Monday, March 11, 7–10 p.m.
BLM Palm Springs Resource Area, 63–500 Garnet Avenue, Palm Springs, CA
Wednesday, March 13, 7–10 p.m.
Blythe City Council Chambers, 220 North Spring Street, Blythe, CA
Tuesday, March 5, 7–10 p.m.
Imperial Irrigation District, 1285 Broadway, El Centro, CA
Thursday, March 7, 7–10 p.m.
BLM Riverside District Office, 6221 Box Springs Boulevard, Riverside, CA
Tuesday, March 12, 7–10 p.m.
BLM Needles Resource Area Office, 101 W. Spike's Road, Needles, CA
Thursday, March 14, 7–10 p.m.
Joshua Tree National Park, Park Headquarters, 54485 Joshua Tree National Park, Twentynine Palms, CA

ADDITIONAL INFORMATION: The purpose of the meetings includes: Updating the public on the status of the Plan, including the scope and summarized issues that will guide decision making; invite public inspection of some of the information collected on resources and uses that will be used in analyzing values and conflicts and in making decisions, focusing on wildlife habitats and the vehicle routes of travel inventories: gather public comment about the plan's direction and process to

date; the information that has been gathered; and advising the public how to review and study the information gathered and obtain copies of some of the data to be better prepared to review and comment on the draft plan when it is issued.

FOR MORE INFORMATION AND MEETING CONFIRMATION: Contact the Bureau of Land Management, California Desert District, External Affairs Office, 6221 Box Springs Boulevard, Riverside, California 92507; (909) 697–5215.

Dated: February 7, 1996.

Alan Stein,

Acting District Manager.

[FR Doc. 96–3148 Filed 2–13–96; 8:45 am]

BILLING CODE 4310–FP–M

[ES–030–6–1430–01; WIES–044180 & WIES–044183]

Notice of Realty Action; Sale of Public Land; Wisconsin

SUMMARY: The following land in Taylor County, Wisconsin has been found suitable for sale under authority of the Color-of-Title Act of December 22, 1928, as amended July 28, 1953, 43 U.S.C. 1068, 1068a (1982), as a claim of Class I at the estimated fair market value less equities presented by the applicant. The land will not be offered for sale until at least 60 days after the date of this notice.

Fourth Principal Meridian,

T.33N., R.2E.
Sec. 20, Lot #7 & #10
Containing 37.27 acres.

The land described is hereby segregated from appropriation under the public land laws, including the mining laws, pending disposition of this action or 270 days from the date of publication of this notice, whichever occurs first.

This land is being offered by direct sale to Arden and Donald Wiitala and James Hill. The mineral interest will not be conveyed simultaneously. Acceptance of the direct sale offer will qualify the purchaser to make application for conveyance of those mineral interests under Sec. 209 of the Federal Land Policy and Management Act of 1976 (90 Stat. 2750, 43 U.S.C. 1713).

The patent, when issued, will contain certain reservations to the United States. Detailed information concerning these reservations as well as specific conditions of the sale are available for review at the Milwaukee District Office, Bureau of Land Management, 310 West Wisconsin Avenue, Suite 450, Milwaukee, Wisconsin 53203.

DATES: For a period of 45 days from the date of publication of this notice, in the Federal Register, interested parties may submit comments to the District Manager, Milwaukee District, at the above address. In the absence of timely objections, this proposal shall become the final determination of the Department of the Interior.

ADDRESSES: Detailed information concerning this sale is available at the Milwaukee District Office, Bureau of Land Management, 310 West Wisconsin Avenue, Suite 450, Milwaukee, Wisconsin 53203.

FOR FURTHER INFORMATION CONTACT: Larry Johnson at 414–297–4413.

Dated: January 30, 1996.

James W. Dryden,

District Manager.

[FR Doc. 96–3303 Filed 2–13–96; 8:45 am]

BILLING CODE 4310–GJ–P

National Park Service

National Register of Historic Places; Notification of Pending Nominations

Nominations for the following properties being considered for listing in the National Register were received by the National Park Service before February 3, 1996. Pursuant to section 60.13 of 36 CFR Part 60 written comments concerning the significance of these properties under the National Register criteria for evaluation may be forwarded to the National Register, National Park Service, P.O. Box 37127, Washington, D.C. 20013-7127. Written comments should be submitted by February 29, 1996.

Carol D. Shull,

Keeper of the National Register.

COLORADO

Clear Creek County

Dumont School, 150 Co. Rd. 260, Dumont, 96000201.

La Plata County

Rochester Hotel, 726 E. Second Ave., Durango, 96000200.

DISTRICT OF COLUMBIA

District of Columbia State Equivalent

Key, Francis Scott, Bridge, US 29 over the Potomac R., Washington, 96000199.

FLORIDA

Union County

Townsend, James W., House, 235 SW. 4th Ave., Lake Butler, 96000222.

GEORGIA

Bibb County

Lustron House at 3498 McKenzie Drive, (Lustron Houses in Georgia MPS), 3498 McKenzie Dr., Macon, 96000216.

De Kalb County

Farmer, Neville and Helen, Lustron House, (Lustron Houses in Georgia MPS), 513 Drexel Ave., Decatur, 96000211.

Pines, Russell and Nelle, Lustron House, (Lustron Houses in Georgia MPS), 2081 Sylvania Dr., Decatur, 96000207.

Dougherty County

Lustron House at 1005 Second Avenue, (Lustron Houses in Georgia MPS), 1005 Second Ave., Albany, 96000215.

Lustron House at 1001 Second Avenue, (Lustron Houses in Georgia MPS), 1001 Second Ave., Albany, 96000217.

Lustron House at 1200 Fifth Avenue, (Lustron Houses in Georgia MPS), 1200 Fifth Ave., Albany, 96000214.

Lustron House at 711 Ninth Avenue, (Lustron Houses in Georgia MPS), 711 Ninth Ave., Albany, 96000213.

Fulton County

Adams, Jack and Helen, Lustron House, (Lustron Houses in Georgia MPS), 832 Burchill St., SW., Atlanta, 96000212.

Epting, Thomas and Rae, Lustron House, (Lustron Houses in Georgia MPS), 1692 Brewer Blvd., SW., Atlanta, 96000210.

Knight, William and Ruth, Lustron House, (Lustron Houses in Georgia MPS), 1976 Northside Dr., Atlanta, 96000208.

Sumter County

Lustron House at 547 Oak Avenue, (Lustron Houses in Georgia MPS), 547 Oak Ave., Americus, 96000209.

LOUISIANA

Beauregard Parish

Beauregard Parish Training School, Jct. of Martin Luther King Dr. and Alexander St., DeRidder, 96000190.

Orleans Parish

TECUMSEH (towboat), Toulouse St. wharf, New Orleans, 96000202.

MINNESOTA

Meeker County

Litchfield Commercial Historic District, N. Sibley Ave. between Depot and 3rd Sts., Litchfield, 96000192.

Universal Laboratories Building, 901 First St. N., Dassel, 96000191.

MISSISSIPPI

Amite County

McGehee, Theodore L., Plantation House, 5924 Tangipahoa Rd., Summit vicinity, 96000189.

Bolivar County

Mound Bayou Bank, W. Main St., Mound Bayou, 96000187.

Copiah County

Copley, George Washington, House, (Copiah County MPS), 210 Copley St., Crystal Springs, 96000181.

Illinois Central Railroad Passenger Depot, (Copiah County MPS), 138 N. Ragsdale Ave., Hazlehurst, 96000182.
Marchetti Farm, (Copiah County MPS), 134 Dale Dr., Hazlehurst, 96000183.
Mississippi Mills Packing and Shipping Rooms, (Copiah County MPS), 2058 US 51, Wesson, 96000185.
Rea, James Samuel, House, (Copiah County MPS), 1193 US 51, Wesson, 96000184.

Hinds County

New Orleans Great Northern Railroad Passenger Depot, 618 Pearl St., Jackson, 96000188.

Madison County

Long Moss Plantation House, 305 Quail Rd., Canton vicinity, 96000180.

NEBRASKA

Dodge County

Fremont Post Office, Old, 605 N. Broad St., Fremont, 96000223.

Fillmore County

Cesko-narodni sin—Milligan Auditorium, Jct. of Main and Birch Sts., SW corner, Milligan, 96000224.

NEW HAMPSHIRE

Hillsborough County

Goffstown Congregational Church, 10 Main St., Goffstown, 96000193.
Peterborough Town House, 1 Grove St., Peterborough, 96000194.

NEW JERSEY

Monmouth County

Chaunncy Jerome Jr Shipwreck Site, Address Restricted, Long Branch City vicinity, 96000205.

NEW YORK

Greene County

Prattsville Commercial Building, NY 23, Prattsville, 96000203.

Livingston County

Murray Street Historic District, (Mount Morris MPS), 33—47 and 32—46 Murray St., Mount Morris, 96000178.
South Main Street Historic District, (Mount Morris MPS), 123—159 and 124—158 S. Main St., Mount Morris, 96000177.
State and Eagle Streets Historic District, (Mount Morris MPS), 16—34 and 15—39 State St. and 6—12 Eagle St., Mount Morris, 96000179.

Nassau County

Jerusalem District No. 5 Schoolhouse, Old Jerusalem Rd., Levittown, 6000204.

Westchester County

Mandel, Richard H., House, 323 Haines Rd., Bedford Hills, 96000176.

NORTH CAROLINA

Avery County

Crossnore Presbyterian Church, US 221/NC 194 E side, opposite jct. with Dellinger Rd., Crossnore, 96000206.

Buncombe County

Weaverville United Methodist Church, 85 N. Main St., Weaverville, 96000195.

Guilford County

Taplin, A. E., Apartment Building, 408 W. Parkway Ave., High Point, 96000196.

Mecklenburg County

Hopewell Presbyterian Church and Cemetery, 10500 Beatties Ford Rd., Huntersville vicinity, 96000198.

Orange County

Hogan, Alexander, Plantation, Address Restricted, Chapel Hill vicinity, 96000186.

Wake County

Kamphoefner, Henry L., House, (Early Modern Architecture Associated with NCSU School of Design Faculty MPS), 3060 Granville Dr., Raleigh, 96000197.

OHIO

Delaware County

Historic Northwest District, Roughly bounded by Pennsylvania Ave., N. Sandusky St., W. William St., Elizabeth St., W. Fountain St. and N. Franklin St, Delaware, 96000225.

Hamilton County

Gruen Watch Company—Time Hill, 401 E. McMillan St., Cincinnati, 96000219.

Portage County

Mott Drug Store, 8107 Main St., Garrattsville, 96000221.

Summit County

Diamond Match Historic District, 3, 21 and 27 Fourth St., NW. and 8 Second St., NW., Barberton, 96000218.

SOUTH CAROLINA

McCormick County

Calhoun—Gibert House, SC Sec. Rd. 33–60, Willington, 96000220.

[FR Doc. 96–3240 Filed 2–13–96; 8:45 am]

BILLING CODE 4310–70–P

INTERNATIONAL TRADE COMMISSION

[Investigations Nos. 731–TA–741–743 (Preliminary)]

Melamine Institutional Dinnerware From China, Indonesia, and Taiwan

AGENCY: United States International Trade Commission.

ACTION: Institution and scheduling of preliminary antidumping investigations.

SUMMARY: The Commission hereby gives notice of the institution of preliminary antidumping Investigations Nos. 731–TA–741–743 (Preliminary) under section 733(a) of the Tariff Act of 1930 (the Act) as amended by section 212(b) of the Uruguay Round Agreements Act (URAA), Pub. L. 103–465, 108 Stat. 4809 (1944) (19 U.S.C. 1673b(a)) to determine whether there is a reasonable indication that an industry in the United States is materially injured or threatened with material injury, or the establishment of an industry in the United States is materially retarded, by reason of imports from China, Indonesia, and Taiwan of melamine institutional dinnerware, provided for in subheadings 3924.10.20, 3924.10.30, and 3924.10.50 of the Harmonized Tariff Schedule of the United States, that are alleged to be sold in the United States at less than fair value. Unless the Department of Commerce extends the time for initiation pursuant to section 732(c)(1)(B) of the Act (19 U.S.C. 1673a(c)(1)(B)), the Commission must complete preliminary antidumping investigations in 45 days, or in this case by March 22, 1996. The Commission's views are due at the Department of Commerce within five business days thereafter, or by March 29, 1996.

For further information concerning the conduct of these investigations and rules of general application, consult the Commission's Rules of Practice and Procedure, part 201, subparts A through E (19 CFR part 201), and part 207, subparts A and B (19 CFR part 207).

EFFECTIVE DATE: February 6, 1996.

FOR FURTHER INFORMATION CONTACT: Larry Reavis (202–205–3185), Office of Investigations, U.S. International Trade Commission, 500 E Street SW., Washington, DC 20436. Hearing-impaired persons can obtain information on this matter by contacting the Commission's TDD terminal on 202–205–1810. Persons with mobility impairments who will need special assistance in gaining access to the Commission should contact the Office of the Secretary at 202–205–2000. General information concerning the Commission may also be obtained by accessing its internet server (http://www.usitc.gov or ftp://ftp.usitc.gov).

SUPPLEMENTARY INFORMATION:

Background

These investigations are being instituted in response to a petition filed on February 6, 1996, by the American Melamine Institutional Tableware Association (AMITA).[1]

Participation in the Investigations and Public Service List

Persons (other than petitioners) wishing to participate in the investigations as parties must file an entry of appearance with the Secretary

[1] The members of AMITA are Continental/SiLite International Co., Oklahoma City, OK; Lexington United Corp. (National Plastics Corp.), Port Gibson, MS; and Plastics Manufacturing Co., Dallas, TX.

to the Commission, as provided in sections 201.11 and 207.10 of the Commission's rules, not later than seven days after publication of this notice in the Federal Register. The Secretary will prepare a public service list containing the names and addresses of all persons, or their representatives, who are parties to these investigations upon the expiration of the period for filing entries of appearance.

Limited Disclosure of Business Proprietary Information (BPI) Under an Administrative Protective Order (APO) and BPI Service List

Pursuant to section 207.7(a) of the Commission's rules, the Secretary will make BPI gathered in these preliminary investigations available to authorized applicants under the APO issued in the investigations, provided that the application is made not later than seven days after the publication of this notice in the Federal Register. A separate service list will be maintained by the Secretary for those parties authorized to receive BPI under the APO.

Conference

The Commission's Director of Operations has scheduled a conference in connection with these investigations for 9:30 a.m. on February 27, 1996, at the U.S. International Trade Commission Building, 500 E Street SW., Washington, DC. Parties wishing to participate in the conference should contact Larry Reavis (202–205–3185) not later than the day preceding the conference to arrange for their appearance. Parties in support of the imposition of antidumping duties in these investigations and parties in opposition to the imposition of such duties will each be collectively allocated one hour within which to make an oral presentation at the conference. A nonparty who has testimony that may aid the Commission's deliberations may request permission to present a short statement at the conference.

Written submissions

As provided in sections 201.8 and 207.15 of the Commission's rules, any person may submit to the Commission on or before March 1, 1996, a written brief containing information and arguments pertinent to the subject matter of the investigations. Parties may file written testimony in connection with their presentation at the conference no later than three days before the conference. If briefs or written testimony contain BPI, they must conform with the requirements of sections 201.6, 207.3, and 207.7 of the Commission's rules.

In accordance with sections 201.16(c) and 207.3 of the rules, each document filed by a party to the investigations must be served on all other parties to the investigations (as identified by either the public or BPI service list), and a certificate of service must be timely filed. The Secretary will not accept a document for filing without a certificate of service.

Authority: These investigations are being conducted under authority of title VII of the Tariff Act of 1930, as amended by the URAA; this notice is published pursuant to section 207.12 of the Commission's rules.

Issued: February 8, 1996.

By order of the Commission.

Donna R. Koehnke,

Secretary.

[FR Doc. 96–3291 Filed 2–13–96; 8:45 am]

BILLING CODE 7020–02–P

INTERNATIONAL TRADE COMMISSION

[Investigation 332–366]

Country of Origin Marking: Review of Laws, Regulations, and Practices

AGENCY: International Trade Commission.

ACTION: Institution of investigation and scheduling of public hearing.

EFFECTIVE DATE: February 5, 1996.

SUMMARY: Following receipt on January 11, 1996, of a request from the Committee on Ways and Means, U.S. House of Representatives, the Commission instituted Investigation No. 332–366, Country of Origin Marking: Review of Laws, Regulations, and Practices, under section 332(g) of the Tariff Act of 1930 (19 U.S.C. 1332(g)). As requested by the Committee, the Commission will provide a report that will include the following:

(1) A legislative and administrative history of U.S. marking rules, including a comparison of the concepts and approaches for determining country of origin for foreign and domestic goods;

(2) An analysis of the administrative processes in the United States for determining origin and appealing decisions on marking issues; and

(3) An evaluation of the problems which the country of origin marking rules create for industry, and the benefits of these rules to consumers, including the costs to government and industry of enforcement and compliance.

As requested by the Committee, the Commission in its investigation will focus on the industries producing electronics, steel, pharmaceuticals, hand tools, and frozen vegetables; other industries where information is available will be studied as well. Staff will contact U.S. producers and consumer groups to identify those that have major concerns or interests regarding country of origin marking requirements. Committee staff has indicated that this should include problems, as identified by industry and other sources in the course of the investigation, with foreign country of origin marking requirements. The Commission expects to submit its report of the investigation to the Committee by July 11, 1996.

FOR FURTHER INFORMATION CONTACT: General information on the investigation may be obtained from Dennis Fravel, Office of Industries (202–205–3404) or Mark Paulson, Office of Industries (202–205–3429); and legal aspects of section 332 investigations, from William Gearhart, Office of the General Counsel (202–205–3091). The media should contact Margaret O'Laughlin, Office of Public Affairs (202–205–1819). Hearing impaired individuals are advised that information on this matter can be obtained by contacting the TDD terminal on (202–205–1810).

BACKGROUND: In its letter, the Committee noted that it had held hearings in July 1995, on the issues of rules of origin and country of origin markings for both foreign and domestic goods. The Committee noted that views expressed at the hearings ranged widely, and included requests to modify or eliminate country of origin marking requirements, and also to harmonize rules for domestic and imported goods.

This investigation will focus on country of origin markings, including certain rule of origin issues that directly effect country of origin marking. International rules of origin issues are currently being examined in the Commission's Investigation No. 332–360, *International Harmonization of Customs Rules of Origin,* instituted in April 1995 at the request of the U.S. Trade Representative. The Commission's proposed rules and analysis pertaining to harmonized rules of origin will be published at various intervals in the Federal Register.

PUBLIC HEARING: A public hearing in connection with the investigation will be held at the U.S. International Trade Commission Building, 500 E Street SW, Washington, DC, beginning at 9:30 a.m. on April 10, 1996. The Commission requests that testimony focus on the issues noted in the SUMMARY section above. All persons shall have the right

to appear, by counsel or in person, to present information and to be heard. Requests to appear at the public hearing should be filed with the Secretary, U.S. International Trade Commission, 500 E Street SW, Washington, DC 20436, no later than 5:15 p.m., March 20, 1996. Any prehearing briefs (original and 14 copies) should be filed not later than 5:15 p.m., March 27, 1996; the deadline for filing post-hearing briefs or statements is 5:15 p.m., April 25, 1996. In the event that, as of the close of business on March 27, 1996, no witnesses are scheduled to appear at the hearing, the hearing will be canceled. Any person interested in attending the hearing as an observer or non-participant may call the Secretary to the Commission (202–205–1816) after March 27, 1996, to determine whether the hearing will be held.

WRITTEN SUBMISSIONS: In lieu of or in addition to participating in the hearing, interested parties are invited to submit written statements concerning the matters to be addressed by the Commission in its report on this investigation. The Commission requests that written submissions focus on the issues noted in the SUMMARY section above. Commercial or financial information that a submitter desires the Commission to treat as confidential must be submitted on separate sheets of paper, each clearly marked ''Confidential Business Information'' at the top. All submissions requesting confidential treatment must conform with the requirements of section 201.6 of the Commission's Rules of Practice and Procedure (19 C.F.R. 201.6). All written submissions, except for confidential business information, will be made available in the Office of the Secretary of the Commission for inspection by interested parties. To be assured of consideration by the Commission, written statements relating to the Commission's report should be submitted to the Commission at the earliest practical date and should be received no later than the close of business on April 25, 1996. All submissions should be addressed to the Secretary, U.S. International Trade Commission, 500 E Street SW, Washington, DC 20436. Persons with mobility impairments who will need special assistance in gaining access to the Commission should contact the Office of the Secretary at 202–205–2000.

Issued: February 6, 1996.

By order of the Commission.

Donna R. Koehnke,

Secretary.

[FR Doc. 96–3290 Filed 2–13–96; 8:45 am]

BILLING CODE 7020–02–P

INTERNATIONAL TRADE COMMISSION

Notice of Extension of the Terms of Certain Section 337 Exclusion Orders in Conformity With Section 532(a) of the Uruguay Round Agreements Act

AGENCY: International Trade Commission.

ACTION: Notice.

SUMMARY: Notice is hereby given that the terms of patent-based exclusion orders issued in the investigations listed below have been extended in conformity with the provisions of section 532(a) of the Uruguay Round Agreements Act (URAA), Pub. L. No. 103–465, 108 Stat. 4809, 4983–4985 (1994) (codified at 35 U.S.C. §§ 154(a)(2) and 154(c)(1)).

Investigation	U.S. patent No.	Expiration date
337–TA–59 ..	4,113,147	June 6, 1997.
337–TA–114	4,131,869	June 21, 1996.
337–TA–140	4,136,359	April 11, 1997.
337–TA–161	4,109,343	March 10, 1996.
337–TA–170	4,356,600	August 25, 2000.
337–TA–170	4,394,791	May 26, 2001.
337–TA–174	4,174,100	March 27, 1998.
337–TA–174	4,436,126	September 17, 2001.
337–TA–228	4,494,028	September 30, 2002.
337–TA–240	4,392,476	December 23, 2000.
337–TA–254	4,577,263	June 6, 2004.
337–TA–276	4,223,394	February 13, 1999.
337–TA–276	4,519,050	June 17, 2002.
337–TA–276	4,103,189	October 1, 1996.
337–TA–276	4,685,084	June 7, 2005.
337–TA–276	4,392,476	December 23, 2000.
337–TA–287	4,376,966	April 7, 2000.
337–TA–308	4,653,455	June 19, 2005.
337–TA–314	4,558,263	December 6, 2003.
337–TA–314	4,709,958	September 22, 2006.
337–TA–319	4,177,931	October 4, 1998.
337–TA–319	4,676,390	July 22, 2006.
337–TA–319	4,765,505	June 22, 2006.
337–TA–320	4,559,872	April 30, 2004.
337–TA–324	4,740,213	October 22, 2006.
337–TA–333	4,805,505	March 2, 2008.
337–TA–337	4,446,436	May 18, 2001.
337–TA–344	4,336,652	August 1, 2000.
337–TA–365	4,950,107	October 12, 2008.

FOR FURTHER INFORMATION CONTACT: Mark D. Kelly, Esq., Office of the General Counsel, U.S. International Trade Commission, telephone 202–205–3106.

SUPPLEMENTARY INFORMATION: Patent-based exclusion orders in Commission investigations instituted under section 337 of the Tariff Act of 1930, as amended (19 U.S.C. 1337, *et. seq.*) remain in force until the expiration dates of the underlying United States patents. Prior to the enactment of the URAA, the term of a United States utility patent was 17 years, measured from the date the patent was issued by the U.S. Patent and Trademark Office.

Section 532(a) of the URAA (35 U.S.C. 154(a)(2) and (c)(1)) provides that all utility patents in force on, or resulting from applications filed before, June 8, 1995, will have a term that is the greater of 17 years from the date of issue or 20 years from the date the application for patent was first filed. Accordingly, the terms of the exclusion orders issued in connection with the above listed investigations have been extended to the dates listed above in conformity with section 532(a) of the URAA. For further information, *see Certain Microsphere Adhesives Process for Making Same, and Products Containing Same, Including Self-Stick Repositionable Notes,* USITC Inv. No. 337–TA–366, Commission Opinion (Public Version) at 24 (December 15, 1995). Hearing-impaired persons are advised that information on the matter can be obtained by contacting the Commission's TDD terminal on 202–205–1810.

Issued: February 9, 1996.

By order of the Commission.

Donna R. Koehnke,

Secretary.

[FR Doc. 96–3292 Filed 2–13–96; 8:45 am]

BILLING CODE 7020–02–P

[Investigations Nos. 731–TA–726, 727, and 729 (Final)]

Polyvinyl Alcohol From China, Japan, and Taiwan

AGENCY: International Trade Commission.

ACTION: Revised schedule for the subject investigations.

EFFECTIVE DATE: February 6, 1996.

FOR FURTHER INFORMATION CONTACT: Mary Messer (202–205–3193), Office of Investigations, U.S. International Trade Commission, 500 E Street SW., Washington, DC 20436. Hearing-impaired persons can obtain information on this matter by contacting the Commission's TDD terminal on 202–205–1810. Persons with mobility impairments who will need special assistance in gaining access to the Commission should contact the Office of the Secretary at 202–205–2000. General information concerning the Commission may also be obtained by accessing its internet server (http://www.usitc.gov or ftp://ftp.usitc.gov).

SUPPLEMENTARY INFORMATION: On October 5, 1995, the Commission instituted the subject investigations and established a schedule for their conduct (60 FR 56614, November 9, 1995). Subsequently, the Department of Commerce extended the date for its final determinations in the investigations from February 22, 1996, to March 21, 1996. The Commission, therefore, is revising its schedule in the investigations to conform with Commerce's new schedule.

The Commission's new schedule for the investigations is as follows: requests to appear at the hearing must be filed with the Secretary to the Commission not later than March 19, 1996; the prehearing conference will be held at the U.S. International Trade Commission Building at 9:30 a.m. on March 21, 1996; the prehearing staff report will be placed in the nonpublic record on March 13, 1996; the deadline for filing prehearing briefs is March 20, 1996; the hearing will be held at the U.S. International Trade Commission Building at 9:30 a.m. on March 26, 1996; the deadline for filing posthearing briefs is April 1, 1996; the Commission will make its final release of information on April 18, 1996; and final party comments are due on April 24, 1996.

For further information concerning these investigations see the Commission's notice of investigation cited above and the Commission's Rules of Practice and Procedure, part 201, subparts A through E (19 CFR part 201), and part 207, subparts A and C (19 CFR part 207).

Authority: These investigations are being conducted under authority of title VII of the Tariff Act of 1930; this notice is published pursuant to section 207.20 of the Commission's rules.

Issued: February 7, 1996.

By order of the Commission.

Donna R. Koehnke,

Secretary.

[FR Doc. 96–3293 Filed 2–13–96; 8:45 am]

BILLING CODE 7020–02–P

DEPARTMENT OF JUSTICE

Foreign Claims Settlement Commission

Agency Information Collection Activities: Proposed Collection; Comment Request

ACTION: Notice of Information Collection Under Review; Registration of U.S. Nationals' Claims Against Iraq.

This proposed information collection is published to obtain comments from the public. Comments and suggestions are encouraged and will be accepted for sixty (60) days from the date of publication of this notice.

Comments should address one or more of the following four points:

1. Evaluate whether the proposed collection of information is necessary for the proper performance of the functions of the agency, including whether the information will have practical utility;

2. Evaluate the accuracy of the Foreign Claims Settlement Commission's (FCSC's) estimate of the burden of the proposed collection of information, including the validity of the methodology and assumptions used;

3. Suggest ways in which the quality, utility and clarity of information proposed to be collected might be enhanced; and

4. Suggest ways in which the FCSC could minimize the burden of the proposed collection of information on those who are to respond, including use of appropriate automated, electronic, mechanical or other collection techniques or other forms of information technology, such as permitting electronic submission of responses.

A complete copy of this notice is available in the following alternative format: electronic file on computer diskette.

Please address comments, suggestions and requests for additional information to: Mr. David E. Bradley, Chief Counsel, Foreign Claims Settlement Commission of the United States, 600 E St., NW, Room 6002, Washington, DC 20579. Tel. 202–616–6975, FAX 202–616–6993.

SUPPLEMENTARY INFORMATION: This proposed collection of information will enable the FCSC to assess the number and magnitude of potential claims by U.S. nationals (individuals, corporations, and other entities) against the Government of Iraq which are outside the jurisdiction of the United Nations Compensation Commission in Geneva, Switzerland, for breach of contract, damage to and loss of property, physical injury and illness, and other losses and damages related to Iraq's August 1990 invasion and subsequent occupation of Kuwait.

Overview of This Proposed Information Collection

1. Type of information collection: New Collection.

2. Title of the form/collection: *Registration Form: Claims Against Iraq.*

3. Agency Form number, and name of component of the Department of Justice sponsoring the collection: FCSC Form 1–96; Foreign Claims Settlement Commission of the United States, United States Department of Justice.

4. Affected public who will be asked to respond, as well as a brief abstract: Primary Individuals; businesses and other for-profit entities; not-for-profit institutions. Other: none.

The information collected will be used to compile an accurate and comprehensive Registry of claimants and claims against Iraq, in preparation for the adjudication of those claims upon enactment of authorizing legislation. If such legislation is not passed, the information collected will be used to assure that all claims are taken into account in connection with any claims settlement negotiations that may be held with a future government of Iraq.

5. Estimate of the total number of respondents and the amount of time estimated for an average respondent to respond: 3,000 responses at an average of 1 hour per response.

6. Estimate of the total public burden (in hours) associated with the collection: 3,000 annual burden hours at $10 per hour for a total burden cost of $30,000.

If additional information is required concerning this overview, please contact: Mr. Robert B. Briggs, Clearance Officer, United States Department of Justice, Information Management and Security Staff, Justice Management Division, Suite 850, Washington Center Building, 1001 G St., NW, Washington, DC 20530.

Dated: February 8, 1996.

Robert B. Briggs,

Department Clearance Officer, Department of Justice.

[FR Doc. 96–3242 Filed 2–13–96; 8:45 am]

BILLING CODE 4410–01–M

Notice of Lodging of Consent Decree Pursuant to the Comprehensive Environmental Response, Compensation, and Liability Act

Notice is hereby given that on January 23, 1996, a proposed consent decree was lodged with the United States District Court for the District of Colorado in *United States* v. *Interstate Distribution Center Associates, Ltd., et al.,* CA No. 96–M–136. The proposed consent decree settles claims asserted by the United States, at the request of the United States Environmental Protection Agency (EPA) and the United States Department of the Army, and by the State of Colorado for releases and threatened releases of hazardous substances at the Chemical Sales Superfund Site near Denver, Colorado. The persons and entities named as defendants are Interstate Distribution Center Associates, Ltd., Crow Watson #9, Ltd., J. McDonald Williams, Trammell Crow Foundation, Ltd., TCF, Inc., Crow Family 1991 Limited Partnership, Mill Spring Holdings, Inc., Robert Watson, Norman Bledsoe, Gary D. Shafer, and Joel C. Peterson.

In the complaint, the United States and State asserted claims pursuant to Section 107(a) of the Comprehensive Environmental Response, Compensation, and Liability Act (CERCLA), as amended, 42 U.S.C. § 9607(a), for recovery of costs that have been and will be incurred in response to releases and threatened releases of hazardous substances at the Chemical Sales Superfund Site near Denver, Colorado. The consent decree includes a covenant not to sue, subject to certain reservations, under Sections 106 and 107(a) of CERCLA, 42 U.S.C. § 9606 and 9607(a), and the Solid Waste Disposal Act, 42 U.S.C. § 6901, *et seq.,* as amended by the Resource Conservation and Recovery Act of 1980 and the Hazardous and Solid Waste Amendments of 1984, for performance of the remedial actions and for recovery of past and future Response Costs incurred by the United States in connection with the Chemical Sales Facility. Under the proposed Consent Decree, the Defendants have made the following commitments: (1) Pay a total of $1.5 million in three payments of $500,000, $750,000, and $250,000, commencing ten days after the decree is entered and continuing annually for two years; and (2) pay 50% of the proceeds from the sale of the IDCA property.

The Department of Justice will receive written comments relating to the proposed Consent Decree for thirty (30) days from the date of publication of this notice. Comments should be addressed to the Assistant Attorney General of the Environment and Natural Resources Division, U.S. Department of Justice, Washington, D.C. 20530, and should refer to *United States* v. *Interstate Distribution Center Associates, Ltd., et al.,* D.J. Ref. No. 90–11–2–748B. Commenters may request a public meeting in the affected area in accordance with Section 7003(d) of RCRA, 42 U.S.C. § 6973(d).

The proposed Consent Decree and exhibits may be examined at the following locations: The Region 8 Office of EPA, 999 18th Street, Suite 500, Denver, Colorado. The complete Administrative Record for the Chemical Sales Superfund Site may be reviewed at the same location.

A copy of the Consent Decree and exhibits (if requested) may be obtained in person or by mail from the Consent Decree Library, 1120 G Street, N.W., 4th Floor, Washington, D.C. 20005, (202) 624–0892. In requesting copies, please enclose a check in the amount of $10.00 (25 cents per page reproduction cost) payable to the ''Consent Decree Library.''

Joel Gross,

Chief, Environmental Enforcement Section, Environment and Natural Resources Division.

[FR Doc. 96–2662 Filed 2–13–96; 8:45 am]

BILLING CODE 4410–01–M

DEPARTMENT OF LABOR

Employment and Training Administration

[TA–W–30,216; TA–W–30,216A]

AEG Transportation Systems, A/K/A ABB Daimler-Benz Transportation (North America) Inc. Including Former Employees of ABB Traction; Pittsburgh, PA and Elmira, NY; Amended Certification Regarding Eligibility To Apply for Worker Adjustment Assistance

In accordance with Section 223 of the Trade Act of 1975 (19 USC 2273) the Department of Labor issued a Revised Determination on Reconsideration regarding eligibility to apply for worker adjustment assistance on February 2, 1995, applicable to all workers of AEG Transportation Systems, Pittsburgh, Pennsylvania. The notice was published in the Federal Register on February 14, 1995 (60 FR 8416).

At the request of the company, the Department reviewed the certification for workers of the subject firm. The company reports that on January 1, 1996, the subject firm name changed to ABB Daimler-Benz Transportation (North America) Inc. The name change occurred as a result of a joint venture combining the subject firm with ABB Traction location in Elmira, New York. Accordingly, the Department is amending the certification to reflect the subject firm's name change and include workers of ABB Traction engaged in employment related to the production of transit vehicle systems and related equipment.

The intent of the Department's certification is to include all workers of the subject firm who were already affected by increased imports.

The amended notice applicable to TA–W–30,216 is hereby issued as follows:

All workers of AEG Transportation Systems, a/k/a ABB Daimler-Benz Transportation (North America) Inc., including former employees of ABB Traction, Pittsburgh, Pennsylvania (TA–W–30,216), and Elmira, New York (TA–W–30,216A) who became totally or partially separated from employment on or after August 4, 1993 are eligible to apply for adjustment assistance under Section 223 of the Trade Act of 1974.

Signed at Washington, D.C. this 29th day of January 1996.

Russell T. Kile,

Acting Program Manager, Policy and Reemployment Services, Office of Trade Adjustment Assistance.

[FR Doc. 96–3246 Filed 2–13–96; 8:45 am]

BILLING CODE 4510–30–M

[TA–W–31,351, etc.]

Consolidated Natural Gas Transmission, Clarksburg, WV, et al.; Amended Certification Regarding Eligibility To Apply for Worker Adjustment Assistance

In the matter of: Operations in various Locations in the following States:

TA–W–31,351B	PENNSYLVANIA
TA–W–31,351C	NEW YORK
TA–W–31,351D	OHIO
TA–W–31,351E	VIRGINIA
TA–W–31,351F	TEXAS

In accordance with Section 223 of the Trade Act of 1974 (19 USC 2273) the Department of Labor issued a Certification of Eligibility to Apply for Worker Adjustment Assistance on September 26, 1995, applicable to all workers at Consolidated Natural Gas Transmission located in Clarksburg, West Virginia. The notice was published

in the Federal Register on October 5, 1995 (60 FR 52213).

At the request of the company, the Department reviewed the certification for workers of the subject firm. The workers are engaged in employment related to the production of natural gas. New information received from the company shows that worker separations have occurred at the subject firm operations in various locations in Pennsylvania, New York, Ohio, Virginia, and Texas. Based on these new findings, the Department is again amending the certification to cover workers of Consolidated Natural Gas Transmission in those states.

The intent of the Department's certification is to include all workers of the subject firm who were adversely affected by increased imports.

The amended notice applicable to TA–W–31,351 us hereby issued as follows:

''All workers of Consolidated Natural Gas Transmission, Clarksburg, West Virginia (TA–W–31,351), and the various operations located in the States of Pennsylvania (TA–W–31,351B), New York (TA–W–31,351C), Ohio (TA–W–31,351D), Virginia (TA–W–31,351E), and Texas (31,351F) who became totally or partially separated from employment on or after August 9, 1994 are eligible to apply for adjustment assistance under Section 223 of the Trade Act of 1974.''

Signed at Washington, DC, this 29th day of January 1996.

Russell T. Kile,

Acting Program Manager, Policy and Reemployment Services Office of Trade Adjustment Assistance.

[FR Doc. 96–3247 Filed 2–13–96; 8:45 am]

BILLING CODE 4510–30–M

[TA–W–31,407]

D & H Companies Odessa, TX; Notice of Termination of Certification

This notice terminates the Certification Regarding Eligibility to Apply For Worker Adjustment Assistance issued by the Department on September 22, 1995 for workers of D & H Companies located in Odessa, Texas. The notice was published in the Federal Register on October 5, 1995 (60 FR 52213).

The Department, on its own motion, reviewed the certification for workers of D & H Companies. Findings show that the petitioner was the self-employed owner and the only worker of the subject firm. The petitioner does not meet the definition of adversely affected worker engaged in adversely affected employment within the meaning of Section 247 the Trade Act of 1974.

Since there are no adversely affected workers of the subject firm, the continuation of the certification would serve no purpose and the certification has been terminated.

Signed at Washington, D.C., this 1st day of February 1996.

Russell T. Kile,

Acting Program Manager, Policy and Reemployment Services, Office of Trade Adjustment Assistance.

[FR Doc. 96–3245 Filed 2–13–96; 8:45 am]

BILLING CODE 4510–30–M

Investigations Regarding Certifications of Eligibility To Apply for Worker Adjustment Assistance

Petitions have been filed with the Secretary of Labor under Section 221 (a) of the Trade Act of 1974 (''the Act'') and are identified in the Appendix to this notice. Upon receipt of these petitions, the Program Manager of the Office of Trade Adjustment Assistance, Employment and Training Administration, has instituted investigations pursuant to Section 221 (a) of the Act.

The purpose of each of the investigations is to determine whether the workers are eligible to apply for adjustment assistance under Title II, Chapter 2, of the Act. The investigations will further relate, as appropriate, to the determination of the date on which total or partial separations began or threatened to begin and the subdivision of the firm involved.

The petitioners or any other persons showing a substantial interest in the subject matter of the investigations may request a public hearing, provided such request is filed in writing with the Program Manager, Office of Trade Adjustment Assistance, at the address shown below, not later than February 26, 1996.

Interested persons are invited to submit written comments regarding the subject matter of the investigations to the Program Manager, Office of Trade Adjustment Assistance, at the address shown below, not later than February 26, 1996.

The petitions filed in this case are available for inspection at the Office of the Program Manager, Office of Trade Adjustment Assistance, Employment and Training Administration, U.S. Department of Labor, 200 Constitution Avenue, NW., Washington, DC 20210.

Signed at Washington, DC this 29th day of January, 1996.

Russell Kile,

Acting Program Manager, Policy & Reemployment Services, Office of Trade Adjustment Assistance.

Appendix

PETITIONS INSTITUTED ON 01/29/96

TA–W	Subject Firm (Petitioners)	Location	Date of Petition	Product(s)
31,791	Gothels Park Cutting, Inc (Wkrs)	Linden, NJ	12/28/95	Ladies' Sportswear.
31,792	Masonite/Int'l Paper (Wkrs)	Pilot Rock, OR	12/02/95	Nard Board, Asphalt Board, Tatami Mats.
31,793	Pershield, Inc (Wkrs)	Campaign, TN	12/20/95	Outdoor Equipment.
31,794	SmithKline Beecham (Comp)	Clifton, NJ	12/20/95	Scott's Emulsion—Food Supplement.
31,795	Cutting Services (Wkrs)	El Paso, TX	12/12/95	Garments.
31,796	Magee Apparel Mfg Co (Wkrs)	Magee, MS	12/14/95	Men's, Women's & Children's Pants.
31,797	Magee Apparel Mfg (Wkrs)	Collins, MS	12/14/95	Men's Women's & Children's Pants.
31,798	Miller Brewing Co (UAW)	Milwaukee, WI	12/18/95	Beer.
31,799	Pabst Brewing Co (UAW)	Milwaukee, WI	12/18/95	Beer.
31,800	DSI, Inc (UNITE)	Freeport, NY	12/14/95	Plastic Cosmetic Containers.
31,801	Shore Reboul Packaging (UNITE)	Freeport, NY	12/14/95	Plastic Cosmetics Containers.
31,802	Kirshner Medical Corp (Wkrs)	Fairlawn, NJ	12/13/95	Othopedic Implants.
31,804	Brazier Forest Industries (Co.)	Seattle, WA	11/15/95	Softwood Lumber.
31,805	Northland, A Scott Fetzer (IBEW)	Watertown, NY	01/10/96	Fractional HP Electric Motors.
31,806	Tailor Tech (Wkrs)	Catawissa, PA	12/14/96	Children's & Ladies' Clothing.
31,807	The Apparel Group (Unite)	Louisville, KY	01/05/96	Dress Shirts.

PETITIONS INSTITUTED ON 01/29/96—Continued

TA–W	Subject Firm (Petitioners)	Location	Date of Petition	Product(s)
31,808	Decor Home Fashions (ILGWU)	Brooklyn, NY	12/14/95	Shower Curtains, Table Cloths, Napkins.
31,809	Eaton Corporation (Co. IAM)	Bowling Green, KY	12/13/95	Industrial Electrical Controls.
31,810	Final Finish, Inc. (Co.)	El Paso, TX	12/12/95	Wash, Press, Inspect Jeans.
31,811	Northeast Manufacturing (Co.)	Booneville, MS	12/18/95	Ladies' Garments, Men's Shirts.
31,812	States Nitewear, Inc. (Wkrs)	New Bedford, MA	12/15/95	Ladies' Sleepwear, Loungewear, Robes.
31,813	Siemens Engery (Co.)	El Paso, TX	12/15/95	Circuit Breakers.
31,814	Shorty's Electric Motor (Co.)	The Dalles, OR	12/20/95	Electric Motors.
31,815	American National Can (Wkrs)	St. Louis, MO	12/26/95	Food Cans.
31,816	American National Can (Wkrs)	Pevely, MO	12/26/95	Food Cans.
31,817	B.B. & H. Manufacturers (Comp)	Moselle, MS	12/19/95	Denim Blue Jeans.
31,818	Cytec Industries (Wkrs)	Marietta, OH	12/29/95	Chemicals.
31,819	Electro-Scan Inc. (Wkrs)	Garfield, NJ	01/03/96	Jigs, Fixtures, Electron Mounts.
31,820	Everest & Jennings (IAM)	Earth City, MO	01/03/96	Homecare, Wheelchairs.
31,821	Fantasia Accessories (Wkrs)	New York, NY	12/28/95	Hair Accessories.
31,822	Ingersoll Dresser Pump Co (Wkrs)	Phillipsburg, NJ	01/02/96	Pumps.
31,823	Jackson Mills, Inc. (Comp)	Wellford, SC	12/27/95	Support Office (Woven Greige Fabric).
31,824	Jackson Mills, Inc. (Comp)	Iva, SC	12/27/95	Woven Greige Fabric.
31,825	McCulloch Corp. (Comp)	Lake Havasu, AZ	01/04/96	Chain Saws.
31,826	Lantz Lenses, Inc. (Wkrs)	St. Cloud, MN	01/03/96	Optical Lenses.
31,827	Major League, Inc. (Comp)	Jasper, GA	12/27/95	Sportswear.
31,828	Wrangler (Comp)	Troy, TN	12/12/95	Denim Jeans.
31,829	Movie Star of Sumrall (Comp)	Sumrall, MS	12/19/95	Ladies' Lingerie.
31,830	Rhone-Poulenc (Comp)	Newark, NJ	12/01/95	Defoamer & Chemicals for Paint etc.
31,831	Silver Leaf Paper (IAM)	Columbus, OH	11/07/95	Specialty Coated MG Papers.
31,832	Spring Town/Spring City (Wkrs)	Cartersville, GA	12/13/95	Men's T-Shirts.
31,833	Young Stuff Apparel Group (Wkrs)	New York, NY	12/14/95	Ladies' Sportswear.
31,834	Windsurfing Hawaii (Comp)	Stevenson, WA	01/05/96	Windsurfing Equipment.
31,835	Energy Fuels Nuclear (Comp)	Denver, CO	01/12/96	Uranium Oxide.
31,836	Energy Fuels Nuclear (Comp)	Blanding, UT	01/12/96	Uranium Oxide.
31,837	Weatherford U.S.A. (Wkrs)	Wichita Falls, TX	06/21/95	Oilfield Services.

[FR Doc. 96–3250 Filed 2–13–96; 8:45 am]
BILLING CODE 4510–30–M

Investigations Regarding Certifications of Eligibility To Apply for Worker Adjustment Assistance

Petitions have been filed with the Secretary of Labor under Section 221 (a) of the Trade Act of 1974 (''the Act'') and are identified in the Appendix to this notice. Upon receipt of these petitions, the Program Manager of the Office of Trade Adjustment Assistance, Employment and Training Administration, has instituted investigations pursuant to Section 221 (a) of the Act.

The purpose of each of the investigations is to determine whether the workers are eligible to apply for adjustment assistance under Title II, Chapter 2, of the Act. The investigations will further relate, as appropriate, to the determination of the date on which total or partial separations began or threatened to begin and the subdivision of the firm involved.

The petitioners or any other persons showing a substantial interest in the subject matter of the investigations may request a public hearing, provided such request is filed in writing with the Program Manager, Office of Trade Adjustment Assistance, at the address show below, not later than February 26, 1996.

Interested persons are invited to submit written comments regarding the subject matter of the investigations to the Program Manager, Office of Trade Adjustment Assistance, at the address shown below, not later than February 26, 1996.

The petitions filed in this case are available for inspection at the Office of the Program Manager, Office of Trade Adjustment Assistance, Employment and Training Administration, U.S. Department of Labor, 200 Constitution Avenue, N.W., Washington, D.C. 20210.

Signed at Washington, D.C. this 22nd day of January, 1996.

Russell Kile,

Acting Program Manager, Policy & Reemployment Services Office of Trade Adjustment Assistance.

APPENDIX

PETITIONS INSTITUTED ON 01/22/96

TA–W	Subject Firm (Petitioners)	Location	Date of Petition	Product(s)
31,755	Marshall Electric Corp (Comp)	Rochester, IN	12/08/95	Output Transformers.
31,756	Farr Co (Wkrs)	West Hazleton, PA	11/29/95	Air Filters for Heat & Air Conditioning.
31,757	Envirosys (Wkrs)	Moorhead, MN	12/29/95	Paper Pulp Cartons & Trays.
31,758	Campbell Industries (Wkrs)	San Diego, CA	12/11/95	Ship Building.
31,759	Carr Leather Co., Inc (UFCW)	Lynn, MA	12/11/95	Cow Hides, Leather Sides, Split Hides.
31,760	Windsor Textile & Process (UNITE)	Newburgh, NY	12/19/95	Dye Fabrics.
31,761	Dawson Home Fashions (Wkrs)	Passaic, NJ	12/11/95	Shower Curtains.

PETITIONS INSTITUTED ON 01/22/96—Continued

TA–W	Subject Firm (Petitioners)	Location	Date of Petition	Product(s)
31,762	Rose Art Lamps Shade (Wkrs)	Bronx, NY	12/13/95	Lamps & Lamp Shades.
31,763	U.S. Enertek (Wkrs)	Farmington, NM	12/16/95	Oilfield Equipment.
31,764	Elf Atochem North America (Comp)	Rosiclare, IL	12/30/95	Calcium Fluroride.
31,765	EIS Brake Parts (Wkrs)	Rural Retreat, VA	12/07/95	Brake Shoes.
31,766	Rockwell Int'l (Wkrs)	El Paso, TX	12/21/95	Semiconductors.
31,767	PMI Food Equipment (Wkrs)	Troy, OH	12/18/95	Commercial Dishwashers.
31,768	Newell Window Furnishings (UPIU)	Ogdensburg, NY	12/04/95	Window Shades.
31,769	James River Corporation (AWPPW)	Portland, OR	12/20/95	Poly Coated Paper—Frozen Food Packaging.
31,770	Allied Signal Safety (Wkrs)	Maryville, TN	11/14/95	Automobile Airbags.
31,771	Buster Brown Apparel (Wkrs)	Lafayette, GA	12/29/95	Childrens Apparel.
31,772	Buster Brown Apparel (Co.)	Ider, AL	12/18/95	Childrens Apparel.
31,773	Buster Brown Apparel (Co.)	Marion, VA	12/18/95	Children's Apparel.
31,774	Delta Apparel (Co.)	Tellico Plains, TN	12/12/95	Knit T-Shirts.
31,775	Delta Apparel (Co.)	Sparta, GA	12/12/95	Knit T-Shirts.
31,776	Communications and Power (Co.)	San Carlos, CA	12/12/95	Power Grid Vacuum Tubes.
31,777	Communications and Power (Co.)	Salt Lake City, UT	12/12/95	Power Grid Vacuum Tubes.
31,778	F.G. Montabert (UTWA)	Midland Park, NJ	12/07/95	Woven Garment Labels.
31,779	Dayton Racquet Co., Inc (Wkrs)	Arcanum, OH	12/01/95	Steel Racquets.
31,780	Cray Research, Inc (Comp)	Eagan, MN	12/06/95	Super Computer Systems.
31,781	CRI Customer Service (Wkrs)	Chippewa Falls, WI	12/06/95	Administrative Off. & Support Personnel.
31,782	Synergy Services, Inc (Wkrs)	Greenville, SC	12/29/95	Denim Garments.
31,783	Farris Fashion (Comp)	Brinkley, AR	12/19/95	Men's Knit Shirts.
31,784	Farris Fashion (Comp)	Marianna, AR	12/19/95	Men's Flannel Shirts.
31,785	Farris Fashion (Comp)	Hazen, AR	12/19/95	Men's Flannel Shirts.
31,786	Lauderdale Mills (Comp)	Lauderdale, MS	12/12/95	Ladies' & Children's T-Shirts.
31,787	Lee Apparel Co. (UFCW)	Fayetteville, TN	12/01/95	Denim Jeans.
31,788	Martin Blouse, Inc. (UNITE)	Shenandoah, PA	12/20/95	Men's Shirts & Women's Clothing.
31,789	Karl J. Marx (Wkrs)	New York, NY	12/11/95	Men's, Ladies' & Children's Clothing.
31,790	H.H. Cutler Co (Comp)	Grand Rapids, MI	12/14/95	Adult T-Shirts.

[FR Doc. 96–3248 Filed 2–13–96; 8:45 am]

BILLING CODE 4510–30–M

Pension and Welfare Benefits Administration

Annual Reporting and Disclosure Requirements; Correction

AGENCY: Pension and Welfare Benefits Administration, Department of Labor.

ACTION: Correction.

SUMMARY: In notice document 96–2140 beginning on page 3735 in the issue of Thursday, February 1, 1996, make the following correction:

On page 3736 in the second column, persons interested in commenting on the collection of information were directed to send their comments to Office of Information and Regulatory Affairs, OMB, Room 10235, NEOB, Washington, D.C. 20503, Attn: Desk Officer for PWBA. This should be changed to read Gerald B. Lindrew, U.S. Department of Labor, PWBA/OPLA, Room N–5647, 200 Constitution Avenue, N.W., Washington, D.C. 20210. Furthermore, correcting the original notice, copies of the comments are not required to be filed with Mrs. Theresa O'Malley or with any other party.

As stated in the original notice, the comment period remains open for sixty days from the date of publication, February 1, 1996.

Signed at Washington, D.C. this 8th day of February, 1996.

Alan D. Lebowitz,

Deputy Assistant Secretary for Program Operations, Pension and Welfare Benefits Administration, U.S. Department of Labor.

[FR Doc. 96–3249 Filed 2–13–96; 8:45 am]

BILLING CODE 4510–29–M

NUCLEAR REGULATORY COMMISSION

[Docket Nos. 50–369 and 50–370]

Duke Power Company, McGuire Nuclear Station, Units 1 and 2; Environmental Assessment and Finding of No Significant Impact

The U.S. Nuclear Regulatory Commission (the Commission) is considering issuance of amendments to Facility Operating License Nos. NPF–9 and NPF–17, issued to Duke Power Company (the licensee), for operation of the McGuire Nuclear Station, located in Mecklenburg County, North Carolina.

Environmental Assessment

Identification of the Proposed Action

The proposed action would revise the current combined Technical Specifications for Unit 1 and Unit 2 by separating them into individual volumes for each unit.

The proposed action is in accordance with the licensee's application for amendments dated July 18, 1994, as supplemented by letter dated October 9, 1995.

The Need for the Proposed Action

The proposed action would facilitate Technical Specification changes when it was required to be done separately for each unit. This would especially be important when, for a period of time, Unit 1 will have different steam generators than Unit 2.

Environmental Impacts of the Proposed Action

The Commission has completed its evaluation of the proposed action and concludes that the changes proposed by the licensee are administrative in nature and have no nonradiological or radiological environmental significance.

The change will not increase the probability or consequences of accidents, no changes are being made in the types of any effluents that may be

released offsite, and there is no significant increase in the allowable individual or cumulative occupational radiation exposure. Accordingly, the Commission concludes that there are no significant radiological environmental impacts associated with the proposed action.

With regard to potential nonradiological impacts, the proposed action does involve features located entirely within the restricted area as defined in 10 CFR Part 20. It does not affect nonradiological plant effluents and has no other environmental impact. Accordingly, the Commission concludes that there are no significant nonradiological environmental impacts associated with the proposed action.

Alternatives to the Proposed Action

Since the Commission has concluded there is no measurable environmental impact associated with the proposed action, any alternatives with equal or greater environmental impact need not be evaluated. As an alternative to the proposed action, the staff considered denial of the proposed action. Denial of the application would result in no change in current environmental impacts. The environmental impacts of the proposed action and the alternative action are similar.

Alternative Use of Resources

This action does not involve the use of any resources not previously considered in the Final Environmental Statement for the McGuire Nuclear Station, Units 1 and 2.

Agencies and Persons Consulted:

In accordance with its stated policy, on January 4, 1996, the staff consulted with the North Carolina official, Mr. J. James of the Division of Radiation Protection, North Carolina Department of Environment, Health and Natural Resources, regarding the environmental impact of the proposed action. The State official had no comments.

Finding of no Significant Impact

Based upon the environmental assessment, the Commission concludes that the proposed action will not have a significant effect on the quality of the human environment. Accordingly, the Commission has determined not to prepare an environmental impact statement for the proposed action.

For further details with respect to the proposed action, see the licensee's letter dated July 18, 1994, as supplemented by letter dated October 9, 1995, which are available for public inspection at the Commission's Public Document Room, The Gelman Building, 2120 L Street, NW., Washington, DC, and at the local public document room located at the Atkins Library, University of North Carolina, Charlotte (UNCC Station), North Carolina.

Dated at Rockville, Maryland, this 7th day of February 1996.

For the Nuclear Regulatory Commission.

Eugene V. Imbro,

Acting Director, Project Directorate II–2, Division of Reactor Projects—I/II, Office of Nuclear Reactor Regulation.

[FR Doc. 96–3256 Filed 2–13–96; 8:45 am]

BILLING CODE 7590–01–P

Biweekly Notice Involving No Significant Hazards Considerations; Applications and Amendments to Facility Operating Licenses

I. Background

Pursuant to Public Law 97–415, the U.S. Nuclear Regulatory Commission (the Commission or NRC staff) is publishing this regular biweekly notice. Public Law 97–415 revised section 189 of the Atomic Energy Act of 1954, as amended (the Act), to require the Commission to publish notice of any amendments issued, or proposed to be issued, under a new provision of section 189 of the Act. This provision grants the Commission the authority to issue and make immediately effective any amendment to an operating license upon a determination by the Commission that such amendment involves no significant hazards consideration, notwithstanding the pendency before the Commission of a request for a hearing from any person.

This biweekly notice includes all notices of amendments issued, or proposed to be issued from January 22, 1996, through February 2, 1996. The last biweekly notice was published on January 31, 1996 (61 FR 3497).

Notice of Consideration of Issuance of Amendments To Facility Operating Licenses, Proposed No Significant Hazards Consideration Determination, and Opportunity for a Hearing

The Commission has made a proposed determination that the following amendment requests involve no significant hazards consideration. Under the Commission's regulations in 10 CFR 50.92, this means that operation of the facility in accordance with the proposed amendment would not (1) involve a significant increase in the probability or consequences of an accident previously evaluated; or (2) create the possibility of a new or different kind of accident from any accident previously evaluated; or (3) involve a significant reduction in a margin of safety. The basis for this proposed determination for each amendment request is shown below.

The Commission is seeking public comments on this proposed determination. Any comments received within 30 days after the date of publication of this notice will be considered in making any final determination.

Normally, the Commission will not issue the amendment until the expiration of the 30-day notice period. However, should circumstances change during the notice period such that failure to act in a timely way would result, for example, in derating or shutdown of the facility, the Commission may issue the license amendment before the expiration of the 30-day notice period, provided that its final determination is that the amendment involves no significant hazards consideration. The final determination will consider all public and State comments received before action is taken. Should the Commission take this action, it will publish in the Federal Register a notice of issuance and provide for opportunity for a hearing after issuance. The Commission expects that the need to take this action will occur very infrequently.

Written comments may be submitted by mail to the Rules Review and Directives Branch, Division of Freedom of Information and Publications Services, Office of Administration, U.S. Nuclear Regulatory Commission, Washington, DC 20555, and should cite the publication date and page number of this Federal Register notice. Written comments may also be delivered to Room 6D22, Two White Flint North, 11545 Rockville Pike, Rockville, Maryland from 7:30 a.m. to 4:15 p.m. Federal workdays. Copies of written comments received may be examined at the NRC Public Document Room, the Gelman Building, 2120 L Street, NW., Washington, DC. The filing of requests for a hearing and petitions for leave to intervene is discussed below.

By March 15, 1996, the licensee may file a request for a hearing with respect to issuance of the amendment to the subject facility operating license and any person whose interest may be affected by this proceeding and who wishes to participate as a party in the proceeding must file a written request for a hearing and a petition for leave to intervene. Requests for a hearing and a petition for leave to intervene shall be filed in accordance with the Commission's ''Rules of Practice for Domestic Licensing Proceedings'' in 10 CFR Part 2. Interested persons should consult a current copy of 10 CFR 2.714

which is available at the Commission's Public Document Room, the Gelman Building, 2120 L Street, NW., Washington, DC and at the local public document room for the particular facility involved. If a request for a hearing or petition for leave to intervene is filed by the above date, the Commission or an Atomic Safety and Licensing Board, designated by the Commission or by the Chairman of the Atomic Safety and Licensing Board Panel, will rule on the request and/or petition; and the Secretary or the designated Atomic Safety and Licensing Board will issue a notice of a hearing or an appropriate order.

As required by 10 CFR 2.714, a petition for leave to intervene shall set forth with particularity the interest of the petitioner in the proceeding, and how that interest may be affected by the results of the proceeding. The petition should specifically explain the reasons why intervention should be permitted with particular reference to the following factors: (1) the nature of the petitioner's right under the Act to be made a party to the proceeding; (2) the nature and extent of the petitioner's property, financial, or other interest in the proceeding; and (3) the possible effect of any order which may be entered in the proceeding on the petitioner's interest. The petition should also identify the specific aspect(s) of the subject matter of the proceeding as to which petitioner wishes to intervene. Any person who has filed a petition for leave to intervene or who has been admitted as a party may amend the petition without requesting leave of the Board up to 15 days prior to the first prehearing conference scheduled in the proceeding, but such an amended petition must satisfy the specificity requirements described above.

Not later than 15 days prior to the first prehearing conference scheduled in the proceeding, a petitioner shall file a supplement to the petition to intervene which must include a list of the contentions which are sought to be litigated in the matter. Each contention must consist of a specific statement of the issue of law or fact to be raised or controverted. In addition, the petitioner shall provide a brief explanation of the bases of the contention and a concise statement of the alleged facts or expert opinion which support the contention and on which the petitioner intends to rely in proving the contention at the hearing. The petitioner must also provide references to those specific sources and documents of which the petitioner is aware and on which the petitioner intends to rely to establish those facts or expert opinion. Petitioner must provide sufficient information to show that a genuine dispute exists with the applicant on a material issue of law or fact. Contentions shall be limited to matters within the scope of the amendment under consideration. The contention must be one which, if proven, would entitle the petitioner to relief. A petitioner who fails to file such a supplement which satisfies these requirements with respect to at least one contention will not be permitted to participate as a party.

Those permitted to intervene become parties to the proceeding, subject to any limitations in the order granting leave to intervene, and have the opportunity to participate fully in the conduct of the hearing, including the opportunity to present evidence and cross-examine witnesses.

If a hearing is requested, the Commission will make a final determination on the issue of no significant hazards consideration. The final determination will serve to decide when the hearing is held.

If the final determination is that the amendment request involves no significant hazards consideration, the Commission may issue the amendment and make it immediately effective, notwithstanding the request for a hearing. Any hearing held would take place after issuance of the amendment.

If the final determination is that the amendment request involves a significant hazards consideration, any hearing held would take place before the issuance of any amendment.

A request for a hearing or a petition for leave to intervene must be filed with the Secretary of the Commission, U.S. Nuclear Regulatory Commission, Washington, DC 20555, Attention: Docketing and Services Branch, or may be delivered to the Commission's Public Document Room, the Gelman Building, 2120 L Street, NW., Washington DC, by the above date. Where petitions are filed during the last 10 days of the notice period, it is requested that the petitioner promptly so inform the Commission by a toll-free telephone call to Western Union at 1-(800) 248–5100 (in Missouri 1-(800) 342–6700). The Western Union operator should be given Datagram Identification Number N1023 and the following message addressed to (Project Director): petitioner's name and telephone number, date petition was mailed, plant name, and publication date and page number of this Federal Register notice. A copy of the petition should also be sent to the Office of the General Counsel, U.S. Nuclear Regulatory Commission, Washington, DC 20555, and to the attorney for the licensee.

Nontimely filings of petitions for leave to intervene, amended petitions, supplemental petitions and/or requests for a hearing will not be entertained absent a determination by the Commission, the presiding officer or the Atomic Safety and Licensing Board that the petition and/or request should be granted based upon a balancing of factors specified in 10 CFR 2.714(a)(1)(i)–(v) and 2.714(d).

For further details with respect to this action, see the application for amendment which is available for public inspection at the Commission's Public Document Room, the Gelman Building, 2120 L Street, NW., Washington, DC, and at the local public document room for the particular facility involved.

Baltimore Gas and Electric Company, Docket Nos. 50–317 and 50–318, Calvert Cliffs Nuclear Power Plant, Unit Nos. 1 and 2, Calvert County, Maryland

Date of amendments request: January 16, 1996.

Description of amendments request: The proposed amendments would revise the Calvert Cliffs Nuclear Power Plant, Unit Nos. 1 and 2, Technical Specifications (TSs) to adopt Option B of 10 CFR Part 50, Appendix J, to require Type A containment leak rate tests to be performed on a performance-based testing schedule. Specifically, TSs 3/4.6.1.2 and 4.6.1.6.3 will be revised to reference a new Containment Leakage Rate Testing Program, TS 6.0 will be revised to add the new Containment Leakage Rate Testing Program, identify the programmatic controls for the new program, and reference the source of the programmatic guidelines, Regulatory Guide 1.116, ''Performance-Based Containment Leak-Test Programs,'' dated September 1995. The TS Bases will be revised to reflect these changes.

Basis for proposed no significant hazards consideration determination: As required by 10 CFR 50.91(a), the licensee has provided its analysis of the issue of no significant hazards consideration, which is presented below:

1. Would not involve a significant increase in the probability or consequences of an accident previously evaluated.

Containment leakage rate testing is performed in accordance with 10 CFR Part 50, Appendix J, ''Primary Reactor Containment Leakage Testing for Water-Cooled Power Reactors.'' The Appendix J containment leakage test requirements include performance of Type A tests, which measure the overall leakage rate of the containment, and Type B and C tests, which measure the leakage through containment penetrations and valves. The Commission has amended the regulations to provide a

performance-based alternative, Option B, to the existing Appendix J. At this time, Baltimore Gas and Electric Company plans to adopt Option B for Type A testing only.

Implementation of Option B involves no physical or operational changes to the plant structures, systems or components. Furthermore, leakage rate testing and containment surface visual inspections do not contribute to the initiation of any postulated accidents; therefore, this proposed change does not involve an increase in the probability of any previously evaluated accidents.

Type A testing is necessary to demonstrate that leakage through the containment is within the limits assumed in the accident analyses. The only potential effect of the proposed change to the Type A test frequency is the possibility that containment leakage would go undetected between tests. As described in NUREG–1493, passive failures resulting in containment leakage in excess of that assumed in the accident analyses are extremely unlikely to develop between Type A tests. Additionally, the Calvert Cliffs Individual Plant Examination considered the phenomenological effects associated with severe accidents which could lead to containment failure. It was concluded that adopting a performance-based testing interval will not significantly affect the containment failure probabilities calculated for the Individual Plant Examination. Furthermore, the required frequency for containment surface examinations to identify containment degradation precursors will be relocated from the Technical Specifications to the Containment Leakage Rate Testing Program, but will remain at three examinations every ten years as recommended by Regulatory Guide 1.163, September 1995. Altogether, adoption of a performance-based testing frequency, as specified in 10 CFR Part 50, Appendix J, Option B, will not significantly decrease the confidence in the leak-tightness of the containment. Therefore, this change will not result in a significant increase in the probability of undetected containment degradation or in the consequences of an accident previously evaluated.

Therefore, the proposed change does not involve a significant increase in the probability or consequences of an accident previously evaluated.

2. Would not create the possibility of a new or different type of accident from any accident previously evaluated.

The proposed Technical Specification change adopts a performance-based approach to containment leakage rate testing. This change does not add any new equipment, modify any interfaces with any existing equipment, or change the equipment's function, or the method of operating the equipment. The proposed change does not affect normal plant operations or configuration, nor does it affect leakage rate test methods. As the proposed change would not change the design, configuration or operation of the plant, it could not cause containment leakage rate testing to become an accident initiator.

Therefore, the proposed change does not create the possibility of a new or different type of accident from any accident previously evaluated.

3. Would not involve a significant reduction in a margin of safety.

The purpose of the existing schedule for Type A tests is to ensure that the release of radioactive material will be restricted to those leak paths and leakage rates assumed in the accident analyses. The margin of safety associated with containment leakage rate is not reduced if containment leakage does not exceed the maximum allowable leakage rate defined in the Technical Specifications. The proposed Technical Specification change implements a performance-based Type A testing option, but does not affect the maximum allowable containment leakage rate. The proposed change does not affect a safety limit, a Limiting Condition for Operation, or the way in which the plant is operated.

In NUREG–1493, the Commission included a sensitivity study to explore the risk affect of several alternate leakage rate testing schedules. This study concludes that decreasing the Type A testing frequency to one test per twenty years would ''lead to an imperceptible increase in risk.'' Additionally, it was determined that implementation of the performance-based testing option will not significantly affect the containment failure probability calculated in the Calvert Cliffs Individual Plant Examination. Based upon these studies, there is sufficient information to conclude that the risk increase, and that the probability of exceeding the maximum allowable containment leakage rate as a result of adopting Option B, is low.

Therefore, the proposed change does not involve a significant reduction in a margin of safety.

The NRC staff has reviewed the licensee's analysis and, based on this review, it appears that the three standards of 50.92(c) are satisfied. Therefore, the NRC staff proposes to determine that the amendments request involves no significant hazards consideration.

Local Public Document Room location: Calvert County Library, Prince Frederick, Maryland 20678.

Attorney for licensee: Jay E. Silbert, Esquire, Shaw, Pittman, Potts and Trowbridge, 2300 N Street, NW., Washington, DC 20037.

NRC Project Director: Ledyard B. Marsh.

Carolina Power & Light Company, Docket No. 50–261, H. B. Robinson Steam Electric Plant, Unit No. 2, Darlington County, South Carolina

Date of amendment request: November 27, 1995.

Description of amendment request: The proposed change would revise technical specification (TS) section 3.2 to remove requirements for the chemical and volume control system (CVCS). The CVCS requirements would be relocated to a licensee-controlled document and controlled by the 10 CFR 50.59 evaluation process.

Basis for proposed no significant hazards consideration determination: As required by 10 CFR 50.91(a), the licensee has provided its analysis of the issue of no significant hazards consideration, which is presented below:

1. The proposed change does not involve a significant increase in the probability or consequences of an accident previously evaluated.

The proposed change removes the Chemical and Volume Control System (CVCS) requirements from the Technical Specifications (TS) and relocates these requirement[s] to a licensee-controlled document. As such, the proposed change only affects plant documentation and does not change the operating requirements or the plant physical or operating configuration. The CVCS requirements will be controlled by the plant approved process for the licensee-controlled document using the 10 CFR 50.59 evaluation process. The proposed change relocating the CVCS requirements from the TS to licensee control will not affect the probability of an accident previously evaluated because the operating restrictions will remain in effect and any change to the operating restrictions will be performed in accordance with 10 CFR 50.59.

Examination of the H. B. Robinson Steam Electric Plant, Unit No. 2 Updated Final Safety Analysis Report (UFSAR) Chapter 15, Accident Analysis, finds that no CVCS structure, system, or component functions or actuates to mitigate a design basis accident or transient. Valves at the CVCS to Reactor Coolant System (RCS) interface perform a containment isolation function. However, the TS Section 3.2 does not address the containment isolation aspect of the CVCS. As such, the proposed change to remove the CVCS requirements from the TS will not affect the consequences of an accident previously evaluated.

2. The proposed change does not create the possibility of a new or different kind of accident from any accident previously evaluated.

The proposed change removes the CVCS requirements from the TS and relocates the requirements to a licensee-controlled document. As such, the proposed change only affects plant documentation and does not change the operating requirements or the plant physical or operating configuration. The CVCS requirements will be controlled by the plant approved process for the licensee-controlled document using the 10 CFR 50.59 evaluation process. The proposed change will not create the possibility of a new or different kind of accident from any accident previously evaluated because any future change to these operating restrictions will be performed in accordance with 10 CFR 50.59.

3. The proposed change does not involve a significant reduction in the margin of safety.

The proposed change removes the CVCS requirements from the TS based on the criteria of 10 CFR 50.36(c)(2)(ii). The CVCS requirements will be relocated to a licensee-

controlled document. As such, the proposed change only affects plant documentation and does not change operating requirements or the plant physical or operating configuration. The CVCS requirements will be controlled by the plant approved process for the licensee-controlled document using the 10 CFR 50.59 evaluation process. The proposed change will not result in any reduction in the margin of safety because any future change to the CVCS operating restrictions will be performed in accordance with 10 CFR 50.59. Therefore, the proposed change does not involve a significant reduction in a margin of safety.

The NRC staff has reviewed the licensee's analysis and, based on this review, it appears that the three standards of 10 CFR 50.92(c) are satisfied. Therefore, the NRC staff proposes to determine that the amendment request involves no significant hazards consideration.

Local Public Document Room location: Hartsville Memorial Library, 147 West College Avenue, Hartsville, South Carolina 29550.

Attorney for licensee: R. E. Jones, General Counsel, Carolina Power & Light Company, Post Office Box 1551, Raleigh, North Carolina 27602.

NRC Project Director: David B. Matthews.

Carolina Power & Light Company, Docket No. 50–261, H. B. Robinson Steam Electric Plant, Unit No. 2, Darlington County, South Carolina

Date of amendment request: December 10, 1995.

Description of amendment request: The proposed change would revise technical specification (TS) section 3.5.1 and Tables 3.5–2, 3, and 4 concerning the reactor trip system (RTS), engineered safety feature actuation system (ESFAS), and isolation function. TS would be revised to (1) specify actions to be taken when an instrument channel becomes inoperable, (2) add an ''Applicable Conditions'' column that defines the applicability and/or mode of operation of each functional unit, and (3) make editorial enhancements.

Basis for proposed no significant hazards consideration determination: As required by 10 CFR 50.91(a), the licensee has provided its analysis of the issue of no significant hazards consideration, which is presented below:

1. The proposed change does not involve a significant increase in the probability or consequences of an accident previously evaluated.

The proposed change to upgrade the RTS and ESFAS TS to more closely agree with Westinghouse Standard TS (i.e., NUREG–0452) will not result in any hardware changes. The RTS and ESFAS are not assumed to be initiators of analyzed events.

The role of these systems is in mitigating and thereby limiting the consequences of accidents. The proposed changes will ensure the RTS and ESFAS remain capable of mitigating design basis events as described in the Updated Final Safety Analysis Report (UFSAR) and that the results of the analyses in the UFSAR remain bounding. Additionally, the proposed changes do not impose any new safety analyses limits or alter the plant's ability to detect and mitigate events. Therefore, this change does not involve a significant increase in the probability or consequences of an accident previously evaluated.

2. The proposed change does not create the possibility of a new or different kind of accident from any accident previously evaluated.

The proposed change to upgrade the RTS and ESFAS TS to more closely agree with Westinghouse Standard TS (i.e., NUREG–0452) does not necessitate a physical alteration of the plant (i.e., no new or different type of equipment will be installed) or changes in parameters governing normal plant operation. Thus, the proposed change does not create the possibility of a new or different kind of accident from any accident previously evaluated.

3. The proposed change does not involve a significant reduction in the margin of safety.

The proposed change, which upgrades the RTS and ESFAS TS to be consistent with Westinghouse Standard TS (i.e., NUREG–0452) does not involve a significant reduction in a margin of safety. The proposed change has been developed to ensure the analyzed safety limits are not exceeded and ensures the RTS and ESFAS are available when necessary to mitigate the consequences of accidents. It also imposes additional requirements to ensure the RTS and ESFAS remain capable of mitigating the consequences of design basis accidents as described in the UFSAR accident analyses. In addition, this change provides a benefit of avoiding unnecessary plant transients when adequate compensatory measures are available to ensure the intended function of the instrumentation is satisfied.

The NRC staff has reviewed the licensee's analysis and, based on this review, it appears that the three standards of 10 CFR 50.92(c) are satisfied. Therefore, the NRC staff proposes to determine that the amendment request involves no significant hazards consideration.

Local Public Document Room location: Hartsville Memorial Library, 147 West College Avenue, Hartsville, South Carolina 29550.

Attorney for licensee: R. E. Jones, General Counsel, Carolina Power & Light Company, Post Office Box 1551, Raleigh, North Carolina 27602.

NRC Project Director: David B. Matthews.

Connecticut Yankee Atomic Power Company, Docket No. 50–213, Haddam Neck Plant, Middlesex County, Connecticut, and Northeast Nuclear Energy Company, et al., Docket Nos. 50–245, 50–336, and 50–423, Millstone Nuclear Power Station, Unit Nos. 1, 2, and 3, New London County, Connecticut

Date of amendment request: November 22, 1995.

Description of amendment request: The amendments would revise the Technical Specifications (TS) for Haddam Neck and Millstone Unit Nos. 1, 2, and 3 to be consistent with the guidance of Generic Letter 93–07. The proposed changes will remove review of the emergency and security plans from the TS list of responsibilities of the Plant Operations Review Committee (PORC)/Site Operations Review Committee (SORC), and will also remove the requirement for PORC/SORC to review procedures and procedure changes necessary for the implementation of the emergency and security plans.

Basis for proposed no significant hazards consideration determination: As required by 10 CFR 50.91(a), the licensee has provided its analysis of the issue of no significant hazards consideration, which is presented below:

* * * The proposed changes do not involve an SHC [significant hazards consideration] because the changes would not:

1. Involve a significant increase in the probability or consequences of an accident previously evaluated.

The proposed changes delete the technical specification requirement to review the emergency plans, security plans, and their implementing procedures by PORC/SORC. The requirement which mandates PORC/SORC review will be maintained in the respective emergency plan and security plan. These changes are purely administrative in nature. These changes do not affect the configuration, operation, or performance of any system, structure, or component. The proposed changes are therefore not relevant to the probability of initiation of any accident previously evaluated, and they are not related to the prevention or mitigation of any accident previously evaluated. Thus they do not increase the consequences of any design basis accident.

Therefore, these proposed changes to the Technical Specifications do not involve a significant increase in the probability or consequences of an accident previously evaluated.

2. Create the possibility of a new or different kind of accident from any accident previously evaluated.

The proposed changes delete from the technical specifications the line item requiring the review of emergency plans, security plans, and their implementing

procedures by PORC/SORC. Revisions to these plans will continue to be reviewed by PORC/SORC due to commitments to contain the requirement for PORC/SORC review in the emergency plan and security plan. These changes are purely administrative in nature.

None of the proposed changes described above alter the configuration, normal operation, design bases, function, or performance of any components or systems. Thus, the proposed administrative changes do not create the possibility of a new or different kind of accident from any previously evaluated since these changes do not introduce any new or different equipment, operating mode, or design basis functions for the existing licensed structures, systems and components. Thus, the proposed changes do not create the possibility of a new or different kind of accident from any previously evaluated.

3. Involve a significant reduction in a margin of safety.

None of the above proposed changes alter the configuration, normal operation, design bases, function, or performance of any components or systems. Therefore, the proposed changes do not affect the margin of safety inherent in the design, analysis, function, or operation of the relevant structures, systems or components.

These proposed changes do not alter the fuel clad barrier, fuel integrity, reactor coolant system integrity or the containment boundary integrity; thus no margin of safety related to these barriers is involved.

None of the proposed administrative changes described above alter the configuration, normal operation, design bases, function or performance of any components, systems, or barriers to a radiological release. Thus, the proposed administrative changes do not affect the margin of safety inherent in the design, analysis, function, or operation of the relevant structures, systems or components.

Based on the above, these proposed changes do not involve a significant reduction in a margin of safety.

The NRC staff has reviewed the licensee's analysis and, based on this review, it appears that the three standards of 10 CFR 50.92(c) are satisfied. Therefore, the NRC staff proposes to determine that the amendment request involves no significant hazards consideration.

Local Public Document Room location: Russell Library, 123 Broad Street, Middletown, CT 06457 for the Haddam Neck Plant, and Learning Resources Center, Three Rivers Community-Technical College, 574 New London Turnpike, Norwich, CT 06360 for Millstone Units 1, 2, and 3.

Attorney for licensee: Lillian M. Cuoco, Esq., Senior Nuclear Counsel, Northeast Utilities Service Company, P.O. Box 270, Hartford, CT 06141–0270.

NRC Project Director: Phillip F. McKee.

Duke Power Company, et al., Docket Nos. 50–413 and 50–414, Catawba Nuclear Station, Units 1 and 2, York County, South Carolina

Date of amendment request: January 11, 1996.

Description of amendment request: The Catawba Unit 1 and the Catawba Unit 2 containment process penetration M308 and associated containment isolation valves are currently not in service and serve no function other than providing containment integrity. The licensee plans to implement modifications for both units to remove containment isolation valves RN–429A and RN–432B of penetration M308, remove associated wiring and control room instrumentation, and cut and cap tubing providing containment valve injection water to these containment isolation valves during the forthcoming Unit 1 refueling outage, currently scheduled to begin by June 1996, and the Unit 2 refueling outage currently scheduled to begin in March 1997. The proposed Technical Specifications (TS) would be revised to delete these containment isolation valves and associated equipment to permit implementation of these modifications. The licensee's requested amendment removes process penetration M308 from TS Table 3.6–1 and removes containment isolation valves RN–429A and RN–432B from TS Table 3.6–2a and Table 3.6–2b due to planned modifications which physically remove these valves from process penetration M308.

Basis for proposed no significant hazards consideration determination: As required by 10 CFR 50.91(a), the licensee has provided its analysis of the issue of no significant hazards consideration, which is presented below:

Criterion 1

The physical removal of containment isolation valves RN–432B and RN–429A, associated control room instrumentation, containment valve injection water connections to these valves and the subsequent sealing of process penetration M308 will decrease unnecessary challenges to containment isolation, containment valve injection water leak-rate testing and the condition of control room instrumentation, as opposed to the current configuration.

Since the sealing of process penetration M308 will be performed per the requirements of the applicable ASME code piping safety class requirements, the confidence in the pressure boundary will be equivalent to the component as originally designed. Therefore, this Technical Specification amendment to remove process penetration M308 from Technical Specification Table[] 3.6–1 and to remove containment isolation valves RN–429A and 432B from Technical Specification Table 3.6–2a and Table 3.6–2b will not increase the probability or consequences of an accident that has been previously evaluated.

Criterion 2

Since no new failure modes are created, on the basis that the penetration is equivalent in confidence to the original design, and the plant will operate the same way it does now, this Technical Specification amendment to remove process penetration M308 from Technical Specification Table[] 3.6–1 and to remove containment isolation valves RN–429A and 432B from Technical Specification Table 3.6–2a and Table 3.6–2b does not create the possibility of a new or different kind of accident from any accident previously evaluated.

Criterion 3

This proposed change to Technical Specifications will not cause a significant reduction in the margin of safety. Upon completion of the removal of containment isolation valves RN–432B and 429A and the subsequent sealing of process penetration M308, the penetration will be Type B leak rate tested as part of post-modification testing, and will be retested periodically and following each use of the penetration for temporary containment cooling purposes during refueling outages. Therefore, the fuel, cladding, reactor coolant pressure boundary, and containment are not negatively affected by the proposed Technical Specification amendment. No assumptions made in any accident analysis are compromised by this proposed Technical Specification amendment.

The NRC staff has reviewed the licensee's analysis and, based on this review, it appears that the three standards of 10 CFR 50.92(c) are satisfied. Therefore, the NRC staff proposes to determine that the amendment request involves no significant hazards consideration.

Local Public Document Room location: York County Library, 138 East Black Street, Rock Hill, South Carolina 29730.

Attorney for licensee: Mr. Albert Carr, Duke Power Company, 422 South Church Street, Charlotte, North Carolina 28242.

NRC Project Director: Herbert N. Berkow.

Florida Power and Light Company, et al., Docket Nos. 50–335 and 50–389, St. Lucie Plant, Unit Nos. 1 and 2, St. Lucie County, Florida

Date of amendment request: January 4, 1996.

Description of amendment request: The proposed revisions rectify a discrepancy in Specification 3.5.3 for each St. Lucie unit, and provide assurance that administrative controls for High Pressure Safety Injection pumps remain effective in the lower operational modes.

Basis for proposed no significant hazards consideration determination: As required by 10 CFR 50.91(a), the licensee has provided its analysis of the issue of no significant hazards consideration, which is presented below:

(1) Operation of the facility in accordance with the proposed amendment would not involve a significant increase in the probability or consequences of an accident previously evaluated.

The amendment proposed for each St. Lucie Unit (1 and 2) rectifies an error in the Applicability statement for Technical Specification 3.5.3, which provides limiting conditions for operation (LCO) for the Emergency Core Cooling System (ECCS) subsystems during plant shutdown. The revision is administrative in nature and does not change the technical requirements within the LCO that are established to assure a minimum functional capability required of the ECCS systems to mitigate analyzed transients. Rather, the revision provides assurance that the effectiveness of certain administrative controls, established to restrict the number of operable HPSI [High Pressure Safety Injection] pumps during shutdown, will not be diminished by a misinterpretation of the modes and conditions for which the LCO must apply.

This proposal does not create any accident initiators, nor does it change the availability or method of operation of equipment that is assumed to function in the success path(s) for mitigating accidents evaluated in the plant safety analyses. Therefore, operation of either facility in accordance with its proposed amendment would not involve a significant increase in the probability or consequences of an accident previously evaluated.

(2) Operation of the facility in accordance with the proposed amendment would not create the possibility of a new or different kind of accident from any accident previously evaluated.

The proposed administrative change to the LCO 3.5.3 Applicability statement for each St. Lucie unit will not change the physical plant or the modes of plant operation defined in the Facility License. The revision does not involve the addition or modification of equipment, nor does it alter the design or operation of plant systems. Therefore, operation of either facility in accordance with its proposed amendment would not create the possibility of a new or different kind of accident from any accident previously evaluated.

(3) Operation of the facility in accordance with the proposed amendment would not involve a significant reduction in a margin of safety.

The proposed amendment involves an administrative change to LCO 3.5.3 for each St. Lucie unit, which applies to the ECCS subsystems during the plant shutdown modes. The revision rectifies a discrepancy in the Applicability statement, and thereby provides assurance that the effectiveness of administrative controls established within the LCO to limit the number of operable High Pressure Safety Injection pumps during the shutdown modes will not be diminished. The changes do not alter the basis for any technical specification that is related to the establishment of, or the maintenance of, a nuclear safety margin. Therefore, operation of either facility in accordance with its proposed amendment would not involve a significant reduction in a margin of safety.

The NRC staff has reviewed the licensee's analysis and, based on this review, it appears that the three standards of 50.92(c) are satisfied. Therefore, the NRC staff proposes to determine that the amendment request involves no significant hazards consideration.

Local Public Document Room location: Indian River Junior College Library, 3209 Virginia Avenue, Fort Pierce, Florida 34954–9003.

Attorney for licensee: Harold F. Reis, Esquire, Newman and Holtzinger, 1615 L Street, NW., Washington, DC 20036.

NRC Project Director: David B. Matthews.

IES Utilities Inc., Docket No. 50–331, Duane Arnold Energy Center, Linn County, Iowa

Date of amendment request: January 18, 1996.

Description of amendment request: The proposed amendment would lower the Reactor Water Cleanup (RWCU) isolation setpoint from reactor low level to reactor low-low level.

Basis for proposed no significant hazards consideration determination: As required by 10 CFR 50.91(a), the licensee has provided its analysis of the issue of no significant hazards consideration, which is presented below:

(1) The proposed [technical specification] TS amendment will not significantly increase the probability or consequences of any previously evaluated accidents. The RWCU vessel level isolation occurs as a result of a [loss-of-coolant-accident] LOCA and therefore does not affect the probability of occurrence of a LOCA or any other previously evaluated accident.

An IES calculation demonstrates that for all RWCU breaks or cracks considered, high ambient temperature, high differential temperature and/or high differential flow will provide the RWCU isolation signal prior to reaching reactor low level. Therefore, the level setpoint acts as a backup isolation signal for a break in RWCU piping outside primary containment.

As discussed, this change will utilize four existing reactor level sensors. These reactor level sensors are safety related and located in the same physical area and in the same configuration as the four existing sensors. Therefore, the reliability of the RWCU vessel level isolation capability is not reduced.

(2) The proposed changes will not create the possibility of a new or different kind of accident. The configuration of the RWCU isolation valves is unchanged. As before, the failure of any single active component in the new logic results in, at worst, failure of one containment isolation valve to close. Because the closure of one of the two valves is sufficient to achieve the containment isolation, the possibility of an accident of a different type is not increased.

The modification to the RWCU vessel level isolation logic has been designed to the same standards as the original logic. This change will require the same surveillance requirements for the reactor low-low level trip point circuitry that are currently required for the reactor low level trip point circuitry. All other RWCU isolation functions remain unchanged. Consequently, no new accidents are postulated as a result of this proposed change.

(3) The proposed change will not result in a significant reduction in any margin of safety. No margin of safety is affected by this change. The RWCU vessel level isolation occurs to establish primary containment and limit fluid loss. The proposed change will preserve these functions.

It can be noted, however, that for a RWCU piping break outside primary containment, high ambient temperature, high differential temperature and/or high differential flow will provide the RWCU isolation signal. In the unlikely event that these temperature and flow sensing devices fail, isolation will be initiated upon reactor level reaching 119.5″ above [top of active fuel] TAF. Using blowdown rates and valve closure times, analysis shows reactor level will not drop below 105″ above TAF. The is well above the TAF. Additionally, lowering the RWCU isolation setpoint does not increase the consequences of a LOCA.

The NRC staff has reviewed the licensee's analysis and, based on this review, it appears that the three standards of 10 CFR 50.92(c) are satisfied. Therefore, the NRC staff proposes to determine that the amendment request involves no significant hazards consideration.

Local Public Document Room location: Cedar Rapids Public Library, 500 First Street, S.E., Cedar Rapids, Iowa 52401.

Attorney for licensee: Jack Newman, Kathleen H. Shea, Morgan, Lewis, & Bockius, 1800 M Street, NW., Washington, DC 20036–5869.

NRC Project Director: Gail H. Marcus.

IES Utilities Inc., Docket No. 50–331, Duane Arnold Energy Center, Linn County, Iowa

Date of amendment request: January 30, 1996.

Description of amendment request: The proposed amendment would revise certain control rod scram insertion time testing limits. The proposed change is compatible with the limits specified in the Improved Standard Technical Specifications (ITS), NUREG 1433, Revision 1, ''Standard Technical Specifications, General Electric Plants, BWR/4.''

Basis for proposed no significant hazards consideration determination: As required by 10 CFR 50.91(a), the licensee has provided its analysis of the issue of no significant hazards consideration, which is presented below:

(1) The proposed amendment does not involve a change in the probability or consequences of an accident previously evaluated. The amount of reactivity inserted at rod position 46 (approximately 5% of rod insertion) is small and the time required to insert this amount of reactivity is not explicitly considered in the plant transient analysis. A generic BWR/2–5 study (Reference 3 [EAS–56–0889, ''BWR/2–5 Scram Time Technical Specification'', dated August 1989]) performed on behalf of the [boiling water reactor] BWR Owner's Group to support the ITS demonstrated that relaxing the 5% rod insertion time requirement had a negligible impact on plant transient performance provided the insertion time requirements to the other rod positions are met. We have confirmed that this study is applicable to the [Duane Arnold Energy Center] DAEC. Increasing the allowable average scram insertion time to rod position 46 for all Operable control rods in addition to increasing the allowable average scram insertion time to rod position 46 for the three fastest control rods in any 2X2 array would still demonstrate that the [control rod drive] CRD system will perform its intended function. Scram time is a measure of CRD performance for operability. As such, it is not the initiator of any plant event. Therefore, the proposed change will not result in an increase in the probability of an accident occurring.

(2) The amount of reactivity inserted at rod position 46 (approximately 5% of rod insertion) is small and the time required to insert this amount of reactivity is not explicitly considered in the transient analysis. A generic BWR/2–5 study showed that relaxing the 5% rod insertion time requirement had a negligible impact on plant transient performance. Increasing the allowable average scram insertion time to rod position 46 for all Operable control rods, while increasing the allowable average scram insertion time to rod position 46 for the three fastest control rods in any 2X2 array, would still demonstrate that the CRD system will perform its intended function. Therefore, increasing the limits proposed does not create the possibility of a new or different kind of accident from any previously evaluated. Scram time is a measure of CRD performance for operability. As such, it is not the initiator of any plant event.

(3) The safety limit most affected by an increase in scram times is the Minimum Critical Power Ratio (MCPR). The DAEC [technical specification] TS safety limit for MCPR is 1.07. To ensure that the MCPR safety limit is not exceeded during design basis transients and accidents, an operating limit is conservatively placed on the MCPR during normal plant operation (OLMCPR). The amount of reactivity inserted at rod position 46 (approximately 5% of rod insertion) is small. The analysis used to establish the OLMCPR does not consider the scram insertion time at position 46 but does consider the scram insertion time to rod position 38 for the most limiting transient (turbine load rejection without bypass). The required scram time to position 38 remains unchanged by this proposed amendment. A generic BWR/2–5 study showed that relaxing the 5% rod insertion time requirement had a negligible impact on plant transient performance. This change will not result in any changes to the calculated OLMCPR, which assures that the safety limit MCPR will not be exceeded. Therefore, this change will not reduce the margin of safety.

The NRC staff has reviewed the licensee's analysis and, based on this review, it appears that the three standards of 10 CFR 50.92(c) are satisfied. Therefore, the NRC staff proposes to determine that the amendment request involves no significant hazards consideration.

Local Public Document Room location: Cedar Rapids Public Library, 500 First Street, S.E., Cedar Rapids, Iowa 52401.

Attorney for licensee: Jack Newman, Kathleen H. Shea, Morgan, Lewis, & Bockius, 1800 M Street, NW., Washington, DC 20036–5869.

NRC Project Director: Gail H. Marcus.

Northeast Nuclear Energy Company, et al., Docket No. 50–336, Millstone Nuclear Power Station, Unit No. 2, New London, Connecticut

Date of amendment request: December 18, 1995.

Description of amendment request: The Allowable Value for the Reactor Coolant Flow Instrumentation contained in Table 2.2–1 is proposed to be changed to reflect the design changes implemented during the last refueling outage. The Reactor Coolant System (RCS) Steam Generator Differential Pressure Instrumentation Loops have been modified to reflect a re-calibration of the differential pressure transmitter from ''-8 to 64 psid'' to ''0 to 35 psid,'' and an elimination of the Foxboro signal characterizer modules from the instrument loop string.

Additionally, an editorial change is proposed for the text associated with the allowable value. The current wording ''reactor coolant'' is being changed to ''reactor coolant flow.''

Basis for proposed no significant hazards consideration determination: As required by 10 CFR 50.91(a), the licensee has provided its analysis of the issue of no significant hazards consideration which is presented below:

Pursuant to 10 CFR 50.92, NNECO has reviewed the proposed changes. NNECO concludes that these changes do not involve a significant hazards consideration (SHC) since the proposed changes satisfy the criteria in 10 CFR 50.92(c). That is, the proposed changes do not:

1. Involve a significant increase in the probability or consequences of an accident previously evaluated.

The proposed change to the Allowable Value of the Reactor Coolant Flow Instrumentation is based on design changes that reduce the uncertainties in the overall instrument loop, as well as improved calculation methodology for instrument uncertainty and setpoint. The new hardware configuration results in calculated uncertainties which are bounded by the Safety Analysis assumptions. There is no adverse impact on any design basis analysis due to this change, and, therefore does not affect the probability or consequence of any previously evaluated accident.

Additionally, the proposed change to add the word ''flow'' is an editorial correction and therefore does not affect the probability or consequence of any previously evaluated accident.

2. Create the possibility of a new or different kind of accident from any accident previously evaluated.

The new Allowable Value has been calculated using an improved methodology. The new hardware configuration results in calculated uncertainties which are bounded by the Safety Analysis assumptions. The function of the Allowable Value is not changed. Therefore no new accident scenarios are created.

Additionally, the proposed change to add the word ''flow'' is an editorial correction and therefore no new accident scenarios are created.

3. Involve a significant reduction in a margin of safety.

The change to the Allowable Value for the Reactor Coolant Flow Instrumentation reflects the design changes implemented during the last refueling outage. The design improvement of the loop performance ensures that the assumptions of the Safety Analysis are met. Since the proposed changes do not affect the consequences of any accident previously analyzed, there is no reduction in a margin of safety.

Additionally, the proposed change to add the word ''flow'' is an editorial correction and has no effect on the margin of safety.

The NRC staff has reviewed the licensee's analysis and, based on this review, it appears that the three standards of 10 CFR 50.92(c) are satisfied. Therefore, the NRC staff proposes to determine that the amendment request involves no significant hazards consideration.

Local Public Document Room location: Learning Resources Center, Three Rivers Community-Technical College, 574 New London Turnpike, Norwich, CT 06360.

Attorney for licensee: Lillian M. Cuoco, Esq., Senior Nuclear Counsel, Northeast Utilities Service Company, P.O. Box 270, Hartford, CT 06141–0270.

NRC Project Director: Phillip F. McKee.

Northeast Nuclear Energy Company, et al., Docket No. 50–336, Millstone Nuclear Power Station, Unit No. 2, New London, Connecticut

Date of amendment request: January 5, 1996.

Description of amendment request: Northeast Nuclear Energy Company (NNECO) is proposing to implement the guidance of Generic Letter 93–08 and relocate Tables 3.3–2, ''Reactor Protective Instrumentation Response Times'' and 3.3–5, ''Engineered Safety Features Response Times'' from the technical specifications to the Millstone Unit No. 2 Technical Requirements Manual (TRM). In accordance with Generic Letter 93–08, the Limiting Conditions for Operations for Technical Specifications 3.3.1.1, 3.3.2.1, and 3.7.1.6 are also proposed to be revised to eliminate their references to the aforementioned tables. NNECO has also proposed to revise Bases 3/4.3.1 and 3/4.3.2 to reference that the instrument response times are located in the TRM and that these tables in the TRM are now controlled under 10CFR50.59. NNECO also proposes to remove a cycle-specific note from Tables 3.3–3 and 3.3–4.

Basis for proposed no significant hazards consideration determination: As required by 10 CFR 50.91(a), the licensee has provided its analysis of the issue of no significant hazards consideration which is presented below:

In accordance with 10CFR50.92, NNECO has reviewed the attached proposed changes and has concluded that they do not involve a significant hazards consideration. The basis of this conclusion is that the three criteria of 10CFR50.92(c) are not compromised. The proposed changes do not involve a significant hazards consideration because the changes would not:

1. Involve a significant increase in the probability or consequences of an accident previously evaluated.

The proposed license amendment will remove the reactor protective system and engineered safety feature actuation response times from the technical specifications. This proposed change will not affect the operation of the reactor protective system and the engineered safety feature actuation system. Operability and surveillance requirements are still maintained in the technical specifications and the response times will be included and maintained in the Technical Requirements Manual (TRM). Once relocated to the TRM, any future proposed changes will require a safety evaluation and Plant Operations Review Committee review.

The proposed license amendment will also delete the cycle-specific note contained in Tables 3.3–2 and 3.3–4. This is administrative in nature and do not result in changes to plant configuration, operation, accident mitigation, or analysis assumptions. The notes was in effect only during Cycle 12.

Since the systems will not be affected by the proposed changes, there is no impact on the performance of these systems or on the probability or consequences of an accident previously analyzed.

2. Create the possibility of a new or different kind of accident from any previously evaluated.

There are no new failure modes associated with the proposed changes. Since the plant will continue to operate as designed, the proposed changes will not modify plant responses to the point where it can be considered a new or different kind of accident.

Involve a significant reduction in a margin of safety.

The proposed changes do not have any adverse impact on the protective boundaries nor do they affect the consequences of any accident previously analyzed. The portion of the change associated with Generic Letter 93–08 will not affect the technical specification operability and surveillance requirements which will still ensure that the systems are tested and are within limits. Changing the limits requires a safety evaluation and Plant Operations Review Committee review. This will ensure that the licensing basis is maintained.

The proposed changes to delete the cycle-specific notes are administrative in nature and do not result in changes to plant configuration, operation, accident mitigation, or analysis assumptions. The notes were in effect only during Cycle 12.

Therefore, the proposed changes will not result in a significant reduction in the margin of safety.

The NRC staff has reviewed the licensee's analysis and, based on this review, it appears that the three standards of 10 CFR 50.92(c) are satisfied. Therefore, the NRC staff proposes to determine that the amendment request involves no significant hazards consideration.

Local Public Document Room location: Learning Resources Center, Three Rivers Community-Technical College, 574 New London Turnpike, Norwich, CT 06360.

Attorney for licensee: Lillian M. Cuoco, Esq., Senior Nuclear Counsel, Northeast Utilities Service Company, P.O. Box 270, Hartford, CT 06141–0270.

NRC Project Director: Phillip F. McKee.

Northeast Nuclear Energy Company, et al., Docket No. 50–336, Millstone Nuclear Power Station, Unit No. 2, New London, Connecticut

Date of amendment request: January 26, 1996.

Description of amendment request: The licensee proposes to modify the Technical Specifications for Millstone Unit No. 2 as follows:

1. Limiting Condition for Operation 3.6.1.2.a-c: Replace the less than or equal to sign with a ''<'' sign for consistency with Appendix J wording on leakage limits.

2. Surveillance Requirements:

a. Type ''A'' tests: Surveillance Requirements 4.6.1.2.a-c are revised to replace specific guidance with a reference to the Containment Leakage Testing Program.

b. Type ''B & C'' tests: Surveillance Requirement 4.6.1.2.d-e are revised to replace specific guidance with a reference to the Containment Leakage Testing Program.

c. Air lock tests: Surveillance Requirements 4.6.1.3.a-c are revised to replace specific guidance with a reference to the Containment Leakage Testing Program.

d. Containment Linear Plate Visual Inspection: Surveillance Requirement 4.6.1.6.3 is revised to replace specific guidance with a reference to the Containment Leakage Testing Program.

e. Other Surveillance Requirements: 4.6.1.1.d and 4.6.1.2.g-h are replaced by the reference to the Containment Leakage Testing Program.

3. Bases section 3/4.6.1.2 Containment Leakage is revised to reflect the above changes including a reference to the Containment Leakage Testing Program. In addition, the specific value of Pa is being deleted. Since Pa is a calculated value it is possible for the value of Pa to change should the loss of coolant accident be reanalyzed.

4. Administrative Controls: Section 6.19 is added to establish a Containment Leakage Testing Program, as specified in Regulatory Guide 1.163, dated September 1995.

Basis for proposed no significant hazards consideration determination: As required by 10 CFR 50.91(a), the licensee has provided its analysis of the issue of no significant hazards consideration which is presented below:

Pursuant to 10CFR50.92, NNECO has reviewed the proposed use of 10CFR50, Appendix J, Option B Containment Leak Rate Testing criteria for Millstone Unit No. 2. NNECO concludes that these changes do not involve a significant hazards consideration since the proposed change satisfies the criteria in 10CFR50.92(c). That is, the proposed changes do not:

1. Involve a significant increase in the probability or consequences of an accident previously analyzed.

The changes involved in this license amendment request revise the testing criteria for the containment penetrations. The revised criteria will be based on the guidance in Regulatory Guide 1.163, ''Performance-Based Containment Leak-Test Program.'' This guidance allows for the use of relaxed testing frequencies for containment penetrations that have performed satisfactorily on a historical basis. The Containment Leak Rate Testing

Program considers the type of service, the design of the penetration, and the safety impact of the penetration in determining the testing interval of each penetration. The NRC Staff has reviewed the potential impact of performance-based testing frequencies for containment penetrations during the development of the Option B regulation. The NRC Staff review is documented in NUREG–1493 ''Performance-Based Containment Leakage Test Program.'' The review concluded that reducing the frequency of Type A tests (Integrated Leak Rate Tests) from three per ten years to one per ten years leads to an imperceptible increase in risk. For Type B and C testing (Local Leak Rate Tests), the change in testing frequency should not have significant impact since this leakage contributes less than 0.1 percent of the overall risk based on the existing regulations. The use of Option B will allow the extension of testing intervals with a minimal impact on the radiological release rates since most penetration leakage is continually well below the specified limits. In the accident risk evaluation, the NRC Staff noted that the accident risk is relatively insensitive to the containment leakage rate because the accident risk is dominated by accident sequences that result in failure of or bypass of the containment. The use of a performance-based testing program will continue to provide assurance that the accident analysis assumptions remain bounding. Therefore, the proposed change does not involve a significant increase in the probability or consequences of an accident previously analyzed.

Changes to the Administrative section describe the containment testing program only and cannot increase the probability or consequences of an accident previously analyzed.

2. Create the possibility of a new or different kind of accident from any previously analyzed.

The proposed license amendment does not change the operation or equipment of the plant. The change in the test frequency is dependent on the establishment of a Containment Leak Test Program. This test program will ensure the performance history of each penetration is satisfactory prior to the changing of any test frequency. Since the performance history of the penetration will be known, there is no possibility of the implementation of the program creating a new or different kind of accident than previously analyzed. Since there is no change to the equipment or the operation of the plant, there is no possibility of creating a new or different kind of accident than previously analyzed. Therefore, the proposed change does not create the possibility of a new or different kind of accident from any previously analyzed.

Changes to the Administrative section describe the containment testing program only and cannot create a different accident from any previously analyzed.

3. Involve a significant reduction in the margin of safety.

During the development of 10CFR50, Appendix J, Option B, the NRC Staff determined the reduction in safety associated with the implementation of the performance-based testing program. The results of this review are documented in NUREG–1493. The review concluded that reducing the frequency of Type A tests (Integrated Leak Rate Tests) from three per ten years to one per ten years leads to an imperceptible increase in risk. For Type B and C testing (Local Leak Rate Tests), the increase in testing frequency should not have significant impact since this leakage contributes less than 0.1 percent of the overall risk-based on the existing regulations. The use of Option B will allow the extension of testing intervals with a minimal impact on the radiological release rates since most penetration leakage is continually well below the specified limits. In the accident risk evaluation, the NRC Staff noted that the accident risk is relatively insensitive to the containment leakage rate because the accident risk is dominated by accident sequences that result in failure of or bypass of the containment. The use of a performance based testing program will continue to provide assurance that the accident analysis assumptions remain bounding. Therefore, this change does not involve a significant reduction in the margin of safety.

Changes to the Administrative section describe the containment testing program only and cannot reduce the margin of safety.

The NRC staff has reviewed the licensee's analysis and, based on this review, it appears that the three standards of 10 CFR 50.92(c) are satisfied. Therefore, the NRC staff proposes to determine that the amendment request involves no significant hazards consideration.

Local Public Document Room location: Learning Resources Center, Three Rivers Community-Technical College, 574 New London Turnpike, Norwich, CT 06360.

Attorney for licensee: Lillian M. Cuoco, Esq., Senior Nuclear Counsel, Northeast Utilities Service Company, P.O. Box 270, Hartford, CT 06141–0270.

NRC Project Director: Phillip F. McKee.

Public Service Electric & Gas Company, Docket No. 50–354, Hope Creek Generating Station, Salem County, New Jersey

Date of amendment request: January 11, 1996.

Description of amendment request: The proposed amendments would revise Section 6.0 (Administrative Controls) of the Salem and Hope Creek Technical Specifications to: (1) relocate the requirements of Section 6.5 (Station Operations Review Committee, Nuclear Safety Review and Audit, and Technical Review and Control) to the Quality Assurance Program, (2) replace specific management titles with generic management functional positions, (3) change Operating Engineer to Assistant Operations Manager, (4) require a Senior Reactor Operator license be held by either the Operations Manager or one of the Assistant Operations Managers, and 5) correct some typographical errors in Section 6.0.

Basis for proposed no significant hazards consideration determination: As required by 10 CFR 50.91(a), the licensee has provided its analysis of the issue of no significant hazards consideration, which is presented below:

1. Will not involve a significant increase in the probability or consequences of an accident previously evaluated.

A portion of the proposed changes involves the relocation of the requirements for the Station Operations Review Committee, Nuclear Safety Review and Audit, and Technical Review and Control. These requirements are contained in Administrative Controls Section 6.5 of the Salem and Hope Creek Technical Specifications. The requirements to be relocated do not meet the criteria set forth in the Commission's Final Policy Statement for inclusion in Technical Specifications and therefore, may be relocated to an appropriate licensee controlled document (i.e., the Quality Assurance Program). Another element of the proposed change involves a modification which consists of stating that either the Operations Manager or Assistant Operations Manager shall hold a Senior Reactor Operator (SRO) license and replacing the title of Operating Engineer with Assistant Operations Manager.

The requirements being changed are not required by 10 CFR 50.36 and are not required to obviate the possibility of an abnormal situation or event giving rise to an immediate threat to the public health and safety. The changes are consistent with NUREG–1431 and NUREG–1433, Revision 1, and have been previously evaluated by the NRC. The remaining portions of the proposed changes consist of management title changes, including changing Operating Engineer to Assistant Operations Manager, and correction of typographical errors.

All of the proposed changes are administrative in nature and do not affect assumptions contained in the plant safety analysis, the physical design and/or operation of the plant, nor do they affect Technical Specifications that preserve safety analysis assumptions. Implementation of these changes is expected to enable PSE&G [Public Service Electric & Gas] and the NRC to focus on requirements important to safety. Therefore, the proposed changes will not involve a significant increase in the probability or consequences of an accident previously evaluated.

2. Will not create the possibility of a new or different kind of accident from any accident previously evaluated.

The proposed changes are purely administrative and do not involve changes to operating procedures or physical modifications to the plants. Therefore, the proposed changes will not create the possibility of a new or different type of accident from any accident previously evaluated.

3. Will not involve a significant reduction in a margin of safety.

The changes discussed herein will not involve a significant reduction in a margin of safety since the proposed changes do not eliminate any existing Technical Specification requirements. All requirements removed from Technical Specifications are relocated to another licensee controlled program (i.e., the Quality Assurance Program). The Quality Assurance Program is controlled by existing regulations which provide a more appropriate vehicle for addressing changes and compliance. There are no administrative control requirements removed from the Technical Specifications which are not addressed by other regulations and regulatory requirements (i.e., 10CFR50 Appendix B, 10CFR50.59, 10CFR50.54(a), and NUREG–0737).

Prior to this proposed change it was a Technical Specification requirement that the Operating Engineer hold an SRO license.

Specification 5.2.2.f of NUREG–1431 and NUREG–1433, Revision 1, states that an SRO license shall be held by either the Operations Manager or Assistant Operations Manager. The Operating Engineer and Assistant Operations Manager are equivalent positions at Salem and Hope Creek. Chapter 13 of the respective plant's Updated Final Safety Analysis Report, states that the Operations Manager is assisted by the Assistant Operations Manager (formerly the Operating Engineer) and other supervisory personnel. The Assistant Operations Manager reports directly to the Operations Manager and will assume the authority and responsibility of the department in the absence of the Operations Manager. The title change from Operating Engineer to Assistant Operations Manager reflects the organizational changes underway at Salem and Hope Creek. The duties and responsibilities associated with the two positions are identical. The option that either the Operations Manager or Assistant Operations Manager hold an SRO license is consistent with prior approved amendments for Salem and Hope Creek. These amendments [were] approved based on the fact that the organizational structure contained a direct report to the Operations Manager [who] is required to hold an SRO license. With the proposed change either the Operations Manager or a direct report (i.e., Assistant Operations Manager), is required to hold an SRO license. The change is also consistent with the 1993 version of ANSI/ANS 3.1, ''American National Standard for Selection, Qualification and Training of Personnel for Nuclear Power Plants,'' and NUREG–1431 and 1433, Revision 1. This change will not involve a significant reduction in a margin of safety since it is still required that either the Operations Manager or Assistant Operations Manager holds an SRO license.

The other management title changes also will not involve a significant reduction in a margin of safety since all organizational responsibilities are and will continue to be implemented in accordance with applicable requirements.

The proposed changes are administrative in nature and do not relate to or modify a margin of safety defined and maintained by the Technical Specifications. Therefore, the proposed changes will not involve a significant reduction in a margin of safety.

The NRC staff has reviewed the licensee's analysis and, based on this review, it appears that the three standards of 10 CFR 50.92(c) are satisfied. Therefore, the NRC staff proposes to determine that the amendment request involves no significant hazards consideration.

Local Public Document Room location: Pennsville Public Library, 190 S. Broadway, Pennsville, New Jersey 08070.

Attorney for licensee: M. J. Wetterhahn, Esquire, Winston and Strawn, 1400 L Street, NW., Washington, DC 20005–3502.

NRC Project Director: John F. Stolz.

Public Service Electric & Gas Company, Docket Nos. 50–272 and 50–311, Salem Nuclear Generating Station, Unit Nos. 1 and 2, Salem County, New Jersey

Date of amendment request: January 4, 1996.

Description of amendment request: The proposed amendments would change Technical Specification 3/4.8.2.5, ''28-Volt D.C. Distribution-Operating.'' The amendments would make Unit 1 requirements similar to Unit 2 by defining the specific battery chargers that are required for each train and by restricting the use of the backup battery charger for a 7-day period. The amendments would also require the 28-Volt DC bus be energized for that bus to be OPERABLE.

Basis for proposed no significant hazards consideration determination: As required by 10 CFR 50.91(a), the licensee has provided its analysis of the issue of no significant hazards consideration, which is presented below:

1. Will not involve a significant increase in the probability or consequences of an accident previously evaluated.

The proposed changes do not alter plant configuration or operation. The proposed changes do not invalidate any of the parameters assumed in the UFSAR [Updated Final Safety Analysis Report] accident analyses. The proposed changes provide additional guidance to be used to ensure the operability of the safety related batteries, and requires the DC buses to be operable and energized consistent with the Limiting Condition for Operation (LCO). Operability of these buses provide control room instrumentation power in support of mitigating Design Basis Accidents.

The changes to the Unit 1 Technical Specification (TS) 3.8.2.5 LCO and Action Statements restrict the use of the backup battery chargers, thereby limiting the amount of time that the chargers are allowed to be powered from another AC Vital bus. This change brings the Unit 1 TS into agreement with Unit 2, and results in a more conservative Unit 1 TS since both alternate battery chargers are fed from the same 230 V vital AC bus.

Therefore, the proposed amendment does not involve a significant increase in the probability or consequences of an accident previously evaluated.

2. Will not create the possibility of a new or different kind of accident from any previously evaluated.

The proposed changes do not introduce any design or physical configuration changes to the facility, or change the function of the 28-Volt DC Distribution System. Therefore, the proposed amendment will not create the possibility of a new or different kind of accident from any previously evaluated.

3. Will not involve a significant reduction in a margin of safety.

The proposed changes provide additional guidance to be used to ensure the operability of the safety related batteries. The changes to the Unit 1 Technical Specification (TS) 3.8.2.5 LCO and Action Statements restrict the use of the backup battery chargers, thereby limiting the amount of time that the chargers are allowed to be powered from another AC Vital bus. This change brings the Unit 1 TS into agreement with Unit 2, and results in a more conservative Unit 1 TS by precluding the possibility of both the 1A and 1B battery/buses from being supplied from a single bus. Therefore, the proposed amendment will not involve a significant reduction in a margin of safety.

The NRC staff has reviewed the licensee's analysis and, based on this review, it appears that the three standards of 10 CFR 50.92(c) are satisfied. Therefore, the NRC staff proposes to determine that the amendment request involves no significant hazards consideration.

Local Public Document Room location: Salem Free Public library, 112 West Broadway, Salem, New Jersey 08079.

Attorney for licensee: Mark J. Wetterhahn, Esquire, Winston and Strawn, 1400 L Street, NW, Washington, DC 20005–3502.

NRC Project Director: John F. Stolz.

Public Service Electric & Gas Company, Docket Nos. 50–272 and 50–311, Salem Nuclear Generating Station, Unit Nos. 1 and 2, Salem County, New Jersey

Date of amendment request: January 11, 1996.

Description of amendment request: The proposed amendments would revise Section 6.0 (Administrative Controls) of the Salem and Hope Creek Technical Specifications to: (1) relocate the requirements of Section 6.5 (Station Operations Review Committee, Nuclear Safety Review and Audit, and Technical Review and Control) to the Quality Assurance Program, (2) replace specific management titles with generic management functional positions, (3)

change Operating Engineer to Assistant Operations Manager, (4) require a Senior Reactor Operator license be held by either the Operations Manager or one of the Assistant Operations Managers, and (5) correct some typographical errors in Section 6.0.

Basis for proposed no significant hazards consideration determination: As required by 10 CFR 50.91(a), the licensee has provided its analysis of the issue of no significant hazards consideration, which is presented below:

1. Will not involve a significant increase in the probability or consequences of an accident previously evaluated.

A portion of the proposed changes involves the relocation of requirements for the Station Operations Review Committee, Nuclear Safety Review and Audit, and Technical Review and Control. These requirements are contained in Administrative Controls Section 6.5 of the Salem and Hope Creek Technical Specifications. The requirements to be relocated do not meet the criteria set forth in the Commission's Final Policy Statement for inclusion in Technical Specifications and therefore, may be relocated to an appropriate licensee controlled document (i.e., the Quality Assurance Program). Another element of the proposed change involves a modification which consists of stating that either the Operations Manager or Assistant Operations Manager shall hold a Senior Reactor Operator (SRO) license and replacing the title of Operating Engineer with Assistant Operations Manager.

The requirements being changed are not required by 10 CFR 50.36 and are not required to obviate the possibility of an abnormal situation or event giving rise to an immediate threat to the public health and safety. The changes are consistent with NUREG–1431 and NUREG–1433, Revision 1, and have been previously evaluated by the NRC. The remaining portions of the proposed changes consist of management title changes, including changing Operating Engineer to Assistant Operations Manager, and correction of typographical errors.

All of the proposed changes are administrative in nature and do not affect assumptions contained in the plant safety analysis, the physical design and/or operation of the plant, nor do they affect Technical Specifications that preserve safety analysis assumptions. Implementation of these changes is expected to enable PSE&G [Public Service Electric & Gas Company] and the NRC to focus on requirements important to safety. Therefore, the proposed changes will not involve a significant increase in the probability or consequences of an accident previously evaluated.

2. Will not create the possibility of a new or different kind of accident from any accident previously evaluated.

The proposed changes are purely administrative and do not involve changes to operating procedures or physical modifications to the plants. Therefore, the proposed changes will not create the possibility of a new or different type of accident from any accident previously evaluated.

3. Will not involve a significant reduction in a margin of safety.

The changes discussed herein will not involve a significant reduction in a margin of safety since the proposed changes do not eliminate any existing Technical Specification requirements. All requirements removed from Technical Specifications are relocated to another licensee controlled program (i.e., the Quality Assurance Program). The Quality Assurance Program is controlled by existing regulations which provide a more appropriate vehicle for addressing changes and compliance. There are no administrative control requirements removed from the Technical Specifications which are not addressed by other regulations and regulatory requirements (i.e., 10CFR50 Appendix B, 10CFR50.59, 10CFR50.54(a), and NUREG–0737).

Prior to this proposed change it was a Technical Specification requirement that the Operating Engineer hold an SRO license. Specification 5.2.2.f of NUREG–1431 and NUREG–1433, Revision 1, states that an SRO license shall be held by either the Operations Manager or Assistant Operations Manager. The Operating Engineer and Assistant Operations Manager are equivalent positions at Salem and Hope Creek. Chapter 13 of the respective plant's Updated Final Safety Analysis Report, states that the Operations Manager is assisted by the Assistant Operations Manager (formerly the Operating Engineer) and other supervisory personnel. The Assistant Operations Manager reports directly to the Operations Manager and will assume the authority and responsibility of the department in the absence of the Operations Manager. The title change from Operating Engineer to Assistant Operations Manager reflects the organizational changes underway at Salem and Hope Creek. The duties and responsibilities associated with the two positions are identical. The option that either the Operations Manager or Assistant Operations Manager hold an SRO license is consistent with prior approved amendments for Salem and Hope Creek. These amendments [were] approved based on the fact that the organizational structure contained a direct report to the Operations Manager [who] is required to hold an SRO license. With the proposed change either the Operations Manager or a direct report (i.e., Assistant Operations Manager) is required to hold an SRO license. The change is also consistent with the 1993 version of ANSI/ANS 3.1, ''American National Standard for Selection, Qualification and Training of Personnel for Nuclear Power Plants'', and NUREG–1431 and 1433, Revision 1. This change will not involve a significant reduction in a margin of safety since it is still required that either the Operations Manager or Assistant Operations Manager holds an SRO license.

The other management title changes also will not involve a significant reduction in a margin of safety since all organizational responsibilities are and will continue to be implemented in accordance with applicable requirements.

The proposed changes are administrative in nature and do not relate to or modify a margin of safety defined and maintained by the Technical Specifications. Therefore, the proposed changes will not involve a significant reduction in a margin of safety.

The NRC staff has reviewed the licensee's analysis and, based on this review, it appears that the three standards of 10 CFR 50.92(c) are satisfied. Therefore, the NRC staff proposes to determine that the amendment request involves no significant hazards consideration.

Local Public Document Room location: Salem Free Public library, 112 West Broadway, Salem, New Jersey 08079.

Attorney for licensee: Mark J. Wetterhahn, Esquire, Winston and Strawn, 1400 L Street, NW, Washington, DC 20005–3502.

NRC Project Director: John F. Stolz

Union Electric Company, Docket No. 50–483, Callaway Plant, Unit 1, Callaway County, Missouri.

Date of amendment request: January 2, 1996.

Description of amendment request: The proposed amendment would revise TS 3.9.4 and its associated Bases section to allow the containment personnel airlock doors to be open during core alterations and movement of irradiated fuel in containment. In addition, TS Surveillance Requirement 4.9.4 would be revised to specify that each containment penetration should be in its ''required position'' instead of a ''closed/isolated condition.''

Basis for proposed no significant hazards consideration determination: As required by 10 CFR 50.91(a), the licensee has provided its analysis of the issue of no significant hazards consideration, which is presented below:

1. The proposed change does not involve a significant increase in the probability or consequences of an accident previously evaluated.

The proposed change to TS 3.9.4 would allow the containment personnel airlock to be open during fuel movement and core alterations. The containment personnel airlock is currently closed during fuel movement and core alterations to prevent the escape of radioactive material in the event of a fuel handling accident.

The containment airlocks are passive components integral to the containment structure and are not evaluated to be accident initiators; therefore, the proposed amendment does not involve an increase in the probability of an accident previously evaluated.

The proposed change alters assumptions previously made in evaluating the radiological consequences of the fuel handling accident inside the containment building because the containment personnel airlock is assumed to be open. The

radiological consequences described in this change are bounded by the Loss of Coolant Accident and General Design Criteria 19. All doses for the proposed change are less than the acceptance criteria, therefore, there is no significant increase in the consequences of an accident previously analyzed.

In evaluating the consequences of this accident, NRC states in Section 15.4.6. of the Callaway Plant Safety Evaluation Report (NUREG–0830) that: ''The potential doses for the fuel handling accident are well within the guideline values given in 10 CFR Part 100.'' Section II.1 of the Standard Review Plan defines ''well within'' to be 25% or less of the 10 CFR Part 100 exposure guideline values. NSAC 125, Guidelines for 10 CFR 50.59 Safety Evaluations, Section 3.6, states: ''If in licensing the plant the NRC explicitly found that the plant's response to a particular event was acceptable because the dose was less than the SRP guidelines (without further qualification), then the NRC implicitly accepted the SRP guideline as the licensing basis for the plant and the particular event, and the licensee may make changes that increase the consequences for the particular event, up to this value without prior NRC approval.'' Therefore, in the case of the fuel handling accident, NRC has implicitly accepted 25% of the 10 CFR Part 100 exposure guidelines as the acceptance limit.

Since the probability of a fuel handling accident is unaffected by the airlock door positions, and the increased doses do not exceed acceptance limits, operation of the facility in accordance with the proposed amendment would not involve a significant increase in the probability or consequences of any accident previously evaluated.

2. The proposed change does not create the possibility of a new or different kind of accident from any accident previously evaluated.

The proposed change to allow the containment personnel airlock to be open during core alteration and movement of irradiated fuel affects a previously evaluated accident (e.g., a fuel handling accident inside containment). The existing accident analysis has been modified to account for the containment personnel airlock doors being opened at the time of the accident. It does not represent a significant change in the configuration or operation of the plant. Therefore, operation of the facility in accordance with the proposed amendment would not create the possibility of a new or different kind of accident from any accident previously evaluated.

3. The proposed change does not involve a significant reduction in a margin of safety.

The margin of safety is reduced when the offsite and control room doses exceed the acceptance criteria in General Design Criteria 19 and the Standard Review Plan. As previously discussed in the response to Item 1, the offsite and control room doses are below the acceptance criteria. Therefore, operation of the facility in accordance with the proposed amendment would not involve a reduction in the margin of safety.

The NRC staff has reviewed the licensee's analysis and, based on this review, it appears that the three standards of 10 CFR 50.92(c) are satisfied. Therefore, the NRC staff proposes to determine that the amendment request involves no significant hazards consideration.

Local Public Document Room location: Callaway County Public Library, 710 Court Street, Fulton, Missouri 65251.

Attorney for licensee: Gerald Charnoff, Esq., Shaw, Pittman, Potts & Trowbridge, 2300 N Street, NW., Washington, DC 20037.

NRC Project Director: William H. Bateman.

Washington Public Power Supply System, Docket No. 50–397, Nuclear Project No. 2, Benton County, Washington

Date of amendment request: January 19, 1996.

Description of amendment request: The proposed amendment would modify the Technical Specifications (TS) for leak tests of containment isolation valves. The proposed amendment replaces the current specified surveillance intervals for containment leak testing with new surveillance requirements to conduct containment leak testing based on a performance-based containment leak test program. The licensee proposed use of performance-based testing in accordance with the revised 10 CFR Part 50 Appendix J (60 FR 49495), which would establish surveillance intervals based on the historical performance of the tested penetrations. In addition, the proposed amendment would extend the surveillance interval for leak testing of main steam isolation valves from the current 18 months to 30 months, consistent with Regulatory Guide 1.163.

Basis for proposed no significant hazards consideration determination: As required by 10 CFR 50.91(a), the licensee has provided its analysis of the issue of no significant hazards consideration. The NRC staff has reviewed the licensee's analysis against the standards of 10 CFR 50.92(c). The NRC staff's review is presented below.

1. The proposed change does not involve a significant increase in the probability or consequences of an accident previously evaluated.

The proposed changes modify the interval at which the containment leak rate testing is performed. The proposed change does not affect the containment leakage limits currently in the plant licensing basis and specified in the existing TS. Consequently, the radiological consequences of containment leakage during and after an accident are unchanged. The frequency of testing and the test methodology for containment leak rate testing are not identified as factors in the initiation, progression, or mitigation of any accident previously evaluated. The proposed change, therefore, does not involve a significant increase in the probability or consequences of an accident previously evaluated.

2. The proposed change does not create the possibility of a new or different kind of accident from any accident previously evaluated.

The proposed change potentially affects the current surveillance intervals for conducting containment leak rate testing. A change in the length of the surveillance interval does not change the design or performance mode of structures, systems, or components, and thus does not create the possibility of a new or different kind of accident from any accident previously evaluated.

3. The proposed change does not involve a significant reduction in a margin of safety.

The margin of safety for containment leakage is based on meeting the potential radiation exposure for occupational or postulated post-accident conditions. The margin for WNP–2 is established by ensuring these exposures do not exceed 10 CFR Parts 20 and 100, respectively. Basing the surveillance intervals on containment leak rate performance is expected to lengthen the surveillance interval, thus the proposed change is expected to lower the cumulative occupational radiation exposure to conduct the leak rate testing.

The performance criteria for the containment is based on ensuring that postulated post-accident radiation exposures remain within 10 CFR Part 100 limits. The proposed containment leak rate test program is based on ensuring that containment leakage is maintained below the level that will assure that radiation exposures resulting from postulated accident scenarios will remain below the regulatory limits. The length of time between tests will be based on historical performance of the tested penetrations. The change in test interval does not modify the current TS acceptance limits for containment leakage, and thus the proposed change does not involve a significant reduction in a margin of safety.

Based on this review, it appears that the three standards of 10 CFR 50.92(c) are satisfied. Therefore, the NRC staff proposes to determine that the amendment request involves no significant hazards consideration.

Local Public Document Room location: Richland Public Library, 955 Northgate Street, Richland, Washington 99352.

Attorney for licensee: M. H. Philips, Jr., Esq., Winston & Strawn, 1400 L Street, N.W., Washington, D.C. 20005–3502.

NRC Project Director: William H. Bateman.

Previously Published Notices of Consideration of Issuance of Amendments to Facility Operating Licenses, Proposed No Significant Hazards Consideration Determination, and Opportunity for a Hearing

The following notices were previously published as separate individual notices. The notice content was the same as above. They were published as individual notices either because time did not allow the Commission to wait for this biweekly notice or because the action involved exigent circumstances. They are repeated here because the biweekly notice lists all amendments issued or proposed to be issued involving no significant hazards consideration.

For details, see the individual notice in the Federal Register on the day and page cited. This notice does not extend the notice period of the original notice.

Public Service Electric & Gas Company, Docket No. 50–354, Hope Creek Generating Station, Salem County, New Jersey

Date of amendment request: December 28, 1995.

Brief description of amendment request: The proposed amendment would change Hope Creek Generating Station Technical Specification (TS) 1.4, ''Channel Calibration'', to define actions required for channel calibration of instrument channels containing resistance temperature detector or thermocouple sensors.

Date of publication of individual notice in Federal Register: January 5, 1996 (61 FR 420).

Expiration date of individual notice: February 5, 1996.

Local Public Document Room location: Pennsville Public Library, 190 S. Broadway, Pennsville, New Jersey 08070.

Notice of Issuance of Amendments to Facility Operating Licenses

During the period since publication of the last biweekly notice, the Commission has issued the following amendments. The Commission has determined for each of these amendments that the application complies with the standards and requirements of the Atomic Energy Act of 1954, as amended (the Act), and the Commission's rules and regulations. The Commission has made appropriate findings as required by the Act and the Commission's rules and regulations in 10 CFR Chapter I, which are set forth in the license amendment.

Notice of Consideration of Issuance of Amendment to Facility Operating License, Proposed No Significant Hazards Consideration Determination, and Opportunity for A Hearing in connection with these actions was published in the Federal Register as indicated.

Unless otherwise indicated, the Commission has determined that these amendments satisfy the criteria for categorical exclusion in accordance with 10 CFR 51.22. Therefore, pursuant to 10 CFR 51.22(b), no environmental impact statement or environmental assessment need be prepared for these amendments. If the Commission has prepared an environmental assessment under the special circumstances provision in 10 CFR 51.12(b) and has made a determination based on that assessment, it is so indicated.

For further details with respect to the action see (1) the applications for amendment, (2) the amendment, and (3) the Commission's related letter, Safety Evaluation and/or Environmental Assessment as indicated. All of these items are available for public inspection at the Commission's Public Document Room, the Gelman Building, 2120 L Street, NW., Washington, DC, and at the local public document rooms for the particular facilities involved.

Boston Edison Company, Docket No. 50–293, Pilgrim Nuclear Power Station, Plymouth County, Massachusetts

Date of application for amendment: July 14, 1995, as supplemented September 12 and December 8, 1995.

Brief description of amendment: The amendment changes the scram insertion times, Section 3.3.C, Minimum Critical Power Ration section, Section 4.11.C and, the associated Bases in Sections 2.1.1 and 3/4.4.3.

Date of issuance: January 23, 1996.

Effective date: As of the date of issuance to be implemented within 30 days.

Amendment No.: 165.

Facility Operating License No. DPR–35: Amendment revised the Technical Specifications.

Date of initial notice in Federal Register: August 2, 1995 (60 FR 39443) The Commission's related evaluation of the amendment is contained in a Safety Evaluation dated January 23, 1996.

No significant hazards consideration comments received: No.

Local Public Document Room location: Plymouth Public Library, 132 South Street, Plymouth, Massachusetts 02360.

Carolina Power & Light Company, et al., Docket No. 50–324, Brunswick Steam Electric Plant, Unit 2, Brunswick County, North Carolina

Date of amendment request: August 4, 1995.

Brief description of amendment: The amendment changes the Technical Specifications to (1) reflect the use of a new type of fuel (GE13) and (2) modify the minimum critical power ratio safety limit and the standby liquid control system sodium pentaborate limits to accommodate the GE13 fuel.

Date of issuance: January 31, 1996.

Effective date: January 31, 1996.

Amendment No.: 212.

Facility Operating License No. DPR–62: Amendment revises the Technical Specifications.

Date of initial notice in Federal Register: September 27, 1995 (60 FR 49931).

The Commission's related evaluation of the amendment is contained in a Safety Evaluation dated January 31, 1996.

No significant hazards consideration comments received: No.

Local Public Document Room location: University of North Carolina at Wilmington, William Madison Randall Library, 601 S. College Road, Wilmington, North Carolina 28403–3297.

Carolina Power & Light Company, et al., Docket Nos. 50–325 and 50–324, Brunswick Steam Electric Plant, Units 1 and 2, Brunswick County, North Carolina

Date of application for amendments: September 13, 1995, as amended on November 27, 1995, and January 29, 1996.

Brief Description of amendments: The amendments revise the Brunswick Steam Electric Plant, Units 1 and 2, Technical Specifications to permit the use of 10 CFR Part 50, Appendix J, Option B, Performance-Based Containment Leakage Rate Testing.

Date of issuance: February 1, 1996.

Effective date: February 1, 1996.

Amendment Nos.: 181 and 213.

Facility Operating License Nos. DPR–71 and DPR–62: Amendments change the Technical Specifications.

Date of initial notice in Federal Register: December 12, 1995 (60 FR 63739); repeated on January 3, 1996 (61 FR 188). The January 29, 1996, amendment to the application provided supplemental information that was not outside the scope of the December 12, 1995 notice.

The Commission's related evaluation of the amendments is contained in a Safety Evaluation dated February 1, 1996.

No significant hazards consideration comments received: No.

Local Public Document Room location: University of North Carolina at Wilmington, William Madison Randall Library, 601 S. College Road, Wilmington, North Carolina 28403–3297.

Carolina Power & Light Company, Docket No. 50–261, H. B. Robinson Steam Electric Plant, Unit No. 2, Darlington County, South Carolina

Date of application for amendment: September 11, 1995.

Brief description of amendment: Changes Technical Specification to add an allowance for Rod Insertion Limits (RILs) to be exceeded for a time no greater than the time criteria established by the axial power distribution methodology or 1 hour, whichever is sooner. An action is also added for the reactor to be placed in the hot shutdown condition within 6 hours if compliance with the RILs cannot be restored within the specified time period.

Date of issuance: January 26, 1996.

Effective date: January 26, 1996.

Amendment No.: 167.

Facility Operating License No. DPR–23. Amendment revises the Technical Specifications.

Date of initial notice in Federal Register: October 25, 1995 (60 FR 54716).

The Commission's related evaluation of the amendment is contained in a Safety Evaluation dated January 26, 1996.

No significant hazards consideration comments received: No.

Local Public Document Room location: Hartsville Memorial Library, 147 West College Avenue, Hartsville, South Carolina 29550.

Connecticut Yankee Atomic Power Company, Docket No. 50–213, Haddam Neck Plant, Middlesex County, Connecticut

Date of application for amendment: March 31, 1995, as supplemented November 14, 1995.

Brief description of amendment: The amendment revises the Haddam Neck Technical Specifications (TS) to delete TS Sections 1.38 and 1.39, ''Definitions, Fuel Assembly Types,'' revise TS Sections 3/4.9.3, ''Refueling Operations, Decay Time'' and 3/4.9.14, ''Refueling Operations, Spent Fuel Pool—Reactivity Condition,'' replace TS Sections 5.6.1.1, ''Spent Fuel,'' and 5.6.3, ''Capacity,'' and add a new TS Section 3/4.9.15, ''Refueling Operations, Spent Fuel Pool Cooling.'' These changes support a rerack of the spent fuel pool to expand the spent fuel pool's storage capacity from 1168 assemblies to 1480 assemblies so as to accommodate a full-core-discharge through the current validity date of the Haddam Neck Operating License (2007).

Date of Issuance: January 22, 1996.

Effective date: As of the date of issuance, to be implemented within 6 months.

Amendment No.: 188.

Facility Operating License No. DPR–61. Amendment revised the Technical Specifications.

Date of initial notice in Federal Register: May 12, 1995 (60 FR 25740).

The November 14, 1995, letter provided clarifying information that did not change the initial proposed no significant hazards consideration determination.

The Commission's related evaluation of this amendment is contained in a Safety Evaluation dated January 22, 1996.

No significant hazards consideration comments received: No.

Local Public Document Room location: Russell Library, 123 Broad Street, Middletown, CT 06457.

Duke Power Company, et al., Docket Nos. 50–413 and 50–414, Catawba Nuclear Station, Units 1 and 2, York County, South Carolina

Date of application for amendments: August 8, 1995.

Brief description of amendments: The amendments revise Technical Specification Table 4.4–4, ''Reactor Coolant Specific Activity Sample and Analysis Program,'' to allow reactor coolant system gross specific activity measurement method to be changed from the current degassed method to a non-degassed, or pressurized dilution, method.

Date of issuance: January 22, 1996.

Effective date: As of the date of issuance to be implemented within 30 days.

Amendment Nos.: Unit 1—141—Unit 2—135.

Facility Operating License Nos. NPF–35 and NPF–52: Amendments revised the Technical Specifications.

Date of initial notice in Federal Register: November 27, 1995 (60 FR 58400).

The Commission's related evaluation of the amendments is contained in a Safety Evaluation dated January 22, 1996.

No significant hazards consideration comments received: No.

Local Public Document Room location: York County Library, 138 East Black Street, Rock Hill, South Carolina 29730.

Duke Power Company, et al., Docket Nos. 50–413 and 50–414, Catawba Nuclear Station, Units 1 and 2, York County, South Carolina

Date of application for amendments: August 17, 1995.

Brief description of amendments: The amendments revise Technical Specification Surveillance Requirement (SR) 4.2.5.2 to delete the requirement to calibrate the reactor coolant system (RCS) flowrate measurement instrumentation within 7 days prior to the performance of the flow measurement. Catawba Units 1 and 2 now utilize an RCS flowrate measurement method based on a one-time calibration of the cold leg elbow differential pressure taps as requested in the licensee's January 10, 1994, application and as approved in License Amendments 128 and 122 for Units 1 and 2, respectively. The January 10, 1994, application did not include a proposal to delete that portion of SR 4.2.5.2 which specifies that the measurement instrumentation shall be calibrated within 7 days prior to the performance of the flowrate measurement. This portion of the SR is now deleted since it only applies to the precision calorimetric heat balance method of RCS flowrate measurement.

Date of issuance: January 23, 1996.

Effective date: As of the date of issuance to be implemented within 30 days.

Amendment Nos.: Unit 1—142—Unit 2—136.

Facility Operating License Nos. NPF–35 and NPF–52: Amendments revised the Technical Specifications.

Date of initial notice in Federal Register: December 20, 1995 (60 FR 65676).

The Commission's related evaluation of the amendments is contained in a Safety Evaluation dated January 23, 1996.

No significant hazards consideration comments received: No.

Local Public Document Room location: York County Library, 138 East Black Street, Rock Hill, South Carolina 29730.

Duke Power Company, Docket Nos. 50–369 and 50–370, McGuire Nuclear Station, Units 1 and 2, Mecklenburg County, North Carolina

Date of application for amendments: August 20, 1992, as supplemented by letter dated December 5, 1995.

Brief description of amendments: The amendments revise the Technical Specifications related to the 60-month

125-volt surveillance requirement (SR). The change is to delete the words ''during shutdown'' from SR 4.8.2.1.2.e.

Date of issuance: February 1, 1996.

Effective date: As of the date of issuance to be implemented within 30 days.

Amendment Nos.: Unit 1—163—Unit 2—145.

Facility Operating License Nos. NPF–9 and NPF–17: Amendments revised the Technical Specifications.

Date of initial notice in Federal Register: December 20, 1995 (60 FR 65677).

The Commission's related evaluation of the amendments is contained in a Safety Evaluation dated February 1, 1996.

No significant hazards consideration comments received: No.

Local Public Document Room location: Atkins Library, University of North Carolina, Charlotte (UNCC Station), North Carolina 28223.

Gulf States Utilities Company, Cajun Electric Power Cooperative, and Entergy Operations, Inc., Docket No. 50–458, River Bend Station, Unit 1, West Feliciana Parish, Louisiana

Date of amendment request: May 30, 1995, as supplemented by letters dated November 20 and December 12, 1995.

Brief description of amendment: The amendment revised the technical specifications for the drywell to permit bypass testing on a 10-year frequency with increased testing if performance degrades, changes the drywell air lock testing and surveillance requirements, deletes action notes for the drywell air lock and drywell isolation valves when the bypass leakage is not met, and deletes the specific leakage limits for the drywell air lock seal.

Date of issuance: January 29, 1996.

Effective date: January 29, 1996

Amendment No.: 87.

Facility Operating License No. NPF–47. The amendment revised the Technical Specifications.

Date of initial notice in Federal Register: December 6, 1995 (60 FR 62490).

The additional information contained in the supplemental letter dated December 12, 1995, was clarifying in nature and thus, within the scope of the initial notice and did not affect the staff's proposed no significant hazards consideration determination.

The Commission's related evaluation of the amendment is contained in a Safety Evaluation dated January 29, 1996.

No significant hazards consideration comments received. No.

Local Public Document Room location: Government Documents Department, Louisiana State University, Baton Rouge, Louisiana 70803.

Niagara Mohawk Power Corporation, Docket No. 50–220, Nine Mile Point Nuclear Station Unit No. 1, Oswego County, New York

Date of application for amendment: January 24, 1995

Brief description of amendment: The amendment revises Technical Specification 3.4.1, ''Leakage Rate,'' and the associated Bases section. Specifically, the TS allowable Reactor Building leakage rate is reduced from 2000 cfm to 1600 cfm.

Date of issuance: January 22, 1996.

Effective date: As of the date of issuance to be implemented within 30 days.

Amendment No.: 156.

Facility Operating License No. DPR–63: Amendment revises the Technical Specifications.

Date of initial notice in Federal Register: March 1, 1995 (60 FR 11134)

The Commission's related evaluation of the amendment is contained in a Safety Evaluation dated January 22, 1996.

No significant hazards consideration comments received: No.

Local Public Document Room location: Reference and Documents Department, Penfield Library, State University of New York, Oswego, New York 13126.

Northeast Nuclear Energy Company, et al., Docket Nos. 50–245, 50–336, and 50–423, Millstone Nuclear Power Station, Unit Nos, 1, 2, and 3 New London County, Connecticut

Date of application for amendments: August 4, 1995.

Brief description of amendments: The amendments revise the Administrative Controls sections of the Technical Specifications for Millstone 1, 2 and 3 to allow the implementation of a Station Qualified Reviewer Program (SQRP) for the review and approval of selected procedures, programs and changes thereto.

Date of issuance: January 17, 1996.

Effective date: As of the date of issuance, to be implemented within 30 days.

Amendment Nos.: 91, 193, and 125.

Facility Operating License Nos. DPR–21, DPR–65 and NPF–49: Amendments revised the Technical Specifications.

Date of initial notice in Federal Register: August 30, 1995 (60 FR 45181)

The Commission's related evaluation of the amendments is contained in a Safety Evaluation dated January 17, 1996.

No significant hazards consideration comments received: No.

Local Public Document Room location: Learning Resources Center, Three Rivers Community-Technical College, 574 New London Turnpike, Norwich, CT 06360.

PECO Energy Company, Public Service Electric and Gas Company, Delmarva Power and Light Company, and Atlantic City Electric Company, Docket Nos. 50–277 and 50–278, Peach Bottom Atomic Power Station, Unit Nos. 2 and 3, York County, Pennsylvania

Date of application for amendments: December 19, 1995.

Brief description of amendments: These amendments change the ventilation filter test program bypass and penetration leakage test acceptance criteria from less than 0.05 percent to less than 1.0 percent. The change corrects an administrative error that occurred during the development of the Peach Bottom Improved Technical Specifications which were issued as Amendments 210 and 214 to the Peach Bottom licenses on August 30, 1995.

Date of issuance: January 16, 1996.

Effective date: Unit 2, effective as of date of issuance, to be implemented concurrently with Amendment 210, issued August 30, 1995; Unit 3, effective as of date of issuance, to be implemented concurrently with Amendment 214, issued August 30, 1995.

Amendments Nos.: 213 and 218.

Facility Operating License Nos. DPR–44 and DPR–56: The amendments revised the Technical Specifications.

Public comments requested as to proposed no significant hazards consideration: Yes (60 FR 66997, December 27, 1995). That notice provided an opportunity to submit comments on the Commission's proposed no significant hazards consideration determination. No comments have been received. The notice also provided for an opportunity to request a hearing by January 26, 1996, but indicated that if the Commission makes a final no significant hazards consideration determination any such hearing would take place after issuance of the amendment.

The Commission's related evaluation of the amendments, finding of exigent circumstances, and final determination of no significant hazards consideration are contained in a Safety Evaluation dated January 16, 1996

Local Public Document Room location: Government Publications Section, State Library of Pennsylvania, (REGIONAL DEPOSITORY) Education Building, Walnut Street and Commonwealth Avenue, Box 1601, Harrisburg, Pennsylvania 17105.

Philadelphia Electric Company, Docket No. 50–352, Limerick Generating Station, Unit 1, Montgomery County, Pennsylvania

Date of application for amendment: December 9, 1993, as supplemented by letters dated July 5, September 9, October 19, November 15, and December 2, 1994, January 6, and January 23, 1995.

Brief description of amendment: The amendment changes the Operating License and the corresponding Appendix A to reflect the planned implementation of the Power Rerate Program at the Limerick Generating Station, Unit 1, and the corresponding increase in the authorized maximum reactor core power level by five percent to 3458 megawatts thermal (MWt) from the current limit of 3293 MWt.

Date of issuance: January 24, 1996.

Effective date: As of date of issuance and to be implemented prior to startup in Cycle 7.

Amendment No. 106.

Facility Operating License No. NPF–85. This amendment revised the Technical Specifications and the licensee.

Date of initial notice in Federal Register: February 16, 1994 (59 FR 7695).

The Commission's related evaluation of the amendment is contained in a Safety Evaluation dated January 24, 1996.

No significant hazards consideration comments received: No

Local Public Document Room location: Pottstown Public Library, 500 High Street, Pottstown, Pennsylvania 19464.

Philadelphia Electric Company, Docket Nos. 50–352 and 50–353, Limerick Generating Station, Units 1 and 2, Montgomery County, Pennsylvania

Date of application for amendments: June 20, 1995.

Brief description of amendments: These amendments revise the Technical Specifications to reference 10 CFR Part 50, Appendix J, for the 1) Type A (Integrated Leakage Rate Test), and 2) Drywell-to-Suppression Chamber (bypass) leakage tests instead of providing explicit requirements in the TS.

Date of issuance: January 25, 1996.

Effective date: As of date of issuance, to be implemented within 30 days.

Amendment Nos. 108 and 71.

Facility Operating License Nos. NPF–39 and NPF–85. The amendments revised the Technical Specifications.

Date of initial notice in Federal Register: August 16, 1995 (60 FR 42605).

The Commission's related evaluation of the amendments is contained in a Safety Evaluation dated January 25, 1996.

No significant hazards consideration comments received: No.

Local Public Document Room location: Pottstown Public Library, 500 High Street, Pottstown, Pennsylvania 19464.

Philadelphia Electric Company, Docket Nos. 50–352 and 50–353, Limerick Generating Station, Units 1 and 2, Montgomery County, Pennsylvania

Date of application for amendments: July 28, 1995.

Brief description of amendments: The amendments modify Technical Specifications (TS) Surveillance Requirements 4.9.1.1, 4.9.1.2, 4.9.3, 4.9.5, and 4.9.8 to delete specific requirements to perform surveillances *just prior* to beginning or resuming core alterations or control rod withdrawal associated with refueling activities. The amendments also delete the phrase ''incore instrumentation'' from the footnote in TS Section 3/4.9.5, ''Communication.''

Date of issuance: January 31, 1996.

Effective date: As of its date of issuance, to be implemented within 30 days.

Amendment Nos.: 109 and 72.

Facility Operating License Nos. NPF–39 and NPF–85: The amendments revised the Technical Specifications.

Date of initial notice in Federal Register: September 27, 1995 (60 FR 49943).

The Commission's related evaluation of the amendments is contained in a Safety Evaluation dated January 31, 1996.

No significant hazards consideration comments received: No.

Local Public Document Room location: Pottstown Public Library, 500 High Street, Pottstown, Pennsylvania 19464.

Public Service Electric & Gas Company, Docket No. 50–354, Hope Creek Generating Station, Salem County, New Jersey

Date of application for amendment: December 28, 1995.

Brief description of amendment: This amendment changes Hope Creek Generating Station Technical Specification 1.4, ''Channel Calibration,'' to define actions required for channel calibration of instrument channels containing resistance temperature detector or thermocouple sensors.

Date of issuance: January 25, 1996.

Effective date: As of date of issuance.

Amendment No.: 90.

Facility Operating License No. NPF–57: This amendment revised the Technical Specifications.

Public comments requested as to proposed no significant hazards consideration: Yes (61 FR 420, January 20, 1996). That notice provided an opportunity to submit comments on the Commission's proposed no significant hazards consideration determination. No comments have been received. The notice also provided for an opportunity to request a hearing by February 5, 1996, but indicated that if the Commission makes a final no significant hazards consideration determination any such hearing would take place after issuance of the amendment.

The Commission's related evaluation of the amendment is contained in a Safety Evaluation dated January 25, 1996.

Local Public Document Room location: Pennsville Public Library, 190 S. Broadway, Pennsville, New Jersey 08070.

Public Service Electric & Gas Company, Docket Nos. 50–272 and 50–311, Salem Nuclear Generating Station, Unit Nos. 1 and 2, Salem County, New Jersey

Date of application for amendments: October 11, 1994, as supplemented December 13, 1994, September 6, 1995, and December 28, 1995.

Brief description of amendments: The amendments make two changes to Technical Specification 3/4.4.4 concerning pressurizer heaters. The first change adds the phrase ''capable of being powered from an emergency power supply'' to the Limiting Condition for Operation. The second change alters the frequency of surveillance requirement 4.4.4.2 from 92 days to every refueling outage.

Date of issuance: January 24, 1996.

Effective date: As of date of issuance, to be implemented within 60 days.

Amendment Nos. 179 and 160.

Facility Operating License Nos. DPR–70 and DPR–75: The amendments revised the Technical Specifications.

Date of initial notice in Federal Register: November 23, 1994 (59 FR 60386).

The December 13, 1994, September 6, 1995, and December 28, 1995, letters provided clarifying information that did not change the initial proposed no significant hazards consideration determination.

The Commission's related evaluation of the amendments is contained in a Safety Evaluation dated January 24, 1996.

No significant hazards consideration comments received: No.

Local Public Document Room location: Salem Free Public Library, 112 West Broadway, Salem, New Jersey 08079.

The Cleveland Electric Illuminating Company, Centerior Service Company, Duquesne Light Company, Ohio Edison Company, Pennsylvania Power Company, Toledo Edison Company, Docket No. 50–440, Perry Nuclear Power Plant, Unit No. 1, Lake County, Ohio

Date of application for amendment: May 1, 1995, supplemented December 20, 1995.

Brief description of amendment: The amendment revises the technical specifications to eliminate selected response time testing requirements as described in the Boiling Water Reactor Owners' Group topical report, NEDO–32291, ''System Analyses for Elimination of Selected Response Time Testing Requirements,'' and to incorporate Generic Letter 93–08 guidance regarding relocation of technical specification tables dealing with instrument response time limits.

Date of issuance: January 11, 1996.

Effective date: January 11, 1996, and implemented not later than 90 days after issuance.

Amendment No.: 77.

Facility Operating License No. NPF–58: This amendment revised the Technical Specifications.

Date of initial notice in Federal Register: May 23, 1995 (60 FR 27345).

The Commission's related evaluation of the amendment is contained in a Safety Evaluation dated January 11, 1996.

No significant hazards consideration comments received: No.

Local Public Document Room location: Perry Public Library, 3753 Main Street, Perry, Ohio 44081.

TU Electric Company, Docket Nos. 50–445 and 50–446, Comanche Peak Steam Electric Station, Unit Nos. 1 and 2, Somervell County, Texas

Date of amendment request: January 5, 1996 (TXX–96007).

Brief description of amendments: The amendments were processed as exigent amendments following issuance of a notice of enforcement discretion (NOED) by NRC letter dated January 11, 1996. The NOED and exigent Technical Specification (TS) amendments authorize the licensee to continue operating the Comanche Peak Steam Electric Station, Unit 2 reactor at power with less than the minimum channels operable for Wide Range RCS (Reactor Coolant System) Temp. (Temperature)-T_h remote shutdown indication. The minimum number of channels required is being revised from one per RCS Loop for each RCS Loop to one per RCS Loop for three of the four RCS Loops. These changes are only applicable to CPSES Unit 2 and are being submitted on the CPSES Unit 1 docket for administrative purposes only because the CPSES TSs is a single document which applies to both units.

Date of issuance: February 2, 1996.

Effective date: February 2, 1996.

Amendment Nos.: Unit 1—Amendment No. 45; Unit 2—Amendment No. 31.

Facility Operating License Nos. NPF–87 and NPF–89: The amendments revised the Technical Specifications.

Public comments requested as to proposed significant hazards consideration: Yes (61 FR 1651, dated January 22, 1996). The notice provided an opportunity to submit comments on the Commission's proposed no significant hazards consideration determination. No comments have been received. The notice also provided for an opportunity to request a hearing by February 21, 1996, but stated that any such hearing would take place after issuance of the amendment. The Commission's related evaluation of the amendments, finding of exigent circumstances, and final determination of no significant hazards consideration is contained in a Safety Evaluation dated February 2, 1996.

No significant hazards consideration comments received: No.

Local Public Document Room location: University of Texas at Arlington Library, Government Publications/Maps, 702 College, P.O. Box 19497, Arlington, TX 76019.

Wisconsin Public Service Corporation, Docket No. 50–305, Kewaunee Nuclear Power Plant, Kewaunee County, Wisconsin

Date of application for amendment: October 18, 1995.

Brief description of amendment: The amendment revises Kewaunee Nuclear Power Plant Technical Specification (TS) 3.4, ''Steam and Power Conversion System,'' by modifying and clarifying the operability requirements for the main steam safety valves (MSSVs), the auxiliary feedwater (AFW) System, and the condensate storage tank system. The amendment also eliminates inconsistencies within TS Section 3.4 and provides the basis for acceptable operation of the Auxiliary Feedwater System below 15% reactor power.

Date of issuance: January 3, 1996.

Effective date: January 3, 1996.

Amendment No.: 123.

Facility Operating License No. DPR–43: Amendment revised the Technical Specifications.

Date of initial notice in Federal Register: November 27, 1995 (60 FR 58407).

The Commission's related evaluation of the amendment is contained in a Safety Evaluation dated January 3, 1996.

No significant hazards consideration comments received: No.

Local Public Document Room location: University of Wisconsin, Cofrin Library, 2420 Nicolet Drive, Green Bay, Wisconsin 54311–7001.

Wolf Creek Nuclear Operating Corporation, Docket No. 50–482, Wolf Creek Generating Station, Coffey County, Kansas

Date of amendment request: October 18, 1995.

Brief description of amendment: This amendment replaces the current fuel oil volume requirement in the emergency diesel generator (EDG) day tank in Technical Specifications 3.8.1.1.b.1) and 3.8.1.2.b.1) with a fuel oil level requirement. Associated Surveillance Requirement 4.8.1.1.2.a.1) is also changed to replace the visual check requirement on fuel oil level in the day tank with a requirement to verify that the fuel oil transfer pump starts on low level in the day tank standpipe. The associated Bases section is also revised to reflect the above changes.

Date of issuance: January 19, 1996.

Effective date: January 19, 1996, to be implemented prior to startup from the eighth refueling outage currently scheduled to begin in March 1996.

Amendment No.: 94.

Facility Operating License No. NPF–42. The amendment revised the Technical Specifications.

Date of initial notice in Federal Register: November 27, 1995 (60 FR 58049).

The Commission's related evaluation of the amendment is contained in a Safety Evaluation dated January 19, 1996.

No significant hazards consideration comments received: No.

Local Public Document Room locations: Emporia State University, William Allen White Library, 1200 Commercial Street, Emporia, Kansas 66801 and Washburn University School of Law Library, Topeka, Kansas 66621.

Notice of Issuance of Amendments to Facility Operating Licenses and Final Determination of No Significant Hazards Consideration and Opportunity for a Hearing (Exigent Public Announcement or Emergency Circumstances)

During the period since publication of the last biweekly notice, the Commission has issued the following amendments. The Commission has determined for each of these amendments that the application for the amendment complies with the standards and requirements of the Atomic Energy Act of 1954, as amended (the Act), and the Commission's rules and regulations. The Commission has made appropriate findings as required by the Act and the Commission's rules and regulations in 10 CFR Chapter I, which are set forth in the license amendment.

Because of exigent or emergency circumstances associated with the date the amendment was needed, there was not time for the Commission to publish, for public comment before issuance, its usual 30-day Notice of Consideration of Issuance of Amendment, Proposed No Significant Hazards Consideration Determination, and Opportunity for a Hearing.

For exigent circumstances, the Commission has either issued a Federal Register notice providing opportunity for public comment or has used local media to provide notice to the public in the area surrounding a licensee's facility of the licensee's application and of the Commission's proposed determination of no significant hazards consideration. The Commission has provided a reasonable opportunity for the public to comment, using its best efforts to make available to the public means of communication for the public to respond quickly, and in the case of telephone comments, the comments have been recorded or transcribed as appropriate and the licensee has been informed of the public comments.

In circumstances where failure to act in a timely way would have resulted, for example, in derating or shutdown of a nuclear power plant or in prevention of either resumption of operation or of increase in power output up to the plant's licensed power level, the Commission may not have had an opportunity to provide for public comment on its no significant hazards consideration determination. In such case, the license amendment has been issued without opportunity for comment. If there has been some time for public comment but less than 30 days, the Commission may provide an opportunity for public comment. If comments have been requested, it is so stated. In either event, the State has been consulted by telephone whenever possible.

Under its regulations, the Commission may issue and make an amendment immediately effective, notwithstanding the pendency before it of a request for a hearing from any person, in advance of the holding and completion of any required hearing, where it has determined that no significant hazards consideration is involved.

The Commission has applied the standards of 10 CFR 50.92 and has made a final determination that the amendment involves no significant hazards consideration. The basis for this determination is contained in the documents related to this action. Accordingly, the amendments have been issued and made effective as indicated.

Unless otherwise indicated, the Commission has determined that these amendments satisfy the criteria for categorical exclusion in accordance with 10 CFR 51.22. Therefore, pursuant to 10 CFR 51.22(b), no environmental impact statement or environmental assessment need be prepared for these amendments. If the Commission has prepared an environmental assessment under the special circumstances provision in 10 CFR 51.12(b) and has made a determination based on that assessment, it is so indicated.

For further details with respect to the action see (1) the application for amendment, (2) the amendment to Facility Operating License, and (3) the Commission's related letter, Safety Evaluation and/or Environmental Assessment, as indicated. All of these items are available for public inspection at the Commission's Public Document Room, the Gelman Building, 2120 L Street, NW., Washington, DC, and at the local public document room for the particular facility involved.

The Commission is also offering an opportunity for a hearing with respect to the issuance of the amendment. By March 15, 1996, the licensee may file a request for a hearing with respect to issuance of the amendment to the subject facility operating license and any person whose interest may be affected by this proceeding and who wishes to participate as a party in the proceeding must file a written request for a hearing and a petition for leave to intervene. Requests for a hearing and a petition for leave to intervene shall be filed in accordance with the Commission's ''Rules of Practice for Domestic Licensing Proceedings'' in 10 CFR Part 2. Interested persons should consult a current copy of 10 CFR 2.714 which is available at the Commission's Public Document Room, the Gelman Building, 2120 L Street, NW., Washington, DC and at the local public document room for the particular facility involved. If a request for a hearing or petition for leave to intervene is filed by the above date, the Commission or an Atomic Safety and Licensing Board, designated by the Commission or by the Chairman of the Atomic Safety and Licensing Board Panel, will rule on the request and/or petition; and the Secretary or the designated Atomic Safety and Licensing Board will issue a notice of a hearing or an appropriate order.

As required by 10 CFR 2.714, a petition for leave to intervene shall set forth with particularity the interest of the petitioner in the proceeding, and how that interest may be affected by the results of the proceeding. The petition should specifically explain the reasons why intervention should be permitted with particular reference to the following factors: (1) The nature of the petitioner's right under the Act to be made a party to the proceeding; (2) the nature and extent of the petitioner's property, financial, or other interest in the proceeding; and (3) the possible effect of any order which may be entered in the proceeding on the petitioner's interest. The petition should also identify the specific aspect(s) of the subject matter of the proceeding as to which petitioner wishes to intervene. Any person who has filed a petition for leave to intervene or who has been admitted as a party may amend the petition without requesting leave of the Board up to 15 days prior to the first prehearing conference scheduled in the proceeding, but such an amended petition must satisfy the specificity requirements described above.

Not later than 15 days prior to the first prehearing conference scheduled in the proceeding, a petitioner shall file a supplement to the petition to intervene which must include a list of the contentions which are sought to be litigated in the matter. Each contention must consist of a specific statement of the issue of law or fact to be raised or controverted. In addition, the petitioner shall provide a brief explanation of the bases of the contention and a concise statement of the alleged facts or expert opinion which support the contention and on which the petitioner intends to rely in proving the contention at the hearing. The petitioner must also provide references to those specific sources and documents of which the petitioner is aware and on which the petitioner intends to rely to establish

those facts or expert opinion. Petitioner must provide sufficient information to show that a genuine dispute exists with the applicant on a material issue of law or fact. Contentions shall be limited to matters within the scope of the amendment under consideration. The contention must be one which, if proven, would entitle the petitioner to relief. A petitioner who fails to file such a supplement which satisfies these requirements with respect to at least one contention will not be permitted to participate as a party.

Those permitted to intervene become parties to the proceeding, subject to any limitations in the order granting leave to intervene, and have the opportunity to participate fully in the conduct of the hearing, including the opportunity to present evidence and cross-examine witnesses. Since the Commission has made a final determination that the amendment involves no significant hazards consideration, if a hearing is requested, it will not stay the effectiveness of the amendment. Any hearing held would take place while the amendment is in effect.

A request for a hearing or a petition for leave to intervene must be filed with the Secretary of the Commission, U.S. Nuclear Regulatory Commission, Washington, DC 20555, Attention: Docketing and Services Branch, or may be delivered to the Commission's Public Document Room, the Gelman Building, 2120 L Street, NW., Washington, DC, by the above date. Where petitions are filed during the last 10 days of the notice period, it is requested that the petitioner promptly so inform the Commission by a toll-free telephone call to Western Union at 1-(800) 248–5100 (in Missouri 1-(800) 342–6700). The Western Union operator should be given Datagram Identification Number N1023 and the following message addressed to *(Project Director):* petitioner's name and telephone number, date petition was mailed, plant name, and publication date and page number of this Federal Register notice. A copy of the petition should also be sent to the Office of the General Counsel, U.S. Nuclear Regulatory Commission, Washington, DC 20555, and to the attorney for the licensee.

Nontimely filings of petitions for leave to intervene, amended petitions, supplemental petitions and/or requests for a hearing will not be entertained absent a determination by the Commission, the presiding officer or the Atomic Safety and Licensing Board that the petition and/or request should be granted based upon a balancing of the factors specified in 10 CFR 2.714(a)(1)(i)–(v) and 2.714(d).

The Cleveland Electric Illuminating Company, Centerior Service Company, Duquesne Light Company, Ohio Edison Company, Pennsylvania Power Company, Toledo Edison Company, Docket No. 50–440, Perry Nuclear Power Plant, Unit No. 1, Lake County, Ohio

Date of application for amendment: January 10, 1996.

Brief description of amendment: The amendment granted a one-time extension for surveillances relating to the main steam isolation valve leakage control system, the reactor mode switch and manual scram of the reactor protection system, and the scram discharge vent and drain valves in order for the plant to operate for six more days until its planned shutdown date for refueling outage.

Date of issuance: January 19, 1996.

Effective date: January 19, 1996.

Amendment No.: 78.

Facility Operating License No. NPF–58: This amendment revised the Technical Specifications.

Public comments requested as to proposed no significant hazards consideration: No.

The Commission's related evaluation of the amendment, finding of emergency circumstances, and final determination of no significant hazards consideration are contained in a Safety Evaluation dated January 19, 1996.

Local Public Document Room location: Perry Public Library, 3753 Main Street, Perry, Ohio 44081.

Attorney for licensee: Jay E. Silberg, Shaw, Pittman, Potts & Trowbridge, 2300 N Street, NW., Washington, D.C. 20037.

NRC Project Director: Gail H. Marcus.

Dated at Rockville, Maryland, this 8th day of February 1996.

For the Nuclear Regulatory Commission.

Steven A. Varga,

Director, Division of Reactor Projects—I/II, Office of Nuclear Reactor Regulation.

[FR Doc. 96–3124 Filed 2–13–96; 8:45 am]

BILLING CODE 7590–01–P

SECURITIES AND EXCHANGE COMMISSION

[Release No. 34–36817; File No. SR–OPRA–96–1]

Options Price Reporting Authority; Notice of Filing and Immediate Effectiveness of Amendment to OPRA Fee Schedule Revising the Information Fees Payable by Professional Subscribers to Last Sale and Quotation Information

February 7, 1996.

Pursuant to rule 11Aa3–2 under the Securities Exchange Act of 1934 (''Exchange Act''), notice is hereby given that on January 22, 1996, the Options Price Reporting Authority (''OPRA'') [1] submitted to the Securities and Exchange Commission (''SEC'' or ''Commission'') an amendment to the Plan for Reporting of Consolidated Options Last Sale Reports and Quotation Information (''Plan''). The amendment revises the information fees payable by professional subscribers to last sale and quotation information.[2] OPRA has designated this proposal as establishing or changing a fee or other charge collected on behalf of all of the OPRA participants in connection with access to or use of OPRA facilities, permitting the proposal to become effective upon filing pursuant to Rule 11Aa3–2(c)(3)(i) under the Exchange Act. The Commission is publishing this notice to solicit comments from interested persons on the amendment.

I. Description and Purpose of the Amendment

The purpose of the amendment is to revise the fees payable to OPRA by professional subscribers for access to securities options market data and related information (''OPRA data''), so that a greater share of the costs of

[1] OPRA is a National Market System Plan approved by the Commission pursuant to Section 11A of the Exchange Act and Rule 11Aa3–2 thereunder. Securities Exchange Act Release No. 17638 (Mar. 18, 1981).

The Plan provides for the collection and dissemination of last sale and quotation information on options that are traded on the five member exchanges. The five exchanges which agreed to the OPRA Plan are the American Stock Exchange (''AMEX''); the Chicago Board Options Exchange (''CBOE''); the New York Stock Exchange (''NYSE''); the Pacific Stock Exchange (''PSE''); and the Philadelphia Stock Exchange (''PHLX'').

[2] In September 1995, OPRA previously filed an amendment to revise the fees payable by professional subscribers. *See* Securities Exchange Act Release No. 36364 (October 12, 1995), 60 FR 54093 (October 19, 1995). OPRA subsequently withdrew the proposed amendment on November 22, 1995. *See* Letter from Janet Angstadt, Schiff Hardin & Waite, Attorney for OPRA, to David Oestreicher, Attorney, Division of Market Regulation, SEC (November 22, 1995).

collecting, consolidating, processing and transmitting OPRA data will be covered by these fees.[3] Professional subscribers are those persons that subscribe to OPRA data and do not qualify for the reduced fees charged to nonprofessional subscribers. OPRA's professional subscriber fees were last revised in 1991, implemented over a four year period beginning in January 1992 and ending in January 1995.

The current schedule of professional subscriber fees offers volume discounts to larger subscribers by reducing the fee per device as the total number of devices maintained by a subscriber increases. There are six separate pricing tiers covering the range from One device to 750 or more devices per subscriber. For each tier above the single-device subscriber, a discount is provided to subscribers that are members of one or more of OPRA's participating exchanges.

The proposed amendment retains the concept of a volume discount and retains a member discount.[4] OPRA claims, however, that this proposal is the first step in a program that OPRA intends to implement over several years in order to reduce the number of member and non-member tiers and thereby simplify the administration of the professional subscriber fee for OPRA, its vendors and subscribers.

The changes in the level of OPRA's professional subscriber fees that are being proposed either will reduce or maintain at current levels the fees paid by small professional subscribers having no more than three devices, and will increase the fees paid by professional subscribers having four or more devices.[5] The net result of these changes in professional subscriber fees is estimated to result in an overall increase in professional subscriber fee revenue of approximately 4.75 percent, assuming no changes in the size or distribution of OPRA's total professional subscriber base.

OPRA is proposing these fee changes because, over the four years that have elapsed since the last professional subscriber fee change was authorized in 1991, the exchanges have absorbed increases in the costs of collecting, processing, consolidating and disseminating OPRA data. According to OPRA, the increases largely are due to the implementation of systems and equipment upgrades and additions that have increased the capacity and enhanced the reliability and security of the OPRA system. OPRA anticipates continued escalation of these costs.

OPRA believes that the costs associated with the processing of OPRA data are largely independent of trading volume and, therefore, it has determined that a larger share of such costs should be covered by revenues that also are largely independent of trading volume. OPRA claims that the proposed amendment is intended to achieve this objective, and to allocate market information fees fairly among the different categories of professional subscribers that pay such fees.

II. Solicitation of Comments

Pursuant to Rule 11Aa3–2(c)(3), the amendment is effective upon filing with the Commission. The Commission may summarily abrogate the amendment within 60 days of its filing and require refiling and approval of the amendment by Commission order pursuant to Rule 11Aa3–2(c)(2), if it appears to the Commission that such action is necessary or appropriate in the public interest; for the protection of investors and the maintenance of fair and orderly markets; to remove impediments to, and perfect the mechanisms of, a National Market System; or otherwise in furtherance of the purposes of the Exchange Act.

Interested persons are invited to submit written data, views, and arguments concerning the foregoing. Persons making written submissions should file six copies thereof with the Secretary, Securities and Exchange Commission, 450 Fifth Street, N.W., Washington, D.C. 20549. Copies of the submission, all subsequent amendments, and all written statements with respect to the proposed rule change that are filed with the Commission, and all written communications relating to the proposed rule change between the Commission and any person, other than those withheld from the public in accordance with the provisions of 5 U.S.C. 552, will be available for inspection and copying in the Commission's Public Reference Room. Copies of the filing also will be available at the principal offices of OPRA. All submissions should refer to file number SR–OPRA–96–1 and should be submitted by March 5, 1996.

For the Commission, by the Division of Market Regulation, pursuant to delegated authority.[6]

Margaret H. McFarland,

Deputy Secretary.

[FR Doc. 96–3217 Filed 2–13–96; 8:45 am]

BILLING CODE 8110–01–M

[3] This amendment only applies to OPRA's professional subscriber fees with respect to its basic service, which consists of market data on all listed options other than foreign currency options (''FCOs''). A separate subscriber fee is charged for FCO service. *See* Securities Exchange Act Release No. 36613 (December 30, 1995), 60 FR 67144 (December 28, 1995).

[4] The proposed tiers are as follows: (1) For 1–3 devices, members pay $34.00 per device, and non-members pay $35.00 per device; (2) for 4–9 devices, members pay $23.00 per device, and non-members pay $24.00 per device; (3) for 10–29 devices, members pay $13.65 per device, and non-members pay $15.00 per device; (4) for 30–99 devices, members pay $10.50 per device, and non-members pay $14.50 per device; (5) for 100–749 devices, members pay $10.50 per device, and non-members pay $12.00 per device; and (6) for 750+ devices, members pay $8.40 per device, and non-members pay $10.00 per device.

[5] The increases range from $.40 to $1.00 per device for members and from $1.00 to $3.50 per device for non-members.

[6] 17 CFR 200.30–3(a)(29).

SMALL BUSINESS ADMINISTRATION

Commerce Capital, L.P.; Notice of Filing of an Application for a License To Operate as a Small Business Investment Company

[Application No. 99000175]

Notice is hereby given of the filing of an application with the Small Business Administration (SBA) pursuant to Section 107.102 of the Regulations governing small business investment companies (13 CFR 107.102 (1995)) by Commerce Capital, L.P., at 611 Commerce Street, Stouffer Tower Suite 2723, Nashville, Tennessee 37203 for a license to operate as a small business investment company (SBIC) under the Small Business Investment Act of 1958, as amended, (15 U.S.C. 661 *et seq.*), and the Rules and Regulations promulgated thereunder.

Commerce Capital, L.P., is a Tennessee limited partnership, of which Commerce Equity Capital Corporation is the sole general partner.

The individual General Partners of Commerce Capital, L.P. are Andrew Higgins, Rudy E. Ruark, George M. Garrett and Joe B. Brandon. All four of these individuals have extensive experience in banking, finance, and investment analysis.

Commerce Capital, L.P. will begin operations with committed capital of $3.75 million and will be a source of equity and debt financings for qualified small business concerns.

The following partners will own 10 percent or more of the proposed SBIC:Tennessee Valley Authority, 53%; Columbia/HCA Healthcare Corporation, 26%.

The applicant intends to focus on subordinated debt and equity investments in small to medium size companies across a variety of industries. The applicant seeks to have a diversified portfolio with investments in

companies from serveral industries, with emphasis on companies in manufacturing, health care, environment, and communication and information services industries.

Matters involved in SBA's consideration of the application include the general business reputation and character of the proposed owners and management, and the probability of successful operations of the new company under their management, including profitability and financial soundness in accordance with the Act and Regulations.

Notice is hereby given that any person may, not later than 15 days from the date of publication of this Notice, submit written comments on the proposed SBIC to the Associate Administrator for Investment, Small Business Administration, 409 3rd Street, SW, Washington, DC 20416.

A copy of this Notice will be published in a newspaper of general circulation in Nashville, Tennessee.

(Catalog of Federal Domestic Assistance Programs No. 59.011, Small Business Investment Companies).

Dated: February 7, 1996.

Don A. Christensen,

Associate Administrator for Investment.

[FR Doc. 96–3215 Filed 2–13–96; 8:45 am]

BILLING CODE 8025–01–P

Societe Generale Capital Corporation; Notice of Filing of an Application for a License To Operate as a Small Business Investment Company

[Application No. 99000195]

Notice is hereby given of the filing of an application with the Small Business Administration (SBA) pursuant to Section 107.102 of the Regulations governing small business investment companies (13 CFR 107.102 (1996)) by Societe Generale Capital Corporation at 1221 Avenue of the Americas, 8th Floor, New York, New York 10020 for a license to operate as a non-leveraged small business investment company (SBIC) under the Small Business Investment Act of 1958, as amended, (15 U.S.C. *et seq.*), and the Rules and Regulations promulgated thereunder.

The Applicant plans to make investments throughout the United States in small businesses with experienced management teams and credible strategies for growth and success. It is anticipated that approximately 50% of the Applicant's investments will be in the form of equity (including common and preferred stock), and 50% in mezzanine debt which may be convertible or come with warrants or other equity participation rights. The Applicant plans to begin operations with Regulatory Capital of $5 million.

Societe Generale Capital Holding Corporation will own 100% of the Common Stock of the Applicant. Societe Generale Capital Holding Corporation is a wholly-owned subsidiary of Societe Generale, one of the largest and most respected banking institutions in the world. Societe Generale operates as a conventional full-service bank in France through a network of 2,000 branches. Outside France, it is present in more than 500 offices in nearly 70 countries. The officers and directors of the Applicant are Steven A. Baronoff, President & CEO; Matthew B. Judson, Vice President & Treasurer; and Eric L. Hirschfield, Vice President & Secretary. These three investment professionals have extensive experience in investing in and advising both small and large businesses.

Matters involved in SBA's consideration of the application include the general business reputation and character of the proposed owners and management, and the probability of successful operations of the new company under their management, including profitability and financial soundness in accordance with the Act and Regulations.

Notice is hereby given that any person may, not later than 15 days from the date of publication of this Notice, submit written comments on the proposed SBIC to the Associate Administrator for Investment, Small Business Administration, 409 3rd Street, SW, Washington, DC 20416.

A copy of this Notice will be published in a newspaper of general circulation in New York, New York.

(Catalog of Federal Domestic Assistance Programs No. 59.011, Small Business Investment Companies).

Dated: Wednesday, February 7, 1996.

Don A. Christensen,

Associate Administrator for Investment.

[FR Doc. 96–3216 Filed 2–13–96; 8:45 am]

BILLING CODE 8025–01–P

DEPARTMENT OF TRANSPORTATION

Coast Guard

[CGD02–96–002]

Second Coast Guard District Industry Day

AGENCY: Coast Guard, DOT.

ACTION: Notice of Meeting.

SUMMARY: The Commander, Second Coast Guard District is sponsoring an Industry Day event in St. Louis, Missouri. This notice advertises the event which is open to the public.

DATES: Industry Day will be held on March 18, 1996 from 8:30 a.m. to 4:30 p.m. Registration forms and fees must be received by March 1, 1996.

ADDRESSES: Please forward your registration forms to: St. Louis Airport Marriott, Attn: Sales Office, c/o Mimi Patterson, I–70 at Lambert International Airport, St. Louis, Missouri 63134. Industry Day activities will be held at the St. Louis Airport Marriott, I–70 at Lambert International Airport, St. Louis, Missouri.

FOR FURTHER INFORMATION CONTACT: Lieutenant Amy B. Kritz or Lieutenant Commander Patrick G. Gerrity, Commander (mpb), Second Coast Guard District, 1222 Spruce Street, Room 2.102G, St. Louis, Missouri 63103–2832. The telephone number is: (314) 539–3900 (Ext. 268/263).

SUPPLEMENTARY INFORMATION: Industry Day is designed to provide an open exchange of information, ideas and opinions on matters of mutual interest or concern to the inland marine community and the Coast Guard. Industry Day activities will be held at the St. Louis Airport Marriott. The schedule of events follows:

Sunday, 17 March

- 5:00–7:00 p.m. Registration for early arrivals.

Monday, 18 March

- 7:30 a.m. Registration continues.
- 8:30 a.m. General Session: Opening comments and Keynote Address.
- 10:35 a.m. Panel Discussions: Two separate small group panels will focus on issues unique to the Towing Industry and Passenger Vessels.
- 12:00 p.m. Luncheon Program.
- 1:20 p.m. General Session focusing on various topics of general interest.
- 3:20 p.m. Panel Discussions: Three separate panels will focus on Safety and Occupational Health issues, Waterways Management issues and Environmental Compliance issues.
- 4:30 p.m. Open Forum for audience questions.
- 5:30 p.m. Industry Day concludes.

Advance registration and payment of a $27.00 conference fee is required. The fee includes the luncheon and refreshments.

Persons interested in attending Industry Day may request registration forms or additional information on Industry Day activities and on events scheduled by other groups to coincide with Industry Day at the address provided above. Persons interested in submitting written recommendations for

agenda discussion topics should mail their recommendations directly to Commander (mpb), also at the address provided above.

Completed registration forms and fees should be mailed directly to the address above.

Dated February 5, 1996.

Paul M. Blayney,

Rear Admiral, United States Coast Guard, Commander, Second Coast Guard District.

[FR Doc. 96–3252 Filed 2–13–96; 8:45 am]

BILLING CODE 4910–14–M

Office of the Secretary, Office of Aviation Analysis

Notice of Request for Extension and Revision of a Currently Approved Information Collection

AGENCY: Office of the Secretary, DOT.

ACTION: Notice and request for comments.

SUMMARY: In accordance with the Paperwork Reduction Act of 1995 (44 U.S.C. Chapter 35, as amended) this notice announces the Department of Transportation's (DOT) intention to request an extension for and revision to a currently approved information collection.

DATES: Comments on this notice must be received by April 15, 1996.

ADDRESSES: Comments should be sent to the Special Authorities Division (X–57), Office of Aviation Analysis, Office of the Secretary, U.S. Department of Transportation, 400 7th Street, S.W., Washington, DC 20590–0002.

FOR FURTHER INFORMATION CONTACT: Mr. Scott Keller or Mr. Charles McGuire, Office of the Secretary, Office of Aviation Analysis, X–57, Department of Transportation, at the address above. Telephone: (202) 366–1031/4534.

SUPPLEMENTARY INFORMATION:

Title: Exemptions For Air Taxi and Commuter Air Carrier Operations.

OMB Control Number: 2106–0031.

Expiration Date: March 31, 1996.

Type of Request: Extension for and revision to a currently approved information collection.

Abstract: In 14 CFR Part 298 of its Economic Regulations the Department established two classifications of air carriers known as air taxi operators and commuter air carriers. The latter are air taxi operators that also offer scheduled passenger service. Generally, these carriers are small businesses and operate only aircraft of limited size. In Part 298 the Department has exempted these carriers from certain requirements of Chapter 411 of Title 49 of the United States Code to permit them to obtain operating authority by filing a single-sheet informational form, and otherwise complying with the provisions of Part 298. If this exemption did not exist these carriers would be required to formally seek operating authority by the lengthy and more costly process of applying for an operating certificate under Chapter 411.

The collection involved here requests only general information about a carrier. This information includes a list of the aircraft the carrier intends to use in its business. This list enables the Department to assure that liability insurance exists for these aircraft and, from a safety standpoint, it alerts the Federal Aviation Administration as to which of the carrier's aircraft must undergo an air taxi airworthiness examination. The collection is also used by the Department to protect the competitive interests of the air taxis. For example, each carrier is required to provide citizenship information in order that the Department can assure that the company qualifies as a U.S. citizen under Chapter 401 of the United States Code.

Respondents: Small air carriers operating aircraft with 60 seats or less or 18,000 pounds payload or less.

Estimated Number of Respondents: 2,119.

Average Annual Burden per Respondent: 30 minutes.

Estimated Total Burden on Respondents: 1,060 hours.

This information collection is available for inspection at the Special Authorities Division (X–57), Office of Aviation Analysis, DOT, at the address above. Copies of 14 CFR Part 298 can be obtained from Mr. Scott Keller at the address and telephone number shown above.

Comments are Invited on: (a) Whether the proposed collection of information is necessary for the proper performance of the functions of the Department, including whether the information will have practical utility; (b) the accuracy of the Department's estimate of the burden of the proposed information collection; (c) ways to enhance the quality, utility and clarity of the information to be collected; and (d) ways to minimize the burden of the collection of information on respondents, including the use of automated collection techniques or other forms of information technology.

All responses to this notice will be summarized and included in the request for OMB approval. All comments will also become a matter of public record.

Issued in Washington, DC on February 5, 1996.

John V. Coleman,

Office of Aviation Analysis.

[FR Doc. 96–3004 Filed 2–13–96; 8:45 am]

BILLING CODE 4910–62–P

Federal Aviation Administration

Availability of Solicitation for Center of Excellence (COE) in Operations Research

AGENCY: Federal Aviation Administration (FAA), DOT.

ACTION: Notice of availability.

SUMMARY: The FAA is soliciting competitive proposals from academic institutions to form an aviation operations research Center of Excellence (COE). The COE will be a consortium consisting of the FAA, universities, airlines, and other private industry to work collectively on business and operational issues of mutual interest and concern.

DATES: The closing date for submitting final proposals is April 15, 1996.

ADDRESSES: Solicitation packages may be obtained by contacting the COE Program Office. Contact Ms. Patricia Watts or Mr. David Nesterok, Office of Research and Technology Applications, AAR, Building 270, Atlantic City International Airport, New Jersey, 08405, Fax Number (609) 485–6509.

SUPPLEMENTARY INFORMATION: The FAA intends to award a grant to establish a Center of Excellence in Operations Research to a qualified college university, or to a team of such institutions.

The FAA has identified a need for a Center of Excellence in aviation operations research. The need was determined by surveying the aviation transportation community. This survey identified a series of functional areas that best represent the concerns of a broad spectrum of aviation transportation users. Accordingly, the Center will conduct basic research in the following seven functional areas:

1. Air Traffic Control
2. Human-in-the-Loop Systems
3. System Performance and Assessment Measures
4. Flow Control, Scheduling, and Work Load Distribution
5. Operations Research and Simulation ''Tool kit'' Enhancements
6. Inter and Intra Governmental Communication, and Communications among FAA and Airspace Users
7. Navigation, Communication, and Data Transfer

Eligibility

Colleges and universities are eligible for continuing grants to establish a Center of Excellence in Operations Research. The FAA is seeking to ensure an equitable geographical distribution of funds and to encourage the inclusion of minority institutions.

Matching Funds Requirement

A Center of Excellence receives funding annually in the form of single or multiple continuing research grants over a three-year period. The federal government provides 50 percent of the cost to establish and operate a Center of Excellence. The institution must show a continuing source of non-Federal matching funds available for the remaining research and operational expenses at the Center. Once the COE is established, a fiscal report declaring the sources and amount of funding and expenditures must be submitted for review every six (6) months to The Office of Research and Technology Applications at the FAA Technical Center. A full review and grant close-out takes place at the conclusion of each three-year phase.

The Center of Excellence and the agency shall agree upon the maximum expected costs in each fiscal year. Any cost incurred in excess of the maximum costs agreed upon with the agency shall be the sole obligation of the Center of Excellence.

The Center of Excellence is expected to account for all funds granted and matched, utilized to establish, operate, and conduct the specified research activities of the Center of Excellence.

Maintenance of Effort and Center Operations

The Center of Excellence is required to maintain its aggregate expenditures from all other sources for establishing and operating the Center of Excellence and related research activities at or above the average level of such expenditures in its two (2) fiscal years preceding November 5, 1990. The establishment of a Center of Excellence is intended to augment the level of aviation research activities at the institution.

The Center of Excellence shall maintain a close working relationship with the corresponding agency research program office. This relationship shall extend to participation in conferences, meetings, joint research efforts, and submission of significant activity reports to the FAA on a routine basis. The COE shall prepare quarterly and semi-annual reports, and a fully inclusive annual report on research projects and fiscal expenditures, and shall host an on-site review of all research activities.

The FAA may require the COE to hold an annual joint symposium with the agency on topics relating to the status and results of the designated technology area. Researchers at the COE may serve as consultants by providing technical advice to the sponsoring agency program office. They may also be asked to participate on major planning and investigative committees related to operations research.

The COE will be selected on the basis of the following criteria mandated by Congress:

—The extent to which the needs of the State in which the applicant is located are representative of the needs of the region for improved air transportation services and facilities.
—The demonstrated research and extension resources available to the applicant for carrying out the intent of the legislation.
—The capability of the applicant to provide leadership in making national and regional contributions to the solution of both long-range and immediate air transportation problems.
—The extent to which the applicant has an established air transportation program.
—The demonstrated ability of the applicant to disseminate results of air transportation research and educational programs through a statewide or region-wide continuing education program.
—The research projects that the applicant proposes to carry out under the grant.

Research Area

The COE is envisioned as a source of exceptional expertise in aviation operations research. We anticipate the COE will attract interest from other organizations such as the airline industry, other industrial groups, and governmental entities to solve unique and difficult aviation transportation problems. These other organizations may contribute funding to the COE. This work will require members of the COE to carry out sophisticated research on contemporary aviation transportation issues as noted in the seven functional areas. The functional areas are intended to give applicants a fee for the complexity and scope of work that *may* be required of the COE. Typical research areas may include, but are not limited to, issues such as free flight, airport or airspace capacity, controller workload, threat modeling, program analysis, risk assessment, and resource allocation. The COE may anticipate that work will not be required in all functional areas at the same time. Nevertheless the COE must anticipate that, over the life of the COE, work may be required in any of these functional areas from time to time. The COE should thus develop a plan that anticipates being able to do work in each of these functional areas as the COE matures and attracts more business. This philosophy reflects the FAA's vision of the DOE as a long-term, consistent, dependable source for tackling aviation operations research issues.

Who May Apply

1. Colleges and universities may submit proposals for continuing grant awards to establish and operate the Center of Excellence in Operations Research.

2. Individuals are not eligible for a COE designation and do not qualify for grants under this programs.

3. Before final proposal submission, the proposal may be discussed with the Center of Excellence Program Manager, Ms. Patricia Watts, or the Program Technical Advisor, David Nesterok, at (609) 485–5043/(609) 485–4042, or Fax (609) 485–6509.

Award Date

The final selection of the Center of Excellence in Operations Research will be announced by the Administrator within this fiscal year.

Issued in Atlantic County, New Jersey on February 7, 1996.

Andres Zellweger,

Director, Office of Aviation Research, AAR–1.

[FR Doc. 96–3295 Filed 2–13–96; 8:45 am]

BILLING CODE 4910–13–M

Federal Aviation Administration

Notice of Intent To Distribute and Request Comment on the National Airspace System (NAS) Architecture, Version 1.5

AGENCY: Federal Aviation Administration (FAA), DOT.

ACTION: Distribute and Request Comment on the NAS Architecture, Version 1.5.

SUMMARY: The FAA Office of System Architecture and Program Evaluation has developed a working version of the NAS Architecture. This working draft version of the architecture, Version 1.5, has not been formally coordinated with

all segments of the FAA. It is, however, sufficiently mature to warrant review by the broader aviation community. The FAA, therefore, invites public comment.

DATES: Comments must be received on or by May 15, 1996.

ADDRESS: Comments may be sent by facsimile to 202–484–1257 or by mail to: NAS Documentation Control Center, ATTN: K. Faison, Suite 700, 1250 Maryland Ave., SW., Washington, DC 20024.

SUPPLEMENTARY INFORMATION: The FAA Office of System Architecture and Program Evaluation invites public comment on a working draft version of the NAS Architecture, which it has developed.

The NAS is one of the most complex human constructed systems in the world. It comprises thousands of people, both within and outside of government, and billions of dollars of investment in aircraft and operations-related facilities and equipment. Our aviation system generates a substantial positive impact on the overall U.S. balance of payments.

Current efforts to balance the Federal budget dictate that the FAA role in supporting U.S. aviation, primarily in providing air traffic control services, be performed more efficiently and, perhaps, in a dramatically different way than in the past. To assist us in this reengineering effort, and in defining new ways of sharing the myriad responsibilities associated with operating the system safely, we have developed this initial, comprehensive NAS architecture. By taking this broad, all-encompassing view of the system, we hope to find possibilities for providing the same or better service while minimizing the necessary capital investment and the costs of operation.

The system architecture is contained in a relational data base and is available on compact disk (CD–ROM). It can be obtained free of charge by telephoning 202–776–1256, or by writing to: AMTECH, Inc., 1101 15th St., NW., Suite 900, ATTN: IADB Product Lead, Washington, DC 20005. Requests also may be made via facsimile at 202–452–0699. Orders will be filled on a first-come, first-served basis.

The CD can be run only on PC–DOS computers running Windows 3.1 or higher. It has been tested on a computer with a quad speed CD–ROM player, 486 microprocessor, 8 MB of random access memory, 10 MB available hard disk space, and a 256-color VGA display. It may be run on machines with lesser performance, in particular 16-color VGA displays, but this is not recommended.

A comment form is provided on the CD which can be printed, filled out, and returned to the FAA. The FAA encourages comments. While the FAA cannot guarantee a response to each and every comment received, each that is received by May 15, 1996, will be considered in developing the next version of the system architecture.

Issued in Washington, DC, on February 8, 1996.

Terry R. Hannah,

Deputy Director, Office of System Architecture and Program Evaluation, Designated Official.

[FR Doc. 96–3294 Filed 2–13–96; 8:45 am]

BILLING CODE 4910–13–M

Notice of Intent To Rule on Application To Use the Revenue From a Passenger Facility Charge (PFC) at Memphis International Airport, Memphis, TN

AGENCY: Federal Aviation Administration (FAA), DOT.

ACTION: Notice of intent to rule on application.

SUMMARY: The FAA proposes to rule and invites public comment on the application to use the revenue from a PFC at Memphis International Airport under the provisions of the Aviation Safety and Capacity Expansion Act of 1990 (Title IX of the Omnibus Budget Reconciliation Act of 1990) (Public Law 101–508) and Part 158 of the Federal Aviation Regulations (14 CFR Part 158).

DATES: Comments must be received on or before March 15, 1996.

ADDRESSES: Comments on this application may be mailed or delivered in triplicate to the FAA at the following address: Memphis Airports District Office, 2851 Directors Cove, Suite #3, Memphis, Tennessee 38131–0301.

In addition, one copy of any comments submitted to the FAA must be mailed or delivered to Mr. Larry D. Cox, President of the Memphis-Shelby County Airport Authority at the following address: Memphis-Shelby County Airport Authority, 2491 Winchester Road, Memphis, Tennessee 38116.

Air carriers and foreign air carriers may submit copies of written comments previously provided to the Memphis-Shelby County Airport Authority under section 158.23 of Part 158.

FOR FURTHER INFORMATION CONTACT: Mr. Jerry O. Bowers, Planner, Memphis Airports District office, 2851 Directors Cove, Suite #3, Memphis, Tennessee 38131–0301; telephone number 901–544–3495. The application may be reviewed in person at this location.

SUPPLEMENTARY INFORMATION: The FAA proposes to rule and invites public comment on the application to use the revenue from a PFC at Memphis International Airport under provisions of the Aviation Safety and Capacity Expansion Act of 1990 (Title IX of the Omnibus Budget Reconciliation Act of 1990) (Public Law 101–508) and Part 158 of the Federal Aviation Regulations (14 CFR Part 158).

On February 7, 1996, the FAA determined that the application to use the revenue from a PFC submitted by Memphis-Shelby County Airport Authority was substantially complete within the requirements of section 158.25 of Part 158. The FAA will approve or disapprove the application, in whole or in part, no later than May 8, 1996.

The following is a brief overview of the application.

PFC application number: 95–03–U–00–MEM.

Level of the approved PFC: $3.00.

Actual charge effective date: August 1, 1992.

Estimated charge expiration date: March 1, 2005.

Total estimated PFC revenue to be collected at this airport: $147,253,000.

Total estimated PFC revenue to be used on projects in this application: $85,954,000.

Brief description of proposed project: Reconstruct and Extend Runway 18L–36R.

Class or classes of air carriers which the public agency has requested not be required to collect PFCs: A. On demand air taxi-commercial operators that do not enplane passengers at the Airport's main passenger terminal buildings, and B. Any carrier that enplanes less than 500 passengers per year at the Airport.

Any person may inspect the application in person at the FAA office listed above under **FOR FURTHER INFORMATION CONTACT**.

In addition, any person may, upon request, inspect the application, notice and other documents germane to the application in person at the Memphis-Shelby County Airport Authority.

Issued in Memphis, Tennessee on February 7, 1996.

LaVerne F. Reid,

Manager, Memphis Airports District Office.

[FR Doc. 96–3298 Filed 2–13–96; 8:45 am]

BILLING CODE 4910–13–M

Notice of Intent To Rule on Request To Amend an Approved Application To Impose and Use the Revenue From a Passenger Facility Charge (PFC) at Memphis International Airport, Memphis, Tennessee

AGENCY: Federal Aviation Administration (FAA), DOT.

ACTION: Notice of intent to rule on a request to amend an approved PFC application.

SUMMARY: The FAA proposes to rule and invites public comment on the request to amend the approved application to impose and use the revenue from a PFC at Memphis International Airport under the provisions of the Aviation Safety and Capacity Expansion Act of 1990 (Title IX of the Omnibus Budget Reconciliation Act of 1990) (Public Law 101–508) and Part 158 of the Federal Aviation Regulations (14 CFR Part 158).

DATES: Comments must be received on or before March 15, 1996.

ADDRESSES: Comments on this request may be mailed or delivered in triplicate to the FAA at the following address: Memphis Airports District Office, 2851 Directors Cove, Suite #3, Memphis, Tennessee 38131–0301.

In addition, one copy of any comments submitted to the FAA must be mailed or delivered to Mr. Larry D. Cox, President of the Memphis-Shelby County Airport Authority at the following address: Memphis-Shelby County Airport Authority, 2491 Winchester Road, Memphis, Tennessee 38116.

Air carriers and foreign air carriers may submit copies of written comments previously provided to Memphis-Shelby County Airport Authority under section 158.37(b) of Part 158.

FOR FURTHER INFORMATION CONTACT: Mr. Jerry O. Bowers, Planner, Memphis Airports District Office, 2851 Directors Cove, Suite #3, Memphis, Tennessee 38131–0301; telephone number 901–544–3495. The request may be reviewed in person at this location.

SUPPLEMENTARY INFORMATION: The FAA proposes to rule and invites public comment on the request to amend the application to impose and use the revenue from a PFC at Memphis International Airport under provisions of the Aviation Safety and Capacity Expansion Act of 1990 (Title IX of the Omnibus Budget Reconciliation Act of 1990) (Pub. L. 101–508) and Part 158 of the Federal Aviations Regulations (14 CFR Part 158).

On January 9, 1996, the FAA received a request to amend the application to impose and use the revenue from a PFC submitted by Memphis-Shelby County Airport Authority within the requirements of section 158.37(b) of Part 158. The FAA will approve or disapprove the amendment no later than May 8, 1996.

The following is a brief overview of the request.

PFC amendment number: 93–02–C–01–MEM.

Proposed increase in total estimated PFC revenue: From $50,026,000 to $52,789,000.

Any person may inspect the request in person at the FAA office listed above under **FOR FURTHER INFORMATION CONTACT.**

In addition, any person may, upon request, inspect the request, notice and other documents germane to the request in person at the Memphis-Shelby County Airport Authority.

Issued in Memphis, Tennessee on February 7, 1996.

LaVerne F. Reid,

Manager, Memphis Airports District Office.

[FR Doc. 96–3297 Filed 2–13–96; 8:45 am]

BILLING CODE 4910–13–M

Notice of Intent To Rule on Application To Impose and Use the Revenue From a Passenger Facility Charge (PFC) at Memphis International Airport, Memphis, Tennessee

AGENCY: Federal Aviation Administration (FAA), DOT.

ACTION: Notice of intent to rule on application.

SUMMARY: The FAA proposes to rule and invites public comment on the application to impose and use the revenue from a PFC at Memphis International Airport under the provisions of the Aviation Safety and Capacity Expansion Act of 1990 (Title IX of the Omnibus Budget Reconciliation Act of 1990) (Pub. L. 101–508) and Part 158 of the Federal Aviation Regulations (14 CFR Part 158).

DATES: Comments must be received on or before March 15, 1996.

ADDRESSES: Comments on this application may be mailed or delivered in triplicate to the FAA at the following address: Memphis Airports District Office, 2851 Directors Cove, Suite #3, Memphis, Tennessee 38131–0301.

In addition, one copy of any comments submitted to the FAA must be mailed or delivered to Mr. Larry D. Cox, President of the Memphis-Shelby County Airport Authority at the following address: Memphis-Shelby County Airport Authority, 2491 Winchester Road, Memphis, Tennessee 38116.

Air carriers and foreign air carriers may submit copies of written comments previously provided to the Memphis-Shelby County Airport Authority under section 158.23 of Part 158.

FOR FURTHER INFORMATION CONTACT: Mr. Jerry O. Bowers, Planner, Memphis Airports District Office, 2851 Directors Cove, Suite #3, Memphis, Tennessee 38131–0301; telephone number 901–544–3495. The application may be reviewed in person at this location.

SUPPLEMENTARY INFORMATION: The FAA proposes to rule and invites public comment on the application to impose and use the revenue from a PFC at Memphis International Airport under provisions of the Aviation Safety and Capacity Expansion Act of 1990 (Title IX of the Omnibus Budget Reconciliation Act of 1990) (Public Law 101–508) and part 158 of the Federal Aviation Regulations (14 CFR Part 158).

On February 7, 1996, the FAA determined that the application to impose and use the revenue from a PFC submitted by Memphis-Shelby County Airport Authority was substantially complete within the requirements of section 158.25 of Part 158. The FAA will approve or disapprove the application, in whole or in part, no later than May 8, 1996.

The following is a brief overview of the application.

PFC application number: 96–04–C–00–MEM.

Level of the proposed PFC: $3.00.

Proposed charge effective date: December 1, 2003.

Proposed charge expiration date: March 1, 2005.

Total estimated PFC revenue to be collected at this airport: $147,253,000.

Total estimated PFC revenue to be collected and used for projects in this application: $15,847,000.

Brief description of proposed project(s): Rehabilitate Taxiway ''N'' (November).

Joint Seal and Slab Replacement Taxiway ''M'' (Mike) and Runway 18R–36L Class or classes of air carriers which the public agency has requested not be required to collect PFCs: A. On demand air taxi-commercial operators that do not enplane passengers at the Airport's main passenger terminal buildings, and B. Any carrier that enplanes less than 500 passengers per year at the Airport.

Any person may inspect the application in person at the FAA office listed above under ''FOR FURTHER INFORMATION CONTACT''.

In addition, any person may, upon request, inspect the application, notice and other documents germane to the application in person at the Memphis-Shelby County Airport Authority.

Issued in Memphis, Tennessee on February 7, 1996.

LaVerne F. Reid,

Manager, Memphis Airports District Office.

[FR Doc. 96–3296 Filed 2–13–96; 8:45 am]

BILLING CODE 4910–13–M

Maritime Administration

[Docket S–932]

OMI Courier Transport, Inc.; OMI Patriot Transport, Inc.; OMI Rover Transport, Inc.; Notice of Application for Extension of the Subsidizable Life of the Patriot, Ranger, and Courier and for Extension or Renewal of Operating-Differential Subsidy Agreements, MA/MSB–167(a), (b), and (c) Using Unused Subsidy Days

By application dated January 31, 1996, OMI Courier Transport, Inc.; OMI Patriot Transport, Inc.; and OMI Rover Transport, Inc. (OMI subsidiaries), recipients of operating-differential subsidy (ODS) pursuant to Operating-Differential Subsidy Agreements (ODSA), MA/MSB–167(a), (b), (c), and (d) request: (1) The extension of the subsidizable life of the Patriot, Ranger, and Courier to the termination date of MA/MSB–167(d) on January 28, 1997, and (2) extension or renewal of ODSAs MA/MSB–167(a), (b), and (c) to permit the OMI subsidiaries to use unused subsidy days for the duration of the period through the termination of MA/MSB–167(d) on January 28, 1997.

The OMI subsidiaries advise that their first request is to extend the subsidizable life of the Patriot, Ranger, and Courier in order to permit these vessels to remain in U.S.-flag service to the fullest extent possible.

The OMI subsidiaries advise that their second request modifies their request of November 15, 1995, to extend or renew the ODSAs sufficiently to permit the full use of the OMI subsidiaries' unused subsidy days. This modification would permit the OMI subsidiaries to use unused subsidy days until the termination of MA/MSB–167(d). The OMI subsidiaries state that their request of November 15, 1995, to use the total number of unused subsidy days remains pending, but in the meantime approval of the more limited request would permit the OMI subsidiaries to plan for the continued operation of these vessels in U.S. flag service for at least another year. The OMI subsidiaries advise that permitting the use of unused subsidy days would preclude the need to establish a subsidy sharing arrangement among the four product tankers listed in the ODSAs and permit each vessel to take full advantage of any available U.S.-flag market opportunity.

The OMI subsidiaries advise that maintaining the opportunity for these vessels to continue operation in the U.S. merchant marine for the full extent of periods for which OMI subsidiaries can receive ODS would further the purposes and policies of the Merchant Marine Act, 1936, as amended, and help assure employment for U.S. seafarers for this period of time.

This application may be inspected in the Office of the Secretary, Maritime Administration. Any person, firm or corporation having any interest in such request and desiring to submit comments concerning the application must file written comments in triplicate with the Secretary, Maritime Administration, Room 7210, Nassif Building, 400 Seventh Street SW., Washington D.C. 20590. Comments must be received no later than 5:00 p.m. on February 27, 1996. The Maritime Subsidy Board will consider any comments submitted and take such action with respect thereto as may be deemed appropriate.

(Catalog of Federal Domestic Assistance Program No. 2.804 Operating-Differential Subsidies)

By Order of the Maritime Subsidy Board.

Dated: February 8, 1996.

Joel C. Richard,

Secretary.

[FR Doc. 96–3257 Filed 2–13–96; 8:45 am]

BILLING CODE 4910–81–P

Research and Special Programs Administration

Control of Drug Use and Alcohol Misuse in Natural Gas, Liquefied Natural Gas, and Hazardous Liquid Pipeline Operations Alcohol Misuse Prevention Program

ACTION: Notice of Management Information System (MIS) Statistical Data.

SUMMARY: The RSPA has received and evaluated the 1994 Management Information System (MIS) Data Collection forms for the drug testing of pipeline personnel, the first year for collecting such data. The RSPA has determined that the random positive drug testing rate for pipeline industry for the period of January 1, 1994, through December 31, 1994, is 0.8 percent. Since two years of data are required to change the random rate it will remain at 50 percent for 1996.

FOR FURTHER INFORMATION CONTACT: Ms. Catrina M. Pavlik, Office of Pipeline Safety, Compliance and State Programs, (DPS–23), Research and Special Programs Administration, 400 7th Street, SW., Washington, DC 20590; telephone (202) 366–6199.

SUPPLEMENTARY INFORMATION: In a final rule published on December 23, 1993 (57 FR 59720), the RSPA announced that it would require operators of gas, hazardous liquid and carbon dioxide pipelines and liquefied natural gas (LNG) facilities who are subject to 49 CFR parts 192, 193 and 195 to implement, maintain, and submit an annual report for their drug testing program data. Any operator with 51 or more covered employees had to submit this information on an annual basis. Operators with 50 or fewer covered employees had to maintain this information, and RSPA randomly selected 100 operators in this category to submit their data. The final rule was essential for RSPA to collect the drug testing statistical data and use the data to analyze its current approach to deterring and detecting illegal drug abuse in the pipeline industry, and, as appropriate, plan a more efficient and effective approach. The data collected in 1994, which was the first year that the data was collected, showed that the random positive drug testing rate was 0.8 percent. The data will continue to be collected in the future. Once RSPA has received two consecutive years of MIS Data Collection forms where the positive random testing rate is less than 1 percent industry-wide, then the RSPA Administrator may reduce the random testing rate to 25 percent.

Submission of MIS reports is due to the Office of Pipeline Safety, Research and Special Programs Administration, DPS–23, Room 2335, 400 7th Street SW., Washington, DC 20590 not later than March 15 of each calendar year. Notice of statistical data will be published in the future to report the results of each calendar year's MIS Data Collection. The RSPA will also publish at that time whether or not the random rate will be reduced or increased for the pipeline industry.

Issued in Washington, DC on February 9, 1996.

Richard B. Felder,

Associate Administrator for Office of Pipeline Safety.

[FR Doc. 96–3304 Filed 2–13–96; 8:45 am]

BILLING CODE 4910–60–M

DEPARTMNET OF TRANSPORTATION

Surface Transportation Board

[STB Ex Parte No. 533]

FEDERAL MARITIME COMMISSION

[Docket No. 96–04]

Noncontiguous Domestic Trade Tariffs

AGENCIES: Surface Transportation Board, Department of Transportation; Federal Maritime Commission.

ACTION: Request for Comments.

SUMMARY: The Surface Transportation Board (STB or Board) and the Federal Maritime Commission (FMC or Commission) seek comments on how best to implement the provisions of the ICC Termination Act of 1995 involving tariff filing and rate reasonableness in the noncontiguous domestic trade (49 U.S.C. 13701 and 13702).[1]

DATES: Comments are due on March 11, 1996. Replies are due on March 25, 1996.

ADDRESSES: Participants must send an original and 10 copies of their comments, referring to STB Ex Parte No. 533/FMC Docket No. 96-04 to: Office of the Secretary, Case Control Branch, Surface Transportation Board, 1201 Constitution Ave., N.W., Washington, DC 20423, and 10 copies to Secretary, Federal Maritime Commission, 800 N. Capitol St., N.W., Washington, DC 20573.

FOR FURTHER INFORMATION CONTACT: Craig Keats, Office of the General Counsel, STB, (202) 927-6046 or C. Douglass Miller, Office of the General Counsel, FMC, (202) 523-5740. [TDD for the hearing impaired: (202) 927-5721.]

SUPPLEMENTARY INFORMATION: The ICC Termination Act of 1995, Public Law 104–88, 109 Stat. 803 (ICC Termination Act), abolished the Interstate Commerce Commission (ICC). The Act assigned responsibility over certain functions formerly handled by the ICC to either the Secretary of Transportation or the newly-established STB. Section 2 of the ICC Termination Act states that: ''Except as otherwise provided in this Act, this Act shall take effect on January 1, 1996.''

Historically, the Interstate Commerce Act and the laws administered by the FMC gave both agencies jurisdiction over operations in the ''domestic offshore trade'' (also referred to as the ''noncontiguous domestic trade''). The ICC, under 49 U.S.C. 10521, had jurisdiction over motor carrier operations in the domestic offshore trade, while the FMC, under the Intercoastal Shipping Act, 1933 (1933 Act) (46 U.S.C. 843–848), had jurisdiction over water carriers operating in the trade. Because section 33 of the Shipping Act, 1916 (1916 Act) (46 U.S.C. 832) foreclosed the FMC from regulating operations that were already subject to ICC jurisdiction, the ICC asserted jurisdiction over joint motor/water rates in the domestic offshore trade, while the FMC asserted jurisdiction over ''port to port'' water carrier operations. *See Trailer Marine Transport Corp.* v. *FMC,* 602 F.2d 379 (D.C. Cir. 1979); *Puerto Rico Maritime Shipping Auth.* v. *ICC,* 645 F.2d 1102 (D.C. Cir. 1981).

The ICC Termination Act alters this regulatory scheme. By their terms, new 49 U.S.C. 13501 and 13521 give the Board jurisdiction over port to port water carrier transportation in the noncontiguous domestic trade. Moreover, the provisions of 49 U.S.C. 13702 require that, with certain exceptions, water carriers operating in the noncontiguous domestic trade file tariffs with the Board. Finally, 49 U.S.C. 13701 provides that water carrier services in the noncontiguous domestic trade are subject to rate regulation by the Board. All of these provisions, standing alone, would appear to establish that, as of January 1, 1996, carriers operating in the noncontiguous domestic trade would need to file tariffs at the Board, and at no other Federal agency.

Under section 335 of the ICC Termination Act, however, repeal of the 1933 Act and section 33 of the 1916 Act does not become effective until September 30, 1996. Given that fact, and the ''Except as otherwise provided in this Act'' language of section 2 of the ICC Termination Act, there is some ambiguity as to whether, at least until September 30, 1996, water carriers operating in the noncontiguous domestic trade must file their tariffs at the Board or the Commission,[2] and as to which agency shall be responsible for rate regulation during this interim period. The consequences of filing are not insubstantial, from either a regulatory or a practical perspective: FMC tariffs are filed electronically through an established Automated Tariff Filing and Information System, which the STB cannot practicably access or replicate; and the ICC Termination Act, through 49 U.S.C. 13701, established a zone of rate freedom that does not appear in the 1916 Act or the 1933 Act.

The transfer of jurisdiction over carriers in the domestic offshore trades from the FMC to the STB also may impact programs that will not be transferred. For example, there is a question regarding whether agreements currently filed pursuant to section 15 of the 1916 Act remain in effect until the repeal of the 1916 Act on September 30, 1996. Whether the FMC has jurisdiction to accept new agreements up to September 30, 1996 is also an issue. Similar questions may arise with regard to terminal operators and forwarders.

The Board and the Commission, therefore, request public comment on how the two agencies can, consistent with the ICC Termination Act and section 33 of the 1916 Act, best administer their respective statutes during the transition period ending September 30, 1996, in a manner that is most efficient and least disruptive to the industry and the shipping public.

Regulatory Flexibility Analysis

The Board and the Commission certify that this action will not have a significant impact on a substantial number of small entities. No new regulatory burdens are imposed, directly or indirectly, on such entities. The purpose of the decision is simply to seek comment on how best to make the transition to a new regulatory regime.

Environmental And Energy Analysis

This action will not significantly affect either the quality of the human environment or conservation of energy resources.

Decided: February 8, 1996.

By the Board, Chairman Morgan, Vice Chairman Simmons, and Commissioner Owen.

Vernon A. Williams,

Secretary, Surface Transportation Board.

By the Commission, Chairman Creel, Comissioners Hsu, Scroggins, and Won.

Joseph C. Polking,

Secretary, Federal Maritime Commission.

[FR Doc. 96–3265 Filed 2–13–96; 8:45 am]

BILLING CODE 4915–00–P (1/2); 6730–01–P (1/2)

[1] The two agencies are handling this matter simultaneously.

[2] As noted, section 33 of the 1916 Act, as amended by section 205 of the ICC Termination Act, precludes the FMC from exercising concurrent power or jurisdiction over any matter within the power or jurisdiction of the Board.

DEPARTMENT OF THE TREASURY

Office of Thrift Supervision

[AC–14; OTS No. 13495]

Catskill Savings Bank, Catskill, New York; Approval of Conversion Application

Notice is hereby given that on February 8, 1996, the Director,

Corporate Activities, Office of Thrift Supervision, or her designee, acting pursuant to delegated authority, approved the application of Catskill Savings Bank, Catskill, New York, to convert to the stock form of organization. Copies of the application are available for inspection at the Dissemination Branch, Office of Thrift Supervision, 1700 G Street, N.W., Washington, D.C. 20552, and the Northeast Regional Office, Office of Thrift Supervision, 10 Exchange Place, 18th Floor, Jersey City, New Jersey 07302.

Dated: February 8, 1996.

By the Office of Thrift Supervision.

Nadine Y. Washington,

Corporate Secretary.

[FR Doc. 96–3270 Filed 2–13–96; 8:45 am]

BILLING CODE 6720–01–P

[AC–11; OTS Nos. H–2137 and 04569]

Commonwealth M.H.C., Valley Forge, Pennsylvania; Approval of Conversion Application

Notice is hereby given that on January 31, 1996, the Director, Corporate Activities, Office of Thrift Supervision, or her designee, acting pursuant to delegated authority, approved the application of Commonwealth M.H.C., Valley Forge, Pennsylvania, to convert to the stock form of organization. Copies of the application are available for inspection at the Dissemination Branch, Office of Thrift Supervision, 1700 G Street, N.W., Washington, D.C. 20552, and the Northeast Regional Office, Office of Thrift Supervision, 10 Exchange Place, 18th Floor, Jersey City, New Jersey 07302.

Dated: February 8, 1996.

By the Office of Thrift Supervision.

Nadine Y. Washington,

Corporate Secretary.

[FR Doc. 96–3267 Filed 2–13–96; 8:45 am]

BILLING CODE 6720–01–P

[AC–12; OTS No. 0086]

Great American Federal Savings and Loan Association, Pittsburgh, Pennsylvania; Approval of Conversion Application

Notice is hereby given that on February 5, 1996, the Director, Corporate Activities, Office of Thrift Supervision, or her designee, acting pursuant to delegated authority, approved the application of Great American Federal Savings and Loan Association, Pittsburgh, Pennsylvania, to convert to the stock form of organization. Copies of the application are available for inspection at the Dissemination Branch, Office of Thrift Supervision, 1700 G Street, N.W., Washington, D.C. 20552, and the Northeast Regional Office, Office of Thrift Supervision, 10 Exchange Place, 18th Floor, Jersey City, New Jersey 07302.

Dated: February 8, 1996.

By the Office of Thrift Supervision.

Nadine Y. Washington,

Corporate Secretary.

[FR Doc. 96–3268 Filed 2–13–96; 8:45 am]

BILLING CODE 6720–01–P

[AC–15; OTS Nos. H–2651 and 05843]

North Central Bancshares M.H.C., Ft. Dodge, Iowa; Approval of Conversion Application

Notice is hereby given that on February 8, 1996, the Director, Corporate Activities, Office of Thrift Supervision, or her designee, acting pursuant to delegated authority, approved the application of North Central Bancshares M.H.C., Ft. Dodge, Iowa, to convert to the stock form of organization. Copies of the application are available for inspection at the Dissemination Branch, Office of Thrift Supervision, 1700 G Street, N.W., Washington, D.C. 20552, and the Midwest Regional Office, Office of Thrift Supervision, 122 W. John Carpenter Freeway, Suite 600, Dallas, Texas 75039–2010.

Dated: February 8, 1996.

By the Office of Thrift Supervision.

Nadine Y. Washington,

Corporate Secretary.

[FR Doc. 96–3271 Filed 2–13–96; 8:45 am]

BILLING CODE 6720–01–P

[AC–13; OTS Nos. H–2628 and 01405]

Pomona First Federal Savings and Loan Association, Pomona, California; Approval of Conversion Application

Notice is hereby given that on February 6, 1996, the Director, Corporate Activities, Office of Thrift Supervision, or her designee, acting pursuant to delegated authority, approved the application of Pomona First Federal Savings and Loan Association, Pomona, California, to convert to the stock form of organization. Copies of the application are available for inspection at the Dissemination Branch, Office of Thrift Supervision, 1700 G Street, N.W., Washington, D.C. 20552, and the West Regional Office, Office of Thrift Supervision, 1 Montgomery Street, Suite 400, San Francisco, California 94104.

Dated: February 8, 1996.

By the Office of Thrift Supervision.

Nadine Y. Washington,

Corporate Secretary.

[FR Doc. 96–3269 Filed 2–13–96; 8:45 am]

BILLING CODE 6720–01–P

DEPARTMENT OF VETERANS AFFAIRS

Cost-of-Living Adjustments for Service-Connected Benefits

AGENCY: Department of Veterans Affairs.

ACTION: Notice.

SUMMARY: As required by the Veterans' Compensation Cost-of-Living Adjustment Act of 1995, Public Law 104–57, the Department of Veterans Affairs (VA) is hereby giving notice of cost-of-living adjustments (COLAs) in certain benefit rates. These COLAs affect the compensation and dependency and indemnity compensation (DIC) programs.

DATES: These COLAs are effective December 1, 1995, the date provided by Public Law 104–57.

FOR FURTHER INFORMATION CONTACT: Paul Trowbridge, Consultant, Regulations Staff, Compensation and Pension Service (211B), Veterans Benefits Administration, Department of Veterans Affairs, 810 Vermont Avenue, NW., Washington, DC 20420, (202) 273–7210.

SUPPLEMENTARY INFORMATION: The Veterans' Compensation Cost-of-Living Adjustment Act of 1995, Public Law 104–57, provides for a COLA for each of the rates in sections 1114, 1115(1), 1162, 1311, 1313, and 1314 of title 38, United States Code. VA is required to increase these benefit rates by the same percentage as increases in the benefit amounts payable under title II of the Social Security Act. In the computation of increased rates, fractions of a dollar are rounded to the next lower dollar amount. The increased rates are required to be published in the Federal Register.

The Social Security Administration has announced that there will be a 2.6 percent cost-of-living increase in Social Security benefits. Therefore, applying the same percentage, the following increased rates for VA compensation and DIC programs will be effective December 1, 1995:

DISABILITY COMPENSATION (38 U.S.C. 1114)

Disability evaluation—in percent	Monthly rate
10%	$91
20	174
30	266
40	380
50	542
60	683
70	862
80	999
90	1,124
100	1,870
(38 U.S.C. 1114(k) through (s)):	
38 U.S.C. 1114(k)	$72; 2,326; 72; 3,261
38 U.S.C. 1114(l)	2,326
38 U.S.C. 1114(m)	2,565
38 U.S.C. 1114(n)	2,918
38 U.S.C. 1114(o)	3,261
38 U.S.C. 1114(p)	3,261
38 U.S.C. 1114(r)	1,400; 2,085
38 U.S.C. 1114(s)	2,093
Additional compensation for dependents (38 U.S.C. 1115(1)):	
38 U.S.C. 1115(1)	
38 U.S.C. 1115(1)(A)	109
38 U.S.C. 1115(1)(B)	186; 57
38 U.S.C. 1115(1)(C)	75; 57
38 U.S.C. 1115(1)(D)	88
38 U.S.C. 1115(1)(E)	205
38 U.S.C. 1115(1)(F)	172
Clothing allowance (38 U.S.C. 1162)—503 per year..	
DIC to a surviving spouse (38 U.S.C. 1311):	
Pay grade:	
E–1	810
E–2	810
E–3	810
E–4	810
E–5	810
E–6	810
E–7	837
E–8	883
E–9(1)	922
W–1	855
W–2	889
W–3	916
W–4	969
O–1	855
O–2	883
O–3	945
O–4	999
O–5	1,100
O–6	1,240
O–7	1,339
O–8	1,467
O–9	1,572
O–10(2)	1,724

(1) If the veteran served as sergeant major of the Army, senior enlisted advisor of the Navy, chief master sergeant of the Air Force, sergeant major of the Marine Corps, or master chief petty officer of the Coast Guard, the surviving spouse's monthly rate is $994.

(2) If the veteran served as Chairman or Vice Chairman of the Joint Chiefs of Staff, Chief of Staff of the Army, Chief of Naval Operations, Chief of Staff of the Air Force, Commandant of the Marine Corps, or Commandant of the Coast Guard, the surviving spouse's monthly rate is $1,848.

DIC TO SURVIVING SPOUSE (38 U.S.C. 1311(a) THROUGH (D))

38 U.S.C. 1311(a) through (d)	Monthly rate
38 U.S.C. 1311(a)(1)	$810
38 U.S.C. 1311(a)(2)	177
38 U.S.C. 1311(b)	205
38 U.S.C. 1311(c)	205
38 U.S.C. 1311(d)	99
DIC to children (38 U.S.C. 1313):	
38 U.S.C. 1313	
38 U.S.C. 1313(a)(1)	344
38 U.S.C. 1313(a)(2)	496
38 U.S.C. 1313(a)(3)	643
38 U.S.C. 1313(a)(4)	769; 126
Supplemental DIC to children (38 U.S.C. 1314):	
38 U.S.C. 1314	
38 U.S.C. 1314(a)	205
38 U.S.C. 1314(b)	344
38 U.S.C. 1314(c)	174

Dated: February 5, 1996.

Jesse Brown,

Secretary of Veterans Affairs.

[FR Doc. 96–3218 Filed 2–13–96; 8:45 am]

BILLING CODE 8320–01–P

Advisory Committee on Minority Veterans, Notice of Meeting

The Department of Veterans Affairs (VA), in accordance with Public Law 103–446, gives notice that a meeting of the Advisory Committee on Minority Veterans will be held March 11–13, 1996, in Washington, DC. The purpose of the Advisory Committee on Minority Veterans is to advise the Secretary of Veterans Affairs on the administration of VA benefits and services for minority veterans and to assess the needs of minority veterans and evaluate whether VA compensation, medical and rehabilitation services, outreach, and other programs are meeting those needs. The Committee will make recommendations to the Secretary regarding such activities.

The sessions will convene daily in room 230, VA Central Office (VACO) Building, 810 Vermont Avenue, NW, Washington, DC, from 8:30 a.m. to 4:30 On Monday March 11, five Veterans Service Organizations and five Community Based Organizations will testify about how their organizations inform and assist minority veterans. On March 12th, two VA Under Secretaries and the Assistant Secretary of Labor will testify about their agencies programs for minority veterans. On Wednesday March 13, the Committee will discuss subcommittee reports and findings. All sessions will be open to the public up to the seating capacity of the room. Because seating is limited, it will be necessary for those wishing to attend to contact Mrs. Angelia Sare, Department of Veterans Affairs (phone 202 273–6708) prior to March 7, 1996. No time will be allocated for the purpose of receiving oral presentations from the public, however, the Committee will accept appropriate written comments from interested parties on issues affecting minority veterans. Such comments should be referred to the Committee at the following address: Advisory Committee on Minority Veterans, Center for Minority Veterans (00M), U.S. Department of Veterans Affairs, 810 Vermont Avenue, NW, Washington, DC 20420.

Dated: February 5, 1996.

By Direction of the Secretary:

Heyward Bannister,

Committee Management Officer.

[FR Doc. 96–3219 Filed 2–13–96; 8:45 am]

BILLING CODE 8320–01–M

Sunshine Act Meetings

Federal Register
Vol. 61, No. 31
Wednesday, February 14, 1996

This section of the FEDERAL REGISTER contains notices of meetings published under the "Government in the Sunshine Act" (Pub. L. 94-409) 5 U.S.C. 552b(e)(3).

U.S. CONSUMER PRODUCT SAFETY COMMISSION

"FEDERAL REGISTER" CITATION OF PREVIOUS ANNOUNCEMENT: _____

PREVIOUSLY ANNOUNCED TIME AND DATE OF MEETING: 2:00 p.m., February 13, 1996.

CHANGES IN MEETING: Meeting concerning Multiple Tube Mine & Shell Fireworks was canceled.

For a recorded message containing the latest agenda information, call (301) 504–0709.

CONTACT PERSON FOR ADDITIONAL INFORMATION: Sadye E. Dunn, Office of the Secretary, 4330 East West Highway, Bethesda, MD 20207 (301) 504–0800.

Dated: February 12, 1996.

Sadye E. Dunn,

Secretary.

[FR Doc. 96–3512 Filed 2–12–96; 3:12 pm]

BILLING CODE 6355–01–M

U.S. CONSUMER PRODUCT SAFETY COMMISSION

TIME AND DATE: 9:30 a.m., Tuesday, February 20, 1996.

LOCATION: Room 420, East West Towers, 4330 East West Highway, Bethesda, Maryland.

STATUS:

Open to the Public.

Matter to be Considered:

Multiple Tube Mine & Shell Fireworks

The staff will brief the Commission on a final rule addressing the tip-over of large multiple tube mine and shell fireworks devices.

For a recorded message containing the latest agenda information, call (301) 504–0709.

CONTACT PERSON FOR ADDITIONAL INFORMATION: Sadye E. Dunn, Office of the Secretary, 4330 East West Highway, Bethesda, MD 20207 (301) 504–0800.

Dated: February 12, 1996.

Sadye E. Dunn,

Secretary.

[FR Doc. 96–3513 Filed 2–12–96; 3:12 pm]

BILLING CODE 6355–01–M

NATIONAL SCIENCE FOUNDATION

NATIONAL SCIENCE BOARD

DATE AND TIME:

February 23, 1996, 11:00 a.m., Closed Session
February 23, 1996, 8:00 a.m., Open Session

PLACE: National Science Foundation, 4201 Wilson Boulevard, Room 1235, Arlington, Virginia 22230.

STATUS:

Part of this meeting will be open to the public.

Part of this meeting will be closed to the public.

MATTERS TO BE CONSIDERED:

Friday, February 23, 1996

(Open Session (8:00 a.m.–11:00 a.m.)

—Minutes, December 1995 Meeting
—Closed Session Agenda Items for March 1996 Meeting
—Chairman's Report
—Director's Report
—Committee Reports
—Other Business
—Presentations: Issues in Education
  —National Academy of Sciences (NAS) Science Standards
  —Education and Human Resources (EHR) Systemic Initiatives
—Presentation: Biological Sciences (BIO) Directorate

Friday, February 23, 1996

(Closed Session (11:00 a.m.–11:45 a.m.)

—Personnel
—Minutes, December 1995 Meeting
—Budget
—Grants and Contracts
—Adjourn

Marta Cehelsky,

Executive Officer.

[FR Doc. 96–3375 Filed 2–9–95; 4:43 p.m.]

BILLING CODE 7555–01–M

U.S. RAILROAD RETIREMENT BOARD

Notice is hereby given that the Railroad Retirement Board will hold a meeting on February 21, 1996, 9:00 a.m., at the Board's meeting room on the 8th floor of its headquarters building, 844 North Rush Street, Chicago, Illinois, 60611. The agenda for this meeting follows:

(1) Management Representation Letter
(2) Response to Inspector General's Reinvention Proposal
(3) Region 3 Vacancies
(4) Draft Agreements with the Internal Revenue Service
(5) Special Act/Service Awards
(6) Draft Language to amend RRA Provision
(7) Coverage Determination—Rail Investments, Inc.
(8) Transportation Communications Union Request for Extension to File Their Exceptions Regarding the Hearing Examiner's Report on CSX Intermodal, Inc.
(9) Administrative Circular REF (RRB)–4
(10) Labor Member Truth in Budgeting Status Report

The entire meeting will be open to the public. The person to contact for more information is Beatrice Ezerski, Secretary to the Board, Phone No. 312–751–4920.

Dated: February 9, 1996.

Beatrice Ezerski,

Secretary to the Board.

[FR Doc. 96–3404 Filed 2–12–96; 11:22 am]

BILLING CODE 7905–01–M

federal register

Wednesday
February 14, 1996

Part II

Environmental Protection Agency

40 CFR Part 85

Air Pollution Control: Amendments to Regulations Governing the Importation of Nonconforming Vehicles; Final Rule

ENVIRONMENTAL PROTECTION AGENCY

40 CFR Part 85

[FRL–5419–8]

RIN 2060–AC58

Air Pollution Control: Amendments to Regulations Governing the Importation of Nonconforming Vehicles

AGENCY: Environmental Protection Agency (EPA).

ACTION: Final rule.

SUMMARY: With this action, EPA is amending 40 CFR part 85, subpart P to modify the emissions standards applicable to imported nonconforming light duty vehicles and light duty trucks. Such vehicles will now have to meet emission standards that were in effect in the year the vehicle was originally produced, using currently applicable testing methods. The Notice of Proposed Rulemaking (NPRM) for this rule proposed a number of other changes to the imported nonconforming vehicle program. EPA will address these additional issues in a subsequent final rulemaking.

EFFECTIVE DATE: This final rule is effective on February 1, 1996.

ADDRESSES: Materials relevant to this rule are contained in the EPA Air Docket LE–131, Attention: Docket No. A–89–20, located at the Air Docket Section, U.S. Environmental Protection Agency, Room M–1500, 401 M Street, S.W. Washington, DC 20460. Telephone (202) 260–7548. The docket may be reviewed on weekdays between the hours of 8:00 a.m. to 5:30 p.m. As provided in 40 CFR part 2, a reasonable fee may be charged for copying services.

FOR FURTHER INFORMATION CONTACT: Mr. Leonard D. Lazarus, Vehicle Programs and Compliance Division (6405J), U.S. Environmental Protection Agency, 401 M Street, S.W., Washington, DC 20460. Telephone (202) 233–9240.

SUPPLEMENTARY INFORMATION:

I. Introduction and Background

The imports program of the U.S. Environmental Protection Agency ensures that imported motor vehicles and motor vehicle engines comply with U.S. emission requirements to protect air quality and public health. In a Federal Register Notice of Proposed Rulemaking (NPRM) published on March 24, 1994 (57 FR 13912), EPA proposed a number of amendments to the imports program regulations. These proposed changes were intended to respond to new information about imports of nonconforming vehicles and changes in the Part 86 motor vehicle certification standards, which necessitate compensating adjustments in the imports program. EPA proposed additional amendments to clarify the imports program requirements and to ensure that the regulations clearly reflect current program implementation policies.

EPA intends to address the bulk of the proposed amendments to the imports regulations in a subsequent rulemaking, as the Agency is not ready at this time to take the final action on these aspects of the NPRM. However, EPA is finalizing one portion of the proposal today because the standards for imports of nonconforming light duty vehicles and light duty trucks need to be modified without delay, in order to avoid detrimental effects on independent commercial importers' (ICI) ability to continue to import such vehicles. The Administrator has determined that this is a § 307(d)(1) rulemaking.

Sections 203(a)(1) and 203(b)(2) of the Clean Air Act (CAA or the Act) provide the statutory authority for regulations relating to the importation of new motor vehicles and motor vehicle engines that are not covered by a certificate of conformity. Section 203(a)(1) prohibits any person from importing vehicles not covered by a certificate of conformity, except as provided by regulation of the Administrator. The exception for regulations of the Administrator in section 203(a)(1) refers to the grant of authority in section 203(b)(2). Section 203(b)(2) states that a vehicle not covered by a certificate of conformity and offered for importation shall be refused admission into the United States unless the Administrator, by regulation, provides for deferring final determination regarding admission and authorizing delivery of the vehicle upon such terms and conditions as may appear appropriate to insure that any imported vehicle will be brought into conformity with applicable standards, requirements and limitations. Additional detail regarding the authority for this regulatory action is provided in the NPRM. See 57 FR 13912 (March 24, 1994).

A. Emission Standards

As proposed, EPA is eliminating the requirement that nonconforming light-duty vehicles and light-duty trucks imported pursuant to 40 CFR 85.1505 or 85.1509 meet the part 86 emission standards in effect at the time of modification. These vehicles, with a few exceptions, will instead be required to meet emission standards (with applicable deterioration factors applied) that were in effect at the time of original vehicle production, using currently applicable testing procedures.

The specific standards applicable to these vehicles are contained in a new § 85.1515. Vehicles originally produced prior to the 1975 model year shall meet the 1975 model year exhaust emission standards. Vehicles produced in model year 1975 or subsequent model years shall meet the exhaust emission standards in effect during the corresponding production year. Gasoline-fueled vehicles produced prior to the 1978 model year must also meet the 1978 model year evaporative emission standard. Finally, every vehicle originally produced in the 1978 model year or subsequent model years shall meet all applicable emission standards that were in effect for that model year as specified in part 86. For vehicles with original production years up through 1993, the full set of applicable emissions standards is laid out in the tables in § 85.1515. For vehicles with original production years of 1994 and later, all emissions standards specified in Part 86 effective in that production year will apply, including standards for any requirements not listed in the section 85.1515 tables, such as standards for cold CO and the certification short test. The vehicles must meet all applicable current model year fuel economy requirements. Vehicles greater than 20 original production (OP) years old will continue to be exempted from the emission requirements and do not have to be tested.

As discussed in the proposal (Supplementary Document pp. 27–28, Docket No. A–89–20), when EPA promulgated the prior requirement to meet standards applicable at the time of modification, the Agency had no data or evidence suggesting that older vehicles could not be modified to meet current year emission standards. Since that rulemaking, EPA has obtained evidence indicating that many older vehicles cannot be modified to meet current year emission standards without extraordinary cost, which makes the conversion financially unfeasible for many owners of such vehicles. Today's rule would give owners of older vehicles a way to import their vehicles. In addition, it would have been significantly more difficult and costly for importers to modify vehicles to comply with the current model year standards beginning in January, 1996, when the standards applicable to small volume manufacturers became substantially more stringent. EPA agrees with the statements submitted by ICIs

after the close of the comment period that the expense of such modifications would have a serious deleterious effect on their businesses and would not justify the costs.[1]

Certain commenters appear to request that EPA change the testing requirements as well as the standards to apply the testing procedures and requirements in effect in the year of original production.[2] However, these commenters provided no analysis of the effects of retaining the current testing requirements or justification for the change. EPA disagrees with the suggestion because applying the test procedures applicable in the year of original production would impose an obligation for EPA to maintain a separate certification facility in order to validate ICI testing using obsolete hardware and outdated procedures. Moreover, EPA does not believe that the existing requirement to use currently applicable testing requirements and procedures imposes costs on the ICIs that they are unable to meet or that outweigh the benefits in terms of practical ability to conduct the tests and improved accuracy of test results.

EPA has determined that the new emission standards in this rule will not have a substantial adverse impact on air quality. This determination is made, in large part, due to the relatively small number of vehicles subject to these requirements, which is not expected to increase significantly, if at all. For example, the numbers of vehicles imported pursuant to 40 CFR 85.1505 and 85.1509 have ranged from approximately 400 vehicles in 1989 to less than 200 vehicles in 1991. More importantly, only a small percentage of these vehicles would be affected by this change in the standards. Most of these vehicles were less than three years old at the time of importation, and the standards for most original production years would not have changed as of three years later.

B. Definition of FCT

EPA is also finalizing the proposed definition of Federal Compliance Testing (FCT), which is defined as the testing sequence that incorporates all of the testing requirements of part 86 applicable at the time of an emissions test conducted pursuant to subpart P. EPA has added this definition solely to make the imports regulations easier to read and understand. The reference to the FCT in section 85.1515 does not change any of the substantive requirements on importers. Prior to this final rule, ICIs had to meet Part 86 motor vehicle emissions standards and testing requirements applicable at the time of import. While this rule amends the emissions standards applicable to importers, it has no effect on the testing requirements. Thus, importers will still have to conduct any testing according to the currently applicable testing requirements. The imports regulations will refer to these applicable testing requirements under the concise term FCT. This rule incorporates the term ''FCT'' only in section 85.1515. The subsequent rulemaking will update and clarify the remaining references to testing in the imports regulations by substituting the term FCT where applicable.

C. Additional Information on the Effective Date

This rule will be effective upon signature, and EPA will make the rule available to interested parties at that time. Although EPA generally makes rules effective 30 days after the date of publication, it is not bound to do so. See section 307(d)(1) of the Clean Air Act, 42 U.S.C. 7607(d), and the Administrative Procedure Act, 5 U.S.C. 553(d).

EPA believes that there is good cause not to delay the effective date until 30 days after publication. This rule relieves regulatory burden, and hence affected parties will have no need of prior notice to allow them time to comply. In addition, as explained above, importers need this rule to become effective without delay, to avoid a substantial increase in the difficulty of meeting standards for imported nonconforming vehicles after that date. Any delay in the effectiveness of the rule could impose significant costs on these small businesses.

II. Public Participation and Discussion of Comments

No public hearing was requested on the proposed changes, and no hearing was held. During the comment period EPA received no comments relating to the narrow issues addressed in this final rule. After the close of the comment period, EPA received a number of comments supportive of this rulemaking as discussed above. EPA will address all of the other comments on the NPRM in the subsequent final rule.

III. Administrative Requirements

A. Paperwork Reduction Act

The information collection requirements in this rule have been approved by the Office of Management and Budget (OMB) under the Paperwork Reduction Act, 44 U.S.C. 3501 *et seq*, and have been assigned control number 2060–0095 (ICR No. 10.07). This rule does not add any additional information collection requirements to those approved by OMB.

B. Economic Impact

Little or no effect on the national economy will result from this rulemaking as the only effect of the amendments is to relieve the compliance burden on automobile importers. Additionally, imported nonconforming vehicles subject to these regulations represent only a very small number of the total number of vehicles sold in the United States.

C. Administrative Designation and Regulatory Analysis

Under Executive Order 12866, [58 F.R. 51,735 (October 4, 1993)] the Agency must determine whether the regulatory action is ''significant'' and therefore subject to OMB review and the requirements of the Executive Order. The Order defines ''significant regulatory action'' as one that is likely to result in a rule that may:

(1) Have an annual effect on the economy of $100 million or more or adversely affect in a material way the economy, a sector of the economy, productivity, competition, jobs, the environment, public health or safety, or State, local, or tribal governments or communities;

(2) Create a serious inconsistency or otherwise interfere with an action taken or planned by another agency;

(3) Materially alter the budgetary impact of entitlements, grants, user fees, or loan programs or the rights and obligations of recipients thereof; or

(4) Raise novel legal or policy issues arising out of legal mandates, the President's priorities, or the principles set forth in the Executive Order.

It has been determined that this rule is not a ''significant regulatory action'' under the terms of Executive Order 12866 and is therefore not subject to OMB review.

D. Impact on Small Entities

The Regulatory Flexibility Act of 1980 requires federal agencies to identify potentially adverse impacts of federal regulations upon small entities. In instances where significant impacts are possible on a substantial number of these entities, agencies are required to perform a Regulatory Flexibility Analysis.

There will not be a significant impact on a substantial number of small business entities because the proposed

[1] See comments in docket, category III. D. Number IV–D–4 through IV–D–9.

[2] See letter from Les Weaver, December 4, 1995.

rule benefits the small businesses that import nonconforming vehicles into the United States, by reducing the stringency of the applicable standards for importing these vehicles and thereby reducing importers' costs.

Therefore, as required under section 605 of the Regulatory Flexibility Act, 5 U.S.C. 601 *et seq.*, the Administrator certifies that this regulation does not have a significant impact on a substantial number of small entities.

E. Unfunded Mandates Reform Act

Title II of the Unfunded Mandates Reform Act of 1995 (UMRA), Pub. L. 104–4, establishes requirements for Federal agencies to assess the effects of their regulatory actions on State, local, and tribal governments and the private sector. Under section 202 of the UMRA, EPA generally must prepare a written statement, including a cost-benefit analysis, for proposed and final rules with ''Federal mandates'' that may result in expenditures to State, local, and tribal governments, in the aggregate, or to the private sector, of $100 million or more in any one year. Before promulgating an EPA rule for which a written statement is needed, section 205 of the UMRA generally requires EPA to identify and consider a reasonable number of regulatory alternatives and adopt the least costly, most cost-effective or least burdensome alternative that achieves the objectives of the rule. The provisions of section 205 do not apply when they are inconsistent with applicable law. Moreover, section 205 allows EPA to adopt an alternative other than the least costly, most cost-effective or least burdensome alternative if the Administrator publishes with the final rule an explanation why that alternative was not adopted.

Before EPA establishes any regulatory requirements that may significantly or uniquely affect small governments, including tribal governments, it must have developed under section 203 of the UMRA a small government agency plan. The plan must provide for notifying potentially affected small governments, enabling officials of affected small governments to have meaningful and timely input in the development of EPA regulatory proposals with significant Federal intergovernmental mandates, and informing, educating, and advising small governments on compliance with the regulatory requirements.

EPA has determined that this rule does not contain a Federal mandate that may result in expenditures of $100 million or more for State, local, and tribal governments, in the aggregate, or the private sector in any one year. This rule reduces the stringency of applicable standards for importation of nonconforming vehicles and thereby reduces costs to automobile importers. This rule will have no effect on State, local and tribal governments. Thus, today's rule is not subject to the requirements of sections 202 and 205 of the UMRA.

EPA has determined that this rule contains no regulatory requirements that might significantly or uniquely affect small governments, because small governments are not ordinarily involved in importations covered by this rule.

IV. Statutory Authority

Sec. 203, Clean Air Act, as amended (42 U.S.C. 7522).

V. Judicial Review

Under section 307(b) of the Clean Air Act, EPA hereby finds that these regulations are of national applicability. Accordingly, judicial review of this action is available only by filing a petition for review in the United States Court of Appeals for the District of Columbia Circuit within 60 days of publication. Under section 307(b)(2) of the Act, the requirements that are the subject of today's notice may not be challenged later in judicial proceedings brought by EPA to enforce these requirements.

List of Subjects in 40 CFR Part 85

Environmental protection, Motor vehicle pollution, Reporting and recordkeeping requirements, Research.

Dated: February 1, 1996.

Carol M. Browner,

Administrator.

For the reasons set out in the preamble part 85, subpart P, of title 40 of the Code of Federal Regulations is revised to read as follows:

PART 85—[AMENDED]

Subpart P—[Amended]

1. The authority citation for subpart P is revised to read as follows:

Authority: (42 U.S.C. 7522, 7525, 7541, 7542(a) and 7601(a).

2. Section 85.1502 is amended by designating the introductory text as paragraph (a), by redesignating paragraphs (a)(5) through (15) as (a)(6) through (16) and adding a new paragraph (a)(5) to read as set forth below. Paragraph (b) is reserved.

§ 85.1502 Definitions.

(a) * * *

(5) *The Federal Compliance Testing sequence (FCT).* The testing sequence that incorporates all of the testing requirements of part 86 applicable at the time of an emissions test conducted pursuant to this subpart.

* * * * *

3. Section 85.1515 is revised to read as follows:

§ 85.1515 Emission standards and test procedures applicable to imported nonconforming motor vehicles and motor vehicle engines.

(a) Notwithstanding any other requirements of this subpart, any motor vehicle or motor vehicle engine conditionally imported pursuant to § 85.1505 or § 85.1509 and required to be emission tested shall be tested using the FCT at 40 CFR part 86 applicable to current model year motor vehicles and motor vehicle engines at the time of testing.

(b) The emission standards applicable to nonconforming light-duty vehicles and light-duty trucks imported pursuant to this subpart are outlined in Tables 1 and 2 of this section, respectively. The useful life as specified in Tables 1 and 2 of this section is applicable to imported light-duty vehicles and light-duty trucks, respectively.

(c) Nonconforming motor vehicles or motor vehicle engines of 1994 OP model year and later conditionally imported pursuant to § 85.1505 or § 85.1509 shall meet all of the emission standards specified in part 86 for the model year in which the motor vehicle or motor vehicle engine is modified. The useful life specified in part 86 for the model year in which the motor vehicle or motor vehicle engine is modified is applicable where useful life is not designated in this subpart.

(d) ICIs may not participate in emission-related programs for emissions averaging, banking and trading, or noncompliance penalties.

TABLE 1 TO § 85.1515.—EMISSION STANDARDS APPLICABLE TO IMPORTED LIGHT-DUTY MOTOR VEHICLES [1 2 3]

OP Year	Hydrocarbon	Carbon monoxide	Oxides of nitrogen	Particulate	Diesel hydrocarbon	Evaporative (years/miles)	Useful life
1968–76	1.5 gpm	15 gpm	3.1 gpm		6.0 g/test	5/50,000	

TABLE 1 TO § 85.1515.—EMISSION STANDARDS APPLICABLE TO IMPORTED LIGHT-DUTY MOTOR VEHICLES [1 2 3]—Continued

OP Year	Hydrocarbon	Carbon monoxide	Oxides of nitrogen	Particulate	Diesel hydrocarbon	Evaporative (years/miles)	Useful life
1977–79	1.5 gpm	15 gpm	2.0 gpm		6.0 g/test	5/50,000	
1980	0.41 gpm	7.0 gpm	2.0 gpm		6.0 g/test	5/50,000	
1981	0.41 gpm	3.4 gpm	1.0 gpm		2.0 g/test	5/50,000	
1982–86	0.41 gpm	3.4 gpm	1.0 gpm	0.60 gpm	2.0 g/test	5/50,000	
1987–93	0.41 gpm	3.4 gpm	1.0 gpm	0.20 gpm	2.0 g/test	5/50,000	
1994 and later	(4)	(4)	(4)	(4)	(4)	(4)	

[1] Diesel particulate standards apply only to diesel fueled light-duty vehicles. Evaporative hydrocarbon standards apply only to non-diesel fueled light-duty vehicles. For alternative fueled light-duty vehicles, the evaporative hydrocarbon standard is interpreted as organic material hydrocarbon equivalent grams carbon per test, as applicable.

[2] No crankcase emissions shall be discharged into the ambient atmosphere from any non-diesel fueled light-duty vehicle.

[3] All light-duty vehicles shall meet the applicable emission standards at both low and high-altitudes according to the procedures specified in 40 CFR part 86 for current model year motor vehicles at the time of testing.

[4] Specified in 40 CFR part 86 for the OP year of the vehicle, per 85.1515(c).

TABLE 2.—EMISSION STANDARDS APPLICABLE TO IMPORTED LIGHT-DUTY TRUCKS [1 2 3 4 5]

OP year	Hydrocarbon	Carbon monoxide	Oxides of nitrogen	Particulate	Diesel hydrocarbon	Evaporative (years/miles)	Useful life
1968–78	2.0 gpm	20 gpm	3.1 gpm		6.0 g/test	5/50,000	
1979–80	1.7 gpm	18 gpm	2.3 gpm		6.0 g/test	5/50,000	
1981	1.7 gpm	18 gpm	2.3 gpm		2.0 g/test	5/50,000	
1982–83	1.7 gpm	18 gpm	2.3 gpm	0.60 gpm	2.0 g/test	5/50,000	
	(2.0)	(26)	(2.3)	(0.60)	(2.6)		
1984	0.80 gpm	10 gpm	2.3 gpm	0.60 gpm	2.0 g/test	5/50,000	
	(1.0)	(14)	(2.3)	(0.60)	(2.6)		
1985–86	0.80 gpm	10 gpm	2.3 gpm	0.60 gpm	2.0 g/test	11/120,000	
	(1.0)	(14)	(2.3)	(0.60)	(2.6)		
1987	0.80 gpm	10 gpm	2.3 gpm	0.26 gpm	2.0 g/test	11/120,000	
	(1.0)	(14)	(2.3)	(0.26)	(2.6)		
1988–89	0.80 gpm	10 gpm	1.2 gpm[6]	0.26 gpm[7]	2.0 g/test	11/120,000	
	(1.0)	(14)	(1.2)	(2.0)	(2.6)		
	0.80 gpm	10 gpm	1.7 gpm[6]	0.45 gpm[7]	2.0 g/test	11/120,000	
	(1.0)	(14)	(1.7)	(0.26)	(2.6)		
	0.80 gpm	10 gpm	2.3 gpm[6]	0.45 gpm[7]	2.0 g/test	11/120,000	
	(1.0)	(14)	(2.3)	(0.26)	(2.6)		
1990–93	0.80 gpm	10 gpm	1.2 gpm[8]	0.26 gpm[7]	2.0 g/test	11/120,000	
	(1.0)	(14)	(1.2)	(0.26)	(2.6)		
	0.80 gpm	10 gpm	1.7 gpm[8]	0.45 gpm[7]	2.0 g/test	11/120,000	
	(1.0)	(14)	(1.7)	(0.26)	(2.6)		
1994 and later	(9)	(9)	(9)	(9)	(9)	(9)	

[1] Diesel particulate standards apply only to diesel fueled light-duty trucks. Evaporative hydrocarbon standards apply only to non-diesel fueled light-duty trucks. For alternative fueled light-duty trucks, the evaporative hydrocarbon standard is interpreted as organic material hydrocarbon equivalent grams carbon per test, as applicable.

[2] No crankcase emissions shall be discharged into the ambient atmosphere from any non-diesel fueled light-duty truck.

[3] A carbon monoxide standard of 0.50% of exhaust flow at curb idle is applicable to all 1984 and later model year light-duty trucks sold to, or owned by, an importer for principal use at other than a designated high-altitude location. This requirement is effective for light-duty trucks sold to, or owned by an importer for principal use at a designated high-altitude location beginning with the 1988 model year.

[4] All 1982 OP year and later light-duty trucks sold to, or owned by, an importer for principal use at a designated high-altitude location shall meet high-altitude emission standards according to the requirements specified in 40 CFR part 86 for current model year light-duty trucks at the time of testing.

[5] Standards in parentheses apply to motor vehicles sold to, or owned by, an importer for principal use at a designated high-altitude location. These standards must be met at high-altitude according to the procedures specified in 40 CFR part 86 for current model year motor vehicles at the time of testing.

[6] The oxides of nitrogen standard of 1.2 gpm applies to light-duty trucks up to and including 3,750 pounds loaded vehicle weight and 6,000 pounds or less gross vehicle weight the 1.7 gpm standard applies to light-duty trucks greater than 3,750 pound loaded vehicle weight and 6,000 pounds or less gross vehicle weight; the 2.3 gpm standard applies to light-duty trucks 6,001 pounds gross vehicle weight and greater.

[7] The diesel particulate standard of 0.26 gpm applies to light-duty trucks up to and including 3,750 pounds loaded vehicle weight; the 0.45 gpm standard applies to light-duty trucks 3,751 pounds and greater loaded vehicle weight.

[8] The oxides of nitrogen standard of 1.2 gpm applies to light-duty trucks up to and including 3,750 pounds loaded vehicle weight; the 1.7 gpm standard applies to light-duty trucks 3,751 pounds and greater loaded vehicle weight.

[9] Specified in 40 CFR part 86 for the OP year of the vehicle, per 85.1515(c).

[FR Doc. 96–2915 Filed 2–13–96; 8:45 am]

BILLING CODE 6560–50–P

federal register

Wednesday
February 14, 1996

Part III

Department of Justice

Bureau of Prisons

28 CFR Part 540

Correspondence: Restricted Special Mail Procedures; Proposed Rule

DEPARTMENT OF JUSTICE

Bureau of Prisons

28 CFR Part 540

[BOP–1048–P]

RIN 1120–AA48

Correspondence: Restricted Special Mail Procedures

AGENCY: Bureau of Prisons, Justice.

ACTION: Proposed rule.

SUMMARY: In this document, the Bureau of Prisons is proposing to amend its regulations on correspondence to provide for restricted special mail procedures in instances where the Warden has reason to believe that the special mail either has posed a threat or may pose a threat of physical harm to the intended recipient. Under these procedures, special mail addressed to Federal court officials, members of Congress, or, if requested, by other intended special mail recipients would be subject to inspection, in the presence of the inmate, for contraband or the threat of physical harm. These amendments are intended to provide for the continued efficient and secure operation of the institution and to protect the public.

DATES: Comments must be received by April 15, 1996.

ADDRESSES: Office of General Counsel, Bureau of Prisons, HOLC Room 754, 320 First Street NW., Washington, DC 20534.

FOR FURTHER INFORMATION CONTACT: Roy Nanovic, Office of General Counsel, Bureau of Prisons, phone (202) 514–6655.

SUPPLEMENTARY INFORMATION: The Bureau of Prisons is proposing to amend its regulations on correspondence (28 CFR part 540, subpart B). Current regulations on this subject were published in the Federal Register on October 1, 1985 (50 FR 40109) and were amended on February 1, 1991 (56 FR 4159).

Current provisions in § 540.18(c) state that outgoing special mail may be sealed by the inmate and is not subject to inspection. The Bureau is revising paragraph (c) to allow for restricted special mail procedures for special mail addressed to Federal court officials and members of Congress, and, if so requested, to other intended recipients. These restricted special mail procedures apply in cases where the Warden (with the concurrence of the Regional Counsel) documents in writing that the inmate's special mail either has posed a threat or may pose a threat of physical harm to the intended recipient. Any inmate placed on restricted special mail status would be notified in writing by the Warden of the reason for being so placed. The Warden is required to review an inmate's restricted special mail status at least once every 180 days and to notify the inmate in writing of the results of that review. The inmate may be removed from restricted special mail status if the Warden (with the concurrence of the Regional Counsel) determines that the inmate's special mail does not threaten or pose a threat of physical harm to the intended recipient.

An example of a case in which the inmate's special mail may pose a threat of physical harm is when an inmate's past criminal activity or current behavior suggests a propensity to harm others through use of the mail. Even though confined in an institution, an inmate convicted of sending explosives through the mail may be capable of assembling a device to be included in special mail, which poses a danger to the intended recipient.

Procedures for restricted special mail allow staff to inspect special mail material and then to observe the inmate sealing the material. This procedure is not dissimilar to the Bureau's procedures for the receipt of incoming special mail under which special mail addressed to an inmate is opened in the presence of the inmate for inspection for physical contraband and the qualification of any enclosures as special mail.

The intent of this amendment is to apply the status of restricted special mail only when the inmate's conduct warrants it. The Bureau estimates that the vast majority of outgoing inmate special mail will be unaffected by the amendment. An inmate who is so affected may appeal the action through the administrative remedy procedure which is available to inmates for the formal review of a complaint which relates to the inmate's imprisonment.

The Bureau of Prisons has determined that this rule is not a significant regulatory action for the purpose of E.O. 12866, and accordingly was not reviewed by the Office of Management and Budget. After review of the law and regulations, the Director, Bureau of Prisons has certified that this rule, for the purpose of the Regulatory Flexibility Act (Pub. L. 96–354), does not have a significant impact on a substantial number of small entities.

Interested persons may participate in this proposed rulemaking by submitting data, views, or arguments in writing to the Bureau of Prisons, 320 First Street NW., HOLC Room 754, Washington, DC 20534. Comments received during the comment period will be considered before final action is taken. All comments received remain on file for public inspection at the above address. The proposed rule may be changed in light of the comments received. No oral hearings are contemplated.

List of Subjects in 28 CFR Part 540

Prisoners.

Kathleen M. Hawk,

Director, Bureau of Prisons.

Accordingly, pursuant to the rulemaking authority vested in the Attorney General in 5 U.S.C. 552(a) and delegated to the Director, Bureau of Prisons in 28 CFR 0.96(p), part 540 in subchapter C of 28 CFR, chapter V is proposed to be amended as set forth below.

SUBCHAPTER C—INSTITUTIONAL MANAGEMENT

PART 540—CONTACT WITH PERSONS IN THE COMMUNITY

1. The authority citation for 28 CFR part 540 is revised to read as follows:

Authority: 5 U.S.C. 301, 551, 552a; 18 U.S.C. 1791, 3621, 3622, 3624, 4001, 4042, 4081, 4082 (Repealed in part as to offenses committed on or after November 1, 1987), 5006–5024 (Repealed October 12, 1984 as to offenses committed after that date), 5039; 28 U.S.C. 509, 510; 28 CFR 0.95–0.99.

2. In § 540.18, paragraphs (c) and (d) are revised to read as follows:

§ 540.18 Special mail.

* * * * *

(c) (1) Except as provided for in paragraph (c)(2) of this section, outgoing special mail may be sealed by the inmate and is not subject to inspection.

(2) Special mail shall be screened in accordance with the provisions of paragraph (c)(2)(iii) of this section when the special mail is being sent by an inmate who has been placed on restricted special mail status and the special mail is addressed to a Federal court official, a member of Congress, or to any other intended recipient when that other intended recipient has requested such treatment.

(i) An inmate may be placed on restricted special mail status if the Warden, with the concurrence of the Regional Counsel, documents in writing that the special mail either has posed a threat or may pose a threat of physical harm to the recipient (e.g., the inmate has previously used special mail to threaten physical harm to a recipient).

(ii) The Warden shall notify the inmate in writing of the reason the inmate is being placed on restricted special mail status.

(iii) An inmate on restricted special mail status must present all materials and packaging intended to be sent as special mail to staff for inspection. Staff shall inspect the special mail material and packaging, in the presence of the inmate, for contraband or the threat of physical harm. Upon completion of the inspection, staff shall return the special mail material to the inmate if the material does not contain contraband, or pose a threat of physical harm to the intended recipient. The inmate must then seal the special mail material in the presence of staff. Special mail determined to pose a threat to the intended recipient shall be forwarded to the appropriate law enforcement entity. Staff shall send a copy of the material, minus the contraband, to the intended recipient along with notification that the original of the material was forwarded to the appropriate law enforcement entity.

(iv) The Warden shall review an inmate's restricted special mail status at least once every 180 days. The inmate is to be notified of the results of this review. An inmate may be removed from restricted special mail status if the Warden determines, with the concurrence of the Regional Counsel, that the special mail does not threaten or pose a threat of physical harm to the intended recipient.

(v) An inmate on restricted mail status may seek review of the restriction through the Administrative Remedy Procedure.

(d) Except for special mail processed in accordance with paragraph (c)(2) of this section, staff shall stamp the following statement directly on the back side of the inmate's outgoing special mail: ''The enclosed letter was processed through special mailing procedures for forwarding to you. The letter has neither been opened nor inspected. If the writer raises a question or problem over which this facility has jurisdiction, you may wish to return the material for further information or clarification. If the writer encloses correspondence for forwarding to another addressee, please return the enclosure to the above address.''

[FR Doc. 96–3288 Filed 2–13–96; 8:45 am]

BILLING CODE 4410–05–P

federal register

Wednesday
February 14, 1996

Part IV

Department of Housing and Urban Development

24 CFR Part 882

Section 8 Moderate Rehabilitation Single Room Occupancy Program for Homeless Individuals; Rule

DEPARTMENT OF HOUSING AND URBAN DEVELOPMENT

Office of the Assistant Secretary for Community Planning and Development

24 CFR Part 882

[Docket No. FR–3929–I–01]

RIN 2506–AB75

Section 8 Moderate Rehabilitation Single Room Occupancy Program for Homeless Individuals; Amendments

AGENCY: Office of the Assistant Secretary for Community Planning and Development, HUD.

ACTION: Interim rule.

SUMMARY: This interim rule amends HUD's regulations for the Section 8 Moderate Rehabilitation Single Room Occupancy Program for Homeless Individuals at 24 CFR part 882, subpart H. These amendments conform the program regulations with statutory and regulatory changes. The amendments will clarify and update the regulations according to current requirements.

DATES: Effective date: March 15, 1996. Comments due date: April 15, 1996.

ADDRESSES: Interested persons are invited to submit comments regarding this interim rule to the Office of General Counsel, Rules Docket Clerk, Room 10276, Department of Housing and Urban Development, 451 Seventh Street SW., Washington, DC 20410–0500. Communications should refer to the above docket number and title. A copy of each communication submitted will be available for public inspection and copying on weekdays between 7:30 a.m. and 5:30 p.m. at the above address. Comments sent by FAX are not acceptable.

FOR FURTHER INFORMATION CONTACT: Maggie H. Taylor, Director, Office of Special Needs Assistance Programs, Department of Housing and Urban Development, 451 Seventh Street, SW, Washington, DC 20410; (202) 708–4300; TTY for persons who are deaf, hard-of-hearing, or who have speech impairments (202) 708–2565. (Telephone numbers are not toll-free.)

SUPPLEMENTARY INFORMATION:

Background

This interim rule makes several changes to conform the Section 8 Moderate Rehabilitation Single Room Occupancy (SRO) program regulations with statutory and regulatory changes. First, this interim rule eliminates the remaining provisions on the required use of housing authority (HA) waiting lists. In an interim rule published on March 15, 1993 (58 FR 13828), HUD conformed the process for selecting homeless persons for participation in the SRO program with the process used in HUD's other homeless programs. In place of the HA waiting list process, the interim rule required that HAs and/or Owners engage in outreach efforts to bring homeless individuals into the program, and that vacant units be rented directly to homeless individuals located through these outreach efforts. This interim rule deletes the remaining references to HA waiting lists that HUD inadvertently overlooked. This interim rule also clarifies the role of HAs in helping to identify homeless individuals during the outreach process (§ 882.808(a)(1)).

Second, this interim rule conforms the program regulations with section 1405 of the Housing and Community Development Act of 1992 (Pub. L. 102–550, approved October 28, 1992), which amended the Stewart B. McKinney Homeless Assistance Act (42 U.S.C. 11401). This statutory amendment includes a requirement for the participation of homeless individuals in considering and making policies and decisions regarding rehabilitation of structures receiving assistance under this program, and for the involvement of homeless individuals in the rehabilitation and operation of these structures. This interim rule implements the requirement at § 882.808(q).

The statutory amendment also requires a formal process for terminating assistance to individuals who violate program requirements. HUD has determined that the existing requirements for the termination of tenancy at § 882.808(l) sufficiently protect the rights of homeless individuals and should serve to prevent abuses such as lack of notice. Therefore, no change to the regulations is necessary to implement the requirement. (Note: This interim rule does not change the lawful grounds for terminating assistance. Termination of assistance due to unwillingness to accept supportive services or other activities that do not of themselves constitute a violation of the housing lease are not allowed.)

The statutory amendment further provides that private nonprofit organizations can apply directly for SRO assistance. Prior to the amendments, the only eligible applicants under the program were public housing agencies and Indian housing authorities. To implement this change, the interim rule adds definitions of ''applicant'' and ''private nonprofit organization'' at § 882.802. This revised section further provides that HUD will require private nonprofit applicants to subcontract with public housing agencies to administer their rental assistance.

Third, this interim rule conforms the program regulations with the environmental review procedures in 24 CFR part 58. The Multifamily Housing Property Disposition Reform Act of 1994 (Pub. L. 103–233, approved April 11, 1994) made these procedures applicable to the Section 8 Moderate Rehabilitation SRO program, and HUD published implementing regulations in the Federal Register on March 13, 1995 (60 FR 13518). Under part 58, it is the HA's responsibility to obtain an agreement with the responsible entity designated under part 58 for the performance of environmental reviews.

Fourth, this interim rule revises the provision on project eligibility at § 882.803(a)(2). This interim rule will provide that housing is ineligible for assistance under this program if it is receiving Federal funding for rental assistance or operating costs under other HUD programs. The current regulation provides that housing is not eligible for assistance if it is, or has been within 12 months before the Owner submits a proposal, subsidized under any Federal housing program. A number of nonprofit organizations and PHAs have requested clarification of the term ''subsidized,'' and have indicated that the 12-month restriction eliminates a number of otherwise excellent facilities from consideration for SRO assistance. In response to these comments, HUD is revising this provision by adopting the clearer, less restrictive standard used in its Shelter Plus Care program. Under the revised standard, there is no restriction on the use of other Federal funding for acquisition and rehabilitation costs.

Fifth, this interim rule eliminates an obsolete date reference in the provisions for determining the maximum amount of rehabilitation allowable in the program. Although § 882.805(g)(1)(ii)(A) provides that the rehabilitation cost calculation should use the HUD-approved High Cost Percentage for Base Cities in use before April 1988, HUD recalculates this percentage periodically. Therefore, this interim rule will eliminate the date reference so that a more recent percentage can be used.

Finally, this interim rule corrects an error in a final rule published in the Federal Register on June 6, 1994 (59 FR 29326). That rule, which conformed HUD's regulations with the requirements of the Uniform Relocation Assistance and Real Property Acquisition Policies Act of 1970, as amended, and its implementing regulations at 49 CFR part 24, added

§ 882.810 and intended to remove much of § 882.803(d). However, the most recent codification of part 882 (April 1, 1995) included both § 882.810 and § 882.803(d) in its entirety. Therefore, in order to correct the error, this rule removes much of § 882.803(d).

Justification for Interim Rulemaking

HUD generally publishes a rule for public comment before issuing a rule for effect, in accordance with its regulations on rulemaking at 24 CFR part 10. However, part 10 provides that prior public procedure will be omitted if HUD determines that it is ''impracticable, unnecessary, or contrary to the public interest'' (24 CFR 10.1). With this interim rule, HUD is merely correcting several minor oversights and conforming the SRO regulations to statutory or regulatory provisions that are already effective. Therefore, HUD finds that prior public procedure would be unnecessary. However, HUD is inviting public comments for 60 days, after which it will consider the relevant issues raised by the commenters in developing a final rule.

Other Matters

Environmental Impact

A Finding of No Significant Impact with respect to the environment has been made in accordance with HUD regulations at 24 CFR part 50, which implement section 102(2)(C) of the National Environmental Policy Act of 1969 (42 U.S.C. 4332). The finding is available for public inspection between 7:30 a.m. and 5:30 p.m. weekdays in the Office of the Rules Docket Clerk, Office of the General Counsel, Department of Housing and Urban Development, Room 10276, 451 Seventh Street SW, Washington, DC 20410.

Executive Order 12606, The Family

The General Counsel, as the designated official under Executive Order 12606, *The Family*, has determined that this interim rule does not have potential for significant impact on family formation, maintenance, and general well-being. To the extent that this interim rule benefits homeless individuals, it would benefit the families of such individuals. Since any effect of the interim rule would be beneficial, this interim rule is not subject to review under the Order.

Executive Order 12612, Federalism

The General Counsel, as the Designated Official under section 6(a) of Executive Order 12612, *Federalism*, has determined that the policies in this interim rule will not have substantial direct effects on States or their political subdivisions, or the relationship between the Federal Government and the States, or on the distribution of power and responsibilities among the various levels of government. This interim rule is limited to conforming the regulations with statutory and regulatory requirements. Therefore the interim rule is not subject to review under the Order.

Regulatory Flexibility Act

The Secretary, in accordance with the Regulatory Flexibility Act (5 U.S.C. 605(b)), has reviewed this interim rule before publication and by approving it certifies that this interim rule does not have a significant economic impact on a substantial number of small entities. Specifically, the interim rule is limited to making conforming changes to the program regulations.

List of Subjects in 24 CFR Part 882

Grant programs—housing and community development, Homeless, Lead poisoning, Manufactured homes, Rent subsidies, Reporting and recordkeeping requirements.

Accordingly, 24 CFR part 882 is amended as follows:

PART 882—SECTION 8 CERTIFICATE AND MODERATE REHABILITATION PROGRAMS

1. The authority citation for part 882 continues to read as follows:

Authority: 42 U.S.C. 1437f and 3535(d).

2. Section 882.802 is amended by adding definitions for the terms ''applicant'' and ''private nonprofit organization'' in alphabetical order, to read as follows:

§ 882.802 Definitions.

* * * * *

Applicant. A public housing agency or Indian housing authority (collectively referred to as housing agencies or HAs), or a private nonprofit organization that applies for assistance under this program. HUD will require private nonprofit applicants to subcontract with public housing agencies to administer their rental assistance.

* * * * *

Private nonprofit organization. An organization, no part of the net earnings of which inures to the benefit of any member, founder, contributor, or individual. The organization must:

(1) Have a voluntary board;

(2) Have a functioning accounting system that is operated in accordance with generally accepted accounting principles, or designate an entity that will maintain a functioning accounting system for the organization in accordance with generally accepted accounting principles; and

(3) Practice nondiscrimination in the provision of assistance.

* * * * *

3. Section 882.803 is amended by revising paragraphs (a)(2) and (d) to read as follows:

§ 882.803 Project eligibility and other requirements.

(a) * * *

(2) Housing is not eligible for assistance under this program if it is receiving Federal funding for rental assistance or operating costs under other HUD programs.

* * * * *

(d) *Relocation.* A project assisted under this subpart H is subject to the requirements of § 882.810.

* * * * *

4. Section 882.804 is amended by revising paragraph (d) to read as follows:

§ 882.804 Other Federal requirements.

* * * * *

(d) The environmental review requirements of 24 CFR part 58, implementing the National Environmental Policy Act and related environmental laws and authorities listed in 24 CFR 58.5, are applicable to this program.

5. Section 882.805 is amended by removing and reserving paragraph (d), and by revising paragraph (g)(1)(ii)(A) to read as follows:

§ 882.805 PHA application process, HUD review and selection, ACC execution, and pre-rehabilitation activities.

* * * * *

(d) [Reserved]

* * * * *

(g) * * *

(1) * * *

(ii) * * *

(A) HUD may approve a higher per unit amount up to, but not to exceed, an amount computed by multiplying the HUD-approved High Cost Percentage for Base Cities (used for computing FHA high cost area adjustments) for the area, by the current published cost limitation plus the cost of the required fire and safety improvements.

* * * * *

6. Section 882.808 is amended by:

a. Revising paragraph (a)(1);

b. Removing paragraphs (a)(3), (b)(2), and (b)(4);

c. Redesignating paragraph (a)(4) as paragraph (a)(3) and revising it;

d. Redesignating paragraph (b)(3) as paragraph (b)(2);

e. Redesignating paragraphs (b)(5) through (b)(7) as paragraphs (b)(3) through (b)(5), respectively; and

f. Adding a new paragraph (q), to read as follows:

§ 882.808 Management.

(a) *Outreach to homeless individuals and appropriate organizations.* (1) The HA or the Owner shall undertake outreach efforts to homeless individuals so that they may be brought into the program. The outreach effort should include notification to emergency shelter providers and other organizations that could provide referrals of homeless individuals. In cases where the owner conducts the outreach effort, the HA shall be notified so that it may provide referrals of homeless individuals.

* * * * *

(3) *First priority for homeless individuals.* Homeless individuals shall have a first priority for occupancy of housing rehabilitated under this program.

* * * * *

(q) *Participation of homeless individuals.* (1) Each approved applicant receiving assistance under this program, except HAs, shall provide for the participation of not less than one homeless individual or formerly homeless individual on the board of directors or other equivalent policymaking entity of such applicant, to the extent that the entity considers and makes policies and decisions regarding the rehabilitation of any housing with assistance under this subpart. This requirement is waived if the applicant is unable to meet this requirement and presents a plan that HUD approves to consult with homeless or formerly homeless individuals in considering and making such policies and decisions.

(2) To the maximum extent practicable, each approved applicant must involve homeless individuals and families, through employment, volunteer services, or otherwise, in rehabilitating and operating facilities assisted under this subpart, and in providing services for occupants of such facilities.

Dated: January 18, 1996.

Andrew M. Cuomo,

Assistant Secretary for Community Planning and Development.

[FR Doc. 96–3275 Filed 2–13–96; 8:45 am]

BILLING CODE 4210–29–P

federal register

Wednesday
February 14, 1996

Part V

Department of Housing and Urban Development

Office of the General Counsel

Reports of Lobbying Information Filed for 1994 Under Section 112 of the HUD Reform Act of 1989; Notice

DEPARTMENT OF HOUSING AND URBAN DEVELOPMENT

Office of the General Counsel

[Docket No. FR–4008–N–01]

Reports of Lobbying Information Filed for 1994 Under Section 112 of the HUD Reform Act of 1989

AGENCY: Office of the General Counsel, HUD.

ACTION: Notice.

SUMMARY: The Department of Housing and Urban Development is publishing a compilation of reports of lobbying information and registrations submitted to the Department under Section 112 of the Department of Housing and Urban Development Reform Act of 1989, Public Law 101–235.

FOR FURTHER INFORMATION CONTACT: Aaron Santa Anna, Assistant General Counsel, Ethics Law Division, Department of Housing and Urban Development, 451 7th Street, room 2158, S.W., Washington, DC 20410. Telephone (202) 708–3815; TDD (202) 708–3815. (These are not toll-free numbers.) Questions regarding this report should be submitted in writing to the above address.

SUPPLEMENTARY INFORMATION: Section 112 of the Department of Housing and Urban Development Reform Act of 1989, Public Law 101–235, approved December 15, 1989, added section 13 to the Department of Housing and Urban Development Act, (42 U.S.C. 3531, *et seq.*). Section 112 required the Department to, among other things, compile and publish expenditure and registration information filed with the Department during each calendar year. Section 112 was repealed, however, by Sections 11(b)(1) and 24(a) of the Lobbying Disclosure Act of 1995 (Pub. L. 104–65, approved December 19, 1995). Nevertheless, the Department has determined, consistent with the intent of the Department of Housing and Urban Development Reform Act and the Lobbying Disclosure Act, that public disclosure of the identity of paid lobbyists will increase public confidence in the integrity of the Government. As a result, the Department is making this information available to the public.

The information contained in Appendices A through D of this notice reflects registrations and reports submitted to the Department for calendar year 1994. This notice does not involve analysis or make inferences from the information provided.

Appendix A is the annual report of persons making expenditures for lobbying activities.

Appendix B is the annual report of persons receiving payment for lobbying activities.

Appendix C is a list of individuals who registered as lobbyists under Section 112.

Appendix D is a list of entities who registered as lobbyists under Section 112.

Dated: February 6, 1996.

Nelson A. Díaz,

General Counsel.

BILLING CODE 4210–01–M

Appendix A

03/28/1995

Lobbyist & Consultant Activity
Annual Report of "Persons" Making Expenditures for Lobbying Activities
Form HUD-2883 For Calendar Year 1994

Page 1

Registrant Name and Address	To Whom Paid	Date of Agreement / Date of Expenditure	Amount / Amount
CARABETTA MANAGEMENT COMPANY ATTENTION: JOSEPH F. CARABETTA 200 PRATT STREET MERIDEN, CT 06450	THE MARCUS LAW FIRM 111 WHITNEY AVENUE NEW HAVEN, CT 06510 Federal Action No.: AUDIT 93-BO-214-1013	10/22/93 10/22/93	$ 45,000.00 $ 5,000.00
	THE MARCUS LAW FIRM 111 WHITNEY AVENUE NEW HAVEN, CT 06510 Federal Action No.: AUDIT 93-BO-214-1013	10/22/93 10/25/93	$ 45,000.00 $ 2,500.00
	THE MARCUS LAW FIRM 111 WHITNEY AVENUE NEW HAVEN, CT 06510 Federal Action No.: AUDIT 93-BO-214-1013	10/22/93 10/27/93	$ 45,000.00 $ 5,000.00
	THE MARCUS LAW FIRM 111 WHITNEY AVENUE NEW HAVEN, CT 06510 Federal Action No.: AUDIT 93-BO-214-1013	10/22/93 12/08/93	$ 45,000.00 $ 2,500.00
ALL STATE MANAGEMENT COMPANY, INC. TR ASSOCIATES WESTERN HILLS LTD PARTNERSHIP 1650 KENDALE BOULEVARD, SUITE 200 EAST LANSING, MI 48823	HONIGMAN MILLER SCHWARTZ AND COHN 2290 FIRST NATIONAL BUILDING 660 WOODWARD AVENUE DETROIT, MI 48226 Federal Action No.: 044-92010	11/01/94 12/01/94	$ 7,300.40 $ 4,511.25
	PLANTE AND MORAN ATTENTION: WILLIAM DOYLE 27400 NORTHWESTERN HIGHWAY SOUTHFIELD, MI 48037 Federal Action No.:	11/01/94 / /	$ 1,890.00
BOROUGH OF TAMAQUA MUNICIPAL BUILDING 320 EAST BROAD STREET TAMAQUA, PA 18252	BALLARD SPAHR ANDREWS & INGERSOLL 555 13TH STREET, NW SUITE 900 EAST WASHINGTON, DC 20004 Federal Action No.: PA-16-11/P-73-008	11/08/93 12/31/94	$ 16,000.00 $ 4,000.00
BREWBROOK LIMITED PARTNERSHIP 111 WATER STREET SUITE 210 BALTIMORE, MD 21202	KROOTH AND ALTMAN 2101 L STREET, NW SUITE 210 WASHINGTON, DC 20037 Federal Action No.:	01/01/94 12/31/94	$ 6,379.30
G & K MANAGEMENT COMPANY, INC. 5150 OVERLAND AVENUE P.O. BOX 3623 CULVER CITY, CA 90230	FRIED FRANK HARRIS SHRIVER & JACOBSON 1001 PENNSYLVANIA AVENUE, NW SUITE 800 WASHINGTON, DC 20004-2505 Federal Action No.: B-87-AA-06-0619	07/14/86 01/04/94	$ 17,803.82
	FRIED FRANK HARRIS SHRIVER & JACOBSON 1001 PENNSYLVANIA AVENUE, NW SUITE 800 WASHINGTON, DC 20004-2505 Federal Action No.: B-87-AA-06-0619	07/14/86 12/09/94	$ 33,605.22
	FRIED FRANK HARRIS SHRIVER & JACOBSON 1001 PENNSYLVANIA AVENUE, NW SUITE 800 WASHINGTON, DC 20004-2505 Federal Action No.: B-87-AA-06-0619	07/14/86 11/21/94	$ 7,135.12
MILLER AND SCHROEDER FINANCIAL, INC. 220 SOUTH SIXTH STREET SUITE 300 MINNEAPOLIS, MN 55402	KROOTH AND ALTMAN 2101 L STREET, NW SUITE 210 WASHINGTON, DC 20037 Federal Action No.: HAP NY-02-0034004	03/03/93 03/10/94	$ 10,300.00 $ 10,300.00
NATIONAL HEALTH MANAGEMENT, INC. 4415 5TH AVENUE PITTSBURGH, PA 15213	HESSEL AND ALUISE, P.C. ONE THOMAS CIRCLE, NW SUITE 1250 WASHINGTON, DC 20005 Federal Action No.: 066-94013	/ / 12/31/94	$ 36,000.00
PRESBYTERIAN ASSOCIATION ON AGING 1215 HULTON ROAD OAKMONT, PA 15139-1196	COAN & LYONS 1100 CONNECTICUT AVENUE, NW SUITE 1000 WASHINGTON, DC 20036 Federal Action No.:	/ / 01/17/94	$ 2,737.39
	COAN & LYONS 1100 CONNECTICUT AVENUE, NW SUITE 1000 WASHINGTON, DC 20036 Federal Action No.:	/ / 04/30/94	$ 43.75
	COAN & LYONS 1100 CONNECTICUT AVENUE, NW SUITE 1000 WASHINGTON, DC 20036 Federal Action No.:	/ / 07/31/94	$ 6,555.04
	COAN & LYONS 1100 CONNECTICUT AVENUE, NW SUITE 1000 WASHINGTON, DC 20036 Federal Action No.:	/ / 08/17/94	$ 7,500.00
	COAN & LYONS 1100 CONNECTICUT AVENUE, NW SUITE 1000 WASHINGTON, DC 20036 Federal Action No.:	/ / 08/31/94	$ 2,488.74
	COAN & LYONS 1100 CONNECTICUT AVENUE, NW SUITE 1000 WASHINGTON, DC 20036 Federal Action No.:	/ / 10/15/94	$ 17,621.11
REYNOLDS METALS COMPANY ATTENTION: FRANKLIN R. ELLSWORTH, JR. 6601 WEST BROAD STREET RICHMOND, VA 23230-1701	KROOTH & ALTMAN 1850 M STREET, NW SUITE 400 WASHINGTON, DC 20036-5803 Federal Action No.: 067-94027	03/23/93 12/31/94	$ 30,000.00 $ 8,879.16

03/28/1995 Form HUD-2883 For Calendar Year 1994 Page 2

REYNOLDS METALS COMPANY ATTENTION: FRANKLIN R. ELLSWORTH, JR. 6601 WEST BROAD STREET RICHMOND, VA 23230-1701	KROOTH & ALTMAN 1850 M STREET, NW SUITE 400 WASHINGTON, DC 20036-5803 Federal Action No.: 067-94026	03/23/93 12/31/94	$ 30,000.00 $ 8,879.15
REYNOLDS METALS COMPANY ATTENTION: FRANKLIN R. ELLSWORTH, JR. 6601 WEST BROAD STREET RICHMOND, VA 23230-1701	KROOTH & ALTMAN 1850 M STREET, NW SUITE 400 WASHINGTON DC 20036-5803 Federal Action No.: 063-36601	08/21/92 08/01/93	$ 30,000.00 $ 22,000.00
ST. LOUIS DEVELOPMENT CORPORATION 330 N. 15TH ST. ST. LOUIS, MO 63103	JIM BROWN AND ASSOCIATES THE PARK PLAZA SUITE 202 232 N. KINGS HIGHWAY ST. LOUIS, MO 63108 Federal Action No.: CITY OF ST. LOUIS	04/01/94 12/31/94	$ 24,000.00 $ 24,000.00

03/28/1995

Lobbyist & Consultant Activity
Annual Report of "Person" Receiving Payment For Lobbying Activities
Form HUD-2882-B For Calendar Year 1994

Page 1

Registrant Name and Business Address	Report of Money or Other thing of Value Received for Lobbying: Person Making Payment	Amount	Report of Money or Other Thing of Value Expended for Lobbying: Person Being Paid	Amount
THE MARCUS LAW FIRM 111 WHITNEY AVENUE NEW HAVEN, CT 06510	CARABETTA MANAGEMENT COMPANY ATTENTION: JOSEPH F. CARABETTA 200 PRATT STREET MERIDEN, CT 06450 Federal Action No.: AUDIT 93-BO-214-1013 Purpose: NEGOTIATE WAIVER/REDUCTION OF PENALTY IMPOSED AND START TIME FOR RENT INCREASES	$ 15,000.00		
BALLARD SPAHR ANDREWS & INGERSOLL 555 13TH STREET, NW SUITE 900 EAST WASHINGTON, DC 20004	AMERICAN MORTGAGES INC. 7200 WISCONSIN AVENUE SUITE 200 BETHESDA MD 20814 Federal Action No.: Purpose: LEGAL SERVICES	$ 21,764.00		
	PATRICIAN MORTGAGE COMPANY 4800 MONTGOMERY LANE SUITE 200 BETHESDA MD 20814 Federal Action No.: Purpose: LEGAL SERVICES	$ 14,207.50		
	BOROUGH OF TAMAQUA MUNICIPAL BUILDING 320 EAST BROAD STREET TAMAQUA, PA 18252 Federal Action No.: PA-16-11/P-73-008 Purpose: LEGAL SERVICES	$ 16,000.00		
COAN & LYONS 1100 CONNECTICUT AVENUE, NW SUITE 1000 WASHINGTON, DC 20036	CORAOPOLIS GARDENS HOUSING PARTNERSHIP ATTENTION: ANTHONY M. RODRIGUEZ, G.P. 641 WEST MARKET STREET AKRON, OH 44303 Federal Action No.: 033-35146 Purpose: PROJECT PARTICIPATION IN REFUNDING SAVINGS	$ 4,796.20		
	VERONA GARDENS HOUSING PARTNERSHIP ATTENTION: ANTHONY M. RODRIGUEZ, G.P. 641 WEST MARKET STREET AKRON, OH 44303 Federal Action No.: 033-35147 Purpose: PROJECT PARTICIPATION IN REFUNDING SAVINGS	$ 5,744.91		
	PRESBYTERIAN ASSOCIATION ON AGING 1215 HULTON ROAD OAKMONT, PA 15139-1196 Federal Action No.: 033-43054 Purpose: REFUNDING OF BONDS WITH A DEBENTURE LOCK; WORKOUT OF MORTGAGE DEFAULT THROUGH A REASSIGNMENT OF MORTGAGE IN CONNECTION WITH REFUNDING OF BONDS	$ 37,835.59		
	SOUTHWESTERN REAL ESTATE SERVICES, INC. 2121 W. SPRING CREEK PARKWAY SUITE 224 PLANO, TX 75023-4181 Federal Action No.: 112-94008 Purpose: WORKOUT OF MORTGAGE DEFAULT	$ 1,169.67		
FRIED FRANK HARRIS SHRIVER & JACOBSON 1001 PENNSYLVANIA AVENUE, NW SUITE 800 WASHINGTON, DC 20004-2505	FEDERAL NATIONAL MORTGAGE ASSOCIATION 3900 WISCONSIN AVENUE, NW WASHINGTON, DC 20016 Federal Action No.: Purpose: USE OF GNMA GUARANTEES IN FNMA REMICS	$ 60,034.20		
	WARNER THEATRE ASSOCIATES, L.P. THE KAEMPFER COMPANY 1150 18TH STREET, NW WASHINGTON, DC 20036 Federal Action No.: B-85-AA-11-0031 Purpose: GRANT AGREEMENT AMENDMENT	$ 3,036.08		
	G & K MANAGEMENT COMPANY, INC. 5150 OVERLAND AVENUE P.O. BOX 3623 CULVER CITY, CA 90230 Federal Action No.: B-87-AA-06-0619 Purpose: GRANT AGREEMENT AMENDMENTS AND EVIDENTIARY MATERIALS	$ 58,544.16		

FRIED FRANK HARRIS SHRIVER & JACOBSON (Continued)	JOGO ASSOCIATES G&K MANAGEMENT COMPANY, INC. 5150 OVERLAND AVENUE CULVER CITY, CA 90230 Federal Action No.: FHA 112-35069 Purpose: SEEKING TO NEGOTIATE WORKOUT TO AVOID FORECLOSURE	$ 276.50
HESSEL AND ALUISE, P.C. 1050 17TH STREET, NW SUITE 900 WASHINGTON, DC 20036	INTERSTATE REALTY MANAGEMENT COMPANY 1 EAST STOW ROAD P.O. BOX 994 MARLTON, NJ 08053-0994 Federal Action No.: AUDIT 92-TS-214-1015 Purpose: RESOLVE AUDIT	$ 1,632.00
	KENYON, L.P. 1218 CHESTNUT STREET SUITE 605 PHILADELPHIA, PA 19107 Federal Action No.: FHA 000-35301-PM/L8 Purpose: TPA	$ 120.00
	1312 EUCLID, L.P. 1218 CHESTNUT STREET SUITE 605 PHILADELPHIA, PA 19107 Federal Action No.: FHA 000-35302-PM/L8 Purpose: TPA	$ 120.00
	HALLMARK PROPERTIES, LTD. 2951 TEWNTY EIGHTH ST. SUITE 2040 SANTA MONICA, CA 90405 Federal Action No.: FHA 031-32014 Purpose: MORTGAGE WORKOUT	$ 2,585.00
	FRONT ROYAL ASSOCIATES LP 11300 ROCKVILLE PIKE SUITE 500 ROCKVILLE, MD 20852 Federal Action No.: FHA 051-44161-LD Purpose: EXTEND SECTION 8 CONTRACT	$ 7,132.50
	MELLON MORTGAGE COMPANY TWO MELLON BANK CENTER SUITE M-70 PITTSBURGH, PA 15259 Federal Action No.: FHA 054-11013 Purpose: FHA INSURANCE COMMITMENT APPROVAL	$ 600.00
	NATIONAL HEALTH MANAGEMENT, INC. 4415 5TH AVENUE PITTSBURGH, PA 15213 Federal Action No.: FHA 066-94013 Purpose: MORTGAGE WORKOUT	$ 36,000.00
	WILDER RICHMAN CORPORATION 10 VALLEY DRIVE GREENWICH, CT 06831 Federal Action No.: FHA 073-35316-PM Purpose: MORTGAGE WORKOUT	$ 1,404.00
BROWNSTEIN ZEIDMAN AND LORE 1401 NEW YORK AVENUE, NW SUITE 900 WASHINGTON, DC 20005-2102	THE SHELTER GROUP HILLTOP GARDENS 218 NORTH CHARLES STREET, SUITE 500 BALTIMORE, MD 21201 Federal Action No.: 000-94003 Purpose: OBTAIN HUD'S AGREEMENT TO HOLD PURCHASER OF HUD-OWNED PROJECT HARMLESS REGARDING ENVIRONMENTAL COSTS	$ 1,297.00
	STARRETT HOUSING CORPORATION 909 THIRD AVENUE NEW YORK, NY 10022 Federal Action No.: 012-11088 Purpose: SEEK APPROVAL OF PLAN OF ACTION UNDER LIHPRHA IN CONNECTION WITH THE TOWER WEST PROJECT	$ 3,894.00
	TOWNE HOUSE VILLAGE NORTH OWNERS, INC. ATTENTION: GRAHME FISCHER 250 VILLAGE DRIVE HAUPPAUGE, NY 11788 Federal Action No.: 012-11206 Purpose: SEEK HUD APPROVAL OF REGULATORY AGREEMENT AMENDMENTS	$ 992.50

BROWNSTEIN ZEIDMAN AND LORE
(Continued)

NEW YORK CITY HOUSING DEVELOPMENT CORPORATION $ 2,579.84
75 MAIDEN LANE, 8TH FLOOR
NEW YORK, NY 10038
Federal Action No.: 012-129 NI
Purpose: TO OBTAIN HUD'S CONSENT FOR USE OF EXCESS SECTION 236 FUNDS FROM A REFUNDING FOR GENERAL HDC HOUSING PROGRAMS

THE PRESBYTERIAN HOSPITAL IN THE CITY OF NY $ 505.75
ATTENTION: HARRY J. BOLWELL, PRESIDENT
COLUMBIA-PRESBYTERIAN MEDICAL CENTER
NEW YORK, NY 10032-3784
Federal Action No.: 012-13040
Purpose: ASSIST WITH MORTGAGE

THE PRESBYTERIAN HOSPITAL IN THE CITY OF NY $ 505.75
ATTENTION: HARRY J. BOLWELL, PRESIDENT
COLUMBIA-PRESBYTERIAN MEDICAL CENTER
NEW YORK, NY 10032-3784
Federal Action No.: 012-13042
Purpose: ASSIST WITH MORTGAGE

ROOSEVELT ISLAND ASSOCIATES $ 226.00
STARRETT HOUSING CORPORATION
909 THIRD AVENUE, 16TH FLOOR
NEW YORK, NY 10022
Federal Action No.: 012-32267
Purpose: SEEK HUD APPROVAL OF DEFAULT REFINANCING MORTGAGE MODIFICATION, AND MODIFICATION OF OPERATING DEFICIT ESCROW AGREEMENT

AMERICAN PROPERTY FINANCING, INC. $ 330.22
135 EAST 57TH STREET
20TH FLOOR
NEW YORK, NY 10022
Federal Action No.: 012-35586
Purpose: SEEK HUD APPROVAL OF LOAN RESTRUCTURING

THE BRODSKY ORGANIZATION $ 1,391.13
ATTENTION: DANIEL BRODSKY
425 WEST 59TH STREET
NEW YORK, NY 10019
Federal Action No.: 012-35632
Purpose: TO OBTAIN HUD APPROVAL FOR AMENDMENT TO ESCROW AGREEMENTS REGARDING PAYMENT OF INTEREST TO MORTGAGOR

NATIONAL HOUSING PARTNERSHIP, INC. $ 95.00
1225 EYE STREET, NW
WASHINGTON, DC 20005
Federal Action No.: 012-55018
Purpose: OBTAIN HUD'S ACKNOWLEDGEMENT THAT THE OWNER MAY DISSOLVE THE RESIDUAL RECEIPTS ACCOUNT

LOEB AND LOEB $ 699.00
ATTENTION: FREDRIC M. SANDERS
345 PARK AVENUE
NEW YORK, NY 10154
Federal Action No.: 017-38034
Purpose: SEEK HUD APPROVAL FOR THE RELEASE OF SURPLUS CASH TO LIMITED PARTNERS

MARLBORO APARTMENT CORPORATION $ 408.00
ATTENTION: JOSEPH TORRE, PRESIDENT
265 MAIN STREET
RICHFIELD PARK, NJ 07660
Federal Action No.: 031-11042
Purpose: SEEK HUD POSITION REGARDING UNDERWRITING STANDARDS FOR REFINANCING

FOREST CITY RESIDENTIAL DEVELOPMENT $ 203.50
10800 BROOKPARK ROAD
CLEVELAND, OH 44130
Federal Action No.: 043-11001
Purpose: SEEK HUD RETROACTIVE EXTENSION OF DEADLINE FOR ELECTING TO ASSIGN MORTGAGE

PARK CHARLES $ 167.50
THE SHELTER GROUP
218 NORTH CHARLES STREET
BALTIMORE, MD 21201
Federal Action No.: 052-32035
Purpose: SEEK HUD APPROVAL OF LOAN WORKOUT OR SOME OTHER RESTRUCTURING OF THE PROJECT

BROWNSTEIN ZEIDMAN AND LORE (Continued)	LIBERTY TAX CREDIT PLUS, L.P. 625 MADISON AVENUE NEW YORK, NY 10022 Federal Action No.: 061-94039 Purpose: SEEK HUD APPROVAL OF LOAN WORKOUT	$ 935.00
	SHERIDAN ROAD LIFESTYLE PARTNERSHIP ATTENTION: WILLIAM KAPLAN 737 N. MICHIGAN, SUITE 900 CHICAGO, IL 60611 Federal Action No.: 071-94013 Purpose: OBTAIN A HUD COMMITMENT ON A SECTION 223(A) LOAN	$ 195.50
	ESCONDIDO RETIREMENT CENTER THE BANK OF NEW YORK 1 WALL STREET, 15TH FLOOR - LEGAL DEPARTMENT NEW YORK, NY 10286 Federal Action No.: 129-35082 Purpose: NEGOTIATIONS WITH HUD REGARDING PAYMENT	$ 1,579.25
HOLLAND AND KNIGHT 2100 PENNSYLVANIA AVENUE, NW SUITE 400 WASHINGTON, DC 20037-3202	NATIONAL CORPORATION FOR HOUSING PARTNERSHIP 1225 EYE STREET, NW WASHINGTON, DC 20005 Federal Action No.: Purpose: 2530 CLEARANCES	$ 442.00
	NATIONAL CORPORATION FOR HOUSING PARTNERSHIP 1225 EYE STREET, NW WASHINGTON, DC 20005 Federal Action No.: Purpose: OXFORD - HUD/FHA	$ 8,555.00
	COTTINGTON ROAD, L.P. TRISTAR MANAGEMENT, INC. 40 YORK ROAD, SUITE 200 TOWSON, MD 21204 Federal Action No.: Purpose: BOND REFUNDER	$ 900.00
	WHITEHALL FUNDING CORPORATION 2125 EASTERN AVENUE DAVENPORT, IA 52806 Federal Action No.: Purpose: ASSIGNMENT OF HUD/FHA MORTGAGE	$ 1,206.00
	135 W. KINGSBRIDGE ASSOCIATES TIME EQUITIES, INC. 55 FIFTH AVENUE NEW YORK, NY 10003 Federal Action No.: FHA 012-94004 Purpose: MORTGAGE MODIFICATION AND GNMA REISSUANCE	$ 2,250.00
	ELK INVESTORS 641 LEXINGTON AVENUE NEW YORK, NY 10022 Federal Action No.: FHA 017-35048 Purpose: PROSPECTIVE PURCHASE OF PROJECT/PARTIAL PAYMENT OF CLAIM	$ 120.00
	BOSTON FINANCIAL ASSET MANAGEMENT SPEARSWOOD APARTMENTS, LTD. 101 ARCH STREET BOSTON, MA 02110-1106 Federal Action No.: FHA 062-36610 Purpose: FHA MORTGAGE MODIFICATIONS/GNMA SECURITIES REISSUANCE	$ 2,870.00
	WHITEHALL FUNDING CORPORATION 2125 EASTERN AVENUE DAVENPORT, IA 52806 Federal Action No.: FHA 071-36625 Purpose: ASSIGNMENT OF HUD COINSURED LOAN AND MORTGAGE WORKOUT	$ 1,717.00
	TERRACE LAKES APARTMENTS MELLON MORTGAGE COMPANY 1422 EUCLID AVENUE, SUITE 900 CLEVELAND, OH 44115-2092 Federal Action No.: FHA 071-94012 Purpose: FHA MORTGAGE MODIFICATION AND GNMA SECURITY REISSUANCE	$ 2,196.50
	MILTON EHRLICH COMPANY LOCKWOOD VILLAGE 18 EAST 22ND STREET NEW YORK, NY 10010 Federal Action No.: LOCKWOOD VILLAGE Purpose: MORTGAGE MODIFICATION	$ 1,472.50

HOLLAND AND KNIGHT
(Continued)

HRC DEVELOPMENT $ 1,029.94
ATTENTION: LYNDEL J. WISHCAMPER
177 HIGH STREET
PORTLAND, ME 04101
Federal Action No.: ME36-H017-357
Purpose: SALE OF PROJECTS/HUD ISSUES

HONIGMAN MILLER SCHWARTZ AND COHN
2290 FIRST NATIONAL BUILDING
660 WOODWARD AVENUE
DETROIT, MI 48226

HEMPHILL ROAD PROPERTIES $ 8,500.00
4400 KINGSLANE
BURTON, MI 48529
Federal Action No.: 048-94008
Purpose: NEGOTIATE LOAN MODIFICATION IN ORDER TO REDUCE INTEREST RATE

BENEFICIAL PROPERTY CORPORATION $ 833.33
15770 N. DALLAS PARKWAY
SUITE 902
DALLAS, TX 75248
Federal Action No.: 136-35546
Purpose: PREPARE TRANSFER OF ASSETS APPLICATION AND PROPOSED WORKOUT AGREEMENT; CLIENT NOT IN DEFAULT, BUT IS PROPOSED PURCHASER

BENEFICIAL PROPERTY CORPORATION $ 833.33
15770 N. DALLAS PARKWAY
SUITE 902
DALLAS, TX 75248
Federal Action No.: 136-35547
Purpose: PREPARE TRANSFER OF ASSETS APPLICATION AND PROPOSED WORKOUT AGREEMENT; CLIENT NOT IN DEFAULT, BUT IS PROPOSED PURCHASER

BENEFICIAL PROPERTY CORPORATION $ 833.33
15770 N. DALLAS PARKWAY
SUITE 902
DALLAS, TX 75248
Federal Action No.: 136-35600
Purpose: PREPARE TRANSFER OF ASSETS APPLICATION AND PROPOSED WORKOUT AGREEMENT; CLIENT NOT IN DEFAULT, BUT IS PROPOSED PURCHASER

BENEFICIAL PROPERTY CORPORATION $ 2,500.00
15770 N. DALLAS PARKWAY
SUITE 902
DALLAS, TX 75248
Federal Action No.: 143-35030
Purpose: PREPARE TRANSFER OF ASSETS APPLICATION AND PROPOSED WORKOUT AGREEMENT; CLIENT NOT IN DEFAULT, BUT IS PROPOSED PURCHASER

POWELL GOLDSTEIN FRAZER & MURPHY
1001 PENNSYLVANIA AVENUE, NW
SUITE 600
WASHINGTON, DC 20004

LAUREL CROSSING ASSOCIATES, L.P. $ 20,000.00
7200 WISCONSIN AVENUE
SUITE 1006
BETHESDA, MD 20814
Federal Action No.: 000-94006
Purpose: MORTGAGE MODIFICATION, BOND REFUNDING

RFI ASSOCIATES $ 20,000.00
ARTERY PLAZA
7200 WISCONSIN AVENUE, SUITE 1006
BETHESDA, MD 20814
Federal Action No.: 000-94136
Purpose: MORTGAGE MODIFICATION

CAPITAL CROSSING ASSOCIATES, L.P. $ 20,000.00
7200 WISCONSIN AVENUE
SUITE 1006
BETHESDA, MD 20814
Federal Action No.: 000-94136
Purpose: MORTGAGE MODIFICATION

LANDSMAN DEVELOPMENT CORPORATION $ 45,511.12
200 CANAL VIEW BOULEVARD
ROCHESTER, NY 14623
Federal Action No.: 014-16NI
Purpose: SECTION 236 BOND REFUNDING

THE ASPEN GROUP, INC. $ 2,875.21
WORLD TRADE CENTER
SUITE 318
SAN FRANCISCO, CA 94111
Federal Action No.: 031-55007 AND 031-55016
Purpose: EXTENSION OF OCCUPANCY RESTRICTIONS

)OWELL GOLDSTEIN FRAZER & MURPHY (Continued)	CROSLAND PROPERTIES P.O. BOX 11797 135 SCALEYBARK ROAD CHARLOTTE, NC 28209 Federal Action No.: 053-35491 Purpose: MORTGAGE REASSIGNMENT, MODIFICATION	$ 25,081.85
	LINCOLN PROPERTY COMPANY, LTD. 310 N. WESTLAKE BOULEVARD, SUITE 200 WESTLAKE VILLAGE, CA 91362 Federal Action No.: 054-35460 Purpose: MORTGAGE REASSIGNMENT	$ 12,911.47
	MORAN AND COMPANY 200 WEST MADISON SUITE 2700 CHICAGO, IL 60606 Federal Action No.: 071-00259 Purpose: SECTION 223(F) REFINANCING	$ 8,306.00
	RICHCRAINE CORPORATION ATTENTION: JEOFFREY A. MEACHAM P.O. BOX 35617 LOS GATOS, CA 95030 Federal Action No.: 105-44009 Purpose: TRANSFER OF PHYSICAL ASSETS, SECTION 8 RENEWAL	$ 1,000.00
	DANMOUR AND ASSOCIATES 11730 GATEWAY BOULEVARD WEST LOS ANGELES, CA 90064 Federal Action No.: 112-35052 Purpose: MORTGAGE MODIFICATION	$ 1,889.98
	THE RELATED COMPANIES 625 MADISON AVENUE NEW YORK, NY 10022 Federal Action No.: 114-35195 Purpose: MORTGAGE RELIEF	$ 4,327.82
	DANMOUR AND ASSOCIATES 11730 GATEWAY BOULEVARD WEST LOS ANGELES, CA 90064 Federal Action No.: 122-55036 Purpose: PLAN OF ACTION MODIFICATION	$ 1,394.79
	THE PATRICIAN FINANCIAL COMPANY 4800 MONTGOMERY LANE SUITE 200 BETHESDA, MD 20814 Federal Action No.: GNMA CS MSF 700658C Purpose: ISSUER APPROVAL	$ 270.70
	BAYBANK BAYBANK TOWER 1500 MAIN STREET SPRINGFIELD, MA 01115 Federal Action No.: MA06-K052-013 Purpose: MODERATE REHABILITATION CONTRACT RENT REDUCTION	$ 1,498.56
	SECURITAD ASSOCIATES EMPIRE STATE BUILDING SUITE 2305 NEW YORK, NY 10118 Federal Action No.: NY36-0004-029 Purpose: SECTION 8 RENT SPECIAL ADJUSTMENT	$ 6,246.30
	R & B REALTY GROUP 2222 CORINTH AVENUE LOS ANGELES, CA 90064 Federal Action No.: SEE PURPOSE Purpose: MORTGAGE RELIEF, HELP LOANS FOR FEDERAL ACTIONS 121-10513, 121-10511, AND 122-10562	$ 32,283.51
	ASSOCIATED ESTATES REALTY 5025 SWETLAND COURT CLEVELAND, OH 44143 Federal Action No.: SEE PURPOSE Purpose: SECTION 8 BOND DEFEASANCES FOR FEDERAL ACTIONS OH12-0001-028 AND OH12-0001-040	$ 1,814.00
TECHNICAL ASSISTANCE CORPORATION FOR HOUSING 205 W. MONROE STREET SUITE 5 WEST CHICAGO, IL 60606	PAUL STEWART APARTMENTS ASSOCIATES, PHASE II PEOPLES CO-OP FOR HOUSING PHASE III 400 E. 41ST STREET CHICAGO, IL 60653 Federal Action No.: 071-35319-PM/L8 Purpose: MANAGEMENT AND OPERATIONS CONSULTING, INCLUDING ASSISTANCE IN OBTAINING RENT	$ 2,500.00

TECHNICAL ASSISTANCE CORPORATION FOR HOUSING
(Continued)

INCREASES, RELEASE OF REPLACEMENT RESERVE FUNDS, DAY-TO-DAY MANAGEMENT OPERATIONS, ANNUAL AUDITS, COMMERCIAL LEASING, PARTNERSHIP REPORTING

PAUL G. STEWART APARTMENTS, PHASE V $ 267,336.00
PEOPLES CONSUMER COOPERATIVE
400 EAST 41ST STREET
CHICAGO, IL 60653
Federal Action No.: 071-35611
Purpose: HOUSING CONSULTANT FOR MULTIFAMILY HOUSING DEVELOPMENT INVOLVING FHA INSURANCE (PLUS LOW INCOME HOUSING TAX CREDITS AND TAX INCREMENT FINANCING ADMINISTERED BY THE CITY OF CHICAGO AND FEDERAL HOME FUNDS ADMINISTERED BY THE ILLINOIS HOUSING DEVELOPMENT AUTHORITY); HUD ACTION OBTAINED WAS ISSUANCE OF A COMMITMENT FOR FHA INSURANCE AND ACHIEVEMENT OF AN INITIAL ENDORSEMENT OF THE LOAN

PAUL STEWART APARTMENTS ASSOCIATES, PHASE I $ 9,000.00
400 EAST 41ST STREET
CHICAGO, IL 60653
Federal Action No.: 071-44145
Purpose: MANAGEMENT AND OPERATIONS CONSULTING, INCLUDING ASSISTANCE IN OBTAINING RENT INCREASES, RELEASE OF REPLACEMENT RESERVE FUNDS, DAY-TO-DAY MANAGEMENT OPERATIONS, ANNUAL AUDITS, COMMERCIAL LEASING, PARTNERSHIP REPORTING

PAUL STEWART APARTMENTS ASSOCIATES, PHASE II$ 6,000.00
400 EAST 41ST STREET
CHICAGO, IL 60653
Federal Action No.: 071-44175
Purpose: MANAGEMENT AND OPERATIONS CONSULTING, INCLUDING ASSISTANCE IN OBTAINING RENT INCREASES, RELEASE OF REPLACEMENT RESERVE FUNDS, DAY-TO-DAY MANAGEMENT OPERATIONS, ANNUAL AUDITS, COMMERCIAL LEASING, PARTNERSHIP REPORTING

WEINER BRODSKY SIDMAN & KIDER, P.C.
1350 NEW YORK AVENUE, NW
SUITE 800
WASHINGTON, DC 20005

MELLON BANK CORPORATION $ 800.00
500 GRANT STREET, SUITE 1910
1 MELLON BANK CENTER
PITTSBURGH, PA 15258
Federal Action No.: 05120
Purpose: ASSISTANCE IN OBTAINING HUD APPROVAL OF BULK TRANSFER OF BRANCH OFFICES

BANK OF AMERICA $ 1,066.00
555 CALIFORNIA STREET
SAN FRANCISCO, CA 94104
Federal Action No.: 1422
Purpose: ASSISTANCE IN RESOLVING GNMA RECERTIFICATIONS ISSUES

FIRST UNION MORTGAGE CORPORATION $ 2,156.00
TWO FIRST UNION CENTER
MC 0630
CHARLOTTE, NC 28288-0630
Federal Action No.: 35214
Purpose: ASSIST IN OBTAINING HUD APPROVAL OF BULK TRANSFER OF BRANCH OFFICES

GE CAPITAL ASSET MANAGEMENT CORPORATION $ 1,035.00
2001 N. BEAUREGARD STREET
SUITE 1200
ALEXANDRIA, VA 22311
Federal Action No.: 3580
Purpose: ASSISTANCE WITH AMENDMENTS TO GNMA MANUFACTURED HOME SUBSERVICING CONTRACT

GE CAPITAL ASSET MANAGEMENT CORPORATION $ 671.00
2001 N. BEAUREGARD STREET
SUITE 1200
ALEXANDRIA, VA 22311
Federal Action No.: 3580
Purpose: REQUEST FOR GNMA WAIVER OF TRANSFER FEES IN AFFILIATE TO AFFILIATE TRANSFER

BANK OF AMERICA $ 928.00
555 CALIFORNIA STREET
SAN FRANCISCO, CA 94104
Federal Action No.: 3650
Purpose: ASSISTANCE IN OBTAINING GNMA ISSUER APPROVAL AND NEGOTIATING CORPORATE GUARANTY AGREEMENT

WEINER BRODSKY SIDMAN & KIDER, P.C.
(Continued)

BANK OF AMERICA $ 3,554.00
555 CALIFORNIA STREET
SAN FRANCISCO, CA 94104
Federal Action No.: 3650
Purpose: ASSISTANCE IN UNITED MORTGAGE ACQUISITION AND GNMA TRANSFER OF ISSUER RESPONSIBILITY

BANK OF AMERICA $ 1,166.00
555 CALIFORNIA STREET
SAN FRANCISCO, CA 94104
Federal Action No.: 3650
Purpose: ASSISTANCE WITH GNMA TRANSFER OF ISSUER RESPONSIBILITY FROM MARGARETTEN

SECURITY PACIFIC HOUSING SERVICES $ 142.00
DIVISION OF BANK OF AMERICA, FSB
10124 OLD GROVE ROAD
SAN DIEGO, CA 92132
Federal Action No.: 3650
Purpose: ASSISTANCE IN GNMA REVIEW OF REACTIVATION OF MANUFACTURED HOME ISSUER APPROVAL

NATIONAL LOAN SERVICENTER, INC. $ 4,729.00
11900 BOURNEFIELD WAY
SILVER SPRING, MD 20904
Federal Action No.: 70406
Purpose: WORKOUT OF GNMA SERVICING SALE WITHIN CONSTRAINTS OF COMPANY'S FINANCIAL CONDITION

MORTGAGE FUNDING CORPORATION OF AMERICA $ 2,636.00
150 SECOND AVENUE NORTH
SUITE 820
ST. PETERSBURG, FL 33701
Federal Action No.: 74814
Purpose: ASSISTANCE WITH OBTAINING APPROVAL OF GNMA TRANSFER OF ISSUER RESPONSIBILITY

FLEET MORTGAGE GROUP, INC. $ 249.00
1333 MAIN STREET
COLUMBIA, SC 29211
Federal Action No.: 77706
Purpose: ASSISTANCE IN OBTAINING HUD MORTGAGEE APPROVAL

FLEET MORTGAGE GROUP, INC. $ 1,749.00
1333 MAIN STREET
COLUMBIA, SC 29211
Federal Action No.: 77706
Purpose: ASSISTANCE IN HUD RECONSIDERATION OF RECONVEYANCE REQUEST

SPECTRUM FUNDING CORPORATION $ 322.00
11900 BOURNEFIELD WAY
SILVER SPRING, MD 20904
Federal Action No.: 77763
Purpose: ASSISTANCE IN OBTAINING HUD MORTGAGEE APPROVAL

KROOTH & ALTMAN
1850 M STREET, NW
SUITE 400
WASHINGTON, DC 20036-5803

WMF/HUNTOON, PAIGE ASSOCIATES LIMITED $ 500.00
NEWPORT FINANCIAL CENTER
111 PAVONIA AVENUE
JERSEY CITY, NJ 07310
Federal Action No.: 012-11206
Purpose: INITIAL CLOSING

MERRILL LYNCH CAPITAL MARKETS $ 10,000.00
250 VESEY STREET
NEW YORK, NY 10281
Federal Action No.: 012-13027-NP-EC
Purpose: DEBENTURE LOCK REFUNDING

GOLDMAN SACHS MORTGAGE COMPANY $ 15,000.00
85 BROAD STREET
NEW YORK, NY 10004
Federal Action No.: 012-13032-NP-EC
Purpose: LOAN MANAGEMENT WAIVER REQUEST

MERRILL LYNCH CAPITAL MARKETS $ 10,000.00
250 VESEY STREET
NEW YORK, NY 10281
Federal Action No.: 012-13045
Purpose: DEBENTURE LOCK REFINANCING

J. P. MORGAN $ 5,000.00
60 WALL STREET
33RD FLOOR
NEW YORK, NY 19260-0060
Federal Action No.: 012-13918-NO-EC
Purpose: TERMINATION OF INSURANCE

KROOTH & ALTMAN
(Continued)

SIMS MORTGAGE FUNDING, INC. $ 10,000.00
321 RIVERSIDE AVENUE
WESTPORT, CT 06880
Federal Action No.: 012-43121
Purpose: INITIAL CLOSING AND RELATED MATTERS

SIMS MORTGAGE FUNDING, INC. $ 7,500.00
321 RIVERSIDE AVENUE
WESTPORT, CT 06880
Federal Action No.: 012-43152
Purpose: INITIAL CLOSING

FLEET FUNDING $ 35,000.00
1600 STEWART AVENUE, FIFTH FLOOR
WESTBURY, NY 11590
Federal Action No.: 012-43174
Purpose: INITIAL CLOSING

SIMS MORTGAGE FUNDING, INC. $ 5,000.00
321 RIVERSIDE AVENUE
WESTPORT, CT 06880
Federal Action No.: 014-10008
Purpose: INITIAL CLOSING

SIMS MORTGAGE FUNDING, INC. $ 5,000.00
321 RIVERSIDE AVENUE
WESTPORT, CT 06880
Federal Action No.: 014-43090
Purpose: INITIAL CLOSING

GOLDMAN SACHS MORTGAGE COMPANY $ 10,000.00
85 BROAD STREET
NEW YORK, NY 10004
Federal Action No.: 023-57002
Purpose: DEBENTURE LOCK REFUNDING

WIRTH & COMPANY $ 10,000.00
ATTENTION: PATRICIA WIRTH
279 EAST 44TH STREET
NEW YORK, NY 10017
Federal Action No.: 024-43037-MP
Purpose: FINAL ENDORSEMENT OF NURSING HOME'S MORTGAGE LOAN

SIMS MORTGAGE FUNDING, INC. $ 4,000.00
321 RIVERSIDE AVENUE
WESTPORT, CT 06880
Federal Action No.: 024-43049
Purpose: REFINANCING

BEAR STEARNS & COMPANY, INC. $ 10,000.00
245 PARK AVENUE
NEW YORK, NY 10167
Federal Action No.: 031-13011
Purpose: PREPAYMENT OF MORTGAGE LOAN

PAINEWEBBER INCORPORATED $ 50,000.00
1285 AVENUE OF THE AMERICAS
NEW YORK, NY 10019
Federal Action No.: 031-13016
Purpose: ADVANCE FUNDING

WMF/HUNTOON, PAIGE ASSOCIATES LIMITED $ 400.00
NEWPORT FINANCIAL CENTER
111 PAVONIA AVENUE
JERSEY CITY, NJ 07310
Federal Action No.: 035-43056
Purpose: INITIAL CLOSING

WMF/HUNTOON, PAIGE ASSOCIATES LIMITED $ 400.00
NEWPORT FINANCIAL CENTER
111 PAVONIA AVENUE
JERSEY CITY, NJ 07310
Federal Action No.: 035-43188
Purpose: INITIAL CLOSING

TOWNE PROPERTIES $ 21,175.06
ATTENTION: PHILIP T. MONTANUS
1055 ST. PAUL PLACE
CINCINNATI, OH 45202
Federal Action No.: 046-94002
Purpose: REFINANCE EXISTING MORTGAGE

HELMSMAN PROPERTIES, INC. $ 6,379.30
ATTENTION: MICHAEL B. GLICK
111 WATER STREET, SUITE 210
BALTIMORE, MD 21202
Federal Action No.: 052-10528-REF
Purpose: REFINANCE EXISTING MORTGAGE

KROOTH & ALTMAN
(Continued)

EDEN-OXFORD ASSOCIATES $ 26,307.79
OXFORD ASSET MANAGEMENT CORPORATION
7200 WISCONSIN AVENUE, 11TH FLOOR
BETHESDA, MD 20814
Federal Action No.: 052-35389-LD-LS
Purpose: REFINANCE EXISTING MORTGAGE

FAIRBROOK ASSOCIATES $ 13,967.65
QUESTAR PROPERTIES, INC.
124 SLADE AVENUE, SUITE 200
BALTIMORE, MD 21208
Federal Action No.: 052-35461
Purpose: REFINANCE EXISTING MORTGAGE

REYNOLDS METALS COMPANY $ 22,000.00
ATTENTION: FRANKLIN R. ELLSWORTH, JR.
6601 WEST BROAD STREET
RICHMOND, VA 23230-1701
Federal Action No.: 063-36601
Purpose: REFINANCE EXISTING MORTGAGE

FAIRWOOD VILLAGE, INC. $ 16,121.41
SIEBER CONSTRUCTION COMPANY
829 HIGHWAY 28
MILFORD, OH 45150
Federal Action No.: 064-35590-MP
Purpose: REFINANCE EXISTING MORTGAGE

BRANDON COVE ASSOCIATES, L.P. $ 5,984.22
ATTENTION: SCOTT F. SMITH
6575 ARROW DRIVE
STERLING HEIGHTS, MI 48134
Federal Action No.: 067-94038
Purpose: REFINANCE EXISTING MORTGAGE

SIMS MORTGAGE FUNDING, INC. $ 15,000.00
321 RIVERSIDE AVENUE
WESTPORT, CT 06880
Federal Action No.: 083-10013
Purpose: INITIAL CLOSING

STANLEY FOLB DEVELOPERS AND CONTRACTORS $ 60,289.75
6464 SUNSET BOULEVARD
HOLLYWOOD, CA 90028
Federal Action No.: 122-36601-PM(17)
Purpose: REFINANCE EXISTING MORTGAGE

SCHOMAC GROUP, INC. $ 4,645.54
ATTENTION: EDWARD M. SANDERS
17 WEST WETMORE, SUITE 300
TUCSON, AZ 85705
Federal Action No.: 123-11035-PM
Purpose: REFINANCE EXISTING MORTGAGE

MILLER & SCHROEDER $ 10,300.00
701 FIFTH AVENUE, SUITE 5730
SEATTLE, WA 98104
Federal Action No.: HAP NY02-0034-004
Purpose: REFINANCE EXISTING MORTGAGE

Appendix C

03/28/1995

Lobbyist & Consultant Activity
Registration (Individual)
Form HUD-2881-A For Calendar Year 1994

Page 1

Registrant's Name and Business Address	Self-Employed	Registrant's Employer and Business Address	Person Registrant has been Retained By	Exempt from Annual Report
GROSS, MICHAEL BENJAMIN 5225 WISCONSIN AVENUE, NW SUITE 600 WASHINGTON, DC 20015 Was Gov't Empl.: No	No	Federal Action No.: 0579-053-REF	LEXINGTON GREEN ASSOCIATES, L.P. DINER DEVELOPMENT 3720 FARRAGUT AVENUE, 4TH FLOOR KENSINGTON, MD 20895	No
GROSS, MICHAEL BENJAMIN 5225 WISCONSIN AVENUE, NW SUITE 600 WASHINGTON, DC 20015 Was Gov't Empl.: No	No	Federal Action No.: 000-10752 REF	QUEENS MANOR GARDENS PARTNERSHIP ATTENTION: CATHY SUE BERNARD, G.P. 5309 38TH AVENUE, SUITE 7 RIVERDALE, MD 20738	No

03/28/1995

Lobbyist & Consultant Activity
Registration (Entity)
Form HUD-2801-B For Calendar Year 1994

Page 1

Registrant's Name and Address	Person Who has Retained Registrant for Lobbying	Registrant Representative's Name	Was Gov't Empl.	In What Capacity
BALLARD SPAHR ANDREWS & INGERSOLL 555 13TH STREET, NW SUITE 900 EAST WASHINGTON, DC 20004 Federal Action No.: FHA 065-35401-PM	MFI MANAGEMENT COMPANY, INC. ATTENTION: PETER ANZO 2000 RIVER RIDGE PARKWAY, SUITE 590 ATLANTA, GA 30328	CASEY, PAUL K.	No	
		MILONE, GUY R., JR.	No	
		WINN, ALLAN R.	No	
		BUNNING-DUBROW, KAREN	No	
		FANONE, JOSEPH A.	No	
		HOOK, PAUL VAN	No	
		WRENN, KELLY M.	No	
		WASHINGTON, JOHN A., JR.	No	
BANC ONE CAPITAL CORPORATION 10 WEST BROAD STREET SUITE 400 COLUMBUS, OH 43215 Federal Action No.: FHA 123-43019-PM	RON HAYES AND ASSOCIATES THE BRIM COMPANIES 305 NE, 102ND AVENUE PORTLAND, OR 97220-4199	BEISLER, MARK C.	No	
		GOODMAN, DAVID L.	No	
		EWING, CHARLES W., JR.	No	
		CROFT, JAMES F.	No	
		ADAMS, JOHN W.	No	
		GLASSER, TIMOTHY G.	No	
		MACKOV, LINDA L.	No	
		ROBERTS, WILLIAM E.	No	
		BUTLER, SAMUEL J.	No	
		BOLDEN, LISA J.	Yes	DEPARTMENT OF HOUSING AND URBAN DEVELOPMENT DIRECTOR, SECTION 242 HOSPITAL MORTGAGE INSURANCE PROGRAM (JOINED BANC ONE ON 04/01/93)
		CINQUINI, ANTHONY D.	No	
		MCMULLEN, CAROLYN A.	Yes	FEDERAL RESERVE BANK OF CHICAGO 12/90 TO 03/93
		STOCKTON, CHRISTINE A.	No	
		PETERS, TRACY W.	No	
		LIM, Y. PRISCILLA	No	
		KING, JAMES A.	No	
		BLUSH, ELIZABETH B.	No	
		KALLMERTEN, R. BARTH	No	
		LEIBOLD, BRADLEY L.	No	
		YOUNG, SANDRA E.	No	
BANC ONE CAPITAL CORPORATION 10 WEST BROAD STREET SUITE 400 COLUMBUS, OH 43215 Federal Action No.: SECTION 242 APPLICATION	UNITED HOSPITALS MEDICAL CENTER 15 SOUTH 9TH STREET ANNEX BUILDING NEWARK, NY 07107	BEISLER, MARK C.	No	
		GOODMAN, DAVID L.	No	
		EWING, CHARLES W., JR.	No	
		CROFT, JAMES F.	No	
		ADAMS, JOHN W.	No	
		GLASSER, TIMOTHY G.	No	
		MACKOV, LINDA L.	No	
		ROBERTS, WILLIAM E.	No	
		BUTLER, SAMUEL J.	No	
		BOLDEN, LISA J.	Yes	DEPARTMENT OF HOUSING AND URBAN DEVELOPMENT DIRECTOR, SECTION 242 HOSPITAL MORTGAGE INSURANCE PROGRAM (JOINED BANC ONE 04/01/93)
		CINQUINI, ANTHONY D.	No	
		MCMULLEN, CAROLYN A.	Yes	FEDERAL RESERVE BANK OF CHICAGO 12/90 TO 03/93
		STOCKTON, CHRISTINE A.	No	
		PETERS, TRACY W.	No	
		LIM, Y. PRISCILLA	No	
BANC ONE CAPITAL CORPORATION 10 WEST BROAD STREET SUITE 400 COLUMBUS, OH 43215 Federal Action No.: 073-35349-PM-L8	NEW CASTLE HOUSING AUTHORITY ATTENTION: JERRY W. CASH, EXECUTIVE DIRECTOR 274 SOUTH 14TH STREET NEW CASTLE, IN 47362	BEISLER, MARK C.	No	
		GOODMAN, DAVID L.	No	
		EWING, CHARLES W., JR.	No	
		CROFT, JAMES F.	No	
		ADAMS, JOHN W.	No	
		GLASSER, TIMOTHY G.	No	
		MACKOV, LINDA L.	No	
		ROBERTS, WILLIAM E.	No	
		BUTLER, SAMUEL J.	No	
		BOLDEN, LISA J.	Yes	DEPARTMENT OF HOUSING AND URBAN DEVELOPMENT DIRECTOR, SECTION 242 HOSPITAL MORTGAGE INSURANCE PROGRAM (JOINED BANC ONE ON 04/01/93)
		CINQUINI, ANTHONY D.	No	
		MCMULLEN, CAROLYN A.	Yes	FEDERAL RESERVE BANK OF CHICAGO 12/90 TO 03/93
		STOCKTON, CHRISTINE A.	No	
		PETERS, TRACY W.	No	
		LIM, Y. PRISCILLA	No	
		KING, JAMES A.	No	
		YOUNG, STEVEN R.	No	

BANC ONE CAPITAL CORPORATION (Continued)		BLUHM, ELIZABETH B.	No	
		KALLMERTEN, R. BARTH	No	
		YOUNG, SANDRA E.	No	
BANC ONE CAPITAL CORPORATION 10 WEST BROAD STREET SUITE 400 COLUMBUS, OH 43215 Federal Action No.: OH16-0013-026	JEFFERSON METROPOLITAN HOUSING AUTHORITY ATTENTION: MICHAEL M. MERICK, DIRECTOR 815 N. SIXTH AVENUE STEUBENVILLE, OH 43952	BEISLER, MARK C.	No	
		GOODMAN, DAVID L.	No	
		EWING, CHARLES W., JR.	No	
		CROFT, JAMES F.	No	
		ADAMS, JOHN W.	No	
		GLASSER, TIMOTHY G.	No	
		MACKOV, LINDA L.	No	
		ROBERTS, WILLIAM E.	No	
		BUTLER, SAMUEL J.	No	
		BOLDEN, LISA J.	Yes	DEPARTMENT OF HOUSING AND URBAN DEVELOPMENT DIRECTOR, SECTION 242 HOSPITAL MORTGAGE INSURANCE PROGRAM (JOINED BANC ONE ON 04/01/93)
		CINQUINI, ANTHONY D.	No	
		MCMULLEN, CAROLYN A.	Yes	FEDERAL RESERVE BANK OF CHICAGO 12/90 TO 03/93
		STOCKTON, CHRISTINE A.	No	
		PETERS, TRACY W.	No	
		LIM, Y. PRISCILLA	No	
		KING, JAMES A.	No	
		YOUNG, STEVEN R.	No	
		BLUHM, ELIZABETH B.	No	
		KALLMERTEN, R. BARTH	No	
		YOUNG, SANDRA E.	No	
BANC ONE CAPITAL CORPORATION 10 WEST BROAD STREET SUITE 400 COLUMBUS, OH 43215 Federal Action No.: 073-43082-PM-IC	HEALTH QUEST REALTY XXI HEALTH QUEST CORPORATION 315 WEST JEFFERSON SOUTH BEND, IN 46601	BEISLER, MARK C.	No	
		GOODMAN, DAVID L.	No	
		EWING, CHARLES W., JR.	No	
		CROFT, JAMES F.	No	
		ADAMS, JOHN W.	No	
		GLASSER, TIMOTHY G.	No	
		MACKOV, LINDA L.	No	
		ROBERTS, WILLIAM E.	No	
		BUTLER, SAMUEL J.	No	
		BOLDEN, LISA J.	Yes	DEPARTMENT OF HOUSING AND URBAN DEVELOPMENT DIRECTOR, SECTION 242 HOSPITAL MORTGAGE INSURANCE PROGRAM (JOINED BANC ONE ON 04/01/93)
		CINQUINI, ANTHONY D.	No	
		MCMULLEN, CAROLYN A.	Yes	FEDERAL RESERVE BANK OF CHICAGO 12/90 TO 03/93
		STOCKTON, CHRISTINE A.	No	
		PETERS, TRACY W.	No	
		LIM, Y. PRISCILLA	No	
		KING, JAMES A.	No	
		YOUNG, STEVEN R.	No	
		BLUHM, ELIZABETH B.	No	
		KALLMERTEN, R. BARTH	No	
		YOUNG, SANDRA E.	No	
BANC ONE CAPITAL CORPORATION 10 WEST BROAD STREET SUITE 400 COLUMBUS, OH 43215 Federal Action No.: 084-11017	INCOME PROPERTIES SERVICES, INC. ATTENTION: JOHN M. HOUTS 104 WEST 42ND STREET, P.O. BOX 32226 KANSAS CITY, MO 64111	BEISLER, MARK C.	No	
		GOODMAN, DAVID L.	No	
		EWING, CHARLES W., JR.	No	
		CROFT, JAMES F.	No	
		ADAMS, JOHN W.	No	
		GLASSER, TIMOTHY G.	No	
		MACKOV, LINDA L.	No	
		ROBERTS, WILLIAM E.	No	
		BUTLER, SAMUEL J.	No	
		BOLDEN, LISA J.	Yes	DEPARTMENT OF HOUSING AND URBAN DEVELOPMENT DIRECTOR, SECTION 242 HOSPITAL MORTGAGE INSURANCE PROGRAM (JOINED BANC ONE ON 04/01/93)
		CINQUINI, ANTHONY D.	No	
		MCMULLEN, CAROLYN A.	Yes	FEDERAL RESERVE BANK OF CHICAGO 12/90 TO 03/93
		STOCKTON, CHRISTINE A.	No	
		PETERS, TRACY W.	No	
		LIM, Y. PRISCILLA	No	
		KING, JAMES A.	No	
		YOUNG, STEVEN R.	No	
		BLUHM, ELIZABETH B.	No	
		KALLMERTEN, R. BARTH	No	
		YOUNG, SANDRA E.	No	

BANC ONE CAPITAL CORPORATION 10 WEST BROAD STREET SUITE 400 COLUMBUS, OH 43215 Federal Action No.: FHA 042-38006-MP-WAH	MENORAH PARK CENTER FOR THE AGING 27100 CEDAR ROAD BEACHWOOD, OH 44122	BEISLER, MARK C.	No	
		GOODMAN, DAVID L.	No	
		EWING, CHARLES W., JR.	No	
		CROFT, JAMES F.	No	
		ADAMS, JOHN W.	No	
		GLASSER, TIMOTHY G.	No	
		MACKOV, LINDA L.	No	
		ROBERTS, WILLIAM E.	No	
		BUTLER, SAMUEL J.	No	
		BOLDEN, LISA J.	Yes	DEPARTMENT OF HOUSING AND URBAN DEVELOPMENT DIRECTOR, SECTION 242 HOSPITAL MORTGAGE INSURANCE PROGRAM (JOINED BANC ONE ON 04/01/93)
		CINQUINI, ANTHONY D.	No	
		MCMULLEN, CAROLYN A.	Yes	FEDERAL RESERVE BANK OF CHICAGO 12/90 TO 03/93
		STOCKTON, CHRISTINE A.	No	
		PETERS, TRACY W.	No	
		LIM, Y. PRISCILLA	No	
		KING, JAMES A.	No	
		YOUNG, STEVEN R.	No	
		BLUHM, ELIZABETH B.	No	
		KALLMERTEN, R. BARTH	No	
		YOUNG, SANDRA E.	No	
BANC ONE CAPITAL CORPORATION 10 WEST BROAD STREET SUITE 400 COLUMBUS, OH 43215 Federal Action No.: 121-35810-PM	GEM MANAGEMENT, INC. ATTENTION: GEMMA HWANG 21070 HOMESTEAD ROAD, SUITE 105 CUPERTINO, CA 95014	BEISLER, MARK C.	No	
		GOODMAN, DAVID L.	No	
		EWING, CHARLES W., JR.	No	
		CROFT, JAMES F.	No	
		ADAMS, JOHN W.	No	
		GLASSER, TIMOTHY G.	No	
		MACKOV, LINDA L.	No	
		ROBERTS, WILLIAM E.	No	
		BUTLER, SAMUEL J.	No	
		BOLDEN, LISA J.	Yes	DEPARTMENT OF HOUSING AND URBAN DEVELOPMENT DIRECTOR, SECTION 242 HOSPITAL MORTGAGE INSURANCE PROGRAM (JOINED BANC ONE ON 04/01/93)
		CINQUINI, ANTHONY D.	No	
		MCMULLEN, CAROLYN A.	Yes	FEDERAL RESERVE BANK OF CHICAGO 12/90 TO 03/93
		STOCKTON, CHRISTINE A.	No	
		PETERS, TRACY W.	No	
		LIM, Y. PRISCILLA	No	
		KING, JAMES A.	No	
		YOUNG, STEVEN R.	No	
		BLUHM, ELIZABETH B.	No	
		KALLMERTEN, R. BARTH	No	
		YOUNG, SANDRA E.	No	
BANC ONE CAPITAL CORPORATION 10 WEST BROAD STREET SUITE 400 COLUMBUS, OH 43215 Federal Action No.: 121-35809-PM	GEM MANAGEMENT, INC. ATTENTION: GEMMA HWANG 21070 HOMESTEAD ROAD, SUITE 105 CUPERTINO, CA 95014	BEISLER, MARK C.	No	
		GOODMAN, DAVID L.	No	
		EWING, CHARLES W., JR.	No	
		CROFT, JAMES F.	No	
		ADAMS, JOHN W.	No	
		GLASSER, TIMOTHY G.	No	
		MACKOV, LINDA L.	No	
		ROBERTS, WILLIAM E.	No	
		BUTLER, SAMUEL J.	No	
		BOLDEN, LISA J.	Yes	DEPARTMENT OF HOUSING AND URBAN DEVELOPMENT DIRECTOR, SECTION 242 HOSPITAL MORTGAGE INSURANCE PROGRAM (JOINED BANC ONE ON 04/01/93)
		CINQUINI, ANTHONY D.	No	
		MCMULLEN, CAROLYN A.	Yes	FEDERAL RESERVE BANK OF CHICAGO 12/90 TO 03/93
		STOCKTON, CHRISTINE A.	No	
		PETERS, TRACY W.	No	
		LIM, Y. PRISCILLA	No	
		KING, JAMES A.	No	
		YOUNG, STEVEN R.	No	
		BLUHM, ELIZABETH B.	No	
		KALLMERTEN, R. BARTH	No	
		YOUNG, SANDRA E.	No	
BANC ONE CAPITAL CORPORATION 10 WEST BROAD STREET SUITE 400 COLUMBUS, OH 43215 Federal Action No.: 052-43038	NORTHAMPTON MANOR, INC. PERINI SERVICES, INC. 14500 BYERS ROAD HAGERSTOWN, MD 21742	BEISLER, MARK C.	No	
		GOODMAN, DAVID L.	No	
		EWING, CHARLES W., JR.	No	
		CROFT, JAMES F.	No	
		ADAMS, JOHN W.	No	

BANC ONE CAPITAL CORPORATION (Continued)		GLASSER, TIMOTHY G.	No	
		MACKOV, LINDA L.	No	
		ROBERTS, WILLIAM E.	No	
		BUTLER, SAMUEL J.	No	
		BOLDEN, LISA J.	Yes	DEPARTMENT OF HOUSING AND URBAN DEVELOPMENT DIRECTOR, SECTION 242 HOSPITAL MORTGAGE INSURANCE PROGRAM (JOINED BANC ONE ON 04/01/93)
		CINQUINI, ANTHONY D.	No	
		MCMULLEN, CAROLYN A.	Yes	FEDERAL RESERVE BANK OF CHICAGO 12/90 TO 03/93
		STOCKTON, CHRISTINE A.	No	
		PETERS, TRACY W.	No	
		LIM, Y. PRISCILLA	No	
		KING, JAMES A.	No	
		YOUNG, STEVEN R.	No	
		BLUHM, ELIZABETH B.	No	
		KALLMERTEN, R. BARTH	No	
		YOUNG, SANDRA E.	No	
BANC ONE CAPITAL CORPORATION 10 WEST BROAD STREET SUITE 400 COLUMBUS, OH 43215 Federal Action No.: IN36-0037-092	HOUSING AUTHORITY OF THE CITY OF MARION ATTENTION: JENNIFER J. JANNEY 601 S. ADAMS STREET MARION, IN 46952	BEISLER, MARK C.	No	
		GOODMAN, DAVID L.	No	
		EWING, CHARLES W., JR.	No	
		CROFT, JAMES F.	No	
		ADAMS, JOHN W.	No	
		GLASSER, TIMOTHY G.	No	
		MACKOV, LINDA L.	No	
		ROBERTS, WILLIAM E.	No	
		BUTLER, SAMUEL J.	No	
		BOLDEN, LISA J.	Yes	DEPARTMENT OF HOUSING AND URBAN DEVELOPMENT DIRECTOR, SECTION 242 HOSPITAL MORTGAGE INSURANCE PROGRAM (JOINED BANC ONE ON 04/01/93)
		CINQUINI, ANTHONY D.	No	
		MCMULLEN, CAROLYN A.	Yes	FEDERAL RESERVE BANK OF CHICAGO 12/90 TO 03/93
		STOCKTON, CHRISTINE A.	No	
		PETERS, TRACY W.	No	
		LIM, Y. PRISCILLA	No	
		KING, JAMES A.	No	
		YOUNG, STEVEN R.	No	
		BLUHM, ELIZABETH B.	No	
		KALLMERTEN, R. BARTH	No	
		YOUNG, SANDRA E.	No	
BANC ONE CAPITAL CORPORATION 10 WEST BROAD STREET SUITE 400 COLUMBUS, OH 43215 Federal Action No.: 066-43059-PM	GRAMERCY PARK NURSING CARE CENTER SENIORS MANAGEMENT, INC. 1114 WYNWOOD AVENUE CHERRY HILL, NJ 08002	BEISLER, MARK C.	No	
		GOODMAN, DAVID L.	No	
		EWING, CHARLES W., JR.	No	
		CROFT, JAMES F.	No	
		ADAMS, JOHN W.	No	
		GLASSER, TIMOTHY G.	No	
		MACKOV, LINDA L.	No	
		ROBERTS, WILLIAM E.	No	
		BUTLER, SAMUEL J.	No	
		BOLDEN, LISA J.	Yes	DEPARTMENT OF HOUSING AND URBAN DEVELOPMENT DIRECTOR, SECTION 242 HOSPITAL MORTGAGE INSURANCE PROGRAM (JOINED BANC ONE ON 04/01/93)
		CINQUINI, ANTHONY D.	No	
		MCMULLEN, CAROLYN A.	Yes	FEDERAL RESERVE BANK OF CHICAGO 12/90 TO 03/93
		STOCKTON, CHRISTINE A.	No	
		PETERS, TRACY W.	No	
		LIM, Y. PRISCILLA	No	
		KING, JAMES A.	No	
		YOUNG, STEVEN R.	No	
		BLUHM, ELIZABETH B.	No	
		KALLMERTEN, R. BARTH	No	
		YOUNG, SANDRA E.	No	
BOCC FUNDING CORPORATION 1750 PRESIDENTS STREET SUITE 200 RESTON, VA 22090 Federal Action No.: FHA 121-35685-PM	GREEN OAKS ASSOCIATES 441 NORTH N STREET TULARE, CA 93274	ARAGE, SUSANA S.	No	
		BEISLER, MARK C.	No	
		GOODMAN, DAVID L.	No	
		ADAMS, JOHN W.	No	
		MACKOV, LINDA L.	No	
		ROBERTS, WILLIAM E.	No	
		STOCKTON, CHRISTINE A.	No	

BROWNSTEIN ZEIDMAN AND LORE 1401 NEW YORK AVENUE, NW SUITE 900 WASHINGTON, DC 20005 Federal Action No.: 061-94039	LIBERTY TAX CREDIT PLUS, L.P. 625 MADISON AVENUE NEW YORK, NY 10022	LORE, KENNETH G. LEVY, HAROLD A.	No No	
BROWNSTEIN ZEIDMAN AND LORE 1401 NEW YORK AVENUE, NW SUITE 900 WASHINGTON, DC 20005 Federal Action No.: 012-11206	TOWNE HOUSE VILLAGE NORTH OWNERS, INC. ATTENTION: GRAHME FISCHER 250 VILLAGE DRIVE HAUPPAUGE, NY 11788	LORE, KENNETH G. LEVY, HAROLD A.	No No	
BROWNSTEIN ZEIDMAN AND LORE 1401 NEW YORK AVENUE, NW SUITE 900 WASHINGTON, DC 20005 Federal Action No.: 012-55115	USGI CAPITAL MARKETS GROUP, INC. 535 CONNECTICUT AVENUE NORWALK, CT 06854	LORE, KENNETH G. LEVY, HAROLD A.	No Yes	DEPARTMENT OF HOUSING AND URBAN DEVELOPMENT CHIEF ATTORNEY, LOAN MANAGEMENT AND PROPERTY DISPOSITION SECTION
BROWNSTEIN ZEIDMAN AND LORE 1401 NEW YORK AVENUE, NW SUITE 900 WASHINGTON, DC 20005 Federal Action No.: 071-35403	USGI CAPITAL MARKETS GROUP, INC. 535 CONNECTICUT AVENUE NORWALK, CT 06854	LORE, KENNETH G. LEVY, HAROLD A.	No Yes	DEPARTMENT OF HOUSING AND URBAN DEVELOPMENT CHIEF ATTORNEY, LOAN MANAGEMENT AND PROPERTY DISPOSITION SECTION
BROWNSTEIN ZEIDMAN AND LORE 1401 NEW YORK AVENUE, NW SUITE 900 WASHINGTON, DC 20005 Federal Action No.: 085-35197	USGI CAPITAL MARKETS GROUP, INC. 535 CONNECTICUT AVENUE NORWALK, CT 06854	LORE, KENNETH G. LEVY, HAROLD A.	No Yes	DEPARTMENT OF HOUSING AND URBAN DEVELOPMENT CHIEF ATTORNEY, LOAN MANAGEMENT AND PROPERTY DISPOSITION SECTION
BROWNSTEIN ZEIDMAN AND LORE 1401 NEW YORK AVENUE, NW SUITE 900 WASHINGTON, DC 20005 Federal Action No.: 012-35632-PM	THE BRODSKY ORGANIZATION ATTENTION: DANIEL BRODSKY 425 WEST 59TH STREET NEW YORK, NY 10019	LORE, KENNETH G. LEVY, HAROLD A.	No Yes	DEPARTMENT OF HOUSING AND URBAN DEVELOPMENT CHIEF ATTORNEY, LOAN MANAGEMENT AND PROPERTY DISPOSITION SECTION
BROWNSTEIN ZEIDMAN AND LORE 1401 NEW YORK AVENUE, NW SUITE 900 WASHINGTON, DC 20005 Federal Action No.: 012-94008	AMERICAN PROPERTY FINANCING, INC. 135 EAST 57TH STREET 20TH FLOOR NEW YORK, NY 10022	LORE, KENNETH G. LEVY, HAROLD A.	No Yes	DEPARTMENT OF HOUSING AND URBAN DEVELOPMENT CHIEF ATTORNEY, LOAN MANAGEMENT AND PROPERTY DISPOSITION SECTION
BROWNSTEIN ZEIDMAN AND LORE 1401 NEW YORK AVENUE, NW SUITE 900 WASHINGTON, DC 20005 Federal Action No.: 117-44032	ROLLING MEADOWS OF CHICKASHA, LTD. NEW TEXAS ASSOCIATES 625 MADISON AVENUE, 9TH FLOOR NEW YORK, NY 10022	LORE, KENNETH G. LEVY, HAROLD A.	No No	
BROWNSTEIN ZEIDMAN AND LORE 1401 NEW YORK AVENUE, NW SUITE 900 WASHINGTON, DC 20005 Federal Action No.: 071-94-013	SHERIDAN ROAD LIFESTYLE PARTNERSHIP ATTENTION: WILLIAM KAPLAN 737 N. MICHIGAN, SUITE 900 CHICAGO, IL 60611	LORE, KENNETH G. LEVY, HAROLD A.	No Yes	DEPARTMENT OF HOUSING AND URBAN DEVELOPMENT CHIEF ATTORNEY, LOAN MANAGEMENT AND PROPERTY DISPOSITION SECTION
BROWNSTEIN ZEIDMAN AND LORE 1401 NEW YORK AVENUE, NW SUITE 900 WASHINGTON, DC 20005 Federal Action No.: 129-35082	ESCONDIDO RETIREMENT CENTER THE BANK OF NEW YORK 1 WALL STREET, 15TH FLOOR - LEGAL DEPARTMENT NEW YORK, NY 10286	LORE, KENNETH G. HOWE, ANDREA HILTON	No No	
COAN & LYONS 1100 CONNECTICUT AVENUE, NW SUITE 1000 WASHINGTON, DC 20036 Federal Action No.: 024-44028-LDP-SUP	BROOK VILLAGE NORTH ASSOCIATES 56 KEARNEY ROAD NEEDHAM, MA 02194	COAN, CARL A. S., JR. JAMES, RAYMOND K.	No No	
DC COMPREHENSIVE AIDS RESOURCES AND EDUCATION CONSORTIUM 801 PENNSYLAVANIA AVENUE, SE WASHINGTON, DC 20003 Federal Action No.: DC39H92F013	DC COMPREHENSIVE AIDS RESOURCES AND EDUCATION CONSORTIUM 801 PENNSYLAVANIA AVENUE, SE WASHINGTON, DC 20003	BATES, CHRISTOPHER EDWARDS, CHERYL SPANN PATTON, ALINA	No No No	
DC COMPREHENSIVE AIDS RESOURCES AND EDUCATION CONSORTIUM 801 PENNSYLAVANIA AVENUE, SE WASHINGTON, DC 20003 Federal Action No.: DC39H93F014	DC COMPREHENSIVE AIDS RESOURCES AND EDUCATION CONSORTIUM 801 PENNSYLAVANIA AVENUE, SE WASHINGTON, DC 20003	BATES, CHRISTOPHER EDWARDS, CHERYL SPANN PATTON, ALINA	No No No	

DC DEPARTMENT OF HUMAN SERVICES AGENCY FOR HIV/AIDS 1660 L STREET, NW, 7TH FLOOR WASHINGTON, DC 20036 Federal Action No.: DC39H93F014	DC DEPARTMENT OF HUMAN SERVICES AGENCY FOR HIV/AIDS 1660 L STREET, NW, 7TH FLOOR WASHINGTON, DC 20036	HAVENNER, STEVEN KILKELLY, STEVEN BERRY-GAINES, CHERYL	No No No
DC DEPARTMENT OF HUMAN SERVICES AGENCY FOR HIV/AIDS 1660 L STREET, NW, 7TH FLOOR WASHINGTON, DC 20036 Federal Action No.: DC39H92F013	DC DEPARTMENT OF HUMAN SERVICES AGENCY FOR HIV/AIDS 1660 L STREET, NW, 7TH FLOOR WASHINGTON, DC 20036	HAVENNER, STEVEN KILKELLY, STEVEN BERRY-GAINES, CHERYL	No No No
FOLEY AND LARDNER 1 SOUTH PINCKNEY STREET, SUITE 701 P.O. BOX 1497 MADISON, WI 53701-1497 Federal Action No.: 075-35323-PM/WAH	VILLA ST. THERESA, INC. 5016 WEST BURLEIGH STREET MILWAUKEE, WI 53210	LAWRENCE, WAYMAN C. RADELET, TIMOTHY J. CROPSEY, DOUGLAS J.	No No No
HESSEL AND ALUISE, P.C. 1050 17TH STREET, NW SUITE 900 WASHINGTON, DC 20036 Federal Action No.: 054-11013	MELLON MORTGAGE COMPANY TWO MELLON BANK CENTER SUITE M-70 PITTSBURGH, PA 15259	GURKIN, JOANNE SCHOMER, MORTON W. ALUISE, TIMOTHY J. HESSEL, ARTHUR R. SAUNDERS, JENNIFER L. GIVISKOS, CHRISTINE S.	No No No No No No
HESSEL AND ALUISE, P.C. 1050 17TH STREET, NW SUITE 900 WASHINGTON, DC 20036 Federal Action No.: 052-11082	MELLON MORTGAGE COMPANY TWO MELLON BANK CENTER SUITE M-70 PITTSBURGH, PA 15259	GURKIN, JOANNE SCHOMER, MORTON W. ALUISE, TIMOTHY J. HESSEL, ARTHUR R. SAUNDERS, JENNIFER L. GIVISKOS, CHRISTINE S.	No No No No No No
HONIGMAN MILLER SCHWARTZ AND COHN 2290 FIRST NATIONAL BUILDING 660 WOODWARD AVENUE DETROIT, MI 48226 Federal Action No.: 048-94008	HEMPHILL ROAD PROPERTIES 4400 KINGSLANE BURTON, MI 48529	BANAS, C. LESLIE OMICHINSKI, NANCY M.	No No
LANE & MITTENDORF 919 18TH STREET, NW SUITE 800 WASHINGTON, DC 20006 Federal Action No.: DC39H92F013	DC COMPREHENSIVE AIDS RESOURCES AND EDUCATION CONSORTIUM 801 PENNSYLAVANIA AVENUE, SE WASHINGTON, DC 20003	BERG, JEFFREY C.	No
LANE & MITTENDORF 919 18TH STREET, NW SUITE 800 WASHINGTON, DC 20006 Federal Action No.: DC39H93F014	DC COMPREHENSIVE AIDS RESOURCES AND EDUCATION CONSORTIUM 801 PENNSYLAVANIA AVENUE, SE WASHINGTON, DC 20003	BERG, JEFFREY C.	No
LINOWES AND BLOCHER 1010 WAYNE AVENUE SUITE 1000 SILVER SPRING, MD 20910 Federal Action No.: FHA 000-10582	PATRICIAN MORTGAGE COMPANY 4800 MONTGOMERY LANE SUITE 200 BETHESDA, MD 20814	ORRICK, JOHN R., JR. SMITH, SCOTT R.	No No
THE LOGS GROUP 4201 LAKE COOK ROAD NORTHBROOK, IL 60062 Federal Action No.: 351-2125101	CITICORP MORTGAGE MAIL STATION 306 P.O. BOX 790006 ST. LOUIS, MO 63179-0006	KAPPELER, ALAN J.	No
THE LOGS GROUP 4201 LAKE COOK ROAD NORTHBROOK, IL 60062 Federal Action No.: 75337-0000-3	FIRST NATIONAL MORTGAGE CORPORATION 2600 INSURANCE CENTER DRIVE SUITE A-202 JACKSON, MS 39216	KAPPELER, ALAN J.	No
PEPPER HAMILTON AND SCHEETZ 1300 GROUP 1300 19TH STREET, NW, SUITE 700 WASHINGTON, DC 20036-1685 Federal Action No.: 000-44121-LDP-SUP	FOURTH B/W PARKWAY, L.P. 8027 LEESBURG PIKE SUITE 103 VIENNA, VA 22182	SCHREIBERG, SHELDON L.	No
PEPPER HAMILTON AND SCHEETZ 1300 GROUP 1300 19TH STREET, NW, SUITE 700 WASHINGTON, DC 20036-1685 Federal Action No.: 083-35365-L8	CARROUSEL PROPERTIES 935 EAST BROAD STREET COLUMBUS, OH 43205	SCHREIBERG, SHELDON L.	No
PEPPER HAMILTON AND SCHEETZ 1300 GROUP 1300 19TH STREET, NW, SUITE 700 WASHINGTON, DC 20036-1685 Federal Action No.: 071-35554	CAPITAL FUNDING GROUP, LTD. ATTENTION: MICHAEL H. MOSS 875 NORTH DEARBORN STREET CHICAGO, IL 60610	SCHREIBERG, SHELDON L.	No
QUARLES AND BRADY 411 EAST WISCONSIN AVENUE MILWAUKEE, WI 53202 Federal Action No.: 075-43099-PM	NEW PERSPECTIVE OF BROOKFIELD, INC. 530 WALNUT STREET P.O. BOX 754 WEST BEND, WI 53095	COMER, ANN K. JOST, LAWRENCE J.	No No

QUARLES AND BRADY 411 EAST WISCONSIN AVENUE MILWAUKEE, WI 53202 Federal Action No.: 075-35317-PM	FOREST RIDGE OF MILWAUKEE, L.P. 11077 WEST FOREST HOME AVENUE HALES CORNERS, WI 53130	COMER, ANN K.	No
QUARLES AND BRADY 411 EAST WISCONSIN AVENUE MILWAUKEE, WI 53202 Federal Action No.: 075-35331-PM	COUNTRY OAKS II, L.P. 7600 WEST HAMPTON AVENUE MILWAUKEE, WI 53218	COMER, ANN K.	No
QUARLES AND BRADY 411 EAST WISCONSIN AVENUE MILWAUKEE, WI 53202 Federal Action No.: 075-35320	FIRST BANK (WA) 201 WEST WISCONSIN AVENUE MILWAUKEE, WI 53259	COMER, ANN K.	No
QUARLES AND BRADY 411 EAST WISCONSIN AVENUE MILWAUKEE, WI 53202 Federal Action No.: 075-35346-PM	VALLEY TRUST COMPANY 221 WEST COLLEGE AVENUE BOX 1056 APPLETON, WI 54912-1056	COMER, ANN K.	No
1300 GROUP 1300 19TH STREET, NW SUITE 700 WASHINGTON, DC 20036-1685 Federal Action No.: 061-94039	THE RELATED COMPANIES 625 MADISON AVENUE NEW YORK, NY 10022	SALOMON, ROBERT S., III	No
1300 GROUP 1300 19TH STREET, NW SUITE 700 WASHINGTON, DC 20036-1685 Federal Action No.: 012-10551	THE RELATED COMPANIES 625 MADISON AVENUE NEW YORK, NY 10022	SALOMON, ROBERT S., III	No
1300 GROUP 1300 19TH STREET, NW SUITE 700 WASHINGTON, DC 20036-1685 Federal Action No.: 061-94039	THE RELATED COMPANIES 625 MADISON AVENUE NEW YORK, NY 10022	SALOMON, ROBERT S., III	No
1300 GROUP 1300 19TH STREET, NW SUITE 700 WASHINGTON, DC 20036-1685 Federal Action No.: 000-4056-LDP	KUTAK ROCK COHEN CAMPBELL AND PETERS ATTENTION: KIMBALL GRIFFITH 1101 CONNECTICUT AVENUE, NW, SUITE 1000 WASHINGTON, DC 20036	SALOMON, ROBERT S., III	No
1300 GROUP 1300 19TH STREET, NW SUITE 700 WASHINGTON, DC 20036-1685 Federal Action No.: FHA 085-94006	MULLENIX PROPERTIES, INC. ATTENTION: MICHAEL MULLENIX 12312 OLIVE BOULEVARD, SUITE 260 CREVE COEUR, MO 63141	SALOMON, ROBERT S., III	No
1300 GROUP 1300 19TH STREET, NW SUITE 700 WASHINGTON, DC 20036-1685 Federal Action No.: 000-4056-LDP	KUTAK ROCK ATTENTION: KIMBALL GRIFFITH 1101 CONNECTICUT AVENUE, NW, SUITE 1000 WASHINGTON, DC 20036	SALOMON, ROBERT S., III	No
1300 GROUP 1300 19TH STREET, NW SUITE 700 WASHINGTON, DC 20036-1685 Federal Action No.: 780000416	TECHNICAL ASSISTANCE CORPORATON OF THE CITY OF ST. LOUIS 100 NORTH BROADWAY, SUITE 1625 ST. LOUIS, MO 63102	SALOMON, ROBERT S., III	No
1300 GROUP 1300 19TH STREET, NW SUITE 700 WASHINGTON, DC 20036-1685 Federal Action No.: 29-MC0006-020-02	TECHNICAL ASSISTANCE CORPORATON OF THE CITY OF ST. LOUIS 100 NORTH BROADWAY, SUITE 1625 ST. LOUIS, MO 63102	SALOMON, ROBERT S., III	No
WEINER BRODSKY SIDMAN & KIDER, P.C. 1350 NEW YORK AVENUE, NW SUITE 800 WASHINGTON, DC 20005 Federal Action No.: 75834-000-8	TEMPLE-INLAND MORTGAGE CORPORATION TEMPLE-INLAND BUILDING 301 CONGRESS AUSTIN, TX 78767	GOLD, LAURENCE H. SHEARER, ANN B. BRODSKY, JAMES A. WEINER, HARVEY E. ANDREANO, RICHARD J., JR. KIDER, MITCHEL H. MELNICK, RICHARD J. NOEL, LISA M. HALPERN, DON J. LEDNER, SHERRI L. JONES, THOMAS P.	No No No No No No No No No No No
WEINER BRODSKY SIDMAN & KIDER, P.C. 1350 NEW YORK AVENUE, NW SUITE 800 WASHINGTON, DC 20005 Federal Action No.: 30275-0999-0	PHH US MORTGAGE CORPORATION 6000 ATRIUM WAY MT. LAUREL, NJ 08054	GOLD, LAURENCE H. SHEARER, ANN B. BRODSKY, JAMES A. WEINER, HARVEY E. ANDREANO, RICHARD J., JR. KIDER, MITCHEL H. MELNICK, RICHARD J. NOEL, LISA M. HALPERN, DON J. LEDNER, SHERRI L. JONES, THOMAS P.	No No No No No No No No No No No

WILSON STRICKLAND AND BENSON, P.C. ONE MIDTOWN PLAZA, SUITE 1100 1360 PEACHTREE STREET, NE ATLANTA, GA 30309-3214 Federal Action No.: 061-10539-PM	LIFE COLLEGE 1269 BARCLAY CIRCLE MARIETTA, GA 30060	STRICKLAND, FRANK B.	No
HOLLAND AND KNIGHT 2100 PENNSYLVANIA AVENUE, NW SUITE 400 WASHINGTON, DC 20037-3202 Federal Action No.: HAP A-76-164	KNOXVILLE COMMUNITY DEVELOPMENT CORPORATION P.O. BOX 3550 KNOXVILLE, TN 37927-3550	LEVINE, JERRY DUNNELLS, G. RICHARD NILES, STEPHEN D. PARNET, SUZANNE H. FELTER, CAROLYN P. NESBITT, LA FONTE STERLING, SCOTT A.	No No No No No No No
HOLLAND AND KNIGHT 2100 PENNSYLVANIA AVENUE, NW SUITE 400 WASHINGTON, DC 20037-3202 Federal Action No.: FHA 071-10512	SALEM CROSS APARTMENTS, L.P. REAL PROPERTY SERVICES CORPORATION 1935 CAMINO VIDA ROBLE CARLSBAD, CA 92008	LEVINE, JERRY DUNNELLS, G. RICHARD NILES, STEPHEN D. PARNET, SUZANNE H. FELTER, CAROLYN P. NESBITT, LA FONTE STERLING, SCOTT A.	No No No No No No No
HOLLAND AND KNIGHT 2100 PENNSYLVANIA AVENUE, NW SUITE 400 WASHINGTON, DC 20037-3202 Federal Action No.: FHA 071-36625	ONE EAST DELAWARE, L.P. WHITEHALL FUNDING, INC. 3399 PEACHTREE STREET ATLANTA, GA 30326	LEVINE, JERRY DUNNELLS, G. RICHARD NILES, STEPHEN D. PARNET, SUZANNE H. FELTER, CAROLYN P. NESBITT, LA FONTE STERLING, SCOTT A.	No No No No No No No
HOLLAND AND KNIGHT 2100 PENNSYLVANIA AVENUE, NW SUITE 400 WASHINGTON, DC 20037-3202 Federal Action No.: FHA 052-10518	NORTHBROOKE, L.P. ATTENTION: LOWELL R. GLAZER 7779 NEW YORK LANE GLEN BURNIE, MD 21061	LEVINE, JERRY DUNNELLS, G. RICHARD NILES, STEPHEN D. PARNET, SUZANNE H. FELTER, CAROLYN P. NESBITT, LA FONTE STERLING, SCOTT A.	No No No No No No No
HOLLAND AND KNIGHT 2100 PENNSYLVANIA AVENUE, NW SUITE 400 WASHINGTON, DC 20037-3202 Federal Action No.: FHA 062-36610	SPEARWOOD APARTMENTS, LTD. BOSTON FINANCIAL ASSET MANAGEMENT 101 ARCH STREET BOSTON, MA 02110-1106	LEVINE, JERRY DUNNELLS, G. RICHARD NILES, STEPHEN D. PARNET, SUZANNE H. FELTER, CAROLYN P. NESBITT, LA FONTE STERLING, SCOTT A.	No No No No No No No
HOLLAND AND KNIGHT 2100 PENNSYLVANIA AVENUE, NW SUITE 400 WASHINGTON, DC 20037-3202 Federal Action No.: FHA 062-36609	GARDEN COVE APARTMENTS, LTD. BOSTON FINANCIAL ASSET MANAGEMENT 101 ARCH STREET BOSTON, MA 02110-1106	LEVINE, JERRY DUNNELLS, G. RICHARD NILES, STEPHEN D. PARNET, SUZANNE H. FELTER, CAROLYN P. NESBITT, LA FONTE STERLING, SCOTT A.	No No No No No No No
KROOTH & ALTMAN 1850 M STREET, NW SUITE 400 WASHINGTON, DC 20036-5803 Federal Action No.: 014-43036	CONTINENTAL SECURITIES CORPORATION 499 SOUTH WARREN STREET SYRACUSE, NY 13202	MAZER, MICHAEL E. FERRA, JAMES F. LIBRETTA, DONALD F. SMITH, HARRISON C. SELDON, ROBERT C. OPERT, JON I. ALTMAN, VICTOR A. BARSKY, DAVID A. GEORGE, MARY JO KIJEWSKI, JOSEPH A. TENNANT, WILLIAM S. CLANCY, PATRICK J. VIRSTALT, JOHN E. GERERES, MARIO B. GROMER, FELICIA M. KROLL, E. JOSEPH ALTMAN, NORMAN S. DELANEY, WILLIAM J. COLE, D. RANDOLPH, JR.	No No No No No No No No No No No No No No No No No No No
KROOTH & ALTMAN 1850 M STREET, NW SUITE 400 WASHINGTON, DC 20036-5803 Federal Action No.: 126-11013	REILLY MORTGAGE GROUP, INC. 2000 CORPORATE RIDGE SUITE 925 MCLEAN, VA 22102	MAZER, MICHAEL E. FERRA, JAMES F. LIBRETTA, DONALD F. SMITH, HARRISON C. SELDON, ROBERT C. OPERT, JON I. ALTMAN, VICTOR A. BARSKY, DAVID A. GEORGE, MARY JO KIJEWSKI, JOSEPH A. TENNANT, WILLIAM S. CLANCY, PATRICK J. VIRSTALT, JOHN E. GERERES, MARIO B. GROMER, FELICIA M. KROLL, E. JOSEPH ALTMAN, NORMAN S. DELANEY, WILLIAM J.	No No No No No No No No No No No No No No No No No No

KROOTH & ALTMAN (Continued)		COLE, D. RANDOLPH, JR.	No
KROOTH & ALTMAN 1850 M STREET, NW SUITE 400 WASHINGTON, DC 20036-5803 Federal Action No.: FHA 064-35590-MP	FAIRWOOD VILLAGE, INC. SIEBER CONSTRUCTION COMPANY 829 HIGHWAY 28 MILFORD, OH 45150	TENNANT, WILLIAM S.	No
KROOTH & ALTMAN 1850 M STREET, NW SUITE 400 WASHINGTON, DC 20036-5803 Federal Action No.: FHA 052-35389-LD-L8	EDEN-OXFORD ASSOCIATES OXFORD ASSET MANAGEMENT CORPORATION 7200 WISCONSIN AVENUE, 11TH FLOOR BETHESDA, MD 20814	TENNANT, WILLIAM S.	No
KROOTH & ALTMAN 1850 M STREET, NW SUITE 400 WASHINGTON, DC 20036-5803 Federal Action No.: 052-35742	VICTORIA PLAZA ATTENTION: DR. JOSHUA R. MITCHELL, III 2200 GARRISON BOULEVARD BALTIMORE, MD 21216	BARSKY, DAVID A.	No
KROOTH & ALTMAN 1850 M STREET, NW SUITE 400 WASHINGTON, DC 20036-5803 Federal Action No.: FHA 012-43174	FLEET FUNDING 1600 STEWART AVENUE, FIFTH FLOOR WESTBURY, NY 11590	MAZER, MICHAEL E. PERNA, JAMES F. LIBRETTA, DONALD F. SMITH, HARRISON C. SELDON, ROBERT C. OPERT, JON I. ALTMAN, VICTOR A. BARSKY, DAVID A. GEORGE, MARY JO KIJEWSKI, JOSEPH A. TENNANT, WILLIAM S. CLANCY, PATRICK J. VIERSTADT, JOHN E. GRESSES, MARIO B. GROMER, FELICIA M. KNOLL, E. JOSEPH ALTMAN, NORMAN S. DELANEY, WILLIAM J. COLE, D. RANDOLPH, JR.	No No No No No No No No No No No No No No No No No No
KROOTH & ALTMAN 1850 M STREET, NW SUITE 400 WASHINGTON, DC 20036-5803 Federal Action No.: FHA 012-43171	FLEET FUNDING 1600 STEWART AVENUE, FIFTH FLOOR WESTBURY, NY 11590	MAZER, MICHAEL E. PERNA, JAMES F. LIBRETTA, DONALD F. SMITH, HARRISON C. SELDON, ROBERT C. OPERT, JON I. ALTMAN, VICTOR A. BARSKY, DAVID A. GEORGE, MARY JO KIJEWSKI, JOSEPH A. TENNANT, WILLIAM S. CLANCY, PATRICK J. VIERSTADT, JOHN E. GRESSES, MARIO B. GROMER, FELICIA M. KNOLL, E. JOSEPH ALTMAN, NORMAN S. DELANEY, WILLIAM J. COLE, D. RANDOLPH, JR.	No No No No No No No No No No No No No No No No No No
KROOTH & ALTMAN 1850 M STREET, NW SUITE 400 WASHINGTON, DC 20036-5803 Federal Action No.: 083-10013	SIMS MORTGAGE FUNDING, INC. 321 RIVERSIDE AVENUE WESTPORT, CT 06880	MAZER, MICHAEL E. PERNA, JAMES F. LIBRETTA, DONALD F. SMITH, HARRISON C. SELDON, ROBERT C. OPERT, JON I. ALTMAN, VICTOR A. BARSKY, DAVID A. GEORGE, MARY JO KIJEWSKI, JOSEPH A. TENNANT, WILLIAM S. CLANCY, PATRICK J. VIERSTADT, JOHN E. GRESSES, MARIO B. GROMER, FELICIA M. KNOLL, E. JOSEPH ALTMAN, NORMAN S. DELANEY, WILLIAM J. COLE, D. RANDOLPH, JR.	No No No No No No No No No No No No No No No No No No
KROOTH & ALTMAN 1850 M STREET, NW SUITE 400 WASHINGTON, DC 20036-5803 Federal Action No.: MHA 014-43090	SIMS MORTGAGE FUNDING, INC. 321 RIVERSIDE AVENUE WESTPORT, CT 06880	MAZER, MICHAEL E. PERNA, JAMES F. LIBRETTA, DONALD F. SMITH, HARRISON C. SELDON, ROBERT C. OPERT, JON I. ALTMAN, VICTOR A. BARSKY, DAVID A. GEORGE, MARY JO KIJEWSKI, JOSEPH A. TENNANT, WILLIAM S.	No No No No No No No No No No No

KROOTH & ALTMAN (Continued)		CLANCY, PATRICK J.	No
		VIERSTADT, JOHN E.	No
		GRESSKES, MARIO B.	No
		GRONKR, FELICIA M.	No
		KROLL, E. JOSEPH	No
		ALTMAN, NORMAN S.	No
		DELANEY, WILLIAM J.	No
		COLE, D. RANDOLPH, JR.	No
LANDMAN & BEATTY 1070 MARKET TOWER 10 WEST MARKET STREET INDIANAPOLIS, IN 46204 Federal Action No.: 047-35048-LDP-SUP-WAH	GENE B. GLICK COMPANY, INC. D/B/A GENE GLICK MANAGEMENT CORPORATION 8330 WOODFIELD CROSSING BOULEVARD, SUITE 200 INDIANAPOLIS, IN 46240	BEATTY, JAMES W. BEATTY, J. F. MCCARTY, VIRGINIA DILL GULLICK, ROBERT H.	No No No No
LANDMAN & BEATTY 1070 MARKET TOWER 10 WEST MARKET STREET INDIANAPOLIS, IN 46204 Federal Action No.: 073-35164-PM	GENE B. GLICK COMPANY, INC. D/B/A GENE GLICK MANAGEMENT CORPORATION 8330 WOODFIELD CROSSING BOULEVARD, SUITE 200 INDIANAPOLIS, IN 46240	BEATTY, JAMES W. BEATTY, J. F. MCCARTY, VIRGINIA DILL GULLICK, ROBERT H.	No No No No
LANDMAN & BEATTY 1070 MARKET TOWER 10 WEST MARKET STREET INDIANAPOLIS, IN 46204 Federal Action No.: 073-35220-PM	GENE B. GLICK COMPANY, INC. D/B/A GENE GLICK MANAGEMENT CORPORATION 8330 WOODFIELD CROSSING BOULEVARD, SUITE 200 INDIANAPOLIS, IN 46240	BEATTY, JAMES W. BEATTY, J. F. MCCARTY, VIRGINIA DILL GULLICK, ROBERT H.	No No No No
LANDMAN & BEATTY 1070 MARKET TOWER 10 WEST MARKET STREET INDIANAPOLIS, IN 46204 Federal Action No.: 047-44091-LDP-SUP-WAH	GENE B. GLICK COMPANY, INC. D/B/A GENE GLICK MANAGEMENT CORPORATION 8330 WOODFIELD CROSSING BOULEVARD, SUITE 200 INDIANAPOLIS, IN 46240	BEATTY, JAMES W. BEATTY, J. F. MCCARTY, VIRGINIA DILL GULLICK, ROBERT H.	No No No No
LANDMAN & BEATTY 1070 MARKET TOWER 10 WEST MARKET STREET INDIANAPOLIS, IN 46204 Federal Action No.: 083-35207-LS-PM	GENE B. GLICK COMPANY, INC. D/B/A GENE GLICK MANAGEMENT CORPORATION 8330 WOODFIELD CROSSING BOULEVARD, SUITE 200 INDIANAPOLIS, IN 46240	BEATTY, JAMES W. BEATTY, J. F. MCCARTY, VIRGINIA DILL GULLICK, ROBERT H.	No No No No
LANDMAN & BEATTY 1070 MARKET TOWER 10 WEST MARKET STREET INDIANAPOLIS, IN 46204 Federal Action No.: 073-35241-PM-LS	GENE B. GLICK COMPANY, INC. D/B/A GENE GLICK MANAGEMENT CORPORATION 8330 WOODFIELD CROSSING BOULEVARD, SUITE 200 INDIANAPOLIS, IN 46240	BEATTY, JAMES W. BEATTY, J. F. MCCARTY, VIRGINIA DILL GULLICK, ROBERT H.	No No No No
LANDMAN & BEATTY 1070 MARKET TOWER 10 WEST MARKET STREET INDIANAPOLIS, IN 46204 Federal Action No.: 073-35239-PM-LS	GENE B. GLICK COMPANY, INC. D/B/A GENE GLICK MANAGEMENT CORPORATION 8330 WOODFIELD CROSSING BOULEVARD, SUITE 200 INDIANAPOLIS, IN 46240	BEATTY, JAMES W. BEATTY, J. F. MCCARTY, VIRGINIA DILL GULLICK, ROBERT H.	No No No No
LANDMAN & BEATTY 1070 MARKET TOWER 10 WEST MARKET STREET INDIANAPOLIS, IN 46204 Federal Action No.: 073-44382-LDP	GENE B. GLICK COMPANY, INC. D/B/A GENE GLICK MANAGEMENT CORPORATION 8330 WOODFIELD CROSSING BOULEVARD, SUITE 200 INDIANAPOLIS, IN 46240	BEATTY, JAMES W. BEATTY, J. F. MCCARTY, VIRGINIA DILL GULLICK, ROBERT H.	No No No No
LANDMAN & BEATTY 1070 MARKET TOWER 10 WEST MARKET STREET INDIANAPOLIS, IN 46204 Federal Action No.: 073-35275-PM-LS	GENE B. GLICK COMPANY, INC. D/B/A GENE GLICK MANAGEMENT CORPORATION 8330 WOODFIELD CROSSING BOULEVARD, SUITE 200 INDIANAPOLIS, IN 46240	BEATTY, JAMES W. BEATTY, J. F. MCCARTY, VIRGINIA DILL GULLICK, ROBERT H.	No No No No
LANDMAN & BEATTY 1070 MARKET TOWER 10 WEST MARKET STREET INDIANAPOLIS, IN 46204 Federal Action No.: 073-35247-PM-LS	GENE B. GLICK COMPANY, INC. D/B/A GENE GLICK MANAGEMENT CORPORATION 8330 WOODFIELD CROSSING BOULEVARD, SUITE 200 INDIANAPOLIS, IN 46240	BEATTY, JAMES W. BEATTY, J. F. MCCARTY, VIRGINIA DILL GULLICK, ROBERT H.	No No No No
LANDMAN & BEATTY 1070 MARKET TOWER 10 WEST MARKET STREET INDIANAPOLIS, IN 46204 Federal Action No.: 073-35190-PM	GENE B. GLICK COMPANY, INC. D/B/A GENE GLICK MANAGEMENT CORPORATION 8330 WOODFIELD CROSSING BOULEVARD, SUITE 200 INDIANAPOLIS, IN 46240	BEATTY, JAMES W. BEATTY, J. F. MCCARTY, VIRGINIA DILL GULLICK, ROBERT H.	No No No No
LANDMAN & BEATTY 1070 MARKET TOWER 10 WEST MARKET STREET INDIANAPOLIS, IN 46204 Federal Action No.: 073-35249-PM-LS	GENE B. GLICK COMPANY, INC. D/B/A GENE GLICK MANAGEMENT CORPORATION 8330 WOODFIELD CROSSING BOULEVARD, SUITE 200 INDIANAPOLIS, IN 46240	BEATTY, JAMES W. BEATTY, J. F. MCCARTY, VIRGINIA DILL GULLICK, ROBERT H.	No No No No
LANDMAN & BEATTY 1070 MARKET TOWER 10 WEST MARKET STREET INDIANAPOLIS, IN 46204 Federal Action No.: 073-35170-PM	GENE B. GLICK COMPANY, INC. D/B/A GENE GLICK MANAGEMENT CORPORATION 8330 WOODFIELD CROSSING BOULEVARD, SUITE 200 INDIANAPOLIS, IN 46240	BEATTY, JAMES W. BEATTY, J. F. MCCARTY, VIRGINIA DILL GULLICK, ROBERT H.	No No No No
LANDMAN & BEATTY 1070 MARKET TOWER 10 WEST MARKET STREET INDIANAPOLIS, IN 46204 Federal Action No.: 073-35292-PM-LS	GENE B. GLICK COMPANY, INC. D/B/A GENE GLICK MANAGEMENT CORPORATION 8330 WOODFIELD CROSSING BOULEVARD, SUITE 200 INDIANAPOLIS, IN 46240	BEATTY, JAMES W. BEATTY, J. F. MCCARTY, VIRGINIA DILL GULLICK, ROBERT H.	No No No No

LANDMAN & BEATTY 1070 MARKET TOWER 10 WEST MARKET STREET INDIANAPOLIS, IN 46204 Federal Action No.: 073-44395-LDP	GENE B. GLICK COMPANY, INC. D/B/A GENE GLICK MANAGEMENT CORPORATION 8330 WOODFIELD CROSSING BOULEVARD, SUITE 200 INDIANAPOLIS, IN 46240	BEATTY, JAMES W. BEATTY, J. F. MCCARTY, VIRGINIA DILL GULLICK, ROBERT H.	No No No No
GENE B. GLICK COMPANY, INC. D/B/A GENE GLICK MANAGEMENT CORPORATION 8330 WOODFIELD CROSSING BOULEVARD, SUITE 200 INDIANAPOLIS, IN 46240 Federal Action No.: 073-35164-PM	VILLAGE APARTMENTS II, L.P. WILLIAMSBURG ON THE LAKE OF MISHAWAKA II 8330 WOODFIELD CROSSING BOULEVARD, SUITE 200 INDIANAPOLIS, IN 46240	MCMURTREY, JOYCE MURDOCK, CHARLES THURSTON, MAX A. WOLFE, CHRISTINE BISESI, JAMES T. RAGAN, TERRI DONNELSON, DEAN COTTRELL, L. JOHN VALINET, STEPHEN L. JACKSON, BEVERLY J. EDMONDS, DENNIS MACFARLAND, DOUGLAS BASILE, FRANK M. CANTRELL, DEAN HOUSTON, KIMBERLY	No No No No No No No No No No No No No No No
GENE B. GLICK COMPANY, INC. D/B/A GENE GLICK MANAGEMENT CORPORATION 8330 WOODFIELD CROSSING BOULEVARD, SUITE 200 INDIANAPOLIS, IN 46240 Federal Action No.: 073-35220-PM	VILLAGE APARTMENTS, L.P. WILLIAMSBURG ON THE LAKE OF MISHAWAKA I 8330 WOODFIELD CROSSING BOULEVARD, SUITE 200 INDIANAPOLIS, IN 46240	MCMURTREY, JOYCE MURDOCK, CHARLES THURSTON, MAX A. WOLFE, CHRISTINE BISESI, JAMES T. RAGAN, TERRI DONNELSON, DEAN COTTRELL, L. JOHN VALINET, STEPHEN L. JACKSON, BEVERLY J. EDMONDS, DENNIS MACFARLAND, DOUGLAS BASILE, FRANK M. CANTRELL, DEAN HOUSTON, KIMBERLY	No No No No No No No No No No No No No No No
GENE B. GLICK COMPANY, INC. D/B/A GENE GLICK MANAGEMENT CORPORATION 8330 WOODFIELD CROSSING BOULEVARD, SUITE 200 INDIANAPOLIS, IN 46240 Federal Action No.: 083-35207-LS-PM	FAIRINGTON APARTMENTS OF LEXINGTON, L.P. 8330 WOODFIELD CROSSING BOULEVARD SUITE 200 INDIANAPOLIS, IN 46240	MURDOCK, CHARLES THURSTON, MAX A. WOLFE, CHRISTINE BISESI, JAMES T. RAGAN, TERRI DONNELSON, DEAN COTTRELL, L. JOHN VALINET, STEPHEN L. JACKSON, BEVERLY J. EDMONDS, DENNIS MACFARLAND, DOUGLAS BASILE, FRANK M. KNAPP, SHARON SIMMS, DIANNE CANTRELL, DEAN HOUSTON, KIMBERLY	No No No No No No No No No No No No No No No No
GENE B. GLICK COMPANY, INC. D/B/A GENE GLICK MANAGEMENT CORPORATION 8330 WOODFIELD CROSSING BOULEVARD, SUITE 200 INDIANAPOLIS, IN 46240 Federal Action No.: 047-35048-LDP-SUP-WAH	HICKORY VILLAGE ASSOCIATES, L.P. 8330 WOODFIELD CROSSING BOULEVARD SUITE 200 INDIANAPOLIS, IN 46240	MURDOCK, CHARLES THURSTON, MAX A. WOLFE, CHRISTINE BISESI, JAMES T. RAGAN, TERRI DONNELSON, DEAN COTTRELL, L. JOHN VALINET, STEPHEN L. JACKSON, BEVERLY J. EDMONDS, DENNIS FISHER, SHARON MACFARLAND, DOUGLAS BASILE, FRANK M. CANTRELL, DEAN HOUSTON, KIMBERLY	No No No No No No No No No No No No No No No
GENE B. GLICK COMPANY, INC. D/B/A GENE GLICK MANAGEMENT CORPORATION 8330 WOODFIELD CROSSING BOULEVARD, SUITE 200 INDIANAPOLIS, IN 46240 Federal Action No.: 047-44091-LDP-SUP-WAH	PLYMOUTH ARMS ASSOCIATES, L.P. 8330 WOODFIELD CROSSING BOULEVARD SUITE 200 INDIANAPOLIS, IN 46240	MURDOCK, CHARLES THURSTON, MAX A. WOLFE, CHRISTINE BISESI, JAMES T. RAGAN, TERRI DONNELSON, DEAN COTTRELL, L. JOHN VALINET, STEPHEN L. JACKSON, BEVERLY J. EDMONDS, DENNIS FISHER, SHARON MACFARLAND, DOUGLAS BASILE, FRANK M. CANTRELL, DEAN HOUSTON, KIMBERLY	No No No No No No No No No No No No No No No
GENE B. GLICK COMPANY, INC. D/B/A GENE GLICK MANAGEMENT CORPORATION 8330 WOODFIELD CROSSING BOULEVARD, SUITE 200 INDIANAPOLIS, IN 46240 Federal Action No.: 073-35241-PM-LS	FAIRINGTON APARTMENTS OF FORT WAYNE, L.P. 8330 WOODFIELD CROSSING BOULEVARD SUITE 200 INDIANAPOLIS, IN 46240	THURSTON, MAX A. WOLFE, CHRISTINE BISESI, JAMES T. RAGAN, TERRI LEAVITT, NORMA E.	No No No No No

GENE B. GLICK COMPANY, INC. D/B/A (Continued)		DONNELSON, DEAN	No
		PACKARD, CAROL	No
		LYONS, JAMES	No
		COTTRELL, L. JOHN	No
		VALINET, STEPHEN L.	No
		JACKSON, BEVERLY J.	No
		CROSBY, PAUL	No
		WILSON, DEANA	No
		EDMONDS, DENNIS	No
		BASILE, FRANK M.	No
GENE B. GLICK COMPANY, INC. D/B/A GENE GLICK MANAGEMENT CORPORATION 8330 WOODFIELD CROSSING BOULEVARD, SUITE 200 INDIANAPOLIS, IN 46240 Federal Action No.: 073-35170	BRIARWOOD APARTMENTS, L.P. D/B/A WOODS I 8330 WOODFIELD CROSSING BOULEVARD, SUITE 200 INDIANAPOLIS, IN 46240	THURSTON, MAX A.	No
		WOLFE, CHRISTINE	No
		BIERSI, JAMES T.	No
		RAGAN, TERRI	No
		LEAVITT, NORMA E.	No
		DONNELSON, DEAN	No
		LYONS, JAMES	No
		COTTRELL, L. JOHN	No
		VALINET, STEPHEN L.	No
		JACKSON, BEVERLY J.	No
		CROSBY, PAUL	No
		WILSON, DEANA	No
		EDMONDS, DENNIS	No
		BASILE, FRANK M.	No
GENE B. GLICK COMPANY, INC. D/B/A GENE GLICK MANAGEMENT CORPORATION 8330 WOODFIELD CROSSING BOULEVARD, SUITE 200 INDIANAPOLIS, IN 46240 Federal Action No.: 073-35190-PM	BRIARWOOD APARTMENTS II, L.P. 8330 WOODFIELD CROSSING BOULEVARD SUITE 200 INDIANAPOLIS, IN 46240	THURSTON, MAX A.	No
		WOLFE, CHRISTINE	No
		BIERSI, JAMES T.	No
		RAGAN, TERRI	No
		LEAVITT, NORMA E.	No
		DONNELSON, DEAN	No
		LYONS, JAMES	No
		COTTRELL, L. JOHN	No
		VALINET, STEPHEN L.	No
		JACKSON, BEVERLY J.	No
		CROSBY, PAUL	No
		WILSON, DEANA	No
		EDMONDS, DENNIS	No
		BASILE, FRANK M.	No
GENE B. GLICK COMPANY, INC. D/B/A GENE GLICK MANAGEMENT CORPORATION 8330 WOODFIELD CROSSING BOULEVARD, SUITE 200 INDIANAPOLIS, IN 46240 Federal Action No.: 073-35249-PM-LS	THE EDSALL HOUSE, L.P. 8330 WOODFIELD CROSSING BOULEVARD SUITE 200 INDIANAPOLIS, IN 46240	THURSTON, MAX A.	No
		WOLFE, CHRISTINE	No
		BIERSI, JAMES T.	No
		RAGAN, TERRI	No
		LEAVITT, NORMA E.	No
		DONNELSON, DEAN	No
		PACKARD, CAROL	No
		LYONS, JAMES	No
		COTTRELL, L. JOHN	No
		VALINET, STEPHEN L.	No
		JACKSON, BEVERLY J.	No
		CROSBY, PAUL	No
		WILSON, DEANA	No
		EDMONDS, DENNIS	No
		BASILE, FRANK M.	No
GENE B. GLICK COMPANY, INC. D/B/A GENE GLICK MANAGEMENT CORPORATION 8330 WOODFIELD CROSSING BOULEVARD, SUITE 200 INDIANAPOLIS, IN 46240 Federal Action No.: 073-35247-PM-LS	CAMBRIDGE SQUARE OF BEECH GROVE, L.P. 8330 WOODFIELD CROSSING BOULEVARD SUITE 200 INDIANAPOLIS, IN 46240	THURSTON, MAX A.	No
		WOLFE, CHRISTINE	No
		BIERSI, JAMES T.	No
		RAGAN, TERRI	No
		LEAVITT, NORMA E.	No
		ORANGE-BENSON, LINDA	No
		DONNELSON, DEAN	No
		LYONS, JAMES	No
		COTTRELL, L. JOHN	No
		VALINET, STEPHEN L.	No
		JACKSON, BEVERLY J.	No
		CROSBY, PAUL	No
		WILSON, DEANA	No
		EDMONDS, DENNIS	No
		BASILE, FRANK M.	No
GENE B. GLICK COMPANY, INC. D/B/A GENE GLICK MANAGEMENT CORPORATION 8330 WOODFIELD CROSSING BOULEVARD, SUITE 200 INDIANAPOLIS, IN 46240 Federal Action No.: 073-35239-PM-LS	JAMESTOWN SQUARE NORTH, L.P. 8330 WOODFIELD CROSSING BOULEVARD SUITE 200 INDIANAPOLIS, IN 46240	THURSTON, MAX A.	No
		WOLFE, CHRISTINE	No
		BIERSI, JAMES T.	No
		RAGAN, TERRI	No
		LEAVITT, NORMA E.	No
		DONNELSON, DEAN	No
		LYONS, JAMES	No
		COTTRELL, L. JOHN	No
		VALINET, STEPHEN L.	No
		JACKSON, BEVERLY J.	No
		CROSBY, PAUL	No
		WILSON, DEANA	No
		EDMONDS, DENNIS	No
		BASILE, FRANK M.	No
		BASILE, BARBARA	No

GENE B. GLICK COMPANY, INC. D/B/A GENE GLICK MANAGEMENT CORPORATION 8330 WOODFIELD CROSSING BOULEVARD, SUITE 200 INDIANAPOLIS, IN 46240 Federal Action No.: 073-35275-PM-L8	NORTHWOOD APARTMENTS OF FRANKLIN, L.P. 8330 WOODFIELD CROSSING BOULEVARD SUITE 200 INDIANAPOLIS, IN 46240	THURSTON, MAX A. WOLFE, CHRISTINE BISESI, JAMES T. RAGAN, TERRI LEAVITT, NORMA E. ORANGE-BENSON, LINDA DONNELSON, DEAN LYONS, JAMES COTTRELL, L. JOHN VALINET, STEPHEN L. JACKSON, BEVERLY J. CROSBY, PAUL WILSON, DEANA EDMONDS, DENNIS BASILE, FRANK M.	No No No No No No No No No No No No No No No
GENE B. GLICK COMPANY, INC. D/B/A GENE GLICK MANAGEMENT CORPORATION 8330 WOODFIELD CROSSING BOULEVARD, SUITE 200 INDIANAPOLIS, IN 46240 Federal Action No.: 073-44382-LDP	CARRIAGE HOUSE OF GREENWOOD ASSOCIATES, L.P. 8330 WOODFIELD CROSSING BOULEVARD SUITE 200 INDIANAPOLIS, IN 46240	THURSTON, MAX A. WOLFE, CHRISTINE BISESI, JAMES T. RAGAN, TERRI LEAVITT, NORMA E. ORANGE-BENSON, LINDA DONNELSON, DEAN LYONS, JAMES COTTRELL, L. JOHN VALINET, STEPHEN L. JACKSON, BEVERLY J. CROSBY, PAUL WILSON, DEANA EDMONDS, DENNIS BASILE, FRANK M.	No No No No No No No No No No No No No No No
GENE B. GLICK COMPANY, INC. D/B/A GENE GLICK MANAGEMENT CORPORATION 8330 WOODFIELD CROSSING BOULEVARD, SUITE 200 INDIANAPOLIS, IN 46240 Federal Action No.: 073-44395-LDP	CAPRI MEADOWS ASSOCIATES, L.P. 8330 WOODFIELD CROSSING BOULEVARD SUITE 200 INDIANAPOLIS, IN 46240	THURSTON, MAX A. WOLFE, CHRISTINE BISESI, JAMES T. RAGAN, TERRI LEAVITT, NORMA E. DONNELSON, DEAN LYONS, JAMES COTTRELL, L. JOHN VALINET, STEPHEN L. JACKSON, BEVERLY J. CROSBY, PAUL WILSON, DEANA EDMONDS, DENNIS BASILE, FRANK M.	No No No No No No No No No No No No No No No
GENE B. GLICK COMPANY, INC. D/B/A GENE GLICK MANAGEMENT CORPORATION 8330 WOODFIELD CROSSING BOULEVARD, SUITE 200 INDIANAPOLIS, IN 46240 Federal Action No.: 073-35292-PM-L8	CAPRI II ASSOCIATES, L.P. 8330 WOODFIELD CROSSING BOULEVARD SUITE 200 INDIANAPOLIS, IN 46240	THURSTON, MAX A. WOLFE, CHRISTINE BISESI, JAMES T. RAGAN, TERRI LEAVITT, NORMA E. DONNELSON, DEAN LYONS, JAMES COTTRELL, L. JOHN VALINET, STEPHEN L. JACKSON, BEVERLY J. CROSBY, PAUL WILSON, DEANA EDMONDS, DENNIS BASILE, FRANK M.	No No No No No No No No No No No No No No No
BOCC FUNDING CORPORATION 1750 PRESIDENTS STREET SUITE 200 RESTON, VA 22090 Federal Action No.: 115-43033-PM	RENAISSANCE VILLAS ATTENTION: THOMAS B. ELIN 12262 LOMICA DRIVE SAN FRANCISCO, CA 94122	ARAOZ, SUSANA S. BEISLER, MARK C. GOODMAN, DAVID L. ADAMS, JOHN W. MACKOY, LINDA L. ROBERTS, WILLIAM E. STOCKTON, CHRISTINE A.	No No No No No No No
BOCC FUNDING CORPORATION 1750 PRESIDENTS STREET SUITE 200 RESTON, VA 22090 Federal Action No.: 121-35831	COUNTRY CLUB VILLA PROPERTIES 3487 MCKEE ROAD SUITE 50 SAN JOSE, CA 95127	ARAOZ, SUSANA S. BEISLER, MARK C. GOODMAN, DAVID L. ADAMS, JOHN W. MACKOY, LINDA L. ROBERTS, WILLIAM E. STOCKTON, CHRISTINE A.	No No No No No No No
BOCC FUNDING CORPORATION 1750 PRESIDENTS STREET SUITE 200 RESTON, VA 22090 Federal Action No.: 123-43019-PM	THE BRIM COMPANIES 305 N.E. 102ND AVENUE PORTLAND, OR 97220	ARAOZ, SUSANA S. BEISLER, MARK C. GOODMAN, DAVID L. ADAMS, JOHN W. MACKOY, LINDA L. ROBERTS, WILLIAM E. STOCKTON, CHRISTINE A.	No No No No No No No
BROWNSTEIN ZEIDMAN AND LORE 1401 NEW YORK AVENUE, NW SUITE 900 WASHINGTON, DC 20005 Federal Action No.: 017-38034	LOEB AND LOEB ATTENTION: FREDRIC M. SANDERS 345 PARK AVENUE NEW YORK, NY 10154	LORE, KENNETH G. LEVY, HAROLD A.	No No

BROWNSTEIN ZEIDMAN AND LORE 1401 NEW YORK AVENUE, NW SUITE 900 WASHINGTON, DC 20005 Federal Action No.: 052-32035	PARK CHARLES THE SHELTER GROUP 218 NORTH CHARLES STREET BALTIMORE, MD 21201	LORE, KENNETH G. LEVY, HAROLD A.	No No	
BROWNSTEIN ZEIDMAN AND LORE 1401 NEW YORK AVENUE, NW SUITE 900 WASHINGTON, DC 20005 Federal Action No.: 012-55018 (LANDS END II)	NATIONAL HOUSING PARTNERSHIP, INC. 1225 EYE STREET, NW WASHINGTON, DC 20005	LORE, KENNETH G. LEVY, HAROLD A.	No No	
BROWNSTEIN ZEIDMAN AND LORE 1401 NEW YORK AVENUE, NW SUITE 900 WASHINGTON, DC 20005 Federal Action No.: 085-35303	PINE-KING ASSOCIATES DEL-CORONADO APARTMENTS 4949 W. PINE BOULEVARD ST. LOUIS, MO 63108	LEVY, HAROLD A. BROWNSTEIN, PHILIP N.	No No	
COAN & LYONS 1100 CONNECTICUT AVENUE, NW SUITE 1000 WASHINGTON, DC 20036 Federal Action No.: MA002HG701	EDWARD BRICE, JR. P.O. BOX 9103 BOSTON, MA 02117	JAMES, RAYMOND K.	No	
FOLEY AND LARDNER 1 SOUTH PINCKNEY STREET, SUITE 701 P.O. BOX 1497 MADISON, WI 53701-1497 Federal Action No.: 075-44052-LDP	ASSISI HOMES HOWARD WOODS, INC. 5016 WEST BURLEIGH STREET MILWAUKEE, WI 53210	LAWRENCE, WAYMAN C. RADELET, TIMOTHY J. CROPSEY, DOUGLAS J.	No No No	
FRANCISCAN MINISTRIES, INC. 26 WEST 171 ROOSEVELT ROAD P.O. BOX 667 WHEATON, IL 60189 Federal Action No.: 075-35323-PM/WAH	VILLA S. THERESA, INC. 5016 WEST BURLEIGH STREET MILWAUKEE, WI 53210	CISEK, ROBERT CARLETON, LYNNELL MORDBERG, CHRISTINE SCHULTZ, PHILLIP JASENSKI, PAUL	No No No No No	
GENE B. GLICK COMPANY, INC. D/B/A GENE GLICK MANAGEMENT CORPORATION 8330 WOODFIELD CROSSING BOULEVARD, SUITE 200 INDIANAPOLIS, IN 46240 Federal Action No.: 073-44395-LDP	CAPRI MEADOWS ASSOCIATES, L.P. 8330 WOODFIELD CROSSING BOULEVARD SUITE 200 INDIANAPOLIS, IN 46240	THURSTON, MAX A. WOLFE, CHRISTINE BIESEI, JAMES T. RAGAN, TERRI LEAVITT, NORMA E. DONNELSON, DEAN PACKARD, CAROL LYONS, JAMES COTTRELL, L. JOHN VALINET, STEPHEN L. JACKSON, BEVERLY J. CROSBY, PAUL WILSON, DEANA EDMONDS, DENNIS BASILE, FRANK M.	No No No No No No No No No No No No No No No	
GENE B. GLICK COMPANY, INC. D/B/A GENE GLICK MANAGEMENT CORPORATION 8330 WOODFIELD CROSSING BOULEVARD, SUITE 200 INDIANAPOLIS, IN 46240 Federal Action No.: 043-44055-LDP/SUP	COLUMBUS HOUSING ASSOCIATES, L.P. 8330 WOODFIELD CROSSING BOULEVARD SUITE 200 INDIANAPOLIS, IN 46240	MURDOCK, CHARLES THURSTON, MAX A. WOLFE, CHRISTINE BIESEI, JAMES T. RAGAN, TERRI DONNELSON, DEAN COTTRELL, L. JOHN VALINET, STEPHEN L. JACKSON, BEVERLY J. WALKER, KIMBERLY EDMONDS, DENNIS MACFARLAND, DOUGLAS BASILE, FRANK M. KNAPP, SHARON SIMMS, DIANNE CANTRELL, DEAN	No No No No No No No No No No No No No No No No	
BANC ONE CAPITAL CORPORATION 10 WEST BROAD STREET SUITE 400 COLUMBUS, OH 43215 Federal Action No.: FHA 123-43015-MP	CHRISTIAN CARE, INC. 2002 WEST SUNNYSIDE DRIVE PHOENIX, AZ 85071-3210	BEISLER, MARK C. GOODMAN, DAVID L. EWING, CHARLES W., JR. CROFT, JAMES F. ADAMS, JOHN W. GLASSER, TIMOTHY G. MACKOV, LINDA L. ROBERTS, WILLIAM E. BUTLER, SAMUEL J. BOLDEN, LISA J. CINQUINI, ANTHONY D. MCMULLEN, CAROLYN A. STOCKTON, CHRISTINE A. PETERS, TRACY W.	No No No No No No No No No Yes No Yes No No	DEPARTMENT OF HOUSING AND URBAN DEVELOPMENT DIRECTOR, SECTION 242 HOSPITAL MORTGAGE INSURANCE PROGRAM FOR THREE YEARS JOINED BANC ONE 04/04/93 FEDERAL RESERVE BANK OF CHICAGO 12/90 - 03/93

BANC ONE CAPITAL CORPORATION (Continued)		LIM, Y. PRISCILLA	No
		KING, JAMES A.	No
		BLUMM, ELIZABETH B.	No
		KALLMERTEN, R. BARTH	No
		LEIBOLD, BRADLEY L.	No
		YOUNG, SANDRA E.	No
GENE B. GLICK COMPANY, INC. D/B/A GENE GLICK MANAGEMENT CORPORATION 8330 WOODFIELD CROSSING BOULEVARD, SUITE 200 INDIANAPOLIS, IN 46240 Federal Action No.: 073-35233-PM-L8	CAMBRIDGE SQUARE OF MUNCIE, L.P. 8330 WOODFIELD CROSSING BOULEVARD SUITE 200 INDIANAPOLIS, IN 46240	MURDOCK, CHARLES	No
		THURSTON, MAX A.	No
		WOLFE, CHRISTINE	No
		BISESI, JAMES T.	No
		RAGAN, TERRI	No
		DONNELSON, DEAN	No
		BROCK, MARY JO	No
		COTTRELL, L. JOHN	No
		VALINET, STEPHEN L.	No
		JACKSON, BEVERLY J.	No
		WALKER, KIMBERLY	No
		EDMONDS, DENNIS	No
		MACFARLAND, DOUGLAS	No
		BASILE, FRANK M.	No
		CANTRELL, DEAN	No
GENE B. GLICK COMPANY, INC. D/B/A GENE GLICK MANAGEMENT CORPORATION 8330 WOODFIELD CROSSING BOULEVARD, SUITE 200 INDIANAPOLIS, IN 46240 Federal Action No.: 047-44039-LDP-SUP	CAMBRIDGE SQUARE, GRAND RAPIDS ASSOCIATES II 8330 WOODFIELD CROSSING BOULEVARD SUITE 200 INDIANAPOLIS, IN 46240	MURDOCK, CHARLES	No
		THURSTON, MAX A.	No
		WOLFE, CHRISTINE	No
		BISESI, JAMES T.	No
		RAGAN, TERRI	No
		DONNELSON, DEAN	No
		COTTRELL, L. JOHN	No
		VALINET, STEPHEN L.	No
		JACKSON, BEVERLY J.	No
		WALKER, KIMBERLY	No
		EDMONDS, DENNIS	No
		FISHER, SHARON	No
		MACFARLAND, DOUGLAS	No
		BASILE, FRANK M.	No
		CANTRELL, DEAN	No
GENE B. GLICK COMPANY, INC. D/B/A GENE GLICK MANAGEMENT CORPORATION 8330 WOODFIELD CROSSING BOULEVARD, SUITE 200 INDIANAPOLIS, IN 46240 Federal Action No.: 047-44033-LDP-SUP	CAMBRIDGE SQUARE OF GRAND RAPIDS ASSOCIATES I 8330 WOODFIELD CROSSING BOULEVARD SUITE 200 INDIANAPOLIS, IN 46240	MURDOCK, CHARLES	No
		THURSTON, MAX A.	No
		WOLFE, CHRISTINE	No
		BISESI, JAMES T.	No
		RAGAN, TERRI	No
		DONNELSON, DEAN	No
		COTTRELL, L. JOHN	No
		VALINET, STEPHEN L.	No
		JACKSON, BEVERLY J.	No
		WALKER, KIMBERLY	No
		EDMONDS, DENNIS	No
		FISHER, SHARON	No
		MACFARLAND, DOUGLAS	No
		BASILE, FRANK M.	No
		CANTRELL, DEAN	No
GENE B. GLICK COMPANY, INC. D/B/A GENE GLICK MANAGEMENT CORPORATION 8330 WOODFIELD CROSSING BOULEVARD, SUITE 200 INDIANAPOLIS, IN 46240 Federal Action No.: 073-44901-LDP	MIAMI HILLS ASSOCIATES 8330 WOODFIELD CROSSING BOULEVARD SUITE 200 INDIANAPOLIS, IN 46240	MCMURTREY, JOYCE	No
		MURDOCK, CHARLES	No
		THURSTON, MAX A	No
		WOLFE, CHRISTINE	No
		BISESI, JAMES T.	No
		RAGAN, TERRI	No
		DONNELSON, DEAN	No
		COTTRELL, L. JOHN	No
		VALINET, STEPHEN L.	No
		JACKSON, BEVERLY J.	No
		WALKER, KIMBERLY	No
		EDMONDS, DENNIS	No
		MACFARLAND, DOUGLAS	No
		BASILE, FRANK M.	No
		CANTRELL, DEAN	No
GENE B. GLICK COMPANY, INC. D/B/A GENE GLICK MANAGEMENT CORPORATION 8330 WOODFIELD CROSSING BOULEVARD, SUITE 200 INDIANAPOLIS, IN 46240 Federal Action No.: 047-44028-LDP-SUP	CARRIAGE HOUSE OF MUSKEGON ASSOCIATES, L.P. 8330 WOODFIELD CROSSING BOULEVARD SUITE 200 INDIANAPOLIS, IN 46240	MURDOCK, CHARLES	No
		THURSTON, MAX A.	No
		WOLFE, CHRISTINE	No
		BISESI, JAMES T.	No
		RAGAN, TERRI	No
		DONNELSON, DEAN	No
		COTTRELL, L. JOHN	No
		VALINET, STEPHEN L.	No
		JACKSON, BEVERLY J.	No
		WALKER, KIMBERLY	No
		EDMONDS, DENNIS	No
		FISHER, SHARON	No
		MACFARLAND, DOUGLAS	No
		BASILE, FRANK M.	No
		CANTRELL, DEAN	No
GENE B. GLICK COMPANY, INC. D/B/A GENE GLICK MANAGEMENT CORPORATION 8330 WOODFIELD CROSSING BOULEVARD, SUITE 200 INDIANAPOLIS, IN 46240 Federal Action No.: 073-35292-PM-L8	CAPRI II ASSOCIATES, L.P. 8330 WOODFIELD CROSSING BOULEVARD SUITE 200 INDIANAPOLIS, IN 46240	THURSTON, MAX A.	No
		WOLFE, CHRISTINE	No
		BISESI, JAMES T.	No
		RAGAN, TERRI	No
		LEAVITT, NORMA E.	No

GENE B. GLICK COMPANY, INC. D/B/A (Continued)		DONNELSON, DEAN	No
		PACKARD, CAROL	No
		LYONS, JAMES	No
		COTTRELL, L. JOHN	No
		VALINET, STEPHEN L.	No
		JACKSON, BEVERLY J.	No
		CROSBY, PAUL	No
		WILSON, DEANA	No
		EDMONDS, DENNIS	No
		BASILE, FRANK M.	No
GENE B. GLICK COMPANY, INC. D/B/A GENE GLICK MANAGEMENT CORPORATION 8330 WOODFIELD CROSSING BOULEVARD, SUITE 200 INDIANAPOLIS, IN 46240 Federal Action No.: 083-35176-L8-PM	CAMBRIDGE SQUARE OF COVINGTON, L.P. 8330 WOODFIELD CROSSING BOULEVARD SUITE 200 INDIANAPOLIS, IN 46240	MURDOCK, CHARLES	No
		THURSTON, MAX A.	No
		WOLFE, CHRISTINE	No
		BIESEI, JAMES T.	No
		RAGAN, TERRI	No
		DONNELSON, DEAN	No
		COTTRELL, L. JOHN	No
		VALINET, STEPHEN L.	No
		JACKSON, BEVERLY J.	No
		WALKER, KIMBERLY	No
		EDMONDS, DENNIS	No
		MACFARLAND, DOUGLAS	No
		BASILE, FRANK M.	No
		KNAPP, SHARON	No
		SIMMS, DIANNE	No
		CANTRELL, DEAN	No
GENE B. GLICK COMPANY, INC. D/B/A GENE GLICK MANAGEMENT CORPORATION 8330 WOODFIELD CROSSING BOULEVARD, SUITE 200 INDIANAPOLIS, IN 46240 Federal Action No.: 083-44056	FLORENCE HOUSING ASSOCIATES, L.P. 8330 WOODFIELD CROSSING BOULEVARD SUITE 200 INDIANAPOLIS, IN 46240	MURDOCK, CHARLES	No
		THURSTON, MAX A.	No
		WOLFE, CHRISTINE	No
		BIESEI, JAMES T.	No
		RAGAN, TERRI	No
		DONNELSON, DEAN	No
		COTTRELL, L. JOHN	No
		VALINET, STEPHEN L.	No
		JACKSON, BEVERLY J.	No
		WALKER, KIMBERLY	No
		EDMONDS, DENNIS	No
		MACFARLAND, DOUGLAS	No
		BASILE, FRANK M.	No
		KNAPP, SHARON	No
		SIMMS, DIANNE	No
		CANTRELL, DEAN	No
PEPPER HAMILTON AND SCHEETZ 1300 GROUP 1300 19TH STREET, NW, SUITE 700 WASHINGTON, DC 20036-1685 Federal Action No.: 75-35325	SPRING ISLE, L.P. 1333 WAYLAND STREET BEAVER DAM, WI 53916	SCHREIBERG, SHELDON L.	No
PEPPER HAMILTON AND SCHEETZ 1300 GROUP 1300 19TH STREET, NW, SUITE 700 WASHINGTON, DC 20036-1685 Federal Action No.: 75-35346	SPRING ISLE LIMITED PARTNERSHIP II 1333 WAYLAND STREET BEAVER DAM, WI 53916	SCHREIBERG, SHELDON L.	No
PEABODY & BROWN 2300 M STREET, NW WASHINGTON, DC 20037 Federal Action No.: 102-55022	COMMERCIAL GROUP 3706 SW TOPEKA BOULEVARD SUITE 300 TOPEKA, KS 66609	PRICE, RICHARD M.	No
		STEVENS, HERBERT F.	No
PEABODY & BROWN 2300 M STREET, NW WASHINGTON, DC 20037 Federal Action No.: 061-10539-PM LIFE COLLEGE	WILSON STRICKLAND AND BENSON, P.C. ONE MIDTOWN PLAZA, SUITE 1100 1360 PEACHTREE STREET, NE ATLANTA, GA 30309-3214	PRICE, RICHARD M.	No
		EDSON, CHARLES L.	No
		WILCOX, JUSTINE E.	No
KUTAK ROCK THE OMAHA BUILDING 1650 FARNAM STREET OMAHA, NE 68102-2186 Federal Action No.: FHA 053-94015	HOUSING AUTHORITY OF THE CITY OF KINSTON 608 NORTH QUEENS STREET KINSTON, NC 28501	PETR, JOHN L.	No
		PUTNAM, RANDALL L.	No
HONIGMAN MILLER SCHWARTZ AND COHN 2290 FIRST NATIONAL BUILDING 660 WOODWARD AVENUE DETROIT, MI 48226 Federal Action No.: 143-35030	BENEFICIAL PROPERTY CORPORATION 15770 N. DALLAS PARKWAY SUITE 902 DALLAS, TX 75248	WINKELMAN, SHELDON P.	No
		BYRNES, THERESE	No
		KICKHAM, EDWARD F.	No
HONIGMAN MILLER SCHWARTZ AND COHN 2290 FIRST NATIONAL BUILDING 660 WOODWARD AVENUE DETROIT, MI 48226 Federal Action No.: 136-35600	BENEFICIAL PROPERTY CORPORATION 15770 N. DALLAS PARKWAY SUITE 902 DALLAS, TX 75248	WINKELMAN, SHELDON P.	No
		BYRNES, THERESE	No
		KICKHAM, EDWARD F.	No
HONIGMAN MILLER SCHWARTZ AND COHN 2290 FIRST NATIONAL BUILDING 660 WOODWARD AVENUE DETROIT, MI 48226 Federal Action No.: 136-35546	BENEFICIAL PROPERTY CORPORATION 15770 N. DALLAS PARKWAY SUITE 902 DALLAS, TX 75248	WINKELMAN, SHELDON P.	No
		BYRNES, THERESE	No
		KICKHAM, EDWARD F.	No

HONIGMAN MILLER SCHWARTZ AND COHN 2290 FIRST NATIONAL BUILDING 660 WOODWARD AVENUE DETROIT, MI 48226 Federal Action No.: 136-35547	BENEFICIAL PROPERTY CORPORATION 15770 N. DALLAS PARKWAY SUITE 902 DALLAS, TX 75248	WINKELMAN, SHELDON P. BYRNES, THERESE KICKHAM, EDWARD F.	No No No	
HESSEL AND ALUISE, P.C. 1050 17TH STREET, NW SUITE 900 WASHINGTON, DC 20036 Federal Action No.: 122-44253-LDP	ONTARIO TOWNHOUSES, L.P. 4340 EAST-WEST HIGHWAY SUITE 300 BETHESDA, MD 20814	GURKIN, JOANNE SCHOMER, MORTON W. ALUISE, TIMOTHY J. HESSEL, ARTHUR R. SAUNDERS, JENNIFER L. GIVISKOS, CHRISTINE S. STURMAN, SUSAN M.	No No No No No No Yes	DPEARTMENT OF HOUSING AND URBAN DEVELOPMENT STAFF ATTORNEY, MULTIFAMILY MORTGAGE DIVISION
KUTAK ROCK THE OMAHA BUILDING 1650 FARNAM STREET OMAHA, NE 68102-2186 Federal Action No.: CO99-H001-118	COLORADO HOUSING AND FINANCE AUTHORITY 1981 BLAKE STREET DENVER, CO 80202-1275	KOBER, KARILYN E. WAGNER, JOHN J.	No No	
KUTAK ROCK THE OMAHA BUILDING 1650 FARNAM STREET OMAHA, NE 68102-2186 Federal Action No.: FL29-0057-068	FLORIDA HOUSING FINANCE AGENCY 2574 SEAGATE DRIVE SUITE 101 TALLAHASSEE, FL 32301-5026	KOBER, KARILYN E. WAGNER, JOHN J.	No No	
KUTAK ROCK THE OMAHA BUILDING 1650 FARNAM STREET OMAHA, NE 68102-2186 Federal Action No.: FL29-H142-021	FLORIDA HOUSING FINANCE AGENCY 2574 SEAGATE DRIVE SUITE 101 TALLAHASSEE, FL 32301-5026	KOBER, KARILYN E. WAGNER, JOHN J.	No No	
KUTAK ROCK THE OMAHA BUILDING 1650 FARNAM STREET OMAHA, NE 68102-2186 Federal Action No.: FL29-0057-001	FLORIDA HOUSING FINANCE AGENCY 2574 SEAGATE DRIVE SUITE 101 TALLAHASSEE, FL 32301-5026	KOBER, KARILYN E. WAGNER, JOHN J.	No No	
KUTAK ROCK THE OMAHA BUILDING 1650 FARNAM STREET OMAHA, NE 68102-2186 Federal Action No.: FL29-H142-016	FLORIDA HOUSING FINANCE AGENCY 2574 SEAGATE DRIVE SUITE 101 TALLAHASSEE, FL 32301-5026	KOBER, KARILYN E. WAGNER, JOHN J.	No No	
KUTAK ROCK THE OMAHA BUILDING 1650 FARNAM STREET OMAHA, NE 68102-2186 Federal Action No.: FL29-H142-020	FLORIDA HOUSING FINANCE AGENCY 2574 SEAGATE DRIVE SUITE 101 TALLAHASSEE, FL 32301-5026	KOBER, KARILYN E. WAGNER, JOHN J.	No No	
KUTAK ROCK THE OMAHA BUILDING 1650 FARNAM STREET OMAHA, NE 68102-2186 Federal Action No.: FL29-0057-051	FLORIDA HOUSING FINANCE AGENCY 2574 SEAGATE DRIVE SUITE 101 TALLAHASSEE, FL 32301-5026	KOBER, KARILYN E. WAGNER, JOHN J.	No No	
FRANCISCAN MINISTRIES, INC. 26 WEST 171 ROOSEVELT ROAD P.O. BOX 667 WHEATON, IL 60189 Federal Action No.: 075-44052-LDP	ASSISI HOMES HOWARD WOODS, INC. 5016 WEST BURLEIGH STREET MILWAUKEE, WI 53210	CISEK, ROBERT CARLETON, LYNNELL NORDBERG, CHRISTINE SCHULTZ, PHILLIP	No No No No	
POWELL GOLDSTEIN FRAZER & MURPHY 1001 PENNSYLVANIA AVENUE, NW SUITE 600 WASHINGTON, DC 20004 Federal Action No.: CT26-8037-098	PIERCE ATWOOD AND SCRIBNER RIVER RUN, L.P. 1 MONUMENT SQUARE PORTLAND, ME 04101	KNAPP, JOHN J. FREEDMAN, ANTHONY S. SIMONS, LAWRENCE B. MCILWAIN, JOHN K.	No No No No	
POWELL GOLDSTEIN FRAZER & MURPHY 1001 PENNSYLVANIA AVENUE, NW SUITE 600 WASHINGTON, DC 20004 Federal Action No.: 031-55016	THE ASPEN GROUP, INC. WORLD TRADE CENTER SUITE 318 SAN FRANCISCO, CA 94111	KNAPP, JOHN J. FREEDMAN, ANTHONY S. SIMONS, LAWRENCE B. MCILWAIN, JOHN K.	No No No No	
POWELL GOLDSTEIN FRAZER & MURPHY 1001 PENNSYLVANIA AVENUE, NW SUITE 600 WASHINGTON, DC 20004 Federal Action No.: 067-35228	DEMETREE BROTHERS P.O. BOX 47050 JACKSONVILLE, FL 32247	KNAPP, JOHN J. FREEDMAN, ANTHONY S. SIMONS, LAWRENCE B. MCILWAIN, JOHN K.	No No No No	
POWELL GOLDSTEIN FRAZER & MURPHY 1001 PENNSYLVANIA AVENUE, NW SUITE 600 WASHINGTON, DC 20004 Federal Action No.: FHA 053-35491	CROSLAND PROPERTIES P.O. BOX 11797 135 SCALEYBARK ROAD CHARLOTTE, NC 28209	KNAPP, JOHN J. FREEDMAN, ANTHONY S. SIMONS, LAWRENCE B. MCILWAIN, JOHN K.	No No No No	

POWELL GOLDSTEIN FRAZER & MURPHY 1001 PENNSYLVANIA AVENUE, NW SUITE 600 WASHINGTON, DC 20004 Federal Action No.: FHA 071-00259	MORAN AND COMPANY 200 WEST MADISON SUITE 2700 CHICAGO, IL 60606	KNAPP, JOHN J. FREEDMAN, ANTHONY S. SIMONS, LAWRENCE B. MCILWAIN, JOHN K.	No No No No
POWELL GOLDSTEIN FRAZER & MURPHY 1001 PENNSYLVANIA AVENUE, NW SUITE 600 WASHINGTON, DC 20004 Federal Action No.: FHA 112-35052	DANMOUR AND ASSOCIATES 11730 GATEWAY BOULEVARD WEST LOS ANGELES, CA 90064	KNAPP, JOHN J. FREEDMAN, ANTHONY S. SIMONS, LAWRENCE B. MCILWAIN, JOHN K.	No No No No
POWELL GOLDSTEIN FRAZER & MURPHY 1001 PENNSYLVANIA AVENUE, NW SUITE 600 WASHINGTON, DC 20004 Federal Action No.: FHA 000-94006	RFI ASSOCIATES ARTERY PLAZA 7200 WISCONSIN AVENUE, SUITE 1006 BETHESDA, MD 20814	KNAPP, JOHN J. FREEDMAN, ANTHONY S. SIMONS, LAWRENCE B. MCILWAIN, JOHN K.	No No No No
POWELL GOLDSTEIN FRAZER & MURPHY 1001 PENNSYLVANIA AVENUE, NW SUITE 600 WASHINGTON, DC 20004 Federal Action No.: 031-55007	THE ASPEN GROUP, INC. WORLD TRADE CENTER SUITE 318 SAN FRANCISCO, CA 94111	KNAPP, JOHN J. FREEDMAN, ANTHONY S. SIMONS, LAWRENCE B. MCILWAIN, JOHN K.	No No No No
POWELL GOLDSTEIN FRAZER & MURPHY 1001 PENNSYLVANIA AVENUE, NW SUITE 600 WASHINGTON, DC 20004 Federal Action No.: 105-44009	RICHCRAINE CORPORATION ATTENTION: JEOFFREY A. MEACHAM P.O. BOX 35617 LOS GATOS, CA 95030	KNAPP, JOHN J. FREEDMAN, ANTHONY S. SIMONS, LAWRENCE B. MCILWAIN, JOHN K.	No No No No
POWELL GOLDSTEIN FRAZER & MURPHY 1001 PENNSYLVANIA AVENUE, NW SUITE 600 WASHINGTON, DC 20004 Federal Action No.: 121-10513	R & B REALTY GROUP 2222 CORINTH AVENUE LOS ANGELES, CA 90064	KNAPP, JOHN J. FREEDMAN, ANTHONY S. SIMONS, LAWRENCE B. MCILWAIN, JOHN K.	No No No No
POWELL GOLDSTEIN FRAZER & MURPHY 1001 PENNSYLVANIA AVENUE, NW SUITE 600 WASHINGTON, DC 20004 Federal Action No.: 121-10511	R & B REALTY GROUP 2222 CORINTH AVENUE LOS ANGELES, CA 90064	KNAPP, JOHN J. FREEDMAN, ANTHONY S. SIMONS, LAWRENCE B. MCILWAIN, JOHN K.	No No No No
POWELL GOLDSTEIN FRAZER & MURPHY 1001 PENNSYLVANIA AVENUE, NW SUITE 600 WASHINGTON, DC 20004 Federal Action No.: 122-10562	R & B REALTY GROUP 2222 CORINTH AVENUE LOS ANGELES, CA 90064	KNAPP, JOHN J. FREEDMAN, ANTHONY S. SIMONS, LAWRENCE B. MCILWAIN, JOHN K.	No No No No
POWELL GOLDSTEIN FRAZER & MURPHY 1001 PENNSYLVANIA AVENUE, NW SUITE 600 WASHINGTON, DC 20004 Federal Action No.: 014-16NI	LANDSMAN DEVELOPMENT CORPORATION 200 CANAL VIEW BOULEVARD ROCHESTER, NY 14623	KNAPP, JOHN J. FREEDMAN, ANTHONY S. SIMONS, LAWRENCE B. MCILWAIN, JOHN K.	No No No No
POWELL GOLDSTEIN FRAZER & MURPHY 1001 PENNSYLVANIA AVENUE, NW SUITE 600 WASHINGTON, DC 20004 Federal Action No.: 000-94136	RFI ASSOCIATES ARTERY PLAZA 7200 WISCONSIN AVENUE, SUITE 1006 BETHESDA, MD 20814	KNAPP, JOHN J. FREEDMAN, ANTHONY S. SIMONS, LAWRENCE B. MCILWAIN, JOHN K.	No No No No
LANDMAN AND BEATTY 1150 MARKET SQUARE CENTER 151 N. DELAWARE STREET INDIANAPOLIS, IN 46204-2518 Federal Action No.: 073-35162-PM	BRIARWOOD VILLAGE APARTMENTS, L.P. 8330 WOODFIELD CROSSING BOULEVARD SUITE 200 INDIANAPOLIS, IN 46240	BEATTY, JAMES W. BEATTY, J. F. MCCARTY, VIRGINIA DILL GULLICK, ROBERT H.	No No No No
LANDMAN AND BEATTY 1150 MARKET SQUARE CENTER 151 N. DELAWARE STREET INDIANAPOLIS, IN 46204-2518 Federal Action No.: 083-44056	FLORENCE HOUSING ASSOCIATES, L.P. 8330 WOODFIELD CROSSING BOULEVARD SUITE 200 INDIANAPOLIS, IN 46240	BEATTY, JAMES W. BEATTY, J. F. MCCARTY, VIRGINIA DILL GULLICK, ROBERT H.	No No No No
LANDMAN AND BEATTY 1150 MARKET SQUARE CENTER 151 N. DELAWARE STREET INDIANAPOLIS, IN 46204-2518 Federal Action No.: 043-44055-LDP/SUP	COLUMBUS HOUSING ASSOCIATES, L.P. 8330 WOODFIELD CROSSING BOULEVARD SUITE 200 INDIANAPOLIS, IN 46240	BEATTY, JAMES W. BEATTY, J. F. MCCARTY, VIRGINIA DILL GULLICK, ROBERT H.	No No No No
LANDMAN AND BEATTY 1150 MARKET SQUARE CENTER 151 N. DELAWARE STREET INDIANAPOLIS, IN 46204-2518 Federal Action No.: 073-44395-LDP	CAPRI MEADOWS ASSOCIATES, L.P. 8330 WOODFIELD CROSSING BOULEVARD SUITE 200 INDIANAPOLIS, IN 46240	BEATTY, JAMES W. BEATTY, J. F. MCCARTY, VIRGINIA DILL GULLICK, ROBERT H.	No No No No
LANDMAN AND BEATTY 1150 MARKET SQUARE CENTER 151 N. DELAWARE STREET INDIANAPOLIS, IN 46204-2518 Federal Action No.: 092-44035-LD	CARRIAGE HOUSE ASSOCIATES, L.P. 8330 WOODFIELD CROSSING BOULEVARD SUITE 200 INDIANAPOLIS, IN 46240	BEATTY, JAMES W. BEATTY, J. F. MCCARTY, VIRGINIA DILL GULLICK, ROBERT H.	No No No No

LANDMAN AND BEATTY 1150 MARKET SQUARE CENTER 151 N. DELAWARE STREET INDIANAPOLIS, IN 46204-2518 Federal Action No.: 073-35233-PM-L8	CAMBRIDGE SQUARE OF MUNCIE, L.P. 8330 WOODFIELD CROSSING BOULEVARD SUITE 200 INDIANAPOLIS, IN 46240	BEATTY, JAMES W. BEATTY, J. F. MCCARTY, VIRGINIA DILL GULLICK, ROBERT H.	No No No No
LANDMAN AND BEATTY 1150 MARKET SQUARE CENTER 151 N. DELAWARE STREET INDIANAPOLIS, IN 46204-2518 Federal Action No.: 083-35176-L8-PM	CAMBRIDGE SQUARE OF COVINGTON, L.P. 8330 WOODFIELD CROSSING BOULEVARD SUITE 200 INDIANAPOLIS, IN 46240	BEATTY, JAMES W. BEATTY, J. F. MCCARTY, VIRGINIA DILL GULLICK, ROBERT H.	No No No No
LANDMAN AND BEATTY 1150 MARKET SQUARE CENTER 151 N. DELAWARE STREET INDIANAPOLIS, IN 46204-2518 Federal Action No.: 073-35247-PM-L8	CAMBRIDGE SQUARE OF BEECH GROVE, L.P. 8330 WOODFIELD CROSSING BOULEVARD SUITE 200 INDIANAPOLIS, IN 46240	BEATTY, JAMES W. BEATTY, J. F. MCCARTY, VIRGINIA DILL GULLICK, ROBERT H.	No No No No
LANDMAN AND BEATTY 1150 MARKET SQUARE CENTER 151 N. DELAWARE STREET INDIANAPOLIS, IN 46204-2518 Federal Action No.: 073-35190-PM	BRIARWOOD APARTMENTS II, L.P. 8330 WOODFIELD CROSSING BOULEVARD SUITE 200 INDIANAPOLIS, IN 46240	BEATTY, JAMES W. BEATTY, J. F. MCCARTY, VIRGINIA DILL GULLICK, ROBERT H.	No No No No
LANDMAN AND BEATTY 1150 MARKET SQUARE CENTER 151 N. DELAWARE STREET INDIANAPOLIS, IN 46204-2518 Federal Action No.: 073-35249-PM-L8	THE EDSALL HOUSE, L.P. 8330 WOODFIELD CROSSING BOULEVARD SUITE 200 INDIANAPOLIS, IN 46240	BEATTY, JAMES W. BEATTY, J. F. MCCARTY, VIRGINIA DILL GULLICK, ROBERT H.	No No No No
LANDMAN AND BEATTY 1150 MARKET SQUARE CENTER 151 N. DELAWARE STREET INDIANAPOLIS, IN 46204-2518 Federal Action No.: 048-44028-LD	CAMBRIDGE SQUARE OF FLINT ASSOCIATES, L.P. 8330 WOODFIELD CROSSING BOULEVARD SUITE 200 INDIANAPOLIS, IN 46240	BEATTY, JAMES W. BEATTY, J. F. MCCARTY, VIRGINIA DILL GULLICK, ROBERT H.	No No No No
LANDMAN AND BEATTY 1150 MARKET SQUARE CENTER 151 N. DELAWARE STREET INDIANAPOLIS, IN 46204-2518 Federal Action No.: 073-35211-PM	CAMBRIDGE SQUARE OF LAPORTE, L.P. 8330 WOODFIELD CROSSING BOULEVARD SUITE 200 INDIANAPOLIS, IN 46240	BEATTY, JAMES W. BEATTY, J. F. MCCARTY, VIRGINIA DILL GULLICK, ROBERT H.	No No No No
LANDMAN AND BEATTY 1150 MARKET SQUARE CENTER 151 N. DELAWARE STREET INDIANAPOLIS, IN 46204-2518 Federal Action No.: 073-35240-PM-L8	CARRIAGE HOUSE OF LAPORTE, L.P. 8330 WOODFIELD CROSSING BOULEVARD SUITE 200 INDIANAPOLIS, IN 46240	BEATTY, JAMES W. BEATTY, J. F. MCCARTY, VIRGINIA DILL GULLICK, ROBERT H.	No No No No
LANDMAN AND BEATTY 1150 MARKET SQUARE CENTER 151 N. DELAWARE STREET INDIANAPOLIS, IN 46204-2518 Federal Action No.: 047-44028-LDP-SUP	CARRIAGE HOUSE OF MUSKEGON ASSOCIATES, L.P. 8330 WOODFIELD CROSSING BOULEVARD SUITE 200 INDIANAPOLIS, IN 46240	BEATTY, JAMES W. BEATTY, J. F. MCCARTY, VIRGINIA DILL GULLICK, ROBERT H.	No No No No
LANDMAN AND BEATTY 1150 MARKET SQUARE CENTER 151 N. DELAWARE STREET INDIANAPOLIS, IN 46204-2518 Federal Action No.: 073-44901-LDP	MIAMI HILLS ASSOCIATES, L.P. 8330 WOODFIELD CROSSING BOULEVARD SUITE 200 INDIANAPOLIS, IN 46240	BEATTY, JAMES W. BEATTY, J. F. MCCARTY, VIRGINIA DILL GULLICK, ROBERT H.	No No No No
LANDMAN AND BEATTY 1150 MARKET SQUARE CENTER 151 N. DELAWARE STREET INDIANAPOLIS, IN 46204-2518 Federal Action No.: 073-35292-PM-L8	CAPRI II ASSOCIATES, L.P. 8330 WOODFIELD CROSSING BOULEVARD SUITE 200 INDIANAPOLIS, IN 46240	BEATTY, JAMES W. BEATTY, J. F. MCCARTY, VIRGINIA DILL GULLICK, ROBERT H.	No No No No
LANDMAN AND BEATTY 1150 MARKET SQUARE CENTER 151 N. DELAWARE STREET INDIANAPOLIS, IN 46204-2518 Federal Action No.: 047-44033-LDP-SUP	CAMBRIDGE SQUARE OF GRAND RAPIDS ASSOCIATES I 8330 WOODFIELD CROSSING BOULEVARD SUITE 200 INDIANAPOLIS, IN 46240	BEATTY, JAMES W. BEATTY, J. F. MCCARTY, VIRGINIA DILL GULLICK, ROBERT H.	No No No No
LANDMAN AND BEATTY 1150 MARKET SQUARE CENTER 151 N. DELAWARE STREET INDIANAPOLIS, IN 46204-2518 Federal Action No.: 047-44039-LDP-SUP	CAMBRIDGE SQUARE, GRAND RAPIDS ASSOCIATES II 8330 WOODFIELD CROSSING BOULEVARD SUITE 200 INDIANAPOLIS, IN 46240	BEATTY, JAMES W. BEATTY, J. F. MCCARTY, VIRGINIA DILL GULLICK, ROBERT H.	No No No No
LANDMAN AND BEATTY 1150 MARKET SQUARE CENTER 151 N. DELAWARE STREET INDIANAPOLIS, IN 46204-2518 Federal Action No.: 073-35431-PM-L8	CARRIAGE HOUSE OF LAPORTE II, L.P. 8330 WOODFIELD CROSSING BOULEVARD SUITE 200 INDIANAPOLIS, IN 46240	BEATTY, JAMES W. BEATTY, J. F. MCCARTY, VIRGINIA DILL GULLICK, ROBERT H.	No No No No
LANDMAN AND BEATTY 1150 MARKET SQUARE CENTER 151 N. DELAWARE STREET INDIANAPOLIS, IN 46204-2518 Federal Action No.: 073-35251-PM-L8	JAMESTOWN OF VALPARAISO, L.P. 8330 WOODFIELD CROSSING BOULEVARD SUITE 200 INDIANAPOLIS, IN 46240	BEATTY, JAMES W. BEATTY, J. F. MCCARTY, VIRGINIA DILL GULLICK, ROBERT H.	No No No No

LANDMAN AND BEATTY 1150 MARKET SQUARE CENTER 151 N. DELAWARE STREET INDIANAPOLIS, IN 46204-2518 Federal Action No.: 073-35408-PM-L8	CARRIAGE HOUSE OF LAFAYETTE ASSOCIATES, L.P. 8330 WOODFIELD CROSSING BOULEVARD SUITE 200 INDIANAPOLIS, IN 46240	BEATTY, JAMES W. BEATTY, J. F. MCCARTY, VIRGINIA DILL GULLICK, ROBERT H.	No No No No
LANDMAN AND BEATTY 1150 MARKET SQUARE CENTER 151 N. DELAWARE STREET INDIANAPOLIS, IN 46204-2518 Federal Action No.: 073-35262-PM-L8	FAIRINGTON APARTMENTS OF LAFAYETTE, L.P. 8330 WOODFIELD CROSSING BOULEVARD SUITE 200 INDIANAPOLIS, IN 46240	BEATTY, JAMES W. BEATTY, J. F. MCCARTY, VIRGINIA DILL GULLICK, ROBERT H.	No No No No
LANDMAN AND BEATTY 1150 MARKET SQUARE CENTER 151 N. DELAWARE STREET INDIANAPOLIS, IN 46204-2518 Federal Action No.: 073-35358-PM-L8	RICHFIELD APARTMENTS OF WEST LAFAYETTE, L.P. 8330 WOODFIELD CROSSING BOULEVARD SUITE 200 INDIANAPOLIS, IN 46240	BEATTY, JAMES W. BEATTY, J. F. MCCARTY, VIRGINIA DILL GULLICK, ROBERT H.	No No No No
LANDMAN AND BEATTY 1150 MARKET SQUARE CENTER 151 N. DELAWARE STREET INDIANAPOLIS, IN 46204-2518 Federal Action No.: 073-35244-PM-L8	CAMBRIDGE SQUARE OF RICHMOND, L.P. 8330 WOODFIELD CROSSING BOULEVARD SUITE 200 INDIANAPOLIS, IN 46240	BEATTY, JAMES W. BEATTY, J. F. MCCARTY, VIRGINIA DILL GULLICK, ROBERT H.	No No No No
LANDMAN AND BEATTY 1150 MARKET SQUARE CENTER 151 N. DELAWARE STREET INDIANAPOLIS, IN 46204-2518 Federal Action No.: 073-35450-PM-L8	CARRIAGE HOUSE OF MUNCIE, L.P. 8330 WOODFIELD CROSSING BOULEVARD SUITE 200 INDIANAPOLIS, IN 46240	BEATTY, JAMES W. BEATTY, J. F. MCCARTY, VIRGINIA DILL GULLICK, ROBERT H.	No No No No
LANDMAN AND BEATTY 1150 MARKET SQUARE CENTER 151 N. DELAWARE STREET INDIANAPOLIS, IN 46204-2518 Federal Action No.: 073-35360-PM-L8	CARRIAGE HOUSE OF RICHMOND, L.P. 8330 WOODFIELD CROSSING BOULEVARD SUITE 200 INDIANAPOLIS, IN 46240	BEATTY, JAMES W. BEATTY, J. F. MCCARTY, VIRGINIA DILL GULLICK, ROBERT H.	No No No No
LANDMAN AND BEATTY 1150 MARKET SQUARE CENTER 151 N. DELAWARE STREET INDIANAPOLIS, IN 46204-2518 Federal Action No.: 073-35229-PM-L8	CAMBRIDGE SQUARE OF MARION, L.P. 8330 WOODFIELD CROSSING BOULEVARD SUITE 200 INDIANAPOLIS, IN 46240	BEATTY, JAMES W. BEATTY, J. F. MCCARTY, VIRGINIA DILL GULLICK, ROBERT H.	No No No No
LANDMAN AND BEATTY 1150 MARKET SQUARE CENTER 151 N. DELAWARE STREET INDIANAPOLIS, IN 46204-2518 Federal Action No.: 073-35245-PM-L8	CAMBRIDGE SQUARE OF ANDERSON, L.P. 8330 WOODFIELD CROSSING BOULEVARD SUITE 200 INDIANAPOLIS, IN 46240	BEATTY, JAMES W. BEATTY, J. F. MCCARTY, VIRGINIA DILL GULLICK, ROBERT H.	No No No No
LANDMAN AND BEATTY 1150 MARKET SQUARE CENTER 151 N. DELAWARE STREET INDIANAPOLIS, IN 46204-2518 Federal Action No.: 042-35240-PM-L8	BRIARWOOD APARTMENTS OF TOLEDO, L.P. 8330 WOODFIELD CROSSING BOULEVARD SUITE 200 INDIANAPOLIS, IN 46240	BEATTY, JAMES W. BEATTY, J. F. MCCARTY, VIRGINIA DILL GULLICK, ROBERT H.	No No No No
LANDMAN AND BEATTY 1150 MARKET SQUARE CENTER 151 N. DELAWARE STREET INDIANAPOLIS, IN 46204-2518 Federal Action No.: 054-35419-PM-PAH-L8	CARRIAGE HOUSE OF COLUMBIA, L.P. 8330 WOODFIELD CROSSING BOULEVARD SUITE 200 INDIANAPOLIS, IN 46240	BEATTY, JAMES W. BEATTY, J. F. MCCARTY, VIRGINIA DILL GULLICK, ROBERT H.	No No No No
LANDMAN AND BEATTY 1150 MARKET SQUARE CENTER 151 N. DELAWARE STREET INDIANAPOLIS, IN 46204-2518 Federal Action No.: 083-35249-L8-PM-WAH	BLAIRWOOD APARTMENTS OF LOUISVILLE, L.P. 8330 WOODFIELD CROSSING BOULEVARD SUITE 200 INDIANAPOLIS, IN 46240	BEATTY, JAMES W. BEATTY, J. F. MCCARTY, VIRGINIA DILL GULLICK, ROBERT H.	No No No No
LANDMAN AND BEATTY 1150 MARKET SQUARE CENTER 151 N. DELAWARE STREET INDIANAPOLIS, IN 46204-2518 Federal Action No.: 083-35191-L8-PM-WAH	FAIRINGTON APARTMENTS OF LOUISVILLE, L.P. 8330 WOODFIELD CROSSING BOULEVARD SUITE 200 INDIANAPOLIS, IN 46240	BEATTY, JAMES W. BEATTY, J. F. MCCARTY, VIRGINIA DILL GULLICK, ROBERT H.	No No No No
HOLLAND AND KNIGHT 2100 PENNSYLVANIA AVENUE, NW SUITE 400 WASHINGTON, DC 20037-3202 Federal Action No.: FHA 000-10678	CSB ASSOCIATES MANAGEMENT CORPORATION P.O. BOX 647 RIVERDALE, MD 20738	LEVINE, JERRY DUNNELLS, G. RICHARD NILES, STEPHEN D. PARNET, SUZANNE H. FELTER, CAROLYN P. NESBITT, LA FONTE STERLING, SCOTT A.	No No No No No No No
HOLLAND AND KNIGHT 2100 PENNSYLVANIA AVENUE, NW SUITE 400 WASHINGTON, DC 20037-3202 Federal Action No.: 087-35091-PM-L8	KNOXVILLE COMMUNITY DEVELOPMENT CORPORATION P.O. BOX 3550 KNOXVILLE, TN 37927-3550	LEVINE, JERRY DUNNELLS, G. RICHARD NILES, STEPHEN D. PARNET, SUZANNE H. FELTER, CAROLYN P. NESBITT, LA FONTE STERLING, SCOTT A.	No No No No No No No

OLLAND AND KNIGHT !100 PENNSYLVANIA AVENUE, NW UITE 400 ASHINGTON, DC 20037-3202 'ederal Action No.: FHA 053-94004	INSIGNIA FINANCIAL GROUP 1 INSIGNIA FINANCIAL PLAZA GREENVILLE, SC 29602	LEVINE, JERRY DUNNELLS, G. RICHARD MILES, STEPHEN D. PARMET, SUZANNE H. FELTER, CAROLYN P. MESSITT, LA FONTE STERLING, SCOTT A.	No No No No No No No
OLLAND AND KNIGHT !100 PENNSYLVANIA AVENUE, NW UITE 400 ASHINGTON, DC 20037-3202 'ederal Action No.: FHA 000-55095	INSIGNIA FINANCIAL GROUP 1 INSIGNIA FINANCIAL PLAZA GREENVILLE, SC 29602	LEVINE, JERRY DUNNELLS, G. RICHARD MILES, STEPHEN D. PARMET, SUZANNE H. FELTER, CAROLYN P. MESSITT, LA FONTE STERLING, SCOTT A.	No No No No No No No
OLLAND AND KNIGHT !100 PENNSYLVANIA AVENUE, NW UITE 400 ASHINGTON, DC 20037-3202 'ederal Action No.: MHFA 72-013-M	BOSTON FINANCIAL GROUP, INC. ATTENTION: PETER RICHARDSON 101 ARCH STREET BOSTON, MA 02110-1106	LEVINE, JERRY DUNNELLS, G. RICHARD MILES, STEPHEN D. PARMET, SUZANNE H. FELTER, CAROLYN P. MESSITT, LA FONTE STERLING, SCOTT A.	No No No No No No No
OLLAND AND KNIGHT !100 PENNSYLVANIA AVENUE, NW UITE 400 ASHINGTON, DC 20037-3202 'ederal Action No.: MH46-8023-007	SECURITY PROPERTIES, INC. 1601 FIFTH AVENUE SUITE 1900 SEATTLE, WA 98101	LEVINE, JERRY DUNNELLS, G. RICHARD MILES, STEPHEN D. PARMET, SUZANNE H. FELTER, CAROLYN P. MESSITT, LA FONTE STERLING, SCOTT A.	No No No No No No No
OLLAND AND KNIGHT !100 PENNSYLVANIA AVENUE, NW UITE 400 ASHINGTON, DC 20037-3202 'ederal Action No.: FHA 054-35554	DARBY DEVELOPMENT COMPANY 4142 DORCHESTER ROAD CHARLESTON, SC 29405	LEVINE, JERRY DUNNELLS, G. RICHARD MILES, STEPHEN D. PARMET, SUZANNE H. FELTER, CAROLYN P. MESSITT, LA FONTE STERLING, SCOTT A.	No No No No No No No
OLLAND AND KNIGHT 100 PENNSYLVANIA AVENUE, NW UITE 400 ASHINGTON, DC 20037-3202 ederal Action No.: FHA 087-35124-PM-L8	KNOXVILLE COMMUNITY DEVELOPMENT CORPORATION P.O. BOX 3550 KNOXVILLE, TN 37927-3550	LEVINE, JERRY DUNNELLS, G. RICHARD MILES, STEPHEN D. PARMET, SUZANNE H. FELTER, CAROLYN P. MESSITT, LA FONTE STERLING, SCOTT A.	No No No No No No No
OLLAND AND KNIGHT 100 PENNSYLVANIA AVENUE, NW UITE 400 ASHINGTON, DC 20037-3202 ederal Action No.: FHA 071-94012 (36602)	TERRACE LAKES APARTMENTS MELLON MORTGAGE COMPANY 1422 EUCLID AVENUE, SUITE 900 CLEVELAND, OH 44115-2092	LEVINE, JERRY DUNNELLS, G. RICHARD MILES, STEPHEN D. PARMET, SUZANNE H. FELTER, CAROLYN P. MESSITT, LA FONTE STERLING, SCOTT A.	No No No No No No No
HE MARCUS LAW FIRM 11 WHITNEY AVENUE EW HAVEN, CT 06510 ederal Action No.: AUDIT 93-B0214-1013	CARABETTA MANAGEMENT COMPANY ATTENTION: JOSEPH F. CARABETTA 200 PRATT STREET MERIDEN, CT 06450	MARCUS, EDWARD L. STEINBERGER, RITA A. BERGAMO, MARK L.	No No No
HE MARCUS LAW FIRM 11 WHITNEY AVENUE EW HAVEN, CT 06510 ederal Action No.: 023-35302	INTEGRATED RESOURCES, INC. 200 PRATT STREET MERIDEN, CT 06450	MARCUS, EDWARD L. STEINBERGER, RITA A. BERGAMO, MARK L.	No No No
OLLAND AND KNIGHT 100 PENNSYLVANIA AVENUE, NW UITE 400 ASHINGTON, DC 20037-3202 ederal Action No.: 125-35091-PM-L8	H&O PROPERTIES 28809 DRAPPER COURT HIGHLAND, CA 92346	LEVINE, JERRY DUNNELLS, G. RICHARD MILES, STEPHEN D. PARMET, SUZANNE H. FELTER, CAROLYN P. MESSITT, LA FONTE STERLING, SCOTT A.	No No No No No No No
OLLAND AND KNIGHT 100 PENNSYLVANIA AVENUE, NW UITE 400 ASHINGTON, DC 20037-3202 ederal Action No.: 053-94004	INSIGNIA FINANCIAL GROUP 1 INSIGNIA FINANCIAL PLAZA GREENVILLE, SC 29602	LEVINE, JERRY DUNNELLS, G. RICHARD MILES, STEPHEN D. PARMET, SUZANNE H. FELTER, CAROLYN P. MESSITT, LA FONTE STERLING, SCOTT A.	No No No No No No No
OLLAND AND KNIGHT 100 PENNSYLVANIA AVENUE, NW UITE 400 ASHINGTON, DC 20037-3202 ederal Action No.: 000-94009-HRD	MYCOR INCORPORATED ATTENTION: FRED MYERS 109 HOLIDAY PARK, SUITE B-4 FRANKLIN, TN 37064	LEVINE, JERRY DUNNELLS, G. RICHARD MILES, STEPHEN D. PARMET, SUZANNE H. FELTER, CAROLYN P. MESSITT, LA FONTE STERLING, SCOTT A.	No No No No No No No

HOLLAND AND KNIGHT 2100 PENNSYLVANIA AVENUE, NW SUITE 400 WASHINGTON, DC 20037-3202 Federal Action No.: 114-94009-HRD	STONE MOUNTAIN PROPERTIES 806 MORRIS TURNPIKE P.O. BOX 405 SHORT HILLS, NJ 07078	LEVINE, JERRY DUNNELLS, G. RICHARD NILES, STEPHEN D. PARNET, SUZANNE H. FELTER, CAROLYN P. MERRITT, LA FONTE STERLING, SCOTT A.	No No No No No No No
HOLLAND AND KNIGHT 2100 PENNSYLVANIA AVENUE, NW SUITE 400 WASHINGTON, DC 20037-3202 Federal Action No.: FHA 000-10607	OXON RUN ASSOCIATES, L.P. MID CITY FINANCIAL CORPORATION 4340 EAST-WEST HIGHWAY, SUITE 300 BETHESDA, MD 20814	LEVINE, JERRY DUNNELLS, G. RICHARD NILES, STEPHEN D. PARNET, SUZANNE H. FELTER, CAROLYN P. MERRITT, LA FONTE STERLING, SCOTT A.	No No No No No No No
HOLLAND AND KNIGHT 2100 PENNSYLVANIA AVENUE, NW SUITE 400 WASHINGTON, DC 20037-3202 Federal Action No.: FHA 085-35285	FOX HILL PARTNERS PIERRE LACLEDE CENTER 7701 FORSYTH BOULEVARD, SUITE 900 ST. LOUIS, MO 63105-1813	LEVINE, JERRY DUNNELLS, G. RICHARD NILES, STEPHEN D. PARNET, SUZANNE H. FELTER, CAROLYN P. MERRITT, LA FONTE STERLING, SCOTT A.	No No No No No No No
HOLLAND AND KNIGHT 2100 PENNSYLVANIA AVENUE, NW SUITE 400 WASHINGTON, DC 20037-3202 Federal Action No.: FHA 062-35342	INSIGNIA FINANCIAL GROUP 1 INSIGNIA FINANCIAL PLAZA GREENVILLE, SC 29602	LEVINE, JERRY DUNNELLS, G. RICHARD NILES, STEPHEN D. PARNET, SUZANNE H. FELTER, CAROLYN P. MERRITT, LA FONTE STERLING, SCOTT A.	No No No No No No No
HOLLAND AND KNIGHT 2100 PENNSYLVANIA AVENUE, NW SUITE 400 WASHINGTON, DC 20037-3202 Federal Action No.: FHA 012-94004-HRD	135 W. KINGSBRIDGE ASSOCIATES TIME EQUITIES, INC. 55 FIFTH AVENUE NEW YORK, NY 10003	LEVINE, JERRY DUNNELLS, G. RICHARD NILES, STEPHEN D. PARNET, SUZANNE H. FELTER, CAROLYN P. MERRITT, LA FONTE STERLING, SCOTT A.	No No No No No No No
GENE B. GLICK COMPANY, INC. D/B/A GENE GLICK MANAGEMENT CORPORATION 8330 WOODFIELD CROSSING BOULEVARD, SUITE 200 INDIANAPOLIS, IN 46240 Federal Action No.: 083-35191-L8-PM-WAH	FAIRINGTON APARTMENTS OF LOUISVILLE, L.P. 8330 WOODFIELD CROSSING BOULEVARD SUITE 200 INDIANAPOLIS, IN 46240	MURDOCK, CHARLES THURSTON, MAX A. WOLFE, CHRISTINE BIERSI, JAMES T. RAGAN, TERRI DONNELSON, DEAN COTTRELL, L. JOHN VALIENT, STEPHEN L. JACKSON, BEVERLY J. EDMONDS, DENNIS MACFARLAND, DOUGLAS BASILE, FRANK M. KRAPP, SHARON SIMMS, DIANNE CANTRELL, DEAN HOUSTON, KIMBERLY	No No No No No No No No No No No No No No No No
GENE B. GLICK COMPANY, INC. D/B/A GENE GLICK MANAGEMENT CORPORATION 8330 WOODFIELD CROSSING BOULEVARD, SUITE 200 INDIANAPOLIS, IN 46240 Federal Action No.: 083-35249-L8-PM-WAH	BLAIRWOOD APARTMENTS OF LOUISVILLE, L.P. 8330 WOODFIELD CROSSING BOULEVARD SUITE 200 INDIANAPOLIS, IN 46240	MURDOCK, CHARLES THURSTON, MAX A. WOLFE, CHRISTINE BIERSI, JAMES T. RAGAN, TERRI DONNELSON, DEAN COTTRELL, L. JOHN VALIENT, STEPHEN L. JACKSON, BEVERLY J. EDMONDS, DENNIS MACFARLAND, DOUGLAS BASILE, FRANK M. KRAPP, SHARON SIMMS, DIANNE CANTRELL, DEAN HOUSTON, KIMBERLY	No No No No No No No No No No No No No No No No
GENE B. GLICK COMPANY, INC. D/B/A GENE GLICK MANAGEMENT CORPORATION 8330 WOODFIELD CROSSING BOULEVARD, SUITE 200 INDIANAPOLIS, IN 46240 Federal Action No.: 054-35419-PM-PAH-L8	CARRIAGE HOUSE OF COLUMBIA, L.P. 8330 WOODFIELD CROSSING BOULEVARD SUITE 200 INDIANAPOLIS, IN 46240	KELLEY, JOE THURSTON, MAX A. WOLFE, CHRISTINE BIERSI, JAMES T. RAGAN, TERRI MACFARLAND, BELENDA DONNELSON, DEAN COTTRELL, L. JOHN VALIENT, STEPHEN L. JACKSON, BEVERLY J. SKINNER, MICHELLE EDMONDS, DENNIS BASILE, FRANK M. JONES, STEPHANIE ANTHON, DAVID	No No No No No No No No No No No No No No No

GENE B. GLICK COMPANY, INC. D/B/A GENE GLICK MANAGEMENT CORPORATION 8330 WOODFIELD CROSSING BOULEVARD, SUITE 200 INDIANAPOLIS, IN 46240 Federal Action No.: 042-35240-PM-L8	BRIARWOOD APARTMENTS OF TOLEDO, L.P. 8330 WOODFIELD CROSSING BOULEVARD SUITE 200 INDIANAPOLIS, IN 46240	MURDOCK, CHARLES THURSTON, MAX A. WOLFE, CHRISTINE BIESZI, JAMES T. RAGAN, TERRI DONNELSON, DEAN COTTRELL, L. JOHN VALINET, STEPHEN L. JACKSON, BEVERLY J. EDMONDS, DENNIS FISHER, SHARON MACFARLAND, DOUGLAS BASILE, FRANK M. CANTRELL, DEAN HOUSTON, KIMBERLY	No No No No No No No No No No No No No No No
GENE B. GLICK COMPANY, INC. D/B/A GENE GLICK MANAGEMENT CORPORATION 8330 WOODFIELD CROSSING BOULEVARD, SUITE 200 INDIANAPOLIS, IN 46240 Federal Action No.: 073-35245-PM-L8	CAMBRIDGE SQUARE OF ANDERSON, L.P. 8330 WOODFIELD CROSSING BOULEVARD SUITE 200 INDIANAPOLIS, IN 46240	MURDOCK, CHARLES THURSTON, MAX A. WOLFE, CHRISTINE BIESZI, JAMES T. RAGAN, TERRI DONNELSON, DEAN BROCK, MARY JO COTTRELL, L. JOHN VALINET, STEPHEN L. JACKSON, BEVERLY J. EDMONDS, DENNIS MACFARLAND, DOUGLAS BASILE, FRANK M. CANTRELL, DEAN HOUSTON, KIMBERLY	No No No No No No No No No No No No No No No
GENE B. GLICK COMPANY, INC. D/B/A GENE GLICK MANAGEMENT CORPORATION 8330 WOODFIELD CROSSING BOULEVARD, SUITE 200 INDIANAPOLIS, IN 46240 Federal Action No.: 073-35229-PM-L8	CAMBRIDGE SQUARE OF MARION, L.P. 8330 WOODFIELD CROSSING BOULEVARD SUITE 200 INDIANAPOLIS, IN 46240	MURDOCK, CHARLES THURSTON, MAX A. WOLFE, CHRISTINE BIESZI, JAMES T. RAGAN, TERRI DONNELSON, DEAN BROCK, MARY JO COTTRELL, L. JOHN VALINET, STEPHEN L. JACKSON, BEVERLY J. EDMONDS, DENNIS MACFARLAND, DOUGLAS BASILE, FRANK M. CANTRELL, DEAN HOUSTON, KIMBERLY	No No No No No No No No No No No No No No No
GENE B. GLICK COMPANY, INC. D/B/A GENE GLICK MANAGEMENT CORPORATION 8330 WOODFIELD CROSSING BOULEVARD, SUITE 200 INDIANAPOLIS, IN 46240 Federal Action No.: 073-35360-PM-L8	CARRIAGE HOUSE OF RICHMOND, L.P. 8330 WOODFIELD CROSSING BOULEVARD SUITE 200 INDIANAPOLIS, IN 46240	MURDOCK, CHARLES THURSTON, MAX A. WOLFE, CHRISTINE BIESZI, JAMES T. RAGAN, TERRI DONNELSON, DEAN BROCK, MARY JO COTTRELL, L. JOHN VALINET, STEPHEN L. JACKSON, BEVERLY J. EDMONDS, DENNIS MACFARLAND, DOUGLAS BASILE, FRANK M. CANTRELL, DEAN HOUSTON, KIMBERLY	No No No No No No No No No No No No No No No
GENE B. GLICK COMPANY, INC. D/B/A GENE GLICK MANAGEMENT CORPORATION 8330 WOODFIELD CROSSING BOULEVARD, SUITE 200 INDIANAPOLIS, IN 46240 Federal Action No.: 073-35450-PM-L8	CARRIAGE HOUSE OF MUNCIE, L.P. 8330 WOODFIELD CROSSING BOULEVARD SUITE 200 INDIANAPOLIS, IN 46240	MURDOCK, CHARLES THURSTON, MAX A. WOLFE, CHRISTINE BIESZI, JAMES T. RAGAN, TERRI DONNELSON, DEAN BROCK, MARY JO COTTRELL, L. JOHN VALINET, STEPHEN L. JACKSON, BEVERLY J. EDMONDS, DENNIS MACFARLAND, DOUGLAS BASILE, FRANK M. CANTRELL, DEAN HOUSTON, KIMBERLY	No No No No No No No No No No No No No No No
GENE B. GLICK COMPANY, INC. D/B/A GENE GLICK MANAGEMENT CORPORATION 8330 WOODFIELD CROSSING BOULEVARD, SUITE 200 INDIANAPOLIS, IN 46240 Federal Action No.: 073-35244-PM-L8	CAMBRIDGE SQUARE OF RICHMOND, L.P. 8330 WOODFIELD CROSSING BOULEVARD SUITE 200 INDIANAPOLIS, IN 46240	MURDOCK, CHARLES THURSTON, MAX A. WOLFE, CHRISTINE BIESZI, JAMES T. RAGAN, TERRI DONNELSON, DEAN BROCK, MARY JO COTTRELL, L. JOHN VALINET, STEPHEN L. JACKSON, BEVERLY J. EDMONDS, DENNIS MACFARLAND, DOUGLAS	No No No No No No No No No No No No

GENE B. GLICK COMPANY, INC. D/B/A (Continued)		BASILE, FRANK M.	No
		CANTRELL, DEAN	No
		HOUSTON, KIMBERLY	No
GENE B. GLICK COMPANY, INC. D/B/A GENE GLICK MANAGEMENT CORPORATION 8330 WOODFIELD CROSSING BOULEVARD, SUITE 200 INDIANAPOLIS, IN 46240 Federal Action No.: 073-35358-PM-L8	RICHFIELD APARTMENTS OF WEST LAFAYETTE, L.P. 8330 WOODFIELD CROSSING BOULEVARD SUITE 200 INDIANAPOLIS, IN 46240	MURDOCK, CHARLES	No
		THURSTON, MAX A.	No
		WOLFE, CHRISTINE	No
		BISESI, JAMES T.	No
		RAGAN, TERRI	No
		DONNELSON, DEAN	No
		DEBOY, PHYLLIS	No
		COTTRELL, L. JOHN	No
		VALINET, STEPHEN L.	No
		JACKSON, BEVERLY J.	No
		EDMONDS, DENNIS	No
		MACFARLAND, DOUGLAS	No
		BASILE, FRANK M.	No
		CANTRELL, DEAN	No
		HOUSTON, KIMBERLY	No
GENE B. GLICK COMPANY, INC. D/B/A GENE GLICK MANAGEMENT CORPORATION 8330 WOODFIELD CROSSING BOULEVARD, SUITE 200 INDIANAPOLIS, IN 46240 Federal Action No.: 073-35262-PM-L8	FAIRINGTON APARTMENTS OF LAFAYETTE, L.P. 8330 WOODFIELD CROSSING BOULEVARD SUITE 200 INDIANAPOLIS, IN 46240	MURDOCK, CHARLES	No
		THURSTON, MAX A.	No
		WOLFE, CHRISTINE	No
		BISESI, JAMES T.	No
		RAGAN, TERRI	No
		DONNELSON, DEAN	No
		DEBOY, PHYLLIS	No
		COTTRELL, L. JOHN	No
		VALINET, STEPHEN L.	No
		JACKSON, BEVERLY J.	No
		EDMONDS, DENNIS	No
		MACFARLAND, DOUGLAS	No
		BASILE, FRANK M.	No
		CANTRELL, DEAN	No
		HOUSTON, KIMBERLY	No
GENE B. GLICK COMPANY, INC. D/B/A GENE GLICK MANAGEMENT CORPORATION 8330 WOODFIELD CROSSING BOULEVARD, SUITE 200 INDIANAPOLIS, IN 46240 Federal Action No.: 073-35408-PM-L8	CARRIAGE HOUSE OF LAFAYETTE ASSOCIATES, L.P. 8330 WOODFIELD CROSSING BOULEVARD SUITE 200 INDIANAPOLIS, IN 46240	MURDOCK, CHARLES	No
		THURSTON, MAX A.	No
		WOLFE, CHRISTINE	No
		BISESI, JAMES T.	No
		RAGAN, TERRI	No
		DONNELSON, DEAN	No
		DEBOY, PHYLLIS	No
		COTTRELL, L. JOHN	No
		VALINET, STEPHEN L.	No
		JACKSON, BEVERLY J.	No
		EDMONDS, DENNIS	No
		MACFARLAND, DOUGLAS	No
		BASILE, FRANK M.	No
		CANTRELL, DEAN	No
		HOUSTON, KIMBERLY	No
GENE B. GLICK COMPANY, INC. D/B/A GENE GLICK MANAGEMENT CORPORATION 8330 WOODFIELD CROSSING BOULEVARD, SUITE 200 INDIANAPOLIS, IN 46240 Federal Action No.: 073-35251-PM-L8	JAMESTOWN APARTMENTS OF VALPARAISO, L.P. 8330 WOODFIELD CROSSING BOULEVARD SUITE 200 INDIANAPOLIS, IN 46240	MURDOCK, CHARLES	No
		THURSTON, MAX A.	No
		WOLFE, CHRISTINE	No
		BISESI, JAMES T.	No
		RAGAN, TERRI	No
		DONNELSON, DEAN	No
		DEBOY, PHYLLIS	No
		COTTRELL, L. JOHN	No
		VALINET, STEPHEN L.	No
		JACKSON, BEVERLY J.	No
		EDMONDS, DENNIS	No
		MACFARLAND, DOUGLAS	No
		BASILE, FRANK M.	No
		CANTRELL, DEAN	No
		HOUSTON, KIMBERLY	No
GENE B. GLICK COMPANY, INC. D/B/A GENE GLICK MANAGEMENT CORPORATION 8330 WOODFIELD CROSSING BOULEVARD, SUITE 200 INDIANAPOLIS, IN 46240 Federal Action No.: 073-35431-PM-L8	CARRIAGE HOUSE OF LAPORTE II, L.P. 8330 WOODFIELD CROSSING BOULEVARD SUITE 200 INDIANAPOLIS, IN 46240	MURDOCK, CHARLES	No
		THURSTON, MAX A.	No
		WOLFE, CHRISTINE	No
		BISESI, JAMES T.	No
		RAGAN, TERRI	No
		DONNELSON, DEAN	No
		DEBOY, PHYLLIS	No
		COTTRELL, L. JOHN	No
		VALINET, STEPHEN L.	No
		JACKSON, BEVERLY J.	No
		EDMONDS, DENNIS	No
		MACFARLAND, DOUGLAS	No
		BASILE, FRANK M.	No
		CANTRELL, DEAN	No
		HOUSTON, KIMBERLY	No
GENE B. GLICK COMPANY, INC. D/B/A GENE GLICK MANAGEMENT CORPORATION 8330 WOODFIELD CROSSING BOULEVARD, SUITE 200 INDIANAPOLIS, IN 46240 Federal Action No.: 073-35240-PM-L8	CARRIAGE HOUSE OF LAPORTE, L.P. 8330 WOODFIELD CROSSING BOULEVARD SUITE 200 INDIANAPOLIS, IN 46240	MURDOCK, CHARLES	No
		THURSTON, MAX A.	No
		WOLFE, CHRISTINE	No
		BISESI, JAMES T.	No
		RAGAN, TERRI	No
		DONNELSON, DEAN	No
		DEBOY, PHYLLIS	No
		COTTRELL, L. JOHN	No

GENE B. GLICK COMPANY, INC. D/B/A (Continued)		VALINET, STEPHEN L.	No
		JACKSON, BEVERLY J.	No
		EDMONDS, DENNIS	No
		MACFARLAND, DOUGLAS	No
		BASILE, FRANK M.	No
		CARTWELL, DEAN	No
		HOUSTON, KIMBERLY	No
GENE B. GLICK COMPANY, INC. D/B/A GENE GLICK MANAGEMENT CORPORATION 8330 WOODFIELD CROSSING BOULEVARD, SUITE 200 INDIANAPOLIS, IN 46240 Federal Action No.: 073-35211-PM	CAMBRIDGE SQUARE OF LAPORTE, L.P. 8330 WOODFIELD CROSSING BOULEVARD SUITE 200 INDIANAPOLIS, IN 46240	MURDOCK, CHARLES	No
		THURSTON, MAX A.	No
		WOLFE, CHRISTINE	No
		BIESEI, JAMES T.	No
		RAGAN, TERRI	No
		DONNELSON, DEAN	No
		DENOY, PHYLLIS	No
		COTTRELL, L. JOHN	No
		VALINET, STEPHEN L.	No
		JACKSON, BEVERLY J.	No
		EDMONDS, DENNIS	No
		MACFARLAND, DOUGLAS	No
		BASILE, FRANK M.	No
		CARTWELL, DEAN	No
		HOUSTON, KIMBERLY	No
GENE B. GLICK COMPANY, INC. D/B/A GENE GLICK MANAGEMENT CORPORATION 8330 WOODFIELD CROSSING BOULEVARD, SUITE 200 INDIANAPOLIS, IN 46240 Federal Action No.: 048-44028-LD	CAMBRIDGE SQUARE OF FLINT ASSOCIATES, L.P. 8330 WOODFIELD CROSSING BOULEVARD SUITE 200 INDIANAPOLIS, IN 46240	MURDOCK, CHARLES	No
		THURSTON, MAX A.	No
		WOLFE, CHRISTINE	No
		BIESEI, JAMES T.	No
		RAGAN, TERRI	No
		DONNELSON, DEAN	No
		COTTRELL, L. JOHN	No
		VALINET, STEPHEN L.	No
		JACKSON, BEVERLY J.	No
		EDMONDS, DENNIS	No
		FIEBER, SHARON	No
		MACFARLAND, DOUGLAS	No
		BASILE, FRANK M.	No
		CARTWELL, DEAN	No
		HOUSTON, KIMBERLY	No
GENE B. GLICK COMPANY, INC. D/B/A GENE GLICK MANAGEMENT CORPORATION 8330 WOODFIELD CROSSING BOULEVARD, SUITE 200 INDIANAPOLIS, IN 46240 Federal Action No.: 073-35249-PM-LS	THE EDSALL HOUSE, L.P. 8330 WOODFIELD CROSSING BOULEVARD SUITE 200 INDIANAPOLIS, IN 46240	THURSTON, MAX A.	No
		WOLFE, CHRISTINE	No
		BIESEI, JAMES T.	No
		RAGAN, TERRI	No
		LEAVITT, NORMA E.	No
		DONNELSON, DEAN	No
		PACKARD, CAROL	No
		LYONS, JAMES	No
		COTTRELL, L. JOHN	No
		VALINET, STEPHEN L.	No
		JACKSON, BEVERLY J.	No
		CROSBY, PAUL	No
		WILSON, DEANA	No
		EDMONDS, DENNIS	No
		BASILE, FRANK M.	No
GENE B. GLICK COMPANY, INC. D/B/A GENE GLICK MANAGEMENT CORPORATION 8330 WOODFIELD CROSSING BOULEVARD, SUITE 200 INDIANAPOLIS, IN 46240 Federal Action No.: 073-35190-PM	BRIARWOOD APARTMENTS II, L.P. 8330 WOODFIELD CROSSING BOULEVARD SUITE 200 INDIANAPOLIS, IN 46240	THURSTON, MAX A.	No
		WOLFE, CHRISTINE	No
		BIESEI, JAMES T.	No
		RAGAN, TERRI	No
		LEAVITT, NORMA E.	No
		DONNELSON, DEAN	No
		LYONS, JAMES	No
		COTTRELL, L. JOHN	No
		VALINET, STEPHEN L.	No
		JACKSON, BEVERLY J.	No
		CROSBY, PAUL	No
		WILSON, DEANA	No
		EDMONDS, DENNIS	No
		BASILE, FRANK M.	No
GENE B. GLICK COMPANY, INC. D/B/A GENE GLICK MANAGEMENT CORPORATION 8330 WOODFIELD CROSSING BOULEVARD, SUITE 200 INDIANAPOLIS, IN 46240 Federal Action No.: 073-35247-PM-LS	CAMBRIDGE SQUARE OF BEECH GROVE, L.P. 8330 WOODFIELD CROSSING BOULEVARD SUITE 200 INDIANAPOLIS, IN 46240	THURSTON, MAX A.	No
		WOLFE, CHRISTINE	No
		BIESEI, JAMES T.	No
		RAGAN, TERRI	No
		LEAVITT, NORMA E.	No
		ORANGE-BENSON, LINDA	No
		DONNELSON, DEAN	No
		LYONS, JAMES	No
		COTTRELL, L. JOHN	No
		VALINET, STEPHEN L.	No
		JACKSON, BEVERLY J.	No
		CROSBY, PAUL	No
		WILSON, DEANA	No
		EDMONDS, DENNIS	No
		BASILE, FRANK M.	No
GENE B. GLICK COMPANY, INC. D/B/A GENE GLICK MANAGEMENT CORPORATION 8330 WOODFIELD CROSSING BOULEVARD, SUITE 200 INDIANAPOLIS, IN 46240 Federal Action No.: 092-44035-LD	CARRIAGE HOUSE ASSOCIATES, L.P. 8330 WOODFIELD CROSSING BOULEVARD SUITE 200 INDIANAPOLIS, IN 46240	MURDOCK, CHARLES	No
		THURSTON, MAX A.	No
		WOLFE, CHRISTINE	No
		BIESEI, JAMES T.	No
		RAGAN, TERRI	No

GENE B. GLICK COMPANY, INC. D/B/A (Continued)		DONNELSON, DEAN	No	
		COTTRELL, L. JOHN	No	
		VALINET, STEPHEN L.	No	
		JACKSON, BEVERLY J.	No	
		EDMONDS, DENNIS	No	
		FISHER, SHARON	No	
		MACFARLAND, DOUGLAS	No	
		BASILE, FRANK M.	No	
		CANTRELL, DEAN	No	
		HOUSTON, KIMBERLY	No	
GENE B. GLICK COMPANY, INC. D/B/A GENE GLICK MANAGEMENT CORPORATION 8330 WOODFIELD CROSSING BOULEVARD, SUITE 200 INDIANAPOLIS, IN 46240 Federal Action No.: 073-35162-PM	BRIARWOOD VILLAGE APARTMENTS, L.P. 8330 WOODFIELD CROSSING BOULEVARD SUITE 200 INDIANAPOLIS, IN 46240	THURSTON, MAX A.	No	
		WOLFE, CHRISTINE	No	
		BISSEL, JAMES T.	No	
		RAGAN, TERRI	No	
		LEAVITT, NORMA E.	No	
		DONNELSON, DEAN	No	
		LYONS, JAMES	No	
		COTTRELL, L. JOHN	No	
		VALINET, STEPHEN L.	No	
		JACKSON, BEVERLY J.	No	
		CROSBY, PAUL	No	
		WILSON, DEANA	No	
		EDMONDS, DENNIS	No	
		BASILE, FRANK M.	No	
BANC ONE CAPITAL CORPORATION 10 WEST BROAD STREET SUITE 400 COLUMBUS, OH 43215 Federal Action No.: FHA OH16-0013-026	JEFFERSON METROPOLITAN HOUSING AUTHORITY ATTENTION: MICHAEL M. MERICK, DIRECTOR 815 N. SIXTH AVENUE STEUBENVILLE, OH 43952	BEISLER, MARK C.	No	
		GOODMAN, DAVID L.	No	
		EWING, CHARLES W., JR.	No	
		CROFT, JAMES F.	No	
		ADAMS, JOHN W.	No	
		GLASSER, TIMOTHY G.	No	
		MACKOV, LINDA L.	No	
		ROBERTS, WILLIAM E.	No	
		BUTLER, SAMUEL J.	No	
		BOLDEN, LISA J.	Yes	DEPARTMENT OF HOUSING AND URBAN DEVELOPMENT DIRECTOR, SECTION 242 HOSPITAL MORTGAGE INSURANCE PROGRAM; JOINED BANC ONE 4/1/93
		CINQUINI, ANTHONY D.	No	
		MCMULLEN, CAROLYN A.	Yes	FEDERAL RESERVE BANK OF CHICAGO 12/90 TO 3/93
		STOCKTON, CHRISTINE A.	No	
		PETERS, TRACY W.	No	
		LIM, Y. PRISCILLA	No	
HOLLAND AND KNIGHT 2100 PENNSYLVANIA AVENUE, NW SUITE 400 WASHINGTON, DC 20037-3202 Federal Action No.: DAY VILLAGE	ROGER GINS 10 EAST 22ND STREET NEW YORK, NY 10010	LEVINE, JERRY	No	
		DUNNELLS, G. RICHARD	No	
		MILES, STEPHEN D.	No	
		PARNET, SUZANNE H.	No	
		FELTER, CAROLYN P.	No	
		NESBITT, LA FONTE	No	
		STERLING, SCOTT A.	No	
HOLLAND AND KNIGHT 2100 PENNSYLVANIA AVENUE, NW SUITE 400 WASHINGTON, DC 20037-3202 Federal Action No.: BURGUNDY PARK	CONTINENTAL WINGATE ASSOCIATES, INC. 4833 RUGBY AVENUE BETHESDA, MD 20814-3072	LEVINE, JERRY	No	
		DUNNELLS, G. RICHARD	No	
		MILES, STEPHEN D.	No	
		PARNET, SUZANNE H.	No	
		FELTER, CAROLYN P.	No	
		NESBITT, LA FONTE	No	
		STERLING, SCOTT A.	No	
THE SCHIFF GROUP, INC. 7514 WISCONSIN AVENUE SUITE 500 BETHESDA, MD 20814 Federal Action No.: FY92/93 COMP GRANT FUNDS	HOUSING AUTHORITY OF THE CITY OF TACOMA 1728 EAST 44TH STREET TACOMA, WA 98404	SCHIFF, JOSEPH G.	Yes	DEPARTMENT OF HOUSING AND URBAN DEVELOPMENT ASSISTANT SECRETARY FOR PUBLIC AND INDIAN HOUSING RESIGNED 1/20/93
BOCC FUNDING CORPORATION 1750 PRESIDENTS STREET SUITE 200 RESTON, VA 22090 Federal Action No.: CAMBRIDGE SQUARE APTS	FIRST INTERSTATE CAPITAL CORPORATION 1303 AVOCADO SUITE 225 NEWPORT BEACH, CA 92660	ARAGE, SUSANA S.	No	
		BEISLER, MARK C.	No	
		GOODMAN, DAVID L.	No	
		ADAMS, JOHN W.	No	
		MACKOV, LINDA L.	No	
		ROBERTS, WILLIAM E.	No	
		STOCKTON, CHRISTINE A.	No	
BOCC FUNDING CORPORATION 1750 PRESIDENTS STREET SUITE 200 RESTON, VA 22090 Federal Action No.: VICTORIAN PARK	VICTORIA PARK ASSOCIATES 3260 NORTH HAYDEN ROAD SUITE 102 SCOTTSDALE, AZ 85251	ARAGE, SUSANA S.	No	
		BEISLER, MARK C.	No	
		GOODMAN, DAVID L.	No	
		ADAMS, JOHN W.	No	
		MACKOV, LINDA L.	No	
		ROBERTS, WILLIAM E.	No	
		STOCKTON, CHRISTINE A.	No	

BOCC FUNDING CORPORATION 1750 PRESIDENTS STREET SUITE 200 RESTON, VA 22090 Federal Action No.: MICHIGAN BEACH APARTMENTS	MICHIGAN BEACH, L.P. 10 SOUTH LASALLE STREET SUITE 3440 CHICAGO, IL 60602	ARAOZ, SUSANA S.	No	
		BEISLER, MARK C.	No	
		GOODMAN, DAVID L.	No	
		ADAMS, JOHN W.	No	
		MACKOY, LINDA L.	No	
		ROBERTS, WILLIAM E.	No	
		STOCKTON, CHRISTINE A.	No	
BOCC FUNDING CORPORATION 1750 PRESIDENTS STREET SUITE 200 RESTON, VA 22090 Federal Action No.: METRO TERRANCE APARTMENTS	M.T. APARTMENTS, L.P. 520 N. ORANGEWOOD PHOENIX, AZ 85021	ARAOZ, SUSANA S.	No	
		BEISLER, MARK C.	No	
		GOODMAN, DAVID L.	No	
		ADAMS, JOHN W.	No	
		MACKOY, LINDA L.	No	
		ROBERTS, WILLIAM E.	No	
		STOCKTON, CHRISTINE A.	No	
BOCC FUNDING CORPORATION 1750 PRESIDENTS STREET SUITE 200 RESTON, VA 22090 Federal Action No.: WILLOWBEND APARTMENTS	WILLOWBEND APARTMENTS 1035 ASTER AVENUE SUNNYVALE, CA 94086	ARAOZ, SUSANA S.	No	
		BEISLER, MARK C.	No	
		GOODMAN, DAVID L.	No	
		ADAMS, JOHN W.	No	
		MACKOY, LINDA L.	No	
		ROBERTS, WILLIAM E.	No	
		STOCKTON, CHRISTINE A.	No	
BOCC FUNDING CORPORATION 1750 PRESIDENTS STREET SUITE 200 RESTON, VA 22090 Federal Action No.: CHRISTIAN CARE NRSNG CNTR	CHRISTIAN CARE, INC. 2002 WEST SUNNYSIDE DRIVE PHOENIX, AZ 85071-3210	ARAOZ, SUSANA S.	No	
		BEISLER, MARK C.	No	
		GOODMAN, DAVID L.	No	
		ADAMS, JOHN W.	No	
		MACKOY, LINDA L.	No	
		ROBERTS, WILLIAM E.	No	
		STOCKTON, CHRISTINE A.	No	
BANC ONE CAPITAL CORPORATION 10 WEST BROAD STREET SUITE 400 COLUMBUS, OH 43215 Federal Action No.: FHA 103-35115-PM	OVERLAND BANK CHERRY TREE VILLAS, LTD. 304 WEST THIRD GRAND ISLAND, NE 68802	BEISLER, MARK C.	No	
		GOODMAN, DAVID L.	No	
		EWING, CHARLES W., JR.	No	
		CROFT, JAMES F.	No	
		ADAMS, JOHN W.	No	
		GLASSER, TIMOTHY G.	No	
		MACKOY, LINDA L.	No	
		ROBERTS, WILLIAM E.	No	
		BUTLER, SAMUEL J.	No	
		BOLDEN, LISA J.	Yes	DEPARTMENT OF HOUSING AND URBAN DEVELOPMENT DIRECTOR, SECTION 242 HOSPITAL MORTGAGE INSURANCE PROGRAM; JOINED BANC ONE ON 04/01/93
		CINQUINI, ANTHONY D.	No	
		MCMULLEN, CAROLYN A.	Yes	FEDERAL RESERVE BANK OF CHICAGO 12/90 TO 03/93
		STOCKTON, CHRISTINE A.	No	
		PETERS, TRACY W.	No	
		LIM, Y. PRISCILLA	No	
		KING, JAMES A.	No	
		BLUMM, ELIZABETH B.	No	
		KALLMEYER, R. BARTH	No	
		LEIBOLD, BRADLEY L.	No	
		YOUNG, SANDRA E.	No	
BROWNSTEIN ZEIDMAN AND LORE 1401 NEW YORK AVENUE, NW SUITE 900 WASHINGTON, DC 20005 Federal Action No.: 000-94003	THE SHELTER GROUP HILLTOP GARDENS 216 NORTH CHARLES STREET, SUITE 500 BALTIMORE, MD 21201	LORE, KENNETH G.	No	
		LEVY, HAROLD A.	No	
KROOTH & ALTMAN 1850 M STREET, NW SUITE 400 WASHINGTON, DC 20036-5803 Federal Action No.: FHA 031-13016	PAINEWEBBER INCORPORATED 1285 AVENUE OF THE AMERICAS NEW YORK, NY 10019	MAKER, MICHAEL E.	No	
		FERRA, JAMES F.	No	
		LIBERETTA, DONALD F.	No	
		SMITH, HARRISON C.	No	
		BELDON, ROBERT C.	No	
		OPERE, JON I.	No	
		ALIMAN, VICTOR A.	No	
		BARSKY, DAVID A.	No	
		GEORGE, MARY JO	No	
		KLIJENSKI, JOSEPH A.	No	
		TENHANT, WILLIAM S.	No	
		CLANCY, PATRICK J.	No	
		VIERPAOT, JOHN E.	No	
		GRESSER, MARIO B.	No	
		GROSNER, FELICIA M.	No	
		KNOLL, E. JOSEPH	No	
		ALTMAN, NORMAN S.	No	
		DELANEY, WILLIAM J.	No	
		COLE, D. RANDOLPH, JR.	No	
BOCC FUNDING CORPORATION 1750 PRESIDENTS STREET SUITE 200 RESTON, VA 22090 Federal Action No.: SEVERN ROADS	MERICARE ASSOCIATES 337 BRIGHTSEAT ROAD SUITE 100 LANDOVER, MD 20785	ARAOZ, SUSANA S.	No	
		BEISLER, MARK C.	No	
		GOODMAN, DAVID L.	No	
		ADAMS, JOHN W.	No	
		MACKOY, LINDA L.	No	

BOCC FUNDING CORPORATION (Continued)		ROBERTS, WILLIAM E.	No	
		STOCKTON, CHRISTINE A.	No	
BOCC FUNDING CORPORATION 1750 PRESIDENTS STREET SUITE 200 RESTON, VA 22090 Federal Action No.: UNIVERSITY GARDENS	UNIVERSITY GARDENS PARTNERSHIP ATTENTION: EUGENE M. LITMAN 980 LINCOLN HIGHWAY NORTH VERSAILLES, PA 15137	ARAOZ, SUSANA S.	No	
		BEISLER, MARK C.	No	
		GOODMAN, DAVID L.	No	
		ADAMS, JOHN W.	No	
		MACKOV, LINDA L.	No	
		ROBERTS, WILLIAM E.	No	
		STOCKTON, CHRISTINE A.	No	
BOCC FUNDING CORPORATION 1750 PRESIDENTS STREET SUITE 200 RESTON, VA 22090 Federal Action No.: CASA FARNESE	CASA ENRICO FERMI ATTENTION: ANDREW FARNESE 1800 LOMBARD STREET PHILADELPHIA, PA 19147	ARAOZ, SUSANA S.	No	
		BEISLER, MARK C.	No	
		GOODMAN, DAVID L.	No	
		ADAMS, JOHN W.	No	
		MACKOV, LINDA L.	No	
		ROBERTS, WILLIAM E.	No	
		STOCKTON, CHRISTINE A.	No	
TECHNICAL ASSISTANCE CORPORATION FOR HOUSING 205 W. MONROE STREET SUITE 5 WEST CHICAGO, IL 60606 Federal Action No.: 071-44134	NEIGHBORHOOD COMMONS ASSOCIATION, INC. NEIGHBORHOOD COMMONS APARTMENTS NORTH VINE STREET AND WEST NORTH AVENUE CHICAGO, IL 60656	BONNER, FRED L.	No	
		BROWN, RALPH I.	No	
BANC ONE CAPITAL CORPORATION 10 WEST BROAD STREET SUITE 400 COLUMBUS, OH 43215 Federal Action No.: FHA 053-35371	VIRGINIA DARE ASSOCIATES ONE MANAGEMENT, INC. 6131 FALLS OF NEUS ROAD, SUITE 200 RELEIGH, NC 27609	BEISLER, MARK C.	No	
		GOODMAN, DAVID L.	No	
		EWING, CHARLES W., JR.	No	
		CROFT, JAMES F.	No	
		ADAMS, JOHN W.	No	
		GLASSER, TIMOTHY G.	No	
		MACKOV, LINDA L.	No	
		ROBERTS, WILLIAM E.	No	
		BUTLER, SAMUEL J.	No	
		BOLDEN, LISA J.	Yes	U.S. DEPARTMENT OF HOUSING AND URBAN DEVELOPMENT DIRECTOR, SECTION 242 HOSPITAL MORTGAGE INSURANCE PROGRAM (THREE YEARS) JOINED BANC ONE ON 4/1/93
		CINQUINI, ANTHONY D.	No	
		MCMULLEN, CAROLYN A.	Yes	FEDERAL RESERVE BANK OF CHICAGO 12/90 - 3/93 ECONOMIC FORECASTING
		STOCKTON, CHRISTINE A.	No	
		PETERS, TRACY W.	No	
		LIM, Y. PRISCILLA	No	
		KING, JAMES A.	No	
		BLUMM, ELIZABETH B.	No	
		KALLMERTEN, R. BARTH	No	
		LEIBOLD, BRADLEY L.	No	
		YOUNG, SANDRA E.	No	
		MARTIN, DAVID C.	No	
BANC ONE CAPITAL CORPORATION 10 WEST BROAD STREET SUITE 400 COLUMBUS, OH 43215 Federal Action No.: FHA 033-35148-PM-WAH-L8	EDINLAKE ASSOCIATES ATTENTION: RAYMOND J. CZACHOWSKI 4415 FIFTH AVENUE PITTSBURGH, PA 15213	BEISLER, MARK C.	No	
		GOODMAN, DAVID L.	No	
		EWING, CHARLES W., JR.	No	
		CROFT, JAMES F.	No	
		ADAMS, JOHN W.	No	
		GLASSER, TIMOTHY G.	No	
		MACKOV, LINDA L.	No	
		ROBERTS, WILLIAM E.	No	
		BUTLER, SAMUEL J.	No	
		BOLDEN, LISA J.	Yes	U.S. DEPARTMENT OF HOUSING AND URBAN DEVELOPMENT DIRECTOR, SECTION 242 HOSPITAL MORTGAGE INSURANCE PROGRAM (THREE YEARS) JOINED BANC ONE 4/1/93
		CINQUINI, ANTHONY D.	No	
		MCMULLEN, CAROLYN A.	Yes	FEDERAL RESERVE BANK OF CHICAGO 12/90 - 3/93 ECONOMIC FORECASTING
		STOCKTON, CHRISTINE A.	No	
		PETERS, TRACY W.	No	
		LIM, Y. PRISCILLA	No	
		KING, JAMES A.	No	
		BLUMM, ELIZABETH B.	No	
		KALLMERTEN, R. BARTH	No	
		LEIBOLD, BRADLEY L.	No	
		YOUNG, SANDRA E.	No	
		MARTIN, DAVID C.	No	

BROWNSTEIN ZEIDMAN AND LORE 1401 NEW YORK AVENUE, NW SUITE 900 WASHINGTON, DC 20005 Federal Action No.: 01Z-35634	QUEENS WEST APARTMENTS M.O. ASSOCIATES 200 PARK AVENUE NEW YORK, NY 10166	LORE, KENNETH G. LEVY, HAROLD A.	No No
DUANE MORRIS HECKSCHER ONE LIBERTY PLACE PHILADELPHIA, PA 19103-7396 Federal Action No.: SECTION 8 FINANCING	PENNROSE PROPERTIES, INC. ONE LIBERTY PLACE SUITE 3810 PHILADELPHIA, PA 19103-7332	ADAMS, BARBARA	No
FOLEY AND LARDNER 1 SOUTH PINCKNEY STREET, SUITE 701 P.O. BOX 1497 MADISON, WI 53701-1497 Federal Action No.: 075-44045-LDP	ASSISI HOMES - ROCK VIEW, INC. 5016 WEST BURLEIGH STREET MILWAUKEE, WI 53210	LAWRENCE, WAYMAN C. RADELET, TIMOTHY J. CROPSEY, DOUGLAS J.	No No No
FOLEY AND LARDNER 1 SOUTH PINCKNEY STREET, SUITE 701 P.O. BOX 1497 MADISON, WI 53701-1497 Federal Action No.: 075-HD009-WPD	MADISON AIDS SUPPORT NETWORK, INC. THE RODNEY SCHEEL HOUSE FOUNDATION, LTD. 303 LATHROP STREET MADISON, WI 53705	RADELET, TIMOTHY J. CROPSEY, DOUGLAS J.	No No
FRANCISCAN MINISTRIES, INC. 26 WEST 171 ROOSEVELT ROAD P.O. BOX 667 WHEATON, IL 60189 Federal Action No.: 075-44045-LDPM8	ASSISI HOMES ROCK VIEW, INC. 121/207 EAST HENRY, 935 S. GAFKE JEFFERSON, WI 53549	CISEK, ROBERT SCHULTZ, PHILLIP JASENSKI, PAUL	No No No
GLUECK ARCHITECTS 116 NORTH FEW STREET MADISON, WI 53703 Federal Action No.: 075-HD009-WPD	MADISON AIDS SUPPORT NETWORK, INC. THE RODNEY SCHEEL HOUSE FOUNDATION, LTD. 303 LATHROP STREET MADISON, WI 53705	GLUECK, JAMES	No
HENNIG AND ASSOCIATES 309 W. WASHINGTON AVENUE, SUITE 345 P.O. BOX 2535 MADISON, WI 53701-2535 Federal Action No.: 075-HD009-WPD	MADISON AIDS SUPPORT NETWORK, INC. THE RODNEY SCHEEL HOUSE FOUNDATION, LTD. 303 LATHROP STREET MADISON, WI 53705	ROSNER, ELLEN	No
KROOTH & ALTMAN 1850 M STREET, NW SUITE 400 WASHINGTON, DC 20036-5803 Federal Action No.: FHA 123-35207	REILLY MORTGAGE GROUP, INC. 2000 CORPORATE RIDGE SUITE 925 MCLEAN, VA 22102	MAEER, MICHAEL E. PENNA, JAMES F. LIBERETTA, DONALD F. SMITH, HARRISON C. SELDON, ROBERT C. OFFEY, JOE I. ALTMAN, VICTOR A. BARNEY, DAVID A. GEORGE, MARY JO KLIMKSKI, JOSEPH A. TENNANT, WILLIAM S. CLANCY, PATRICK J. VIERFAST, JOHN E. GRESSES, MARIO B. GROSER, FELICIA M. KNOLL, E. JOSEPH ALTMAN, NORMAN S. DELANEY, WILLIAM J. COLE, D. RANDOLPH, JR.	No No No No No No No No No No No No No No No No No No No
LANDMAN AND BEATTY 1150 MARKET SQUARE CENTER 151 N. DELAWARE STREET INDIANAPOLIS, IN 46204-2518 Federal Action No.: 066-44094-LDP	GENE B. GLICK COMPANY, INC. D/B/A GENE GLICK MANAGEMENT CORPORATION 8330 WOODFIELD CROSSING BOULEVARD, SUITE 200 INDIANAPOLIS, IN 46240	BEATTY, JAMES W. BEATTY, J. F. MCCARTY, VIRGINIA DILL GULLICK, ROBERT H.	No No No No
LANDMAN AND BEATTY 1150 MARKET SQUARE CENTER 151 N. DELAWARE STREET INDIANAPOLIS, IN 46204-2518 Federal Action No.: 073-44235-LDP	GENE B. GLICK COMPANY, INC. D/B/A GENE GLICK MANAGEMENT CORPORATION 8330 WOODFIELD CROSSING BOULEVARD, SUITE 200 INDIANAPOLIS, IN 46240	BEATTY, JAMES W. BEATTY, J. F. MCCARTY, VIRGINIA DILL GULLICK, ROBERT H.	No No No No
LANDMAN AND BEATTY 1150 MARKET SQUARE CENTER 151 N. DELAWARE STREET INDIANAPOLIS, IN 46204-2518 Federal Action No.: 073-44008-LDP	GENE B. GLICK COMPANY, INC. D/B/A GENE GLICK MANAGEMENT CORPORATION 8330 WOODFIELD CROSSING BOULEVARD, SUITE 200 INDIANAPOLIS, IN 46240	BEATTY, JAMES W. BEATTY, J. F. MCCARTY, VIRGINIA DILL GULLICK, ROBERT H.	No No No No
LANDMAN AND BEATTY 1150 MARKET SQUARE CENTER 151 N. DELAWARE STREET INDIANAPOLIS, IN 46204-2518 Federal Action No.: 083-44056	GENE B. GLICK COMPANY, INC. D/B/A GENE GLICK MANAGEMENT CORPORATION 8330 WOODFIELD CROSSING BOULEVARD, SUITE 200 INDIANAPOLIS, IN 46240	BEATTY, JAMES W. BEATTY, J. F. MCCARTY, VIRGINIA DILL GULLICK, ROBERT H.	No No No No
LANDMAN AND BEATTY 1150 MARKET SQUARE CENTER 151 N. DELAWARE STREET INDIANAPOLIS, IN 46204-2518 Federal Action No.: 043-44055-LDP/SUP	GENE B. GLICK COMPANY, INC. D/B/A GENE GLICK MANAGEMENT CORPORATION 8330 WOODFIELD CROSSING BOULEVARD, SUITE 200 INDIANAPOLIS, IN 46240	BEATTY, JAMES W. BEATTY, J. F. MCCARTY, VIRGINIA DILL GULLICK, ROBERT H.	No No No No

LANDMAN AND BEATTY 1150 MARKET SQUARE CENTER 151 N. DELAWARE STREET INDIANAPOLIS, IN 46204-2518 Federal Action No.: 092-44035-LD	GENE B. GLICK COMPANY, INC. D/B/A GENE GLICK MANAGEMENT CORPORATION 6330 WOODFIELD CROSSING BOULEVARD, SUITE 200 INDIANAPOLIS, IN 46240	BEATTY, JAMES W. BEATTY, J. F. MCCARTY, VIRGINIA DILL GOLLICK, ROBERT H.	No No No No
LATHAM AND WATKINS 1001 PENNSYLVANIA AVENUE, NW SUITE 1300 SOUTH WASHINGTON, DC 20004-2505 Federal Action No.: 143-94001	RETIREMENT HOUSING FOUNDATION 5150 EAST PACIFIC COAST HIGHWAY SUITE 600 LONG BEACH, CA 90804	KELLY, WILLIAM C., JR.	No
MADISON AIDS SUPPORT NETWORK, INC. 303 LATHROP STREET MADISON, WI 53705 Federal Action No.: 075-HD009-WPD	MADISON AIDS SUPPORT NETWORK, INC. THE RODNEY SCHEEL HOUSE FOUNDATION, LTD. 303 LATHROP STREET MADISON, WI 53705	MOWRY, MARY ALICE	No
POWELL GOLDSTEIN FRAZER & MURPHY 1001 PENNSYLVANIA AVENUE, NW SUITE 600 WASHINGTON, DC 20004 Federal Action No.: MA06-K052-013	PHOENIX HOUSE FOUNDATION 164 WEST 74TH STREET NEW YORK, NY 10023	ROSTOW, VICTORIA P.	No
POWELL GOLDSTEIN FRAZER & MURPHY 1001 PENNSYLVANIA AVENUE, NW SUITE 600 WASHINGTON, DC 20004 Federal Action No.: MA06-K052-015	PHOENIX HOUSE FOUNDATION 164 WEST 74TH STREET NEW YORK, NY 10023	ROSTOW, VICTORIA P.	No
THE RODNEY SCHEEL HOUSE FOUNDATION, LTD. 303 LATHROP STREET MADISON, WI 53705 Federal Action No.: 075-HD009-WPD	MADISON AIDS SUPPORT NETWORK, INC. THE RODNEY SCHEEL HOUSE FOUNDATION, LTD. 303 LATHROP STREET MADISON, WI 53705	MOWRY, MARY ALICE	No
WEINER BRODSKY SIDMAN & KIDER, P.C. 1350 NEW YORK AVENUE, NW SUITE 800 WASHINGTON, DC 20005 Federal Action No.: 3580	GE CAPITAL ASSET MANAGEMENT CORPORATION 2001 N. BEAUREGARD STREET SUITE 1200 ALEXANDRIA, VA 22311	GOLD, LAURENCE H. SHEARER, ANN B. BRODSKY, JAMES A. WEINER, HARVEY E. ANDREANO, RICHARD J., JR. KIDER, MITCHEL H. MELNICK, RICHARD J. NOEL, LISA M. HALPERN, DON J. LEDNER, SHERRI L. JONES, THOMAS P.	No No No No No No No No No No No
WEINER BRODSKY SIDMAN & KIDER, P.C. 1350 NEW YORK AVENUE, NW SUITE 800 WASHINGTON, DC 20005 Federal Action No.: 77706	FLEET MORTGAGE GROUP, INC. 1333 MAIN STREET COLUMBIA, SC 29211	GOLD, LAURENCE H. SHEARER, ANN B. BRODSKY, JAMES A. WEINER, HARVEY E. ANDREANO, RICHARD J., JR. KIDER, MITCHEL H. MELNICK, RICHARD J. NOEL, LISA M. HALPERN, DON J. LEDNER, SHERRI L. JONES, THOMAS P.	No No No No No No No No No No No
WEINER BRODSKY SIDMAN & KIDER, P.C. 1350 NEW YORK AVENUE, NW SUITE 800 WASHINGTON, DC 20005 Federal Action No.: 3650	BANK OF AMERICA 555 CALIFORNIA STREET SAN FRANCISCO, CA 94104	GOLD, LAURENCE H. SHEARER, ANN B. BRODSKY, JAMES A. WEINER, HARVEY E. ANDREANO, RICHARD J., JR. KIDER, MITCHEL H. MELNICK, RICHARD J. NOEL, LISA M. HALPERN, DON J. LEDNER, SHERRI L. JONES, THOMAS P.	No No No No No No No No No No No
WEINER BRODSKY SIDMAN & KIDER, P.C. 1350 NEW YORK AVENUE, NW SUITE 800 WASHINGTON, DC 20005 Federal Action No.: 1422	BANK OF AMERICA 555 CALIFORNIA STREET SAN FRANCISCO, CA 94104	GOLD, LAURENCE H. SHEARER, ANN B. BRODSKY, JAMES A. WEINER, HARVEY E. ANDREANO, RICHARD J., JR. KIDER, MITCHEL H. MELNICK, RICHARD J. NOEL, LISA M. HALPERN, DON J. LEDNER, SHERRI L. JONES, THOMAS P.	No No No No No No No No No No No
WEINER BRODSKY SIDMAN & KIDER, P.C. 1350 NEW YORK AVENUE, NW SUITE 800 WASHINGTON, DC 20005 Federal Action No.: 70406	NATIONAL LOAN SERVICENTER, INC. 11900 BOURNEFIELD WAY SILVER SPRING, MD 20904	GOLD, LAURENCE H. SHEARER, ANN B. WEINER, HARVEY E. ANDREANO, RICHARD J., JR. KIDER, MITCHEL H. MELNICK, RICHARD J. NOEL, LISA M. HALPERN, DON J. LEDNER, SHERRI L. JONES, THOMAS P.	No No No No No No No No No No

WEINER BRODSKY SIDMAN & KIDER, P.C. 1350 NEW YORK AVENUE, NW SUITE 800 WASHINGTON, DC 20005 Federal Action No.: 77763	SPECTRUM FUNDING CORPORATION 11900 BOURNEFIELD WAY SILVER SPRING, MD 20904	GOLD, LAURENCE H. SHEARER, ANN B. WEINER, HARVEY E. ANDREANO, RICHARD J., JR. KIDER, MITCHEL H. MELNICK, RICHARD J. NOEL, LISA M. HALPERN, DON J. LEDNER, SHERRI L. JONES, THOMAS P.	No No No No No No No No No No
WEINER BRODSKY SIDMAN & KIDER, P.C. 1350 NEW YORK AVENUE, NW SUITE 800 WASHINGTON, DC 20005 Federal Action No.: 1422	BANK OF AMERICA 555 CALIFORNIA STREET SAN FRANCISCO, CA 94104	GOLD, LAURENCE H. SHEARER, ANN B. BRODSKY, JAMES A. WEINER, HARVEY E. ANDREANO, RICHARD J., JR. KIDER, MITCHEL H. MELNICK, RICHARD J. NOEL, LISA M. HALPERN, DON J. LEDNER, SHERRI L. JONES, THOMAS P.	No No No No No No No No No No No
BOCC FUNDING CORPORATION 1750 PRESIDENTS STREET SUITE 200 RESTON, VA 22090 Federal Action No.: MORTGAGE INSURANCE	WELLINGTON RETIREMENT COMMUNITY CORPORATION 147 HERRICK AVENUE, EAST WELLINGTON, OH 44090	ARAOZ, SUSANA S. REISLER, MARK C. GOODMAN, DAVID L. ADAMS, JOHN W. MACKOY, LINDA L. ROBERTS, WILLIAM E. STOCKTON, CHRISTINE A.	No No No No No No No
BOCC FUNDING CORPORATION 1750 PRESIDENTS STREET SUITE 200 RESTON, VA 22090 Federal Action No.: WILLOWWOOD NURSING HOME	SORAKA TELLE AND ASSOCIATES, INC. ATTENTION: EDWARD E. TELLE 5025 ARLINGTON CENTRE BOULEVARD, SUITE 520 COLUMBUS, OH 43220	ARAOZ, SUSANA S. REISLER, MARK C. GOODMAN, DAVID L. ADAMS, JOHN W. MACKOY, LINDA L. ROBERTS, WILLIAM E. STOCKTON, CHRISTINE A.	No No No No No No No
BOCC FUNDING CORPORATION 1750 PRESIDENTS STREET SUITE 200 RESTON, VA 22090 Federal Action No.: PHASE I	NOBLE MANOR APARTMENTS MARK III MANAGEMENT CORPORATION 7321 SHADELAND STATION, SUITE 220 INDIANAPOLIS, IN 46256	ARAOZ, SUSANA S. REISLER, MARK C. GOODMAN, DAVID L. ADAMS, JOHN W. MACKOY, LINDA L. ROBERTS, WILLIAM E. STOCKTON, CHRISTINE A.	No No No No No No No
DFC GROUP, INC. ATTENTION: ROBERT S. SALOMON, III 7201 WISCONSIN AVENUE, SUITE 620 BETHESDA, MD 20814 Federal Action No.: VA39-P019-051	KUTAK ROCK 1101 CONNECTICUT AVENUE, NW SUITE 600 WASHINGTON, DC 20036	SALOMON, ROBERT S., III	No
DFC GROUP, INC. ATTENTION: ROBERT S. SALOMON, III 7201 WISCONSIN AVENUE, SUITE 620 BETHESDA, MD 20814 Federal Action No.: PROVIDENCE SQUARE	PENNROSE PROPERTIES, INC. ONE LIBERTY PLACE SUITE 3810 PHILADELPHIA, PA 19103-7332	SALOMON, ROBERT S., III	No
DFC GROUP, INC. ATTENTION: ROBERT S. SALOMON, III 7201 WISCONSIN AVENUE, SUITE 620 BETHESDA, MD 20814 Federal Action No.: 085-55009	HOUSING AUTHORITY OF ST. LOUIS COUNTY 8865 NATURAL BRIDGE ROAD ST. LOUIS, MO 63121	SALOMON, ROBERT S., III	No
DFC GROUP, INC. ATTENTION: ROBERT S. SALOMON, III 7201 WISCONSIN AVENUE, SUITE 620 BETHESDA, MD 20814 Federal Action No.: 085-55004	HOUSING AUTHORITY OF ST. LOUIS COUNTY 8865 NATURAL BRIDGE ROAD ST. LOUIS, MO 63121	SALOMON, ROBERT S., III	No
HOLLAND AND KNIGHT 2100 PENNSYLVANIA AVENUE, NW SUITE 400 WASHINGTON, DC 20037-3202 Federal Action No.: 067-94011	RETIREMENT CORPORATION OF AMERICA 1000 ABERNATHY ROAD, NE BUILDING 400, SUITE 800 ATLANTA, GA 30328-5603	LEVINE, JERRY DUNNELLS, G. RICHARD NILES, STEPHEN D. PARMET, SUZANNE H. FELTER, CAROLYN P. NESBITT, LA FONTE STERLING, SCOTT A.	No No No No No No No
HOLLAND AND KNIGHT 2100 PENNSYLVANIA AVENUE, NW SUITE 400 WASHINGTON, DC 20037-3202 Federal Action No.: FHA 042-94002	INSIGNIA FINANCIAL GROUP 1 INSIGNIA FINANCIAL PLAZA GREENVILLE, SC 29602	LEVINE, JERRY DUNNELLS, G. RICHARD NILES, STEPHEN D. PARMET, SUZANNE H. FELTER, CAROLYN P. NESBITT, LA FONTE STERLING, SCOTT A.	No No No No No No No
HOLLAND AND KNIGHT 2100 PENNSYLVANIA AVENUE, NW SUITE 400 WASHINGTON, DC 20037-3202 Federal Action No.: FHA 054-35407	DARBY DEVELOPMENT COMPANY 4142 DORCHESTER ROAD CHARLESTON, SC 29405	LEVINE, JERRY DUNNELLS, G. RICHARD NILES, STEPHEN D. PARMET, SUZANNE H. FELTER, CAROLYN P.	No No No No No

HOLLAND AND KNIGHT (Continued)		MERRITT, LA FONTE	No
		STERLING, SCOTT A.	No
HOLLAND AND KNIGHT 2100 PENNSYLVANIA AVENUE, NW SUITE 400 WASHINGTON, DC 20037-3202 Federal Action No.: IPO	NATIONAL CORPORATION FOR HOUSING PARTNERSHIPS 1225 EYE STREET, NW WASHINGTON, DC 20005	LEVINE, JERRY	No
		DUNNELLS, G. RICHARD	No
		MILES, STEPHEN D.	No
		PARMET, SUZANNE H.	No
		FELTER, CAROLYN P.	No
		MERRITT, LA FONTE	No
		STERLING, SCOTT A.	No
HOLLAND AND KNIGHT 2100 PENNSYLVANIA AVENUE, NW SUITE 400 WASHINGTON, DC 20037-3202 Federal Action No.: FHA 083-94007	AMERICAN DIVERSIFIED DEVELOPMENT 2121 SOUTH GREEN ROAD S. EUCLID, OH 44121	LEVINE, JERRY	No
		DUNNELLS, G. RICHARD	No
		MILES, STEPHEN D.	No
		PARMET, SUZANNE H.	No
		FELTER, CAROLYN P.	No
		MERRITT, LA FONTE	No
		STERLING, SCOTT A.	No
HOLLAND AND KNIGHT 2100 PENNSYLVANIA AVENUE, NW SUITE 400 WASHINGTON, DC 20037-3202 Federal Action No.: FHA 000-94079	GRG IMPERIAL I LIMITED PARTNERSHIP 4833 RUGBY AVENUE BETHESDA, MD 20814	LEVINE, JERRY	No
		DUNNELLS, G. RICHARD	No
		MILES, STEPHEN D.	No
		PARMET, SUZANNE H.	No
		FELTER, CAROLYN P.	No
		MERRITT, LA FONTE	No
		STERLING, SCOTT A.	No
HOLLAND AND KNIGHT 2100 PENNSYLVANIA AVENUE, NW SUITE 400 WASHINGTON, DC 20037-3202 Federal Action No.: MM36-H017-357	WISHCAMPER PROPERTIES, INC. 177 HIGH STREET PORTLAND, ME 04101	LEVINE, JERRY	No
		DUNNELLS, G. RICHARD	No
		MILES, STEPHEN D.	No
		PARMET, SUZANNE H.	No
		FELTER, CAROLYN P.	No
		MERRITT, LA FONTE	No
		STERLING, SCOTT A.	No
HOLLAND AND KNIGHT 2100 PENNSYLVANIA AVENUE, NW SUITE 400 WASHINGTON, DC 20037-3202 Federal Action No.: FHA 017-35048	ELK INVESTORS 641 LEXINGTON AVENUE NEW YORK, NY 10022	LEVINE, JERRY	No
		DUNNELLS, G. RICHARD	No
		MILES, STEPHEN D.	No
		PARMET, SUZANNE H.	No
		FELTER, CAROLYN P.	No
		MERRITT, LA FONTE	No
		STERLING, SCOTT A.	No
GENE B. GLICK COMPANY, INC. D/B/A GENE GLICK MANAGEMENT CORPORATION 8330 WOODFIELD CROSSING BOULEVARD, SUITE 200 INDIANAPOLIS, IN 46240 Federal Action No.: 066-44094-LDP	CAMBRIDGE SQUARE OF HIALEAH ASSOCIATES, L.P. 8330 WOODFIELD CROSSING BOULEVARD SUITE 200 INDIANAPOLIS, IN 46240	KELLEY, JON	No
		MIERNER, JULIE	No
		THURSTON, MAX A.	No
		WOLFE, CHRISTINE	No
		BIERSI, JAMES T.	No
		RAGAN, TERRI	No
		MACFARLAND, BELENDA	No
		DOWNELSON, DEAN	No
		COTTRELL, L. JOHN	No
		VALINET, STEPHEN L.	No
		JACKSON, BEVERLY J.	No
		BRINKER, MICHELLE	No
		EDMONDS, DENNIS	No
		BASILE, FRANK M.	No
		JONES, STEPHANIE	No
GENE B. GLICK COMPANY, INC. D/B/A GENE GLICK MANAGEMENT CORPORATION 8330 WOODFIELD CROSSING BOULEVARD, SUITE 200 INDIANAPOLIS, IN 46240 Federal Action No.: 092-44035-LD	CARRIAGE HOUSE ASSOCIATES, L.P. 8330 WOODFIELD CROSSING BOULEVARD SUITE 200 INDIANAPOLIS, IN 46240	MURDOCK, CHARLES	No
		THURSTON, MAX A.	No
		WOLFE, CHRISTINE	No
		BIERSI, JAMES T.	No
		RAGAN, TERRI	No
		DOWNELSON, DEAN	No
		COTTRELL, L. JOHN	No
		VALINET, STEPHEN L.	No
		JACKSON, BEVERLY J.	No
		EDMONDS, DENNIS	No
		KIBBER, SHARON	No
		MACFARLAND, DOUGLAS	No
		BASILE, FRANK M.	No
		CAMPBELL, DEAN	No
		HOUSTON, KIMBERLY	No
GENE B. GLICK COMPANY, INC. D/B/A GENE GLICK MANAGEMENT CORPORATION 8330 WOODFIELD CROSSING BOULEVARD, SUITE 200 INDIANAPOLIS, IN 46240 Federal Action No.: 043-44055-LDP/SUP	COLUMBUS HOUSING ASSOCIATES, L.P. 8330 WOODFIELD CROSSING BOULEVARD SUITE 200 INDIANAPOLIS, IN 46240	MURDOCK, CHARLES	No
		THURSTON, MAX A.	No
		WOLFE, CHRISTINE	No
		BIERSI, JAMES T.	No
		RAGAN, TERRI	No
		DOWNELSON, DEAN	No
		COTTRELL, L. JOHN	No
		VALINET, STEPHEN L.	No
		JACKSON, BEVERLY J.	No
		EDMONDS, DENNIS	No
		MACFARLAND, DOUGLAS	No
		BASILE, FRANK M.	No
		KNAPP, SHARON	No
		SIMMS, DIANNE	No
		CAMPBELL, DEAN	No
		HOUSTON, KIMBERLY	No

03/28/1995 Form HUD-2881-B For Calendar Year 1994 Page 33

GENE B. GLICK COMPANY, INC. D/B/A GENE GLICK MANAGEMENT CORPORATION 8330 WOODFIELD CROSSING BOULEVARD, SUITE 200 INDIANAPOLIS, IN 46240 Federal Action No.: 083-44056	FLORENCE HOUSING ASSOCIATES, L.P. 8330 WOODFIELD CROSSING BOULEVARD SUITE 200 INDIANAPOLIS, IN 46240	MURDOCK, CHARLES THURSTON, MAX A. WOLFE, CHRISTINE BISESI, JAMES T. RAGAN, TERRI DONNELSON, DEAN COTTRELL, L. JOHN VALLINEY, STEPHEN L. JACKSON, BEVERLY J. EDMONDS, DENNIS MACFARLAND, DOUGLAS BASILE, FRANK M. KNAPP, SHARON SIMMS, DIANNE CAMPBELL, DEAN HOUSTON, KIMBERLY	No No No No No No No No No No No No No No No No
GENE B. GLICK COMPANY, INC. D/B/A GENE GLICK MANAGEMENT CORPORATION 8330 WOODFIELD CROSSING BOULEVARD, SUITE 200 INDIANAPOLIS, IN 46240 Federal Action No.: 073-44008-LDP	CARRIAGE HOUSE OF MISHAWAKA ASSOCIATES I 8330 WOODFIELD CROSSING BOULEVARD SUITE 200 INDIANAPOLIS, IN 46240	MCMURTREY, JOYCE MURDOCK, CHARLES THURSTON, MAX A. WOLFE, CHRISTINE BISESI, JAMES T. RAGAN, TERRI DONNELSON, DEAN COTTRELL, L. JOHN VALLINEY, STEPHEN L. JACKSON, BEVERLY J. EDMONDS, DENNIS MACFARLAND, DOUGLAS BASILE, FRANK M. CAMPBELL, DEAN HOUSTON, KIMBERLY	No No No No No No No No No No No No No No No
GENE B. GLICK COMPANY, INC. D/B/A GENE GLICK MANAGEMENT CORPORATION 8330 WOODFIELD CROSSING BOULEVARD, SUITE 200 INDIANAPOLIS, IN 46240 Federal Action No.: 073-44235-LDP	CARRIAGE HOUSE OF MISHAWAKA ASSOCIATES II 8330 WOODFIELD CROSSING BOULEVARD SUITE 200 INDIANAPOLIS, IN 46240	MCMURTREY, JOYCE MURDOCK, CHARLES THURSTON, MAX A. WOLFE, CHRISTINE BISESI, JAMES T. RAGAN, TERRI DONNELSON, DEAN COTTRELL, L. JOHN VALLINEY, STEPHEN L. JACKSON, BEVERLY J. EDMONDS, DENNIS MACFARLAND, DOUGLAS BASILE, FRANK M. CAMPBELL, DEAN HOUSTON, KIMBERLY	No No No No No No No No No No No No No No No

[FR Doc. 96–3251 Filed 2–13–96; 8:45 am]

BILLING CODE 4210–01–C

federal register

Wednesday
February 14, 1996

Part VI

Department of Labor

Office of Federal Contract Compliance Programs

41 CFR Part 60–741

Individuals With Disabilities; Affirmative Action and Nondiscrimination Obligations of Contractors and Subcontractors; Proposed Rule

DEPARTMENT OF LABOR

Office of Federal Contract Compliance Programs

41 CFR Part 60–741

RIN 1215–AA84

Affirmative Action and Nondiscrimination Obligations of Contractors and Subcontractors Regarding Individuals With Disabilities

AGENCY: Office of Federal Contract Compliance Programs, Labor.

ACTION: Proposed rule.

SUMMARY: The proposal published today would establish regulatory standards for granting ''separate facility'' waivers from the requirements of section 503 of the Rehabilitation Act of 1973. Section 503 requires Government contractors and subcontractors to take affirmative action to employ and advance in employment qualified individuals with disabilities. The Rehabilitation Act Amendments of 1992, among other things, amended section 503 to permit contractors and subcontractors to seek a waiver from the requirements of the regulations implementing section 503 for their facilities that are not connected with the performance of a Government contract or subcontract (i.e., ''separate facilities''). The 1992 amendments also required the issuance of regulations that set forth the standards to be used for granting such a waiver. The Office of Federal Contract Compliance Programs proposes amending its regulations implementing Section 503 to list those factors that OFCCP will consider when determining whether a ''separate facility'' waiver might be granted.

DATES: To be assured of consideration, comments must be in writing and must be received on or before April 15, 1996.

ADDRESSES: Comments should be sent to Joe N. Kennedy, Deputy Director, Office of Federal Contract Compliance Programs, Room C–3325, 200 Constitution Avenue NW., Washington, D.C. 20210.

As a convenience to commenters, OFCCP will accept public comments transmitted by facsimile (FAX) machine. The telephone number of the FAX receiver is (202)219–6195. To assure access to the FAX equipment, only public comments of six or fewer pages will be accepted via FAX transmittal. Receipt of FAX transmittals will not be acknowledged, except that the sender may request confirmation of receipt by calling OFCCP at (202)219–9430 (voice), 1(800)326–2577 (TDD).

Comments received in response to this proposed rule will be available for public inspection in OFCCP, Room C–3325, from 9 a.m. to 5 p.m., Monday through Friday, except legal holidays. Persons who need assistance to review the comments will be provided with appropriate aids such as readers or print magnifiers. To schedule an apppointment, call (202)219–9430 (voice) or 1(800)326–2577 (TDD).

FOR FURTHER INFORMATION CONTACT: Joe N. Kennedy, Deputy Director, Office of Federal Contract Compliance Programs, Room C–3325, 200 Constitution Avenue NW., Washington, DC 20210. Telephone: (202) 219–9475 (voice), 1(800)326–2577 (TDD). Copies of this notice of proposed rulemaking, including copies in alternate formats, may be obtained by calling OFCCP at (202)219–9430 (voice) or 1(800)326–2577 (TDD). The alternate formats available are large print, electronic file on computer disk and audio-tape.

SUPPLEMENTARY INFORMATION:

I. Background

Section 502 of the Rehabilitation Act of 1973, as amended (29 U.S.C. 793) (section 503 or the Act), requires parties holding Government contracts and subcontracts in excess of $10,000 to take affirmative action to employ and advance in employment qualified individuals with disabilities. The Department of Labor's Office of Federal Contract Compliance Programs enforces section 503 and has published implementing regulations at 41 CFR part 60–741.

Prior to a recent amendment, section 503(a) provided that Government contracts and subcontracts ''shall contain a provision requiring that, *in employing persons to carry out such contract*, the party contracting with the United States shall take affirmative action to employ and advance in employment'' qualified individuals with disabilities. (Emphasis added.) OFCCP implemented this provision by applying section 503 requirements to all of the contractor's work force unless the contractor sought, and was granted, a waiver. To clarify the scope of section 503 coverage, including the phrase ''to carry out such contract,'' OFCCP issued a regulation in 1974 that authorized OFCCP to waive the applicability of section 503 for those facilities that were not connected to Government contracts. 39 FR 20566, 20568 (June 11, 1974) (originally codified at 20 CFR 741.25(a)(5)). Such waivers required an advance contractor request and findings by OFCCP that the activities in question were in fact unrelated to Federal contracts. Specifically, the waiver regulation provided as follows:

> Facilities not connected with contracts. The Director may waive the requirements of the affirmative action clause with respect to any of a prime contractor's or subcontractor's facilities which he or she finds to be in all respects separate and distinct from activities of the prime contractor or subcontractor related to the performance of the contract or subcontract, provided that he or she also finds that such a waiver will not interfere with or impede the effectuation of the Act. Such waiver shall be considered only upon the request of the contractor or subcontractor.

41 CFR 60–741.3(a)(5).

Applying section 503 requirements in this manner was consistent with the scope of coverage under the other two Government contract-based civil rights laws administered by OFCCP. The section 503 separate facility waiver regulation mirrored the waiver provision in section 204 of Executive Order 11246, which imposes nondiscrimination and affirmative action obligations on Federal contractors with regard to race, color, religion, sex, and national origin. 30 FR 12319, 12321 (Sept. 28, 1965). *See also* 41 CFR 60–1.5(b)(2). In addition, the OFCCP regulations implementing the Vietnam Era Veterans' Readjustment Assistance Act of 1974 (VEVRAA), as amended, 38 U.S.C. 4212, which imposes nondiscrimination and affirmative action obligations on Federal contractors with regard to qualified special disabled veterans and Vietnam era veterans, contain an identical separate facility waiver at 41 CFR 60–250.3(a)(5).

The section 503 separate facility waiver regulation was invalidated, however, by a Federal district court in *Washington Metropolitan Area Transit Authority (WMATA)* v. *DeArment*, 55 EPD ¶ 40,507 (D.D.C. 1991). The court ruled that because the waiver regulation brings all contractor employees within the scope of the Act absent a waiver, the waiver provision was inconsistent with the express language of section 503 that only those employees who ''carry out'' Federal contracts are covered by the Act. *Contra E.E. Black, Ltd.* v. *Marshall* 497 F. Supp. 1088, 1092 (D. Haw. 1980).

In response to the *WMATA* decision, Congress enacted section 505(a)(2) of the Rehabilitation Act Amendments of 1992, Pub. L. 102–569, 106 Stat. 4344 (the 1992 amendments), to strike the limiting phrase '', in employing persons to carry out such contract,'' from section 503. This amendment expanded section 503 coverage to all of a contractor's work force at all of its facilities. As indicated in the legislative history of the enactment, the coverage amendment ''clarifies that the scope of the obligation under section 503 is parallel to the scope under Executive Order 11246.'' S.

Rep. No. 357, 102d Cong., 2d Sess. 72, *reprinted in* 1992 U.S. Code Cong. & Admin. News 3783.

In addition, ''in order to avoid any confusion'' regarding the effect of the coverage amendment on the waiver authority set forth in the OFCCP regulations at 41 CFR 60–741.3(a)(5), the 1992 amendments specifically included waiver authority in the legislation. S. Rep. No. 357, at 72 *reprinted in* 1992 U.S. Code Cong. & Admin. News 3783. Section 505(b) of the 1992 amendments codified the separate facility waiver regulation by expressly incorporating it (with minor editorial changes) into section 503. The full text of the waiver amendment, as it appears at section 503(c)(2) (A)–(B), 29 U.S.C. 793(c)(2) (A)–(B), reads as follows:

(A) The Secretary of Labor may waive the requirements of the affirmative action clause required by the regulations promulgated under [section 503(a)] with respect to any of a prime contractor's or subcontractor's facilities that are found to be in all respects separate and distinct from activities of the prime contractor or subcontractor related to the performance of the contract or subcontract, if the Secretary of Labor also finds that such a waiver will not interfere with or impeded the effectuation of this Act.

(B) Such waivers shall be considered only upon the request of the contractor or subcontractor. The Secretary of Labor shall promulgate regulations that set forth the standards used for granting such a waiver.

The affirmative action clause referenced in subsection (c)(2)(A) above appears at 41 CFR 60–741.4 and must be incorporated into all contracts and subcontracts covered by section 503. The clause sets out contractors' basic obligations under the Act, including the obligation to comply with the Act's implementing regulations. Accordingly, a waiver of the requirements of the affirmative action clause is effectively a waiver from the requirements of section 503 and its implementing regulations.

The waiver amendment requires OFCCP to make two separate findings in order to justify granting a waiver. First, as a threshold requirement, OFCCP must find that the facility for which the waiver is sought is in all respects separate and distinct from activities related to the performance of the contractor's Government contract. Second, if the facility is found to satisfy this ''separate and distinct'' prong, OFCCP must additionally find that the waiver will not interfere with or impede the effectuation of the Act.

II. Summary and Explanation of the Proposed Regulatory Standards

Section 505(b) of the 1992 amendments requires OFCCP to issue regulations that set forth the standards to be used for granting separate facility waivers under section 503. It should be noted that, historically, OFCCP has narrowly construed section 503 waiver provisions and similar waiver provisions under Executive Order 11246 (41 CFR 60–1.5(b)(2)) and VEVRAA (41 CFR 60–250.3(a)(5)). It is OFCCP's intent to continue its longstanding practice of interpreting the regulation narrowly so as to ''jealously guard'' the granting of waivers. Narrow interpretation of this exemption would be appropriate in light of the remedial nature of the Act and would be in accordance with the Act's purpose to improve employment opportunities for qualified individuals with disabilities. Moreover, such an approach is supported by the discretionary language of the 1992 statutory amendment. The 1992 amendment states that OFCCP ''may'' grant a waiver when a facility is in all respects separate and distinct and when the waiver would not interfere with or impede the effectuation of the Act, therefore, OFCCP is not compelled to grant a waiver in such circumstances.

OFCCP proposes to delete the current separate facility waiver regulation in 41 CFR 60–741.3(a)(5) and add the proposed separate facility waiver standards in new 41 CFR 60–741.3(b)(3). This reorganization would more logically group the separate facility waiver regulation with the other two waiver provisions under paragraph (b), i.e., waivers when there exist special circumstances in the national interest and waivers essential for national security reasons.

Proposed new paragraph (b)(3)(i) sets forth the general requirements for the granting of separate facility waivers.

Proposed subparagraphs (b)(3)(i) (A) and (B) recite the two threshold requirements codified in the 1992 amendments and present in the current regulation: (a) the facility is in all respects separate and distinct from activities of the contractor related to the performance of a contract; and (B) such a waiver will not interfere with or impede the effectuation of the Act. In compliance with the 1992 amendments, proposed paragraph (b)(3)(i) also indicates that waivers would only be considered by the ''Secretary's designee (i.e., the Deputy Assistant Secretary) upon written request by a prime contractor or subcontractor.

Proposed paragraph (b)(3)(i) also specifies that the contractor bears the burden of demonstrating that the granting of a waiver is appropriate. OFCCP believes that this is reasonable because only the contractor knows how it will deploy its resources to perform its Federal contracts. The requesting contractor would have the necessary factual information to support a waiver application, such as information on how the contract will be performed, the contractor's employment practices, and the structure and relationship between the contractor's facilities. Under the proposed rule, the requesting contractor would have the burden of supplying OFCC with relevant supporting material.

Proposed paragraphs (b)(3) (ii) and (iii) contain non-exhaustive lists of factors that may be considered by the Deputy Assistant Secretary in making a decision about whether the contractor has made a sufficient demonstration that the facility meets these standards. As noted above, because the statutory amendment permits OFCCP discretion to deny a waiver even where it finds both criteria are met, it permits OFCCP to consider other factors in determining whether the waiver should be granted.

Proposed paragraph (b)(3)(ii) lists factors that are associated with the question of whether the facility is in all respects separate and distinct from the activities of the contractor or subcontractor related to the performance of a contract. The proposed factors focus on the activities and employees at the facility for which the waiver is requested. The factors listed include: (A) whether any work at the facility supports or contributes to the satisfaction of the work performed on a Government contract or subcontract; (B) whether the facility benefits from a Government contract or subcontract; (C) whether any costs associated with operating the facility are charged to a Government contract or subcontract; (D) whether working at the facility is a prerequisite for advancement in job responsibility or pay; and (E) whether employees or applicants for employment at the facility may perform work related to a Government contract or subcontract or another facility.

The proposal specifies that the factors relating to whether the work performed at the facility supports, contributes to, or benefits from the performance of a contract (subparagraphs (A)–(B)), would include activities directly related to the performance of a contract and indirectly related activities that are necessary to, or facilitate performance of, a contract. Consideration of activities which are necessary to, or facilitate performance of, a contract would reflect the practical reality that the performance of a contract generally requires the cooperation of a variety of individuals engaged in auxiliary and related functions beyond the direct production of the goods or the provision of the services that are the object of a contract.

These indirectly related activities may include, for example: (1) The services of the personnel office responsible for the employees directly performing a Government contract where the personnel services are not carried out at the same facility at which these employees are located; (2) corporate headquarters' management activities relating to a facility directly performing a Government contract; and (3) maintenance of equipment and buildings used in performing a contract where the workers who perform the maintenance are not stationed at the same facility at which the equipment and buildings are located.

Regarding proposed subparagraph (C) relating to whether any costs associated with operating the facility are charged to a Government contract or subcontract, these costs might involve ''indirect'' costs as well as ''direct'' costs. OFCCP may consider, for example, whether the cost of positions located at a facility is allocable as either a direct or an indirect cost of a contract under the cost principles set forth in the Federal Acquisition Regulations (FAR) (48 CFR chapter 1). Under the cost allocation principle set forth in FAR 31.201–4, a cost is allocable to a particular Government contract if it: (1) Is incurred specifically for the contract; (2) benefits both the contract and other work, and can be distributed to them in reasonable proportion to the benefits received; or (3) is necessary to the overall operation of the business, although a direct relationship to any particular cost objective cannot be shown. A ''direct cost'' is any cost that is identified specifically with a particular final cost objective (such as a particular contract) and may be charged directly against that contract. FAR 31.202(a). An ''indirect cost'' is any cost not directly identified with a single final cost objective, but is identified with two or more final cost objectives, or an intermediate cost objective. Indirect costs are accumulated by logical cost groupings, and are then allocated among the final cost objectives included in the groupings on the basis of the benefits accruing to the objectives. FAR 31.203. OFCCP believes that if a contractor or subcontractor is receiving reimbursement from the Government for the costs of a position, then it is reasonable to conclude that the facility at which the position is located is contributing to the performance of the contract, and thus may not be ''separate and distinct.''

Proposed factors listed in (D) and (E) focus on the relationship between the employees at the facility for which the waiver is sought and facilities performing work on Government contracts. For example, under (D), if employees who work on a Federal contract at one facility must, at some future time, work at another facility for which a waiver is sought in order for them to advance in employment, the facility for which a waiver is sought may be inexorably linked to the employees working on the contract and, therefore, not ''separate and distinct.'' Under (E), OFCCP may consider, for example, whether employees at the facility for which a waiver is sought travel to another site or facility to engage in work related to a Government contract.

As noted above, because the 1992 statutory amendment permits OFCCP discretion to deny a waiver even where it finds both criteria are met, it permits OFCCP to consider other factors in determining whether the waiver should be granted. Proposed subparagraph (b)(3)(ii)(F) notes that the Deputy Assistant Secretary may consider factors not explicitly listed in the regulations when he or she believes such additional factors are necessary or appropriate in determining whether a facility is in all respects separate and distinct.

Proposed paragraph (b)(3)(iii) lists factors that the Deputy Assistant Secretary may consider when determining whether granting a waiver will interfere with or impede the effectuation of the Act. The factors listed include: (A) whether the waiver will be used as a subterfuge to circumvent the contractor's or subcontractor's obligations under the Act or implementing regulations; (B) the extent that the contractor or subcontractor is in compliance with the Act or implementing regulations; and (C) the impact of granting the waiver on OFCCP enforcement efforts.

In determining whether a waiver will be used as a subterfuge to circumvent the contractor's section 503 obligations, the Deputy Assistant Secretary may consider under factor (A), for example, whether the contractor restructured its operations to concentrate its Government contract work in certain facilities, or whether the contractor sought a waiver only after learning that the facility at issue was being scheduled for a section 503 compliance review. Under factor (B), consideration may be given, for example, to the results of any past section 503 complaint investigations or compliance reviews of the facility at issue, or of other facilities of the contractor.

Factor (C) focuses on the impact of granting a waiver on OFCCP enforcement efforts. Under this factor OFCCP might examine, for example, whether granting a waiver would simplify OFCCP's compliance review activity, or would complicate such compliance reviews. Consideration may be given to the expected duration of the contractor's Government contract(s) or subcontract(s), or to whether the contractor or subcontractor is covered by the written affirmative action program requirement under the section 503 regulations (see 41 CFR 60–741.5(a)). OFCCP might also consider under factor (C) that the facility for which the waiver is sought is the largest employer in a small town, or that the number of employees which would be removed from section 503 protection by the issuance of a waiver would be small.

Proposed subparagraph (iii) (D) specifies that the Deputy Assistant Secretary may deem other factors to be necessary and appropriate for considering whether granting a waiver would interfere with or impede the effectuation of the Act.

Proposed paragraph (b)(3)(iv) provides that waivers granted in accordance with paragraph (b)(3) may be withdrawn by the Deputy Assistant Secretary at any time when, in his or her judgment, such action is necessary or appropriate to achieve the purposes of the Act. A similar regulation providing for withdrawals of waivers is contained in current 41 CFR 60–741.3(c). Withdrawals of waivers would be appropriate when, for example, the contractor's operations has changed since the granting of the waiver and the facility is no longer in all respects separate and distinct from activities related to the performance of a contract. In addition, withdrawal of a waiver would be appropriate if OFCCP subsequently determines that the relevant facts upon which it relied in granting the waiver did not accurately or fully describe the relationship between the facility and the contractor's activities related to the performance of a contract. OFCCP may also determine that the waiver, in fact, interferes with or impedes the effectuation of the Act, as described above.

III. Regulatory Analyses

Executive Order 12866

The Secretary of Labor has determined that this proposed rule is not a significant regulatory action as defined in Executive Order 12866, and therefore a regulatory impact analysis is not required.

Regulatory Flexibility Act

The proposed rule, if promulgated, will not change existing obligations for Federal contractors and will only permit waivers to be sought by contractors large

enough to have facilities which are in all respects separate and distinct from the activities of the contractor related to the performance of a contract. Consequently, we certify that the rule will not have a significant economic impact on a substantial number of small business entities. Therefore, in accordance with the Regulatory Flexibility Act, 5 U.S.C. 605(b), a regulatory flexibility analysis is not required.

Paperwork Reduction Act

This proposed rule does not contain substantive or material modifications to previously approved information collection requirements, but will only clarify existing requirements for Federal contractors who request ''separate facility'' waivers. In view of this fact, and because the proposed rule does not change existing obligations for Federal contractors, the proposed rule creates no additional paperwork requirements above those contained in the current Information Collection Report (1215–0072), which has been approved by the Office of Management and Budget.

List of Subjects in 41 CFR Part 60–741

Administrative practice and procedure, Civil rights, Employment, Equal employment opportunity, Government contracts, Government procurement, Handicapped, Individuals with disabilities, Investigations, Reporting and recordkeeping requirements.

Signed at Washington, D.C. this 8th day of February 1996.

Robert B. Reich,

Secretary of Labor.

Bernard E. Anderson,

Assistant Secretary for Employment Standards.

Shirley J. Wilcher,

Deputy Assistant Secretary for Federal Contract Compliance.

Accordingly, Title 41 of the Code of Federal Regulations, Part 60–741 is proposed to be amended as follows:

PART 60–741—AFFIRMATIVE ACTION OBLIGATIONS OF CONTRACTORS AND SUBCONTRACTORS FOR HANDICAPPED WORKERS

1. The authority citation for part 60–741 is revised to read as follows:

Authority: Sec. 503, Pub. L. 93–112, 87 Stat. 393 (29 U.S.C. 793), as amended by sec. 111, Pub. L. 93–516, 88 Stat. 1619 (29 U.S.C. 706); sec. 103(d)(2)(B), Pub. L. 99–506, 100 Stat. 1810, 1843, 1844 (29 U.S.C. 706); sec. 9, Pub. L. 100–259, 102 Stat. 31–32 (29 U.S.C. 706); sec. 512, Pub. L. 101–336, 104 Stat. 377 (29 U.S.C. 706); sec. 505, Pub. L. 102–569, 106 Stat. 4427–28 (29 U.S.C. 793); and E.O. 11758 (3 CFR, 1971–1975 Comp., p. 841).

§ 60.741.3 [Amended]

2. In § 60–741.3, paragraph (a)(5) is removed.

3. A new paragraph (b)(3) is added to § 60–741.3 to read as follows:

§ 60–741.3 Coverage and waivers.

* * * * *

(b) * * *

(3) *Facilities not connected with contracts.*

(i) Upon the written request of the contractor, the Deputy Assistant Secretary may waive the requirements of the equal opportunity clause with respect to any of a contractor's facilities if the Deputy Assistant Secretary finds that the contractor has demonstrated that:

(A) The facility is in all respects separate and distinct from activities of the contractor related to the performance of a contract; and

(B) Such a waiver will not interfere with or impede the effectuation of the Act.

(ii) The Deputy Assistant Secretary's findings as to whether the facility is separate and distinct in all respects from activities of the contractor related to the performance of a contract may include consideration of the following factors:

(A) Whether any work at the facility directly or indirectly supports or contributes to the satisfaction of the work performed on a Government contract;

(B) The extent to which the facility benefits, directly or indirectly, from a Government contract;

(C) Whether any costs associated with operating the facility are charged to a Government contract;

(D) Whether working at the facility is a prerequisite for advancement in job responsibility or pay;

(E) Whether employees or applicants for employment at the facility may perform work related to a Government contract at another facility; and

(F) Such other factors that the Deputy Assistant Secretary deems are necessary or appropriate for considering whether the facility is in all respects separate and distinct from the activities of the contractor related to the performance of a contract.

(iii) The Deputy Assistant Secretary's findings as to whether granting a waiver will interfere with or impede the effectuation of the Act may include consideration of the following factors:

(A) Whether the waiver will be used as a subterfuge to circumvent the contractor's obligations under the Act;

(B) The section 503 compliance status of the contractor;

(C) The impact of granting the waiver on OFCCP enforcement efforts; and

(D) Such other factors that the Deputy Assistant Secretary deems are necessary or appropriate for considering whether the granting of the waiver would interfere with or impede the effectuation of the Act.

(iv) When a waiver has been granted for facilities not connected to a Government contract in accordance with paragraph (b)(3) of this section, the Deputy Assistant Secretary may at any time withdraw the waiver when in his or her judgment such action is necessary or appropriate to achieve the purposes of the Act.

* * * * *

[FR Doc. 96–3277 Filed 2–13–96; 8:45 am]

BILLING CODE 4510–27–M

federal register

Wednesday
February 14, 1996

Part VII

Department of Education

Inviting Applications for Designation as an Eligible Institution for Fiscal Year 1996 for the Strengthening Institutions, Hispanic-serving Institutions, and Endowment Challenge Grant Programs; Notice

DEPARTMENT OF EDUCATION

[CFDA No. 84.031A, CFDA No. 84.031G]

Notice Inviting Applications for Designation as an Eligible Institution for Fiscal Year 1996 for the Strengthening Institutions, Hispanic-serving Institutions (HSIs), and Endowment Challenge Grant Programs

Purpose: Institutions of higher education must meet specific statutory and regulatory requirements to be designated eligible to receive funds under the Strengthening Institutions, HSI, and Endowment Challenge Grant Programs, authorized, respectively, under Part A, Section 316, and Part C of Title III of the Higher Education Act of 1965, as amended (HEA).

Beginning in Fiscal Year 1995, the Department of Education (Department) instituted biennial grant award competitions under both the Strengthening Institutions and HSI Programs. Under the biennial grant award competition system, an institution applied in Fiscal Year 1995 to be considered for either a Fiscal Year 1995 or Fiscal Year 1996 grant award. As part of that system, no new grant award applications would be accepted for Fiscal Year 1996 grant awards under either program. (See the Federal Register of March 7, 1995, 60 FR 12543, for the Strengthening Institutions Program Fiscal Year 1995 closing date notice and the Federal Register of March 23, 1995, 60 FR 15448, for the HSI Program Fiscal Year 1995 closing date notice.)

Under the biennial grant award competition system, field readers evaluated and ranked all applications for both the Strengthening Institutions and HSI Programs. An application not selected for funding under the Fiscal Year 1995 grant award competition would be selected for funding under the Fiscal Year 1996 grant award competition based upon the rank order score it received in the field reader evaluation and ranking, and available funds.

The biennial grant award competition system has the following institutional eligibility implications. To receive a new grant in Fiscal Year 1996 under either the Strengthening Institutions or HSI Program, an institution must submit a Title III eligibility application to the Department by the deadline dates set forth in this notice and must qualify as an eligible institution under this notice. However, interested institutions are advised that as of the date of this notice, Congress has not appropriated sufficient funds in Fiscal Year 1996 to fund new grants under either program.

The Endowment Challenge Grant Program is not under the biennial grant award system. Thus, if an institution of higher education wishes to apply for a new grant under a Fiscal Year 1996 funding competition, unless it is an Historically Black College or University, it must submit a Title III eligibility application to the Department by the deadline dates set forth in this notice and must qualify as an eligible institution under this notice. However, interested institutions are advised that as of the date of this notice, Congress has not appropriated any Endowment Challenge Grant Program funds for Fiscal Year 1996.

Additionally, institutions that wish to be considered for waivers of certain non-Federal share requirements under the Federal Work-Study (FWS) or Federal Supplemental Educational Opportunity Grant (FSEOG) Programs authorized under Title IV of the HEA must submit a Title III eligibility application to the Department by the deadline dates set forth in this notice and must qualify as an eligible institution under this notice. Qualified institutions may receive these waivers even if they are not recipients of grants funds under Title III.

Notwithstanding the absence of funding for new awards in Fiscal Year 1996, if an institution is interested in obtaining eligibility for purposes of receiving a new grant under the Strengthening Institutions or HSI Programs, applying for a new grant under the Endowment Challenge Grant Program, or receiving a waiver of the non-federal share under FWS or FSEOG Programs, it must submit its Title III eligibility application to the Department by June 3, 1996. However, if an institution submits its application by April 30, 1996, the Department will notify the applicants of its eligibility status by May 31, 1996. An applicant that believes it failed to be designated as an eligible institution because of errors in its application or insufficient information in its waiver request may submit an amended application to the Department no later than June 21, 1996.

If an applicant submits its initial application after April 30, 1996 but on or before June, 1996, the Department does not guarantee that it can review this delayed application and notify the applicant in time to allow revisions to the application by the June 21, 1996 deadline date for amended applications.

Deadline for Transmittal of Applications: April 30, 1996 for early applications, June 3, 1996 for all initial applications, and June 21, 1996 for amended applications.

Applications Available: March 15, 1996.

Eligibility Information: To qualify as an eligible institution under the Strengthening Institutions and Endowment Challenge Grant Programs, an applicant must (1) be accredited or preaccredited by a nationally recognized accrediting agency; (2) be legally authorized by the State in which it is located to be a junior or community college or to provide a bachelor's degree program; and (3) have a high enrollment of needy students. In addition, its educational and general (E&G) expenditures per full-time equivalent (FTE) undergraduate student must be low in comparison with the average E&G expenditures per FTE undergraduate student of institutions that offer similar instruction. The complete eligibility requirements are found in the Strengthening Institutions Program regulations, 34 CFR §§ 607.2–607.5, as revised in the Federal Register on August 15, 1994 (59 FR 41914, 41922).

Enrollment of Needy Students: Under 34 CFR § 607.3(a), an institution is considered to have a high enrollment of needy students if—(1) at least 50 percent of its degree students received financial assistance under one or more of the following programs: Pell Grant, Supplemental Educational Opportunity Grant, College Work Study, or Perkins Loan Program; or (2) the percentage of its undergraduate degree students who were enrolled on at least a half-time basis and received Pell Grants exceeded the median percentage of undergraduate degree students who were enrolled on at least a half-time basis and received Pell Grants at comparable institutions that offer similar instruction. To qualify under this latter criterion, an institution's Pell Grant percentage for base year 1993–94 must be more than the median for its category of comparable institutions provided on the table in this notice.

E&G Expenditures Per FTE Student: An institution should compare its average E&G expenditure/FTE student to the average E&G expenditure/FTE student for its category of comparable institutions contained in the table in this notice. If the institution's average E&G expenditure for the 1993–94 base year is less than the average for its category of comparable institutions, it meets this eligibility requirement.

The institution's E&G expenditures are the total amount it expended during the base year for instruction, research, public service, academic support, student services, institutional support, operation and maintenance,

scholarships and fellowships, and mandatory transfers.

The following table identifies the relevant median Pell Grant percentages and the average E&G expenditures per FTE student for the 1993–94 base year for the four categories of comparable institutions:

	Median Pell grant percentage	Average E&G per FTE student
2-year Public Institutions	31.58	$6,044
2-year Non-Profit Private Institutions	30.76	$8,839
4-year Public Institutions	28.87	$14,716
4-year Non-Profit Private Institutions	29.00	$21,012

Waiver Information: Institutions of higher education that are unable to meet the needy student enrollment requirement or the E&G expenditure requirement may apply to the Secretary for waivers of these requirements, as described in 34 CFR §§ 607.3(b) and 607.4(c) and (d). As discussed in the preamble to the final regulations published in the Federal Register on August 15, 1994 (59 FR 41914–41917), the Secretary has developed a set of more specific instructions relating to the waiver provisions for institutions unable to meet the needy student enrollment requirement. Institutions requesting a waiver of this requirement must include detailed information as set forth in the instructions for completing the application.

Under the waiver authority provided in 34 CFR § 607.3(b)(2), an institution must demonstrate that at least 30 percent of the students it served in base year 1993–94 were from low-income families. The regulations define ''low-income'' as an amount that does not exceed 150 percent of the amount equal to the poverty level as established by the U.S. Bureau of the Census, 34 CFR § 607.3(c). For the purposes of this waiver provision, the following table sets forth the low-income levels for the various sizes of families:

Base Year Low-Income Levels

Size of family unit	Contiguous 48 States, the District of Columbia, and outlying jurisdictions	Alaska	Hawaii
1	$6,970	$8,700	$8,040
2	9,430	11,780	10,860
3	11,890	14,860	13,680
4	14,350	17,940	16,500
5	16,810	21,020	19,230
6	19,270	24,100	22,140
7	21,730	27,180	24,960
8	24,190	30,260	27,780

For family units with more than eight members add the following amount for each additional family member: $2,460 for the contiguous 48 states, the District of Columbia and outlying jurisdictions; $3,080 for Alaska; and $2,820 for Hawaii.

The figures shown as low-income levels represent amounts equal to 150 percent of the family income levels established by the U.S. Bureau of the Census for determining poverty status. The Census levels were published by the U.S. Department of Health and Human Services in the Federal Register on February 12, 1993 (58 FR 8287–8289). In reference to the waiver option specified in § 607.3(b)(4) of the regulations, information about ''metropolitan statistical areas'' may be obtained by requesting the *Metropolitan Statistical Areas,* 1993, order number PB93–192664, from the National Technical Information Services, Document Sales, 5285 Port Royal Road, Springfield, Virginia 22161, telephone number (703) 487–4650. There is a charge for this publication. For general information about ''metropolitan statistical areas,'' institutions of higher education may contact the Strengthening Institutions Program Branch.

Applicable Regulations: Regulations applicable to the eligibility process include: (a) The Strengthening Institutions Program Regulations in 34 CFR Part 607, as revised in the Federal Register on August 15, 1994 (59 FR 41914); (b) the Endowment Challenge Grant Program Regulations in 34 CFR Part 628; and (c) the Education Department General Administrative Regulations in 34 CFR Parts 74, 75, 77, 82, 85, and 86.

For Applications or Information Contact: Strengthening Institutions Program Branch, Division of Institutional Development, U.S. Department of Education, 600 Independence Avenue, S.W., (Suite 600–C, Portals Building), Washington, D.C. 20202–5335. Telephone: (202) 708–8839. Individuals who use a telecommunications device for the deaf (TDD) may call the Federal Information Relay Service (FIRS) at 1–800–877–8339 between 8 a.m. and 8 p.m., Eastern time, Monday through Friday.

Information about the Department's funding opportunities, including copies of application notices for discretionary grant competitions, can be viewed on the Department's electronic bulletin board (ED Board), telephone (202) 260–9950; or on the Internet Gopher Server at GOPHER.ED.GOV (under Announcements, Bulletins and Press Releases). However, the official application notice for a discretionary grant competition is the notice published in the Federal Register.

Program Authority: 20 U.S.C. 1057, 1059c and 1065a.

Dated: February 9, 1996.

David A. Longanecker,

Assistant Secretary for Postsecondary Education.

[FR Doc. 96–3320 Filed 2–13–96; 8:45 am]

BILLING CODE 4000–01–P

federal register

Wednesday
February 14, 1996

Part VIII

Department of Health and Human Services

Food and Drug Administration

21 CFR Parts 201 and 369

Over-the-Counter Drug Products Containing Phenylpropanolamine; Required Labeling; Proposed Rule

DEPARTMENT OF HEALTH AND HUMAN SERVICES

Food and Drug Administration

21 CFR Parts 201 and 369

[Docket No. 95N–0060]

Over-the-Counter Drug Products Containing Phenylpropanolamine; Required Labeling

AGENCY: Food and Drug Administration, HHS.

ACTION: Proposed rule.

SUMMARY: The Food and Drug Administration (FDA) is proposing new warning labeling for all over-the-counter (OTC) drug products containing phenylpropanolamine preparations (phenylpropanolamine bitartrate, phenylpropanolamine hydrochloride, and phenylpropanolamine maleate). Phenylpropanolamine is a sympathomimetic drug that is used in OTC weight control, cough-cold, nasal decongestant, and allergy drug products. The warnings will advise consumers not to take more than the recommended dose of phenylpropanolamine, not to take phenylpropanolamine with certain prescription drugs, and not to take phenylpropanolamine under certain conditions. The warnings will also advise consumers that they should not take a phenylpropanolamine drug product with any other drug product containing the ingredients phenylpropanolamine, phenylephrine, pseudoephedrine, or ephedrine, which are sympathomimetic drugs commonly found in allergy, asthma, cough-cold, nasal decongestant, and weight control drug products. These drugs could be harmful if taken together.

DATES: Submit comments on the proposed regulation by May 14, 1996. Written comments on the agency's economic impact determination by May 14, 1996. FDA is proposing that any final rule based on this proposal be effective 6 months after the date of its publication in the Federal Register.

ADDRESSES: Written comments to the Dockets Management Branch (HFA–305), Food and Drug Administration, rm. 1–23, 12420 Parklawn Dr., Rockville, MD 20857.

FOR FURTHER INFORMATION CONTACT: William E. Gilbertson, Center for Drug Evaluation and Research (HFD–105), Food and Drug Administration, 5600 Fishers Lane, Rockville, MD 20857, 301–827–2304.

SUPPLEMENTARY INFORMATION:

I. Background

In the Federal Register of September 9, 1976 (41 FR 38312), the Advisory Review Panel on OTC Cold, Cough, Allergy, Bronchodilator, and Antiasthmatic Drug Products (Cough-Cold Panel) recommended that phenylpropanolamine be classified in Category I (generally recognized as safe and effective, and not misbranded) for nasal decongestant use at adult oral dosages equivalent to the following phenylpropanolamine hydrochloride dosages: 25 milligrams (mg) every 4 hours (h) or 50 mg every 8 h, not to exceed 150 mg in 24 h (41 FR 38312 at 38420). The agency has allowed these dosages for phenylpropanolamine hydrochloride for OTC cough-cold use and is including these dosages in this proposal. The Federal Register of February 26, 1982 (47 FR 8466), the Advisory Review Panel on OTC Miscellaneous Internal Drug Products (Miscellaneous Internal Panel) recommended that phenylpropanolamine hydrochloride be classified as Category I for weight control use in adult oral dosages of 25 to 50 mg, not to exceed 150 mg daily. As discussed below, the agency has limited OTC phenylpropanolamine hydrochloride dosages for weight control to 75 mg daily and, based on its indication for use, is including that dosage in this proposal.

After the Miscellaneous Internal Panel completed its report, the agency became award of studies indicating that certain dosages of phenylpropanolamine cause blood pressure elevation. These studies were discussed in the preamble to the advance notice of proposed rulemaking for OTC weight control drug products (47 FR 8466 through 8468). At that time, the agency specifically requested comments and information on the extent to which phenylpropanolamine induces or aggravates hypertension. The agency also stated that it would not allow any increase in OTC weight control dosages above those currently permitted: An immediate-release dose of up to 37.5 mg and a time-release dose of up to 75 mg phenylpropanolamine, with the total daily dose not to exceed 75 mg in either case.

Many comments were submitted in response to the agency's request for information concerning the safety of phenylpropanolamine. Some comments requested that phenylpropanolamine be removed from the OTC drug market because of its association with increased blood pressure and other adverse effects. Other comments contended that phenylpropanolamine is safe for OTC use.

After preliminary evaluation of the information submitted by these comments, FDA determined that phenylpropanolamine produces hemodynamic effects (raises blood pressure), but that the data were inadequate to respond to the agency's safety concerns. Subsequently, in meetings with industry on December 2, 1983, and April 11, 1984, the agency discussed its requirements for adequate studies to address this concern about phenylpropanolamine (Refs. 1 and 2). The agency concluded that data were required to: (1) Determine if phenylpropanolamine plays any role in adverse events such as stroke or seizure and other serious adverse reactions that have been reported in association with this drug, and (2) provide information on other possible risk factors (e.g., age, hypertension, concomitant drug use, or disease conditions) associated with phenylpropanolamine use.

In response to the agency's request for data and information, drug manufacturers submitted new dose-response studies designed to investigate the blood pressure effects of phenylpropanolamine. After reviewing all available information, FDA remains concerned about the possibility that phenylpropanolamine used in OTC drug products might increase the risk of hemorrhagic stroke (Ref. 3). The possible risk of stroke is suggested by a relatively small number of spontaneous reports (published and unpublished) of intracranial bleeding, typically in young, female users of phenylpropanolamine weight control drug products, and by the known ability of phenylpropanolamine to transiently increase blood pressure (Ref. 4). A possible mechanism of these reported events, if indeed they are caused by phenylpropanolamine, is an exaggerated hypertensive response, although in most cases no large elevation in blood pressure was detected in association with the hemorrhage. Based on the available data, the agency cannot rule out the possibility that phenylpropanolamine may increase the risk of stroke. This possible risk could be further increased if the recommended dose of phenylpropanolamine was inadvertently exceeded, e.g., taken from two products labeled for different uses.

Because of these concerns, in 1994 the OTC drug industry initiated a large-scale, population-based epidemiologic study of the relationship between OTC phenylpropanolamine drug products and the incidence of hemorrhagic stroke (Ref. 5). However, the study is not expected to be completed until 1998.

The agency believes this study will provide a sufficiently large data base to help determine whether the incidence of stroke associated with ingestion of phenylpropanolamine is greater than the spontaneous rate of stroke, i.e., the rate that would be expected to occur in a similar population not using the drug. The agency does not believe, however, based on information currently available, that phenylpropanolamine used in OTC weight control drug products represents a substantial public health risk. The agency, therefore, does not believe that it is necessary to remove phenylpropanolamine weight control drug products from the OTC market while additional data are being obtained.

While this study is being conducted, the OTC drug industry has proposed additional labeling for OTC phenylpropanolamine weight control drug products to help ensure that their use is confined to adults and that the recommended dose is not exceeded (Ref. 6). Industry's proposal includes a new warning that states: ''If nervousness, dizziness, sleeplessness, palpitations, or headache occur, stop using this medication and consult your physician.'' The proposal also includes a new, separate drug interaction precaution that states:

DRUG INTERACTION PRECAUTION: If you are taking a cough-cold or allergy medication containing any form of phenylpropanolamine, or any type of nasal decongestant, do not take this product. Do not take this product if you are taking any prescription drug, except under the advice and supervision of a physician. Do not use this product if you are presently taking a prescription monoamine oxidase inhibitor (MAOI) for depression or for two weeks after stopping use of an MAOI without first consulting a physician.

In addition, the OTC drug industry's proposal includes a warning that states ''Persons between 12 and 18 are advised to consult their physician before using this product.'' The agency believes that people under 18 years of age should not use an OTC weight control drug product unless specifically directed by a doctor and is modifying that statement in § 201.321(c)(1) of this proposal.

In considering these proposals, the agency notes that the Miscellaneous Internal Panel stated that ingestion of phenylpropanolamine can be expected to cause vasoconstriction, bronchodilation, and tachycardia, because of its alpha and beta adrenergic effects. Large doses would be expected to cause anxiety, excitement, insomnia, headache, cardiac arrhythmias, convulsions, and circulatory collapse (47 FR 8466 at 8474). The Miscellaneous Internal Panel was concerned that a person might ingest a dose of phenylpropanolamine to reduce nasal congestion and another dose from a different product for weight control, and that the combined doses might have adverse effects. Accordingly, the Miscellaneous Internal Panel recommended a warning statement concerning this possibility on all drug products containing phenylpropanolamine, and included the following language in its monograph for OTC weight control drug products (47 FR 8475): ''If you are taking a cough-cold or allergy medication containing any form of phenylpropanolamine, do not take this product.''

Many manufacturers of OTC phenylpropanolamine weight control drug products have voluntarily included this warning in product labeling following publication of the Miscellaneous Internal Panel's report. However, the rulemakings for OTC phenylpropanolamine nasal decongestant and weight control drug products will not be completed until after the phenylpropanolamine epidemiologic study is completed and the data assessed. The agency believes that implementation of these warnings should not await the completion of these monograph proceedings, but that a warning should be required on all OTC phenylpropanolamine drug products at this time.

Similarly, because phenylpropanolamine is a sympathomimetic drug (affects the central nervous system, cardiovascular system, and basal metabolic rate), the agency believes that phenylpropanolamine should not be used simultaneously with other sympathomimetic drugs, e.g., pseudoephedrine, ephedrine, or phenylephrine, that would have similar effects on the body. The agency believes that labeling OTC phenylpropanolamine drug products should advise consumers to avoid use while they are using any other sympathomimetic drugs.

FDA concurs with the industry's labeling proposals but has broadened the labeling to include other sympathomimetic drug ingredients and the kinds of products in which they are used. FDA has sufficient concern that adverse reactions could occur from taking phenylpropanolamine in different drug products or from combining sympathomimetic drugs; thus, this information should be included in the ''Warnings'' statement.

In the final rule for OTC nasal decongestant drug products, published in the Federal Register of August 23, 1994 (59 FR 43386), the agency included a drug interaction precaution statement regarding the use of sympathomimetic drugs in combination with MAOI drugs. That statement (in § 341.80(c)(1)(i)(D)) (21 CFR 341.80(c)(1)(i)(D) includes certain conditions (i.e., depression, psychiatric or emotional conditions, Parkinson's disease) for which MAOI drugs are used. A similar statement (but not listing Parkinson's disease) appears in § 341.80(c)(1)(ii)(D) for products labeled for children under 12 years of age. Products labeled for both adults and children under 12 years of age use the statement in paragraph (c)(1)(i)(D). In addition, the statement instructs consumers to consult a health professional if they are uncertain that they are using an MAOI drug. The agency is proposing a shortened version of this precaution statement in the labeling approach used in this current proposal. The agency is asking for comments on how to further shorten or improve this precaution statement. If a shortened version is eventually incorporated in a final rule, the agency will revise § 341.80 accordingly at that time.

II. References

The following information has been placed on display in the Dockets Management Branch (address above) and may be seen by interested persons between 9 a.m. and 4 p.m., Monday through Friday.

(1) Memorandum of meeting between Industry and FDA Personnel, December 2, 1983, coded MM0002, Docket No. 81N–0022, Dockets Management Branch.

(2) Memorandum of meeting between Industry and FDA Personnel, April 11, 1984, coded MM0003, Docket No. 81N–0022, Dockets Management Branch.

(3) Comment No. LET86, Docket No. 81N–0022, Dockets Management Branch.

(4) Blackburn, G.L. et al., ''Determinants of the Pressor Effect of Phenylpropanolamine in Healthy Subjects,'' *Journal of the American Medical Association*, 261:3267–3271, 1989, in Comment No. C94, Vol. 6, Docket No. 81N–0022, Dockets Management Branch.

(5) Comment No. MM11, Docket No. 81N–0022, Dockets Management Branch.

(6) Comment No. C107, Docket No. 81N–0022, Dockets Management Branch.

III. The Agency Proposal

The agency is proposing to amend part 201 (21 CFR part 201) by adding new § 201.321 entitled: ''Over-the-counter drugs containing phenylpropanolamine as an active ingredient; required warnings.'' This section would require new warnings for all OTC drug products containing phenylpropanolamine. The agency has made an effort to shorten and simplify the labeling by combining the warnings and drug interaction precautions under

four new headings in the ''Warnings'' section. Manufacturers can use bullets or other identifying marks to emphasize the warnings. The format of the ''Warnings'' section of the product's labeling might look something like the following:

DO NOT TAKE MORE THAN (these words in bold print and capital letters) 75 milligrams per day (24 hours). Taking more can be harmful. DO NOT TAKE IF (these words in bold print and capital letters) you have

- Heart or thyroid disease
- High blood pressure
- An enlarged prostrate gland

Unless directed by a doctor.

STOP USING IF (these words in bold print and capital letters) you develop

- Nervousness
- Dizziness
- Sleeplessness
- Headache
- Palpitations.

If symptoms continue, ask a doctor. DO NOT USE WITH (these words in bold print and capital letters)

- A monoamine oxidase inhibitor (MAOI) (certain drugs for depression, psychiatric or emotional conditions, or Parkinson's disease), or for 2 weeks after stopping the MAOI drug. If unsure, ask a health professional.
- Any allergy, asthma, cough-cold, nasal decongestant, or weight control product (containing phenylpropanolamine, phenylephrine, pseudoephedrine, or ephedrine), or any prescription drug, unless directed by a doctor.

The agency is proposing this format as an example of how this warning information might be presented in a clearer and more readable way. The agency is currently considering a new standardized format for the labeling of all OTC drug products. (See the Federal Register of August 16, 1995, 60 FR 42578). Thus, the format proposed in this document may change in the future as a format is developed to label all classes of OTC drug products. At this time, the agency is primarily seeking specific comment on the wording of the proposed warnings for phenylpropanolamine. Comments on the labeling format will also be considered. As discussed below, the agency is encouraging manufacturers to implement this proposed labeling for their phenylpropanolamine drug products as soon as possible. The agency's proposed labeling format or any similar format would be acceptable to use at this time.

The agency is aware that the labeling proposed by the OTC drug industry is currently being used by some manufacturers of OTC phenylpropanolamine weight control drug products. FDA encourages manufacturers of all OTC drug products containing phenylpropanolamine to implement the agency's proposed labeling statements voluntarily as soon as possible, subject to the possibility that FDA may change the wording of the statements, or not require the statements, as a result of comments filed in response to this proposal. Because FDA is encouraging that the proposed labeling statements be used on a voluntary basis at this time, the agency advises that manufacturers will be given ample time after publication of a final rule based on this proposal to use up any labeling implemented in conformance with this proposal. The agency considers these warnings to be important to the safe use of OTC drug products containing phenylpropanolamine. Therefore, the agency proposes that this new labeling become effective 6 months after the date of publication of the final rule in the Federal Register. The agency proposes to revoke the existing warning statements in § 369.20 (21 CFR 369.20) for ''NASAL PREPARATIONS: VASOCONSTRICTORS,'' and ''PHENYLPROPANOLAMINE HYDROCHLORIDE PREPARATIONS, ORAL'' at the time that any final rule based on this proposal becomes effective.

IV. Analysis of Impacts

FDA has examined the impacts of the proposed rule under Executive Order 12866 and the Regulatory Flexibility Act (Pub. L. 96–354). Executive Order 12866 directs agencies to assess all costs and benefits of available regulatory alternatives and, when regulation is necessary, to select regulatory approaches that maximize net benefits (including potential economic, environmental, public health and safety, and other advantages; distributive impacts; and equity). The agency believes that this proposed rule is consistent with the regulatory philosophy and principles identified in the Executive Order. In addition, the proposed rule is not a significant regulatory action as defined by the Executive Order and, thus, is not subject to review under the Executive Order.

The Regulatory Flexibility Act requires agencies to analyze regulatory options that would minimize any significant impact of a rule on small entities. This proposed rule will require some relabeling for products containing phenylpropanolamine. This relabeling will impose direct one-time costs that are expected to be minimal. Accordingly, the agency certifies that the proposed rule will not have a significant economic impact on a substantial number of small entities. Therefore, under the Regulatory Flexibility Act, no further analysis is required.

The agency invites public comment regarding any substantial or significant economic impact that this rulemaking would have on manufacturers of drug products containing phenylpropanolamine. Comments regarding the impact of this rulemaking on OTC phenylpropanolamine drug products should be accompanied by appropriate documentation. A period of 90 days from the date of publication of this proposed rulemaking in the Federal Register will be provided for comments on this subject to be developed and submitted. The agency will evaluate any comments and supporting data that are received and will reassess the economic impact of this rulemaking in the preamble to the final rule.

Paperwork Reduction Act of 1995

FDA tentatively concludes that the labeling requirements proposed in this document are not subject to review by the Office of Management and Budget because they do not constitute a ''collection of information'' under the Paperwork Reduction Act of 1995 (44 U.S.C. 3501 *et seq.).* Rather, the proposed warning statements are a ''public disclosure of information originally supplied by the Federal government to the recipient for the purpose of disclosure to the public'' (5 CFR 1320.3(c)(2)).

VI. Environmental Impact

The agency has determined under 21 CFR 25.24(c)(6) that this action is of a type that does not individually or cumulatively have a significant effect on the human environment. Therefore, neither an environmental assessment not an environmental impact statement is required.

VII. Request for Comments

Interested persons may, on or before May 14, 1996, submit written comments on the proposed regulation to the Dockets Management Branch (address above). Written comments on the agency's economic impact determination may be submitted on or before May 14, 1996. Three copies of all comments are to be submitted, except that individuals may submit one copy. Comments are to be identified with the docket number found in brackets in the heading of this document and may be accompanied by a supporting memorandum or brief. Received comments may be seen in the office above between 9 a.m. and 4 p.m., Monday through Friday.

List of Subjects

21 CFR Part 201

Drugs, Labeling, Reporting and recordkeeping requirements.

21 CFR Part 369

Labeling, Medical devices, Over-the-counter drugs.

Therefore, under the Federal Food, Drug, and Cosmetic Act, and under authority delegated to the Commissioner of Food and Drugs, it is proposed that 21 CFR parts 201 and 369 be amended as follows:

PART 201—LABELING

1. The authority citation for 21 CFR Part 201 continues to read as follows:

Authority: Secs. 201, 301, 501, 502, 503, 505, 506, 507, 508, 510, 512, 530–542, 701, 704, 721 of the Federal Food, Drug, and Cosmetic Act (21 U.S.C. 321, 331, 351, 352, 353, 355, 356, 357, 358, 360, 360b, 360gg–360ss, 371, 374, 379e); secs. 215, 301, 351, 361 of the Public Health Service Act (42 U.S.C. 216, 241, 262, 264).

2. New § 201.321 is added to subpart G to read as follows:

§ 201.321 Over-the-counter drugs containing phenylpropanolamine as an active ingredient; required labeling.

(a) Phenylpropanolamine is a sympathomimetic drug used in both over-the-counter (OTC) weight control and nasal decongestant (cough-cold) drug products. The Food and Drug Administration is concerned that adverse reactions could occur if a consumer inadvertently ingests excessive amounts of phenylpropanolamine by taking a weight control and a cough-cold drug product containing phenylpropanolamine concurrently, or by taking products containing phenylpropanolamine and another sympathomimetic drug (nasal decongestant or bronchodilator) concurrently. In addition, because phenylpropanolamine is a sympathomimetic ingredient that interacts with monoamine oxidase inhibitor drugs and can cause serious adverse effects, the two types of drugs should not be taken concurrently. Further, phenylpropanolamine should not be used by persons with high blood pressure, heart or thyroid disease, or diabetes.

(b) Any allergy, cough-cold, or nasal decongestant drug product containing phenylpropanolamine bitartrate, phenylpropanolamine hydrochloride, or phenylpropanolamine maleate as an active ingredient in an oral dosage form for OTC use as described in paragraph (a) of this section is misbranded within the meaning of section 502 of the Federal Food, Drug, and Cosmetic Act (the act) unless its labeling bears the following statements under the heading ''WARNINGS:''

(1) *For oral nasal decongestants labeled for adults only or for both adults and children under 12 years of age.*

(i) ''DO NOT TAKE MORE THAN'' (these five words in bold print and capital letters) (insert maximum 150 mg daily adult dose in a 24-hour period or maximum children's doses broken down by age groups, expressed in units such as capsules or teaspoonfuls) ''per day (24 hours). Taking more can be harmful.''

(ii) ''DO NOT TAKE IF'' (these four words in bold print and capital letters) ''you have heart or thyroid disease, high blood pressure, or an enlarged prostate gland, unless directed by a doctor.'' (Information may be indented and/or preceded by a bullet or other identifying mark.)

(iii) ''STOP USING IF'' (these three words in bold print and capital letters) ''you develop nervousness, dizziness, sleeplessness, headache, or palpitations. If symptoms continue, ask a doctor.'' (Information may be indented and/or preceded by a bullet or other identifying mark.)

(iv) ''DO NOT USE WITH'' (these four words in bold print and capital letters) (a) ''a monoamine oxidase inhibitor (MAOI) (certain drugs for depression, psychiatric or emotional conditions, or Parkinson's disease), or for 2 weeks after stopping the MAOI drug. If unsure, ask a health professional.'' (b) ''any allergy, asthma, cough-cold, nasal decongestant, or weight control product (containing phenylpropanolamine, phenylephrine, pseudoephedrine, or ephedrine), or any prescription drug, unless directed by a doctor.'' (Statements (a) and (b) under this heading may be indented and/or preceded by a bullet or other identifying mark.)

(2) *For oral nasal decongestants labeled only for children under 12 years of age.* The same labeling of the product contains the same warnings identified in paragraph (b)(i) of this section except that the words ''or Parkinson's disease'' under ''DO NOT USE WITH'' may be deleted.

(c) Any weight control drug product containing phenylpropanolamine bitartrate, phenylpropanolamine hydrochloride, or phenylpropanolamine maleate as an active ingredient in an oral dosage form for OTC use as described in paragraph (a) of this section is misbranded within the meaning of section 502 of the act unless its labeling bears the following statements under the heading ''WARNINGS:''

(1) ''For use by people 18 years of age and older.''

(2) ''DO NOT TAKE MORE THAN'' (these five words in bold print and capital letters) (insert maximum 75 mg daily dose in a 24-hour period, expressed in units such as capsules or tablets) ''per day (24 hours). Taking more WILL NOT (these two words in bold print and capital letters) increase weight loss and can be harmful.''

(3) ''DO NOT TAKE IF'' (these four words in bold print and capital letters) ''you have heart or thyroid disease, high blood pressure, or an enlarged prostate gland, unless directed by a doctor.'' (Information may be indented and/or preceded by a bullet or other identifying mark.)

(4) ''STOP USING IF'' (these three words in bold print and capital letters) ''you develop nervousness, dizziness, sleeplessness, headache, or palpitations. If symptoms continue, ask a doctor.'' (Information may be indented and/or preceded by a bullet or other identifying mark.)

(5) ''DO NOT USE WITH'' (these four words in bold print and capital letters) (a) ''a monoamine oxidase inhibitor (MAOI) (certain drugs for depression, psychiatric or emotional conditions, or Parkinson's disease), or for 2 weeks after stopping the MAOI drug. If unsure, ask a health professional.'' (b) ''any allergy, asthma, cough-cold, nasal decongestant, or weight control product (containing phenylpropanolamine, phenylephrine, pseudoephedrine, or ephedrine), or any prescription drug, unless directed by a doctor.'' (Statements (a) and (b) under this heading may be indented and/or preceded by a bullet or other identifying mark.)

(d) After (date 6 months after date of publication of the final rule in the Federal Register), any such OTC drug product initially introduced or initially delivered for introduction into interstate commerce, or any such drug product that is repackaged or relabeled after this date regardless of the date the product was manufactured, initially introduced, or initially delivered for introduction into interstate commerce, that is not in compliance with this section is subject to regulatory action.

PART 369—INTERPRETATIVE STATEMENTS RE WARNINGS ON DRUGS AND DEVICES FOR OVER-THE-COUNTER SALE

3. The authority citation for 21 CFR part 369 continues to read as follows:

Authority: Secs. 201, 301, 501, 502, 503, 505, 506, 507, 701 of the Federal Food, Drug,

and Cosmetic Act (21 U.S.C. 321, 331, 351, 352, 353, 355, 356, 357, 371).

§ 369.20 [Amended]

4. Section 369.20 *Drugs; recommended warning and caution statements* is amended by removing the entries for ''NASAL PREPARATIONS: VASOCONSTRICTORS,'' and ''PHENYLPROPANOLAMINE HYDROCHLORIDE PREPARATIONS, ORAL.''

Dated: February 6, 1996.

William K. Hubbard,

Associate Commissioner for Policy Coordination.

[FR Doc. 96–3323 Filed 2–13–96; 8:45 am]

BILLING CODE 4160–01–P

federal register

Wednesday
February 14, 1996

Part IX

Department of Health and Human Services

Food and Drug Administration

21 CFR Part 333

Topical Antimicrobial Drug Products for Over-the-Counter Human Use; Proposed Rule

DEPARTMENT OF HEALTH AND HUMAN SERVICES

Food And Drug Administration

21 CFR Part 333

[Docket No. 95N–0062]

RIN 0910–AA01

Topical Antimicrobial Drug Products For Over-The-Counter Human Use; Proposed Amendment of Final Monograph for OTC First Aid Antibiotic Drug Products

AGENCY: Food and Drug Administration, HHS.

ACTION: Notice of proposed rulemaking.

SUMMARY: The Food and Drug Administration (FDA) is issuing a notice of proposed rulemaking that would amend the final monograph for over-the-counter (OTC) first aid antibiotic drug products (the regulation that establishes conditions under which these drug products are generally recognized as safe and effective and not misbranded). The amendment would add a warning statement concerning allergic reactions resulting from topical antibiotic drug products containing bacitracin, bacitracin zinc, neomycin, neomycin sulfate, polymyxin B, or polymyxin B sulfate. This proposal is part of the ongoing review of OTC drug products conducted by FDA.

DATES: Written comments on the proposed regulation by May 14, 1996; written comments on the agency's economic impact determination by May 14, 1996. FDA is proposing that any final rule based on this proposal become effective 12 months after its date of publication in the Federal Register.

ADDRESSES: Submit written comments to the Dockets Management Branch (HFA–305), Food and Drug Administration, rm. 1–23, 12420 Parklawn Dr., Rockville, MD 20857.

FOR FURTHER INFORMATION CONTACT: William E. Gilbertson, Center for Drug Evaluation and Research (HFD–105),Food and Drug Administration, 5600 Fishers Lane, Rockville, MD 20857, 301–827–2304.

SUPPLEMENTARY INFORMATION:

I. Background

In the Federal Register of December 11, 1987 (52 FR 47312), FDA issued a final monograph for OTC first aid antibiotic drug products in part 333 (21 CFR part 333) subpart B. The monograph provides for single ingredient products containing bacitracin, bacitracin zinc, neomycin, or neomycin sulfate and various combinations containing bacitracin, neomycin sulfate, and polymyxin B sulfate.

FDA has been informed (Ref. 1) that manufacturers of OTC topical antibiotic drug products containing bacitracin zinc, neomycin sulfate, and polymyxin B sulfate voluntarily have added the following information about the possibility of allergic reactions associated with these antibiotics in the warnings for these products: ''Stop use and consult a physician if * * * a rash or other allergic reaction develops. Do not use this product if you are allergic to any of the listed ingredients.'' This allergy warning resulted from an industry task group's review of adverse event reports involving products containing bacitracin zinc, neomycin sulfate, and polymyxin B sulfate. The reports showed that these products have been reported to be associated with hypersensitivity reactions in susceptible individuals and, in rare instances, nonfatal systemic hypersensitivity reactions.

The agency requested that the task group provide these reports for evaluation (Ref. 2), and the industry subsequently submitted them (Ref. 3). The reports included: (1) Listings from FDA's Spontaneous Reporting System (SRS) of adverse experience reports for prescription and OTC drug products containing bacitracin, neomycin, and polymyxin B sulfate, and (2) sublistings of reports of allergic reactions to bacitracin, neomycin, and polymyxin B sulfate in OTC, prescription, unclassified, and all types of products, not just topical first aid antibiotics. The sublistings showed 923 cases of allergic hypersensitivity; 631 related to prescription products, 261 related to OTC products, and 31 that could not be classified from the available information. No deaths attributable to allergic hypersensitivity have been reported from use of any OTC drug products containing these ingredients. Beginning in 1983, the total number of reports of allergic reactions associated with OTC antibiotic drug products containing bacitracin, neomycin, and/or polymyxin B sulfate increased. The industry believed this increase was associated with more OTC topical antibiotic drug products being marketed following publication of the tentative final monograph for these products in 1982. Industry reported that over the past 4 years, the number of units of these products sold per year has been constant at approximately 29 million units per year.

The industry stated that incidence figures cannot be generated from the data because the denominator (total number of exposures) cannot be accurately determined and the numerator may be confounded by over- and/or underreporting of adverse reactions. The industry concluded that reference to the possibility of allergic reactions in the products' label warnings would benefit consumers who use these products.

II. The Agency's Proposal

The agency has reviewed the adverse experience reports and determined that the labeling suggested by the industry would be beneficial to consumers who use these OTC first aid antibiotic drug products. For the OTC drug products, the majority of reports appear to be nonserious skin reactions characterized as either rash or contact dermatitis. No fatalities were reported for OTC drug products; however, the outcome was listed as unknown in the majority of the reports. More than 50 percent of the allergic reactions reported in the SRS involved antibiotic combination products (e.g., containing at least two of the ingredients, bacitracin, polymyxin B sulfate, and/or neomycin). As with all combination products, an adverse effect may be due to one or several of the ingredients in the product. However, the SRS lists allergic (or rash) reports individually for bacitracin and neomycin. The SRS also contains a few such reports for polymyxin B sulfate products singly. In addition, the Physicians' Desk Reference (Ref. 4) lists such allergic reactions for a single-ingredient polymyxin B sulfate powder for parenteral and/or ophthalmic use.

The final monograph for OTC first aid antibiotic drug products, issued on December 11, 1987, did not include an allergy warning for products containing bacitracin, neomycin, and polymyxin B sulfate. Based on the new information provided by industry, showing an increase in the total number of reports of allergic reactions since 1983, the agency is proposing to add a new warning for products containing bacitracin (zinc), neomycin (sulfate), and polymyxin B (sulfate). The warning adds the words ''or if a rash or other allergic reaction develops. Do not use if you are allergic to any of the ingredients.'' in the middle of the existing warning in § 333.150(c)(2) that has been used for all OTC first aid antibiotic drug products for years. The new warning would read:

> Stop use and consult a doctor if the condition persists or gets worse, or if a rash or other allergic reaction develops. Do not use if you are allergic to any of the ingredients. Do not use longer than 1 week unless directed by a doctor.

The agency is including this new warning in proposed § 333.150(c)(3) under the heading *For any product containing bacitracin, bacitracin zinc, neomycin, neomycin sulfate, polymyxin B, and/or polymyxin B sulfate.* The agency is retaining the current warning in § 333.150(c)(2) for products containing chlortetracycline hydrochloride and tetracycline hydrochloride and is adding the heading *For products containing chlortetracycline hydrochloride or tetracycline hydrochloride* to § 333.150(c)(2). Combinations containing oxytetracycline hydrochloride and polymyxin B sulfate in § 333.120(a)(11) and (a)(12) would use the new warning in proposed § 333.150(c)(3).

Manufacturers of OTC topical first aid antibiotic drug products containing bacitracin, bacitracin zinc, neomycin, neomycin sulfate, and/or polymyxin or polymyxin B sulfate are encouraged to voluntarily implement this labeling addition as of the date of publication of this proposal, subject to the possibility that FDA may change the wording of the warning statement as a result of comments filed in response to this proposal. Manufacturers may include this labeling under the heading ''FDA APPROVED INFORMATION'' in accord with § 330.1(c)(2) (21 CFR 330.1(c)(2)) if that heading is used in product labeling. Because FDA is encouraging that the proposed additional warning statement be used on a voluntary basis at this time, the agency advises that manufacturers doing so will be given ample time after publication of a final rule to use up any labeling implemented in conformance with this proposal.

III. References

The following references have been placed on display in the Dockets Management Branch (address above) and may be seen by interested persons between 9 a.m. and 4 p.m., Monday through Friday.

(1) Letter dated June 20, 1992, from R. W. Soller, Nonprescription Drug Manufacturers Association, to W. E. Gilbertson, FDA, in OTC Vol. 190036, Docket No. 95N–0062, Dockets Management Branch.

(2) Letter dated July 22, 1992, from W. E. Gilbertson, FDA, to R. W. Soller, Nonprescription Drug Manufacturers Association, in OTC Vol. 190036, Docket No. 95N–0062, Dockets Management Branch.

(3) Letter dated October 7, 1992, from R. W. Soller, Nonprescription Drug Manufacturers Association, to W. E. Gilbertson, FDA, in OTC Vol. 190036, Docket No. 95N–0062, Dockets Management Branch.

(4) Physicians' Desk Reference, 48th ed., Medical Economics Co., Montvale, NJ, p. 738, 1994.

IV. Analysis of Impacts

FDA has examined the impacts of the proposed rule under Executive Order 12866 and the Regulatory Flexibility Act (Pub. L. 96–354). Executive Order 12866 directs agencies to assess all costs and benefits of available regulatory alternatives and, when regulation is necessary, to select regulatory approaches that maximize net benefits (including potential economic, environmental, public health and safety, and other advantages; distributive impacts; and equity). The agency believes that this proposed rule is consistent with the regulatory philosophy and principles identified in the Executive Order. In addition, the proposed rule is not a significant regulatory action as defined by the Executive Order and, thus, is not subject to review under the Executive Order.

The Regulatory Flexibility Act requires agencies to analyze regulatory options that would minimize any significant impact of a rule on small entities. The proposed rule is estimated to generate a one-time label modification, the cost of which will not be significant. Similarly, the costs incurred by small businesses are estimated to be insufficient to warrant a regulatory flexibility analysis. FDA believes that small marketers use relatively simple and inexpensive packaging and labeling. Hence, labeling change costs (for one warning) to small firms are not expected to be substantial. Accordingly, the agency certifies that the proposed rule will not have a significant economic impact on a substantial number of small entities. Therefore, under the Regulatory Flexibility Act, no further analysis is required.

The agency invites public comment regarding any substantial or significant economic impact that this rulemaking would have on manufacturers of OTC first aid antibiotic drug products that contain bacitracin (zinc), neomycin (sulfate), and/or polymyxin B (sulfate). Comments regarding the impact of this rulemaking on such manufacturers should be accompanied by appropriate documentation. The agency is providing a period of 90 days from the date of publication of this proposed rulemaking in the Federal Register for comments to be developed and submitted. The agency will evaluate any comments and supporting data that are received and will reassess the economic impact of this rulemaking in the preamble to the final rule.

V. Paperwork Reduction Act of 1995

FDA tentatively concludes that the labeling requirement proposed in this document is not subject to review by the Office of Management and Budget because it does not constitute a ''collection of information'' under the Paperwork Reduction Act of 1995 (44 U.S.C. 3501 *et seq.*). Rather, the proposed warning statement is a ''public disclosure of information originally supplied by the Federal government to the recipient for the purpose of disclosure to the public'' (5 CFR 1320.3(c)(2)).

VI. Environmental Impact

The agency has determined under 21 CFR 25.24(c)(6) that this action is of a type that does not individually or cumulatively have a significant effect on the human environment. Therefore, neither an environmental assessment nor an environmental impact statement is required.

Interested persons may, on or before May 14, 1996, submit written comments to the Dockets Management Branch (address above). Written comments on the agency's economic impact determination may be submitted on or before May 14, 1996. Three copies of all comments are to be submitted, except that individuals may submit one copy. Comments are to be identified with the docket number found in brackets in the heading of this document and may be accompanied by a supporting memorandum or brief. Received comments may be seen in the office above between 9 a.m. and 4 p.m., Monday through Friday.

List of Subjects in 21 CFR Part 333

Labeling, Over-the-counter drugs.

Therefore, under the Federal Food, Drug, and Cosmetic Act and under authority delegated to the Commissioner of Food and Drugs, it is proposed that 21 CFR part 333 be amended as follows:

PART 333—TOPICAL ANTIMICROBIAL DRUG PRODUCTS FOR OVER-THE-COUNTER HUMAN USE

1. The authority citation for 21 CFR part 333 continues to read as follows:

Authority: Secs. 201, 501, 502, 503, 505, 510, 701 of the Federal Food, Drug, and Cosmetic Act (21 U.S.C. 321, 351, 352, 353, 355, 360, 371), unless otherwise noted.

2. Section 333.150 is amended by adding a heading to paragraph (c)(2) and by adding new paragraph (c)(3) to read as follows:

§ 333.150 Labeling of first aid antibiotic drug products.

* * * * *

(c) * * *

(2) *For products containing chlortetracycline hydrochloride or tetracycline hydrochloride.* * * *

(3) *For any product containing bacitracin, bacitracin zinc, neomycin, neomycin sulfate, polymyxin B and/or polymyxin B sulfate.* ''Stop use and consult a doctor if the condition persists or gets worse, or if a rash or other allergic reaction develops. Do not use this product if you are allergic to any of the ingredients. Do not use longer than 1 week unless directed by a doctor.''

* * * * *

Dated: February 6, 1996.

William K. Hubbard,

Associate Commissioner for Policy Coordination.

[FR Doc. 96–3325 Filed 2–13–96; 8:45 am]

BILLING CODE 4160–01–F

Reader Aids

Federal Register

Vol. 61, No. 31

Wednesday, February 14, 1996

CUSTOMER SERVICE AND INFORMATION

Federal Register/Code of Federal Regulations

General Information, indexes and other finding aids	**202–523–5227**
Public inspection announcement line	**523–5215**

Laws

Public Laws Update Services (numbers, dates, etc.)	**523–6641**
For additional information	**523–5227**

Presidential Documents

Executive orders and proclamations	**523–5227**
The United States Government Manual	**523–5227**

Other Services

Electronic and on-line services (voice)	**523–4534**
Privacy Act Compilation	**523–3187**
TDD for the hearing impaired	**523–5229**

ELECTRONIC BULLETIN BOARD

Free Electronic Bulletin Board service for Public Law numbers, Federal Register finding aids, and list of documents on public inspection. **202–275–0920**

FAX-ON-DEMAND

You may access our Fax-On-Demand service. You only need a fax machine and there is no charge for the service except for long distance telephone charges the user may incur. The list of documents on public inspection and the daily Federal Register's table of contents are available using this service. The document numbers are 7050-Public Inspection list and 7051-Table of Contents list. The public inspection list will be updated immediately for documents filed on an emergency basis.

NOTE: YOU WILL ONLY GET A LISTING OF DOCUMENTS ON FILE AND NOT THE ACTUAL DOCUMENT. Documents on public inspection may be viewed and copied in our office located at 800 North Capitol Street, N.W., Suite 700. The Fax-On-Demand telephone number is: **301–713–6905**

FEDERAL REGISTER PAGES AND DATES, FEBRUARY

3539–3776 1
3777–4206 2
4207–4348 5
4349–4584 6
4585–4734 7
4735–4848 8
4849–5270 9
5271–5500 12
5501–5668 13
5669–5920 14

CFR PARTS AFFECTED DURING FEBRUARY

At the end of each month, the Office of the Federal Register publishes separately a List of CFR Sections Affected (LSA), which lists parts and sections affected by documents published since the revision date of each title.

1 CFR
Ch. III 3539

3 CFR
Proclamations:
6863 3777
6864 4347
6865 5269
Executive Orders:
12778 (Revoked by EO 12988) 4729
12866 (See EO 12988) 4729
12964 (Amended by EO 12987) 4205
12987 4205
12988 4729
Administrative Orders:
Memorandum:
February 5, 1996 5669
Presidential Determination:
No. 96–9 of January 22, 1996 4207

5 CFR
Ch. XXX 4349
530 3539
531 3539
534 3539
550 3539
575 3539
581 3539
582 3539
630 3539
950 4585
1201 4585
4001 4349
Proposed Rules:
532 4940

7 CFR
Ch. XLII 3779
250 5271
905 3544
944 3544
945 3546
1485 3548
1901 3779
1940 3779
1951 3779
2003 3779
2903 4209
4001 3787
4284 3779
Proposed Rules:
723 5316
920 3604
980 4941
999 3606
1464 5317
1755 4754
1944 4814
1980 3853
4279 3853
4287 3853

8 CFR
Proposed Rules:
212 4374
264 4374
274a 4378

9 CFR
310 4849
Proposed Rules:
1 5524
2 5524
3 5524

10 CFR
170 5064
171 5064
830 4209
835 4209
Proposed Rules:
2 4378
35 4754
50 5318
72 3619
1035 3877
1036 3877

11 CFR
100 ..... 3549, 4302
102 4302
104 3549
105 3549
106 4302
109 ..... 3549, 4302
110 4302
114 ..... 3549, 4302
9034 4849
9038 4849
Proposed Rules:
100 3621
110 3621
114 3621

12 CFR
7 4849
21 4332
31 4849
208 4338
211 4338
225 4338
346 5671
701 ..... 3788, 4213
709 3788
741 3788
1401 4349
Proposed Rules:
701 4238
705 4238
741 4236

14 CFR
1 5171
23 ..... 5130, 5138, 5151, 5171
25 5218
39 ..... 3550, 3792, 3793, 5275, 5277, 5279, 5280, 5281, 5284, 5501, 5675
71 ..... 4587, 4870, 5503, 5504
91 ..... 5151, 5492
97 ..... 3552, 3795, 3796, 3797
Proposed Rules:
Ch. I 4942
39 ..... 3882, 4756, 4943, 5326, 5329, 5331, 5334, 5524
71 ..... 4379, 4380, 4381
73 3884

15 CFR
771.....3555, 5677
776.....5677
799.....3555, 5677
Proposed Rules:
922.....5335

16 CFR
22.....3799
305.....5679
Proposed Rules:
303.....5340
409.....4382

17 CFR
Proposed Rules:
400.....4944
420.....4944

18 CFR
Proposed Rules:
Ch. I.....3799, 4596

19 CFR
4.....3568
132.....3569
148.....3569
Proposed Rules:
351.....4826
353.....4826
354.....4826
355.....4826

20 CFR
Proposed Rules:
404.....4389

21 CFR
80.....3571
173.....4871
189.....4816
331.....4822
510.....4735, 5505
520.....4874, 5505
522.....4874, 5505
524.....5505
558.....4349, 4874
Proposed Rules:
101.....3885, 5349
201.....5912
333.....5918
369.....5912
1220.....4597

22 CFR
9b.....3800
Proposed Rules:
228.....4240

24 CFR
Ch. XI.....5198
Ch. XV.....5198
0.....5198
4.....5198
5.....5198, 5662
8.....5198
12.....5198
15.....5198
16.....5198
17.....5198
27.....5198
28.....5198
30.....5198
35.....5198
40.....5198
51.....5198
52.....5198
86.....4875
91.....5198
92.....5198
100.....5198
103.....5198
104.....5198
107.....5198
109.....5198
110.....5198
111.....5198
125.....5198
135.....5198
146.....5198
200.....5198
201.....5198
203.....5198
206.....5198
213.....5198
215.....5198
219.....5198
220.....5198
221.....5198
231.....5198
232.....5198
234.....5198
235.....5198
236.....5198
237.....5198
248.....5198
260.....5198
261.....5198
265.....5198
280.....5198
290.....4580, 5198
291.....5198
511.....5198
570.....5198
572.....5198
574.....5198
576.....5198
582.....5198
583.....5198
585.....5198
590.....5198
594.....5198
597.....5198
700.....5198
750.....5198
760.....5198
791.....5198
792.....5198
799.....5198
811.....5198
812.....5662
813.....5198
850.....5198
880.....5198
881.....5198
882.....5198, 5850
883.....5198
884.....5198
885.....5198
886.....5198
887.....5198
889.....5198
890.....5198
899.....5198
901.....5198
904.....5198
912.....5662
913.....5198
941.....5198
942.....5198
945.....5198
950.....5662
960.....5198
961.....5198
962.....5198
963.....5198
964.....5198
965.....5198
968.....5198
982.....5662
999.....5198
3280.....5198
3282.....5198

25 CFR
Proposed Rules:
Ch. VI.....3623

26 CFR
1.....4349, 4876
602.....4876

28 CFR
2.....4350
Proposed Rules:
35.....4389
540.....5846

29 CFR
1910.....5507
1915.....5507
1917.....5507
1918.....5507
1919.....5507
1926.....5507
1928.....5507
Proposed Rules:
Ch. XIV.....3624
103.....4246
1904.....4030
1952.....4030

30 CFR
202.....5448
206.....3800, 5448
260.....3800
Proposed Rules:
Ch. II.....4390
931.....3625
943.....3628

31 CFR
103.....4326
351.....5510
595.....3805

32 CFR
290.....4885, 5510
311.....3813
321.....3814
835.....4351
838.....4351
843.....4351
848.....4352
Proposed Rules:
838.....4390

33 CFR
100.....4885, 5680
117.....4886
Proposed Rules:
165.....4945

34 CFR
668.....3776
690.....3776
Proposed Rules:
Ch. VI.....4198
201.....3772
361.....4390
646.....4758

36 CFR
223.....5684
242.....5685
1206.....5656
1210.....5660
Proposed Rules:
7.....5354
17.....5356
1190.....5723
1191.....5723

37 CFR
202.....5445

38 CFR
Proposed Rules:
21.....5357

40 CFR
51.....4588
52.....3572, 3575, 3578, 3579, 3581, 3582, 3584, 3586, 3588, 3589, 3591, 3815, 3817, 3819, 3821, 3824, 4215, 4216, 4217, 4352, 4353, 4887, 4890, 4892, 4895, 4897, 4899, 4901, 5285, 5288, 5291, 5295, 5297, 5299, 5303, 5306, 5307, 5511, 5514, 5515, 5689, 5690, 5694, 5696, 5699, 5701, 5704
63.....4902
70.....3827, 4217, 4220, 5705
80.....3832
81.....3591, 4357, 5707
82.....4736
85.....5840
180.....4591, 4592, 4593, 5711, 5712, 5714, 5716
194.....5224
262.....4903
264.....4903
265.....4903
270.....4903
271.....4742, 5718
281.....3591, 3599
282.....4224
300.....4747
Proposed Rules:
52.....3631, 3632, 3633, 3634, 3635, 3891, 3892, 4246, 4391, 4392, 4598, 4946, 4947, 4948, 4949, 5358, 5359, 5360, 5362, 5263, 5526, 5527, 5723, 5724, 5725
70.....3893, 4248
76.....3893
80.....3894
81.....3635, 4392, 5363
89.....4600
90.....4600
91.....4600
180.....4621, 4623, 5726, 5728
261.....5528
268.....4758
271.....4758, 5528
302.....4758, 5528
440.....5364

41 CFR
302–11.....3838
Proposed Rules:
60-741.....5902

42 CFR
Proposed Rules:
100.....4249

43 CFR
3100.....4748
4100.....4227
Public Land Orders:
3689 (Revoked in part by PLO 7182).....4359
7183.....4752
7184.....5719

44 CFR
10.....4227
Proposed Rules:
62.....3635

46 CFR
Ch. III.....5720
150.....5518
401.....5720
402.....5720
514.....5308
Proposed Rule:
108.....4132
110.....4132
111.....4132
112.....4132
113.....4132
161.....4132

47 CFR
0.....4359, 4916
1.....4359, 4916
15.....3600
17.....4359
21.....4359

22 4359
23 4359
24 4359
25 4359
43 4918
63 4937
73 ....4232, 4233, 4234, 4359, 5721, 5722
74 4359
78 4359
80 4359
87 4359
90 ....3600, 3841, 4234, 4359
94 4359
95 4359
97 4359

Proposed Rules:

20 3644
61 3644
69 3644
73 ....4392, 4393, 4950
76 3657

48 CFR

228 3600
252 3600
1403 5519
1425 5519
1452 5519
1815 5312
1816 5312
1819 5312
1823 5312
1827 5312
1835 5312
1837 5312
1852 5312
3509 3846
9904 5520

Proposed Rules:

Ch. 53 4393
909 3877

49 CFR

199 5722
251 4937
258 4937
531 4369
571 ....4370, 4938

Proposed Rules:

525 4249
541 4249
555 4249
571 ....4249, 4624, 5370, 5730
575 5730
581 4249

50 CFR

14 3849
17 4372
100 5685
229 3851
611 ....4304, 4311
620 3602
672 ....3602, 4304, 4594, 5608
675 ....4311, 5608
676 ....4304, 4311

Proposed Rules:

17 ....4394, 4401
23 3894
285 3666
424 4710
641 4950

REMINDERS

The rules and proposed rules in this list were editorially compiled as an aid to Federal Register users. Inclusion or exclusion from this list has no legal significance.

RULES GOING INTO EFFECT TODAY

COMMERCE DEPARTMENT

Export Administration Bureau

Export licensing:

Semiconductor manufacturing equipment, General License GFW expansion; and computer export control reform; correction; published 2-14-96

ENVIRONMENTAL PROTECTION AGENCY

Air quality implementation plans; approval and promulgation; various States:

Washington and Alaska; published 2-14-96

Pesticides; tolerances in food, animal feeds, and raw agricultural commodities:

Imidacloprid; published 2-14-96

Octadecanoic acid, 12-hydroxy-, homopolymer, octadecanoate; published 2-14-96

Pelargonic acid; published 2-14-96

INTERIOR DEPARTMENT

Land Management Bureau

Public land orders:

Oregon; published 2-14-96

TRANSPORTATION DEPARTMENT

Coast Guard

Organization, functions, and authority delegations:

Great Lakes pilotage regulations; responsibility transferred to Saint Lawrence Seaway Development Corporation; published 2-14-96

Regattas and marine parades:

Great Lakes Annual Marine Events; published 2-14-96

TRANSPORTATION DEPARTMENT

Saint Lawrence Seaway Development Corporation

Organization, functions, and authority delegations:

Great Lakes pilotage regulations; responsibility transferred from Coast Guard; published 2-14-96

COMMENTS DUE NEXT WEEK

AGRICULTURE DEPARTMENT

Agricultural Marketing Service

Spearmint oil produced in Far West; comments due by 2-23-96; published 1-24-96

AGRICULTURE DEPARTMENT

Animal and Plant Health Inspection Service

Exportation and importation of animals and animal products:

Horses from contagious equine metritis-affected countries; States authorized to receive; comments due by 2-22-96; published 1-23-96

CONSUMER PRODUCT SAFETY COMMISSION

Bicycle helmet safety standards; comments due by 2-19-96; published 12-6-95

DEFENSE DEPARTMENT

Federal Acquisition Regulation (FAR):

Allowable cost and payment clause; comments due by 2-20-96; published 12-21-95

Contractors' purchasing systems reviews; comments due by 2-20-96; published 12-21-95

EDUCATION DEPARTMENT

Postsecondary education:

Student support services program; comment period extension; comments due by 2-20-96; published 2-8-96

Special education and rehabilitative services:

State vocational rehabilitation services program; comments due by 2-23-96; published 12-15-95

State vocational rehabilitation services program--

Meetings; comments due by 2-23-96; published 2-6-96

ENVIRONMENTAL PROTECTION AGENCY

Air programs:

Fuel and fuel additives--

Prohibition on gasoline containing lead or lead additives for highway use; comments due by 2-20-96; published 2-2-96

Air quality implementation plans; approval and promulgation; various States:

California; comments due by 2-22-96; published 1-23-96

Delaware; comments due by 2-23-96; published 1-24-96

Ohio; comments due by 2-22-96; published 1-23-96

Virginia; comments due by 2-23-96; published 1-24-96

Hazardous waste:

Hazardous waste management system, identification and listing--

Petroleum refining process wastes; land disposal restrictions; comments due by 2-20-96; published 11-20-95

Identification and listing--

Constituent-specific exit levels for low-risk solid wastes; comments due by 2-20-96; published 12-21-95

Pesticides; tolerances in food, animal feeds, and raw agricultural commodities:

Chlorothalonil; comments due by 2-23-96; published 1-24-96

FEDERAL RESERVE SYSTEM

Conflict of interests; comments due by 2-20-96; published 12-19-95

Reimbursement for providing financial records (Regulation S):

Recordkeeping requirements for certain financial records; comments due by 2-20-96; published 12-20-95

GENERAL SERVICES ADMINISTRATION

Federal Acquisition Regulation (FAR):

Allowable cost and payment clause; comments due by 2-20-96; published 12-21-95

Contractors' purchasing systems reviews; comments due by 2-20-96; published 12-21-95

HEALTH AND HUMAN SERVICES DEPARTMENT

Food and Drug Administration

Food additives:

Adjuvants, production aids, and sanitizers--

2-[[2,4,8,10-tetrakis(1, 1-dimethylethyl)dibenzo [d,f][1,3,2], etc.; comments due by 2-23-96; published 1-24-96

Disodium decanedioate; comments due by 2-23-96; published 1-24-96

Tri[2(or 4)-C9-10-branched alkylphenyl] phosphorothioate; comments due by 2-22-96; published 1-23-96

INTERIOR DEPARTMENT

Surface Mining Reclamation and Enforcement Office

Permanent program and abandoned mine land reclamation plan submissions:

Indiana; comments due by 2-21-96; published 1-22-96

NATIONAL AERONAUTICS AND SPACE ADMINISTRATION

Federal Acquisition Regulation (FAR):

Allowable cost and payment clause; comments due by 2-20-96; published 12-21-95

Contractors' purchasing systems reviews; comments due by 2-20-96; published 12-21-95

PERSONNEL MANAGEMENT OFFICE

Employment:

Suitability, national security positions, and personnel investigations; comments due by 2-20-96; published 1-5-96

RAILROAD RETIREMENT BOARD

Railroad Retirement Act:

Retirement annuities; finality of decisions; comments due by 2-20-96; published 12-21-95

SECURITIES AND EXCHANGE COMMISSION

Investment companies:

Registered open-end management investment companies; shares distribution; comments due by 2-22-96; published 1-19-96

TRANSPORTATION DEPARTMENT

Coast Guard

Drawbridge operations:

New Jersey; comments due by 2-20-96; published 12-20-95

Federal regulatory review:

Industry standards; miscellaneous amendments; comments due by 2-20-96; published 12-20-95

TRANSPORTATION DEPARTMENT

Federal Aviation Administration

Airworthiness directives:

Aerospatiale; comments due by 2-20-96; published 1-11-96

Airbus; comments due by 2-20-96; published 1-11-96

Airbus Industrie; comments due by 2-21-96; published 1-19-96

Bracket Aircraft Co., Inc.; comments due by 2-20-96; published 12-18-95

Fokker; comments due by 2-21-96; published 1-19-96

New Piper Aircraft, Inc.; comments due by 2-21-96; published 12-7-95

Saab; comments due by 2-20-96; published 1-9-96

Sikorsky; comments due by 2-20-96; published 12-20-95

TRANSPORTATION DEPARTMENT

National Highway Traffic Safety Administration

Fuel economy standards:

Light trucks--

1998 model year; correction; comments due by 2-20-96; published 1-25-96

TRANSPORTATION DEPARTMENT

Research and Special Programs Administration

Hazardous materials:

Hazardous materials transportation--

Miscellaneous amendments; comments due by 2-22-96; published 12-19-95

TREASURY DEPARTMENT

Alcohol, Tobacco and Firearms Bureau

Alcohol; viticultural area designations:

Malibu-Newton Canyon, CA; comments due by 2-20-96; published 12-22-95

Alcoholic beverages:

Wine; labeling proceedings--

Certificates of label approval, exemption from label approval, and distinctive liquor bottle approvals; comments due by 2-21-96; published 1-22-96

TREASURY DEPARTMENT

Comptroller of the Currency

Investment securities; Federal regulatory review; comments due by 2-20-96; published 12-21-95

Practice and procedure:

National banks; fiduciary activities; comments due by 2-20-96; published 12-21-95

Securities transactions; recordkeeping and confirmation requirements; comments due by 2-20-96; published 12-22-95

TREASURY DEPARTMENT

Internal Revenue Service

Income taxes:

S corporations and their shareholders--

Treatment of gain from disposition of interest in certain natural resource recapture property; comments due by 2-20-96; published 12-21-95

LIST OF PUBLIC LAWS

This is a list of public bills from the 104th Congress which have become Federal laws. It may be used in conjunction with ''P L U S'' (Public Laws Update Service) on 202–523–6641. The text of laws is not published in the **Federal Register** but may be ordered in individual pamphlet form (referred to as ''slip laws'') from the Superintendent of Documents, U.S. Government Printing Office, Washington, DC 20402 (phone, 202–512–2470).

H.R. 1868/P.L. 104–107

Foreign Operations, Export Financing, and Related Programs Appropriations Act, 1996 (Feb. 12, 1996; 110 Stat. 704)

H.R. 2111/P.L. 104–108

To designate the Federal building located at 1221 Nevin Avenue in Richmond, California, as the ''Frank Hagel Federal Building''. (Feb. 12, 1996; 110 Stat. 762)

H.R. 2726/P.L. 104–109

To make certain technical corrections in laws relating to Native Americans, and for other purposes. (Feb. 12, 1996; 110 Stat. 763)

Last List February 13, 1996