3–28–96
Vol. 61 No. 61
Pages 13645–14012

federal register

Thursday
March 28, 1996

Briefings on How To Use the Federal Register
For information on briefings in Washington, DC and Raleigh, NC, see announcement on the inside cover of this issue.

FEDERAL REGISTER Published daily, Monday through Friday, (not published on Saturdays, Sundays, or on official holidays), by the Office of the Federal Register, National Archives and Records Administration, Washington, DC 20408, under the Federal Register Act (49 Stat. 500, as amended; 44 U.S.C. Ch. 15) and the regulations of the Administrative Committee of the Federal Register (1 CFR Ch. I). Distribution is made only by the Superintendent of Documents, U.S. Government Printing Office, Washington, DC 20402.

The Federal Register provides a uniform system for making available to the public regulations and legal notices issued by Federal agencies. These include Presidential proclamations and Executive Orders and Federal agency documents having general applicability and legal effect, documents required to be published by act of Congress and other Federal agency documents of public interest. Documents are on file for public inspection in the Office of the Federal Register the day before they are published, unless earlier filing is requested by the issuing agency.

The seal of the National Archives and Records Administration authenticates this issue of the Federal Register as the official serial publication established under the Federal Register Act. 44 U.S.C. 1507 provides that the contents of the Federal Register shall be judicially noticed.

The Federal Register is published in paper, 24x microfiche and as an online database through *GPO Access*, a service of the U.S. Government Printing Office. The online database is updated by 6 a.m. each day the Federal Register is published. The database includes both text and graphics from Volume 59, Number 1 (January 2, 1994) forward. Free public access is available on a Wide Area Information Server (WAIS) through the Internet and via asynchronous dial-in. Internet users can access the database by using the World Wide Web; the Superintendent of Documents home page address is http://www.access.gpo.gov/su__docs/, by using local WAIS client software, or by telnet to swais.access.gpo.gov, then login as guest, (no password required). Dial-in users should use communications software and modem to call (202) 512–1661; type swais, then login as guest (no password required). For general information about *GPO Access*, contact the *GPO Access* User Support Team by sending Internet e-mail to help@eids05.eids gpo.gov; by faxing to (202) 512–1262; or by calling (202) 512–1530 between 7 a.m. and 5 p.m. Eastern time, Monday–Friday, except for Federal holidays.

The annual subscription price for the Federal Register paper edition is $494, or $544 for a combined Federal Register, Federal Register Index and List of CFR Sections Affected (LSA) subscription; the microfiche edition of the Federal Register including the Federal Register Index and LSA is $433. Six month subscriptions are available for one-half the annual rate. The charge for individual copies in paper form is $8.00 for each issue, or $8.00 for each group of pages as actually bound; or $1.50 for each issue in microfiche form. All prices include regular domestic postage and handling. International customers please add 25% for foreign handling. Remit check or money order, made payable to the Superintendent of Documents, or charge to your GPO Deposit Account, VISA or MasterCard. Mail to: New Orders, Superintendent of Documents, P.O. Box 371954, Pittsburgh, PA 15250–7954.

There are no restrictions on the republication of material appearing in the Federal Register.

How To Cite This Publication: Use the volume number and the page number. Example: 61 FR 12345.

SUBSCRIPTIONS AND COPIES

PUBLIC	
Subscriptions:	
Paper or fiche	202–512–1800
Assistance with public subscriptions	512–1806
General online information	202–512–1530
Single copies/back copies:	
Paper or fiche	512–1800
Assistance with public single copies	512–1803
FEDERAL AGENCIES	
Subscriptions:	
Paper or fiche	523–5243
Assistance with Federal agency subscriptions	523–5243

For other telephone numbers, see the Reader Aids section at the end of this issue.

FEDERAL REGISTER WORKSHOP

THE FEDERAL REGISTER: WHAT IT IS AND HOW TO USE IT

FOR: Any person who uses the Federal Register and Code of Federal Regulations.

WHO: Sponsored by the Office of the Federal Register.

WHAT: Free public briefings (approximately 3 hours) to present:

1. The regulatory process, with a focus on the Federal Register system and the public's role in the development of regulations.
2. The relationship between the Federal Register and Code of Federal Regulations.
3. The important elements of typical Federal Register documents.
4. An introduction to the finding aids of the FR/CFR system.

WHY: To provide the public with access to information necessary to research Federal agency regulations which directly affect them. There will be no discussion of specific agency regulations.

WASHINGTON, DC

WHEN: April 23, 1996 at 9:00 am

WHERE: Office of the Federal Register Conference Room, 800 North Capitol Street, NW., Washington, DC (3 blocks north of Union Station Metro)

RESERVATIONS: 202–523–4538

RALEIGH, NC

WHEN: April 16, 1996 at 9:00 am

WHERE: Federal Building and U.S. Courthouse, Room 209, 310 New Bern Avenue, Raleigh, NC 27601

RESERVATIONS: 1–800–688–9889

Printed on recycled paper containing 100% post consumer waste

Contents

Federal Register
Vol. 61, No. 61
Thursday, March 28, 1996

Agriculture Department
See Animal and Plant Health Inspection Service
NOTICES
Agency information collection activities:
Submission for OMB review; comment request, 13813

Animal and Plant Health Inspection Service
RULES
Plant-related quarantine, domestic:
Karnal bunt in Arizona, New Mexico, and Texas, 13649–13655

Architectural and Transportation Barriers Compliance Board
NOTICES
Committees; establishment, renewal, termination, etc.:
Telecommunications Access Advisory Committee, 13813–13814

Arts and Humanities, National Foundation
See National Foundation on the Arts and the Humanities

Civil Rights Commission
NOTICES
Meetings; State advisory committees:
Florida, 13852
Indiana, 13852
Kentucky, 13852–13853
Pennsylvania, 13853
Vermont, 13853

Coast Guard
RULES
Boating safety:
Inflatable personal floatation devices for recreational boaters; approval procedures, 13924–13931
Lifesaving equipment:
Recreational inflatable personal flotation device standards, 13931–13947
PROPOSED RULES
Merchant marine officers and seamen:
Electronic records of shipping articles and certificates of discharge, 13796–13803

Commerce Department
See International Trade Administration
See National Oceanic and Atmospheric Administration

Consumer Product Safety Commission
NOTICES
Meetings; Sunshine Act, 13853

Defense Department
See Navy Department
NOTICES
Committees; establishment, renewal, termination, etc.:
Marshall Center Board of Visitors, 13853–13854
Meetings:
Government-Industry Advisory Committee, 13854

Drug Enforcement Administration
RULES
Chemical exports from U.S. to Colombia; policy statement, 13759–13760
Schedules of controlled substances:
Exempt chemical preparations, 13689–13759
NOTICES
Applications, hearings, determinations, etc.:
Karpo, Stanley, D.P.M., 13876–13878
Richards, John Porter, D.O., 13878–13880

Education Department
PROPOSED RULES
Postsecondary education:
Foreign language and area studies fellowships program, 13996–14003
Modern foreign language training and area studies, etc., 14006–14011

Energy Department
See Federal Energy Regulatory Commission

Environmental Protection Agency
RULES
Air quality implementation plans; approval and promulgation; various States:
Missouri, 13776–13777
Hazardous waste program authorizations:
Louisiana, 13777–13782
PROPOSED RULES
Superfund program:
National oil and hazardous substances contingency plan—
National priorities list update, 13794–13796
Water pollution control:
Ocean dumping; bioassay testing requirements, 13794
NOTICES
Clean Air Act:
Citizens suits; proposed settlements—
American Petroleum Institute et al., 13858
Sierra Club Legal Defense Fund, 13858–13859
Meetings:
Environmental Policy and Technology National Advisory Council, 13859
Mobile Sources Technical Advisory Committee, 13859

Equal Employment Opportunity Commission
PROPOSED RULES
Unsupervised Waivers of Rights and Claims under Age Discrimination in Employment Act Regulatory Guidance Negotiated Rulemaking Advisory Committee:
Meetings, 13794

Executive Office of the President
See Presidential Documents

Federal Aviation Administration
RULES
Airworthiness directives:
Societe Nationale Industrielle Aerospatiale et al., 13655–13659

PROPOSED RULES
Airworthiness directives:
Airbus, 13789–13791
de Havilland, 13785–13787
Fokker, 13791–13792
McDonnell Douglas, 13787–13789

Federal Communications Commission
PROPOSED RULES
Television broadcasting:
Cable television systems—
Telecommunications Act; cable operation equipment costs; aggregation, 13803–13809

Federal Deposit Insurance Corporation
NOTICES
Coastal Barrier Improvement Act; property availability:
Bryant Road Property, MA, 13859–13860
Malden Street Property, MA, 13860

Federal Emergency Management Agency
NOTICES
Disaster and emergency areas:
Texas, 13860

Federal Energy Regulatory Commission
NOTICES
Natural gas certificate filings:
Questar Pipeline Co. et al., 13856–13857
Natural gas pipelines; alternatives to traditional cost-of-service ratemaking criteria, 13857
Applications, hearings, determinations, etc.:
Kentucky Utilities Co., 13854
KO Transmission Co., 13854–13855
Southern Natural Gas Co., 13855
Transcontinental Gas Pipe Line Corp., 13855
Williams Natural Gas Co., 13855
Wisconsin Electric Power Co., 13855–13856

Federal Highway Administration
NOTICES
Environmental statements; notice of intent:
Pitkin County, CO, 13917–13918

Federal Maritime Commission
NOTICES
Freight forwarder licenses:
Whitte, Deborah S., et al., 13861

Federal Railroad Administration
NOTICES
Traffic control systems; discontinuance and removal:
Central Oregon & Pacific Railroad, 13918

Federal Trade Commission
RULES
Antitrust Improvements Act:
Mergers and acquisitions; premerger notification; reporting and waiting period requirements, 13666–13689
Trade regulation rules:
Home insulation; labeling and advertising, 13659–13666

Fish and Wildlife Service
NOTICES
Endangered and threatened species permit applications, 13865
Meetings:
Klamath River Basin Fisheries Task Force, 13866

Food and Drug Administration
PROPOSED RULES
Biological product licenses:
Well-characterized biotechnology products—
Approved application changes reporting; meeting, 13793

Health and Human Services Department
See Food and Drug Administration
See Health Resources and Services Administration
See National Institutes of Health

Health Resources and Services Administration
NOTICES
Grants and cooperative agreements; availability, etc.:
National Health Service Corps loan repayment program and State loan repayment programs, 13861–13864

Housing and Urban Development Department
RULES
Federal regulatory review:
Low income housing—
Drug elimination program requirements; consolidation, 13986–13993
NOTICES
Grants and cooperative agreements; availability, etc.:
Early childhood development program, 13950–13954

Interior Department
See Fish and Wildlife Service
See Land Management Bureau
See Minerals Management Service

Internal Revenue Service
RULES
Income taxes:
Consolidated groups—
Intercompany temporary transactions and related rules; correction, 13762
Procedure and administration:
Internal revenue tax and stamp payments by check or money order; financial institution unpaid tax liability; correction, 13762–13763
NOTICES
Agency information collection activities:
Proposed collection; comment request, 13919
Inflation adjustment factor and reference prices:
Fuel credit, nonconventional sources, 13919
Taxable substances, imported:
Butyl benzyl phthalate, 13919–13920

International Trade Administration
NOTICES
Antidumping:
Color television receivers, except for video monitors, from—
Taiwan, 13814–13815
Corrosion-resistant carbon steel flat products and cut-to-length carbon steel plate from—
Canada, 13815–13834
Cut-to-length carbon steel plate from—
Germany, 13834–13846
Cheese quota; foreign government subsidies:
Quarterly update, 13846–13847
Countervailing duty orders:
Intent to revoke, 13847

International Trade Commission
NOTICES
Import investigations:
Fresh tomatoes and bell peppers, 13875–13876
Global positioning system coarse acquisition code receivers and products containing same, 13876

Justice Department
See Drug Enforcement Administration
See Parole Commission
RULES
Antitrust Procedures and Penalties Act:
Procedures for receipt and consideration of written comments; CFR section removed, 13763–13764

Labor Department
See Mine Safety and Health Administration
NOTICES
Agency information collection activities:
Proposed collection; comment request, 13880–13881
Submission for OMB review; comment request, 13881

Land Management Bureau
NOTICES
Agency information collection activities:
Proposed collection; comment request, 13866–13870
Environmental statements; availability, etc.:
California Desert Conservation Area, CA; open pit, heap leach gold mine, 13870
Management framework plans, etc.:
Oregon, 13870–13871
Meetings:
John Day-Snake Resource Advisory Council, 13871
Resource advisory councils—
Southwest Colorado, 13871–13872
Resource management plans, etc.:
Bishop Resource Area, CA, 13872
Klamath Falls Resource Area, OR, 13872–13874
Survey plat filings:
Colorado, 13874
Withdrawal and reservation of lands:
Nevada; correction, 13874

Minerals Management Service
NOTICES
Meetings:
Minerals Management Advisory Board, 13874–13875

Mine Safety and Health Administration
NOTICES
Safety standard petitions:
Energy West Mining Co. et al., 13881–13883

National Aeronautics and Space Administration
NOTICES
Patent licenses; non-exclusive, exclusive, or partially exclusive:
SR Technology, Inc., 13884

National Foundation on the Arts and the Humanities
NOTICES
Meetings:
Music Advisory Panel, 13884

National Institutes of Health
NOTICES
Meetings:
National Institute of Dental Research, 13864
National Institute of Environmental Health Sciences, 13864–13865
Research Grants Division special emphasis panels, 13865

National Labor Relations Board
RULES
Freedom of Information Act; implementation, 13764–13765
NOTICES
Privacy Act:
Systems of records, 13884–13885

National Oceanic and Atmospheric Administration
RULES
Fishery conservation and management:
North Pacific fisheries research plan; implementation, 13782–13784
PROPOSED RULES
Fishery conservation and management:
Atlantic bluefish, 13810–13811
Atlantic striped bass and weakfish, 13811–13812
NOTICES
Marine mammals:
Incidental taking; authorization letters, etc.—
Massachusetts Institute of Technology, Department of Engineering, 13847–13851
Meetings:
Western Pacific Fishery Management Council, 13851–13852

National Science Foundation
NOTICES
Committees; establishment, renewal, termination, etc.:
Science and Technology Centers Program Advisory Committee, 13885
Meetings:
Biochemistry and Molecular Structure and Function Advisory Panel, 13885
Biological Sciences Special Emphasis Panel, 13885
Chemistry Special Emphasis Panel, 13885–13886
Cross Disciplinary Activities Special Emphasis Panel, 13886
Design, Manufacturing and Industrial Innovation Special Emphasis Panel, 13886
Developmental Mechanisms Advisory Panel, 13886
Earth Sciences Proposal Review Panel, 13886
Engineering Advisory Committee, 13887
Materials Research Special Emphasis Panel, 13887
Neuroscience Advisory Panel, 13887
Presidential Faculty Fellows Advisory Panel, 13887
Research, Evaluation and Communication Special Emphasis Panel, 13887–13888

Navy Department
NOTICES
Meetings:
Chief of Naval Operations Executive Panel, 13854
Patent licenses; non-exclusive, exclusive, or partially exclusive:
Lumitox Gulf L.C., 13854

Nuclear Regulatory Commission
RULES
Practice rules:
Domestic licensing proceedings—
Enforcement actions policy and procedure; removal; correction, 13655
NOTICES
Enforcement actions policy and procedure; comment request; correction, 13890

Environmental statements; availability, etc.:
Rochester Gas & Electric Corp., 13891–13892
Applications, hearings, determinations, etc.:
Florida Power Corp., 13888–13890

Pacific Northwest Electric Power and Conservation Planning Council
NOTICES
Power plan amendments:
Northwest conservation and electric power plan, 13892–13893

Parole Commission
RULES
Federal prisoners; paroling and releasing, etc.:
Original jurisdiction cases; voting quorum requirement, 13763

Postal Service
RULES
International Mail Manual:
Global Priority Mail—
Implementation, 13775–13776
International package consignment service implementation, 13765–13775

Presidential Documents
EXECUTIVE ORDERS
Government agencies and employees:
Federal Acquisition, Recycling, and Waste Prevention; amendment (EO 12995), 13645
Wildlife Refuge System, National; management and general public use (EO 12996), 13647–13648

Public Health Service
See Food and Drug Administration
See Health Resources and Services Administration
See National Institutes of Health

Research and Special Programs Administration
NOTICES
Agency information collection activities:
Proposed collection; comment request, 13918

Securities and Exchange Commission
RULES
Practice and procedure:
Administrative proceedings; evidentiary hearings before administrative law judges, etc.; correction, 13689
Securities and investment companies:
Risk-limiting conditions imposed on tax exempt money market funds, 13956–13984
NOTICES
Agency information collection activities:
Proposed collection; comment request, 13893
Submission for OMB review; comment request, 13893–13894
Securities:
Senior citizens and qualified retirement plans; protection against fraud; study and report, 13906–13907
Self-regulatory organizations; proposed rule changes:
Chicago Board Options Exchange, Inc., 13907–13908
International Securities Clearing Corp., 13908–13909
National Association of Securities Dealers, Inc., 13909–13912
National Securities Clearing Corp., 13912–13913
Philadelphia Stock Exchange, Inc., 13913–13917
Applications, hearings, determinations, etc.:
Air-Cure Technologies, Inc., 13894
Connecticut Mutual Investment Accounts, Inc., et al., 13894–13896
Dreyfus Massachusetts Municipal Money Market Fund et al., 13896–13898
GNA Variable Investment Account et al., 13898–13901
Public utility holding company filings, 13901–13903
U.S. Trust Corp. et al., 13903–13906

Selective Service System
NOTICES
Agency information collection activities:
Submission for OMB review; comment request, 13917

Small Business Administration
NOTICES
Meetings; district and regional advisory councils:
Utah, 13917

Transportation Department
See Coast Guard
See Federal Aviation Administration
See Federal Highway Administration
See Federal Railroad Administration
See Research and Special Programs Administration
PROPOSED RULES
Omnibus Transportation Employee Testing Act of 1991:
Drug and alcohol testing requirements for foreign-based drivers operating in U.S.; participation by Canadian and Mexican laboratories, 13809–13810
NOTICES
Secretarial determinations:
Hellenikon International Airport, Athens, Greece; notification of ineffective security measures, 13917

Treasury Department
See Internal Revenue Service

United States Information Agency
RULES
Exchange visitor program:
Summer travel programs, 13760–13762
NOTICES
Grants and cooperative agreements; availability, etc.:
Community connections; community-based, professional programs for entrepreneurs, legal professionals and government officials from Ukraine and Moldova, 13920–13922

Separate Parts In This Issue

Part II
Department of Transportation, Coast Guard, 13924–13947

Part III
Department of Housing and Urban Development, 13950–13954

Part IV
Securities Exchange Commission, 13956–13984

Part V
Department of Housing and Urban Development, 13986–13993

Part VI
Department of Education, 13996–14003

Part VII
Department of Education, 14006–14011

Reader Aids
Additional information, including a list of public laws, telephone numbers, reminders, and finding aids, appears in the Reader Aids section at the end of this issue.

Electronic Bulletin Board
Free Electronic Bulletin Board service for Public Law numbers, Federal Register finding aids, and a list of documents on public inspection is available on 202–275–1538 or 275–0920.

CFR PARTS AFFECTED IN THIS ISSUE

A cumulative list of the parts affected this month can be found in the Reader Aids section at the end of this issue.

3 CFR
Executive Orders:
12873 (Amended by EO 12995).....13645
12995.....13645
12996.....13647

7 CFR
301.....13649

10 CFR
2.....13655

14 CFR
39.....13655
Proposed Rules:
39 (4 documents) 13785, 13787, 13789, 13791

16 CFR
460.....13659
801.....13666
802.....13666

17 CFR
200.....13689
230.....13956
239.....13956
270.....13956
274.....13956

21 CFR
1308.....13689
1313.....13759
Proposed Rules:
314.....13793
600.....13793
601.....13793

22 CFR
514.....13760

24 CFR
261.....13986
761.....13986
961.....13986

26 CFR
1.....13762
301.....13762

28 CFR
2.....13763
50.....13763

29 CFR
102.....13764
Proposed Rules:
Ch. XIV 13794

33 CFR
175.....13924
179.....13924
181.....13924

34 CFR
Proposed Rules:
656.....13996
657.....14006

39 CFR
20 (2 documents) 13765, 13775

40 CFR
52.....13776
271.....13777
Proposed Rules:
220.....13794
227.....13794
300.....13794

46 CFR
2.....13924
159.....13924
160 (2 documents) 13924, 13931
Proposed Rules:
14.....13796

47 CFR
Proposed Rules:
76.....13803

49 CFR
Proposed Rules:
40.....13809

50 CFR
677.....13782
Proposed Rules:
628.....13810
656.....13811
697.....13811

Federal Register
Vol. 61, No. 61
Thursday, March 28, 1996

Presidential Documents

Title 3—

The President

Executive Order 12995 of March 25, 1996

Amendment to Executive Order No. 12873

By the authority vested in me as President by the Constitution and the laws of the United States of America, and in order to assist paper mills in their procurement of recovered materials to use as raw materials, it is hereby ordered that Executive Order No. 12873 is amended as follows:

Section 1. Section 504(a) of Executive Order No. 12873 shall read: ''(a) For high speed copier paper, offset paper, forms bond, computer printout paper, carbonless paper, file folders, white woven envelopes and for other uncoated printing and writing paper, such as writing and office paper, book paper, cotton fiber paper, and cover stock, the minimum content standard shall be no less than 20 percent postconsumer materials beginning December 31, 1994. This minimum content standard shall be increased to 30 percent beginning on December 31, 1998.''

Sec. 2. Section 504(b) of Executive Order No. 12873 shall be deleted and section 504(c) of that order shall be redesignated as section 504(b) and shall read: ''(b) As an alternative to meeting the standards in section 504(a), for all printing and writing papers, the minimum content standard shall be no less than 50 percent recovered materials that are a waste material byproduct of a finished product other than a paper or textile product which would otherwise be disposed of in a landfill, as determined by the State in which the facility is located.''

Sec. 3. The last sentence of section 301(a) of Executive Order No. 12873 shall read ''In carrying out his or her functions, the Federal Environmental Executive shall consult with the Chairman of the Council on Environmental Quality.''

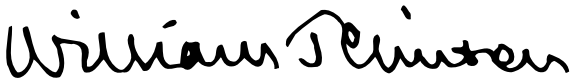

THE WHITE HOUSE,
March 25, 1996.

[FR Doc. 96–7773
Filed 3–27–96; 8:45 am]
Billing code 3195–01–P

Presidential Documents

Executive Order 12996 of March 25, 1996

Management and General Public Use of the National Wildlife Refuge System

By the authority vested in me as President by the Constitution and the laws of the United States of America, and in furtherance of the purposes of the Fish and Wildlife Act of 1956 (16 U.S.C. 742a), the Fish and Wildlife Coordination Act (16 U.S.C. 661), the National Wildlife Refuge System Administration Act (16 U.S.C. 668dd), the Refuge Recreation Act (16 U.S.C. 460k), the Endangered Species Act of 1973 (16 U.S.C. 1531), the Emergency Wetlands Resources Act (16 U.S.C. 3901), the North American Wetlands Conservation Act (16 U.S.C. 4401), the National Environmental Policy Act (42 U.S.C. 4321), and other pertinent statutes, and in order to conserve fish and wildlife and their habitat, it is ordered as follows:

Section 1. *The Mission of the National Wildlife Refuge System.* The mission of the National Wildlife Refuge System (''Refuge System'') is to preserve a national network of lands and waters for the conservation and management of fish, wildlife, and plant resources of the United States for the benefit of present and future generations.

Sec. 2. *Guiding Principles.* To help ensure a bright future for its treasured national heritage, I hereby affirm the following four guiding principles for the management and general public use of the Refuge System:

(a) *Public Use.* The Refuge System provides important opportunities for compatible wildlife-dependent recreational activities involving hunting, fishing, wildlife observation and photography, and environmental education and interpretation.

(b) *Habitat.* Fish and wildlife will not prosper without high-quality habitat, and without fish and wildlife, traditional uses of refuges cannot be sustained. The Refuge System will continue to conserve and enhance the quality and diversity of fish and wildlife habitat within refuges.

(c) *Partnerships.* America's sportsmen and women were the first partners who insisted on protecting valuable wildlife habitat within wildlife refuges. Conservation partnerships with other Federal agencies, State agencies, Tribes, organizations, industry, and the general public can make significant contributions to the growth and management of the Refuge System.

(d) *Public Involvement.* The public should be given a full and open opportunity to participate in decisions regarding acquisition and management of our National Wildlife Refuges.

Sec. 3. *Directives to the Secretary of the Interior.* To the extent consistent with existing laws and interagency agreements, the Secretary of the Interior, in carrying out his trustee and stewardship responsibilities for the Refuge System, is directed to:

(a) recognize compatible wildlife-dependent recreational activities involving hunting, fishing, wildlife observation and photography, and environmental education and interpretation as priority general public uses of the Refuge System through which the American public can develop an appreciation for fish and wildlife;

(b) provide expanded opportunities for these priority public uses within the Refuge System when they are compatible and consistent with sound principles of fish and wildlife management, and are otherwise in the public interest;

(c) ensure that such priority public uses receive enhanced attention in planning and management within the Refuge System;

(d) provide increased opportunities for families to experience wildlife-dependent recreation, particularly opportunities for parents and their children to safely engage in traditional outdoor activities, such as fishing and hunting;

(e) ensure that the biological integrity and environmental health of the Refuge System is maintained for the benefit of present and future generations of Americans;

(f) continue, consistent with existing laws and interagency agreements, authorized or permitted uses of units of the Refuge System by other Federal agencies, including those necessary to facilitate military preparedness;

(g) plan and direct the continued growth of the Refuge System in a manner that is best designed to accomplish the mission of the Refuge System, to contribute to the conservation of the ecosystems of the United States, and to increase support for the Refuge System and participation from conservation partners and the public;

(h) ensure timely and effective cooperation and collaboration with Federal agencies and State fish and wildlife agencies during the course of acquiring and managing National Wildlife Refuges;

(i) ensure appropriate public involvement opportunities will be provided in conjunction with refuge planning and management activities; and

(j) identify, prior to acquisition, existing compatible wildlife-dependent uses of new refuge lands that shall be permitted to continue on an interim basis pending completion of comprehensive planning.

Sec. 4. *Judicial Review*. This order does not create any right or benefit, substantive or procedural, enforceable at law or equity by a party against the United States, its agencies, its officers, or any person.

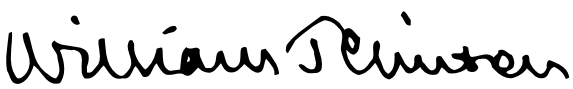

THE WHITE HOUSE,
March 25, 1996.

[FR Doc. 96–7774
Filed 3–27–96; 8:45 am]
Billing code 3195–01–P

Rules and Regulations

Federal Register
Vol. 61, No. 61
Thursday, March 28, 1996

This section of the FEDERAL REGISTER contains regulatory documents having general applicability and legal effect, most of which are keyed to and codified in the Code of Federal Regulations, which is published under 50 titles pursuant to 44 U.S.C. 1510.

The Code of Federal Regulations is sold by the Superintendent of Documents. Prices of new books are listed in the first FEDERAL REGISTER issue of each week.

DEPARTMENT OF AGRICULTURE

Animal and Plant Health Inspection Service

7 CFR Part 301

[Docket No. 96–016–3]

Karnal Bunt Infestations in Arizona et al.; Quarantining

AGENCY: Animal and Plant Health Inspection Service, USDA.

ACTION: Interim rule and request for comments.

SUMMARY: We are quarantining the State of Arizona and a total of six counties in the States of New Mexico and Texas because of infestations of Karnal bunt and are restricting the movement of regulated articles from the quarantined areas. This action is necessary on an emergency basis to prevent the artificial spread of Karnal bunt, a serious fungal disease of wheat, durum wheat, and triticale, into noninfected areas of the United States.

DATES: Interim rule effective March 25, 1996. Consideration will be given only to comments received on or before May 28, 1996.

ADDRESSES: Please send an original and three copies of your comments to Docket No. 96–016–3, Regulatory Analysis and Development, PPD, APHIS, suite 3C03, 4700 River Road, Unit 118, Riverdale MD 20737–1238. Please state that your comments refer to Docket No. 96–016–3. Comments received may be inspected at USDA, room 1141, South Building, 14th Street and Independence Avenue SW., Washington, DC, between 8 a.m. and 4:30 p.m., Monday through Friday, except holidays. Persons wishing to inspect comments are requested to call ahead on (202) 690–2817 to facilitate entry into the comment reading room.

FOR FURTHER INFORMATION CONTACT: Mr. Stephen Poe, Operations Officer, Domestic and Emergency Operations, PPQ, APHIS, 4700 River Road, Unit 134, Riverdale, MD 20732, (301) 734–8247.

SUPPLEMENTARY INFORMATION:

Background

We are amending the ''Domestic Quarantine Notices'' in 7 CFR part 301 by adding a new subpart 301.89, ''Karnal Bunt'' (referred to below as the regulations). These regulations quarantine all of Arizona and portions of New Mexico and Texas because of Karnal bunt. They also restrict the interstate movement of regulated articles from the quarantined areas.

On March 8, 1996, Karnal bunt, a serious fungal disease of wheat *(Triticum aestivum)*, durum wheat *(Triticum durum)*, and triticale *(Triticum aestivum* X *Seale cereals)*, a hybrid of wheat and rye, was detected in Arizona during a seed certification inspection done by the Arizona Department of Agriculture (ADA). The disease was found in three seedlots that had been grown in Arizona and shipped within Arizona as well as to New Mexico and Texas. Immediately after the Karnal bunt was detected, emergency action was taken by ADA and the Animal and Plant Health Inspection Service (APHIS) to control the artificial spread of this disease, and APHIS began working with other plant protection agencies to determine the extent of the infection.

On March 20, 1996, the Secretary of Agriculture signed a ''Declaration of Extraordinary Emergency'' authorizing the Secretary to take emergency action under 7 U.S.C. 150dd with regard to Karnal bunt within the States of Arizona, New Mexico, and Texas.

Karnal bunt is caused by the smut fungus *Tilletia indica* (Mitra) Mundkur and is spread by spores. Infection occurs during the flowering stage of the plant when the developing ovary of a host plant comes into contact with infectious sporidia. The spores can be carried on a variety of surfaces, including plants and plant parts, seeds, soil, elevators, buildings, farm equipment, tools, and even vehicles. Spores and the sporidia they produce also can be windborne. Although the sporidia are fragile and may be able to move only short distances, spores have been known to move longer distances.

Karnal bunt is a serious disease that affects both yield and grain quality. It adversely affects the color, odor, and palatability of flour and other foodstuffs made from wheat. Wheat containing any amount of bunted kernels is reduced in quality. Karnal bunt does not present a risk to human health.

Karnal bunt is difficult to manage because of the biology of the pathogen and the susceptibility of the host. Teliospores can remain viable for 4 to 5 years in the soil. Chemical seed treatments may reduce infection by controlling seedborne inoculum, but do little to eliminate soilborne inoculum. Use of resistant varieties of wheat would be the most effective means of control. However, no commercial cultivars are known to be established.

For this reason, Federal and State quarantines are needed on an emergency basis to retard the artificial spread of Karnal bunt and to protect noninfected areas. Therefore, this interim rule establishes a quarantine and regulations, which are described below by section, to prevent the artificial spread of Karnal bunt.

Definitions

Section 301.89–1 contains definitions of the following terms: *Administrator, Animal and Plant Health Inspection Service, certificate, compliance agreement, conveyances, farm tools, infestation (infected), inspector, interstate, Karnal bunt, limited permit, mechanized cultivating equipment and mechanized harvesting equipment, milling products and byproducts, movement (moved), person, soil, soil-moving equipment,* and *State. Regulated articles.*

The regulations impose conditions on the interstate movement of those articles that present a significant risk of spreading Karnal bunt if moved without restriction from quarantined areas into or through noninfected areas. The articles, which are designated as regulated articles, may not be moved interstate from quarantined areas except in accordance with the conditions specified in §§ 301.89–4 through 301.89–11.

Paragraphs (a) through (m) of § 301.89–2 designate the following as regulated articles: Conveyances, including trucks, railroad cars and other containers used to move wheat, durum wheat, or triticale; grain elevators/equipment/structures used for storing and handling wheat, durum wheat, and triticale; manure from animals that have

fed on wheat, durum wheat, or triticale; milling products or byproducts, except flour; plants or plant parts, including grain, seed, or straw of all varieties of the species of *Triticum aestivum* (wheat), *Triticum durum* (durum wheat); and *Triticum aestivum* X *Seale cereals* (triticale); root crops with soil; soil from areas where field crops are produced; used bags, sacks and containers; used farm tools; used mechanized cultivating equipment; used mechanized harvesting equipment; used seed conditioning equipment; and used mechanized soil-moving equipment.

Further, § 301.89(2)(n) allows designation of any other product, article or means of conveyance as a regulated article if an inspector determines that it presents a risk of spreading Karnal bunt due to its proximity to an infestation of Karnal bunt and notifies the person in possession of the product, article, or means of conveyance that it is subject to the restrictions in the regulations.

Quarantined areas

As stated in § 301.89–3(a), the Administrator will quarantine each State or each portion of a State that is infected. Section 301.89(b) provides that less than an entire State will be listed as a quarantined area only under certain conditions. Such a listing may be made if the Administrator determines that: (1) The State has adopted and is enforcing restrictions on the intrastate movement of the regulated articles listed in § 301.89–2 that are equivalent to the interstate movement restrictions imposed by the regulations in § 301.89–1 through § 301.89–11; and (2) designating less than the entire State as a quarantined area will prevent the artificial spread of Karnal bunt. Alternatively, less than an entire State may be listed as a quarantined area if the Administrator exercises his or her extraordinary emergency authority under 7 U.S.C. 150dd.

In accordance with these criteria, we are designating the State of Arizona, four counties in New Mexico, and two counties in Texas as quarantined areas. These quarantined areas are listed in § 301.89–3(e).

Section 301.89–3(c) provides that the Administrator may include uninfected acreage within a quarantined area due to its proximity to an infestation or inseparability from the infected locality for quarantine purposes, as determined by: (1) Projections of the spread of Karnal bunt along the periphery of the infestation; (2) the availability of natural habitats and host materials within the uninfected acreage that are suitable for establishment and survival of Karnal bunt; and (3) the necessity of including uninfected acreage within the quarantined area in order to establish readily identifiable boundaries.

Section 301.89–3(d) provides that the Administrator or an inspector may temporarily designate any nonquarantined area as a quarantined area, without publication in the Federal Register, if there is a basis for listing the area as a quarantined area under § 301.89–3 paragraphs (a), (b), or (c), and if the owner or person in possession of the nonquarantined area, or, in the case of publicly owned land, the person responsible for the management of the nonquarantined area, is given written notice of the designation. This is necessary to prevent the spread of Karnal bunt before restrictions can be published in the Federal Register concerning the interstate movement of regulated articles from the designated area.

Conditions Governing the Interstate Movement of Regulated Articles From Quarantined Areas

Section 301.89–4(a)(1) requires regulated articles moved interstate from a quarantined area into or through an area that is not quarantined to be accompanied by a certificate or limited permit issued and attached as prescribed by §§ 301.89–5 and 301.89–9.

Section 301.89–4(a)(2) allows a regulated article that originates outside the quarantined area to be moved interstate through a quarantined area without a certificate or limited permit under the following conditions: (1) The regulated article was moved into the quarantined area from an area that is not quarantined; (2) the point of origin is indicated on a waybill accompanying the regulated article; (3) the regulated article is moved through the quarantined area without stopping, or has been stored, packed, or handled at locations approved by an inspector, or has been treated in accordance with the methods and procedures prescribed in § 301.89–11 while in or moving through any quarantined area; and (4) the article has not been combined or commingled with other articles so as to lose its individual identity.

Section 301.89–4(a)(3) allows soil to be moved interstate from a quarantined area, provided the soil is being moved to a laboratory approved by the Administrator to process, test, or analyze soil samples.

Section 301.89–4(b) references the authority of an inspector who has probable cause to believe a person or means of conveyance is moving regulated articles in interstate commerce to stop the person or means of conveyance to determine whether regulated articles are present and to inspect the regulated articles. Further, § 301.89–4(b) provides that articles found to be infected by an inspector, and articles not in compliance with the regulations, may be seized, quarantined, treated, subjected to other remedial measures, destroyed, or otherwise disposed of.

Issuance of Certificates and Limited Permits

Under Federal domestic plant quarantine programs, there is a difference between the use of certificates and limited permits. Certificates are issued for regulated articles upon a finding by an inspector that, because of certain conditions (e.g., the article is free of Karnal bunt), there is an absence of a pest or disease risk prior to movement. Regulated articles accompanied by a certificate may be moved interstate without further restrictions being imposed. Limited permits are issued for regulated articles when an inspector has determined that, because of possible pest or disease risk, such articles may be safely moved interstate only subject to further restrictions, such as movement to specified areas and movement for specified purposes. Section § 301.89–5 explains the conditions for issuing a certificate or limited permit.

Specifically, § 301.89–5(a) provides that an inspector or person operating under a compliance agreement (discussed below) will issue a certificate for the interstate movement of a regulated article if the inspector determines that the regulated article: (1) Is eligible for unrestricted movement under all other applicable Federal domestic plant quarantines and regulations; (2) is to be moved in compliance with any emergency conditions the Administrator may impose under 7 U.S.C. 150dd to prevent the artificial spread of Karnal bunt; and (3) meets one of the following conditions: The article is free of Karnal bunt infection, based on laboratory results of testing, and history of previous infestation; the article has been grown, produced, manufactured, stored, or handled in a manner that would prevent infestation or destroy all life stages of Karnal bunt; or the article has been treated in accordance with methods and procedures prescribed in § 301.89–11.

Section 301.50–5(b) provides for the issuance of a limited permit (in lieu of a certificate), by an inspector or a person operating under a compliance agreement, for movement of a regulated

article if the inspector determines that the regulated article: (1) Is to be moved interstate to a specified destination for specified handling, utilization, or processing (the destination and other conditions to be listed in the limited permit and/or compliance agreement), and this interstate movement will not result in the artificial spread of Karnal bunt because Karnal bunt will be destroyed or the risk mitigated by the specified handling, utilization, or processing; (2) is to be moved interstate in compliance with any additional emergency conditions the Administrator may impose under 7 U.S.C. 150dd to prevent the spread of Karnal bunt; and (3) is eligible for interstate movement under all other Federal domestic plant quarantines and regulations applicable to the regulated article.

Section 301.89–5(c) provides that an inspector will issue blank certificates and limited permits to a person operating under a compliance agreement or authorize reproduction of the certificates or limited permits on shipping containers, or both, as requested by the person operating under the compliance agreement. These certificates or limited permits may then be completed and used, as needed, for the interstate movement of regulated articles that have met all of the requirements of § 301.89–5(a) or § 301.89–5(b), respectively.

Compliance Agreements

Section 301.89–6 provides for the use of compliance agreements. Specifically, compliance agreements may be entered into by any person engaged in the growing, handling, or movement of regulated articles interstate if such persons review with an inspector each stipulation of the compliance agreement, have facilities and equipment to carry out disinfestation procedures or application of chemical materials in accordance with § 301.89–11, and meet applicable State training and certification standards under the Federal Insecticide, Fungicide, and Rodenticide Act, as amended (7 U.S.C. 136b). Any person who enters into a compliance agreement with APHIS must agree to comply with the regulations.

Cancellation of a Certificate, Limited Permit, or Compliance Agreement

Section 301.89–7 provides that an inspector may cancel a certificate, limited permit, or compliance agreement, orally or in writing, whenever the inspector determines that the holder of the certificate or limited permit, or the person who has entered into the compliance agreement, has not complied with the regulations. If the cancellation is oral, the cancellation will become effective upon notification by the inspector. The cancellation and the reasons for the cancellation will then be confirmed in writing as soon as circumstances allow within 20 days after oral notification of the cancellation. Any person whose certificate, limited permit, or compliance agreement has been canceled may appeal the decision, in writing, within 10 days after receiving the written cancellation notice. The appeal must state all of the facts and reasons that the person wants the Administrator to consider in deciding the appeal. A hearing may be held to resolve any conflict as to any material fact. Rules of practice for the hearing will be adopted by the Administrator. As soon as practicable, the Administrator will grant or deny the appeal, in writing, stating the reasons for the decision.

Assembly and Inspection of Regulated Articles

Section 301.89–8(a) provides that any person who requires certification or other services from an inspector must request the services at least 48 hours before they are needed. Section 301.89–7(b) provides that regulated articles must be assembled at the place and in the manner an inspector designates as necessary to comply with the regulations.

Attachment and Disposition of Certificates and Limited Permits

Section 301.89(a) requires the consignor of a regulated article to ensure that the certificate or limited permit authorizing interstate movement of a regulated article is, at all times during interstate movement, attached to the regulated article, or to the outside of the container encasing the regulated article, or to the accompanying waybill. This section also provides that the certificate or limited permit may be attached to the consignees copy of the waybill only if the certificate and limited permit, and the waybill, contain a sufficient description of the regulated article to identify the regulated article. This provision is necessary for enforcement purposes.

Section 301.89–9(b) requires the carrier of the article to furnish the certificate or limited permit to the consignee at the shipment's destination.

Costs and Charges

Section 301.89–10 explains the APHIS policy that the services of an inspector during normal business hours will be furnished without cost to persons requiring the services. The user will be responsible for all costs and charges arising from inspection and other services provided outside of normal business hours.

Treatments

Treatments of regulated articles for Karnal bunt are set forth in § 301.89–11. These treatments are known to be efficacious in destroying Karnal bunt teliospores. To meet the requirements of the regulations for treatments, all conveyances, mechanized farm equipment, seed-conditioning equipment, soil-moving equipment, grain elevators and structures used for storing and handling wheat must be cleaned and disinfected by first removing all soil and plant debris, then treated in one of the following ways: (1) Wetting all surfaces to the point of runoff with a solution of sodium hypochlorite mixed with water applied at the rate of one gallon of a commercial chlorine bleach (5.2 percent sodium hypochlorite) mixed with 2.5 gallons of water (thoroughly washing the equipment or site after 15 minutes is recommended to minimize corrosion); (2) applying steam to all surfaces until the point of runoff; (3) cleaning with a solution of hot water and detergent, under high pressure (at least 30 pounds per square inch), at a minimum temperature of 180 °F.; or (4) fumigating with methyl bromide at the dosage of 15 pounds/1000 cubic feet for 96 hours. Soil and straw/stalks/seed heads for decorative purposes must be fumigated with methyl bromide at the dosage of 15 pounds/1000 cubic feet for 96 hours.

Emergency Action

The Administrator of the Animal and Plant Health Inspection Service has determined that an emergency exists that warrants publication of this interim rule without prior opportunity for public comment. Immediate action is necessary to prevent Karnal bunt from spreading to noninfected areas of the United States.

Because prior notice and other public procedures with respect to this action are impracticable and contrary to the public interest under these conditions, we find good cause under 5 U.S.C. 553 to make it effective upon signature. We will consider comments that are received within 60 days of publication of this rule in the Federal Register. After the comment period closes, we will publish another document in the Federal Register. It will include a discussion of any comments we receive and any amendments we are making to the rule as a result of the comments.

Executive Order 12866 and Regulatory Flexibility Act

This rule has been reviewed under Executive Order 12866. For this action, the Office of Management and Budget has waived its review process required by Executive Order 12866

This action quarantines the State of Arizona and six counties in New Mexico and Texas because of Karnal bunt and restricts the interstate movement of regulated articles from areas quarantined because of infestation with Karnal bunt. This emergency situation makes compliance with section 603 and timely compliance with section 604 of the Regulatory Flexibility Act (5 U.S.C. 603 and 604) impracticable. This rule may have a significant economic impact on a substantial number of small entities. If we determine this is so, then we will discuss the issues raised by section 604 of the Regulatory Flexibility Act in our Final Regulatory Flexibility Act Analysis.

Executive Order 12372

This program/activity is listed in the Catalog of Federal Domestic Assistance under No. 10.025 and is subject to Executive Order 12372, which required intergovernmental consultation with State and local officials. (See 7 CFR part 3015, subpart V.)

Executive Order 12778

This rule has been reviewed under Executive Order 12778, Civil Justice Reform. This rule: (1) Preempts all State and local laws and regulations that are inconsistent with this rule; (2) has no retroactive effect; and (3) only requires administrative proceedings before parties may file suit in court challenging this rule upon the cancellation of a certificate, limited permit, or compliance agreement.

National Environmental Policy Act

An environmental assessment and finding of no significant impact have been prepared for this rule. The assessment provides a basis for the conclusion that the treatment of regulated articles, under the conditions specified in this rule, will not have a significant impact on the quality of the human environment. Based on the finding of no significant impact, the Administrator of the Animal and Plant Health Inspection Service has determined that an environmental impact statement need not be prepared.

The environmental assessment and finding of no significant impact were prepared in accordance with: (1) The National Environmental Policy Act of 1969 (NEPA) (42 U.S.C 4321 *et seq.*), (2) Regulations on the Council on Environmental Quality for implementing the procedural provisions of NEPA (40 CFR parts 1500–1508), (3) USDA regulations implementing NEPA (7 CFR part 1b), and (4) APHIS' NEPA Implementing Procedures (7 CFR part 372).

Copies of the environmental assessment and finding of no significant impact are available for public inspection at USDA, room 1141, South Building, 14th Street and Independence Avenue SW., Washington, DC, between 8 a.m. and 4:30 p.m., Monday through Friday, except holidays. Persons wishing to inspect copies are requested to call ahead on (202) 690–2817 to facilitate entry into the reading room. In addition, copies may be obtained by writing to the individual listed under **FOR FURTHER INFORMATION CONTACT.**

Paperwork Reduction Act

In accordance with section 3507(j) of the Paperwork Reduction Act of 1995 (44 U.S.C. 3501 *et seq.*), the information collection and recordkeeping requirements included in this interim rule have been submitted for emergency approval to the Office of Management and Budget (OMB). OMB has assigned control number 0579–0121 to the information collection and recordkeeping requirements. Notwithstanding any other provision of the law, no person is required to respond to, nor shall any person be subject to a penalty for failure to comply with a collection of information, subject to the requirements of the Paperwork Reduction Act, unless that collection of information displays a currently valid OMB Control Number. Please send written comments to the Office of Information and Regulatory Affairs, OMB, Attention: Desk Officer for APHIS, Washington, DC 20503. Please state that your comments refer to Docket No. 96–016–3. Please send a copy of your comments to: (1) Docket No. 96–016–3, Regulatory Analysis and Development, PPD, APHIS, suite 3C03, 4700 River Road Unit 118, Riverdale, MD 20737–1238, and (2) Clearance Officer, OIRM, USDA, room 404–W, 14th Street and Independence Avenue SW., Washington, DC 20250.

The paperwork associated with the Karnal bunt program will include the completion of compliance agreements, certificates, and limited permits. There will also be requests for inspections. We are soliciting comments from the public (as well as affected agencies) concerning our proposed information collection and recordkeeping requirements. We need this outside input to help us accomplish the following:

(1) Evaluate whether the proposed collection of information is necessary for the proper performance of our agency's functions, including whether the information will have practical utility;

(2) Evaluate the accuracy of our estimate of the burden of the proposed collection of information, including the validity of the methodology and assumptions used;

(3) Enhance the quality, utility, and clarity of the information to be collected; and

(4) Minimize the burden of the information collection on those who are to respond (such as through the use of appropriate automated, electronic, mechanical, or other technological collection techniques or other forms of information technology, e.g., permitting electronic submission responses).

Estimate of burden: Public reporting burden for this collection of information is estimated to average 15 minutes per response.

Respondents: State plant regulatory officials, shippers, growers, and representatives of the plant industry.

Estimated number of respondents: 1,573.

Estimated number of responses per respondent: 4.

Estimated total annual burden on respondents: 1,500.

Copies of this information collection can be obtained from: Clearance Officer, OIRM, USDA, room 404–W, 14th Street and Independence Avenue SW., Washington, DC 20250.

List of subjects in 7 CFR Part 301

Agricultural commodities, Plant diseases and pests, Quarantine, Reporting and recordkeeping requirements, Transportation.

PART 301—DOMESTIC QUARANTINE NOTICES

Accordingly, 7 CFR part 301 is amended as follows:

1. The authority citation for part 301 continues to read as follows:

Authority: 7 U.S.C. 150bb, 150dd, 150ee, 150ff, 161, 162, and 164–167; 7 CFR 2.22, 2,80, and 371.2(c).

2. Part 301 is amended by adding a new ''Subpart—Karnal Bunt'', sections 301.89 through 301.89–11, to read as follows:

Subpart—Karnal Bunt

Sec.

301.89–1 Definitions.
301.89–2 Regulated articles.
301.89–3 Quarantined areas.
301.89–4 Interstate movement of regulated articles from quarantined areas.
301.89–5 Issuance of a certificate or limited permit.

301.89–6 Compliance agreements.
301.89–7 Cancellation of a certificate, limited permit, or compliance agreement.
301.89–8 Assembly and inspection of regulated articles.
301.89–9 Attachment and disposition of certificates and limited permits.
301.89–10 Costs and charges.
301.89–11 Treatments.

Subpart—Karnal Bunt

§ 301.89–1 Definitions.

Administrator. The Administrator, Animal and Plant Health Inspection Service, or any person authorized to act for the Administrator.

Animal and Plant Health Inspection Service (APHIS). The Animal and Plant Health Inspection Service of the U.S. Department of Agriculture.

Certificate. A document in which an inspector or a person operating under a compliance agreement affirms that a specified regulated article meets the requirements of this subpart and may be moved interstate to any destination.

Compliance agreement. A written agreement between APHIS and a person engaged in growing, handling, or moving regulated articles that are moved interstate, in which the person agrees to comply with the provisions of this subpart and any conditions imposed under this subpart.

Conveyances. Containers used to move wheat, durum wheat, or triticale, or their products, including trucks, trailers, railroad cars, bins, and hoppers.

Farm tools. An instrument worked or used by hand, e.g., hoes, rakes, shovels, and axes.

Infestation (infected). The presence of Karnal bunt, or any stage of development of the fungus *Tilletia indica* (Mitra) Mundkur, or the existence of circumstances that make it reasonable to believe that Karnal bunt is present.

Inspector. An APHIS employee or designated cooperator/collaborator authorized by the Administrator to enforce the provisions of this subpart.

Interstate. From any State into or through any other State.

Karnal bunt. A plant disease caused by the fungus *Tilletia indica* (Mitra) Mundkur.

Limited permit. A document in which an inspector affirms that a specified regulated article not eligible for a certificate is eligible for interstate movement only to a specified destination and in accordance with conditions specified on the permit.

Mechanized cultivating equipment and mechanized harvesting equipment. Mechanized equipment used for soil tillage, including tillage attachments for farm tractors—e.g., tractors, disks, plows, harrows, planters, and subsoilers; mechanized equipment used for harvesting purposes—e.g., combines, cotton harvesters, and hay balers.

Milling products and byproducts. Products resulting from processing wheat, durum wheat, or triticale, including animal feed, and waste and debris.

Movement (moved). The act of shipping, transporting, delivering, or receiving for movement, or otherwise aiding, abetting, inducing or causing to be moved.

Person. Any association, company, corporation, firm, individual, joint stock company, partnership, society, or any other legal entity.

Soil. That part of the upper layer of earth in which plants can grow.

Soil-moving equipment. Equipment used for moving or transporting soil, including, but not limited to, bulldozers, dump trucks, or road scrapers.

State. The District of Columbia, Puerto Rico, the Northern Mariana Islands, or any State, territory, or possession of the United States.

§ 301.89–2 Regulated articles.

The following are regulated articles:

(a) Conveyances, including trucks, railroad cars, and other containers used to move wheat, durum wheat, or triticale;

(b) Grain elevators/equipment/structures used for storing and handling wheat, durum wheat, and triticale;

(c) Milling products or byproducts, except flour;

(d) Plants, or plant parts, including grain, seed, or straw of all varieties of the following species:

Wheat: *Triticum aestivum;*
Durum wheat: *Triticum durum;* and
Triticale: *Triticum aestivum X Seale cereals;*

(e) Root crops with soil;

(f) Soil from areas where field crops are produced;

(g) Manure from animals that have fed on wheat, durum wheat, or triticale;

(h) Used bags, sacks and containers;

(i) Used farm tools;

(j) Used mechanized cultivating equipment;

(k) Used mechanized harvesting equipment;

(l) Used seed conditioning equipment;

(m) Used mechanized soil-moving equipment; and

(n) Any other product, article or means of conveyance when:

(i) An inspector determines that it presents a risk of spreading Karnal bunt due to its proximity to an infestation of Karnal bunt; and

(ii) The person in possession of the product, article, or means of conveyance has been notified that it is regulated under this subpart.

§ 301.89–3 Quarantined areas.

(a) The Administrator will quarantine each State or each portion of a State that is infected.

(b) Less than an entire State will be listed as a quarantined area only if the Administrator:

(1) (i) Determines that the State has adopted and is enforcing restrictions on the intrastate movement of the regulated articles listed in § 301.89–2 that are equivalent to the interstate movement restrictions imposed by this subpart; and

(ii) Determines that designating less than the entire State as a quarantined area will prevent the spread of Karnal bunt; or

(2) Exercises his or her extraordinary emergency authority under 7 U.S.C. 150dd.

(c) The Administrator may include noninfected acreage within a quarantined area due to its proximity to an infestation or inseparability from the infected locality for quarantine purposes, as determined by:

(1) Projections of the spread of Karnal bunt along the periphery of the infestation;

(2) The availability of natural habitats and host materials within the noninfected acreage that are suitable for establishment and survival of Karnal bunt; and

(3) The necessity of including uninfected acreage within the quarantined area in order to establish readily identifiable boundaries.

(d) The Administrator or an inspector may temporarily designate any nonquarantined area as a quarantined area in accordance with the criteria specified in paragraphs (a), (b), and (c) of this section. The Administrator will give written notice of this designation to the owner or person in possession of the nonquarantined area, or, in the case of publicly owned land, to the person responsible for the management of the nonquarantined area. Thereafter, the interstate movement of any regulated article from an area temporarily designated as a quarantined area is subject to this subpart. As soon as practicable, this area either will be added to the list of designated quarantined areas in paragraph (e) of this section, or the Administrator will terminate the designation. The owner or person in possession of, or, in the case of publicly owned land, the person responsible for the management of, an area for which the designation is

terminated will be given written notice of the termination as soon as practicable.

(e) The following areas are designated as quarantined areas:

Arizona

The entire State.

New Mexico

Dona Ana County. The entire county.
Hidalgo. The entire county.
Luna County. The entire county.
Sierra County. The entire county.

Texas

El Paso County. The entire county.
Hudspeth. The entire county.

§ 301.89–4 Interstate movement of regulated articles from quarantined areas.

(a) Any regulated article may be moved interstate from a quarantined area into or through an area that is not quarantined only if moved under the following conditions:

(1) With a certificate or limited permit issued and attached in accordance with §§ 301.89–5 and 301.89–9;

(2) Without a certificate or limited permit, provided that each of the following conditions is met:

(i) The regulated article was moved into the quarantined area from an area that is not quarantined;

(ii) The point of origin is indicated on a waybill accompanying the regulated article;

(iii) The regulated article is moved through the quarantined area without stopping, or has been stored, packed, or handled at locations approved by an inspector as not posing a risk of contamination with Karnal bunt, or has been treated in accordance with the methods and procedures prescribed in § 301.89–11 while in or moving through any quarantined area; and

(iv) The article has not been combined or commingled with other articles so as to lose its individual identity; or

(3) Without a certificate or limited permit, provided the regulated article is a soil sample being moved to a laboratory approved by the Administrator [1] to process, test, or analyze soil samples.

(b) When an inspector has probable cause to believe a person or means of conveyance is moving a regulated article in interstate commerce, the inspector is authorized to stop the person or means of conveyance to determine whether a regulated article is present and to inspect the regulated article. Articles found to be infected by an inspector, and articles not in compliance with the regulations in this subpart, may be seized, quarantined, treated, subjected to other remedial measures, destroyed, or otherwise disposed of. Any treatments will be in accordance with the methods and procedures prescribed in § 301.89–11.

§ 301.89–5 Issuance of a certificate or limited permit.

(a) An inspector [2] or person operating under a compliance agreement will issue a certificate for the interstate movement of a regulated article if he or she determines that the regulated article:

(1) Is eligible for unrestricted movement under all other applicable Federal domestic plant quarantines and regulations;

(2) Is to be moved in compliance with any emergency conditions the Administrator may impose under 7 U.S.C. 150dd to prevent the artificial spread of Karnal bunt [3]; and

(3) (i) Is free of Karnal bunt infestation, based on laboratory results of testing, and history of previous infestation;

(ii) Has been grown, produced, manufactured, stored, or handled in a manner that would prevent infestation or destroy all life stages of Karnal bunt; or

(iii) Has been treated in accordance with methods and procedures prescribed in § 301.89–11.

(b) An inspector or a person operating under a compliance agreement will issue a limited permit for the interstate movement of a regulated article not eligible for a certificate if the inspector determines that the regulated article:

(1) Is to be moved interstate to a specified destination for specified handling, utilization, or processing (the destination and other conditions to be listed in the limited permit and/or compliance agreement), and this interstate movement will not result in the artificial spread of Karnal bunt because Karnal bunt will be destroyed or the risk mitigated by the specified handling, utilization, or processing;

(2) Is to be moved interstate in compliance with any additional emergency conditions the Administrator may impose under 7 U.S.C. 150dd to prevent the artificial spread of Karnal bunt; and

(3) Is eligible for interstate movement under all other Federal domestic plant quarantines and regulations applicable to the regulated article.

(c) An inspector shall issue blank certificates and limited permits to a person operating under a compliance agreement in accordance with § 301.89–6 or authorize reproduction of the certificates or limited permits on shipping containers, or both, as requested by the person operating under the compliance agreement. These certificates and limited permits may then be completed and used, as needed, for the interstate movement of regulated articles that have met all of the requirements of paragraph (a) or (b), respectively, of this section.

§ 301.89–6 Compliance agreements.

Persons who grow, handle, or move regulated articles interstate may enter into a compliance agreement [4] if such persons review with an inspector each stipulation of the compliance agreement, have facilities and equipment to carry out disinfestation procedures or application of chemical materials in accordance with § 301.89–11, and meet applicable State training and certification standards under the Federal Insecticide, Fungicide, and Rodenticide Act, as amended (7 U.S.C. 136b). Any person who enters into a compliance agreement with APHIS must agree to comply with the provisions of this subpart and any conditions imposed under this subpart.

§ 301.89–7 Cancellation of a certificate, limited permit, or compliance agreement.

Any certificate, limited permit, or compliance agreement may be canceled orally or in writing by an inspector whenever the inspector determines that the holder of the certificate or limited permit, or the person who has entered into the compliance agreement, has not complied with this subpart or any conditions imposed under this subpart.

[1] Criteria that laboratories must meet to become approved to process, test, or analyze soil, and the list of currently approved laboratories, may be obtained from the Animal and Plant Health Inspection Service, Plant Protection and Quarantine, Domestic and Emergency Operations, 4700 River Road Unit 134, Riverdale, Maryland 20737–1236.

[2] Inspectors are assigned to local offices of APHIS, which are listed in local telephone directories. Information concerning such local offices may also be obtained from the Animal and Plant Health Inspection Service, Plant Protection and Quarantine, Domestic and Emergency Operations, 4700 River Road Unit 134, Riverdale, Maryland 20737–1236, or from Karnal Bunt Project, 1688 W. Adams St., Phoenix, Arizona 85007.

[3] Section 105 of the Federal Plant Pest Act (7 U.S.C. 105dd) authorizes the Secretary of Agriculture to impose emergency measures necessary to prevent the spread of plant pests new to, or not widely prevalent or distributed within and throughout, the United States.

[4] Compliance agreements may be initiated by contacting a local office of Plant Protection and Quarantine, which are listed in telephone directories. The addresses and telephone numbers of local offices of Plant Protection and Quarantine may also be obtained from the Animal and Plant Health Inspection Service, Plant Protection and Quarantine, 4700 River Road Unit 134, Riverdale, Maryland 20737–1236, or from the Karnal Bunt Project, 1688 W. Adams St., Phoenix, Arizona 85007.

If the cancellation is oral, the cancellation will become effective immediately and the cancellation and the reasons for the cancellation will be confirmed in writing as soon as circumstances allow, but within 20 days after oral notification of the cancellation. Any person whose certificate, limited permit, or compliance agreement has been canceled may appeal the decision, in writing, within 10 days after receiving the written cancellation notice. The appeal must state all of the facts and reasons that the person wants the Administrator to consider in deciding the appeal. A hearing may be held to resolve any conflict as to any material fact. Rules of practice for the hearing will be adopted by the Administrator. As soon as practicable, the Administrator will grant or deny the appeal, in writing, stating the reasons for the decision.

§ 301.89–8 Assembly and inspection of regulated articles.

(a) Persons requiring certification or other services must request the services from an inspector[5] at least 48 hours before the services are needed.

(b) The regulated articles must be assembled at the place and in the manner the inspector designates as necessary to comply with this subpart.

§ 301.89–9 Attachment and disposition of certificates and limited permits.

(a) The consignor must ensure that the certificate or limited permit authorizing interstate movement of a regulated article is, at all times during interstate movement, attached to:

(1) The outside of the container encasing the regulated article;

(2) The article itself, if it is not in a container; or

(3) The consignee's copy of the accompanying waybill: Provided, that the descriptions of the regulated article on the certificate or limited permit, and on the waybill, are sufficient to identify the regulated article; and

(b) The carrier must furnish the certificate or limited permit authorizing interstate movement of a regulated article to the consignee at the shipment's destination.

§ 301.89–10 Costs and charges.

The services of the inspector during normal business hours will be furnished without cost to persons requiring the services. The user will be responsible for all costs and charges arising from inspection and other services provided outside of normal business hours.

[5] See footnote 2.

§ 301.89–11 Treatments.

(a) All conveyances, mechanized farm equipment, seed-conditioning equipment, soil-moving equipment, grain elevators and structures used for storing and handling wheat, durum wheat, or triticale must be cleaned and disinfected by removing all soil and plant debris and:

(1) Wetting all surfaces to the point of runoff with a solution of sodium hypochlorite mixed with water applied at the rate of 1 gallon of commercial chlorine bleach (5.2 percent sodium hypochlorite) mixed with 2.5 gallons of water. The equipment or site should be thoroughly washed down after 15 minutes to minimize corrosion; or

(2) Applying steam to all surfaces until the point of runoff;

(3) Cleaning with a solution of hot water and detergent, under high pressure (at least 30 pounds per square inch), at a minimum temperature of 180 °F.; or

(4) Fumigating with methyl bromide at the dosage of 15 pounds/1000 cubic feet for 96 hours.

(b) Soil, and straw/stalks/seed heads for decorative purposes must be treated by fumigation with methyl bromide at the dosage of 15 pounds/1000 cubic feet for 96 hours.

Done in Washington, DC, this 25th day of March, 1996.

Lonnie J. King,

Administrator, Animal and Plant Health Inspection Service.

[FR Doc. 96–7545 Filed 3–27–96; 8:45 am]

BILLING CODE 3410–34–P

NUCLEAR REGULATORY COMMISSION

10 CFR Part 2

Policy and Procedure for Enforcement Actions; Removal; Correction

AGENCY: Nuclear Regulatory Commission.

ACTION: Policy statement: Correction.

SUMMARY: This document corrects a notice appearing in the Federal Register on June 30, 1995 (60 FR 34380), that announced the removal of the Nuclear Regulatory Commission's (NRC's) Enforcement Policy from the Code of Federal Regulations. This action is necessary to correct an inadvertent indication in the Paperwork Reduction Act Statement section that the policy statement did not include any information collection requirements. Because this notice and a second notice announcing the revision of the NRC's Enforcement Policy (60 FR 34381; June 30, 1995) were subsequently issued in their entirety as NUREG–1600, NUREG–1600 also includes this inadvertent indication. An errata for NUREG–1600 is being issued to address this issue.

FOR FURTHER INFORMATION CONTACT: James Lieberman, Director, Office of Enforcement, U.S. Nuclear Regulatory Commission, Washington, DC 20555–0001, telephone (301) 415–2741.

On page 34380, in the third full paragraph in the third column, the correct Paperwork Reduction Act Statement for the NRC's Enforcement Policy should read: ''This policy statement does not contain a new or amended information collection requirement subject to the Paperwork Reduction Act of 1980 (44 U.S.C. 3501 *et seq.*). Existing requirements were approved by the Office of Management and Budget, approval number 3150–0136. The approved information collection requirements contained in this policy statement appear in Section VII.C.''

Dated at Rockville, Maryland, this 22nd day of March 1996.

For the Nuclear Regulatory Commission.

John C. Hoyle,

Secretary of the Commission.

[FR Doc. 96–7532 Filed 3–27–96; 8:45 am]

BILLING CODE 7590–01–P

DEPARTMENT OF TRANSPORTATION

Federal Aviation Administration

14 CFR Part 39

[Docket No. 95–SW–04–AD; Amendment 39–9552; AD 96–07–03]

Airworthiness Directives; Societe Nationale Industrielle Aerospatiale and Eurocopter France Model AS 350B, BA, B1, B2, and D, and Model AS 355E, F, F1, F2, and N Helicopters

AGENCY: Federal Aviation Administration, DOT.

ACTION: Final rule.

SUMMARY: This amendment adopts a new airworthiness directive (AD), applicable to Societe Nationale Industrielle Aerospatiale and Eurocopter France (Eurocopter France) Model AS 350B, BA, B1, B2, and D, and Model AS 355E, F, F1, F2, and N helicopters, without an autopilot installed, that requires a visual inspection to determine whether the cyclic pitch change control rod (rod) end fittings were safetied, and removal

and replacement of the rod if the rod end fittings were not safetied. This amendment is prompted by a manufacturer's report that some of the rod end fittings had not been safetied at the factory. The actions specified by this AD are intended to prevent loss of tightening torque on the adjustment nuts of the rod, shifting of the neutral point of the cyclic stick, reduction in the amount of available movement of the cyclic stick in the roll axis, and subsequent reduction in the controllability of the helicopter.

EFFECTIVE DATE: Effective May 2, 1996.

FOR FURTHER INFORMATION CONTACT: Mr. Richard Monschke, Aerospace Engineer, FAA, Rotorcraft Directorate, Rotorcraft Standards Staff, 2601 Meacham Blvd., Fort Worth, Texas 76137, telephone (817) 222–5116, fax (817) 222–5961.

SUPPLEMENTARY INFORMATION: A proposal to amend part 39 of the Federal Aviation Regulations (14 CFR part 39) to include an airworthiness directive (AD) that is applicable to Eurocopter France Model AS 350B, BA, B1, B2, and D, and Model AS 355E, F, F1, F2, and N helicopters, without an autopilot installed, was published in the Federal Register on November 1, 1995 (60 FR 55491). That action proposed to require a visual inspection to confirm that the rod end fittings are safetied, and removal and replacement of the rod, if necessary.

Eurocopter France has issued Eurocopter Service Bulletin No. 01.38, dated June 26, 1994, for the Model AS 355 series helicopters, and Eurocopter Service Bulletin No. 01.42, dated June 28, 1994, for the Model AS 350 series helicopters, which specifies a visual inspection to determine whether the rod end fittings have been safetied; reinstallation of the forward lower fairing if the rod end fittings have been safetied, and removal and replacement of the rod with an airworthy rod and reinstallation of the forward lower fairing if the rod end fittings have not been safetied. The Direction Generale De L'Aviation Civile, which is the airworthiness authority for France, classified this service bulletin as mandatory and issued AD 94–179–051(B) and AD 94–180–069(B), both dated August 3, 1994, in order to assure the continued airworthiness of these helicopters in France.

Interested persons have been afforded an opportunity to participate in the making of this amendment. No comments were received on the proposal or the FAA's determination of the cost to the public. However, a note has been inserted at the end of paragraph (c) to alert the reader that a Eurocopter Service Bulletin has been issued that pertains to the requirements of this AD. The FAA has determined that air safety and the public interest require the adoption of the rule with the noted change.

The FAA estimates that 498 helicopters of U.S. registry will be affected by this AD, that it will take approximately one-fourth of a work hour per helicopter to inspect the rod end fittings, and 1 work hour to remove and reinstall the rod, if necessary, and that the average labor rate is $60 per work hour. Required parts will be provided by the manufacturer. Based on these figures, the total cost impact of the AD on U.S. operators is estimated to be $37,350.

The regulations adopted herein will not have substantial direct effects on the States, on the relationship between the national government and the States, or on the distribution of power and responsibilities among the various levels of government. Therefore, in accordance with Executive Order 12612, it is determined that this final rule does not have sufficient federalism implications to warrant the preparation of a Federalism Assessment.

For the reasons discussed above, I certify that this action (1) is not a ''significant regulatory action'' under Executive Order 12866; (2) is not a ''significant rule'' under DOT Regulatory Policies and Procedures (44 FR 11034, February 26, 1979); and (3) will not have a significant economic impact, positive or negative, on a substantial number of small entities under the criteria of the Regulatory Flexibility Act. A final evaluation has been prepared for this action and it is contained in the Rules Docket. A copy of it may be obtained from the Rules Docket at the location provided under the caption **ADDRESSES.**

List of Subjects in 14 CFR Part 39

Air transportation, Aircraft, Aviation safety, Safety.

Adoption of the Amendment

Accordingly, pursuant to the authority delegated to me by the Administrator, the Federal Aviation Administration amends part 39 of the Federal Aviation Regulations (14 CFR part 39) as follows:

PART 39—AIRWORTHINESS DIRECTIVES

1. The authority citation for part 39 continues to read as follows:

Authority: 49 USC 106(g), 40113, 44701.

§ 39.13 [Amended]

2. Section 39.13 is amended by adding a new airworthiness directive to read as follows:

AD 96–07–03 Societe Nationale Industrielle Aerospatiale and Eurocopter France: Amendment 39–9552. Docket No. 95–SW–04–AD.

Applicability: Model AS 350B, BA, B1, B2, and D, and Model AS 355E, F, F1, F2, and N helicopters, with cyclic pitch change control rod, part number (P/N) 704A34–113–279, installed, and without an autopilot installed, certificated in any category.

Note 1: This AD applies to each helicopter identified in the preceding applicability provision, regardless of whether it has been modified, altered, or repaired in the area subject to the requirements of this AD. For helicopters that have been modified, altered, or repaired so that the performance of the requirements of this AD is affected, the owner/operator must use the authority provided in paragraph (d) to request approval from the FAA. This approval may address either no action, if the current configuration eliminates the unsafe condition, or different actions necessary to address the unsafe condition described in this AD. Such a request should include an assessment of the effect of the changed configuration on the unsafe condition addressed by this AD. In no case does the presence of any modification, alteration, or repair remove any helicopter from the applicability of this AD.

Compliance: Required as indicated, unless accomplished previously.

To prevent loss of tightening torque on the adjustment nuts of the cyclic pitch change control rod, shifting of the neutral position of the cyclic stick, reduction in the amount of available movement of the cyclic stick in the roll axis, and subsequent reduction in the controllability of the helicopter, accomplish the following:

(a) Within 100 hours time-in-service (TIS) after the effective date of this AD, remove the forward lower fairing and visually inspect the cyclic pitch change control rod (rod), P/N 704A34–113–279, to determine whether the end fittings have been safetied (see Figure 1, Detail 1, tabs bent around the adjustment nut).

(b) If the visual inspection indicates that the rod end fittings have been safetied, reinstall the forward lower fairing.

(c) If the visual inspection indicates that the rod end fittings have not been safetied (see Figure 1, Detail 2, tabs not bent around the adjustment nut), accomplish the following in accordance with the applicable maintenance manual:

(1) Immobilize the cyclic control.

(2) Remove the rod and replace it with an airworthy rod on which the rod end fittings have been safetied.

(3) Reinstall the forward lower fairing.

(4) Verify proper operation of the cyclic control.

Note 2: Eurocopter Service Bulletin No. 01.38, dated June 26, 1994, for the Model AS 355 series helicopters, and Eurocopter Service Bulletin No. 01.42, dated June 28, 1994, for the Model AS 350 series helicopters, pertain to this subject.

(d) An alternative method of compliance or adjustment of the compliance time that provides an acceptable level of safety may be used when approved by the Manager, Rotorcraft Standards Staff, FAA, Rotorcraft Directorate. Operators shall submit their requests through an FAA Principal Maintenance Inspector, who may concur or comment and then send it to the Manager, Rotorcraft Standards Staff.

Note 3: Information concerning the existence of approved alternative methods of compliance with this AD, if any, may be obtained from the Rotorcraft Standards Staff.

BILLING CODE 4910–13–U

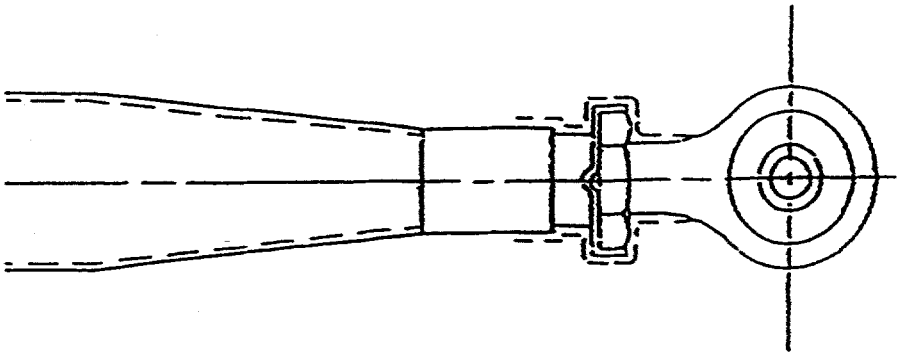

DETAIL 1

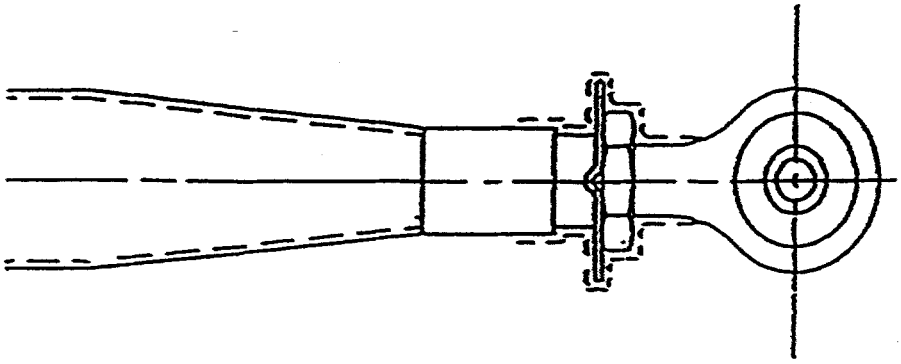

DETAIL 2

BILLING CODE 4910–13–C

(e) Special flight permits may be issued in accordance with sections 21.197 and 21.199 of the Federal Aviation Regulations (14 CFR 21.197 and 21.199) to operate the helicopter to a location where the requirements of this AD can be accomplished.

(f) This amendment becomes effective on May 2, 1996.

Issued in Fort Worth, Texas, on March 20, 1996.

Daniel P. Salvano,

Manager, Rotorcraft Directorate, Aircraft Certification Service.

[FR Doc. 96–7494 Filed 3–27–96; 8:45 am]

BILLING CODE 4910–13–U

FEDERAL TRADE COMMISSION

16 CFR Part 460

Trade Regulation Rule: Labeling and Advertising of Home Insulation

AGENCY: Federal Trade Commission.

ACTION: Final rule.

SUMMARY: The Federal Trade Commission (the ''Commission'' or ''FTC'') announces it is retaining its Trade Regulation Rule Concerning the Labeling and Advertising of Home Insulation (''R-value Rule'' or ''Rule'') and adopting non-substantive amendments to the Rule. The Commission amends section 460.5(a) of the R-value Rule to allow use of the R-value test procedure in American Society of Testing and Materials (''ASTM'') standard test method C 1114–95. The Commission also amends sections 460.5(a), 460.5(a)(2), 460.5(b), and 460.5(d)(1) to specify revised versions of additional ASTM standards that are required for determining the R-value of home insulation. Further, the Commission amends the Rule to add a summary of the exemptions from specific requirements of the Rule that the Commission previously granted for certain classes of persons covered by the Rule. Last, the Commission adopts a non-substantive amendment to revise section 460.10 to cross-reference the Commission's enforcement policy statement for foreign language advertising in 16 CFR 14.9 and to delete the current Appendix to the Rule, which merely repeats the text of 16 CFR 14.9.

EFFECTIVE DATE: The amendments are effective on April 29, 1996. The incorporation by reference of certain publications listed in the regulations is approved by the Director of the Federal Register as of April 29, 1996.

FOR FURTHER INFORMATION CONTACT: Kent C. Howerton, Attorney, Federal Trade Commission, Washington, DC 20580, (202) 326–3013 (voice), (202) 326–3259 (fax).

SUPPLEMENTARY INFORMATION:

I. Introduction

On April 6, 1995, as part of its oversight responsibilities and its program to review all current Commission rules and guides periodically, the Commission solicited public comments about the economic impact of and current need for the R-value Rule, 60 FR 17492 (1995).[1] At the same time, the Commission solicited comments on a petition (''Petition'') requesting the Commission to approve an additional (fifth) ASTM R-value test procedure as an optional, but not required, test procedure for determining the R-value of home insulation under the Rule.

The Commission received 42 comments in response to the April 6, 1995 notice.[2] The commenters included the following parties: Manufacturers of cellular plastics, cellulose, mineral fiber, and reflective insulation products; manufacturers of structural insulated panels; trade associations comprised of manufacturers of insulation products and structural insulated panels, professional installers, and roofing contractors; independent technical consultants to industry; a government contractor; and individual consumers. Specific issues addressed by the commenters are described below in Parts III through VI.

II. Requirements of the R-Value Rule

The Commission promulgated the R-value Rule under section 18 of the FTC Act, 15 U.S.C. 57a, on August 27, 1979.[3] The Rule became effective on September 29, 1980, 45 FR 54702 (1980).

The R-value Rule covers home insulation products. The Rule defines ''insulation'' as any product mainly used to slow down heat flow, for example through a house's exterior walls, attic, floors over crawl spaces, or basement. It defines ''home insulation'' as insulation used in old or new houses, condominiums, cooperatives, apartments, modular homes, and mobile homes. The Rule does not cover insulation products sold for use in commercial or industrial buildings, such as offices or factories. It does not apply to other products with insulating characteristics, such as storm windows or doors.

The Rule applies to home insulation manufacturers, professional installers, retailers, and new home sellers (including sellers of manufactured or mobile homes). It also applies to testing laboratories that conduct R-value tests for home insulation manufacturers or other sellers who use the test results as the basis for making R-value claims about home insulation products.

The Rule requires that those who manufacture or sell thermal insulation products for use in residential structures disclose specific information about the thermal performance of the insulation at

[1] The Commission reviewed the Rule in 1985 under the Regulatory Flexibility Act, 5 U.S.C. 610, to determine the economic impact of the Rule on small entities. Based on that review, the Commission determined that: There was a continuing need for the Rule; there was no basis to conclude that the Rule had a significant impact on a substantial number of small entities; there was no basis to conclude that the Rule should be amended to minimize its economic impact on small entities; the Rule did not generally overlap, duplicate, or conflict with other regulations; and technological, economic, and other changes had not affected the Rule in any way that would warrant amending the Rule. 50 FR 13246 (1985).

[2] Plymouth Foam Products (''Plymouth''), comment number #01; Advanced Foil Systems (''AFS''), #02; W.H. Porter, Inc. (''Porter''), #03; Benchmark Foam, Inc. (''Benchmark''), #04; Big Sky Insulations, Inc. (''Big Sky''), #05; Rock Wool Manufacturing Co. (''Rock Wool Mfg./1''), #06; Rose E. Kettering (''Kettering''), #07; Matt Anderson (''Anderson''), #08; Marilyn Raeth (''Raeth''), #09; James A. McGarry (''McGarry''), #10; Structural Insulated Panel Association (''SIPA''), #11; Tierra Consulting Group (''Tierra''), #12; EPS Molders Association (''EPSMA''), #13; Western Insulfoam, Division of Premier Industries, Inc. (''Western''), #14; Fi-Foil Co., Inc. (''Fi-Foil/Nowman''), #15; Regal Industries, Inc. (''Regal''), #16; Insulation Contractors Association of America (''ICAA/1''), #17; England & Associates (''England''), #18; Cellulose Insulation Manufacturers Association (''CIMA''), #19; GreenStone Industries (''Greenstone/Tranmer''), #20; Styropor Business, BASF Corporation (''BASF''), #21; Hamilton Mfg., Inc. (''Hamilton''), #22; Energy Control, Inc. (''ECI''), #23; North American Insulation Manufacturers Association (''NAIMA''), #24; The Celotex Corporation (''Celotex''), #25; Tennessee Technological University, (''TN Tech''), #26; Superior Aluminum Insulation Inc. (''Superior''), #27; Oak Ridge National Laboratory (''ORNL/Yarbrough''), #28; Oak Ridge National Laboratory (''ORNL/Wilkes''), #29; Polyisocyanurate Insulation Manufacturers Association (''PIMA''), #30; Midwest Roofing Contractors Association (''MRCA''), #31; GreenStone Industries (''GreenStone/Smith''), #32; Insulspan, Inc. (''Insulspan''), #33; Clayville Insulation (''Clayville''), #34; Tascon, Inc. (''Tascon''), #35; FischerSips Inc. (''FischerSips''), #36; Dow Chemical Canada Inc. (''Dow/Canada''), #37; AFM Corporation (''AFM''), #38; Rock Wool Manufacturing Co. (''Rock Wool Mfg./2''), #39; Insulation Contractors Association of America (''ICAA/2''), #40; Corbond Corp. (''Corbond''), #41; Fi-Foil Co., Inc. (''Fi-Foil/Lippy''), #42. The April 6, 1995 notice is filed as document number B172394. The comments submitted in response to the that notice are filed as document numbers B17239400001, B17239400002, *etc.* In today's notice, the comments are cited as #01, #02, *etc.* The Commission's staff added an additional letter from the Petitioner, R. S. Graves, R & D Services, Inc. This letter, cited as Graves, #43, was not filed as a comment in response to the April 6, 1995 notice, but instead, as a response to a request for clarification from the Commission's staff. *See* Part V and note 64, *infra.*

[3] Final trade regulation rule (''Statement of Basis and Purpose'' or ''SBP''), 44 FR 50218 (1979).

the point of sale (on product labels, manufacturers' fact sheets, and receipts or contracts to purchasers from professional installers and new home sellers), and in advertising and other promotional materials that contain certain claims. Thermal performance is described by the product's R-value, which varies among insulation types and forms and among specific products of the same type and form.[4] ''R-value'' is the recognized numerical measure of the ability of an insulation product to restrict the flow of heat and, therefore, to reduce energy costs. The higher the R-value, the better the product's insulating ability. The major reason consumers purchase thermal insulation is to reduce energy expenditures to heat and cool their homes. The Rule requires sellers to have adequate substantiation for these R-value disclosures and for any energy savings claims they make.

The R-value Rule is designed to enable consumers to compare the thermal performance of competing home insulation products when they make purchasing decisions. To accomplish this purpose, the Rule requires sellers (including insulation manufacturers, professional installers, new home sellers, and retailers who sell insulation to consumers) to disclose the insulation product's R-value and related information, based on uniform standards. This information enables consumers to evaluate how well a particular insulation product is likely to perform, to determine whether the cost of the insulation is justified, and to make meaningful cost-benefit purchase decisions among competing products.

III. Regulatory Review

The Commission has determined, as part of its oversight responsibilities, to review all current Commission rules and guides periodically. These reviews seek information about the costs and benefits of the Commission's rules and guides and their regulatory and economic impact. The information obtained assists the Commission in identifying rules and guides that warrant modification or recision. In the April 6, 1995 notice, the Commission solicited comments on, among other things, the economic impact of and the continuing need for the R-value Rule, possible conflict between the Rule and state, local, or other federal laws or regulations, and the effect on the Rule of any technological, economic, or other industry changes. The Commission also solicited comments on whether the Rule should be revised to require the use of different test procedures or standards than those currently specified, and whether there are insulation products for which the Rule does not sufficiently address product-specific issues relating to testing or preparation of test specimens.

A. Need for the Rule, Benefits, Costs, and Other Burdens

1. Current Need for the Rule

Thirty-one comments specifically addressed the current need for the Rule. Thirty comments stated that there is a continuing need for the Rule and supported keeping it in place.[5] Only one commenter, Benchmark, implied that the Rule was not needed, stating that the costs of complying with the Rule far outweigh the benefits it confers.[6] Benchmark did not explain how it reached this conclusion.

Based on the comments, the Commission determines that there is a continuing need for the Rule.

2. Benefits and Costs to Purchasers

Twenty-four comments described the benefits the Rule confers on purchasers.[7] In summary, the comments described the major benefits of the Rule to consumers as:

- Increasing consumer awareness of the benefits of insulation;[8]
- Giving consumers the basic thermal performance information they need to compare insulation products and select those with the R-value they want,[9] at little or no cost;[10]
- Giving consumers R-value information in a uniform manner that facilitates easy comparison of competing products;[11]
- Helping ensure that R-value claims are substantiated so consumers receive what they are promised;[12]
- Helping consumers save energy (and heating and cooling costs) by preventing misrepresentations about R-values of insulation products,[13] and by setting standards for the proper installation of insulation products;[14]
- Saving consumers money by eliminating sales and marketing practices that lead them to overinsulate or underinsulate;[15]
- Improving the quality[16] and consistency[17] of home insulation, encouraging the development of advanced products,[18] and preventing the sale of inferior products;[19] and

[4] ''Type'' refers to the material from which the insulation is made, *e.g.*, fiberglass or cellulose. ''Form'' refers to the physical form of the product, *e.g.*, batts, loose-fill, or rigid boardstock. Most home insulation products are ''mass'' insulations, which restrict the flow of heat through the product's mass. ''Reflective'' insulations (which also are covered by the Rule), on the other hand, restrict heat flow by reflecting back radiant heat and must be installed facing an air space.

[5] AFS, #02 (must stay in place, keep regulations that work); Porter, #03 (continue and strengthen); Rock Wool Mfg./1, #06 (provides basic guidelines by which consumers better assured of receiving full value); Kettering, #07 (R-values must be maintained or consumer has no guideline and inferior products will be passed off on the public); Anderson, #08, at 2–3 (labeling ensures consumers can easily select products with the R-value they want); Raeth, #09 (eliminating Rule would be a great disservice to consumers, consumers would not know the value of what purchasing); McGarry, #10 (do not eliminate or weaken, uses label information to compare when purchasing); SIPA, #11, at 1 (retain); Tierra, #12, at 1–2 (serves useful public purpose); Western, #14, at 1; Fi-Foil/Nowman, #15, at 1 (serves useful purpose); Regal, #16, at 1 (retain); ICAA/1, #17, at 1 (necessary); England, #18, at 1 (need stronger today than ever); CIMA, #19, at 1 (valuable protection for consuming public); Greenstone/Tranmer, #20, at 1 (critical to consumers; centralized labeling requirements necessary to maintain consistency in products, avoid costly production costs resulting from rules differing from region to region, and encourage development of advanced products); BASF, #21, at 1 (urges be retained); Hamilton, #22, at 1 (still needed in today's market); ECI, #23 (good Rule that should be continued); NAIMA, #24, at 1 (should be maintained, market place would be chaotic in its absence); Celotex, #25, at 1 (continuing need), at 7 (supports the Rule); TN Tech, #26, at 1 (extremely important to industry and consuming public); ORNL/Wilkes, #29, at 1 (supports keeping, Commission to be commended for promulgating and enforcing the Rule); PIMA, #30, at 2 (continuing need), at 9 (vigorously supports retaining and enforcing Rule and applauds FTC for its efforts in this regard); Greenstone/Smith, #32, at 1 (provides a viable means of creating broader consumer awareness of insulation value and maintaining even playing field, without Rule sellers would take advantage of naive consumers); Insulspan, #33, at 1 (retain); Clayville, #34, at 3 (still needed to keep a level playing field); FischerSips, #36, at 1 (retain); Fi-Foil/Lippy, #42 (should be continued to enable general public to evaluate insulation products). *See* also, Rock Wool Mfg./1, #06 (fully supports ICAA's submittal).

[6] Benchmark, #04.

[7] Porter, #03; Rock Wool Mfg./1, #06; Anderson, #08, at 2–3; McGarry, #10; Tierra, #12, at 1–2; Western, #14, at 1; Fi-Foil/Nowman, #15, at 1; ICAA/1, #17, at 1; England, #18, at 1; CIMA, #19, at 1; Greenstone/Tranmer, #20, at 1; Hamilton, #22, at 1; TN Tech, #26, at 1; ORNL/Wilkes, #29, at 1–2; PIMA, #30, at 2–3, 9; Greenstone/Smith, #32, at 1; Clayville, #34, at 1; Celotex, #35, at 1; Fi-Foil/Lippy, #42. See also, Rock Wool Mfg./1, #06; Kettering, #07; Raeth, #09; ECI, #23; NAIMA, #24, at 1.

[8] ORNL/Wilkes, #29, at 1; Greenstone/Smith, #32, at 1.

[9] Anderson, #08, at 2–3; McGarry, #10; Greenstone/Tranmer, #20, at 1; PIMA, #30, at 2–3; Fi-Foil/Lippy, #42. *See* Raeth, #09; ECI, #23.

[10] ICAA/1, #17, at 1. *See also* Rock Wool Mfg./1, #06.

[11] Tierra, #12, at 1–2; Fi-Foil/Nowman, #15, at 1; England, #18, at 1; PIMA, #30, at 3; Celotex, #35, at 1.

[12] Porter, #03; Tierra, #12, at 1–2; England, #18, at 1; Hamilton, #22, at 1. *See* Kettering, #07; Raeth, #09; ECI, #23; NAIMA, #24, at 1.

[13] Porter, #03. *See* Rock Wool Mfg./1, #06.

[14] *See* Rock Wool Mfg./1, #06.

[15] CIMA, #19, at 1.

[16] TN Tech, #26, at 1.

[17] Greenstone/Tranmer, #20, at 1.

[18] Id.

[19] *See* Kettering, #07.

• Reducing the rate of depletion of our nation's limited energy resources by helping consumers conserve energy expenditures.[20]

In addition to the benefits described above, Greenstone/Smith explained that utility companies have embraced the Rule and developed their own energy savings programs that depend on the Rule to protect consumers from fraudulent acts.[21] Greenstone/Smith also stated that state departments of consumer affairs have used the Rule as a model in writing their laws, which has led to state enforcement actions that generated publicity and educated consumers. Greenstone/Smith further stated that consumers would be in a user-beware condition without the Rule and that sellers would lower their ethical boundaries and take advantage of naive consumers.[22]

Sixteen commenters addressed the costs the Rule imposes on purchasers. Fifteen of these commenters stated that they did not believe the Rule imposes significant costs on purchasers.[23] Only one, Benchmark, stated that the costs imposed by the Rule outweigh the Rule's benefits.[24] In brief, the commenters other than Benchmark expressed the following views concerning costs the Rule imposes on consumers:

• no cost;[25]

• Minimal or insignificant cost,[26] or small cost when spread over volume of production;[27]

• Very small cost imposed is offset by improved product quality and the benefit-to-cost ratio is very large;[28]

• Any cost already has been born by manufacturers and is embedded in product pricing;[29]

• Required testing should already have been done so the only additional cost is the Fact Sheet, which can be produced at minimal expense;[30]

• Possibly has imposed cost, but not nearly the waste of money that would have occurred without the Rule;[31] and

• Has saved consumers on cost.[32]

Based on the comments, the Commission determines that the Rule provides substantial benefits to consumers, while imposing no significant costs on them.

3. Benefits and Burdens or Costs to Firms

Ten comments addressed the benefits provided to firms covered by the Rule.[33] According to the comments, the Rule benefits firms by:

• Creating a level playing field through standardized guidelines for labeling, testing, and evaluation, which promote legitimate competition and make it easier for honest manufacturers to compete;[34]

• Providing a more even market place in which it is easier for industry to attempt to regulate itself;[35]

• Enhancing competition by enabling suppliers to convey truthfully and meaningfully the insulation properties of their products;[36] and

• Providing guidelines for product testing and evaluation and creating confidence in the residential buyer's mind.[37]

As pointed out in Part III.A.2, above, Greenstone/Smith stated that individual utility companies have developed energy savings programs that depend on the Rule to protect consumers from fraudulent acts.[38] According to the commenter, by encouraging consumers to insulate homes, these programs benefit firms by generating an ever-increasing demand for products covered by the Rule.

Fourteen comments addressed the burdens or costs imposed on firms covered by the Rule. Eleven of these stated that the Rule had not imposed any significant costs on firms.[39] Tierra stated merely that any costs due to the Rule already were imbedded in the pricing of the products.[40] Fi-Foil/Nowman stated that the Rule had a substantial economic impact on industry members originally because it required redesigning and reprinting packaging and promotional materials to meet the labeling requirements, but that these costs already had been borne by manufacturers.[41] Benchmark stated that the costs imposed by the Rule outweigh its benefits.[42]

Based on the comments, the Commission determines that the Rule benefits firms by creating a level playing field that promotes competition, by providing a market place in which industry can more easily regulate itself, by providing guidelines to industry for product testing and evaluation, and by creating consumer confidence. The Commission also determines that the Rule does not impose significant ongoing costs on firms.

B. Other Federal, State, or Local Laws or Regulations

Nine comments addressed the existence of other federal, state, or local laws or regulations. None of the commenters was aware of any conflicts with other federal, state, or local laws or regulations.[43] England stated that the Rule strengthens other federal, state, and local laws and regulations.[44] Celotex and PIMA explained that the Rule is a consumer protection regulation, which does not address issues such as building energy conservation standards that are regulated elsewhere at the federal, state, and local levels.[45] Greenstone/Smith stated that the Rule has been precedent-setting rather than conflicting, and that

[20] ORNL/Wilkes, #29, at 1.

[21] Greenstone/Smith, #32, at 1.

[22] *Id. See also* NAIMA, #24, at 1; ORNL/Wilkes, #29, at 2.

[23] Rock Wool Mfg./1, #06; Tierra, #12, at 2; Western, #14, at 1; Fi-Foil/Nowman, #15, at 1; ICAA/1, #17, at 1; England, #18, at 1; CIMA, #19, at 1; Greenstone/Tranmer, #20, at 2; Hamilton, #22, at 1; Celotex, #25, at 1; TN Tech, #26, at 1; ORNL/Wilkes, #29, at 2–3; PIMA, #30, at 3, 9; Greenstone/Smith, #32, at 1; Clayville, #34, at 1.

[24] Benchmark, #04.

[25] Rock Wool Mfg./1, #06; ICAA/1, #17, at 1; CIMA, #19, at 1; Hamilton, #22, at 1.

[26] Celotex, #25, at 1; TN Tech, #26, at 1; PIMA, #30, at 3, 9; Clayville, #34, at 1.

[27] Greenstone/Tranmer, #20, at 2; ORNL/Wilkes, #29, at 2–3.

[28] TN Tech, #26, at 1. *See* Greenstone/Tranmer, #20, at 2.

[29] Tierra, #12, at 2; Fi-Foil/Nowman, #15, at 1.

[30] Greenstone/Smith, #32, at 1.

[31] Western, #14, at 1.

[32] England, #18, at 1.

[33] Porter, #03; Tierra, #12, at 1–2; Western, #14, at 1, *but see*, at 2; England, #18, at 2; Greenstone/Tranmer, #20, at 3; Celotex, #25, at 2; PIMA, #30, at 2, 4, 9; Greenstone/Smith, #32, at 1; Clayville, #34, at 1, 3. *See* NAIMA, #24, at 1.

[34] Porter, #03; Tierra, #12, at 1–2; Western, #14, at 1, *but see*, at 2 (not much benefit for Western); Greenstone/Tranmer, #20, at 3; Celotex, #25, at 2; Clayville, #34, at 3. *See also* NAIMA, #24, at 1 (marketplace would be chaotic in its absence).

[35] England, #18, at 2.

[36] PIMA, #30, at 2.

[37] Id. at 4.

[38] Greenstone/Smith, #32, at 1 .

[39] Rock Wool Mfg./1, #06 (not aware of any significant added cost); Western, #14, at 2 (for it $0); ICAA/1, #17, at 1 (no significant cost burden); England, #18, at 2 (none, because what Rule requires should be done anyway); CIMA, #19, at 2 (few incremental costs of compliance since requirements are based on existing industry and government standards); Greenstone/Tranmer, #20, at 3 (does not impose large financial burden); Hamilton, #22, at 1 (do not think it has imposed additional costs); Celotex, #25, at 2 (no significant burdens or costs since R-value data is necessary for marketing, quality control, and research purposes); PIMA, #30, at 4 (no significant burdens or costs, benefits clearly outweigh any burdens or costs), at 9 (does not impose significant burden or cost); Greenstone/Smith, #32, at 1 (required testing should already have been done when Commission issued Rule and no additional tests were required, only additional cost was Fact Sheet which could be produced at minimal expense to manufacturer); Clayville, #34, at 1 (doesn't believe the Rule has imposed any excessive costs on manufacturers or contractors).

[40] Tierra, #12, at 2.

[41] Fi-Foil/Nowman, #15, at 1.

[42] Benchmark, #04.

[43] Rock Wool Mfg./1, #06; Tierra, #12, at 3; Western, #14, at 3; England, #18, at 2; CIMA, #19, at 2; Greenstone/Tranmer, #20, at 4; Celotex, #25, at 2; PIMA, #30, at 5; Greenstone/Smith, #32, at 1.

[44] England, #18, at 2 .

[45] Celotex, #25, at 2; PIMA, #30, at 5.

utility companies have embraced the Rule's requirements and developed energy-saving programs that depend on the Rule to protect consumers from fraudulent acts.[46]

Based on the comments, the Commission determines that there is no reason to believe that the Rule conflicts with other federal, state, or local laws or regulations.

IV. Adoption of Current ASTM Standards

The Rule currently requires that the R-value of each home insulation product be determined based on tests conducted according to ASTM C 177–85, C 236–87, C 518–85, or C 976–82.[47] It requires that R-values based upon heat flux measurements under C 177–85 or C 518–85 be reported in accordance with ASTM standard practice C 1045–85. It also requires that, for loose-fill cellulose, the tests be conducted at the settled density determined under ASTM C 739–88 (''Standard Specification for Cellulosic Fiber (Wood-Base) Loose-Fill Thermal Insulation'').[48]

Four comments discussed which versions of specified ASTM test procedures or other standards should be required by the Rule. Celotex and PIMA recommended that the Commission revise the Rule to require the use of current versions of required ASTM standards that are incorporated into the Rule. Specifically, they recommended that the Commission amend the Rule to require use of the following versions of ASTM standards: ASTM C 177–85 (1993), ASTM C 236–89 (1993), ASTM C 518–91, ASTM C 976–90, ASTM C 1045–90.[49] NAIMA recommended that the Commission revise section 460.5(a)(2) to require settled density testing of loose-fill cellulose according to C 739–91.[50] No comments opposed adoption of these current versions of the ASTM standards.

NAIMA pointed out that an alternative to referencing current versions of ASTM standards would be to omit the specific version and rely on the language in section 460.7 of the Rule, 16 CFR 460.7.[51] Section 460.7 provides that updated, final ASTM test methods automatically replace the old ones in the Rule 90 days after publication by ASTM. Greenstone/Smith agreed with this approach.[52]

ASTM was organized in 1898. A not-for-profit organization, it is one of the largest voluntary standards-development organizations in the world. ASTM's members (approximately 36,000 worldwide) include producers, users, ultimate consumers, and those having a general interest (including government and academia). Through 132 standards-writing committees, ASTM publishes more than 9,500 standards each year. Membership in ASTM is open to all interested parties concerned with the fields in which ASTM is active.[53] ASTM standards are developed through a consensus-type process and are used voluntarily. They become legally binding only when a government body references them in regulations, or when they are cited in a contract. ASTM standards are subject to revision at any time by the responsible technical committee and must be reviewed every five years, and if not revised, either reapproved or withdrawn.[54] ASTM's C–16 Committee on Thermal Insulation is the standards-writing committee responsible for virtually all of the ASTM standards referenced in the R-value Rule.

Section 460.7 of the Rule provides for automatic incorporation into the Rule of revisions to these ASTM test procedures. As part of this automatic incorporation, the Commission originally cited in the Rule only the basic test procedures and other standards, not the specific version of each then in effect. Under section 460.7, when ASTM changed a test procedure required by the Rule, the new version automatically replaced the old one in the Rule 90 days after ASTM first published the change.[55] In 1990, the Commission amended the Rule to specify the version of each ASTM test procedure that would be required in the future. 55 FR 10053 (1990). The Commission explained that, because it previously had taken no action to consider any of the revisions to the required test procedures that ASTM had adopted since the Commission promulgated the Rule, the Commission in effect had adopted the revised procedures. *Id*. at 10054.

The Office of the Federal Register (''OFR'') specifies additional procedures that federal agencies must follow when they promulgate rules requiring the use of private standards that are not printed in full in the Code of Federal Regulations (''CFR'') (i.e., when they incorporate private standards by reference). Section 51.1(f) of OFR's regulations states that incorporation by reference is limited to the edition of the publication that is approved by the Director of the Federal Register. 1 CFR 51.1(f). Section 51.9 of OFR's regulations requires that each ''incorporation by reference'' in a federal rule specifically identify the standard to be incorporated, including the title, date, edition, author, publisher, and identification number of the publication. 1 CFR 51.9.

Under Federal Register requirements, therefore, the Commission does not have discretion to require compliance generally with the ''latest'' or ''current'' version of ASTM test procedures or other standards. If ASTM adopts and publishes revised test procedures or other standards required by the Rule, however, the Commission may update its incorporation by reference of these standards by obtaining permission for the incorporation by reference from the Director of the Federal Register and publishing an amendment to the Rule that requires the use of the revised standard in the future.

ASTM standards C 177–85, C 236–87, C 518–85, C 976–82, C 1045–85, and C 739–88, which currently are specified in the Rule, have been revised by ASTM since the Commission adopted those versions of the standards in 1990.[56] Because the Commission has taken no action to consider any of the revised standards adopted by ASTM, and has received no petitions to consider them, section 460.7 of the Rule has authorized, but not required, use of the revised ASTM standards for compliance with the Rule.

Based on the comments and the text of the revised versions of the ASTM standards recommended by the commenters, the Commission believes that these revisions to the versions of the standards currently required by the Rule have been primarily technical changes or editorial comments, and not significant, substantive revisions. The

[46] Greenstone/Smith, #32, at 1.

[47] In citations of ASTM standards, the letter and first series of numbers refer to the basic standard; the number following the hyphen refers to the version of the standard (denoting the year in which the version was adopted and published by ASTM).

[48] This section discusses only the comments that recommended the Commission revise the Rule concerning specific ASTM test procedures and other standards that currently are required by the Rule. It does not discuss the comments that recommended the Commission adopt additional or different ASTM or other test procedures or standards that are not currently required by the Rule. *See* Part VI, *infra*.

[49] Celotex, #25, at 3; PIMA, #30, at 5. Both comments stated that the 1993 revisions to C 177–85 and C 236–89 (the year 1993 is indicated in parentheses in the standards) were editorial only.

[50] NAIMA, #24, at 2.

[51] *Id*. at 7.

[52] Greenstone/Smith, #32, at 3.

[53] 1995 Annual Book of ASTM Standards, Section 4, Volume 04.06 (Thermal Insulation; Environmental Acoustics), at iii.

[54] *Id*. at iv.

[55] Under section 460.7, the Commission's staff or a person affected by the change can petition the Commission during the 90-day period not to adopt the change or to reopen the rulemaking proceeding to consider it further.

[56] 55 FR 10053 (1990).

Commission, therefore, amends the Rule to require use of the revised, current versions of these standards that are published in volume 04.06, section 4, of the 1995 Annual Book of ASTM Standards. Because the revisions appear to be technical changes or editorial comments, not significant, substantive revisions, the Commission determines that these amendments are non-substantive under section 18(d)(2)(B) of the FTC Act, 15 U.S.C. 57a(d)(2)(B).

The amendments require that all future tests by manufacturers or others to substantiate R-value claims for home insulation products be based on the revised standards. Manufacturers or others whose home insulation products have not changed can continue to rely on tests conducted according to the versions of the standards that were required by the Rule at the time the tests were conducted. Under section 460.7 of the Rule, in the future the Commission will accept, but not require, the use of a revised version of any of these standards 90 days after ASTM adopts and publishes the revision. The Commission may, however, reopen the rulemaking proceeding during the 90-day period or at any later time to consider whether it should require use of the revised procedure or reject it under section 460.5 of the Rule, 16 CFR 460.5.

V. Proposed Non-Substantive Amendment to Allow Use of an Additional ASTM R-value Test Procedure

In the April 6, 1995 notice, the Commission also solicited comments on the Petition from Ronald S. Graves, Research Staff Member, Materials Analysis Group, at Martin Marietta Energy Systems, Inc.[57] The Petition requested that the Commission include an additional (fifth) ASTM R-value test procedure (''ASTM C 1114–92—Standard Test Method for Steady-State Thermal Transmission Properties by Means of the Thin-Heater Apparatus''), as an approved test method for complying with section 460.5(a) of the R-value Rule, 16 CFR 460.5(a). This test method is under the jurisdiction of ASTM Committee C–16 on Thermal Measurements (the ASTM Committee responsible for the other R-value test procedures required by the R-value Rule), and is the direct responsibility of ASTM Subcommittee C16.30 on Thermal Measurements. Mr. Graves is the Chairman of the Thin Heater Task Group within C16.30 that meets semiannually to maintain and keep ASTM C 1114 current.

Based on the documentation submitted with the Petition, the Commission stated its belief that the accuracy of the ASTM C 1114–92 test procedure compared favorably to that of other ASTM R-value test procedures the Commission has adopted under the R-value Rule.[58] The Commission, therefore, stated that it was considering adopting a non-substantive amendment to section 460.5(a) of the Rule to include ASTM C 1114–92 as an optional, but not required, test procedure for determining the R-value of home insulation. Because the proposed amendment would not impose any new obligations upon parties covered by the Rule, or lessen the protections afforded consumers by the Rule, the Commission stated that the proposed change appeared to be non-substantive under section 18(d)(2)(B) of the FTC Act, 15 U.S.C. 57a(d)(2)(B). For these reasons, the Commission stated that it did not have to solicit public comment or follow the rulemaking proceedings that would be required for a substantive amendment to the Rule. On the other hand, because the Commission was soliciting comments as part of its regulatory review of the Rule, as a matter of discretion the Commission determined to solicit comments on the Petition at the same time.

Twelve comments addressed the proposed adoption of ASTM C 1114–92 as an optional R-value test procedure. Nine comments recommended that the Commission adopt the test procedure or said that they had no objections.[59] Of these, Regal stated that the adoption of the test procedure was ''appropriate.'' Celotex and PIMA stated that the test procedure has shown excellent correlation to the R-value test procedures currently required by the Rule. ORNL/Wilkes stated that the test procedure is a test method that has proven minimal uncertainty, high reproducibility, and broad applicability to a variety of existing and advanced insulation materials.

Three comments expressed reservations about the proposed adoption of ASTM C 1114–92. Rock Wool Mfg./1 agreed that the Commission's proposal to adopt the test procedure would be appropriate, if the Commission is assured that the results are comparable with other required tests.[60] Western stated that adding C 1114–92 may help reduce burdens or costs imposed by the Rule,[61] but later responded specifically to the issue of adopting the test procedure with ''no comment.''[62] MRCA expressed concern that the test procedure would replace ASTM tests C 177 and C 518, that only two pieces of equipment currently are available to conduct the C 1114 test, that available test equipment is proprietary, and that more labs should use the equipment to obtain comparable test results before the FTC accepts the procedure.[63]

The Commission has determined to adopt a non-substantive amendment to allow use of ASTM C 1114–95 as an optional, but not required, test method for determining the R-value of home insulation under section 460.5(a) of the R-value Rule.[64] Based on the data submitted with the Petition and the comments, the Commission believes that the accuracy of the ASTM C 1114–95 test procedure compares favorably with the other ASTM R-value test procedures the Commission has adopted under the R-value Rule. Because the amendment imposes no new obligations upon parties covered by the Rule (but merely recognizes the use of an optional R-value test procedure), and because the accuracy of the test procedure compares favorably to the test procedures already required by the Rule, the Commission has determined that this amendment is non-substantive under section 18(d)(2)(B) of the FTC Act, 15 U.S.C. 57a(d)(2)(B).

VI. Other Issues

In addition to the subjects discussed above, the comments raised numerous other issues relating to the Rule. For example:

- Whether the scope of the Rule should be expanded to cover insulation sold for use in the commercial market, the thermal efficiency of building systems (such as insulation used in structural panels), or new products

[57] 60 FR at 17493–94. Martin Marietta Energy Systems, Inc., operates Oak Ridge National Laboratory (''ORNL'') as a contractor for the U.S. Department of Energy. The Petition, plus attachments, has been placed on the public record of the R-value Rule, File No. R811001, and can be inspected at the Commission's Public Reference Room, Room 130, Sixth Street and Pennsylvania Avenue, NW, Washington, DC.

[58] The Commission noted that C 1114–92 had been adopted as an official ASTM standard and, therefore, it appeared that the industry recognized it as an accurate and appropriate test procedure.

[59] Tierra, #12, at 1–3; Fi-Foil/Nowman, #15, at 1; Regal, #16, at 1; England, #18, at 4; Hamilton, #22, at 3; Celotex, #25, at 6; PIMA, #30, at 8; Fi-Foil/Lippy, #42; ORNL/Wilkes, #29, at 2.

[60] Rock Wool Mfg./1, #06.

[61] Western, #14, at 2.

[62] *Id.* at 3.

[63] MRCA, #31, at 1–2.

[64] ASTM published revised version C 1114–95 of the standard in August 1995, after the comment period ended. According to the petitioner, the revised version contains merely technical, housekeeping changes. The Commission, therefore, considers the documentation in support of the Petition and the comments to apply to revised version C 1114–95. Graves, #43.

(such as cellulose batts, cotton batts, cotton loose-fill, stabilized cellulose);

- Whether the Rule should require different or new procedures or specify additional requirements for preparing test specimens for certain types of insulation products (such as aging cellular plastics insulations, determining the long-term density of loose-fill mineral fiber insulations);
- Whether the Rule should take into consideration additional factors that can affect the thermal performance of specific products in actual use (such as temperature differences, the effect of convection during winter conditions); and
- Whether the Rule should impose additional requirements on manufacturers or installers to help consumers ensure that the requisite amount of insulation has been installed in their homes.

Adopting the commenters' recommendations to cover, for example, additional products and to create new Rule requirements would require substantive amendments under section 18(d)(2)(B) of the FTC Act, 15 U.S.C. 57a(d)(2)(B). In addition, some of the comments suggested requiring the use of specific proposed ASTM test procedures when ASTM adopts them as final procedures. Because these test procedures are not yet final ASTM standards, it is premature for the Commission to consider requiring that they be used to determine the R-values of home insulation products.

The Commission is continuing to review the issues raised by the comments and the most efficient and effective methods of dealing with them, which may not necessarily include further rulemaking. For example, the Commission could bring enforcement actions against specific companies whose practices are not covered by the Rule, but who are engaging in unfair or deceptive acts or practices under section 5 of the FTC Act, 15 U.S.C. 45. Another option might be for the Commission to provide affected industry members informal guidance instead of adopting substantive amendments to the Rule. The Commission will address these other issues in other notices or forums.

VII. Exemptions

Section 18(g)(2) of the FTC Act, 15 U.S.C. 57a(g)(2), authorizes the Commission to exempt a person or class of persons from all or part of a trade regulation rule if the Commission finds that application of the rule is not necessary to prevent the unfair or deceptive acts or practices to which the rule relates. Since the R-value Rule became effective, the Commission, in response to petitions from industry representatives, has granted exemptions from specific requirements of the Rule to certain classes of sellers. The Commission granted these exemptions after soliciting public comment.

Although the Commission published the exemptions in the Federal Register, the exemptions are not cited in the text of the Rule in the Code of Federal Regulations. To assist industry members in understanding their responsibilities under the Rule, the Commission has determined to amend the Rule to include a summary of the exemptions as an Appendix to the Rule. These non-substantive amendments do not alter the requirements of the Rule. They merely summarize the previously-granted exemptions as an Appendix to the Rule for easier reference. Industry members should review the decisions published in the Federal Register where the Commission granted the exemptions for a more complete description of the scope of the exemptions. The summaries in the Appendix include the citations to those decisions.

A. Manufacturers of Perlite Insulation

The Commission granted the first exemption in response to a petition from a trade association representing manufacturers of perlite insulation products, 46 FR 22179 (1981). The petitioner requested that the Commission exempt manufacturers of perlite insulation from sections 460.12(b)(2) and 460.13(c)(1) of the Rule, 16 CFR 460.12(b)(2), 460.13(c)(1), which require that they disclose on labels and fact sheets the minimum weight per square foot of perlite insulation products that is necessary to achieve a specific R-value.

The Rule's label and fact sheet disclosure requirements were based on the fact that, for most insulation products, as the density increases, the R-value per unit of thickness increases. The Rule, therefore, requires that sellers of loose-fill insulations, including perlite, disclose the minimum weight per square foot that is required to achieve the density and thickness necessary for the claimed total R-value. Unlike other insulation products, however, as the density of most perlite insulation increases, the R-value per unit of thickness decreases. Thus, if these perlite insulations are installed at densities greater than the thicknesses and weights per square foot listed on their labels and fact sheets, the consumer may not receive the claimed R-values. The petitioner requested that the label and fact sheet disclosure requirements be changed to require disclosure of maximum weight per square foot.

The Commission exempted manufacturers of perlite insulation products that have an inverse relationship between R-value and density or weight per square foot from the requirements in sections 460.12(b)(2) and 460.13(c)(1) of the Rule that they disclose minimum weight per square foot for R-values listed on labels and fact sheets. The exemption is conditioned upon the alternative disclosure in labels and fact sheets of the maximum weight per square foot for each R-value listed. All other requirements of the Rule apply to sellers of these perlite home insulation products.

B. Manufacturers of Rigid, Flat-Roof Insulation

The Commission granted the second exemption in response to petitions filed by four manufacturers of rigid, flat-roof insulation products and two trade associations representing such manufacturers, 46 FR 22180 (1981). One of the trade associations and all four manufacturers requested an exemption from all requirements of the Rule for rigid, flat-roof insulation products that are used in flat, built-up roofs. The other trade association limited its request to an exemption from the labeling requirements of section 460.12 of the Rule, 16 CFR 460.12.

The petitioners stated that more than 95 percent of the rigid, flat-roof insulation boards sold were used in commercial or industrial buildings and, therefore, were not covered by the Rule. They acknowledged, however, that some of the products were used in multi-family residential buildings, such as flat-roof apartments or condominium buildings. The petitioners stated that manufacturers have no way of knowing which products would be used in residential applications. If manufacturers were required to label all products for residential use according to the Rule, they would be required to assume the unnecessary expense of labeling every package of insulation even though only a small percentage would be used in residential applications. Furthermore, since these products were used primarily in large, multi-family, flat-roof buildings, petitioners asserted that the labeling information was unnecessary because the product generally would be selected by an architect or another professional, not the ultimate consumer.

The Commission exempted manufacturers of rigid, flat-roof insulation products that are used in flat, built-up roofs from the requirement in

section 460.12 that all insulation products that might be used in residential buildings be labeled with required R-value information. All other requirements of the Rule apply to sellers of these products.

C. New Home Sellers

The Commission granted the third exemption in response to a petition filed by a trade association representing new home sellers, 48 FR 31192 (1983). The petitioner requested that new home sellers be exempted from certain requirements of sections 460.18 and 460.19 of the Rule, 16 CFR 460.18, 460.19. Section 460.18 requires that advertisements and other promotional materials that make certain claims about a home insulation product include specific disclosures. Section 460.19 requires that ads and other promotional materials that claim home insulation can cut fuel bills or fuel use (''energy savings claims'') include specific disclosures, and that advertisers have a reasonable basis for the claims and maintain records substantiating the claims.

The Commission determined that certain disclosures in new home advertisements and other promotional materials, which would have been required by the Rule, were not necessary to prevent the unfair or deceptive acts or practices to which the Rule relates. The Commission, therefore, exempted new home sellers from:

(1) The requirement, under section 460.18(a), that they disclose the type and thickness of the insulation when they make a representation about the R-value of the insulation in a new home;

(2) the requirement that they disclose the R-value explanatory statement under section 460.18(a) or the savings explanatory statement under section 460.19(b), conditioned upon the new home seller alternatively disclosing the appropriate explanatory statement in the sales contract along with the disclosures required by section 460.16, 16 CFR 460.16; [65]

(3) the requirement that they make the disclosures specified in section 460.19(c) if they claim that insulation, along with other products in a new home, will cut fuel bills or fuel use; and

(4) the requirement that they include the reference to fact sheets when they must disclose the R-value explanatory statement or the savings claim explanatory statement under sections 460.18(a) or 460.19(b), respectively.

These exemptions also apply to home insulation sellers other than new home sellers (such as home insulation manufacturers) when they participate with a new home seller to advertise and promote the sale of new homes, provided that the primary thrust of the advertisement or other promotional material is the promotion of new homes, and not the promotion of the insulation product. All other requirements of the Rule, including the section 460.19 substantiation and recordkeeping requirements for energy savings claims made in ads and other promotional materials, apply to new home sellers and those who participate with a new home seller to advertise and promote the sale of new homes or home insulation products.

VIII. Summary of Commission's Determinations

For the reasons set forth in this notice, the Commission: [66] (1) retains the R-value Rule; (2) adopts a non-substantive amendment to section 460.5(a) of the Rule to allow the use of ASTM C 1114–95 as an optional, but not required, test procedure to determine the R-value of home insulation; (3) adopts non-substantive amendments to sections 460.5(a), 460.5(a)(2), 460.5(b), and 460.5(d)(1) of the Rule to require the use of ASTM C 177–85 (1993), ASTM C 236–89 (1993), ASTM C 518–91, ASTM C 976–90, ASTM C 1045–90, and ASTM C 739–91 to determine the R-value of home insulation; (4) adopts a non-substantive amendment to add an Appendix to the Rule, summarizing the exemptions from specific requirements of the Rule that the Commission previously granted for certain classes of persons covered by the Rule; and (5) adopts a non-substantive amendment to revise section 460.10 to cross-reference the Commission's enforcement policy statement for foreign language advertising in 16 CFR 14.9 and to delete the current Appendix to the Rule, which merely repeats the text of 16 CFR 14.9.

List of Subjects in 16 CFR Part 460

Advertising, Incorporation by reference, Insulation, Labeling, Trade practices.

Text of Amendments

Accordingly, the Commission amends 16 CFR Part 460 to read as follows:

PART 460—[AMENDED]

1. The authority citation for Part 460 is amended to read as follows:

Authority: 15 U.S.C. 41 *et seq.*

2. In section 460.5, the introductory text, paragraph (a) introductory text, paragraphs (a)(2) and (b), paragraph (d) introductory text and paragraph (d)(1) are revised to read as follows:

§ 460.5 R-value tests.

R-value measures resistance to heat flow. R-values given in labels, fact sheets, ads, or other promotional materials must be based on tests done under the methods listed below. They were designed by the American Society of Testing and Materials (ASTM). The test methods are:

(a) All types of insulation except aluminum foil must be tested with ASTM C 177–85 (Reapproved 1993), ''Standard Test Method for Steady-State Heat Flux Measurements and Thermal Transmission Properties by Means of the Guarded-Hot-Plate Apparatus;'' ASTM C 236–89 (Reapproved 1993), ''Standard Test Method for Steady-State Thermal Performance of Building Assemblies by Means of a Guarded Hot Box;'' ASTM C 518–91, ''Standard Test Method for Steady-State Heat Flux Measurements and Thermal Transmission Properties by Means of the Heat Flow Meter Apparatus;'' ASTM C 976–90, ''Standard Test Method for Thermal Performance of Building Assemblies by Means of a Calibrated Hot Box;'' or ASTM C 1114–95, ''Standard Test Method for Steady-State Thermal Transmission Properties by Means of the Thin-Heater Apparatus.'' The tests must be done at a mean temperature of 75° Fahrenheit. The tests must be done on the insulation material alone (excluding any airspace). R-values (''thermal resistance'') based upon heat flux measurements according to ASTM C 177–85 (Reapproved 1993) or ASTM C 518–91 must be reported only in accordance with the requirements and restrictions of ASTM C 1045–90, ''Standard Practice for Calculating Thermal Transmission Properties from Steady-State Heat Flux Measurements.'' These incorporations by reference were approved by the Director of the Federal Register in accordance with 5 U.S.C. 552(a) and 1 CFR Part 51. Copies of the test procedures and standard practice may be obtained from the American Society of Testing and Materials, 1916 Race Street, Philadelphia, PA 19103.

[65] Under section 460.19(d), ads or other promotional materials that otherwise would require both the R-value explanatory statement under section 460.18(a) and the savings claim explanatory statement under section 460.19(b) need only contain the savings claim explanatory statement. This option applies under the exemption to new home sellers who choose to make the explanatory statement in the sales contract instead of in the ad or other promotional material.

[66] In addition to the amendments described in the text of this notice, the Commission also adopts a non-substantive amendment to section 460.10 and removes the current Appendix (''Enforcement Policy Statement for Foreign Language Advertising''). Section 460.10 previously required compliance with the disclosure requirements described in the Appendix. The Appendix simply reprinted 16 CFR 14.9. Amended section 460.10 refers directly to 16 CFR 14.9, eliminating unnecessary duplication.

Copies may be inspected at the Federal Trade Commission, Public Reference Room, Room 130, Sixth Street and Pennsylvania Ave., NW, Washington, DC, or at the Office of the Federal Register, 800 North Capital St., NW, suite 700, Washington, DC.

(1) * * *

(2) For loose-fill cellulose, the tests must be done at the settled density determined under paragraph 8 of ASTM C 739–91, ''Standard Specification for Cellulosic Fiber (Wood-Base) Loose-Fill Thermal Insulation.'' This incorporation by reference was approved by the Director of the Federal Register in accordance with 5 U.S.C. 552(a) and 1 CFR Part 51. Copies of the test procedure may be obtained from the American Society of Testing and Materials, 1916 Race Street, Philadelphia, PA 19103. Copies may be inspected at the Federal Trade Commission, Public Reference Room, Room 130, Sixth Street and Pennsylvania Ave., NW, Washington, DC, or at the Office of the Federal Register, 800 North Capital St., NW, suite 700, Washington, DC.

* * * * *

(b) Aluminum foil systems with more than one sheet must be tested with ASTM C 236–89 (Reapproved 1993) or ASTM C 976–90, which are incorporated by reference in paragraph (a) of this section. The tests must be done at a mean temperature of 75° Fahrenheit, with a temperature differential of 30° Fahrenheit.

* * * * *

(d) For insulation materials with foil facings, you must test the R-value of the material alone (excluding any air spaces) under the methods listed in paragraph (a) of this section. You can also determine the R-value of the material in conjunction with an air space. You can use one of two methods to do this:

(1) You can test the system, with its air space, under ASTM C 236–89 (Reapproved 1993) or ASTM C 976–90, which are incorporated by reference in paragraph (a) of this section. If you do this, you must follow the rules in paragraph (a) of this section on temperature, aging and settled density.

* * * * *

3. Section 460.10 is revised to read as follows:

§ 460.10 How statements must be made.

All statements called for by this regulation must be made clearly and conspicuously. Among other things, you must follow the Commission's enforcement policy statement for clear and conspicuous disclosures in foreign language advertising and sales materials, 16 CFR 14.9.

4. The ''Appendix to Part 460—Enforcement Policy Statement for Foreign Language Advertising'' is removed.

5. A new Appendix is added, to read as follows:

Appendix to Part 460—Exemptions

Section 18(g)(2) of the Federal Trade Commission Act, 15 U.S.C. 57a(g)(2), authorizes the Commission to exempt a person or class of persons from all or part of a trade regulation rule if the Commission finds that application of the rule is not necessary to prevent the unfair or deceptive acts or practices to which the rule relates. In response to petitions from industry representatives, the Commission has granted exemptions from specific requirements of 16 CFR Part 460 to certain classes of sellers. Some of these exemptions are conditioned upon the performance of alternative actions. The exemptions are limited to specific sections of Part 460. All other requirements of Part 460 apply to these sellers. The exemptions are summarized below. For an explanation of the scope and application of the exemptions, see the formal Commission decisions in the Federal Register cited at the end of each exemption.

(a) Manufacturers of perlite insulation products that have an inverse relationship between R-value and density or weight per square foot are exempted from the requirements in sections 460.12(b)(2) and 460.13(c)(1) that they disclose minimum weight per square foot for R-values listed on labels and fact sheets. This exemption is conditioned upon the alternative disclosure in labels and fact sheets of the maximum weight per square foot for each R-value required to be listed. 46 FR 22179 (1981).

(b) Manufacturers of rigid, flat-roof insulation products used in flat, built-up roofs are exempted from the requirements in section 460.12 that they label these home insulation products. 46 FR 22180 (1981).

(c) New home sellers are exempted from:

(1) the requirement in section 460.18(a) that they disclose the type and thickness of the insulation when they make a representation in an advertisement or other promotional material about the R-value of the insulation in a new home;

(2) the requirement that they disclose in an advertisement or other promotional material the R-value explanatory statement specified in section 460.18(a) or the savings explanatory statement specified in section 460.19(b), conditioned upon the new home sellers alternatively disclosing the appropriate explanatory statement in the sales contract along with the disclosures required by section 460.16;

(3) the requirement that they make the disclosures specified in section 460.19(c) if they claim that insulation, along with other products in a new home, will cut fuel bills or fuel use; and

(4) the requirement that they include the reference to fact sheets when they must disclose the R-value explanatory statement or the savings claim explanatory statement under sections 460.18(a) or 460.19(b), respectively.

The exemptions for new home sellers also apply to home insulation sellers other than new home sellers when they participate with a new home seller to advertise and promote the sale of new homes, provided that the primary thrust of the advertisement or other promotional material is the promotion of new homes, and not the promotion of the insulation product. 48 FR 31192 (1983).

By direction of the Commission.

Donald S. Clark,

Secretary.

[FR Doc. 96–7528 Filed 3–27–96; 8:45 am]

BILLING CODE 6750–01–P

---

16 CFR Parts 801 and 802

Premerger Notification; Reporting and Waiting Period Requirements

AGENCY: Federal Trade Commission.

ACTION: Final rule.

SUMMARY: The Commission amends the premerger notification rules that require the parties to certain mergers or acquisitions to file reports with the Federal Trade Commission and the Assistant Attorney General in charge of the Antitrust Division of the Department of Justice and to wait a specified period of time before consummating such transactions. The reporting and waiting period requirements are intended to enable these enforcement agencies to determine whether a proposed merger or acquisition may violate the antitrust laws if consummated and, when appropriate, to seek a preliminary injunction in federal court to prevent consummation.

These amendments consist of five rules that define or create exemptions to the requirements imposed by the Hart-Scott-Rodino Act. These rules clarify the types of transactions that are in the ordinary course of business of the parties to the transaction and are exempt under section 7A(c)(1) of the Hart-Scott-Rodino Act. They also provide several new exemptions under section 7A(d)(2)(B) for certain types of acquisitions of realty and carbon-based mineral reserves that are not likely to violate the antitrust laws. These rules are designed to reduce the compliance burden on the business community by eliminating the application of the notification and waiting requirements to a significant number of transactions that are unlikely to violate the antitrust laws. They will also allow the enforcement agencies to focus their resources more effectively on those transactions that present the potential for competitive harm.

EFFECTIVE DATE: April 29, 1996.

FOR FURTHER INFORMATION CONTACT: John M. Sipple, Jr., Assistant Director, or Melea R. Epps, Attorney, Premerger Notification Office, Bureau of Competition, Room 303, Federal Trade Commission, Washington, DC 20580. Telephone: (202) 326–3100.

SUPPLEMENTARY INFORMATION:

Regulatory Flexibility Act

These amendments to the Hart-Scott-Rodino premerger notification rules are designed to reduce the burden of reporting on the public. The Commission has determined that none of the rules is a major rule, as that term is defined in Executive Order 12291. The amendments will not result in any of the following: an annual effect on the economy of $100 million or more; a major increase in costs or prices for consumers, individual industries, Federal, State, or local government agencies, or geographic regions; or significant adverse effects on competition, employment, investment, productivity, innovation, or on the ability of United States-based enterprises to compete with foreign-based enterprises in the domestic market. None of the amendments expands the coverage of the premerger notification rules in a way that would affect small business. Therefore, pursuant to § 605(b) of the Administrative Procedure Act, 5 U.S.C. 605(b), as added by the Regulatory Flexibility Act, Pub. L. 96–354 (September 19, 1980), the Federal Trade Commission has certified that these rules will not have a significant economic impact on a substantial number of small entities. Section 603 of the Administrative Procedure Act, 5 U.S.C. 603, requiring a final regulatory flexibility analysis of these rules, is therefore inapplicable.

Background

Section 7A of the Clayton Act (''the act''), 15 U.S.C. 18a, as added by sections 201 and 202 of the Hart-Scott-Rodino Antitrust Improvements Act of 1976, requires parties to certain acquisitions of assets or voting securities to give advance notice to the Federal Trade Commission (hereafter referred to as ''the Commission'') and the Assistant Attorney General in charge of the Antitrust Division of the Department of Justice (hereafter referred to as ''the Assistant Attorney General''). The parties must then wait certain designated periods before the consummation of such acquisitions. The transactions to which the advance notice requirement is applicable and the length of the waiting period required are set out respectively in subsections (a) and (b) of section 7A. This amendment to the Clayton Act does not change the standards used in determining the legality of mergers and acquisitions under the antitrust laws.

The legislative history suggests several purposes underlying the act. Congress wanted to ensure that certain acquisitions were subjected to meaningful scrutiny under the antitrust laws prior to consummation. To this end, Congress intended to eliminate the ''midnight merger'' that is negotiated in secret and announced just before, or sometimes only after, the closing takes place. Congress also provided an opportunity for the Commission or the Assistant Attorney General (who are sometimes hereafter referred to as the ''antitrust agencies'' or the ''enforcement agencies'') to seek a court order enjoining the completion of those transactions that either agency has reason to believe would present significant antitrust problems. Finally, Congress sought to facilitate an effective remedy when a challenge by one of the enforcement agencies proved successful. Thus, the act requires that the antitrust agencies receive prior notification of certain acquisitions, provides tools to facilitate a prompt, thorough investigation of the competitive implications of these acquisitions, and assures the enforcement agencies an opportunity to seek a preliminary injunction before the parties to an acquisition are legally free to consummate it. The problem of unscrambling the assets after the transaction has taken place is thereby reduced.

Subsection 7A(d)(1) of the act, 15 U.S.C. 18a(d)(1), directs the Commission, with the concurrence of the Assistant Attorney General and in accordance with 5 U.S.C. 553, to require that the notification be in such form and contain such information and documentary material as may be necessary and appropriate to determine whether the proposed transaction may, if consummated, violate the antitrust laws. Subsection 7A(d)(2) of the act, 15 U.S.C. 18a(d)(2), grants the Commission, with the concurrence of the Assistant Attorney General and in accordance with 5 U.S.C. 553, the authority to (a) define the terms used in the act, (b) exempt from the act's notification and waiting period requirements additional classes of persons or transactions which are not likely to violate the antitrust laws, and (c) prescribe such other rules as may be necessary and appropriate to carry out the purposes of section 7A.

The Commission, with the concurrence of the Assistant Attorney General, promulgated implementing rules (''the rules'') and the Notification and Report Form (the ''Form'') and issued an accompanying Statement of Basis and Purpose, all of which were published in the Federal Register of July 31, 1978, 43 FR 33451, and became effective on September 5, 1978.

The rules are divided into three parts which appear at 16 CFR Parts 801, 802, and 803. Part 801 defines a number of the terms used in the act and rules, and explains which acquisitions are subject to the reporting and waiting period requirements. Part 802 contains a number of exemptions from these requirements. Part 803 explains the procedures for complying with the act. The Form, which is completed by persons required to file notification, is an appendix to Part 803 of the rules.

Changes of a substantive nature have been made to the premerger notification rules or Form on eleven occasions since they were first promulgated: 44 FR 66781 (November 21, 1979); 45 FR 14205 (March 5, 1980); 46 FR 38710 (July 29, 1981); 48 FR 34427 (July 29, 1983); 50 FR 38742 (September 24, 1985); 51 FR 10368 (March 28, 1986); 52 FR 7066 (March 6, 1987); 52 FR 20058 (May 29, 1987); 54 FR 21425 (May 18, 1989); 55 FR 31371 (August 2, 1990); and 60 FR 40704 (August 9, 1995). The current amendments interpret the act and expand the current policies of the Commission's Premerger Notification Office regarding transactions in the ordinary course of business that are exempt from the notification and waiting requirements of the act. They also include several new exemptions for acquisitions of certain types of real property assets and carbon-based mineral reserves.

Comments

These amendments reflect extensive analysis of comments received in response to the notice of proposed rulemaking published by the Federal Trade Commission, in consultation with the Assistant Attorney General, in the Federal Register of July 28, 1995, 60 FR 38930. The notice contained the current amendments in a proposed form and provided 60 days for interested persons to submit comments on the proposed rules. During the 60-day period 29 comments were received. In addition, three new comments and one supplemental comment were received after the expiration of the comment period. The commenters are identified below.

Number of comment	Commenter	Date of comment
1	American Council of Life Insurance.	9/7/95
2	Heller Ehrman White & McAuliffe.	9/15/95
3	Pillsbury, Madison & Sutro on behalf of Chevron Corporation.	9/26/95
4	The Perkin-Elmer Corporation.	9/21/95
5	Atlantic Richfield Company.	9/27/95
6	Pillsbury, Madison & Sutro.	9/25/95
7	General Motors Corporation.	9/28/95
8	Boult, Cummings, Conners & Berry.	9/28/95
9	Section of Antitrust Law of the American Bar Association.	9/29/95
10	Federal Express	9/28/95
11	Ford Motor Company	9/28/95
12	BellSouth Corporation ...	9/28/95
13	Equipment Leasing Association of America.	9/29/95
14	Ronald A. Bloch of McDermott, Will & Emery.	9/29/95
15	Arter & Hadden on behalf of Kennecott Corporation.	9/29/95
16	U.S. Chamber of Commerce.	9/29/95
16A	U.S. Chamber of Commerce (Supplemental Comments).	11/9/95
17	Rinehart & Associates, Investment Forestry.	9/28/95
18	Timberland Investment Services, LLC.	9/28/95
19	O'Melveny & Myers on behalf of Marriott International, Inc..	9/29/95
20	American Hospital Association.	9/29/95
21	Weil, Gotschal & Manges.	9/29/95
22	Latham & Watkins	9/29/95
23	International Council of Shopping Centers.	9/29/95
24	Colorado Oil & Gas Association.	9/29/95
25	ITT Corporation	9/27/95
26	American Hotel & Motel Corporation.	9/29/95
27	American Transport Association of America.	9/29/95
28	National Independent Energy Producers.	9/29/95
29	Latham & Watkins on behalf of Host Marriott Corporation.	10/6/95
30	Forest Investment Associates.	9/28/95
31	National Association of Real Estate Investment Trusts.	11/2/95
32	Association of Private Pension and Welfare Plans.	2/1/96

The commenters generally favored the adoption of the exemptions but also advocated the expansion of certain of the proposals to include exemptions for other types of transactions which, they argued, raise few competitive concerns. The final amendments contain revisions to the proposed rule that address certain commenters' concerns and exclude from the reporting requirements additional transactions that the Commission and the Assistant Attorney General found were unlikely to violate the antitrust laws. A few of the comments contained suggestions that were outside the scope of the proposed rulemaking; these suggestions may be considered by the Commission in future rulemaking efforts.

Statement of Basis and Purpose for the Commission's Revisions to the Premerger Notification Rules

Authority: The Federal Trade Commission, with the concurrence of the Assistant Attorney General, promulgates these amendments to the premerger notification rules pursuant to section 7A(d) of the Clayton Act, 15 U.S.C. 18a(d), as added by section 201 of the Hart-Scott-Rodino Antitrust Improvements Act of 1976, Pub. L. 94–435, 90 Stat. 1390.

The five amendments to the premerger notification rules—§§ 802.1, 802.2, 802.3, 802.4, and 802.5—describe certain types of acquisitions that are exempt or are not exempt from the notification requirements of the act. They replace and expand existing § 802.1, which describes certain applications of the exemption granted by section 7A(c)(1) of the act for acquisitions of goods or realty transferred in the ordinary course of business. Revisions to § 801.15 define when the aggregation rules apply to acquisitions covered by these rules.

Criteria for the Rules. Section 7A(c)(1) of the act exempts ''acquisitions of goods or realty transferred in the ordinary course of business.'' Existing § 802.1(a) interprets this statutory language to apply the exemption to acquisitions of voting securities of entities holding only realty. Existing § 802.1(b) denies the exemption to the sale of goods or real property of an entity if they constitute ''all or substantially all of the assets of that entity or an operating division thereof'' unless the entity qualifies for the exemption under existing § 802.1(a) because its assets consist solely of real property and assets incidental to the ownership of real property.

The reportability of transfers in the ordinary course of business has long been a frequent source of questions from the public to the Premerger Notification Office. Amended § 802.1 represents interpretations of section 7A(c)(1) made by the Premerger Notification Office over the years, and it also broadens these interpretations to exempt additional classes of acquisitions of goods that qualify as transfers in the ordinary course of business and thus are unlikely to violate the antitrust laws.

Amended § 802.1(a) preserves the concept of existing § 802.1(b) and makes the exemption unavailable for acquisitions of all or substantially all of the assets of an operating unit. Operating unit is defined as ''assets that are operated by the acquired person as a business undertaking in a particular location or for particular products or services.'' The sale of all or substantially all of the assets of a business undertaking is generally equivalent to the sale of a business. Amended § 802.1(a) recognizes that acquisitions that transfer the equivalent of a business are not in the ordinary course and thus are not exempt from the prior notification obligations of the act.

Amended § 802.1 also defines categories of acquisitions of goods that are deemed to be in the ordinary course of business and are therefore exempt from the notification requirements. Individual review of transactions such as typical acquisitions of new goods and current supplies is generally unnecessary because buying and selling goods is the essence of manufacturing, wholesaling, and retailing businesses. Sales in the ordinary course of business should not in any way diminish the capacity of the selling firm to compete.

Amended § 802.1 provides that certain acquisitions of used durable goods qualify for exemption from the reporting requirements as transfers of goods in the ordinary course of business. These exemptions for specific types of acquisitions of used durable goods acknowledge that certain transfers of productive assets that are not the sale of an operating unit are made in the ordinary course of business. For example, an equipment leasing company may be acquiring used durable goods as current supplies, or the seller may be replacing these assets to increase or upgrade capacity and to improve efficiencies. However, many used durable goods acquisitions involving productive assets are not within the ordinary course of business and thus are not exempt under § 802.1.

New §§ 802.2 (concerning real property assets) and 802.3 (concerning carbon-based mineral reserves) are based on the Commission's authority in section 7A(d)(2)(B) of the act to exempt transactions that are unlikely to violate the antitrust laws. These sections

provide exemptions for certain acquisitions of assets that are abundant and are used in markets that are generally unconcentrated. These two factors make it unlikely that a transfer of these types of assets will have anticompetitive effects. It is thus not necessary to examine each individual transaction to determine if it will violate the antitrust laws.

To accommodate parties who choose to structure their transactions as acquisitions of voting securities rather than as acquisitions of the underlying assets, new § 802.4 exempts acquisitions of voting securities of issuers holding assets of two types: (1) assets, the direct acquisition of which is exempted by section 7A(c)(2) of the act or §§ 802.2, 802.3 or 802.5 of the rules, and (2) assets, the direct acquisition of which is not exempt by section 7A(c)(2) of the act or §§ 802.2, 802.3 or 802.5 of the rules, that are valued at $15 million or less. The exemption for the acquisition of the voting securities of an issuer holding assets, the acquisition of which is exempt under section 7A(c)(2)—bonds, mortgages, deeds of trust and other obligations that are not voting securities—is designed to provide the same treatment for the direct acquisition of such assets (a transaction which is already exempt from the reporting requirements) and the acquisition of the voting securities of an issuer holding these assets.

New § 802.5 exempts acquisitions of investment rental property assets, the acquisition of which is not already exempted by § 802.2. Section 802.5 is based on the use to which buyers will put the acquired assets. The Commission believes that the acquisition of investment rental property assets—defined in § 802.5(b) as real property that, except for limited circumstances, will be rented only to entities not included within the acquiring person and will be held solely for rental or investment purposes—is unlikely to violate the antitrust laws.

Sections 802.1 through 802.5 are based on the Commission's authority in section 7A(d)(2)(A) of the act to ''define the terms used in [section 7A]'' and sections 7A(d)(2) (B) and (C) to ''exempt . . . transactions which are not likely to violate the antitrust laws'' and to ''prescribe such other rules as may be necessary and appropriate to carry out the purposes of [section 7A].'' These exemptions, of course, relate only to premerger reporting, and transactions exempted from the reporting requirements by the new rules remain subject to the antitrust laws.

The Commission is aware that even with the significant coverage of the new rules, the exempt status of many transactions will remain unaddressed. These rules do not and are not intended to interpret or apply to the entire statutory exemption created by section 7A(c)(1). For example, certain acquisitions of credit card receivables may qualify for exemption as transfers in the ordinary course of business. Persons who desire advice on the exempt status of any transfer of goods, realty or other assets may contact the Premerger Notification Office, Bureau of Competition, Room 303, Federal Trade Commission, Washington, DC 20580, or phone (202) 326–3100.

I. Section 802.1: Acquisitions of Goods and Realty in the Ordinary Course of Business

Section 7A(c)(1) of the act exempts ''acquisitions of goods or realty transferred in the ordinary course of business.'' Amended § 802.1 provides that an acquisition of all the assets of an operating unit is not an acquisition in the ordinary course of business. It also defines certain acquisitions of goods that are in the ordinary course of business and therefore exempt from the reporting requirements. This section primarily covers exemptions for certain acquisitions of goods. Exemptions for the acquisition of certain types of realty are set out in new § 802.2. The realty exemptions are not subject to the exclusion for acquisitions of an operating unit.

Amended § 802.1 defines four categories of acquisitions of goods: acquisitions of an operating unit, acquisitions of new goods, acquisitions of current supplies, and acquisitions of used durable goods. The section states whether and under what circumstances each type of acquisition is exempt. These four categories of asset acquisitions are not comprehensive. As noted above, some asset acquisitions may not fit neatly into any of these defined categories.

Amended § 802.1 has four paragraphs: Paragraph (a) denies the ordinary course of business exemption to any transfer of goods and realty that is equivalent to the sale of a business. The next three paragraphs define acquisitions of goods that may be exempt. Paragraph (b) exempts the acquisition of new goods, and paragraph (c) exempts the acquisition of current supplies. Paragraph (d) defines certain transfers of used durable goods that are within the ordinary course of business. These include: (1) transfers to and from bona fide dealers, resellers or lessors; (2) transfers by an acquired person that has replaced the productive capacity of the assets being sold; and (3) transfers by an acquired person that has outsourced the management and administrative support services provided by the goods being sold.

In determining whether a given acquisition of goods and realty is in the ordinary course of business and is therefore exempt under a provision of amended § 802.1, one must first determine if the assets are substantially all of the assets of an operating unit. If the assets being sold comprise all or substantially all of the assets of an operating unit of the seller, the inquiry ends there, and the acquisition is not exempt as a transfer of goods or realty in the ordinary course of business. If the assets do not constitute all or substantially all of the assets of an operating unit, then the goods should be classified as either new goods, current supplies or used durable goods.

The organization of § 802.1 is intended to make it easier to identify routine acquisitions that meet the criteria of section 7A(c)(1) for an exemption as an acquisition of goods transferred in the ordinary course of business. Sales of new goods and purchases of current supplies are frequent. The objective of the businesses covered by paragraphs (b) and (c) is to buy, sell or lease such goods and supplies; thus such transactions meet the common meaning of transfers in the ordinary course of business. Exempting these transactions facilitates acquisitions of new goods that normally expand the supply of products or expand productive capacity and therefore do not tend to lessen competition. In contrast, acquisitions of entire operating units are not within the common meaning of ''ordinary course'' and have the potential to concentrate productive capacity and thereby diminish competition.

Proposed § 802.1 addressed only exemptions for acquisitions of goods in the ordinary course of business. Acquisitions of realty in the ordinary course of business are also exempted, pursuant to section 7A(c)(1) of the act. Section 802.2 covers certain exemptions for acquisitions of realty, and it is possible that acquisitions of realty other than those identified in § 802.2 are transfers of real property in the ordinary course of business that are exempt. Language added to § 802.1 concerning realty makes the provision consistent with the exemption provided in section 7A(c)(1).

A. *Operating Unit.* Amended § 802.1(a) excludes from the ordinary course of business exemption any acquisition of all or substantially all of the assets of an ''operating unit.'' As defined by the amended provision, an

operating unit is a collection of assets that has been operated as a business undertaking and that may include goods, realty and other types of property. Amended § 802.1(a) also indicates that operating units are not necessarily separate legal entities. A determination of which groups of assets constitute an operating unit within a company will vary significantly among businesses, because the manner in which businesses are organized is company-specific. Thus, examples of operating units include, but are not limited to, regional divisions, company branches, international operations, a hospital, a retail store, a factory or a processing facility.

The definition of operating unit indicates that the assets that comprise the unit are operated ''in a particular location or for particular products or services.'' Proposed § 802.1(a) defined an operating unit as assets operated ''in a particular geographic area or for particular products or services.'' The word ''location'' was substituted for ''geographic area'' since a single location of a company's business, *i.e.*, a manufacturing plant, a retail store, a funeral home, constitutes an operating unit. Each location of a company's operations is viewed as a separate business undertaking, and the purchase of all of the assets of one of a company's stores or production facilities is not a transaction within the ordinary course of business. Because amended § 802.1(a) no longer uses the term ''geographic area,'' the determination of which of the seller's operations comprise an operating unit is no longer dependent in part upon whether certain locations are sufficiently proximate to comprise a business undertaking in a particular geographic area. Example 1 to § 802.1 illustrates that an operating unit consists of one grocery store within a company's chain of stores.

A key factor in determining whether a group of assets being sold constitutes an operating unit is whether the seller, as a result of the sale, will cease to sell particular products or provide particular services from a specific location or will exit the business of selling particular products or providing particular services. The operating unit definition specifically excludes references to relevant product markets and relevant geographic markets. Thus, a section 7 antitrust analysis is unnecessary and inappropriate in determining whether assets being sold comprise an operating unit for purposes of determining whether notification is required.

Another probative factor in determining whether a group of assets constitutes an operating unit is whether the seller derived third party revenues from the use of the assets. In certain cases, this factor may distinguish an operating unit from a set of assets that have been used solely to provide management and administrative support services, such as in-house accounting or billing services, that generate no third party revenues directly but support the seller's business operations.

Amended § 802.1(a) uses the term ''operating unit'' rather than the term ''operating division'' used in existing § 802.1(b). The latter term has created some uncertainty because certain business entities use the term ''division'' in a manner that may not be consistent with this rule. For example, a business might use the term ''division'' to designate an unincorporated administrative segment of its enterprise, such as the ''East Coast Division'' or the ''Tri-State Division,'' that provides support functions to the business'' manufacturing activities. Such usage is designed to serve the needs of the business. The term ''operating unit'' has been adopted in order to make clear that the application of the rule is not dependent on the terminology used by a business.

Comment 11 suggested that § 802.1(a) be revised to focus on whether the seller is exiting a line of business or a geographic area. However, the wording of amended § 802.1(a) makes no explicit reference to the seller's exit from a line of business or geographic area. As discussed above, this provision no longer emphasizes the operation of a business undertaking in a particular geographic area; instead, the focus is on the location of a specific business undertaking. Also, while the seller's exit from a business segment can be a major indication that certain assets constitute an operating unit, it is not that only possible indication. The extent to which the assets are used to generate third party revenues is also an important factor and may determine that a group of assets comprises an operating unit, even though there may be disagreement as to whether the seller is actually exiting a business segment. For example, the sale of revenue generating assets at a specific location can be the sale of an operating unit even if the seller is continuing in that line of business at other locations.

Comment 11 also suggested that the operating unit should be defined as assets operated by the acquired person as a business undertaking including all similar products or services offered by the acquired person, or all operations in a geographic area. Interpretation of the terminology ''similar products or services'' could require a complicated analysis of the seller's products to determine whether the assets being sold were used to manufacture those products of the seller that were sufficiently different from the seller's other products to deem that an operating unit was being transferred. Thus, the suggested language was not adopted in order to avoid the necessity of such an analysis.

B. *New Goods.* Amended § 802.1(b) describes the type of acquisitions of goods that are most commonly referred to as acquisitions ''in the ordinary course of business.'' This paragraph exempts acquisitions of new goods, which are typically routine sales of inventory by manufacturers, wholesalers or retailers conducted in the ordinary course of business.

Proposed § 802.1(b) exempted acquisitions of new goods ''produced by the acquired person for sale, or * * * held by the acquired person solely for resale.'' The proposed rule did not exempt any acquisitions of goods from a seller that purchased or produced the goods for his own use but decided to sell the goods without using them. This language was eliminated from amended § 802.1(b) in order to simplify the rule. Further, the change addresses a concern raised by Comment 21 that the proposed rule would not exempt acquisitions of new equipment from companies that ordered the equipment for their own use but discovered before or upon delivery that they could not use the equipment. The Commission has concluded that such sales should be exempt because sales of new equipment that are not part of the sale of an operating unit are not likely to raise an antitrust concern, even though the equipment may have been purchased by the seller for use. As a result of the deletion of this language, the rule no longer focuses on the purpose for which the acquired person holds the new goods. The exemption is also available for acquisitions of goods that the seller in good faith considers to be new, even though he may have used the goods for demonstration purposes, customer trials or other purposes that are incidental to the sale of the goods. The term ''new'' implies that the goods have not been used to generate income.

Comments 9, 13 and 21 suggested that an exemption be included for acquisitions of new goods produced or held for lease. Amended § 802.1(b) adopts this suggestion by exempting acquisitions of new goods regardless of the purpose for which the goods were produced or acquired. As a result, an equipment leasing company that sells new inventory that it has been unable to lease may avail itself of the exemption as long as the inventory of new goods

does not constitute an operating unit of the company.

The exemption set forth in paragraph (b) does not apply to any acquisition of new goods which are sold as part of a transaction that includes all or substantially all of the assets of an operating unit. This limitation on the exemption of new goods would apply even if all the assets transferred were new goods held solely for the purpose of resale. For example, if a marine supply wholesaler purchased the entire inventory of another marine supply wholesaler which owned only an extensive inventory of hundreds of items from different manufacturers, the acquisition would not be exempt, even though the sale is composed entirely of new goods. The sale of all of its inventory would be considered the sale of all or substantially all of its business since the primary assets of such a wholesaling business are inventory.

C. *Current Supplies.* Amended § 802.1(c) describes another category of asset acquisitions—the acquisition of ''current supplies''—that qualifies for the ordinary course exemption. ''Current supplies'' is a new term to the rules and is described in subparagraphs (1), (2) and (3). Current supplies include goods bought solely for the purpose of resale or leasing to an entity not included within the acquiring person, raw materials, components, maintenance supplies and the like. Current supplies are generally purchased frequently and are used for inventory by the purchaser, consumed in the daily conduct of business or incorporated into a final product. Current supplies may also consist of used durable goods, discussed in new § 802.1(d), which, for example, may be purchased as inventory by equipment leasing companies or used equipment dealers. However, acquisitions of current supplies are not in the ordinary course of business if they are acquired as part of an acquisition of all or substantially all the assets of an operating unit.

In proposed § 802.1(c), the term ''current supplies'' explicitly excluded used durable goods. Amended § 802.1(c) now redefines ''current supplies'' to eliminate this exclusion, as suggested by Comments 9 and 21. Although ''used durable goods'' are addressed explicitly in § 802.1(d), the Commission recognizes that used assets, as well as new assets, may meet the definition of ''current supplies'' in § 802.1(c). Parties are permitted to claim the exemption even if the goods purchased are not new, so long as the acquired goods are to be held for third-party resale or lease, are to be consumed by the buyer, or are otherwise incorporated in the acquiring person's final product.

Amended § 802.1(c)(1) includes additional language to make clear that the exemption does not apply unless the goods being acquired will be resold or leased to an entity that is not within the acquiring person. The addition prevents a buyer from claiming the exemption for the acquisition from a competitor of used productive equipment which the buyer in turn resells or leases to a subsidiary.

The used durable goods provision, § 802.1(d), contains a provision exempting the acquisition of the category of goods described in proposed § 802.1(c)(1) as goods acquired for the purpose of resale or leasing. The language of amended § 802.1(c)(1) has been changed largely to mirror the language of the comparable provision in the used durable goods exemption, § 802.1(d)(1). Read together, the amended provisions exempt, with certain exceptions, acquisition of new goods and used durable and non-durable goods that are acquired and held solely for the purpose of resale or leasing to entities not within the acquiring person.

Amended § 802.1(c) also adds goods acquired for lease to the categories of assets comprising current supplies. These changes, also suggested in Comments 9 and 21, make the exemption available for inventory purchases of equipment by leasing companies.

The acquisition of current supplies is unlikely to create or extinguish a competitive entity and is therefore exempt unless acquired as part of an acquisition of an operating unit. In applying paragraph (c), the focus is on the business of the acquiring person to determine if the exemption is available.

D. *Used Durable Goods.* Amended § 802.1(d) provides that certain acquisitions of used durable goods qualify for the ordinary course of business exemption. The term ''used durable good'' is new to the rules currently in force. It is defined as a used good which was ''designed to be used repeatedly and has a useful life greater than one year.'' The Commission recognizes that sales of used durable goods often meet a common sense definition of transfers of goods in the ordinary course of business and that some categories of used durable goods acquisitions lack competitive significance. Sales of such used durable goods may be routine and considered by parties to be in the ordinary course of their businesses. Sales of used durable goods may also facilitate the purchase of a new generation of equipment that will increase the productive capacity of a business.

Paragraph (d) represents an attempt to identify certain categories of transfers of used durable goods that meet a common sense definition of ''ordinary course'' and appear unlikely to violate the antitrust laws: (1) when the goods are being acquired and held solely for the purpose of resale or leasing to an entity not within the acquired person; (2) when the goods are being acquired from an acquired person holding the goods solely for resale or leasing to an entity not within the acquired person; (3) when the acquired person is replacing or upgrading the productive capacity provided by the goods being sold; and (4) when the acquired person is outsourcing the management and administrative support services provided by the goods being sold.

An acquisition of used durable goods is exempt as within the ordinary course of business if two requirements are satisfied. The first requirement is that they must not be acquired as part of an acquisition of an operating unit as defined in § 802.1(a). Thus, if the used durable goods constitute, or are being acquired as part of a group of assets that constitute, a business undertaking in a particular location or for particular products or services, the ordinary course exemption does not apply.

The second requirement for exempting an acquisition of a used durable good is that any one of four criteria set forth in the amended rule must be satisfied. The first criterion, that the goods must be acquired and held solely for the purpose of resale or leasing to an entity not within the acquiring person (*i.e.*, current supplies as the term is used in § 802.1(c)(1)), and the second, that the acquired person must have held the goods at all times solely for resale or leasing to an entity not within the acquired person, represent an exemption for dealers whose business is to purchase and sell used goods and for equipment leasing companies which buy used goods for leasing purposes. After considerable assessment of the necessity and applicability of § 802.1(d)(1) and (2), the Commission believes that the exemption should be included to allow dealers to make transfers within the ordinary course of their business, in good faith transactions conducted on their own behalf, without having to observe the reporting and waiting requirements. However, the Commission will closely monitor such transactions to ensure that the exemption is not being used as a ploy by two or more parties acting in concert to circumvent the notification requirements of the act.

Comment 9 recommended that proposed § 802.1(d)(1) and (2) apply even when the acquiring person is an intermediary, since dealers often search for used equipment at the request of the ultimate buyer. The Commission declines to adopt this recommendation, which would permit potentially anticompetitive transfers of used equipment to occur without a reporting requirement if the dealer brokers the transaction for the seller or the ultimate buyer. Thus, the exemption is unavailable if the person making the acquisition is in reality an intermediary for either the seller or another person who intends to hold the goods (see Example 6 to § 802.1). This limitation attempts to forestall abuse of the dealer exemption by requiring notification in circumstances where the dealer is acting as a broker or an agent for a purchaser or a seller. In these instances, the dealer generally does not take beneficial ownership of the goods and thus is not actually acquiring the goods. The true parties to the acquisition—the seller and the person that will have beneficial ownership of the goods as a result of the acquisition—should be subject to the notification requirements.

In proposed § 802.1(d), the first criterion, (d)(1), limited the exemption to purchases of goods acquired and held solely for resale, and the second criterion, (d)(2), exempted acquisitions of goods purchased from a seller who had acquired and held the goods solely for resale. Amended § 802.1(d) exempts acquisitions of goods acquired and held solely for the purpose of resale or leasing and acquisitions of goods from a seller who had acquired and held the goods solely for resale or leasing. The provision now exempts inventory purchases and sales by leasing companies of used durable goods that they have leased or held for lease to third parties, as long as the goods are not being purchased or sold as part of the transfer of an operating unit. Such transactions are within the ordinary course of business of leasing companies, which typically acquire goods for leasing and sell goods which they have held for leasing. The revisions address concerns raised in Comments 6, 11, 13, 16 and 21 about the inclusion in the used durable goods provisions of exemptions for sales and purchases of leased goods.

Amended § 802.1 (d)(1) and (d)(2) change the language of the proposals to clarify that the exemptions within these provisions are available only if (1) the buyer acquires the goods to resell or lease to an entity that is not within it, or (2) the buyer acquires goods that the seller has held only to resell or lease to entities not within it. As noted above, this change was also made to § 802.1(c)(1), one of the current supplies provisions.

In proposed and amended § 802.1(d)(2), the exemption applies only if the goods are acquired from an acquired person who held the goods *solely* for resale or leasing. The limitation that the goods be held *solely* for resale or lease is designed to guard against transfers by a seller who has used the goods to maintain a competitive presence and is now selling productive capacity.

The third criterion in § 802.1(d) recognizes that it is in the ordinary course of business for a company to replace or upgrade productive capacity and to sell the capacity it is replacing. Thus, an exemption is permitted for the sale of used durable goods if all or substantially all of the productive capacity of these goods is being replaced. Such replacements may result in an increase in the acquired person's productive capacity or manufacturing efficiencies. The exemption will not apply unless the acquired person has already replaced the capacity or taken definitive steps to replace the capacity of the goods being sold. In addition, these steps must have been taken in good faith; this requirement prevents sham contracts that the acquired person cancels after transferring the productive capacity without observing the notification requirements and without replacing the capacity.

Proposed § 802.1(d)(3) imposed no time limit between the replacement of the capacity and the sale of the capacity being replaced. However, a key factor in determining whether the goods being sold represent productive capacity that has been or will be replaced is whether the sale is sufficiently contemporaneous with the past or future purchase of replacement goods such that the goods being sold represent a bona fide sale of replaced capacity. To insure that the replacement of capacity is sufficiently contemporaneous, § 802.1(d)(3) has been modified to require either that the capacity has been replaced within the six months prior to the sale of the goods being replaced, or that a contract has been executed in good faith to replace the capacity within six months.

Proposed § 802.1(d)(3) allowed use of the exemption if the acquired person had executed either a contract, agreement in principle or letter of intent to replace the capacity of the goods being sold. The exemption now requires an executed contract for the purchase of the replacement equipment, since only the contract imposes a binding obligation on the seller to acquire the equipment to replace the capacity of the goods being sold.

Normally companies that intend to remain in a particular business do not sell capacity prior to replacing that capacity or making contractual arrangements to replace the capacity. If the replacement of capacity is not sufficiently proximate to the sale of the goods representing the capacity replaced, a firm could experience an absence from the market that would have a detrimental effect on its competitive position. The six-month windows will permit firms to integrate the new replacement equipment into its operations for a reasonable period of time before selling the used equipment. The six-month windows will also allow a company to operate without the replacement capacity but only for a brief period of time so as not to affect adversely its competitive presence in the market.

The rule allows replacement of the productive capacity of the used durable goods being sold by acquisition or by lease. No minimum lease term is specified; however, in order for an acquisition of the goods being replaced to be in the ordinary course of business, the replacement goods must be leased for a period that is substantially long enough to maintain or increase the company's productive capacity. Such a period is industry specific and must be determined in good faith by the acquired person. Because this provision requires that all or substantially all of the productive capacity be replaced, the exemption is lost if the replacement goods result or will result in more than a de minimis decrease in the acquired person's capacity or an exit from a line of business in which the acquired person currently operates.

The fourth criterion permits an exemption for sales of used durable goods if (1) the goods are used by the acquired person solely to provide management and administrative support services for the acquired person's business operations, and (2) the acquired person has in good faith executed a contract to outsource the management and administrative support services provided by the goods being sold. Management and administrative support services include services such as accounting, legal, purchasing, payroll, billing and repair and maintenance of the acquired person's own equipment. For example, a company that has equipment in-house to provide its administrative data processing needs may decide that it would be more cost effective to have a third party provide these services. To accomplish this objective, the company

may enter into a contract with a third party for these services and sell all of the equipment it used internally to provide this function. Such transfers appear unlikely to pose any competitive concern.

Proposed § 802.1(d)(4) used the term ''auxiliary functions'' to describe the services provided by the goods being sold. That term has been changed in new § 802.1(d)(4) to ''management and administrative support services.'' This term is more descriptive and conveys more clearly that these services support the business operations of the acquired person and are not integral to the person's business operations.

The rule does not define ''management and administrative support services'' but instead lists certain services that are included within that term and other services that are not included.

Although companies will sometimes outsource the manufacturing of some products they market, the sale of used durable goods that were used to manufacture those products does not qualify for exemption under this provision. Manufacturing, including the manufacturing of inputs for other products produced by the acquired person, is not a management and administrative support service within the meaning of this exemption. Thus, if a company decides to sell the equipment it had used to manufacture a product, even if it had entered into a contract for a third party to manufacture the product, the sale of that equipment is not exempt under § 802.1(d)(4). The loss of the company's control over the manufacturing of the product may raise competitive concerns warranting investigation by the enforcement agencies.

In the Statement of Basis and Purpose to the proposed rules, research and development, testing and warehousing were listed as auxiliary support functions. The Commission does not consider these activities to be management and administrative support services; they are integral to a company's product design, development, production and distribution and thus are tied directly to the competitive business activities of the company. In an analysis of a given industry, these activities may have a significant impact on issues involving innovation, entry and product distribution.

The exemption requires that the goods have been used ''solely'' to provide the acquired person with management and support services for its business operations. The transfer of goods that solely provide internal management and administrative support services does not constitute the acquisition of an operating unit. A company division that only provides management and administrative support services to the company's operating units is not itself an operating unit; it supports or benefits the company's operating units. For example, in a company containing a division that only provides the company's internal data processing needs, that division would be deemed to provide management and administrative support services. The limitation on the sale of an operating unit contained in § 802.1(a) would not exclude from the exemption under § 802.1(d)(4) the sale of all of the equipment from that division. However, if that division derived revenues from providing data processing services to third parties, then the unit would be considered to be an operating unit. Further, equipment used to derive third party revenues would not have been used *solely* to provide management and administrative support services for the business operations of the acquired person.

Proposed § 802.1(d)(4), like proposed § 802.1(d)(3), permitted the use of the exemption if the acquired person had a contract, agreement in principle or letter of intent to obtain the administrative and management support services provided by the goods being sold. New § 802.1(d)(4) requires that the acquired person execute in good faith a contract for the services to be outsourced. The contract gives rise to a binding obligation on the acquired person to outsource the services provided by the goods being sold.

Comment 14 suggested that a sale of goods pursuant to the decision to downsize or discontinue a management and administrative support service should also be included within the exemption. The recommendation was not adopted because the Commission does not have sufficient information and knowledge at this time to conclude that the elimination—as opposed to the outsourcing—of management and administrative support services in every business setting is unlikely to raise competitive concerns.

Comment 7 suggested that examples to § 802.1(d)(4) that distinguish between goods that perform a management and administrative support service and goods that are an integral part of operations that affect competition be changed to reflect a more objective standard, such as goods that generate third party revenues. This suggestion was not adopted because of the variation among industries of the factors that distinguish goods that perform management and administrative support services from goods that are integral to the business operations of the company. In a vertically integrated company, for example, equipment it used for componentry manufacture would not be considered goods that perform a management and administrative support service, even though the company derived no third party revenues from the sale of the components, but used the components in the manufacture of its final products. Example 12 illustrates a similar application of § 802.1(d)(4). Therefore, if a company has an internal operation that also derives third party revenues, that operation will not be considered a management and administrative support service; however, the fact that a company's internal operation does not derive third party revenues does not automatically make the operation a management and administrative support service.

Comments 10 and 27 recommended an exemption for transfers of used airplanes that do not qualify for the exemption in § 802.1(d)(3). Comment 27 presented statistics showing that there may be little correlation between used equipment sold by air carriers and new equipment that they purchase. The commenter stated that this absence of correlation would make the exemption in § 802.1(d)(3) unavailable for most potentially reportable sales of used aircraft. Comment 10 suggested an exemption for acquisitions of less than 15 percent of an air carrier's total productive capacity, while Comment 27 stated that exempt acquisitions of used aircraft and spare parts should be limited to less than 15 percent of an air carrier's total productive assets.

Although a specific exemption for acquisitions of used aircraft has not been added to the final rules, the recommendations and concerns raised by Comments 10 and 27 are still under consideration. In providing certain limited exemptions for transfers of used durable goods in this rulemaking, the Commission's primary concern is that the acquisitions that qualify for these exemptions are ordinary course of business transactions and do not constitute either significant downsizing or substantial transfers of productive capacity without replacement. The recommendations made by Comments 10 and 27 suggest a less restrictive exemption for sales of aircraft that would not require replacement and would permit limited downsizing. The Commission has no experience in implementing HSR exemptions based on the sale of a limited percentage of the acquired person's capacity or assets or a basis to conclude that such acquisitions do not pose competitive

concerns. Moreover, an exemption based on the sale of capacity would present difficulties in determining the appropriate measure to use in applying the exemption. However, Comments 10 and 27 have raised issues that may be unique to the airline industry, and the Commission believes that further consideration is needed.

Other additions to § 802.1(d) that were suggested by commenters include a recommendation in Comment 3 to exempt purchases of goods for the purpose of demolition, disassembly and sale of usable parts (*e.g.*, an oil tanker being sold for scrap and parts) and goods that can no longer lawfully be used for the purpose for which they were used by the acquired person (*e.g.*, oil tankers no longer allowed to call on U.S. ports because of hull restrictions that are sold for other lawful uses). Specific provisions to address these types of transactions were not adopted. Most purchases of used equipment for scrap and parts should be exempt as an acquisition of current supplies under §§ 802.1(c)(1) and 802.1(d)(1). With regard to the second exemption suggested, the Commission does not have evidence to show that such transactions occur with sufficient frequency to warrant the addition of the exemption, and it is not confident that a clearly-bounded exemption could be created to cover a category of transactions not likely to violate the antitrust laws.

II. Section 802.2: Certain Acquisitions of Real Property Assets

New § 802.2 exempts eight categories of real property acquisitions from the reporting requirements of the act. These include acquisitions of new facilities, certain used facilities by the original lessee in a lease financing arrangement, unproductive real property, office and residential property, hotels and motels, recreational property, agricultural property, and rental retail space and warehouses.

This new rule creates new exemptions for several categories of real property acquisitions that the enforcement agencies, after extensive review, have concluded ''are not likely to violate the antitrust laws.'' Section 7A(d)(2)(B) of the act. For the most part, the types of real property assets that are included within this exemption are abundant, and their holdings are widely dispersed. Transfers of these categories of real property are generally small relative to the total amount of holdings, and entry into regional and local markets for these types of real property assets is usually easy.

Previously, the Premerger Notification Office had interpreted section 7A(c)(1) of the act as exempting certain acquisitions of new facilities, undeveloped realty, office buildings and residential property as transfers of realty in the ordinary course of business. Although new § 802.2 is not based on section 7A(c)(1) of the act, certain acquisitions of realty exempted by this new exemption may also qualify for exemption as transfers of realty in the ordinary course of business. The primary difference between new § 802.2, that exempts the acquisition of certain types of realty, and amended § 802.1, that exempts the acquisition of goods and realty in the ordinary course of business, is that the former—because it is not based on the ''ordinary course'' concept—does not limit the exemption to acquisitions that are not acquisitions of operating units. In fact, several categories of realty exempted by new § 802.2, *e.g.*, hotels, motels and agricultural land, may qualify as operating units, but they are exempt under this provision.

The exemptions for new facilities, certain used facilities, unproductive real property, office and residential property, hotels and motels, certain recreational land, agricultural property, rental retail space and warehouses state that any non-exempt assets that are being transferred as part of an acquisition of the exempt assets are separately subject to the requirements of the act and the rules. This approach to non-exempt portions of acquisitions is also used in § 802.3. The Commission recognizes that this approach may result, as Comment 9 has pointed out, in ''a more fragmented analysis * * * generating value allocation issues.'' However, the Commission believes that this inconvenience is offset by an approach that results in an expanded exemption for realty acquisitions.

A. *New Facilities.* New § 802.2(a) exempts the acquisition of new facilities, which may include real estate, equipment and assets incidental to the ownership of the new facility. The term ''new facility'' is new to the rules, and the Commission has concluded that acquisitions of new facilities are not likely to violate the antitrust laws. Although the provision is intended primarily to exempt ''turnkey'' facilities, *i.e.*, new facilities capable of commencing operations immediately with minimal additional capital investment, it does not require that the facility be ready for immediate occupancy. The facility may need additional construction or outfitting at the time it is purchased and still qualify for the exemption. However, if the facility requires a substantial amount of additional construction or outfitting, it may not be classified as a new facility but may qualify as unproductive real property as defined in new § 802.2(c).

The new exemption is unchanged from proposed § 802.2(a), and it applies only to new structures that have not produced income. It also applies only if the acquired person has held the facility at all times solely for sale. The language of the exemption allows the holder of the new facility to be either a builder of the facility (''constructed by the acquired person for sale'') or other persons, such as a creditor, who take possession of a new facility with the intention of selling it (''held at all times by the acquired person solely for resale''). These limitations prevent the sale by an acquired person of capacity constructed for the acquired person's use, as Example 1 to § 802.2 illustrates.

New § 802.2(a) requires separate valuation of non-exempt assets being purchased in an acquisition of a new facility. If the value of the non-exempt assets exceeds $15 million, and no other exemptions apply, then the purchase of these non-exempt assets is separately subject to the notification requirements.

B. *Used facilities.* New § 802.2(b) exempts the acquisition of a used facility by a lessee that has had sole and continuous possession and use of the facility since it was first built, from a lessor that holds title to the facility for financing purposes in the ordinary course of its business. This provision was not contained in the proposed rules. It is being adopted in response to Comment 6.

New facilities are often acquired through lease financing arrangements. In a lease financing arrangement a creditor, in a bona fide credit transaction entered into in the ordinary course of its business, acquires a new facility and immediately leases it to a lessee that will have sole and continuous use and possession of the facility, usually under a long-term lease. The lessee generally has the option to purchase the facility from the lessor at or before the end of the lease term. Currently, there is no exemption for this acquisition even though the acquisition of the new facility may have been exempt under § 802.2(a) if the lessee had acquired the facility directly when it first began operation and had financed the purchase through an installment sales arrangement.

New § 802.2(b) will effectively treat the subsequent acquisition by the original lessee of a used facility that the lessee originally took possession of as a new facility through a lease financing arrangement the same as the direct

purchase of a new facility through a more traditional credit arrangement. This new exemption also will effectively treat this category of acquisitions the same as an acquisition of a leased facility by a lessee subject to a sale/leaseback arrangement. In a sale/leaseback arrangement the owner of a facility sells the facility to a creditor that acquires it in a bona fide credit transaction in the ordinary course of its business. The creditor immediately leases the facility back to the owner, now lessee, under a long-term lease. The arrangement is often used as method of raising capital. Since the original owner/lessee held beneficial ownership of the facility prior to the sale/leaseback arrangement and the lessor typically receives only title and a security interest in the facility, the Premerger Notification Office generally has informally interpreted the rules to require no notification for the subsequent repurchase because the original owner/lessee did not relinquish beneficial ownership when it entered into the sale/leaseback arrangement.

C. *Unproductive real property.* New § 802.2(c) exempts acquisitions of unproductive real property. Subject to the limitations of § 802.2(c)(2), unproductive real property is real property, including raw land, structures or other improvements, associated production and exploration assets as defined in § 802.3(c), natural resources and assets incidental to the ownership of the real property, that has not produced revenues of more than $5 million during the 36 months preceding the transaction. Structures and improvements are additions to the real property that add value and include, for example, buildings and parking lots. Production machinery and equipment are not included in the definition of structures and improvements, and their acquisition must be analyzed separately to determine whether notification is required. Natural resources refers to any assets growing or appearing naturally on the land, such as timber and mineral deposits.

New § 802.2(c)(2) excludes from the exemption acquisitions of manufacturing and non-manufacturing facilities that have not yet begun operations as well as facilities that have been in operation at any time during the twelve months preceding the acquisition. The exclusion for manufacturing and non-manufacturing facilities that have not begun operations is narrow and applies to facilities that are held by a person who neither constructed the facility for sale nor held the facility at all times for resale. The acquisition of a new structure from a person who built the facility to sell or held it solely for resale is exempt under new § 802.2(a), the exemption for new facilities. The exclusion in § 802.2(c)(2)(i) is also intended to apply to ''turnkey'' facilities, *i.e.*, new facilities capable of commencing operations immediately with minimal additional capital investment; whether acquisition of a ''turnkey'' facility is exempt is determined under § 802.2(a). A new facility that is partially complete, is not ready to commence operation in the immediate future and requires substantial additional capital investment is not yet a manufacturing or non-manufacturing facility within the meaning of § 802.2(c)(2)(i). Such a facility may qualify as unproductive real property.

New § 802.2(c)(2)(iii) also excludes real property that is either adjacent to or used in conjunction with real property that does not qualify as unproductive real property and is part of the acquisition. This exclusion is intended to make § 802.2(c) unavailable for the acquisition of vacant land adjoining productive property, such as a factory, a poultry processing facility or a meat packing plant, which is also part of the acquisition. This exclusion was not in the proposed rule. Without this exclusion, it might have been argued that the acquisition of the vacant land should be exempt under § 802.2 if income has been derived only from the factory and not from activities taking place on the vacant land. However, this exemption is not permitted under § 802.2(c) because the vacant land, due to its adjacency to the factory, is considered to be part of the productive property that is being acquired. If the vacant land were not adjoining the factory but were used in connection with the factory operations, the § 802.2(c) exemption would still be unavailable for the acquisition of the vacant land because it was used in conjunction with the factory. Example 7 illustrates this exclusion from § 802.2(c).

The primary purpose of new § 802.2(c) is to eliminate filing requirements for acquisitions of formerly productive property, which is no longer used to generate revenues, and undeveloped, non-income producing property. New § 802.2(c) will exempt most wilderness and rural land that is not used commercially, and urban land that is vacant or contains facilities that have ceased operations more than twelve months prior to the acquisition and that have generated a minimal amount of income during the most recent three-year period.

''Associated production and exploration assets as defined in § 802.3(c),'' was added to the definition of unproductive real property in response to Comments 15 and 24. This addition will include within the exemption for acquisitions of unproductive real property any machinery or equipment associated with a formerly productive coal mine or oil and gas reserve that has not been in operation for twelve months prior to the acquisition and has not generated revenues of more than $5 million during the thirty-six months prior to the acquisition.

New § 802.2(c)(2) incorporates a suggestion made by Comment 14 that the language of the proposed rule's exclusion for manufacturing and non-manufacturing facilities ''that began operation within the twelve (12) months preceding the acquisition'' be modified. Comment 14 pointed out that the proposed exemption excludes from the definition of unproductive real property facilities that began operation during the twelve-month period prior to the acquisition but includes operations that were commenced more than twelve months before the acquisition. One of the concepts underlying this exemption is to exclude from the reporting requirements formerly productive facilities, *i.e.*, facilities whose operations have ceased and are no longer being used to generate revenues. The exemption was not intended to apply to manufacturing and non-manufacturing operations begun more than twelve months prior to the acquisition and continuing to operate during the twelve-month period prior to the acquisition. The language suggested by Comment 14 excludes from the exemption manufacturing and non-manufacturing facilities that were in operation at any time during the twelve months preceding the acquisition. Because this language is more consistent with the ''formerly used/abandoned facilities concept'' underlying this exemption, the Commission has decided to adopt this suggestion in the final rule.

Comment 14 also suggested that language be added to § 802.2(c) that, for purposes of this provision, no revenues be deemed generated by any real property used solely to provide management and administrative support services (formerly ''auxiliary support functions'') for the business operations of the acquired person. The commenter expressed concern that while the acquisition of goods used by the seller to provide these support services would be exempt under § 802.1(d)(4), the acquisition of a facility used only to house equipment that provides these support services may not be exempt from the notification requirements. The

Commission agrees that if the acquisition of the equipment providing the management and administrative support service is exempt under § 802.1(d)(4), then the acquisition of a facility used solely to house the equipment should be exempt. However, in most cases this type of facility can be classified as office property, the acquisition of which is exempt under § 802.2(d).

D. *Office and residential property.* New § 802.2(d) exempts acquisitions of office and residential property. ''Office or residential property'' is defined as real property that is used primarily for office or residential purposes.

The rule specifies that in determining whether real property is used primarily for office or residential purposes, the total space being measured should consist of real property, the acquisition of which is not exempted by other provisions of the act or rules. Therefore, in making this determination, any portion of the building consisting of, for example, rental retail space, the acquisition of which is exempt under § 802.2(f), should be excluded.

The language of new § 802.2(d)(2) differs somewhat from the language in the proposed rule in order to make clearer the procedure for determining whether real property is used primarily for office and residential purposes. Although new § 802.2(d) does not specify the meaning of ''primarily,'' it is contemplated that at least 75 percent of the space in the qualifying property is used for office or residential purposes. Example 8 applies this threshold to exempt the acquisition of a multi-use building.

If the acquisition includes assets other than office or residential property, the acquisition of those assets is separately subject to the notification requirements. For example, if the acquiring person is also purchasing a factory for $20 million, the acquisition of the factory is separately subject to the reporting requirements.

New § 802.2(d)(3) also specifies that if the purchaser is acquiring a business that is conducted on the office or residential property, the acquisition of the business, including the space in which the business is conducted, is separately subject to the notification requirements of the act. For example, if a company owns an office building in which it operates a department store and the purchaser of that building is acquiring not only the space that the store occupies but also the retail operations of the department store, the acquisition of the department store business as well as the space that the store occupies is subject to the notification requirements of the act. If the value of the business and the space in which the business is conducted exceeds $15 million, the acquisition of the department store business is reportable.

The inclusion of ''assets incidental to the ownership of office and residential property'' is derived from the language of existing § 802.1. Although incidental assets may have value apart from the real property, they are often necessary for the continued and uninterrupted use of the property. Therefore, incidental assets are included in the description in new § 802.2(d) of office and residential property and are exempt assets.

Comment 14 suggested that language be added to new § 802.2(d) to exempt structures that house equipment that provide management and administrative support services to the seller and owner of the structure. As mentioned above, the Commission believes that the common meaning of office space includes space used solely to provide management and administrative support services to the acquired person. For example, if an acquired person owns a building that primarily houses the computer equipment used to provide its administrative data processing needs, and the acquired person, in good faith, executed a contract for substantially the same services, the sale of the equipment would be exempt pursuant to § 802.1(d)(4). The sale of the building also would qualify for exemption as an acquisition of office property, since the building is not housing a ''business'' that is being transferred but office equipment that is being sold.

E. *Hotels and motels.* New § 802.2(e) exempts from the reporting requirements acquisitions of hotels and motels, and improvements to those facilities, such as golf, swimming, tennis, restaurant, health club or parking facilities (but excluding ski facilities), and assets incidental to the ownership of those facilities. The exemption, however, excludes the acquisition of a hotel or motel that includes a gambling casino.

The exemption is based on the Commission's review of past HSR notifications and observation that acquisitions of hotels and motels, except for those excluded from the exemption, are unlikely to violate the antitrust laws. Several commenters affirmed the Commission's understanding that these types of assets are plentiful and widely held, and often they are owned by investor groups that hire management firms or national chains to operate the facilities. Even in local markets entry appears to be relatively easy.

The proposed exemption for the acquisition of hotels and motels excluded hotels ''acquired as part of the acquisition of a ski resort.'' This exclusion raised questions concerning the treatment of a ski resort containing a hotel versus a hotel that has ski facilities along with other recreational improvements. The wording of the new exemption excludes ski facilities from improvements included with a hotel or motel which may be acquired without observing the reporting requirements. As a result, in an acquisition of a hotel with ski facilities, the acquisition of the hotel is exempt, but the ski facilities must be valued separately to determine if their acquisition is subject to the notification requirements.

Ski facilities are not included within the exemption for acquisitions of hotels and motels because the Commission does not have a basis for concluding that the acquisition of a ski facility is not likely to violate the antitrust laws. In addition, ski facilities do not appear to be characterized by the same ease of entry as hotels generally. Gambling casinos are also excluded from the exemption because they involve services other than lodging, and their acquisition may affect competition in certain local markets. Also, certain areas may have licensing requirements for gambling casinos that serve as an impediment to entry.

Comments 9 and 14 suggested that the exemption for hotels and motels be expanded to included the acquisition of related improvements, such as golf courses, swimming and tennis facilities and restaurants. The Commission agrees that the inclusion of these improvements, as well as health clubs and parking facilities, does not raise antitrust concerns and, thus, has included such related improvements as qualifying for the exemption. The Commission also has added language exempting the acquisition of assets incidental to the ownership of the hotel or motel being acquired to make clear that all related permits and tangible personal property used directly in the operation of the facility are included within the exemption.

In the Statement of Basis and Purpose accompanying the proposed rule, the Commission made clear that ''this exemption would include the acquisition by a national hotel chain of hotel assets of another hotel chain.'' The Statement of Basis and Purpose went on to say that ''if the acquisition includes assets other than hotels and motels, *e.g.*, the selling firm's trademark or its hotel management business, these assets must be separately valued to determine whether their acquisition is subject to

the notification requirements.'' Comments 19, 26 and 29 suggested that the exemption for hotels and motels be expanded to included the acquisition of trademarks and hotel management businesses. These comments assert that hotel and motel assets are plentiful and that entry into the hotel/motel business is relatively easy, justifying a broader exemption to cover all hotel and motel asset acquisitions. The Commission has learned that acquisitions of hotel and motel assets typically include the transfer of the hotel management contracts in effect at the time of the acquisition as well as licenses to use the trademarks associated with the hotel or motel being acquired. Thus new § 802.2(e) explicitly includes these contracts and licenses among the list of assets incidental to the operation of the hotel or motel. However, the exemption does not include the acquisition of hotel management businesses or the purchase of a hotel trademark. Such acquisitions, even if made in connection with the purchase of a hotel or motel, are not considered to be transfers of incidental assets associated with a hotel or motel and are therefore separately subject to the requirements of the act.

F. *Recreational Land.* New § 802.2(f) exempts the acquisition of recreational land, which is defined as real property used primarily as golf, swimming, or tennis club facilities and assets incidental to the ownership of such property. If an acquisition includes any property or assets other than recreational land, the acquisition of these other assets is separately subject to the notification requirements.

This exemption was not originally included in proposed § 802.2 and is being added to the final rule in response to Comment 14 that suggested an exemption for certain types of recreational land. The Commission has received HSR filings for a very small number of acquisitions of recreational land, primarily golf courses. Based on this experience, the Commission believes that the acquisition of certain types of recreational land is not likely to violate the antitrust laws. This exemption is limited to the types of recreational realty the acquisition of which is exempt as improvements when acquired as part of a hotel or motel under § 802.2(e). Recreational land under § 802.2(f) does not include, for example, ski facilities, multi-purpose arenas, stadia, racetracks and amusement parks.

G. *Agricultural property.* New § 802.2(g) exempts acquisitions of agricultural property, assets incidental to the ownership of the property and associated assets integral to the agricultural business activities conducted on the property. Agricultural property that is covered by this exemption is real property that primarily derives revenues under Major Groups 01 and 02 of the 1987 Standard Industrial Classification (SIC) Manual. Associated assets integral to the agricultural business activities conducted on the property to be acquired include structures (e.g., barns used to house livestock), fertilizer, animal feed and inventory (*e.g.,* livestock, poultry, crops, fruits, vegetables, milk, and eggs). In an acquisition that includes assets that are covered by this exemption, the transfer of any other assets is separately subject to the notification requirements.

Associated agricultural assets do not include processing equipment or facilities. If a meat packing or poultry processing market is concentrated in a given local area, the transfer of in- house processing capacity may have a significant effect on the market. For this reason, the Commission believes that such transfers should be reviewed prior to consummation so the agencies can determine whether the proposed acquisition will affect competition adversely.

The proposed rule exempting acquisitions of agricultural property included within the definition of associated agricultural assets ''equipment dedicated to the income-generating activities conducted on the real property.'' New § 802.2(g) omits this equipment from the definition of associated agricultural assets because in certain cases the equipment may be part of a processing facility, the acquisition of which is not exempt under § 802.2(g).

The final rule also changes the proposed rule by including a parenthetical reference to SIC Major Groups 01 and 02 in the definition of agricultural property. This inclusion is intended to make clear that acquisitions of agricultural land on which other activities involving farm products are conducted, *e.g.,* activities included within SIC Major Groups 20 (*e.g.,* meat packing plants, poultry slaughtering and processing, milk processing, and corn wet milling), 42 (farm product storage and warehousing) and 51 (buying and marketing of farm products) are not included within the exemption.

New § 802.2(g)(2), which has been added to the proposed rule, provides that ''agricultural property does not include any real property and assets either adjacent to or used in conjunction with facilities that are not associated agricultural assets and that are included in the acquisition.'' This provision excludes from the exemption, for example, acquisitions of any real property and assets that are either adjacent to or used in conjunction with poultry or livestock slaughtering, processing or packing facilities that are also being acquired. Thus, if a meat packing plant is surrounded by vacant land that serves as a buffer zone for environmental purposes or as an area for grazing cattle in connection with the plant operations, and an acquiring person intends to purchase the plant and the surrounding property, the acquisition of the vacant land is not exempt either as an acquisition of agricultural land or an acquisition of unproductive real property [see discussion of § 802.2(c)(2)]. The vacant land is considered to be part of the business of the plant, and its acquisition, along with that of the plant, is subject to the reporting requirements.

H. *Rental retail space; warehouses.* New § 802.2(h) exempts acquisitions of two other categories of real property, rental retail space and warehouses. Rental retail space includes structures that house and are rented to retail establishments and include real property assets such as shopping centers, strip malls, and stand alone buildings. These types of assets are abundant and widely held by insurance companies, banks, other institutional investors and individual investors as investments and rental property. The Commission believes that acquisitions of these types of real property assets are unlikely to violate the antitrust laws.

However, the new rule provides that if the retail rental space or warehouses are to be acquired in an acquisition of a business conducted on the real property, the acquisition of the retail rental space or warehouses is not exempt. Thus, if an acquiring person is also acquiring a business that is conducted on the real property, the acquisition of that business, including the portion of the real property on which the business is conducted, is separately subject to the notification requirement of the act. For example, if a department store chain proposed to acquire from another department store chain several shopping centers and the department store business conducted by the seller in several stores located in these shopping centers, the acquisition of the seller's department store business and the portion of the shopping centers in which the stores are located would be subject to the notification requirements. The acquisition of the portion of the shopping centers that housed other retail establishments would be exempt under this rule. Similarly, as illustrated in Example 12, the exemption for the acquisition of warehouses is lost if

warehouses are being acquired in connection with the acquisition of a wholesale distribution business.

The new rule also provides that if an acquisition of rental retail space or a warehouse includes other assets, those other assets are separately subject to the reporting requirements of the act. New § 802.2(h) differs from the proposed rule only in the addition to the exemption of assets incidental to the ownership of retail rental space or warehouses. Without this addition, it would be necessary to value separately any incidental assets associated with the ownership of the property, contrary to the treatment of real property assets included in other provisions of § 802.2.

III. Section 802.3: Acquisitions of Carbon-Based Mineral Reserves

New § 802.3 adds exemptions for certain acquisitions of carbon-based mineral reserves. Specifically, § 802.3(a) exempts the acquisition of reserves of oil, natural gas, shale and tar sands or the rights to such assets if the value of the reserves, the rights and associated exploration and production assets to be held as a result of the acquisition do not exceed $500 million. Similarly, § 802.3(b) exempts the acquisition of reserves of coal or rights to coal reserves if the value of the reserves, the rights and associated exploration and production assets to be held as a result of the acquisition do not exceed $200 million. Associated exploration and production assets are defined in new § 802.3(c) to mean, with certain specified exceptions, equipment, machinery, fixtures, and other assets that are integral and exclusive to current or future exploration or production activities associated with the carbon-based mineral reserves that are being acquired.

The Commission's studies of the coal and oil and gas industries have shown that the values of the reserves in these industries are substantial compared with asset holdings in other industries. The holdings of reserves in these industries are widely dispersed, and individual acquisitions have had minimal effect on concentration. However, the Commission believes that an unlimited exemption for reserves of coal and oil and gas is inappropriate, because acquisitions of carbon-based mineral reserves above the newly established thresholds may warrant an examination of their potential effects on competition.

New § 802.3 differs from proposed § 802.3 in that new § 802.3(a) expands the exemption for oil, natural gas, shale and tar sands by increasing the value of the reserves that will be held as a result of the acquisition that qualify for the exemption from $200 million to $500 million. This increase is based on statistical information provided by Comments 5 and 9 indicating that the ownership of oil and gas reserves in the United States and worldwide is relatively unconcentrated. Moreover, the acquisition of $500 million of crude oil reserves in the United States would amount to about 1/10 of 1 percent of domestic oil reserves. Such an acquisition, if made by the leading commercial owner of domestic reserves, would result in an increase in the HHI of about 2 points in an unconcentrated market. The Commission has concluded that acquisitions of oil and gas reserves valued at $500 million or less are unlikely to violate the antitrust laws. However, the $200 million threshold for transactions involving coal reserves was retained from proposed § 802.3. The Commission does not have sufficient information to support a higher threshold for coal reserves acquisitions. Also, because acquisitions of coal reserves may tend to affect local or regional markets, a higher threshold may exempt transactions that should be reviewed for their impact on such markets.

Sections 802.3(a) and 802.3(b) primarily are designed to exempt acquisitions of producing reserves, but also may exempt some acquisitions of non-producing reserves that may also be exempt as unproductive real property under § 802.2(c). Because the exemption is not based on the ''ordinary course'' concept, the exemptions also apply if the reserves and associated assets being transferred constitute all or substantially all of the assets of an operating unit. If the reserves being acquired are not yet producing, the acquisition also is likely to be exempt under § 802.2(c) as an acquisition of unproductive real property. For formerly producing reserves that have not been in production during the twelve months preceding the acquisition and have not generated revenues in excess of $5 million during the 36 months preceding the acquisition, their acquisition would qualify as unproductive real property. If the reserves qualify as unproductive property, their acquisition is exempt, regardless of the value of the reserves. Currently producing reserves are governed by the valuation requirements of § 802.3. Example 1, which involves an acquisition consisting of non-producing gas reserves, producing oil reserves and assets associated with the producing reserves, illustrates the application of § 802.2(c) and § 802.3 to the separate components of the acquisition.

The $500 million threshold in § 802.3(a) and the $200 million threshold in § 802.3(b) apply to reserves, rights to the reserves and associated exploration or production assets. The acquisition of these associated assets is not separately reportable because these assets generally have no competitive significance separate from the reserves. In many instances, producing reserves contain dedicated equipment that may have a market value exceeding $15 million but have no practical value absent the reserves. In addition, the wide availability of used equipment in the oil and gas and coal industries makes it unlikely that a servicer of oil fields or coal mines could purchase reserves to restrict supply of available equipment in a given region. Thus, the Commission believes that the inclusion of associated exploration and production assets is necessary to facilitate meaningful application of the exemption.

Associated exploration or production assets are defined in § 802.3(c) to include equipment, machinery, fixtures and other assets that are integral to the exploration or production activities of the reserves. Such assets do not include any intellectual property rights that may be transferred with the reserves. In the oil and gas industry, examples of associated exploration or production assets include proprietary or licensed geological and geophysical data, wells, pumps, compressors, easements, permits and rights of way.

As in the oil and gas industry, exploration or production assets associated with coal reserves may include proprietary or licensed geological and geophysical data, easements, permits and rights of way. In surface mining in the western U.S., associated production assets may consist of various load out facilities, including storage barns and silos, dryer barns and railroad spurs, and heavy equipment such as draglines and crushers. Such assets would also include the long-term coal contracts and federal leases related to the reserves.

New § 802.3 also changes the categories of assets that are excluded from the definition of associated production or exploration assets as it relates to oil and natural gas reserves. Proposed § 802.3 excluded from associated production or exploration assets all flow and gathering pipelines, distribution pipelines, interests in pipelines, processing facilities and refineries, because acquisitions of these assets in certain local markets have, from time to time, raised competitive

concerns prompting investigations by the enforcement agencies. However, Comments 3, 5, 9 and 24 recommended including in the definition of associated exploration or production assets pipeline systems and field treating facilities that serve a particular producing property and have no competitive significance apart from the oil and natural gas reserves being acquired. The Commission has concluded that acquisitions of these systems and facilities in connection with the reserves to which they are dedicated are unlikely to violate the antitrust laws because they do not have the potential for competing in the provision of services to third parties. Therefore, the definition of associated exploration or production assets now clearly delineates dedicated facilities from facilities serving third parties by excluding ''any pipeline and pipeline system or processing facility which transports or processes oil and gas after it passes through the meters of a producing field; and any pipeline or pipeline system that receives gas directly from gas wells for transportation to a natural gas processing facility or other destination.''

Comments 17, 18 and 30 proposed an exemption for acquisitions of timberland, noting that the raw material supply and manufacturing resources in the forestry industry are abundant, and ownership of timberland is fragmented. However, because there has been enforcement interest in a number of transactions involving timberland in the western United States, the Commission declined to include an exemption for acquisitions of timberland to insure that the enforcement agencies continue to receive notification of those acquisitions of timberland that may present competitive concerns.

Comment 9 noted that the enforcement agencies, as they obtain additional experience and information about other natural resources, will perhaps identify ways of expanding § 802.3 to include other types of producing reserves without posing undue risk to competition. For non-producing reserves of other minerals and renewable natural resources, § 802.2(c) will exempt acquisitions of these reserves if they qualify as unproductive real property. Regarding producing reserves, the Commission has not included these in § 802.3 at this time because it does not have an adequate factual basis for determining that acquisitions of other types of mineral reserves and renewable natural resources should be exempt from the requirements of the act or subject to a reporting level higher than the statutory $15 million threshold. However, the Commission will continue to collect information about other minerals and renewable natural resources and determine at a later date if expansion of § 802.3 to include acquisition of reserves of these resources is warranted.

IV. Section 802.4: Acquisitions of Voting Securities of Issuers Holding Certain Assets the Direct Acquisition of Which Is Exempt

New § 802.4 exempts the acquisition of voting securities of issuers that hold certain assets the direct acquisition of which is exempt under the act or the rules. New § 802.4(a) exempts the acquisition of voting securities of an issuer whose assets, together with those of all entities controlled by the issuer, consist of assets whose direct purchase is exempt from the notification requirements pursuant to section 7A(c)(2) of the act or §§ 802.2, 802.3 and 802.5 of the rules. New § 802.4(b) defines ''issuer'' as used in § 802.4 to mean a single issuer, or two or more issuers controlled by the same person. The exemptions provided by new § 802.4 are available so long as the acquired issuer or issuers do not in the aggregate hold exempt assets that exceed the threshold limitations of the cited rules and non-exempt assets with a fair market value of more than $15 million. New § 802.4(c) states that fair market value as determined in accordance with § 801.10 (c)(3) of the rules is the standard to apply in determining the value of assets held by an issuer whose voting securities are being acquired pursuant to § 802.4. New § 802.4 applies to acquisitions resulting in the holding of a minority interest as well as a controlling interest in the acquired issuer's outstanding voting securities.

Section 802.4 derives in part from original § 802.1(a) which exempted ''an acquisition of the voting securities of an entity whose assets consist solely of real property'' and related assets, if a direct acquisition of that real property and those related assets would be exempt. The rationale for original § 802.1(a) and new § 802.4 is that the applicability of an exemption should not depend on the form of the acquisition. The antitrust analysis would seem to be the same whether assets or voting securities are acquired. *See* Statement of Basis and Purpose to § 802.1(a), 43 FR 33488 (July 31, 1978).

Proposed § 802.4(a) extended this approach by exempting acquisitions of voting securities of issuers whose assets consist solely of assets exempt under proposed § 802.2: new facilities, unproductive real property, office and residential property, hotels and motels, agricultural property, rental retail space and warehouses. Proposed § 802.4(b) contained a comparable exemption for issuers whose assets consist solely of carbon-based mineral reserves exempt under proposed § 802.3.

New § 802.4 differs in five respects from the proposal. First, new paragraph (a) no longer requires that the issuer whose voting securities are being acquired hold *solely* exempt assets. New § 802.4(a) provides that the issuer also may hold up to $15 million of non-exempt assets in addition to the exempt assets. Second, proposed paragraph (b) has been merged into new paragraph (a). In the proposed exemption, the aggregation principles of § 801.15(b) applied only to § 802.4(b), while § 801.15(a) applied to § 802.4(a). Because of the new provision that an issuer whose voting securities are being acquired pursuant to § 802.4 also may hold up to $15 million of non-exempt assets, § 801.15(b) applies to all transactions under § 802.4. New § 802.4(a) now describes all classes of acquisitions that are exempt pursuant to § 802.4.

Third, new § 802.4(a) has been expanded and now provides an exemption for voting securities acquisitions of issuers that hold assets the direct acquisition of which are exempt pursuant to section 7A(c)(2) of the act and § 802.5 of the rules. Fourth, new § 802.4(b) has been added to the rule to make clear that the term ''issuer'' as used in § 802.4(a) means a single issuer or two or more issuers controlled by the same person. Lastly, new § 802.4(c) has been added to make clear that the value of assets held by an issuer whose voting securities are being acquired pursuant to § 802.4 is the fair market value determined in accordance with § 801.10(c)(3) of the rules.

The first change responds to Comments 2, 5 and 9, which noted that the requirement in proposed § 802.4 that the acquired issuer could hold solely assets exempt under §§ 802.2 and 802.3 was very limiting and caused the proposed exemption to fall short of the goal of treating voting securities acquisitions the same as asset purchases. Proposed §§ 802.2 and 802.3 provided an exemption for asset acquisitions involving the purchase of certain types of realty and carbon-based mineral reserves and required that the acquisition of any non-exempt assets be separately analyzed to determine whether notification was required prior to their purchase. Thus, under proposed §§ 802.2 and 802.3, a person could acquire certain exempt assets and non-exempt assets valued at $15 million or

less and would not be required to file. However, in contrast, the requirement in proposed § 802.4 that the acquired issuer hold solely exempt assets precluded the exemption if the issuer held any assets not exempt under §§ 802.2 and 802.3.

The Commission agrees that this limitation seemed to undercut the rationale underlying § 802.4 to reduce the extent to which the form of the transaction affects the requirement to file notification. For this reason, as noted previously, the Commission has modified proposed § 802.4 to exempt acquisitions of issuers that hold assets exempt under section 7A(c)(2) of the act and new §§ 802.2, 802.3, and 802.5, and non-exempt assets with a fair market value of $15 million or less.

Comment 2 also suggested that proposed § 802.4 be amended to exempt acquisitions of voting securities of issuers that hold ''incidental assets,'' *i.e.*, assets incidental to the ownership of the exempt assets, in addition to the assets that are exempt pursuant to proposed §§ 802.2 and 802.3. The commenter pointed out that since incidental assets were not included in every provision of the proposed rules as exempt assets, the ownership of incidental assets by an acquired issuer would limit the application of § 802.4. As noted previously, the Commission has modified the language of proposed § 802.4 to include within the exemption acquisitions of voting securities of issuers holding assets exempt under the cited rules and non-exempt assets with a fair market value of $15 million or less. The Commission also has included within the various subsections of §§ 802.2 and 802.3 language that will include within the exemptions, assets incidental to the ownership of the exempt assets. The Commission believes that since the ownership of incidental assets has little effect on competition, the value of incidental assets should not be included in the determination of whether the acquired issuer holds non-exempt assets with a fair market value exceeding $15 million. The Commission believes that these modifications adequately address the concerns raised by this comment.

The second change was made because the provisions of § 801.15(b) that address aggregation of previous acquisitions now govern all voting securities acquisitions of issuers holding assets exempt under the sections included within new § 802.4(a). Proposed § 802.4(a) contained exemptions that did not require aggregation because the exemptions were not based on the holding of assets valued at less than a set threshold amount. For instance, the exemption for certain types of realty provided in § 802.2 is applicable regardless of the value of the exempt assets to be acquired. However, since new § 802.4(a) has eliminated the restriction that an issuer whose voting securities are to be acquired hold solely exempt assets and now permits the acquired issuer to hold non-exempt assets valued at $15 million or less, the principles of § 801.15(b) apply, and aggregation is required to determine whether this limitation will be exceeded.

The third change from the proposed rules reflects a suggestion by Comment 9 that section 7A(c)(2) of the act be included within § 802.4. Section 7A(c)(2) exempts acquisitions of ''bonds, mortgages, deeds of trust, and other obligations which are not voting securities.'' The Commission agrees that the acquisition of these types of assets are of little antitrust concern, whether acquired in the form of an asset or voting securities acquisition, and has added section 7A(c)(2) of the act to new § 802.4(a).

Similarly, an exemption for acquisitions of voting securities of issuers holding assets the direct acquisition of which would be exempt under § 802.5 is now included in § 802.4(a) as a result of revisions to § 802.5 (see discussion, below). Because proposed § 802.5 included a limitation on the type of purchaser that qualified for the exemption, comparable voting securities acquisitions could not be included within § 802.4 and thus were exempted within proposed § 802.5. New § 802.5 has been revised to remove the limitation, and the exemption for the equivalent voting securities acquisition has been moved to § 802.4. Therefore, acquisitions of the voting securities of issuers holding investment rental property plus non-exempt assets valued at $15 million or less will be exempt pursuant to § 802.4(a).

The addition of § 802.4(b) stems from the rationale underlying this exemption that voting securities acquisitions and asset purchases be treated similarly for purposes of § 802.4. The first step toward achieving similar treatment was to modify proposed §§ 802.4(a) and (b) to include within the exemption the acquisition of issuers that hold exempt assets and non-exempt assets valued at $15 million or less. The Commission believes that, in addition to this modification, purchasers should be required to aggregate acquisitions of voting securities of different issuers controlled by the same acquired person. Otherwise, the form of the transaction will affect the notification requirement. For this reason, new § 802.4(b) defines issuer, for purposes of § 802.4, to mean a single issuer or multiple issuers controlled by the same acquired person. Thus, when the voting securities of more than one issuer controlled by the same person are being acquired, aggregation of the non-exempt assets held by these issuers and aggregation of the carbon-based mineral reserves for which there are threshold limitations is required. For example, if ''A'' proposed to acquire the voting securities of three subsidiaries of ''B'' and each subsidiary held $200 million of oil and gas reserves, the acquisition would not be exempt under § 802.4(a) because the acquired issuers hold in the aggregate $600 million of oil and gas reserves. If the acquisition were structured as an asset acquisition with ''A'' purchasing the oil and gas reserves held by ''B's'' three subsidiaries, the acquisition would not qualify for exemption under new § 802.3(a) since the value of the reserves to be acquired exceeds $500 million.

Similarly, if ''A'' proposed to acquire the voting securities of three of ''B's'' subsidiaries and each held, respectively, (1) two hotels and $10 million of non-exempt assets, (2) two hotels and $7 million of non-exempt assets and (3) three hotels and $3 million of non-exempt assets, ''A'' would be required to aggregate the value of the non-exempt assets to determine whether the acquired issuers hold in the aggregate non-exempt assets exceeding $15 million in value. Since the value of the non-exempt assets exceeds $15 million, ''A's'' proposed acquisition would not be exempt under § 802.4(a). If the acquisition were structured as an asset acquisition with ''A'' purchasing the hotels and the non-exempt assets directly, ''A's'' acquisition of the hotels would be exempt under § 802.2(e) but ''A'' would be required to file notification for the acquisition of the non-exempt assets. The Commission recognizes that in this situation the holdings of non-exempt assets exceeding $15 million in the voting securities acquisition negated the availability of the exemption for the entire acquisition, whereas in the asset acquisition filing would be required only for the acquisition of the non-exempt assets. However, since voting securities acquisitions are by their nature different than asset acquisitions because voting securities represent an interest in the undivided totality of the underlying assets, this difference in outcome is unavoidable but reasonable.

New § 802.4(c) has been added to make clear that the value of the exempt and non-exempt assets held by the issuer is fair market value determined in

accordance with § 801.10(c)(3). The Commission recognizes that this requirement may be difficult to meet when the acquisition is hostile or the acquiring person proposes to acquire a minority interest through the acquisition of voting securities from third party holders, *e.g.*, open market purchases. However, § 801.10(c)(3) requires that the acquiring person make a good faith determination of the fair market value of the assets of the issuer whose voting securities are to be acquired. The acquired person cannot rely on the absence of data to make a good faith determination that the fair market value of the assets held by the acquired issuer(s) does not exceed threshold limitations.

The modifications that have been made to proposed § 802.3, providing different thresholds for oil and gas reserves and coal reserves, and proposed § 802.4, expanding the exemption to include issuers holding non-exempt assets with a fair market value of $15 million or less, complicate the application of the rules requiring aggregation of acquisitions of voting securities of different issuers controlled by the same acquired person. The previous discussion addressed the issue of aggregation when the voting securities of different issuers are acquired in the same transaction. The following discussion addresses some of the intricacies of aggregation involving subsequent acquisitions from the same acquired person of voting securities of the same issuer (and of different issuers) holding assets exempt under §§ 802.2, 802.3 and 802.5 and section 7A(c)(2) of the act.

To address the issue of aggregation involving subsequent acquisitions from the same issuer of voting securities governed by the exemptions provided by § 802.4, § 801.15(b) has been revised to include §§ 802.3 and 802.4. Section 801.15(b) provides that voting securities, the acquisition of which was exempt under certain identified exemptions, are not held as a result of an acquisition unless in a subsequent acquisition the limitations contained in those specified exemptions are exceeded. For example, ''A'' acquires for $40 million, in an exempt transaction, 20 percent of the voting stock of B, which holds petroleum reserves valued at $300 million and subsequently plans to acquire an additional five percent of the B's voting securities for $10 million. ''A'' would be required to determine whether its subsequent acquisition of B's stock qualifies for the exemption under § 802.4(a). If B's holdings of oil and gas reserves have increased and the value of its reserves exceeds $500 million, ''A's'' subsequent acquisition of B's stock would not be exempt under § 802.4(a). Under § 801.15(b), ''A'' is considered to hold 20 percent of the voting stock of B, and ''A's'' subsequent acquisition is not exempt under § 802.4(a).

Another situation in which aggregation is required under § 801.15(b) involves an acquisition of a minority interest in the voting securities of an issuer exempt under § 802.4(a) followed by a subsequent acquisition of either a minority or a controlling interest in the voting securities of another issuer included within the same acquired person. For example, assume that ''A'' acquired 30 percent of the voting securities of C, an issuer controlled by ''B,'' for $40 million and that the acquisition was exempt under § 802.4(a) because C held oil and gas assets valued at $300 million and non-exempt assets valued at $7 million. Six months later, ''A'' proposes to acquire from ''B'' all (or a minority) of the voting securities of D and E, issuers controlled by ''B,'' for $20 million each. D has oil and gas reserves valued at $150 million and non-exempt assets valued at $2 million, and E has oil and gas reserves valued at $150 million and non-exempt assets valued at $2 million. Under § 801.15(b), ''A'' is required to aggregate its current proposed acquisitions of D and E with its previous exempt acquisition of C's voting securities to determine whether the limitations set forth in § 802.4(a) will be exceeded as a result of the subsequent acquisition. In this situation, since the value of the oil and gas reserves held by the C, D, and E exceed $500 million, the acquisition of the voting securities of D and E is not exempt under § 802.4(a).

Aggregation is not required in a subsequent acquisition of voting stock of an issuer included within the same acquired person if the acquiring person acquired control of that issuer in an earlier transaction, *i.e.*, holds 50 percent or more of the issuer's outstanding voting securities. In such case, the issuer is now included within the acquiring person, and the aggregation requirements of § 801.13(a) do not apply since control has passed to the acquiring person. (In a situation in which the acquiring person acquires exactly 50 percent of an issuer's voting stock and the acquired person has retained 50 percent, the Premerger Notification Office has long treated the issuer as within the acquiring person alone in applying the aggregation requirements of §§ 801.13 and 801.14 for subsequent voting stock and asset purchases from the same acquired person.) Therefore, if an acquiring person has acquired 50 percent or more of the voting stock of an issuer and proposes to acquire additional voting stock from the same issuer or another issuer controlled by the same acquired person, the acquiring person is not required to aggregate the assets of the issuer in the first acquisition with assets of the issuer in the second acquisition to determine if any limitations have been exceeded.

Section 802.4 contains three examples that illustrate the application of the rule, including an example involving simultaneous acquisitions. Examples illustrating the aggregation principles of § 802.4 in sequential transactions are included in the examples to § 801.15. Section 802.4 represents the Commission's first major effort to accord the same treatment to asset acquisitions and comparable voting securities acquisitions. The aggregation principles, though necessary, complicate the application of the exemption. If the complexity of the aggregation principles makes applying the § 802.4 exemption overly burdensome for parties, the Commission will review the provision to determine if any changes to the exemption are necessary.

Proposed Section 802.5: Acquisitions of Investment Rental Property Assets

Section 802.5 exempts acquisitions of investment rental property assets. It is intended to exempt certain acquisitions of real property that are not exempt under new § 802.2. The exemption applies only to acquisitions of real property assets that will be held by the acquiring person solely for rental or investment purposes and that will be rented only to entities not included within the purchaser (except for the sole purpose of maintaining, managing or supervising the operation of the investment rental property assets). Thus, the intent of the purchaser at the time of the acquisition must be considered to determine whether the exemption is available. Although the application of new § 802.5, unlike proposed § 802.5, is no longer limited to certain types of acquiring persons such as institutional investors, the Commission believes that this provision will exempt most real property acquisitions typically made by institutional investors, real estate investment trusts (''REITs''), or real estate development and management companies that are not exempted by new § 802.2.

New § 802.5 is designed to supplement new § 802.2 by recognizing that there may be additional categories of real property assets, such as industrial parks and multi-purpose sports and entertainment facilities, that,

when acquired as investment rental property, are not likely to violate the antitrust laws. Acquisitions of these types of real property are often made solely for rental investment purposes. In such instances, investors in such property play no active role in the business conducted on these properties and seek only to profit from their investment in the real estate. Moreover, in order to reduce risk of loss in the value of the real estate they hold, purchasers of numerous properties generally do not concentrate their investments in a single geographic market. Given the size and unconcentrated nature of the real estate market, such acquisitions are not likely to pose a competitive concern. The limitations in new § 802.5 on the intent of the acquiring person and the use of the qualifying real property are designed to insure that the exemption will not be available for any acquisition intended to achieve business objectives that are not related to the rental or investment objectives.

Although the investment rental property exemption may apply to real property, such as office or residential property, hotels/motels and rental retail space, that is also exempt under § 802.2, there will be no need to apply new § 802.5 to the acquisition of these categories of real property assets. The important distinction between § 802.2 and § 802.5 is that § 802.2 exempts acquisitions of specific classes of real property assets and does not incorporate the intent-based test of § 802.5, while § 802.5 exempts any type of real property assets that meet the rule's requirements for investment rental property. In addition, the exemptions for acquisition of real property under § 802.2 apply even if the acquiring person occupies the property for any purpose while § 802.5 permits the acquiring person to use the acquired investment rental property assets only to manage or operate the real property assets being acquired.

Proposed § 802.5 limited the availability of the exemption for acquisitions of investment rental property to institutional investors as defined by § 802.64 and persons whose sole business is the acquisition or management of investment rental property assets. Comment 2 recommended that the limitation on qualified purchasers be eliminated because the definition of investment rental property assets in proposed § 802.5(b) would be sufficient to prevent purchasers from conducting business on the property being acquired. Comment 31 suggested that the exemption should be available to persons other than investors whose sole business consists of acquiring or managing investment rental property assets. REITs, the commenter pointed out, are permitted to own certain assets such as temporary stock and bond investments that are not investment rental property and thus, under the proposed rules, may not qualify as entities whose sole business is acquiring and managing investment rental property assets.

The Commission has determined that the dual restrictions in proposed § 802.5 which made the exemption available only to (1) certain types of investors for (2) acquisitions of investment rental property were too limiting. The Commission believes that eliminating the first restriction will not compromise the efficacy of the exemption. Thus, new § 802.5 is available to all types of purchasers so long as the acquisition qualifies as investment rental property assets.

New § 802.5 includes a provision, found in other sections of Part 802 and omitted from proposed § 802.5, stating that in an acquisition that includes investment rental property, the transfer of any other property shall be separately subject to the requirements of the act. Thus an investor can purchase property, the acquisition of which is exempt under § 802.5, and non-exempt assets valued at $15 million or less and still qualify for the exemption.

In addition, the provision included in proposed § 802.5 exempting acquisitions of voting securities of an entity holding assets that consist solely of investment rental property assets has been modified and moved to new § 802.4. Thus, the exemption for acquisitions of voting securities of issuers holding § 802.5 assets will be governed by § 802.4. This change results in greater comparability between the direct acquisition of § 802.5 assets and the acquisition of voting securities of issuers holding these assets.

Proposed § 802.5 included within the definition of investment rental property assets any space occupied by the acquiring person for the sole purpose of maintaining, managing or supervising the operation of real property *and* real property rented only to entities not included within the acquired person. The proposal incorrectly implied that an investor could not lease a portion of the acquired rental property to a subsidiary or other affiliated entity which would, in turn, manage the property on behalf of the investor. The language in new § 802.5 has been changed and explicitly permits the investor to establish this arrangement with a subsidiary solely to maintain, manage or supervise the purchased property.

For some acquisitions, in order to determine prior to the acquisition whether the buyer will use the investment rental property in accordance with the requirements of § 802.5, it may be necessary to examine the acquisition intent of the acquiring person, particularly if that investor is controlled by a person that also controls entities engaged in other businesses. The acquisition intent can be inferred from the context of the transaction and from actions by the acquiring person before the acquisition. Circumstances or conduct such as the following may be scrutinized separately or in combination to determine whether the acquiring person has an intent that is fully consistent with holding property solely as investment rental property assets: (1) the acquiring person undertook, prior to the acquisition, a study of the cost of converting the property for use by one of its businesses; (2) the property is to be converted for use by the acquiring person; (3) prior to the acquisition, the property is being leased to or used by entities included within the acquiring person; (4) a portion of the acquired property is being leased at the time of the acquisition to a competitor of the acquiring person; and (5) the purchase price reflects the value of a business operated on the property rather than the investment rental value of the property.

Because § 802.5 covers a broad range of non-specific assets and places no limits on who may acquire the assets, the Commission has declined to adopt the suggestion in Comment 7 to eliminate the requirement that the property to be acquired will be rented only to entities not included within the acquiring person. The Commission also declined to adopt the suggestions in Comments 7 and 9 to eliminate the restrictions on the acquiring person's use of any space on the property for the sole purpose of maintaining, managing and supervising the operation of the property. Limits on the use of the property provide additional safeguards to insure that the property is being acquired for investment or rental purposes, since other safeguards such as limits on the type of investment rental property that can be acquired and the type of investor that qualifies for exemption are absent from new § 802.5.

Currently, HSR notifications are not required for acquisitions of realty made by REITs under the ordinary course of business exemption. REITs acquire real estate in the ordinary course of their business, and the fiduciary nature of their investment activities and the restrictions imposed upon them by the Internal Revenue Code safeguard against improper use of property they acquire.

New § 802.5 is not intended to narrow the exemption from the reporting requirements that is currently available to REITs.

Comment 9 noted that the language of proposed § 802.5 excluded the acquisition of a REIT by a non-REIT, because of the restriction on the type of investor that qualified for the exemption. Acquisitions of REITs by non-REITs are currently subject to the notification requirements, because the fiduciary restraints that govern acquisitions by REITs do not generally apply to non-REITs. However, under new § 802.5, the acquisition by a non-REIT of all of the assets of a REIT may be exempt from the reporting requirements if the transaction meets the requirements of the exemption. The acquisition of all of the assets of a REIT by another REIT is currently an exempt transaction, even though the acquired REIT may hold certain non-real estate assets, and new § 802.5 does not supersede this exemption.

VI. Aggregation Rules

Section 801.15 states that, notwithstanding § 801.13, certain assets and voting securities acquired in exempt transactions are not considered to be ''held as a result of an acquisition.'' These rules and concepts govern whether certain acquisitions must be aggregated to determine if a proposed acquisition requires notification. As the Statement of Basis and Purpose makes clear (43 FR 33479), § 801.15 is applicable to simultaneous acquisitions in which both exempt and non-exempt assets or voting securities are being acquired from the same acquired person and to acquisitions of non-exempt assets or voting securities after the person has previously acquired exempt assets or voting securities from the same acquired person.

Section 801.15(a) provides that assets and voting securities exempt at the time of acquisition under certain provisions of the act and rules are not held as a result of the acquisition. Acquisitions exempted by section 7A(c)(1) of the act are among the classes listed. As a result, in determining whether an assets acquisition meets the more than $15 million size-of-transaction criterion of section 7A(a)(3), the value of assets acquired in the ordinary course of business is not counted. Because § 802.1 declares that certain acquisitions are and that others are not considered to be transfers in the ordinary course of business under section 7A(c)(1), it is not necessary to list § 802.1 separately in § 801.15(a). However, to eliminate possible confusion, § 802.1 is listed in § 801.15(a), along with section 7A(c)(1), to make clear that assets exempted pursuant to § 802.1(b), (c) and (d) are not deemed to be held as the result of an acquisition for aggregation purposes. Therefore, an acquisition of current supplies valued at $8 million is not aggregated with subsequent acquisitions from the same person to determine if a proposed acquisition will exceed the $15 million size-of-transaction notification threshold, since the current supplies are exempt pursuant to section 7A(c)(1) and § 802.1(c).

New § 802.2, which provides an exemption for the acquisition of certain types of real property assets (new facilities, used facilities, unproductive real property, office and residential property, hotels and motels, recreational land, agricultural property, rental retail space and warehouses) is also listed in § 801.15(a) since the exemption sets no dollar limit on the amount of exempt assets that may be acquired without prior notification. Since new § 802.2 is listed in § 801.15(a), assets exempt under this provision are never held as a result of an acquisition. Section 802.5, which exempts acquisitions of investment rental property also appears in § 801.15(a). However, it is important to note that new §§ 802.2 and 802.5 provide that the acquisition of any other assets not exempted by new §§ 802.2 and 802.5 are subject to the requirements of the act and the rules as if they were being acquired in a separate acquisition. Consequently, in an acquisition that includes these exempt assets, the acquisition of other non-exempt assets are subject to the aggregation requirements of § 801.13(b).

Sections 802.3 (exempting certain acquisitions of carbon-based mineral reserves) and 802.4(exempting acquisitions of voting securities of issuers holding exempt assets under section 7A (c)(2) of the act, §§ 802.2, 802.3 and 802.5, plus non-exempt assets valued at $15 million or less), appear in § 801.15(b). This provision requires parties to aggregate the value of otherwise exempt assets that are transferred in separate acquisitions. Section 801.15(b) provides that the aggregation rules of § 801.13 are to be applied if, as a result of a proposed subsequent transaction, the assets from that transaction and an earlier transaction will exceed a quantitative limitation on the exemption of assets of that kind. Thus, the $500 million limitation for oil and gas reserves and the $200 million limitation for coal reserves in § 802.3, that were not reached in an earlier acquisition, may be exceeded by a subsequent acquisition of reserves.

Example 4 to § 801.15 amends the current Example 4, in which the acquiring person is purchasing two mines. The existing example does not indicate whether the mines contain carbon-based minerals. Based on the value of the mines stated in the example, § 802.3 would exempt their acquisition if they are carbon-based mineral reserves. To avoid possible confusion, the acquired assets have been changed to manufacturing plants.

In response to a suggestion in Comment 9, language has been added to Example 5 regarding valuation of assets in sequential acquisitions to determine if the limitation in § 802.3 has been exceeded. In such acquisitions, the buyer is not required to determine the current fair market value of the assets of the first acquisition, but he may use the value of those assets at the time of their prior acquisition pursuant to § 801.10(b). However, in applying § 802.4, if in the first acquisition the buyer had purchased a minority share of the voting securities of an issuer that held the exempt oil reserves assets and proposed to buy additional voting securities from the same issuer, the buyer is required to revalue the total holdings of the issuer at the time of the second acquisition to determine if the issuer's holdings of oil and gas rights and reserves exceed the limitation in § 802.3.

In proposed § 801.15, only § 802.4(b) appeared in § 801.15(b) because only that provision of § 802.4 exempted acquisitions of voting securities of issuers holding assets that, if acquired directly, were exempt subject to certain dollar limitations. Paragraphs (a) and (b) of proposed § 802.4 have now been consolidated into new § 802.4(a) since the exemption has been expanded to exempt issuers holding exempt assets and non-exempt valued at $15 million or less. New § 802.4 now appears in amended § 801.15(b) to reflect the provision contained in § 802.4(a) limiting the value of the non-exempt assets that the issuer whose voting securities are being acquired can hold. Also, three new examples have been added to § 801.15 to illustrate the aggregation principles of § 802.4 (see discussion of new § 802.4, above).

List of Subjects in 16 CFR Parts 801 and 802

Antitrust.

Amended Rules

The Commission amends Title 16, Chapter 1, Subpart H, of the Code of Federal Regulations as follows:

PART 801—COVERAGE RULES

1. The authority citation for Part 801 continues to read as follows:

Authority: Sec. 7A(d), Clayton Act, 15 U.S.C. 18a(d), as added by sec. 201, Hart-Scott-Rodino Antitrust Improvements Act of 1976, Pub. L. 94–435, 90 Stat. 1390.

2. Section 801.15(a)(2) and (b) are revised to read as follows:

§ 801.15 Aggregation of voting securities and assets the acquisition of which was exempt.

* * * * *

(a) * * *

(2) Sections 802.1, 802.2, 802.5, 802.6(b)(1), 802.8, 802.31, 802.35, 802.50(a)(1), 802.51(a), 802.52, 802.53, 802.63, and 802.70;

(b) Assets or voting securities the acquisition of which was exempt at the time of acquisition (or would have been exempt, had the act and these rules been in effect), or the present acquisition of which is exempt, under section 7A(c)(9) and §§ 802.3, 802.4, 802.50(a)(2), 802.50(b), 802.51(b) and 802.64 unless the limitations contained in section 7A(c)(9) or those sections do not apply or as a result of the acquisition would be exceeded, in which case the assets or voting securities so acquired will be held; and

* * * * *

3. Section 801.15, Example 4 is revised, and Examples 5, 6, 7 and 8 are added to read as follows:

§ 801.15 Aggregation of voting securities and assets the acquisition of which was exempt.

* * * * *

Examples: * * *

4. Assume that acquiring person ''B,'' a United States person, acquired from corporation ''X'' two manufacturing plants located abroad, and assume that the acquisition price was $40 million. In the most recent year, sales into the United States attributable to the plants were $15 million, and thus the acquisition was exempt under § 802.50(a)(2). Within 180 days of that acquisition, ''B'' seeks to acquire a third plant from ''X,'' to which United States sales of $12 million were attributable in the most recent year. Since under § 801.13(b)(2), as a result of the acquisition, ''B'' would hold all three plants of ''X,'' and the $25 million limitation in § 802.50(a)(2) would be exceeded, under paragraph (b) of this rule, ''B'' would hold the previously acquired assets for purposes of the second acquisition. Therefore, as a result of the second acquisition, ''B'' would hold assets of X exceeding $15 million in value, would not qualify for the exemption in § 802.50(a)(2), and must observe the requirements of the act and file notification for the acquisition of all three plants before acquiring the third plant.

5. ''A'' acquires producing oil reserves valued at $400 million from ''B.'' Two months later, ''A'' agrees to acquire oil and gas rights valued at $75 million from ''B.'' Paragraph (b) of this section and § 801.13(b)(2) require aggregating the previously exempt acquisition of oil reserves with the second acquisition. If the two acquisitions, when aggregated, exceed the $500 million limitation on the exemption for oil and gas reserves in § 802.3(a), ''A'' and ''B'' will be required to file notification for the latter acquisition, including within the filings the earlier acquisition. Since, in this example, the total value of the assets in the two acquisitions, when aggregated, is less than $500 million, both acquisitions are exempt from the notification requirements. In determining whether the value of the assets in the two acquisitions exceed $500 million, ''A'' need not determine the current fair market value of the oil reserves acquired in the first transaction, since these assets are now within the person of ''A.'' Instead ''A'' may use the value of the oil reserves at the time of their prior acquisition in accordance with § 801.10(b).

6. ''X'' acquired 55 percent of the voting securities of M, an entity controlled by ''Z,'' six months ago and now proposes to acquire 50 percent of the voting stock of N, another entity controlled by ''Z.'' M's assets consist of $150 million worth of producing coal reserves plus $7 million worth of non-exempt assets and N's assets consist of a producing coal mine worth $100 million together with non-exempt assets with a fair market value of $6 million. ''X's'' acquisition of the voting securities of M was exempt under § 802.4(a) because M held exempt assets pursuant to § 802.3(b) and less than $15 million of non-exempt assets. Because ''X'' acquired control of M in the earlier transaction, M is now within the person of ''X,'' and the assets of M need not be aggregated with those of N to determine if the subsequent acquisition of N will exceed the limitation for coal reserves or for non-exempt assets. Since the assets of N alone do not exceed these limitations, ''X's'' acquisition of N also is not reportable.

7. In Example 6, above, assume that ''X'' acquired 30 percent of the voting securities of M and proposes to acquire 40 percent of the voting securities of N, another entity controlled by ''Z.'' Assume also that M's assets at the time of ''X's'' acquisition of M's voting securities consisted of $90 million worth of producing coal reserves and non-exempt assets with a fair market value of $9 million, and that N's assets currently consist of $60 million worth of producing coal reserves and non-exempt assets with a fair market value of $8 million. Since ''X'' acquired a minority interest in M and intends to acquire a minority interest in N, and since M and N are controlled by ''Z,'' the assets of M and N must be aggregated, pursuant to § 801.15(b) and § 801.13, to determine whether the acquisition of N's voting securities is exempt. ''X'' is required to determine the current fair market value of M's assets. If the fair market value of M's coal reserves is unchanged, the aggregated exempt assets do not exceed the limitation for coal reserves. However, if the present fair market value of N's non-exempt assets also is unchanged, the present fair market value of the non-exempt assets of M and N when aggregated is greater than $15 million. Thus the acquisition of the voting securities of N is not exempt. If ''X'' proposed to acquire 50 percent or more of the voting securities of both M and N in the same acquisition, the assets of M and N must be aggregated to determine if the acquisition of the voting securities of both issuers is exempt. Since the fair market value of the aggregated non-exempt assets exceeds $15 million, the acquisition would not be exempt.

8. ''A'' acquired 49 percent of the voting securities of M and 45 percent of the voting securities of N. Both M and N are controlled by ''B.'' At the time of the acquisition M held rights to producing coal reserves worth $90 million and N held a producing coal mine worth $90 million. This acquisition was exempt since the aggregated holdings fell below the $200 million limitation for coal in § 802.3(b). A year later, ''A'' proposes to acquire an additional 10 percent of the voting securities of both M and N. In the intervening year, M has acquired coal reserves so that its holdings are now valued at $140 million, and the value of N's assets remained unchanged. ''A's'' second acquisition would not be exempt. ''A'' is required to determine the value of the exempt assets and any non-exempt assets held by any issuer whose voting securities it intends to acquire before each proposed acquisition (unless ''A'' already owns 50 percent or more of the voting securities of the issuer) to determine if the value of those holdings of the issuer falls below the limitation of the applicable exemption. Here, an assessment shows that the holdings of M and N now exceed the $200 million limitation for coal reserves in § 802.3.

PART 802—EXEMPTION RULES

1. The authority citation for Part 802 continues to read as follows:

Authority: Sec. 7A(d), Clayton Act, 15 U.S.C. 18a(d), as added by sec. 201, Hart-Scott-Rodino Antitrust Improvements Act of 1976, Pub. L. 94–435, 90 Stat. 1390.

2. Section 802.1 is revised to read as follows:

§ 802.1 Acquisitions of goods and realty in the ordinary course of business.

Pursuant to section 7A(c)(1), acquisitions of goods and realty transferred in the ordinary course of business are exempt from the notification requirements of the act. This section identifies certain acquisitions of goods that are exempt as transfers in the ordinary course of business. This section also identifies certain acquisitions of goods and realty that are not in the ordinary course of business and, therefore, do not qualify for the exemption.

(a) *Operating unit.* An acquisition of all or substantially all the assets of an operating unit is not an acquisition in the ordinary course of business. ''Operating unit'' means assets that are operated by the acquired person as a

business undertaking in a particular location or for particular products or services, even though those assets may not be organized as a separate legal entity.

(b) *New goods.* An acquisition of new goods is in the ordinary course of business, except when the goods are acquired as part of an acquisition described in paragraph (a) of this section.

(c) *Current supplies.* An acquisition of current supplies is in the ordinary course of business, except when acquired as part of an acquisition described in paragraph (a) of this section. The term ''current supplies'' includes the following kinds of new or used assets:

(1) Goods acquired and held solely for the purpose of resale or leasing to an entity not within the acquiring person (*e.g.*, inventory),

(2) Goods acquired for consumption in the acquiring person's business (*e.g.*, office supplies, maintenance supplies or electricity), and

(3) Goods acquired to be incorporated in the final product (*e.g.*, raw materials and components).

(d) *Used durable goods.* A good is ''durable'' if it is designed to be used repeatedly and has a useful life greater than one year. An acquisition of used durable goods is an acquisition in the ordinary course of business if the goods are not acquired as part of an acquisition described in paragraph (a) of this section and any of the following criteria are met:

(1) The goods are acquired and held solely for the purpose of resale or leasing to an entity not within the acquiring person; or

(2) The goods are acquired from an acquired person who acquired and has held the goods solely for resale or leasing to an entity not within the acquired person; or

(3) The acquired person has replaced, by acquisition or lease, all or substantially all of the productive capacity of the goods being sold within six months of that sale, or the acquired person has in good faith executed a contract to replace within six months after the sale, by acquisition or lease, all or substantially all of the productive capacity of the goods being sold; or

(4) The goods have been used by the acquired person solely to provide management and administrative support services for its business operations, and the acquired person has in good faith executed a contract to obtain substantially similar services as were provided by the goods being sold. Management and administrative support services include services such as accounting, legal, purchasing, payroll, billing and repair and maintenance of the acquired person's own equipment. Manufacturing, research and development, testing and distribution (*i.e.*, warehousing and transportation) are not considered management and administrative support services.

Examples: 1. Greengrocer Inc. intends to sell to ''A'' all of the assets of one of the 12 grocery stores that it owns and operates throughout the metropolitan area of City X. Each of Greengrocer's stores constitutes an operating unit, i.e., a business undertaking in a particular location. Thus ''A's'' acquisition is not exempt as an acquisition in the ordinary course of business. However, the acquisition will not be subject to the notification requirements if the acquisition price or fair market value of the store's assets does not exceed $15 million.

2. ''A,'' a manufacturer of airplane engines, agrees to pay $20 million to ''B,'' a manufacturer of airplane parts, for certain new engine components to be used in the manufacture of airplane engines. The acquisition is exempt under § 802.1(b) as new goods as well as under § 802.1(c)(3) as current supplies.

3. ''A,'' a power generation company, proposes to purchase from ''B,'' a coal company, $25 million of coal under a long-term contract for use in its facilities to supply electric power to a regional public utility and steam to several industrial sites. This transaction is exempt under § 802.1(c)(2) as an acquisition of current supplies. However, if ''A'' proposed to purchase coal reserves rather than enter into a contract to acquire output of a coal mine, the acquisition would not be exempt as an acquisition of goods in the ordinary course of business. The acquisition may still be exempt pursuant to § 802.3(b) as an acquisition of reserves of coal if the requirements of that section are met.

4. ''A,'' a national producer of canned fruit, preserves, jams and jellies, agrees to purchase from ''B'' for $25 million a total of 10,000 acres of orchards and vineyards in several locations throughout the U.S. ''A'' plans to harvest the fruit from the acreage for use in its canning operations. The acquisition is not exempt under § 802.1 because orchards and vineyards are real property, not ''goods.'' If, on the other hand, ''A'' had contracted to acquire from ''B'' the fruit and grapes harvested from the orchards and vineyards, the acquisition would qualify for the exemption as an acquisition of current supplies under § 802.1(c)(3). Although the transfer of orchards and vineyards is not exempt under § 802.1, the acquisition would be exempt under § 802.2(g) as an acquisition of agricultural property.

5. ''A,'' a railcar leasing company, will purchase $20 million of new railcars from a railcar manufacturer in order to expand its existing fleet of cars available for lease. The transaction is exempt under § 802.1(b) as an acquisition of new goods and § 802.1(c), as an acquisition of current supplies. If ''A'' subsequently sells the railcars to ''C'', a commercial railroad company, that acquisition would be exempt under § 802.1(d)(2), provided that ''A'' acquired and held the railcars solely for resale or leasing to an entity not within itself.

6. ''A,'' a major oil company, proposes to sell two of its used oil tankers for $15.5 million to ''B,'' a dealer who purchases oil tankers from the major U.S. oil companies. ''B's'' acquisition of the used oil tankers is exempt under § 802.1(d)(1) provided that ''B'' is actually acquiring beneficial ownership of the used tankers and is not acting as an agent of the seller or purchaser.

7. ''A,'' a cruise ship operator, plans to sell for $18 million one of its cruise ships to ''B,'' another cruise ship operator. ''A'' has, in good faith, executed a contract to acquire a new cruise ship with substantially the same capacity from a ship builder. The contract specifies that ''A'' will receive the new cruise ship within one month after the scheduled date of the sale of its used cruise ship to ''B.'' Since ''B''is acquiring a used durable good that ''A'' has contracted to replace within six months of the sale, the acquisition is exempt under § 802.1(d)(3).

8. ''A,'' a luxury cruise ship operator, proposes to sell to ''B,'' a credit company engaged in the ordinary course of its business in lease financing transactions, its fleet of six passenger ships under a 10-year sale/leaseback arrangement. That acquisition is exempt pursuant to § 802.1(d)(1), used durable goods acquired for leasing purposes. The acquisition is also exempt under § 802.63(a) as a bona fide credit transaction entered into in the ordinary course of ''B's'' business. ''B'' now proposes to sell the ships, subject to the current lease financing arrangement, to ''C,'' another lease financing company. This transaction is exempt under § 802.1(d)(1) and § 802.1(d)(2).

9. Three months ago ''A,'' a manufacturing company, acquired several new machines that will replace equipment on one of its production lines. ''A's'' capacity to produce the same products increased modestly when the integration of the new equipment was completed. ''B,'' a manufacturing company that produces products similar to those produced by ''A,'' has entered into a contract to acquire for $18 million the machinery that ''A'' replaced. Delivery of the equipment by ''A'' to ''B'' is scheduled to occur within thirty days. Since ''A'' purchased new machinery to replace the productive capacity of the used equipment, which it sold within six months of the purchase of the new equipment, the acquisition by ''B'' is exempt under § 802.1(d)(3).

10. ''A'' will sell to ''B'' for $16 million all of the equipment ''A'' uses exclusively to perform its billing requirements. ''B'' will use the equipment to provide ''A's'' billing needs pursuant to a contract which ''A'' and ''B'' executed 30 days ago in conjunction with the equipment purchase agreement. Although the assets ''B'' will acquire make up essentially all of the assets of one of ''A's'' management and administrative support services divisions, the acquisition qualifies for the exemption under § 802.1(d)(4) because a company's internal management and administrative support services, however organized, are not an operating unit as defined by § 802.1(a). Management and administrative support services are not a ''business undertaking'' as that term is used

in § 802.1(a). Rather, they provide support and benefit to the company's operating units and support the company's business operations. However, if the assets being sold also derived revenues from providing billing services for third parties, then the transfer of these assets would not be exempt under § 802.1(d)(4), since the equipment is not being used solely to provide management and administrative support services to ''A''.

11. ''A,'' a manufacturer of pharmaceutical products, and ''B'' have entered into a contract under which ''B'' will provide all of ''A's'' research and development needs. Pursuant to the contract, ''B'' will also purchase all of the equipment that ''A'' formerly used to perform its own research and development activities. The sale of the equipment is not an exempt transaction under § 802.1(d)(3) because ''A'' is not replacing the productive capacity of the equipment being sold. The sale is also not exempt under § 802.1(d)(4), because functions such as research and development and testing are not management and administrative support services of a company but are integral to the design, development or production of the company's products.

12. ''A,'' an automobile manufacturer, is discontinuing its manufacture of metal seat frames for its cars. ''A'' enters into a contract with ''B,'' a manufacturer of various fabricated metal products, to sell its seat frame production lines and to purchase from ''B'' all of its metal seat frame needs for the next five years. This transfer of productive capacity by ''A'' is not exempt pursuant to § 802.1(d)(3), since ''A'' is not replacing the productive capacity of the equipment being sold. The acquisition is also not exempt under § 802.1(d)(4). ''A's'' sale of production lines is not the transfer of goods that provide management and administrative services to support the business operations of''A''; this manufacturing equipment is an integral part of ''A's'' production operations.

3. Part 802 is amended by adding Sections 802.2, 802.3, 802.4 and 802.5 to read as follows:

§ 802.2 Certain acquisitions of real property assets.

(a) *New facilities.* An acquisition of a new facility shall be exempt from the requirements of the act. A new facility is a structure that has not produced income and was either constructed by the acquired person for sale or held at all times by the acquired person solely for resale. The new facility may include realty, equipment or other assets incidental to the ownership of the new facility. In an acquisition that includes a new facility, the transfer of any other assets shall be subject to the requirements of the act and these rules as if they were being acquired in a separate acquisition.

(b) *Used facilities.* An acquisition of a used facility shall be exempt from the requirements of the act if the facility is acquired from a lessor that has held title to the facility for financing purposes in the ordinary course of the lessor's business by a lessee that has had sole and continuous possession and use of the facility since it was first built as a new facility. The used facility may include realty, equipment or other assets associated with the operation of the facility. In an acquisition that includes a used facility that meets the requirements of this paragraph, the transfer of any other assets shall be subject to the requirements of the act and these rules as if they were acquired in a separate transaction.

(c) *Unproductive real property.* An acquisition of unproductive real property shall be exempt from the requirements of the act. In an acquisition that includes unproductive real property, the transfer of any assets that are not unproductive real property shall be subject to the requirements of the act and these rules as if they were being acquired in a separate acquisition.

(1) Subject to the limitations of (c)(2), unproductive real property is any real property, including raw land, structures or other improvements (but excluding equipment), associated production and exploration assets as defined in § 802.3(c), natural resources and assets incidental to the ownership of the real property, that has not generated total revenues in excess of $5 million during the thirty-six (36) months preceding the acquisition.

(2) Unproductive real property does not include the following:

(i) Manufacturing or non-manufacturing facilities that have not yet begun operation;

(ii) Manufacturing or non-manufacturing facilities that were in operation at any time during the twelve (12) months preceding the acquisition; and

(iii) Real property that is either adjacent to or used in conjunction with real property that is not unproductive real property and is included in the acquisition.

(d) *Office and residential property.*

(1) An acquisition of office or residential property shall be exempt from the requirements of the act. In an acquisition that includes office or residential property, the transfer of any assets that are not office or residential property shall be subject to the requirements of the act and these rules as if such assets were being transferred in a separate acquisition.

(2) Office and residential property is real property that is used primarily for office or residential purposes. In determining whether real property is used primarily for office or residential purposes, all real property, the acquisition of which is exempt under another provision of the act and these rules, shall be excluded from the determination. Office and residential property includes:

(i) Office buildings,

(ii) Residences,

(iii) Common areas on the property, including parking and recreational facilities, and

(iv) Assets incidental to the ownership of such property, including cash, prepaid taxes or insurance, rental receivables and the like.

(3) If the acquisition includes the purchase of a business conducted on the office and residential property, the transfer of that business, including the space in which the business is conducted, shall be subject to the requirements of the act and these rules as if such business were being transferred in a separate acquisition.

(e) *Hotels and motels.*

(1) An acquisition of a hotel or motel, its improvements such as golf, swimming, tennis, restaurant, health club or parking facilities (but excluding ski facilities), and assets incidental to the ownership and operation of the hotel or motel (*e.g.*, prepaid taxes or insurance, management contracts and licenses to use trademarks associated with the hotel or motel being acquired) shall be exempt from the requirements of the act. In an acquisition that includes a hotel or motel, the transfer of any assets that are not a hotel or motel, its improvements such as golf, swimming, tennis, restaurant, health club or parking facilities (but excluding ski facilities) and assets incidental to the ownership of the hotel or motel, shall be subject to the requirements of the act and these rules as if they were being acquired in a separate acquisition.

(2) Notwithstanding paragraph (1) of the section, an acquisition of a hotel or motel that includes a gambling casino shall be subject to the requirements of the act and these rules.

(f) *Recreational land.* An acquisition of recreational land shall be exempt from the requirements of the act. Recreational land is real property used primarily as a golf course or a swimming or tennis club facility, and assets incidental to the ownership of such property. In an acquisition that includes recreational land, the transfer of any property or assets that are not recreational land shall be subject to the requirements of the act and these rules as if they were being acquired in a separate acquisition.

(g) *Agricultural property.* An acquisition of agricultural property, assets incidental to the ownership of such property and associated agricultural assets shall be exempt from

the requirements of the act. Agricultural property is real property and assets that primarily generate revenues from the production of crops, fruits, vegetables, livestock, poultry, milk and eggs (activities within SIC Major Groups 01 and 02).

(1) Associated agricultural assets are assets integral to the agricultural business activities conducted on the property. Associated agricultural assets include, but are not limited to, inventory (*e.g.*, livestock, poultry, crops, fruit, vegetables, milk, eggs); structures that house livestock raised on the real property; and fertilizer and animal feed. Associated agricultural assets do not include processing facilities such as poultry and livestock slaughtering, processing and packing facilities.

(2) Agricultural property does not include any real property and assets either adjacent to or used in conjunction with processing facilities that are included in the acquisition.

(3) In an acquisition that includes agricultural property, the transfer of any assets that are not agricultural property, assets incidental to the ownership of such property or associated agricultural assets shall be subject to the requirements of the act and these rules as if such assets were being transferred in a separate acquisition.

(h) *Retail rental space; warehouses.* An acquisition of retail rental space (including shopping centers) or warehouses and assets incidental to the ownership of retail rental space or warehouses shall be exempt from the requirements of the act, except when the retail rental space or warehouse is to be acquired in an acquisition of a business conducted on the real property. In an acquisition that includes retail rental space or warehouses, the transfer of any assets that are neither retail rental space nor warehouses shall be subject to the requirements of the act and these rules as if such assets were being transferred in a separate acquisition.

Examples. 1. ''A,'' a major automobile manufacturer, builds a new automobile plant in anticipation of increased demand for its cars. The market does not improve and ''A'' never occupies the facility. ''A'' then sells the facility, which is fully equipped and ready for operation, to ''B,'' another automobile manufacturer. The acquisition of this plant, including any equipment and assets associated with its operation, is not exempt as an acquisition of a new facility, even though the facility has not produced any income, since ''A'' did not construct the facility for sale or hold it at all times solely for resale. Also, the acquisition is not exempt as an acquisition of unproductive property, because manufacturing facilities that have not yet begun operations are explicitly excluded from that exemption.

2. B, a subsidiary of ''A,'' a financial institution, acquired a newly constructed power plant, which it leased to ''X'' pursuant to a lease financing arrangement. ''A's'' acquisition of the plant through B was exempt under § 802.63(a) as a bona fide credit transaction entered into in the ordinary course of ''A's'' business. ''X'' operated the plant as sole lessee for the next eight years and now proposes to exercise an option to buy the plant for $62 million. ''X's'' acquisition of the plant is exempt pursuant to § 802.2(b). The plant is being acquired from B, the lessor, which held title to the plant for financing purposes, and the purchaser, ''X,'' has had sole and continuous possession and use of the plant since its construction.

3. ''A'' proposes to acquire a $100 million tract of wilderness land from ''B.'' Copper deposits valued at $17 million and timber reserves valued at $20 million are situated on the land and will be conveyed as part of this transaction. During the last three fiscal years preceding the sale, the property generated $50,000 from the sale of a small amount of timber cut from the reserves two years ago. ''A's'' acquisition of the wilderness land from ''B'' is exempt as an acquisition of unproductive real property because the property did not generate revenues exceeding $5 million during the thirty-six months preceding the acquisition. The copper deposits and timber reserves are by definition unproductive real property and, thus, are not separately subject to the notification requirements.

4. ''A'' proposes to purchase from ''B'' for $40 million an old steel mill that is not currently operating to add to ''A's'' existing steel production capacity. The mill has not generated revenues during the 36 months preceding the acquisition but contains equipment valued at $16 million that ''A'' plans to refurbish for use in its operations. ''A's'' acquisition of the mill and the land on which it is located is exempt as unproductive real property. However, the transfer of the equipment and any assets other than the unproductive property is not exempt and is separately subject to the notification requirements of the act.

5. ''A'' proposes to purchase two downtown lots, Parcels 1 and 2, from ''B'' for $40 million. Parcel 1, located in the southwest section, contains no structures or improvements. A hotel is located in the northeast section on Parcel 2, and it has generated $9 million in revenues during the past three years. The purchase of Parcel 1 is exempt if it qualifies as unproductive real property, *i.e.*, it has not generated annual revenues in excess of $5 million in the three fiscal years prior to the acquisition. Parcel 2 is not unproductive real property, but its acquisition is exempt under § 802.2(e) as the acquisition of a hotel.

6. ''A'' plans to purchase from ''B,'' a manufacturer, a newly-constructed building that ''B'' had intended to equip for use in its manufacturing operations. ''B'' was unable to secure financing to purchase the necessary equipment and ''A'', also a manufacturer, will be required to invest approximately $50 million in order to equip the building for use in its production operations. This building is not a new facility under § 802.2 (a), because it was not constructed or held by ''B'' for sale or resale. However, the acquisition of the building qualifies for exemption as unproductive real property pursuant to § 802.2(c)(1). The building is not yet a manufacturing facility since it does not contain equipment and requires significant capital investment before it can be used as a manufacturing facility.

7. ''A'' proposes to purchase from ''B,'' for $20 million, a 100 acre parcel of land that includes a currently operating factory occupying 10 acres. The other 90 adjoining acres are vacant and unimproved and are used by ''B'' for storage of supplies and equipment. The factory and the unimproved acreage have fair market values of $12 million and $8 million, respectively. The transaction is not exempt under § 802.2(c) because the vacant property is adjacent to property occupied by the operating factory. Moreover, if the 90 acres were not adjacent to the 10 acres occupied by the factory, the transaction would not be exempt because the 90 acres are being used in conjunction with the factory being acquired and thus is not unproductive property.

8. ''X'' proposes to buy a five-story building from ''Y.'' The ground floor of this building houses a department store, and ''X'' currently leases the third floor to operate a medical laboratory. The remaining three floors are used for offices. ''X'' is not acquiring the business of the department store. Because the ground floor is rental retail space, the acquisition of which is exempt under § 802.2(h), this part of the building is excluded from the determination of whether the building is used primarily for office purposes. The laboratory is therefore the only non-office use, and, since it makes up 25 percent of the remainder of the building, the building is used 75 percent for offices. Thus the building qualifies as an office building and its acquisition is therefore exempt under § 802.2(d).

9. ''A'' intends to acquire three shopping centers from ''B'' for a total of $80 million. The anchor stores in two of the shopping centers are department stores, the businesses of which ''A'' is buying from ''B'' as part of the overall transaction. The acquisition of the shopping centers is an acquisition of retail rental space that is exempt under § 802.2(h). However, ''A's'' acquisition of the department store business, including the portion of the shopping centers that the two department stores being purchased occupy, are separately subject to the notification requirements. If the value of these assets exceeds $15 million, ''A'' must comply with the requirements of the act for this part of the transaction.

10. ''A'' wishes to purchase from ''B'' a parcel of land for $30 million. The parcel contains a race track and a golf course. The golf course qualifies as recreational land pursuant to § 802.2(f), but the race track is not included in the exemption. Therefore, if the value of the race track is more than $15 million, ''A'' will have to file notification for the purchase of the race track.

11. ''A'' intends to purchase a poultry farm from ''B.'' The acquisition of the poultry farm is a transfer of agricultural property that is

exempt pursuant to § 802.2(g). If, however, ''B'' has a poultry slaughtering and processing facility on his farm that is included in the acquisition, ''A's'' acquisition of the farm is not exempt as an acquisition of agricultural property because agricultural property does not include property or assets adjacent to or used in conjunction with a processing facility that is included in an acquisition.

12. ''A'' proposes to purchase the prescription drug wholesale distribution business of ''B'' for $50 million. The business includes six regional warehouses used for ''B's'' national wholesale drug distribution business. Since ''A'' is acquiring the warehouses in connection with the acquisition of ''B's'' prescription drug wholesale distribution business, the acquisition of the warehouses is not exempt.

§ 802.3 Acquisitions of carbon-based mineral reserves.

(a) An acquisition of reserves of oil, natural gas, shale or tar sands, or rights to reserves of oil, natural gas, shale or tar sands together with associated exploration or production assets shall be exempt from the requirements of the act if the value of the reserves, the rights and the associated exploration or production assets to be held as a result of the acquisition does not exceed $500 million. In an acquisition that includes reserves of oil, natural gas, shale or tar sands, or rights to reserves of oil, natural gas, shale or tar sands and associated exploration or production assets, the transfer of any other assets shall be subject to the requirements of the act and these rules as if they were being acquired in a separate acquisition.

(b) An acquisition of reserves of coal, or rights to reserves of coal and associated exploration or production assets, shall be exempt from the requirements of the act if the value of the reserves, the rights and the associated exploration or production assets to be held as a result of the acquisition does not exceed $200 million. In an acquisition that includes reserves of coal, rights to reserves of coal and associated exploration or production assets, the transfer of any other assets shall be subject to the requirements of the act and these rules as if they were being acquired in a separate acquisition.

(c) Associated exploration or production assets means equipment, machinery, fixtures and other assets that are integral and exclusive to current or future exploration or production activities associated with the carbon-based mineral reserves that are being acquired. Associated exploration or production assets do not include the following:

(1) Any pipeline and pipeline system or processing facility which transports or processes oil and gas after it passes through the meters of a producing field located within reserves that are being acquired; and

(2) Any pipeline or pipeline system that receives gas directly from gas wells for transportation to a natural gas processing facility or other destination.

Examples: 1. ''A'' proposes to purchase from ''B'' for $550 million gas reserves that are not yet in production and have not generated any income. ''A'' will also acquire from ''B'' for $280 million producing oil reserves and associated assets such as wells, compressors, pumps and other equipment. The acquisition of the gas reserves is exempt as a transfer of unproductive property under § 802.2(c). The acquisition of the oil reserves and associated assets is exempt pursuant to § 802.3(a), since the value of the reserves and associated assets does not exceed the $500 million limitation.

2. ''A,'' an oil company, proposes to acquire for $180 million oil reserves currently in production along with field pipelines and treating and metering facilities which serve such reserves exclusively. The acquisition of the reserves and the associated assets are exempt. ''A'' will also acquire from ''B'' for $16 million a natural gas processing plant and its associated gathering pipeline system. This acquisition is not exempt since § 802.3(c) excludes these assets from the exemption in § 802.3 for transfers of associated exploration or production assets.

3. ''A,'' an oil company, proposes to acquire a coal mine currently in operation and associated production assets for $90 million from ''B,'' an oil company. ''A'' will also purchase from ''B'' producing oil reserves valued at $100 million and an oil refinery valued at $13 million. The acquisition of the coal mine and the oil reserves is exempt pursuant to § 802.3. Although § 802.3(c) excludes the refinery from the exemption in § 802.3 for transfers of associated exploration and production assets, ''A's'' acquisition of the refinery is not subject to the notification requirements of the act because its value does not exceed $15 million.

4. ''X'' proposes to acquire from ''Z'' coal reserves which, together with associated exploration assets, are valued at $230 million. Since the value of the reserves and the assets exceeds the $200 million limitation in § 802.3(b), this transaction is not exempt under § 802.3. However, if the coal reserves qualify as unproductive property under the requirements of § 802.2(c), their acquisition, along with the acquisition of their associated assets, would be exempt.

§ Section 802.4 Acquisitions of voting securities of issuers holding certain assets the direct acquisition of which is exempt.

(a) An acquisition of voting securities of an issuer whose assets together with those of all entities it controls consist or will consist of assets whose purchase would be exempt from the requirements of the act pursuant to section 7A(c)(2) of the act, § 802.2, § 802.3 or § 802.5 of these rules is exempt from the reporting requirements if the acquired issuer and all entities it controls do not hold other non-exempt assets with an aggregate fair market value of more than $15 million.

(b) As used in paragraph (a) of this section, ''issuer'' means a single issuer, or two or more issuers controlled by the same acquired person.

(c) In connection with paragraph (a) of this section and § 801.15 (b), the value of the assets of an issuer whose voting securities are being acquired pursuant to this section shall be the fair market value, determined in accordance with § 801.10(c).

Examples: 1. ''A,'' a real estate investment company, proposes to purchase 100 percent of the voting securities of C, a wholly-owned subsidiary of ''B,'' a construction company. C's assets are a newly constructed, never occupied hotel, including fixtures, furnishings and insurance policies. The acquisition of the hotel would be exempt under § 802.2(a) as a new facility and under § 802.2(d). Therefore, the acquisition of the voting securities of C is exempt pursuant to § 802.4(a) since C holds assets whose direct purchase would be exempt under § 802.2 and does not hold non-exempt assets exceeding $15 million in value.

2. ''A'' proposes to acquire 60 percent of the voting securities of C from ''B.'' C's assets consist of a portfolio of mortgages valued at $20 million and a small manufacturing plant valued at $6 million. The manufacturing plant is an operating unit for purposes of § 802.1(a). Since the acquisition of the mortgages would be exempt pursuant to section 7A(c)(2) of the act and since the value of the non-exempt manufacturing plant is less than $15 million, this acquisition is exempt under § 802.4(a).

3. ''A'' proposes to acquire from ''B'' 100 percent of the voting securities of each of three issuers, M, N and O, simultaneously. M's assets consist of oil reserves worth $160 million and coal reserves worth $40 million. N has assets consisting of $130 million of gas reserves and $100 million of coal reserves. O's assets are oil shale reserves worth $140 million and a coal mine worth $80 million. Since ''A'' is simultaneously acquiring the voting securities of three issuers from the same acquired person, it must aggregate the assets of the issuers to determine if any of the limitations in § 802.3 is exceeded. As a result of aggregating the assets of M, N and O, ''A's'' holdings of oil and gas reserves are below the $500 limitation for such assets in § 802.3(a). However, the aggregated holdings exceed the $200 million limitation for coal reserves in § 802.3(b). ''A's'' acquisition therefore is not exempt, and it must report the entire transaction.

§ 802.5 Acquisitions of investment rental property assets.

(a) Acquisitions of investment rental property assets shall be exempt from the requirements of the act.

(b) Investment rental property assets. ''Investment rental property assets'' means real property that will not be

rented to entities included within the acquiring person except for the sole purpose of maintaining, managing or supervising the operation of the real property, and will be held solely for rental or investment purposes. In an acquisition that includes investment rental property assets, the transfer of any property or assets that are not investment rental property assets shall be subject to the requirements of the act and these rules as if they were being acquired in a separate transaction. Investment rental property assets include:

(1) Property currently rented,

(2) Property held for rent but not currently rented,

(3) Common areas on the property, and

(4) Assets incidental to the ownership of property, which may include cash, prepaid taxes or insurance, rental receivables and the like.

Example: 1. ''X'', a corporation, proposes to purchase a sports/entertainment complex which it will rent to professional sports teams and promoters of special events for concerts, ice shows, sporting events and other entertainment activities. ''X'' will provide office space in the complex for ''Y'', a management company which will maintain and manage the facility for ''X.'' This acquisition is an exempt acquisition of investment rental property assets since ''X'' intends to rent the facility to third parties and is providing space within the facility to a management company solely to maintain, manage or supervise the operation of the facility on its behalf. If, however, ''X'' controls Z, a concert promoter to whom it also intends to rent the complex, the acquisition would not be exempt under § 802.5, since the property would not meet the requirements of § 802.5(b)(1).

2. ''X'' intends to buy from ''Y'' a development commonly referred to as an industrial park. The industrial park contains a warehouse/distribution center, a retail tire and automobile parts store, an office building, and a small factory. The industrial park also contains several parcels of vacant land. If ''X'' intends to acquire this industrial park as investment rental property, the acquisition will be exempt pursuant to § 802.5. If, however, ''X'' intends to use the factory for its own manufacturing operations, this exemption would be unavailable. The exemptions in § 802.2 for warehouses, rental retail space, office buildings, and undeveloped land may still apply and, if the value of the factory is $15 million or less, the entire transaction may be exempted by that section.

By direction of the Commission,

Donald S. Clark,

Secretary.

[FR Doc. 96–7529 Filed 3–27–96; 8:45 am]

BILLING CODE 6750–01–P

SECURITIES AND EXCHANGE COMMISSION

17 CFR Part 200

[Release No. 34–37022; File No. S7–40–92]

RIN 3235–AF91

Rules of Practice

AGENCY: Securities and Exchange Commission.

ACTION: Final rule; Correction.

SUMMARY: This document contains a correction to the final regulations which were published on June 23, 1995 (60 FR 32738). These regulations relate to the Commission's procedural rules that govern administrative proceedings.

EFFECTIVE DATE: July 24, 1995.

FOR FURTHER INFORMATION CONTACT: Frances R. Sienkiewicz, Office of the Secretary, 202–942–7072.

SUPPLEMENTARY INFORMATION: The Rules of Practice that are the subject of this correction are the procedural rules that govern administrative proceedings.

Correction of Publication

Accordingly, the publication on June 23, 1995 of the Rules of Practice, which were the subject of FR Doc. No. 95–14750, is corrected as follows:

1. On page 32794, in column one, amendment 7 is revised to read:

§ 200.30–7 [Corrected]

7. In § 200.30–7, in paragraph (a)(3), remove the words ''Rule 13 of the Commission's rules of practice, § 201.13'' and in their place, add the words ''Rule 161 of the Commission's Rules of Practice, § 21.161'', and in paragraph (a)(4), remove the words ''§ 201.13'' and in their place, add the words ''Rule 161 of the Commission's Rules of Practice, § 201.161''.

Dated: March 25, 1996.

Jonathan G. Katz,

Secretary.

[FR Doc. 96–7537 Filed 3–27–96; 8:45 am]

BILLING CODE 8010–01–M

DEPARTMENT OF JUSTICE

Drug Enforcement Administration

21 CFR Part 1308

[DEA No. 148-I]

Exempt Chemical Preparations

AGENCY: Drug Enforcement Administration, Department of Justice.

ACTION: Interim Rule and Request for Comments.

SUMMARY: This interim rule amends the list of exempt chemical preparations set forth in section 1308.24(i) of Title 21 of the Code of Federal Regulations. This action is in response to DEA's periodic review of the exempt chemical preparation list and of new applications for exemptions which have been approved by DEA. This action is being done by interim rule because prior notice is unnecessary. The list contains preparations which have already been exempted from the application of specific provisions of the Comprehensive Drug Abuse Prevention and Control Act of 1970, and from certain Drug Enforcement Administration Regulations.

EFFECTIVE DATE: March 28, 1996. Comments must be submitted on or before May 28, 1996.

ADDRESSES: Comments and objections should be submitted to the Deputy Assistant Administrator, Office of Diversion Control, Drug Enforcement Administration, Washington, DC 20537; Attention: Federal Register Representative/CCR.

FOR FURTHER INFORMATION CONTACT: Howard McClain, Jr., Chief, Drug & Chemical Evaluation Section, Drug Enforcement Administration, Washington, DC 20537, Telephone: (202) 307-7183.

SUPPLEMENTARY INFORMATION: The Controlled Substances Act as amended by the Dangerous Drug Diversion Control Act of 1984 authorizes the Attorney General in accordance with 21, U.S.C. 811 (g)(3)(B) to exempt from specific provisions of the Act, a compound, mixture, or preparation which contains any controlled substance, which is not for administration to a human being or animal and which is packaged in such form or concentration, or with adulterants or denaturants, so that, as packaged, it does not present any significant potential for abuse. This authority has been delegated to the Deputy Assistant Administrator, Office of Diversion Control, Drug Enforcement Administration, 28 CFR 0.104.

The Deputy Assistant Administrator has received applications pursuant to section 1308.23 of Title 21 of the Code of Federal Regulations requesting approval of exempt status provided for in 21 CFR 1308.24. The Deputy Assistant Administrator has found that each of the following preparations and mixtures is intended for laboratory, industrial, educational, or special research purposes, is not intended for general administration to man or animal, and either (a) contains no narcotic controlled substances and is

packaged in such a form or concentration that the packaged quantity does not present any significant potential for abuse, (b) contains either a narcotic or non-narcotic controlled substance and one or more adulterating or denaturing agents in such a manner, combination, quantity, proportion, or concentration that the preparation or mixture does not present any potential for abuse, or (c) the formulation of such preparation or mixture incorporates methods of denaturing or other means so that the controlled substance cannot in practice be removed, and therefore the preparation or mixture does not present any significant potential for abuse. The Deputy Assistant Administrator has found that exemption of the following chemical preparations and mixtures is consistent with the public health and safety as well as the needs of the researchers, chemical analysts, and suppliers of these products.

The listing of products in 21 CFR 1308.24(i) may exempt persons who handle them from application of sections 302, 303, 305, 306, 307, 308, 309, 1002, 1003, and 1004 of the Act and section 1301.74 of the regulations. The Deputy Assistant Administrator hereby certifies that these matters will have no significant impact upon small businesses or other entities within the meaning and intent of the Regulatory Flexibility Act, 5 U.S.C. 601 et seq. Accordingly, the Deputy Assistant Administrator certifies this action will have no impact on the ability of small businesses to compete and he therefore determines that no regulatory flexibility analysis is required.

This action has been analyzed in accordance with the principles and criteria contained in Executive Order 12612, and it has been determined that this matter does not have sufficient federalism implications to require the preparation of a Federalism Assessment.

The Office of Management and Budget (OMB) has determined that listings of exempt chemical preparations are exempt from centralized review under Executive Order 12866.

List of Subjects in 21 CFR Part 1308

Administrative practice and procedure, Drug traffic control, Narcotics, Prescription drugs.

Under the authority vested in the Attorney General by section 202(d) of the Act (21 U.S.C. 811 (g)(3)(B)) and delegated to the Administrator of the Drug Enforcement Administration by regulations of the Department of Justice (28 CFR Part 0.100), and redelegated to the Deputy Assistant Administrator, Office of Diversion Control, Drug Enforcement Administration, the Deputy Assistant Administrator hereby amends 21 CFR Part 1308 as set forth below.

PART 1308—SCHEDULES OF CONTROLLED SUBSTANCES

1. The authority citation for 21 CFR part 1308 continues to read as follows:

Authority: 21 U.S.C. 811, 812, 871(b) unless otherwise noted.

2. In § 1308.24(i), the table is revised to read as follows:

§ 1308.24 Exempt Chemical Preparations.

* * * * *

(i) * * *

EXEMPT CHEMICAL PREPARATIONS

Supplier	Product name	Form	Date
Aalto Scientific, LTD	Therapeutic Drug Monitoring Control Level I, II, III Freeze Dried.	Vial: 5ml	4/09/91
Abbott Laboratories	125I Cholylglycyltyrosine Reagent Solution, No. 7816	Plastic Bottle: 20ml	4/07/78
Abbott Laboratories	ADx Benzoylecgonine Fluorescein Tracer Solution	Bottle: 3.2 ml	12/02/86
Abbott Laboratories	ADx Cannabinoids Fluorescein Tracer Solution	Bottle: 3.2ml	12/02/86
Abbott Laboratories	ADx Cannabinoids Reagent Pack (No. 9671-55)	Reagent Pack: 50 tests	12/02/86
Abbott Laboratories	ADx Cocaine Metabolite Fluorescein Tracer Solution, No. 9670-T, No. 9670T0013.	Vial: 3.2ml, Kit: 100 vials	4/18/89
Abbott Laboratories	ADx Cocaine Metabolite Reagent Pack, No. 9670-55	50 Test Unit	4/18/89
Abbott Laboratories	ADx Opiates Fluorescein Tracer Solution, No. 9673-T, No. 9673T0013.	Vial: 3.2ml, Kit: 100 vials	4/18/89
Abbott Laboratories	ADx Opiates Reagent Pack, No. 9673-55	50 Test Unit	4/18/89
Abbott Laboratories	ADx Propoxyphene Fluorescein Tracer Solutions Item No. 9675T0011.	Box: 100 bottles or less	11/30/90
Abbott Laboratories	ADx Propoxyphene Reagent Pack Item No.9675-55	Kit: 50 test	11/30/90
Abbott Laboratories	Advisor (4 Track); Code 9A18-21	Kit: 40 Discs	3/25/94
Abbott Laboratories	Advisor Cannabinoids Bulk Tracer No.76224	Flasks: 6L, 4L, 2L, 1L, 500ml, 250ml, 200ml, 100ml; Bottles: 950ml, 500ml, 100ml, 50ml, 5ml; Amp: 20ml, 10ml, 5ml, 2ml.	4/10/92
Abbott Laboratories	Advisor Card & Cover No.07A15	Box: 2000 Cards	4/10/92
Abbott Laboratories	Advisor Card & Tracer No.07A14	Box: 2000 Cards	4/10/92
Abbott Laboratories	Advisor Card with Cover; Code # 05B08	Box: 2000 Cards	3/25/94
Abbott Laboratories	Advisor Card with Tracer; Code # 05B07	Box: 2000 Cards	3/25/94
Abbott Laboratories	Advisor Cocaine Bulk Tracer (in-process) No.77458A	Flasks: 6L, 4L, 2L, 1L, 500ml, 250ml, 200ml, 100ml; Bottles: 950ml, 500ml, 100ml, 50ml, 5ml; Amp: 20ml, 10ml, 5ml, 2ml.	6/08/92
Abbott Laboratories	Advisor Cocaine Bulk Tracer No.77458	Flasks: 6L, 4L, 2L, 1L, 500ml, 250ml, 200ml, 100ml; Bottles: 950ml, 500ml, 100ml, 50ml, 5ml; Amp: 20ml, 10ml, 5ml, 2ml.	4/10/92
Abbott Laboratories	Advisor Controls, Code # 6A63-10	Kit: 2 Bottles	1/25/94
Abbott Laboratories	Advisor Drug of Abuse Screening System No.6A60-10	Kit: 10 Discs	4/10/92
Abbott Laboratories	Advisor Drug of Abuse Screening System No.6A60-21	Kit: 40 Discs	4/10/92

EXEMPT CHEMICAL PREPARATIONS—Continued

Supplier	Product name	Form	Date
Abbott Laboratories	Advisor Opiates Bulk Tracer (in-process) No.78692A	Flasks: 6L, 4L, 2L, 1L, 500ml, 250ml, 200ml, 100ml; Bottles: 950ml, 500ml, 100ml, 50ml, 5ml; Amp: 20ml, 10ml, 5ml, 2ml.	6/08/92
Abbott Laboratories	Advisor Opiates Bulk Tracer No.78692	Flasks: 6L, 4L, 2L, 1L, 500ml, 250ml, 200ml, 100ml; Bottles: 950ml, 500ml, 100ml, 50ml, 5ml; Amp: 20ml, 10ml, 5ml, 2ml.	4/10/92
Abbott Laboratories	Advisor Positive Control, Bulk, Code # 82979	Carboy: 50, 45, 20, 10L; Flask: 6, 4, 2, 1L; 500, 250, 200, 125, 100, 50ml; Bottle: 8, 4, 2, 1L; 500, 250, 125, 50, 30, 10, 5ml.	1/25/94
Abbott Laboratories	Advisor Positive Control, Code # 6A63P	Bottle: 5ml	1/25/94
Abbott Laboratories	Advisor Positive Control, In-Process, Code # 6A63P001	Box: 100 Bottles	1/25/94
Abbott Laboratories	Advisor Reaction Disc No.6A60B	Disc: 1 Card	4/10/92
Abbott Laboratories	Advisor Reaction Discs (4 Track); Code # 9A18	Inner Carton: 20 Discs	3/25/94
Abbott Laboratories	Advisor Reaction Discs No.6A60	Carton: 20 Discs	4/10/92
Abbott Laboratories	Amphetamine Bulk Calibrators, B-F	Carboy: 10L Flask: 6L, 2L, 1L, 250ml, 200ml.	10/09/85
Abbott Laboratories	Amphetamine Bulk Controls, L and H	Flask: 2 liter	12/09/85
Abbott Laboratories	Amphetamine Class Bulk Calibrator B-F	50L, 45L, 20L, 10L, 8L, 6L, 4L, 2L, 1L, 500ml, 250ml, 200ml, 125ml, 100ml, 50ml, 30ml, 20ml, 15ml, 10ml, 5ml, 2ml.	3/01/88
Abbott Laboratories	Amphetamine Class Bulk Control L and H	50L, 45L, 20L, 10L, 8L, 6L, 4L, 2L, 1L, 500ml, 250ml, 200ml, 125ml, 100ml, 50ml, 30ml, 20ml, 15ml, 5ml, .2ml.	3/01/88
Abbott Laboratories	Amphetamine Class Bulk Tracer: No. 94699	50L, 45L, 20L, 10L, 8L, 6L, 4L, 2L, 1L, 500ml, 250ml, 200ml, 125ml, 100ml, 50ml, 30ml, 20ml, 15ml, 10ml, 5ml, 2ml.	3/01/88
Abbott Laboratories	Amphetamine Class QC Primary B–F, L, M, H No. 9667 (B–F, L, M, H) QC.	Carboy: 10L Flask: 4L, 2L, 1L, 500 ml, 250 ml, 200 ml, 100 ml Bottle: 5ml.	11/22/88
Abbott Laboratories	Amphetamine Class Stock Tracer: No. 94700	Bottle: 30 ml	3/01/88
Abbott Laboratories	Amphetamine Stock Standard No. 97072, 97072 A–B	Carboy: 20L, 10L Flask: 4L, 2L, 1L, 500 ml, 250 ml, 200 ml, 100 ml Bottle: 950ml, 500ml, 100ml, 5ml.	11/22/88
Abbott Laboratories	Amphetamine Stock Standard, No. 97072	Bottle: 125ml	9/30/85
Abbott Laboratories	Amphetamine/ Methamphetamine II Controls (L, M, H) No. 1A99–L, M, H.	5 ML Vial	8/26/88
Abbott Laboratories	Amphetamine/ Methamphetamine II Controls No. 1A99–10	Kit: 3 Vials	8/26/88
Abbott Laboratories	Amphetamine/ Methamphetamine QC Primary B–F, L, M, H No. 9668 (B–F, L, M, H) QC.	Carboy: 10L Flask: 4L, 2L, 1L, 500 ml, 250 ml, 200 ml, 100 ml Bottle: 5ml.	11/22/88
Abbott Laboratories	Amphetamine/ Methamphetamine QC Primary Standard Control M, No. 9668–M.	Bottle: 5 ml	11/10/87
Abbott Laboratories	Amphetamine/Metamphetamine QC Primary Bulk Control M, No. 9668–M.	Flasks: 1 liter, 250 ml, and 200 ml.	11/10/87
Abbott Laboratories	Amphetamine/Methamphetamine (II) QC Primary B–F, L, M, H No. 1A99 (B–F, L, M, H) QC.	Carboy: 10L Flask: 4L, 2L, 1L, 500 ml, 250 ml, 200 ml, 100 ml Bottle: 5ml.	11/22/88
Abbott Laboratories	Amphetamine/Methamphetamine II Bulk Calibrator B, C, D, E, F; No. 01A99–B, C, D, E, F.	Carboy: 20L, 10L, 6L, 2L, 1L, 250ml, 200ml.	7/14/89
Abbott Laboratories	Amphetamine/Methamphetamine II Bulk Calibrators B–F Code No. 1A99 (B–F).	50L, 45.5L, 20 L, 19L, 13.25L, 13L, 10 L, 9.5L, 9L Carboy; 6 L, 4L, 2 L, 1 L, 250 ml, 200 ml Flask.	8/26/88
Abbott Laboratories	Amphetamine/Methamphetamine II Bulk Control L, M, H, ; No. 01A99–L, M, H.	Carboy: 20L, 10L, Flask: 6L, 2L, 1L, 250ml, 200ml.	7/14/89
Abbott Laboratories	Amphetamine/Methamphetamine II Bulk Controls (L, M, H) Code No. 1A99 (L, M, H).	50L, 45.5L, 20 L, 19L, 13.25L, 13L, 10 L, 9.5L, 9L Carboy; 6 L, 4L, 2 L, 1 L, 250 ml, 200 ml Flask.	8/26/88

EXEMPT CHEMICAL PREPARATIONS—Continued

Supplier	Product name	Form	Date
Abbott Laboratories	Amphetamine/Methamphetamine II Bulk Controls, No. 1A99X, Y, Z.	Carboy: 20L, 10L, Flask: 6L, 2L, 1L, 250ml, 200ml.	1/19/89
Abbott Laboratories	Amphetamine/Methamphetamine II Bulk Master Calibrator W, 3B27–W.	Carboys: 50, 45, 20, 10L; Flasks: 6, 4, 2, 1L; 500, 250, 200, 125, 100, 50ml.	6/12/95
Abbott Laboratories	Amphetamine/Methamphetamine II Calibrators B–F No. 1A99 B–F.	5 ml Vial	8/26/88
Abbott Laboratories	Amphetamine/Methamphetamine II Control X, Y, Z; No. 1A99–02, 03, 04.	Kit: 100 vials	1/19/89
Abbott Laboratories	Amphetamine/Methamphetamine II Control X, Y, Z; No. 1A99X, Y, Z.	Vial: 5ml	1/19/89
Abbott Laboratories	Amphetamine/Methamphetamine II QC Primary 2–6 QT, NG, CO, PS No. 1A99 2–6 QT–QC & NG/CO/PS–QC.	Carboy: 20, 10L; Flask: 6, 4, 2, 1L, 500, 250, 200, 100ml; Bottle: 950, 500, 100, 50, 5ml; Ampule: 20, 10, 5, 2ml.	2/20/91
Abbott Laboratories	Amphetamine/Methamphetamine II QC Primary 8QT No. 1A998QT–QC.	Carboy: 20L, 10L; Flask: 6, 4, 2, 1L, 500, 250, 200, 100ml; Bottle: 950, 500, 100, 50, 5ml; Ampule: 20, 10, 5, 2ml.	10/25/91
Abbott Laboratories	AxSYM Amphetamine/Methamphetamine II Master Calibrator 2.	Bottle: 5ml	6/12/95
Abbott Laboratories	AxSYM Amphetamine/Methamphetamine II Master Calibrators, 3B27–30.	Kit: 2 Bottles, 5ml each	6/12/95
Abbott Laboratories	AxSYM Barbiturates II U Master Calibrator 2	Bottle: 5ml	5/10/95
Abbott Laboratories	AxSYM Barbiturates II U Master Calibrators	Kit: 2 Bottles	5/10/95
Abbott Laboratories	AxSYM Benzodiazepines Master Calibrator 2	Bottle: 5ml	5/10/95
Abbott Laboratories	AxSYM Benzodiazepines Master Calibrators	Kit: 2 Bottles	5/10/95
Abbott Laboratories	AxSYM Cannabinoids Fluorescin Tracer; Code 3B28T0001	Bottles: 35, 20, 15ml; Box: 100 vials; Tray: 200vials.	6/02/94
Abbott Laboratories	AxSYM Cannabinoids Master Calibrator 2	Bottle: 5ml	5/10/95
Abbott Laboratories	AxSYM Cannabinoids Master Calibrators	Kit: 2 Bottles	5/10/95
Abbott Laboratories	AxSYM Cannabinoids Reagent Pack	Kit: 100 Tests	7/27/94
Abbott Laboratories	AxSYM Cocaine Metabolite Reagent Pack	Kit: 100 Tests	7/27/94
Abbott Laboratories	AxSYM Cocaine Metabolite Fluorescin Tracer Solution; Code 3B24T0001.	Bottles: 35, 20, 15ml; Box: 100 vials; Tray: 200 vials.	6/02/94
Abbott Laboratories	AxSYM Cocaine Metabolite Master Calibrator 2	Bottle: 5ml	5/10/95
Abbott Laboratories	AxSYM Cocaine Metabolite Master Calibrators	Kit: 2 Bottles	5/10/95
Abbott Laboratories	AxSYM Methadone Master Calibrator 2	Bottle: 5ml	6/12/95
Abbott Laboratories	AxSYM Methadone Master Calibrators, 3B31–30	Kit: 2 Bottles, 5ml each	6/12/95
Abbott Laboratories	AxSYM Opiates Fluorescin Tracer Solution; Code 3B25T0001	Bottles: 35, 20, 15ml; Box: 100 vials; Tray: 200 vials.	6/02/94
Abbott Laboratories	AxSYM Opiates Master Calibrator 2	Bottle: 5ml	5/10/95
Abbott Laboratories	AxSYM Opiates Master Calibrators	Kit: 2 Bottles	5/10/95
Abbott Laboratories	AxSYM Opiates Reagent Pack	Kit: 100 Tests	7/27/94
Abbott Laboratories	AxSYM Phencyclidine Master Calibrator 2	Bottle: 5ml	6/12/95
Abbott Laboratories	AxSYM Phencyclidine Master Calibrators, 3B26–30	Kit: 2 Bottles, 5ml each	6/12/95
Abbott Laboratories	AxSYM Phenobarbital Calibrator B, Code # 7A70–B	Vial: 5ml	1/25/94
Abbott Laboratories	AxSYM Phenobarbital Calibrator C, Code # 7A70–C	Vial: 5ml	1/25/94
Abbott Laboratories	AxSYM Phenobarbital Calibrator D, Code # 7A70–D	Vial: 5ml	1/25/94
Abbott Laboratories	AxSYM Phenobarbital Calibrator E, Code 7A70–E	Vial: 5ml	1/25/94
Abbott Laboratories	AxSYM Phenobarbital Calibrator F, Code 7A70–F	Vial: 5ml	1/25/94
Abbott Laboratories	AxSYM Phenobarbital Calibrators (B–F), Code # 7A70–01	Kit: 6 Vials	1/25/94
Abbott Laboratories	AxSYM Phenobarbital Control H, Code # 7A70–H	Vial: 10ml	1/25/94
Abbott Laboratories	AxSYM Phenobarbital Control M, 7A70–M	Vial: 10ml	1/25/94
Abbott Laboratories	AxSYM Phenobarbital Controls (L, M, H), Code # 7A70–L	Kit: 3 Vials	1/25/94
Abbott Laboratories	Barbital Buffer, 0.06 M; Reagent Solution No. 7824	Plastic Bottle: 2.5ml	4/07/78
Abbott Laboratories	Barbiturate II U Control L, M, H; No. 9669 L, M, H–11	Bottle: 5 ml	10/17/89
Abbott Laboratories	Barbiturates Bulk Calibrator B–F; No. 9669 B–F	Carboy: 50L, 45.5L, 20L, 19L, 13.25L, 13L, 10L, 9.5L, 9L, 6L, 4L, 2L, 1L, 250ml, 200ml.	7/01/88
Abbott Laboratories	Barbiturates Bulk Control L, H; No. 9669 L, H	Carboy: 50L, 45.5L, 20L, 19L, 13.25L, 13L, 10L, 9.5, 9L, 6L, 4L, 2L, 1L, 250ml, 200ml.	7/01/88
Abbott Laboratories	Barbiturates Bulk Controls, No. 9669X, Y, Z	Carboy: 20L, 10L, Flask: 6L, 2L, 1L, 250ml, 200ml.	1/19/89
Abbott Laboratories	Barbiturates Control X, Y, Z; No. 9669X, Y, Z	Vial: 5ml	1/19/89
Abbott Laboratories	Barbiturates II QC Primary NG, CO, PS; No. 9669 NG/CO/PS–11–QC.	Carboy: 20, 10L; Flask: 6, 4, 2, 1L, 500, 250, 200, 100ml; Bottle: 950, 500, 100, 50, 5ml; Ampule: 20, 10, 5, 2ml.	2/20/91

EXEMPT CHEMICAL PREPARATIONS—Continued

Supplier	Product name	Form	Date
Abbott Laboratories	Barbiturates II U Bulk Calibrators B–F; No. 9669 B–F–05	Carboy: 50L, 45.5L, 20L, 19L, 13.25L, 13L, 10L, 9.5L, 9L, 6L, 4L, 2L, 1L, Flask: 250ml, 200ml.	10/17/89
Abbott Laboratories	Barbiturates II U Bulk Controls L, M, H; No. 9669 L, M, H–11	Carboy: 50L, 45.5L, 20L, 19L, 13.25L, 13L, 10L, 9.5L, 9L, 6L, 4L, 2L, 1L, Flask: 250ml, 200ml.	10/17/89
Abbott Laboratories	Barbiturates II U Bulk Master Calibrator W	Carboys: 50, 45, 20, 10L; Flasks: 6, 4, 2, 1L; 500, 250, 200, 125, 100, 50ml.	5/10/95
Abbott Laboratories	Barbiturates II U Calibrators B–F; No. 9669 B–F–05	Bottle: 5 ml	10/17/89
Abbott Laboratories	Barbiturates II U Controls L, M, H; No. 9661–11	Kit: 3 vials	10/17/89
Abbott Laboratories	Barbiturates II U QC Primary B–F; No. 9669 B–F–05 QC	Carboy: 10L, Flask: 4L, 2L, 1L, 500ml, 250ml, 200ml, 100ml, Bottle: 950ml, 500ml, 100ml, 5ml.	10/17/89
Abbott Laboratories	Barbiturates II U QC Primary L, M, H; No. 9669 L, M, H–11 QC.	Carboy: 10L, Flask: 4L, 2L, 1L, 500ml, 250ml, 200ml, 100ml, Bottle: 950ml, 500ml, 100ml, 5ml.	10/17/89
Abbott Laboratories	Barbiturates QC Primary B–F, L, M, H No. 9669 (B–F, L, M, H) QC.	Carboy: 10L Flask: 4L, 2L, 1L, 500 ml, 250 ml, 200 ml, 100 ml Bottle: 5 ml.	11/22/88
Abbott Laboratories	Barbiturates QC Primary Bulk Control M, No. 9669–M	Flasks: 1 liter, 250 ml, and 200 ml.	11/10/87
Abbott Laboratories	Barbiturates QC Primary Standard Control M, No. 9669–M	Bottle: 5 ml	11/10/87
Abbott Laboratories	Barbiturates QC Primary X, No. 9669X–QC	Carboy: 10L, Flask: 4L, 2L, 1L, 500ml, 250ml, 200ml, 100ml, Bottle: 5ml.	6/05/89
Abbott Laboratories	Barbiturates Serum Bulk Calibrator B–F, No. 9679 B–F	Carboy, Flask, Bottle or Ampule: 50, 45, 20, 10, 8, 6, 4, 2, 1–(L); 500, 250, 200, 125, 100, 50, 30, 20, 15, 10, 5, 2–(ml).	1/03/89
Abbott Laboratories	Barbiturates Serum Bulk Control L, M, H; No. 9676 L, M, H	Carboy: 20L, 10L, Flask: 6L, 2L, 1L, 250ml, 200ml.	1/03/89
Abbott Laboratories	Barbiturates Serum Calibrators B–F, No. 9679–01	Kit: 6 vials	1/03/89
Abbott Laboratories	Barbiturates Serum Calibrators B/F, No. 9679 B/F	Bottle: 5ml	1/03/89
Abbott Laboratories	Barbiturates Serum Controls L, M, H; No. 9679 L, M, H	Bottle: 5ml	1/03/89
Abbott Laboratories	Barbiturates Serum Controls L, M, H; No. 9679–10	Kit: 3 vials	1/03/89
Abbott Laboratories	Barbiturates Serum QC Primary B–F, L, M, H; No. 9679 (B–F, L, M, H)–QC.	Carboy: 10L, Flask: 4L, 2L, 1L, 500ml, 250ml, 200ml, 100ml, Bottle: 5ml.	1/03/89
Abbott Laboratories	Benzodiazepine Serum QC Primary B–F, L, M, H No. 9682 (B–F, L, M, H)–QC.	Carboy: 10L Flask: 4L, 2L, 1L, 500 ml, 250 ml, 200 ml, 100 ml Bottle: 5 ml.	11/22/88
Abbott Laboratories	Benzodiazepines Bulk Calibrator No. 9674 B–F	Carboy: 50L, 45.5L, 20L, l9.5L, 19L, 13.25L, 13L, 10L, 9L, 6L, 4L, 2L, 1L, 250ml, 200ml.	7/18/88
Abbott Laboratories	Benzodiazepines Bulk Control L, H No. 9674 L, H	Carboy: 50L, 45.5L, 20L, 19L, 13.25zl, 13L, 10L, 9.5, 9L, 6L, 4L, 2L, 1L, 250ml, 200ml,.	7/18/88
Abbott Laboratories	Benzodiazepines Bulk Master Calibrator W	Carboys: 50, 45, 20, 10L; Flasks: 6, 4, 2, 1L; 500, 250, 200, 125, 100, 50ml.	5/10/95
Abbott Laboratories	Benzodiazepines QC Primary Bulk Control M, No. 9674–M	Flasks: 1 liter, 250 ml, and 200 ml.	11/10/87
Abbott Laboratories	Benzodiazepines QC Primary Bulk Control M, No. 9674–M	Flasks: 1 liter, 250 ml, and 200 ml.	11/10/87
Abbott Laboratories	Benzodiazepines QC Primary NG, CO, PS No. 9674NG/CO/PS–QC.	Carboy: 20, 10L; Flask: 6, 4, 2, 1L, 500, 250, 200, 100ml; Bottle: 950, 500, 100, 50, 5ml; Ampule: 20, 10, 5, 2ml.	2/20/91
Abbott Laboratories	Benzodiazepines QC Primary, B–F, L, M, H No. 9674 (B–F, L, M, H) QC.	Carboy: 10L Flask: 4L, 2L, 1L, 500 ml, 250 ml, 200 ml, 100 ml Bottle: 5ml.	11/22/88
Abbott Laboratories	Benzodiazepines Serum Bulk Calibrators B–F: Code No. 9682 B–F.	Carboy: 10 liter; Flask: 6 liter, 2 liter.	12/07/87
Abbott Laboratories	Benzodiazepines Serum Bulk Calibrators: No. 9682 B–F	Carboy: 20 liters, 10 liters; Flask: 6 liters, 2 liters, 1 liter.	5/02/88

EXEMPT CHEMICAL PREPARATIONS—Continued

Supplier	Product name	Form	Date
Abbott Laboratories	Benzodiazepines Serum Bulk Controls L, M, & H: Code No. 9682 L, M, & H.	Carboy: 10 liter; Flask: 6 liter, 2 liter.	12/07/88
Abbott Laboratories	Benzodiazepines Serum Bulk Controls: No. 9682 L, M, H	Carboy: 20 liters, 10 liters; Flask: 6 liters, 2 liters, 1 liter, 250 ml, 200 ml.	5/02/88
Abbott Laboratories	Benzoylecgonine Stock Standard No. 97182, 97182 A–B	Carboy: 20L, 10L Flask: 4L, 2L, 1L, 500 ml, 250 ml, 200 ml, 100 ml, Bottle: 950ml, 500ml, 100ml, 5ml.	11/23/88
Abbott Laboratories	Benzoylecgonine Stock Standard, No. 97182	Bottle: 125ml	11/21/85
Abbott Laboratories	CG RIA Diagnostic Kit No. 7815	Kit: 100 tests	4/07/78
Abbott Laboratories	Cannabinoids—GS Bulk Controls, No. 3897X, Y, Z	Carboy: 20L, 10L, Flask: 6L, 2L, 1L, 250ml, 200ml.	1/19/89
Abbott Laboratories	Cannabinoids—GS Control X, Y, Z; No. 3897–02, 03, 04	Kit: 100 vials	1/19/89
Abbott Laboratories	Cannabinoids—GS Control X, Y, Z; No. 3897X, Y, Z	Vial: 5ml	1/19/89
Abbott Laboratories	Cannabinoids Bulk Calibrators B–F, No. 9671 (B02–F02)	Carboy: 50L, 45.5L, 20L, 19L, 13.25L, 13L, 10L, 9.5L, 9L Flask: 6L, 4L, 2L, 1L, 250ml, 200ml.	10/24/86
Abbott Laboratories	Cannabinoids Bulk Controls L, M, H; No. 9671 (L11, M11H11)	Carboy: 50L, 45.5L, 20L, 19L, 13.25L, 13L, 10L, 9.5L, 9L Flask: 6L, 4L, 2L, 1L, 250ml, 200ml.	10/24/86
Abbott Laboratories	Cannabinoids Bulk Master Calibrator W	Carboys: 50, 45, 20, 10L; Flasks: 6, 4, 2, 1L; 500, 250, 200, 125, 100, 50ml.	5/10/95
Abbott Laboratories	Cannabinoids Bulk Tracer (No. 94192)	Carboy: 50L, 45.5L, 20L, 19L, 13.25L, 13L, 10L, 9.5L, 9L Flask: 6L, 4L, 2L, 1L, 250ml, 200ml.	10/27/86
Abbott Laboratories	Cannabinoids Bulk Tracer; Code 3B28T	Sizes: 50, 45, 20, 10, 8, 6, 4, 2, 1L; 500, 250, 200, 125, 100, 50, 35, 30, 20, 15, 10, 5ml; Ampules: 50, 20, 15, 10, 5, 2ml.	6/02/94
Abbott Laboratories	Cannabinoids QC Primary 2–6 QT, NG, CO, PS No. 9671–11 2–6 QT–QC & NG/CO/PS–QC.	Carboy: 20, 10L; Flask: 6, 4, 2, 1L, 500, 250, 200, 100ml; Bottle: 950, 500, 100, 50, 5ml; Ampule: 20, 10, 5, 2ml.	2/20/91
Abbott Laboratories	Cannabinoids QC Primary 8QT No. 9671–11 8QT–QC	Carboy: 20, 10L; Flask: 6, 4, 2, 1L, 500, 250, 200, 100ml; Bottle: 950, 500, 100, 50, 5ml; Ampule: 20, 10, 5, 2ml.	10/25/91
Abbott Laboratories	Cannabinoids QC Primary NBS, B–F, L, M, H; No. 9671–02[NBS, B–F]–QC; No. 9671–11[L, M, H]–QC.	Carboy: 10L, Flask: 4L, 2L, 500ml, 250ml, 100ml, 200ml, Bottle: 5ml.	12/27/88
Abbott Laboratories	Cannabinoids QC Primary NBS, B–F, L, M, H; No. 9671 (NBS, B–F, L, M, H)–QC.	Carboy: 10L, Flask: 4L, 2L, 1L, 500ml, 250ml, 200ml, 100ml, Bottle: 5ml.	12/27/88
Abbott Laboratories	Cannabinoids Stock Standard (94568)	Bottle: 125 ml	6/19/87
Abbott Laboratories	Cannabinoids Stock Standard (No. 94193)	Bottle: 125 ml	10/24/86
Abbott Laboratories	Cannabinoids Stock Standard 10mcg/ml–No. 94568, 5mcg/ml–NO. 94568A, 1mcg/ml–No. 94568B.	Carboy: 20L, 10L, Flask: 4L, 2L, 1L, 500ml, 250ml, 200ml, 100ml, bottle: 950ml, 500ml, 100ml, 5ml.	12/27/89
Abbott Laboratories	Cannabinoids Stock Standard; 10mcg/ml–No. 94193, 5mcg/ml–No. 94193A, 1mcg/ml–No. 94193B.	Carboy: 20L, 10L, Flask: 4L, 2L, 1L, 500ml, 250ml, 200ml, 100ml, bottle: 950ml, 500ml, 100ml, 5ml.	12/27/88
Abbott Laboratories	Cannabinoids Stock Tracer (No. 94194)	Flasks: 6L, 4L, 2L, 1L, 500ml, 250ml, 200ml, 100ml; Bottles: 950ml, 500ml, 100ml, 50ml, 30ml, 5ml; Amp: 20, 10, 5, 2ml.	10/27/86
Abbott Laboratories	Cannabinoids—GS Bulk Calibrators B–F No. 3897 B–F	20 L, 10 L Carboy; 6 L, 2 L, 1 L, 250 ml, 200 ml Flask.	7/28/88
Abbott Laboratories	Cannabinoids—GS Bulk Controls (L, M, H) Code No. 3897 (L, M, H).	20 L, 10 L Carboy; 6 L, 2 L, 1 L, 250 ml, 200 ml Flask.	7/28/88
Abbott Laboratories	Cannabinoids—GS Bulk Tracer Code No. 95826	10 L Carboy; 6 L, 2 L Flask	7/28/88
Abbott Laboratories	Cannabinoids—GS Calibrators B–F No. 3897 B–F	5 ml Vial	7/28/88
Abbott Laboratories	Cannabinoids—GS Calibrators No. 3897–01	Kit: 6 Vials	7/28/88
Abbott Laboratories	Cannabinoids—GS Controls (L, M, H) No. 3897–L, M, H	5 ml Vial	7/28/88

EXEMPT CHEMICAL PREPARATIONS—Continued

Supplier	Product name	Form	Date
Abbott Laboratories	Cannabinoids—GS Controls No. 3897–10	Kit: 3 Vials	7/28/88
Abbott Laboratories	Cannabinoids—GS QC Primary NBS, B–F, L, M, H; No. 3897 (NBS, B–F, L, M, H)–QC.	Carboy: 10L, Flask: 4L, 2L, 1L, 500ml, 250ml, 200ml, 100ml, Bottle: 5ml.	12/27/88
Abbott Laboratories	Cannabinoids—GS Reagent Pack 100 Test No. 3897–20	Kit: 100 Tests	7/28/88
Abbott Laboratories	Cannabinoids—GS Reagent Pack 100 Test, No. 3897–19	Kit: 100 Tests	9/22/89
Abbott Laboratories	Cannabinoids—GS Tracer Code No. 3897–T	5 ml Vial	7/28/88
Abbott Laboratories	Cholylglycine Antiserum (Rabbit) Reagent Solution No. 7817	Plastic Bottle: 20ml	4/07/78
Abbott Laboratories	Cocaine Metabolite Bulk Calibrator B–F No. 9670 B–F	Carboy: 9.5, 19 L	7/07/88
Abbott Laboratories	Cocaine Metabolite Bulk Calibrator, B–F No. 9670	Carboy: 20L, 10L; Flask: 6L, 4L, 2L, 1L, 250ml, 200ml.	10/28/85
Abbott Laboratories	Cocaine Metabolite Bulk Controls L, H No. 9670–L, H	Carboy: 9.5, 19 L	7/07/88
Abbott Laboratories	Cocaine Metabolite Bulk Controls, L and H No. 9670	Carboy: 20L, 10L, Flask: 6L, 4L, 2L, 1L, 250ml, 200ml.	10/28/85
Abbott Laboratories	Cocaine Metabolite Bulk Controls, No. 9670X, Y, Z	Carboy: 20L, 10L, Flask: 6L, 2L, 1L, 250ml, 200ml.	1/19/89
Abbott Laboratories	Cocaine Metabolite Bulk Master Calibrator W	Carboys: 50, 45, 20, 10L; Flasks: 6, 4, 2, 1L; 500, 250, 200, 125, 100, 50ml.	5/10/95
Abbott Laboratories	Cocaine Metabolite Bulk Tracer, No. 97075	Carboy: 50L, 45.5L, 20L, 13.25L, 13L, 10L, 9L; Flask: 6L, 4L, 2L, 1L, 250ml, 200ml.	10/30/85
Abbott Laboratories	Cocaine Metabolite Control X, Y, Z; No. 9670X, Y, Z	Vial: 5ml	1/19/89
Abbott Laboratories	Cocaine Metabolite QC Primary 2–6 QT, NG, CO, PS No. 9670 2–6 QT–QC & NG/CO/PS–QC.	Carboy: 20, 10L; Flask: 6, 4, 2, 1L, 500, 250, 200, 100ml; Bottle: 950, 500, 100, 50, 5ml; Ampule: 20, 10, 5, 2ml.	2/20/91
Abbott Laboratories	Cocaine Metabolite QC Primary 2–6 QT–C, 8QT–C No. 9670 2–6 QTC–QC, 9670 8QTC–QC.	Carboy: 20, 10L; Flask: 6, 4, 2, 1L, 500, 250, 200, 100ml; Bottle: 950, 500, 100, 50, 5ml; Ampule: 20, 10, 5, 2ml.	10/28/91
Abbott Laboratories	Cocaine Metabolite QC Primary 8QT No. 9670 8QT–QC	Carboy: 20, 10L; Flask: 6, 4, 2, 1L, 500, 250, 200, 100ml; Bottle: 950, 500, 100, 50, 5ml; Ampule: 20, 10, 5, 2ml.	10/25/91
Abbott Laboratories	Cocaine Metabolite QC Primary B–F, L, M. H, No. 9670 (B–F, L, M, H)–QC.	Carboy: 10L; Flask: 4L, 2L, 1L, 500 ml, 250 ml, 200 ml, 100 ml, Bottle: 5 ml.	11/23/88
Abbott Laboratories	Cocaine Metabolite QC Primary Bulk Control M, No. 9670–M	Flasks: 1 liter, 250 ml, and 200 ml.	11/10/87
Abbott Laboratories	Cocaine Metabolite QC Primary Standard Control M, No. 9670–M.	Bottle: 5 ml	11/10/87
Abbott Laboratories	Cocaine Metabolite QC Primary X, No. 9670X–QC; Primary Z, No. 9670Z–QC.	Carboy: 10L; Flask: 4L, 2L, 1L, 500ml, 250ml, 200ml, 100ml; Bottle: 5ml.	6/05/89
Abbott Laboratories	Cocaine Metabolite Stock Tracer, No. 97156	Flasks: 6L, 4L, 2L, 1L, 500ml, 250ml, 200ml, 100ml; Bottles: 950ml, 500ml, 100ml, 50ml, 30ml, 5ml; Amp: 20, 10, 5, 2ml.	10/30/85
Abbott Laboratories	Codeine Metabolite Bulk Tracer; Code 3B48T	Sizes: 50, 45, 20, 10, 8, 6, 4, 2, 1L; 500, 250, 200, 125, 100, 50, 35, 30, 20, 15, 10, 5ml; Ampules: 50, 20, 15, 10, 5, 2ml.	6/02/94
Abbott Laboratories	High Multiconstituent (9) Stock Standard Cat. No. 92622	Carboy: 50, 20, 10L; Flask: 6, 4, 2, 1L, 500, 250, 200, 100ml; Bottle: 950, 500, 100, 50, 5ml; Ampule: 20, 10, 5, 2ml.	7/02/91
Abbott Laboratories	Low Multiconstituent (9) Stock Standard Cat. No. 92620	Carboy: 50, 20, 10L; Flask: 6, 4, 2, 1L, 500, 250, 200, 100ml; Bottle: 950, 500, 100, 50, 5ml; Ampule: 20, 10, 5, 2ml.	7/02/91
Abbott Laboratories	Low, Medium, High Multiconstituent Stock Standards, No. 90967, 90968, 90969.	Carboy: 10, 20L; Flask: 6, 4, 2, 1L, 500, 250, 200, 100ml; Bottle: 950, 500, 100, 50, 5ml; Ampule: 20, 10, 5, 2ml.	10/06/89

EXEMPT CHEMICAL PREPARATIONS—Continued

Supplier	Product name	Form	Date
Abbott Laboratories	Medium Multiconstituent (9) Stock Standard Cat. No. 92621	Carboy: 50, 20, 10L; Flask: 6, 4, 2, 1L, 500, 250, 200, 100ml; Bottle: 950, 500, 100, 50, 5ml; Ampule: 20, 10, 5, 2ml.	7/02/91
Abbott Laboratories	Methadone Bulk Calibrators (B–F) Code No. 9676 (B–F)	20 L, 10 L Carboy; 6 L, 2 L, 1 L, 250 ml, 200 ml Flask.	9/02/88
Abbott Laboratories	Methadone Bulk Calibrators (L, M, H) Code No. 9676 (L, M, H).	20 L, 10 L Carboy; 6 L, 2 L, 1 L, 250 ml, 200 ml Flask.	9/02/88
Abbott Laboratories	Methadone Bulk Master Calibrator W, 3B31–W	Carboys: 50, 45, 20, 10L; Flasks: 6, 4, 2, 1L; 500, 250, 200, 125, 100, 50ml.	6/12/95
Abbott Laboratories	Methadone Bulk Stock Standard Code No. 95952	10 L Carboy; 6 L, 2 L, 1 L Flask.	9/02/88
Abbott Laboratories	Methadone Calibrators B–F No. 9676 B–F	5 ml Vial	9/02/88
Abbott Laboratories	Methadone Controls L, M, H No. 9676–L, M, H	5 ml Vial	9/02/88
Abbott Laboratories	Methadone Controls No. 9676–10	Kit: 3 Vials	9/02/88
Abbott Laboratories	Methadone QC Primary NG, CO, PS No. 9676 NG/CO/PS–QC.	Carboy: 20, 10L; Flask: 6, 4, 2, 1L, 500, 250, 200, 100ml; Bottle: 950, 500, 100, 50, 5ml; Ampule: 20, 10, 5, 2ml.	2/20/91
Abbott Laboratories	Methadone Stock Standard Code No. 95720	1 L, 500 ml, 100 ml Bottle	9/02/88
Abbott Laboratories	Morphine Stock Standard, No. 97291	Vial: 125ml	10/16/85
Abbott Laboratories	Morphine Stock Standard, No. 97291 A–B	Carboy: 20L, 10L Flask: 4L, 2L, 1L, 500 ml, 250 ml, 200 ml, 100 ml Bottle: 950ml, 500ml, 100ml, 5ml.	11/22/88
Abbott Laboratories	Multiconstituent (9) QC Control H Cat. No. 92625	Carboy: 50, 20, 10L; Flask: 6, 4, 2, 1L, 500, 250, 200, 100ml; Bottle: 950, 500, 100, 50, 5ml; Ampule: 20, 10, 5, 2ml.	7/02/91
Abbott Laboratories	Multiconstituent (9) QC Control L Cat. No. 92623	Carboy: 50, 20, 10L; Flask: 6, 4, 2, 1L, 500, 250, 200, 100ml; Bottle: 950, 500, 100, 50, 5ml; Ampule: 20, 10, 5, 2ml.	7/02/91
Abbott Laboratories	Multiconstituent (9) QC Control M Cat. No. 92624	Carboy: 50, 20, 10L; Flask: 6, 4, 2, 1L, 500, 250, 200, 100ml; Bottle: 950, 500, 100, 50, 5ml; Ampule: 20, 10, 5, 2ml.	7/02/91
Abbott Laboratories	Multiconstituent Bulk Controls L, M, H (No. 9687–L, M, H)	Carboy: 20L, 10L, Flask: 10L, 6L, 4L, 2L, 1L, 250ml, 200ml.	9/03/87
Abbott Laboratories	Multiconstituent Control for Abused Drug Assays Bulk L, M, H; No. 9687–L, M, H.	Carboy: 20L, 10L, 19L, 9.5L, 6L, 4L, 1L, Flask: 250ml, 200ml.	10/06/89
Abbott Laboratories	Multiconstituent Control for Abused Drug Assays L, M, H; No. 9687–L, M, H.	Vial: 5 ml	10/06/89
Abbott Laboratories	Multiconstituent Control for Abused Drug Assays QC Primaries L, M, H; No. 9687–L, H, H–QC.	Carboy: 10L, Flask: 4L, 2L, 1L, 500ml, 250ml, 200ml, 100ml, Bottle: 950ml, 500ml, 100ml, 5ml.	10/06/89
Abbott Laboratories	Nordiazepam Serum Bulk Stock Standard No. 94941	Carboy: 10 liters; Flask: 6 liters, 2 liters, 1 liter.	5/02/88
Abbott Laboratories	Nordiazepam Serum Bulk Stock Standard: Code No. 94941	Carboy: 10 liter; Flask: 6 liter, 2 liter.	12/07/87
Abbott Laboratories	Nordiazepam Serum Stock Standard No. 94941, 94941 A, B	Carboy: 20L, 10L Flask: 4L, 2L, 1L, 500 ml, 250 ml, 200 ml, 100 ml Bottle: 950 ml, 500 ml, 100 ml, 5 ml.	11/22/88
Abbott Laboratories	Nordiazepam Serum Stock Standard: Code No. 94941	Bottle: 125 ml	12/07/87
Abbott Laboratories	Nordiazepam Serum Stock Standard: No. 94941	Bottle: 125 ml	5/02/88
Abbott Laboratories	Nordiazepam Stock Standard No. 97757, 97757 A, B	Carboy: 20L, 10L Flask: 4L, 2L, 1L, 500 ml, 250 ml, 200 ml, 100 ml Bottle: 950ml, 500ml, 100ml, 5ml.	11/22/88
Abbott Laboratories	Nordiazepam Stock Standard, No. 97757	Bottle: 125ml	4/21/86
Abbott Laboratories	Opiate Bulk Calibrators, B–F, No. 9673 B–F	Carboy: 50L, 45.5L, 20L, 19L, 13.25L, 13L, 10L, 9.5L, 9L Flask: 6L, 4L, 2L, 1L, 250ml, 200ml.	5/07/86

EXEMPT CHEMICAL PREPARATIONS—Continued

Supplier	Product name	Form	Date
Abbott Laboratories	Opiate Bulk Controls, L and H No. 9673 L and H	Carboy: 50L, 45.5L, 20L, 19L, 13.25L, 13L, 10L, 9.5L, 9L Flask: 6L, 4L, 2L, 1L, 250ml, 200ml.	5/07/86
Abbott Laboratories	Opiates Bulk Controls, No. 9673X, Y, Z	Carboy: 20L, 10L, Flask: 6L, 2L, 1L, 250ml, 200ml.	1/19/89
Abbott Laboratories	Opiates Bulk Master Calibrator W	Carboys: 50, 45, 20, 10L; Flasks: 6, 4, 2, 1L; 500, 250, 200, 125, 100, 50ml.	5/10/95
Abbott Laboratories	Opiates Bulk Tracer, No. 97458	Carboy: 50L, 45.5L, 20L, 19L, 13.25L, 13L, 10L, 9.5L, 9L Flask: 6L, 4L, 2L, 1L, 250ml, 200ml.	5/07/86
Abbott Laboratories	Opiates Bulk Tracer; Code # 3B25T	Sizes: 50, 45, 20, 10, 8, 6, 4, 2, 1L; 500, 250, 200, 125, 100, 50, 35, 30, 20, 15, 10, 5ml; Ampules: 50, 20, 15, 10, 5, 2ml.	6/02/94
Abbott Laboratories	Opiates Control X, Y, Z; No. 9673X, Y, Z	Vial: 5ml	1/19/89
Abbott Laboratories	Opiates QC Primary (B–F, L, M, H) QC No. 9673 (B–F, L, M, H) QC.	Carboy: 10L Flask: 4L, 2L, 1L, 500 ml, 250 ml, 200 ml, 100 ml Bottle: 5ml.	11/22/88
Abbott Laboratories	Opiates QC Primary 2–6 QT, NG, CO, PS No. 9673 2–6 QT–QC & NG/CO/PS–QC.	Carboy: 20, 10L; Flask: 6, 4, 2, 1L, 500, 250, 200, 100ml; Bottle: 950, 500, 100, 50, 5ml; Ampule: 20, 10, 5, 2ml.	2/20/91
Abbott Laboratories	Opiates QC Primary 8QT No. 9673 8QT–QC	Carboy: 20, 10L; Flask: 6, 4, 2, 1L, 500, 250, 200, 100ml; Bottle: 950, 500, 100, 50, 5ml; Ampule: 20, 10, 5, 2ml.	10/25/91
Abbott Laboratories	Opiates QC Primary Bulk Control M, No. 9673–M	Flasks: 1 liter, 250 ml, and 200 ml.	11/10/87
Abbott Laboratories	Opiates QC Primary Standard Control M, No. 9673–M	Bottle: 5 ml	11/10/87
Abbott Laboratories	Opiates QC Primary X, No. 9673X–QC; Primary Y, No. 9673Y–QC; PrimaryZ, No. 9673Z–QC.	Carboy: 10L, Flask: 4L, 2L, 1L, 500ml, 250ml, 200ml, 100ml, Bottle: 5ml.	6/05/89
Abbott Laboratories	Opiates Stock Tracer, No. 98718	Flasks: 6L, 4L, 2L, 1L, 500ml, 250ml, 200ml, 100ml; Bottles: 950ml, 500ml, 100ml, 50ml, 30ml, 5ml; Amp: 20, 10, 5, 2ml.	5/07/86
Abbott Laboratories	Phencyclidine Bulk Calibrator, B–F No. 9672 B–F	Carboy: 50L, 45.5L, 20L, 13.25L, 13L, 10L, 9L Flask: 6L, 4L, 2L, 1L, 250ml, 200ml.	3/21/86
Abbott Laboratories	Phencyclidine Bulk Control M, No. 9672 M	Carboy: 50L, 45.5L, 20L, 13.25L, 13L, 10L, 9L Flask: 6L, 4L, 2L, 1L, 250ml, 200ml.	9/26/86
Abbott Laboratories	Phencyclidine Bulk Controls, L and H No. 9672 L and H	Carboy: 50L, 45.5L, 20L, 13.25L, 13L, 10L, 9L Flask: 6L, 4L, 2L, 1L, 250ml, 200ml.	3/21/86
Abbott Laboratories	Phencyclidine Bulk Controls, No. 9672X, Y, Z	Carboy: 20L, 10L, Flask: 6L, 2L, 1L, 250ml, 200ml.	1/19/89
Abbott Laboratories	Phencyclidine Bulk Master Calibrator W, 3B26–W	Carboys: 50, 45, 20, 10L; Flasks: 6, 4, 2, 1L; 500, 250, 200, 125, 100, 50ml.	6/12/95
Abbott Laboratories	Phencyclidine Control X, Y, Z; No. 9672X, Y, Z	Vial: 5ml	1/19/89
Abbott Laboratories	Phencyclidine QC Primary (B–F, L, M, H) QC No. 9672 (B–F, L, M, H) QC.	Carboy: 10L Flask: 4L, 2L, 1L, 500 ml, 250 ml, 200 ml, 100 ml Bottle: 5ml.	11/22/88
Abbott Laboratories	Phencyclidine QC Primary 2–6 QT NG, CO, PS No. 9672 2–6 QT–QC & NG/CO/PS–QC.	Carboy: 20, 10L; Flask: 6, 4, 2, 1L, 500, 250, 200, 100ml; Bottle: 950, 500, 100, 50, 5ml; Ampule: 20, 10, 5, 2ml.	2/20/91
Abbott Laboratories	Phencyclidine QC Primary 8QT No. 9672 8QT–QC	Carboy: 20, 10L; Flask: 6, 4, 2, 1L, 500, 250, 200, 100ml; Bottle: 950, 500, 100, 50, 5ml; Ampule: 20, 10, 5, 2ml.	10/25/91
Abbott Laboratories	Phencyclidine QC Primary X, No. 9672X–QC; Primary Z, No. 9672Z–QC.	Carboy: 10L, Flask: 4L, 2L, 1L, 500ml, 250ml, 200ml, 100ml, Bottle: 5ml.	6/05/89

EXEMPT CHEMICAL PREPARATIONS—Continued

Supplier	Product name	Form	Date
Abbott Laboratories	Phencyclidine Stock Standard No. 97158, 97158 A–B	Carboy: 20L, 10L Flask: 4L, 2L, 1L, 500 ml, 250 ml, 200 ml, 100 ml Bottle: 950ml, 500ml, 100ml, 5ml.	11/22/88
Abbott Laboratories	Phencyclidine Stock Standard, No. 95356	Flask: 100ml, 200ml, 250ml, 500ml, 1L, 2L, 4L, Bottle: 5ml, 100ml, 500ml, 950 ml, Carboys: 10L, 20L.	4/18/89
Abbott Laboratories	Phencyclidine Stock Standard, No. 97158	Bottle: 125ml	11/21/85
Abbott Laboratories	Phenobarbital Bulk Calibrators No. 9500 B–F	Carboy: 50L, 45.5L, 19L, 13.25L, 13L, 9.5L, 9L; Flask: 6L, 4L, 2L, 1L, 250ml, 200ml.	6/16/88
Abbott Laboratories	Phenobarbital Bulk Controls No. 9500 L, M, H	Carboy: 50L, 45.5L, 19L, 13.25L, 13L, 9.5L, 9L; Flask: 6L, 4L, 2L, 1L, 250ml, 200ml.	6/16/88
Abbott Laboratories	Phenobarbital Control L, Code # 7A70-L	Vial: 10ml	1/25/94
Abbott Laboratories	Phenobarbital Enzyme Inhibitor Stock	Vial: 2ml	1/20/84
Abbott Laboratories	Phenobarbital QC Primary B–F, L, M, H Item No. 9500B–F, L, M, H.	Carboy: 20, 10L; Flask: 6, 4, 2, 1L, 500, 250, 200, 100ml; Bottles: 950, 500, 100, 50, 5ml; Ampules: 20, 10, 5, 2ml.	1/04/91
Abbott Laboratories	Phenobarbital Stock Solution 1 mg/ml Code No. 94312	Plastic Bottle: 125 ml	3/23/87
Abbott Laboratories	Phenobarbital Stock Solution 10 mg/ml Code No. 94313	Plastic Bottle: 125 ml	3/23/87
Abbott Laboratories	Phenobarbital Stock Standard 500 ug/ml Item No. 99259	Carboy: 50, 20, 10L; Flask: 6, 4, 2, 1L, 500, 250, 200, 100ml; Bottles: 950, 500, 100, 50, 5ml; Ampules: 20, 10, 5, 2ml.	1/04/91
Abbott Laboratories	Phenobarbital Stock Standard Solution	Bottle: 1 liter	8/12/82
Abbott Laboratories	Polyethylene Glycol 8000, 16% Solution in 0.09 M Barbital Buffer, No. 7541.	Plastic Bottle: 300 ml, 150 ml	9/21/77
Abbott Laboratories	Polyethylene Glycol 8000, 18% Solution in 0.09M Barbital Buffer: No. 07602.	Stainless Steel Tank: 1000 liters.	3/09/88
Abbott Laboratories	Progesterone Buffer No. 2242J	Bottle: 30ml	3/11/92
Abbott Laboratories	Progesterone Buffer No. 2242J0001	Box: 100 Bottles/30ml	3/11/92
Abbott Laboratories	Progesterone Bulk Buffer No. 12918	Carboy: 50L, 25L, 20L, 19L, 15L, 13L, 10L, 9L; Bottle: 950ml, 500ml, 100ml, 50ml, 30ml, 20ml; Amp: 20ml, 10ml, 5ml, 2ml.	5/11/92
Abbott Laboratories	Progesterone Reagent Pack No. 2242–20	Kit: 4 Bottles	3/11/92
Abbott Laboratories	Propoxyphene Bulk Calibrator B–F No. 9675 B–F	Carboys or Flasks: 50L, 45.5L, 20L, 19L, 13.25L, 13L, 10L, 9.5L, 9L, 6L, 4L, 2L, 1L, 250ml, 200ml.	11/30/90
Abbott Laboratories	Propoxyphene Bulk Control L, M, H No. 9675 L, M, H	Carboys or Flasks: 50L, 45.5L, 20L, 19L, 13.25L, 13L, 10L, 9.5L, 9L, 6L, 4L, 2L, 1L, 250ml, 200ml.	11/30/90
Abbott Laboratories	Propoxyphene Bulk Tracer Item No. 92003	Carboys or Flasks: 50L, 45.5L, 20L, 19L, 13.25L, 13L, 10L, 9.5L, 9L, 6L, 4L, 2L, 1L, 250ml, 200ml.	11/30/90
Abbott Laboratories	Propoxyphene Calibrators Item No. 9675–01	Kit: 5 vials	11/30/90
Abbott Laboratories	Propoxyphene Calibrators Item No. 9675B–F	Vial: 5ml	11/30/90
Abbott Laboratories	Propoxyphene Controls Item No. 9675–10	Kit: 3 vials	11/30/90
Abbott Laboratories	Propoxyphene Controls Item No. 9675L, M, H	Vial: 5ml	11/30/90
Abbott Laboratories	Propoxyphene QC Primary B–F, L, M, H, Z Item No. 9675(B–F, L, M, H, Z)–QC.	Carboy: 20, 10L Flasks: 6, 4, 2, 1L, 500, 250, 200, 100ml Bottles: 950, 500, 100, 50, 5ml Ampules: 20, 10, 5, 2ml.	11/30/90
Abbott Laboratories	Propoxyphene QC Primary NG, CO, PS No. 9675 NG/CO/PS–QC.	Carboy: 20, 10L; Flask: 6, 4, 2, 1L, 500, 250, 200, 100ml; Bottle: 950ml, 500, 100, 50, 5ml; Ampule: 20, 10, 5, 2ml.	2/20/91
Abbott Laboratories	Propoxyphene Stock Standard, 100 mcg/ml Item No. 92005	Carboys: 20, 10L Flasks: 6, 4, 2, 1L, 500, 250, 200, 100ml Bottles: 950, 500, 100, 50, 5ml Ampules: 20, 10, 5, 2ml.	11/30/90
Abbott Laboratories	Propoxyphene Stock Tracer Item No. 92001	Bottle: 12ml	11/30/90
Abbott Laboratories	Propoxyphene Tracer Item No. 9675–T	Bottles: 3.2ml, 5ml	11/30/90

EXEMPT CHEMICAL PREPARATIONS—Continued

Supplier	Product name	Form	Date
Abbott Laboratories	Secobarbital Bulk Calibrator, B–F No. 9669	Carboy: 20L, 10L, Flask: 6L, 4L, 2L, 1L, 250ml, 200ml.	3/21/86
Abbott Laboratories	Secobarbital Bulk Controls, L and H No. 9669	Carboy: 20L, 10L, Flask: 6L, 4L, 2L, 1L, 250ml, 200ml.	3/21/86
Abbott Laboratories	Secobarbital Stock Standard 1000mcg/ml-No. 90107, 500mcg/ml-No. 90107A, 200mcg/ml-No. 90107B.	Carboy: 20L, 10L, Flask: 4L, 2L, 1L, 500ml, 250ml, 200ml, 100ml, Bottle: 950ml, 500ml, 100ml, 5ml.	1/03/89
Abbott Laboratories	Secobarbital Stock Standard No. 97171, 97171 A, B	Carboy: 20L, 10L Flask: 4L, 2L, 1L, 500 ml, 250 ml, 200 ml, 100 ml Bottle: 950 ml, 500 ml, 100 ml, 5 ml.	11/22/88
Abbott Laboratories	Secobarbital Stock Standard, No. 97171	Bottle: 125ml	11/21/85
Abbott Laboratories	Spectrum Phenobarbital Calibrator II–VI, Nos. 9755, 9757, 9759, 9761, 9763.	Bottle: 4ml	10/03/85
Abbott Laboratories	Spectrum Phenobarbital Control, Nos. 9876, 9878, 9880. (L, M, H).	Bottle: 4ml	10/03/85
Abbott Laboratories	TDx Amphetamine Class Calibrators 9667–01	Kit containing 6 vials	3/01/88
Abbott Laboratories	TDx Amphetamine Class Calibrators B–F	Bottle: 5 ml	3/01/88
Abbott Laboratories	TDx Amphetamine Class Control L and H	Bottle: 5 ml	3/01/88
Abbott Laboratories	TDx Amphetamine Class Controls 9667–10	Kit containing 2 vials	3/01/88
Abbott Laboratories	TDx Amphetamine Class Reagent Pack, No. 9667–60	Kit containing 1 vial	3/01/88
Abbott Laboratories	TDx Amphetamine Class Tracer Solution, No. 9667T	Bottle: 5 ml	3/01/88
Abbott Laboratories	TDx Amphetamine/Methamphetamine Calibrator, No. 9668–01	Bottles: 4ml	8/23/85
Abbott Laboratories	TDx Amphetamine/Methamphetamine Controls, No. 9668–10	Bottles: 4ml	8/23/85
Abbott Laboratories	TDx Barbiturates Calibrators No. 9669 B–F	5 ml Vial	7/01/88
Abbott Laboratories	TDx Barbiturates Calibrators No. 9669–01	Kit: 5 Vials, 5 ml each	7/01/88
Abbott Laboratories	TDx Barbiturates Calibrators, B–F No. 9669	Bottle: 4 ml	10/08/85
Abbott Laboratories	TDx Barbiturates Control L, H No. 9669 L, H	5 ml Vial	7/01/88
Abbott Laboratories	TDx Barbiturates Control, L and H No. 9669	Bottle: 4ml	10/08/85
Abbott Laboratories	TDx Barbiturates Controls No. 9669–10	Kit: 2 Vials, 5 ml each	7/01/88
Abbott Laboratories	TDx Benzodiazepines Calibrator No. 9674 B–F	5 ml Vial	7/18/88
Abbott Laboratories	TDx Benzodiazepines Calibrators, No. 9674–01	Bottles: 4ml	4/21/86
Abbott Laboratories	TDx Benzodiazepines Controls L, H No. 9674 L, H	5 ml Vial	7/18/88
Abbott Laboratories	TDx Benzodiazepines Controls L, H No. 9674–10	Kit: 2 Vials, 5 ml each	7/18/88
Abbott Laboratories	TDx Benzodiazepines Controls, No. 9674–10	Bottles: 4ml	4/21/86
Abbott Laboratories	TDx Benzodiazepines Serum Calibrator No. 9682 B–F	Bottle: 4 ml	5/02/88
Abbott Laboratories	TDx Benzodiazepines Serum Calibrators B–F: Code No. 9682 B–F.	Bottle: 4ml, 5ml	12/07/88
Abbott Laboratories	TDx Benzodiazepines Serum Calibrators: Code No. 9682–01	Kit	12/07/88
Abbott Laboratories	TDx Benzodiazepines Serum Calibrators: No. 9682–01	Kit containing 6 vials	5/02/88
Abbott Laboratories	TDx Benzodiazepines Serum Controls L, M, & H: No. 9682 L, M, H.	Bottle: 4 ml	12/07/87
Abbott Laboratories	TDx Benzodiazepines Serum Controls L, M, H: No. 9682 L, M, H.	Bottle: 4 ml	5/02/88
Abbott Laboratories	TDx Benzodiazepines Serum Controls: Code No. 9682–10	Kit	12/07/88
Abbott Laboratories	TDx Benzodiazepines Serum Controls: No. 9682–10	Kit containing 3 vials	5/02/88
Abbott Laboratories	TDx Cannabinoids Calibrators B–F (No. 9671–01)	Bottles: 5 ml	10/24/86
Abbott Laboratories	TDx Cannabinoids Controls L, M, and H (9671–11)	Bottle: 5 ml	6/19/87
Abbott Laboratories	TDx Cannabinoids Controls L, M, H (No. 9671–10)	Bottles: 5 ml	10/24/86
Abbott Laboratories	TDx Cannabinoids Fluorescein Tracer Solution (No. 9671–T)	Bottle: 5 ml	10/27/86
Abbott Laboratories	TDx Cannabinoids Reagent Pack (No. 9671–20)	100 tests	10/27/86
Abbott Laboratories	TDx Cocaine Metabolite Calibrator B–F No. 9670 B–F	5 ml Vial	7/07/88
Abbott Laboratories	TDx Cocaine Metabolite Calibrator, B–F No. 9670	Bottle: 4ml	10/02/85
Abbott Laboratories	TDx Cocaine Metabolite Control L, H No. 9670 L, H	5 ml Vial	7/07/88
Abbott Laboratories	TDx Cocaine Metabolite Control, L and H No. 9669	Bottle: 4ml	10/02/85
Abbott Laboratories	TDx Cocaine Metabolite Controls No. 9670–10	Kit: 2 Vials, 5 ml each	7/07/88
Abbott Laboratories	TDx Cocaine Metabolite Fluorescein Tracer Solution No. 9670 T0001.	Kit: 100 Vials, 5 ml Each	7/07/88
Abbott Laboratories	TDx Cocaine Metabolite Fluorescein Tracer Solution No. 9670–T.	Box: 5 ml Vial	7/07/88
Abbott Laboratories	TDx Cocaine Metabolite Reagent Pack	Reagent well: 5ml	10/02/85
Abbott Laboratories	TDx Cocaine Metabolite Reagent Pack No. 9670–20	Kit: 100 Tests	7/07/88
Abbott Laboratories	TDx Multiconstituent Controls L, M, H (No. 9687–L, M, H)	Bottle: 5 ml	9/03/87
Abbott Laboratories	TDx Opiates Calibrators B–F: No. 9673–01	Kit: 6 Vials	2/29/88
Abbott Laboratories	TDx Opiates Calibrators, B–F No. 9673	5 ml Vial	5/07/86
Abbott Laboratories	TDx Opiates Controls L and H, No. 9673–10	Kit: 2 Vials	2/29/88
Abbott Laboratories	TDx Opiates Controls L and H: No. 9673 L, H	Vial: 5 ml	2/29/88
Abbott Laboratories	TDx Opiates Controls, L and H No. 9673	Vials: 5ml	5/07/86
Abbott Laboratories	TDx Opiates Fluorescein Tracer Solution No. 9673 T0001	Box: 10 Vials, 5 ml each	7/08/88
Abbott Laboratories	TDx Opiates Fluorescein Tracer Solution: No. 9673–T	Vial: 5 ml	2/29/88
Abbott Laboratories	TDx Opiates Reagent Pack No. 9673–20, 100 tests	Kit: 100 tests	5/07/86

EXEMPT CHEMICAL PREPARATIONS—Continued

Supplier	Product name	Form	Date
Abbott Laboratories	TDx Phencyclidine Bulk Calibrator B–F No. 9672 B–F	5 ml Vial	7/18/88
Abbott Laboratories	TDx Phencyclidine Bulk Calibrator B–F No. 9672 B–F	Carboy: 9.5, 19 L	7/18/88
Abbott Laboratories	TDx Phencyclidine Bulk Control L, M, H No. 9672 L, M, H	Carboy: 9.5, 19 L	7/18/88
Abbott Laboratories	TDx Phencyclidine Calibrators, B–F No. 9672	Bottle: 4ml	10/09/85
Abbott Laboratories	TDx Phencyclidine Control M No. 9672	Bottle: 4ml	9/26/86
Abbott Laboratories	TDx Phencyclidine Controls L, M, H No. 9672 L, M, H	5 ml Vial	7/18/88
Abbott Laboratories	TDx Phencyclidine Controls No. 9672–10	Kit: 3 Vials, 5 ml each	7/18/88
Abbott Laboratories	TDx Phencyclidine Controls, L and H No. 9672	Bottle: 4ml	10/09/85
Abbott Laboratories	TDx Phenobarbital Calibrator–0.0, 5.0, 10.0, 20.0, 40.0, and 80.0 mcg/ml.	Kit ctg: 6 vials	8/31/81
Abbott Laboratories	TDx Phenobarbital Calibrators B–F No. 9500 B–F	5 ml Vial	6/16/88
Abbott Laboratories	TDx Phenobarbital Calibrators No. 9500–01 (9500 B–F)	Kit: 6 Vials, 5 ml each	6/16/88
Abbott Laboratories	TDx Phenobarbital Controls No. 9500 L, M, H	5 ml Vial	6/16/88
Abbott Laboratories	TDx Phenobarbital Controls No. 9500–10 (9500 L, M, H)	Kit: 3 Vials, 5 ml each	6/16/88
Abbott Laboratories	TDx Phenobarbital Controls- 15.0, 30.0, 50.0 mcg/ml	Kit ctg: 3 vials	8/31/81
Abbott Laboratories	TDx Propoxyphene Reagent Pack Item No. 9675–20	Kit: 100 tests	11/30/90
Abbott Laboratories	TDx Systems Multiconstituent Controls for Abused Drug (No. 9687–10).	Kit: 6 Bottles	9/03/87
Abbott Laboratories	TDx or TDx/TDxFLx Propoxyphene Fluorescein Tracer Solution Item No. 9675T0001.	Box: 100 bottles or less	11/30/90
Abbott Laboratories	TDx, ADx Amphetamine Class Reagent Pack, No. 9667–20, No. 9667–55.	Kit: 100 tests	3/01/88
Abbott Laboratories	TDx/TDxFLx Propoxyphene Reagent Pack Item No. 9675–60	Kit: 100 tests	11/30/90
Abbott Laboratories	Thyroxine Binding Globulin, Thyroxine I 125	Glass Bottle: 13ml. Plastic Bottle: 250ml.	4/22/76
Abbott Laboratories	TrakPak Five Drug Control 2–6 QT Nos. 92212–92216	Carboy: 20, 10L Flask: 6, 4, 2, 1L, 500, 250, 200, 100ml Bottle: 950, 500, 100, 50, 5ml Ampule: 20, 10, 5, 2ml.	10/19/90
Abbott Laboratories	TrakPak Five Drug Control 8QT No. 93349	Carboy: 20, 10L; FlaskL: 6, 4, 2, 1L, 500, 250, 200, 100ml; Bottle: 950, 500, 100, 50, 5ml; Ampule: 20, 10, 5, 2ml.	10/25/91
Abbott Laboratories	TrakPak Five Drug Control Stock No. 92210	Carboy: 20, 10L Flask: 6, 4, 2, 1L, 500, 250, 200, 100ml Bottle: 950, 500, 100, 50, 5ml Ampule: 20, 10, 5, 2ml.	10/19/90
Abbott Laboratories	Trakpak Card w/Cover Code #01249	Box: 2000 cards w/cover	3/08/91
Abbott Laboratories	Trakpak Card w/Tracers Code #01248	Box: 2000 cards	3/08/91
Abbott Laboratories	Trakpak Cocaine Tracer Code #92199	Flasks: 6, 4, 2, 1L, 500, 250, 200, 100ml; Bottles: 950, 500, 100, 50, 5ml; Ampules: 20, 10, 5, 2ml.	3/08/91
Abbott Laboratories	Trakpak Drug of Abuse Screening System (40 test kit) Code #04A74.	Kit: 40 cartridges	3/08/91
Abbott Laboratories	Trakpak Negative Control Code #04A74C	Vial: 5ml	3/08/91
Abbott Laboratories	Trakpak Opiates Tracer Code #92198	Flasks: 6, 4, 2, 1L, 500, 250, 200, 100ml; Bottles: 950, 5, 00, 100, 50, 5ml; Ampules: 20, 10, 5, 2ml.	3/08/91
Abbott Laboratories	Trakpak Reaction Cartridge Code #04A74B	Cartridge: 1 card	3/08/91
Abbott Laboratories	Trakpak THC Tracer Code #92200	Flasks: 6, 4, 2, 1L, 500, 250, 200, 100ml; Bottles: 950, 500, 100, 50, 5ml; Ampules: 20, 10, 5, 2ml.	3/08/91
Abbott Laboratories	X Systems Amphetamine/Methamphetamine II Calibrator B, C, D, E, F; No. 01A99-B, C, D, E, F.	Vial: 5 ml	7/14/89
Abbott Laboratories	X Systems Amphetamine/Methamphetamine II Calibrators, No. 01A99-01.	Kit: 6 vials	7/14/89
Abbott Laboratories	X Systems Amphetamine/Methamphetamine II Control L, M, H; No. 01A99-L, M, H.	Vial: 5 ml	7/14/89
Abbott Laboratories	X Systems Amphetamine/Methamphetamine II Controls, No. 01A99-10.	Kit: 3 vials	7/14/89
Abbott Laboratories	X Systems Methadone Calibrators B–F	Bottle: 5ml	5/15/92
Abbott Laboratories	X Systems Methadone Calibrators B–F	Kit: 6 Bottles	5/12/92
Abbott Laboratories	X Systems Methadone Controls L, M, H, No. 9676–10	Kit: 3 Bottles	5/15/92
Abbott Laboratories	X Systems Methadone Controls L, M, H; No. 9676 L, M, H	Bottle: 5ml	5/15/92
Abbott Laboratories	XSYSTEMS Amphetamine/Methamphetamine II Calibrators No. 1A99–06.	Kit: 6 Vials	8/26/88
Abbott Laboratories	XSYSTEMS Barbiturates II U Calibrators , No. 9669–07	Kit: 6 vials	10/17/89
Abbott Laboratories	XSYSTEMS Benzodiazepines Calibrators, No. 9674–02	Kit: 5 Vials, 5 ml each	7/18/88
Abbott Laboratories	XSYSTEMS Cannabinoids Calibrators, No. 9671–04	Bottle: 5 ml	6/19/87

EXEMPT CHEMICAL PREPARATIONS—Continued

Supplier	Product name	Form	Date
Abbott Laboratories	XSYSTEMS Cocaine Metabolite Calibrators No. 9670–06	Kit: 5 Vials, 5 ml each	7/07/88
Abbott Laboratories	XSYSTEMS Methadone Calibrators No. 9676–02	Kit: 6 Vials	9/02/88
Abbott Laboratories	XSYSTEMS Multiconstituent Controls, No. 9687–12	Kit: 6 vials	10/06/89
Abbott Laboratories	XSYSTEMS Opiates Calibrators, No. 9673–06	Vial: 5 ml	2/29/88
Abbott Laboratories	XSYSTEMS Phencyclidine Calibrators, No. 9672–06	Kit: 5 Vials, 5 ml each	7/18/88
Abbott Laboratories	d-Amphetamine (II) Bulk Stock Standard Code No. 95947	10 L Carboy; 6 L, 2 L, 1 L Flask.	8/26/88
Abbott Laboratories	d-Amphetamine (II) Stock Standard Code No. 95934	1 L, 500 ml, 100 ml Bottle	8/26/88
Abbott Laboratories	d-Amphetamine (II) Stock Standard No. 95934, 95934 A–B	Carboy: 20L, 10L Flask: 4L, 2L, 1L, 500 ml, 250 ml, 200 ml, 100 ml Bottle: 950ml, 500ml, 100ml, 5ml.	11/22/88
Adri/Technam	3-Ortho-Carboxymethylmorphine	Screw Cap Vial	5/03/73
Adri/Technam	5-Ethyl-5-(1-Carboxy-n-propyl) Barbituric Acid	Screw Cap Vial	5/03/73
Adri/Technam	5-Ethyl-5-(1-Carboxy-n-propyl) Barbituric Acid-Bovine Serum Albumin.	Vaccine Vial: 10ml	5/03/73
Adri/Technam	5-Ethyl-5-(1-Carboxy-n-propyl) Barbituric Acid-Rabbit Serum Albumin.	Vaccine Vial: 10ml	5/03/73
Adri/Technam	Barbiturate Standard	Screw-cap vial: 10ml	7/17/76
Adri/Technam	Barbituric Acid Sensitized Red Blood Cells	Vaccine Vial: 50ml	5/03/73
Adri/Technam	Benzoyl Ecgonine	Screw-cap vial: 10ml	4/18/74
Adri/Technam	Benzoyl Ecgonine Sensitized Red Blood Cells	Vaccine Vial: 50ml	5/03/73
Adri/Technam	Benzoyl Ecgonine Standard	Screw-cap vial: 10ml	7/17/76
Adri/Technam	Benzoyl Ecgonine-BSA	Vaccine Vial	7/21/75
Adri/Technam	Benzoyl Ecgonine-RSA	Vaccine Vial	7/21/75
Adri/Technam	CMM-BSA and CMM-RSA (Carboxymethylmorphine Bovine Serum Albumin or Carboxymethylmorphine Rabbit Serum Albumin).	Vaccine Vial: 10ml	5/03/73
Adri/Technam	Cannabuse Cannabidiol Standard	Disks: 25/package	5/03/85
Adri/Technam	Cannabuse Delta 8 THC Carboxylic Acid Standard	Disks: 25/package	9/19/84
Adri/Technam	Cannabuse Delta 8 THC Carboxylic Acid Standard	Vial: 6 ml	9/19/84
Adri/Technam	Cannabuse Delta 9 THC Carboxylic Acid Standard	Vial: 6 ml	9/19/84
Adri/Technam	Cannabuse Delta 9 THC Carboxylic Acid Standard	Disks: 25/package	9/19/84
Adri/Technam	Cannabuse Delta 9 THC Standard	Disks: 25/package	9/19/84
Adri/Technam	Cannabuse Delta 9 THC Standard	Vial: 6 ml	9/19/84
Adri/Technam	Drug Standards, Acid/Neutral Mixture A and B	Disks: 25/package	11/15/85
Adri/Technam	Drug Standards, Basic Mixture A and B	Disks: 25/package	11/15/85
Adri/Technam	Methadone Standard	Screw-cap vial: 10ml	7/17/76
Adri/Technam	Morphine Sensitized Red Blood Cells	Vaccine Vial: 50ml	5/03/73
Adri/Technam	Morphine Standard (in distilled water)	Screw-cap vial: 10ml	7/17/77
Adri/Technam	Tropinecarboxylic Acid (ecgonine)	Screw-cap Bottle: 10ml	5/03/73
Alltech-Applied Science Laboratories.	(D)-Norpseudoephedrine HCL	Ampule: 2ml	9/26/95
Alltech-Applied Science Laboratories.	4-Chlorotestosterone	Ampule: 2ml	9/26/95
Alltech-Applied Science Laboratories.	4-Methylaminorex	Vial: 1 ml	6/16/89
Alltech-Applied Science Laboratories.	6-Acetylcodeine	Vial: 1 ml	6/16/89
Alltech-Applied Science Laboratories.	6-Monoacetylmorphine HCl	Vial: 1 ml	3/30/88
Alltech-Applied Science Laboratories.	Allylisobutylbarbituric Acid	Vial: 1ml	1/24/73
Alltech-Applied Science Laboratories.	Alphaprodine HCL	Vial: 1ml	4/16/85
Alltech-Applied Science Laboratories.	Alphenal	Vial: 1ml	1/24/73
Alltech-Applied Science Laboratories.	Alprazolam	Vial: 1ml	4/16/85
Alltech-Applied Science Laboratories.	Amobarbital	Vial: 1ml	1/24/73
Alltech-Applied Science Laboratories.	Amphetamine HCL	Vial: 1ml	1/24/73
Alltech-Applied Science Laboratories.	Antidepressants Mix	Ampule: 2ml	9/26/95
Alltech-Applied Science Laboratories.	Aprobarbital	Vial: 1ml	1/24/73
Alltech-Applied Science Laboratories.	Barbital	Vial: 1ml	1/24/73
Alltech-Applied Science Laboratories.	Barbiturates, Mixture 4	Vial: 10ml	10/04/72

EXEMPT CHEMICAL PREPARATIONS—Continued

Supplier	Product name	Form	Date
Alltech-Applied Science Laboratories.	Benzoylecgonine Tetrahydrate	Vial: 1ml	4/16/85
Alltech-Applied Science Laboratories.	Benzoylecgonine Tetrahydrate 7.5ug, 50ug, 250ug	Amber Ampoule: 1ml	2/16/90
Alltech-Applied Science Laboratories.	Benzphetamine HCL	Vial: 1ml	4/16/85
Alltech-Applied Science Laboratories.	Boldenone	Ampule: 2ml	9/26/95
Alltech-Applied Science Laboratories.	Bromazepam	Vial: 1 ml	6/16/89
Alltech-Applied Science Laboratories.	Butabarbital	Vial: 1ml	1/24/73
Alltech-Applied Science Laboratories.	Butethal	Vial: 1ml	1/24/73
Alltech-Applied Science Laboratories.	Cannabidiol	Vial: 1 ml	3/30/88
Alltech-Applied Science Laboratories.	Cannabinol	Vial: 1 ml	3/30/88
Alltech-Applied Science Laboratories.	Chloral Hydrate	Vial: 1ml	4/16/85
Alltech-Applied Science Laboratories.	Chlordiazepoxide HCL	Vial: 1ml	4/16/85
Alltech-Applied Science Laboratories.	Clonazepam	Vial: 1ml	4/16/85
Alltech-Applied Science Laboratories.	Clorazepate Dipotassium	Vial: 1ml	4/16/85
Alltech-Applied Science Laboratories.	Clostebol	Ampule: 2ml	9/26/95
Alltech-Applied Science Laboratories.	Cocaethylene	Ampule: 2ml	9/26/95
Alltech-Applied Science Laboratories.	Cocaine	Vial: 1ml	1/24/73
Alltech-Applied Science Laboratories.	Codeine	Vial: 1ml	1/24/73
Alltech-Applied Science Laboratories.	Cyclopentobarbital	Vial: 1 ml	6/16/89
Alltech-Applied Science Laboratories.	Delta-8-Tetrahydro-cannabinol	Vial: 1 ml	3/30/88
Alltech-Applied Science Laboratories.	Delta-9-Tetrahydrocannabinol	Vial: 1ml	4/16/85
Alltech-Applied Science Laboratories.	Depressants, Mixture 3	Vial: 10ml	10/04/72
Alltech-Applied Science Laboratories.	Dextropropoxyphene HCL	Vial: 1ml	4/16/85
Alltech-Applied Science Laboratories.	Diacetylmorphine HCL	Vial: 1ml	4/16/85
Alltech-Applied Science Laboratories.	Diallybarbituric acid	Vial: 1ml	1/24/73
Alltech-Applied Science Laboratories.	Diazepam	Vial: 1ml	4/16/85
Alltech-Applied Science Laboratories.	Diethylpropion HCL	Vial: 1ml	4/16/85
Alltech-Applied Science Laboratories.	Dihydrocodeine	Vial: 1ml	4/16/85
Alltech-Applied Science Laboratories.	Dimethyltryptamine	Vial: 1ml	4/16/85
Alltech-Applied Science Laboratories.	Drostanolone	Ampule: 2ml	9/26/05
Alltech-Applied Science Laboratories.	Drug Mix Four	Ampoule: 1 ml	11/03/86
Alltech-Applied Science Laboratories.	Drug Mix One	Ampoule: 1 ml	10/21/86
Alltech-Applied Science Laboratories.	Drug Mix Three	Ampoule: 1 ml	11/03/86
Alltech-Applied Science Laboratories.	Drug Mix Two	Ampoule: 1 ml	10/21/86
Alltech-Applied Science Laboratories.	Ecgonine HCL	Vial: 1ml	4/16/85
Alltech-Applied Science Laboratories.	Ecgonine Methyl Ester HCl	Vial: 1 ml	3/30/88
Alltech-Applied Science Laboratories.	Ethchlorvynol	Vial: 1ml	1/24/73

EXEMPT CHEMICAL PREPARATIONS—Continued

Supplier	Product name	Form	Date
Alltech-Applied Science Laboratories.	Ethinamate	Vial: 1ml	1/24/73
Alltech-Applied Science Laboratories.	Ethylmorphine HCL	Vial: 1ml	1/24/73
Alltech-Applied Science Laboratories.	Fenfluramine HCL	Vial: 1ml	4/16/85
Alltech-Applied Science Laboratories.	Fentanyl	Vial: 1ml	4/16/85
Alltech-Applied Science Laboratories.	Flunitrazepam	Ampule: 2ml	9/26/95
Alltech-Applied Science Laboratories.	Fluoxymesterone	Ampule: 2ml	9/26/95
Alltech-Applied Science Laboratories.	Flurazepam HCL	Vial: 1ml	4/16/85
Alltech-Applied Science Laboratories.	GC/MS Benzoylecgonine Calibration Standards Kit	Kit: 3 vials	2/16/90
Alltech-Applied Science Laboratories.	Glutethimide	Vial: 1ml	1/24/73
Alltech-Applied Science Laboratories.	Halazepam	Vial: 1ml	4/16/85
Alltech-Applied Science Laboratories.	Hexobarbital	Vial: 1ml	1/24/73
Alltech-Applied Science Laboratories.	Hydrocodone Bitartrate	Vial: 1ml	1/24/73
Alltech-Applied Science Laboratories.	Hydromorphone HCL	Vial: 1ml	4/16/85
Alltech-Applied Science Laboratories.	L-Amphetamine HCl	Vial: 1 ml	6/16/89
Alltech-Applied Science Laboratories.	L-Methamphetamine HCl	Vial: 1 ml	6/16/89
Alltech-Applied Science Laboratories.	Levorphanol Tartrate	Vial: 1ml	4/16/85
Alltech-Applied Science Laboratories.	Lorazepam	Vial: 1ml	4/16/85
Alltech-Applied Science Laboratories.	Lysergic Acid	Vial: 1ml	4/16/85
Alltech-Applied Science Laboratories.	Lysergic Acid Diethylamide	Vial: 1ml	4/16/85
Alltech-Applied Science Laboratories.	Lysergic Acid N-(methylpropyl) amide	Vial: 1ml	4/16/85
Alltech-Applied Science Laboratories.	MDA HCl	Vial: 1 ml	3/30/88
Alltech-Applied Science Laboratories.	MDE HCl	Vial: 1 ml	6/16/89
Alltech-Applied Science Laboratories.	MDMA HCl	Vial: 1 ml	3/30/88
Alltech-Applied Science Laboratories.	Medazepam	Vial: 1 ml	6/16/89
Alltech-Applied Science Laboratories.	Meperidine HCL	Vial: 1ml	1/24/73
Alltech-Applied Science Laboratories.	Mephobarbital	Vial: 1ml	1/24/73
Alltech-Applied Science Laboratories.	Meprobamate	Vial: 1ml	1/24/73
Alltech-Applied Science Laboratories.	Mescaline	Vial: 1ml	1/24/73
Alltech-Applied Science Laboratories.	Mesterolone	Ampule: 2ml	9/26/95
Alltech-Applied Science Laboratories.	Methadone HCL	Vial: 1ml	1/24/73
Alltech-Applied Science Laboratories.	Methamphetamine HCL	Vial: 1ml	1/24/73
Alltech-Applied Science Laboratories.	Methandriol	Ampule: 2ml	9/26/95
Alltech-Applied Science Laboratories.	Methandrostenolone	Ampule: 2ml	9/26/95
Alltech-Applied Science Laboratories.	Methaqualone HCL	Vial: 1ml	4/16/85
Alltech-Applied Science Laboratories.	Metharbital	Vial: 1 ml	6/16/89
Alltech-Applied Science Laboratories.	Methcathinone	Ampule: 2ml	9/26/95

EXEMPT CHEMICAL PREPARATIONS—Continued

Supplier	Product name	Form	Date
Alltech-Applied Science Laboratories.	Methenolone	Ampule: 2ml	9/26/95
Alltech-Applied Science Laboratories.	Methohexital	Vial: 1ml	4/16/85
Alltech-Applied Science Laboratories.	Methylphenidate	Vial: 1ml	1/24/73
Alltech-Applied Science Laboratories.	Methyltestosterone	Ampule: 2ml	9/26/95
Alltech-Applied Science Laboratories.	Methyprylon	Vial: 1ml	4/16/85
Alltech-Applied Science Laboratories.	Mixture 1-Opiates	Vial: 1ml	10/04/72
Alltech-Applied Science Laboratories.	Mixture 2-Stimulants	Vial: 1ml	10/04/72
Alltech-Applied Science Laboratories.	Mixture 3-Depressants	Vial: 1ml	10/04/72
Alltech-Applied Science Laboratories.	Mixture 4-Barbiturates	Vial: 1ml	10/04/72
Alltech-Applied Science Laboratories.	Mixture 5-Kit of Representatives	Vial: 1ml	10/04/72
Alltech-Applied Science Laboratories.	Morphine	Vial: 1ml	1/24/73
Alltech-Applied Science Laboratories.	N-Ethylamphetamine	Amber Ampoule: 1ml	2/16/90
Alltech-Applied Science Laboratories.	N-Hydroxy-MDA	Amber Ampoule: 1ml	2/16/90
Alltech-Applied Science Laboratories.	Nalorphine	Vial: 1ml	1/24/73
Alltech-Applied Science Laboratories.	Nandrolone	Ampule: 2ml	9/26/95
Alltech-Applied Science Laboratories.	Nitrazepam	Vial: 1 ml	3/30/88
Alltech-Applied Science Laboratories.	Norcocaine	Ampule: 2ml	9/26/95
Alltech-Applied Science Laboratories.	Norcodeine HCL	Vial: 1ml	4/16/85
Alltech-Applied Science Laboratories.	Nordiazepam	Vial: 1 ml	3/30/88
Alltech-Applied Science Laboratories.	Norethandrolone	Ampule: 2ml	9/26/95
Alltech-Applied Science Laboratories.	Normeperidine HCL	Vial: 1 ml	6/16/89
Alltech-Applied Science Laboratories.	Normorphine	Vial: 1ml	4/16/85
Alltech-Applied Science Laboratories.	Opiates Mix #2	Ampule: 2ml	9/26/95
Alltech-Applied Science Laboratories.	Opiates, Mixture 1	Vial: 10ml	10/04/72
Alltech-Applied Science Laboratories.	Oxandrolone	Ampule: 2ml	9/26/95
Alltech-Applied Science Laboratories.	Oxazepam	Vial: 1ml	4/16/85
Alltech-Applied Science Laboratories.	Oxycodone HCL	Vial: 1ml	4/16/85
Alltech-Applied Science Laboratories.	Oxymesterone	Ampule: 2ml	9/26/95
Alltech-Applied Science Laboratories.	Oxymetholone	Ampule: 2ml	9/26/95
Alltech-Applied Science Laboratories.	Oxymorphone	Ampule: 2ml	9/26/95
Alltech-Applied Science Laboratories.	Oxymorphone HCL	Vial: 1ml	4/16/85
Alltech-Applied Science Laboratories.	Paraldehyde	Vial: 1ml	4/16/85
Alltech-Applied Science Laboratories.	Pemoline	Vial: 1ml	4/16/85
Alltech-Applied Science Laboratories.	Pentazocine	Vial: 1ml	4/16/85
Alltech-Applied Science Laboratories.	Pentazocine HBr	Vial: 1ml	1/24/73
Alltech-Applied Science Laboratories.	Pentobarbital	Vial: 1ml	1/24/73

EXEMPT CHEMICAL PREPARATIONS—Continued

Supplier	Product name	Form	Date
Alltech-Applied Science Laboratories.	Phencyclidine HCL	Vial: 1ml	1/24/73
Alltech-Applied Science Laboratories.	Phendimetrazine Bitartrate	Vial: 1ml	4/16/85
Alltech-Applied Science Laboratories.	Phenmetrazine HCl	Amber Ampoule: 1ml	2/16/90
Alltech-Applied Science Laboratories.	Phenobarbital	Vial: 1ml	1/24/73
Alltech-Applied Science Laboratories.	Phentermine	Vial: 1ml	4/16/85
Alltech-Applied Science Laboratories.	Prazepam	Vial: 1ml	4/16/85
Alltech-Applied Science Laboratories.	Propylbenzoyl-ecgonine	Vial: 1 ml	3/30/88
Alltech-Applied Science Laboratories.	Psilocybin	Vial: 1ml	4/16/85
Alltech-Applied Science Laboratories.	Psilocyn	Vial: 1 ml	11/06/87
Alltech-Applied Science Laboratories.	Secobarbital	Vial: 1ml	1/24/73
Alltech-Applied Science Laboratories.	Spot Chek Test Mix 1-A-PPS	Ampule: 2ml	12/19/95
Alltech-Applied Science Laboratories.	Spot Chek Test Mix 1A-M	Ampule: 2ml	12/19/95
Alltech-Applied Science Laboratories.	Spot Chek Test Mix 1B-1	Ampule: 2ml	12/19/95
Alltech-Applied Science Laboratories.	Spot Chek Test Mix 1B-2	Ampule: 2ml	12/19/95
Alltech-Applied Science Laboratories.	Spot Chek Test Mix 1B-3	Ampule: 2ml	12/19/95
Alltech-Applied Science Laboratories.	Spot Chek Test Mix 2A-A	Ampule: 2ml	12/19/95
Alltech-Applied Science Laboratories.	Spot Chek Test Mix 2A-N	Ampule: 2ml	12/19/95
Alltech-Applied Science Laboratories.	Spot Chek Test Mix 2B-B	Ampule: 2ml	12/19/95
Alltech-Applied Science Laboratories.	Spot Chek Test Mix 2C-C	Ampule: 2ml	12/19/95
Alltech-Applied Science Laboratories.	Stanolone	Ampule: 2ml	9/26/95
Alltech-Applied Science Laboratories.	Stanolone Valerate	Ampule: 2ml	9/26/95
Alltech-Applied Science Laboratories.	Stanolzolol	Ampule: 2ml	9/26/95
Alltech-Applied Science Laboratories.	Stimulants, Mixture 2	Vial: 10ml	10/04/72
Alltech-Applied Science Laboratories.	Talbutal	Vial: 1 ml	6/16/89
Alltech-Applied Science Laboratories.	Temazepam	Vial: 1ml	4/16/85
Alltech-Applied Science Laboratories.	Testosterone	Ampule: 2ml	9/26/95
Alltech-Applied Science Laboratories.	Thebaine	Vial: 1ml	1/24/73
Alltech-Applied Science Laboratories.	Thiamylal	Vial: 1ml	1/24/73
Alltech-Applied Science Laboratories.	Thiopental	Vial: 1 ml	6/16/89
Alltech-Applied Science Laboratories.	Toxi Clean Test Mix	Vial: 1 ml	3/30/88
Alltech-Applied Science Laboratories.	Triazolam	Vial: 1ml	4/16/85
Alltech-Applied Science Laboratories.	d3-Benzoylecgonine Tetrahydrate	Amber Ampoule: 5ml	2/16/90
American Biological Technologies, Inc.	Dade Urine Chemistry Control, Level I & II	Glass Vial: 15ml	4/08/91
American Monitor Corporation	Qualify I	Glass Vial: 10ml	10/09/75
American Monitor Corporation	Qualify II	Glass Vial: 10ml	10/09/75
Amerscham Corporation	[N-Methyl-3H]Lysergic Acid Diethylamide	Vial: 5–7ml	10/11/95
Amersham Corporation	5 Alpha-Dihydro[1, 2, 4, 5, 6, 7-3H]Testosterone Cat. No. TRK.443.	Vial: 6ml	4/02/91

EXEMPT CHEMICAL PREPARATIONS—Continued

Supplier	Product name	Form	Date
Amersham Corporation	5 alpha-Dihydro[1 alpha, 2 alpha(n)-3H] Testosterone Cat. No. TRK.395.	Vial: 6ml	4/02/91
Amersham Corporation	5 alpha-dihydro[1, 2, 4, 5, 6, 7-3H] Testosterone Reagent 4 T/DHT RIA Kit.	Vial: 1ml	4/11/91
Amersham Corporation	Amerlex T-3 RIA Kit, IM 2000, IM 2001, IM 2004	Kit: 50 tests, 100 tests, 400 tests.	2/18/80
Amersham Corporation	Amerlex T-4 RIA Kit, IM 2010, IM 2011, IM 2014	Kit: 50 tests, 100 tests, 400 tests.	2/06/80
Amersham Corporation	Amerlex-M B-hCG Radioimmunoassay Kit IM 3091, IM 3094	Kit: 100 tests, 400 tests	6/19/85
Amersham Corporation	Amerlex-M T3 RIA Kit, 1M.3001, 1M.3004	Kit: 100 Tests 400 Tests	8/27/86
Amersham Corporation	Amerlex-M T4 RIA Kit, 1M.3011, 1M.3014	Kit: 100 Tests 400 Tests	8/27/86
Amersham Corporation	Amerlite FSH Assay, Cat. Code LAN.0077, Cat. Code LAN.2077.	Glass vial: 5.8ml, 38.1ml, 240 tests, 144 tests.	5/30/89
Amersham Corporation	Amerlite Rubella Antibody Assay, Cat. Code LAN.0200, Cat. Code LAN.2200.	Glass vial: 5.8ml, 38.1ml, 240 tests, 144 tests.	5/30/89
Amersham Corporation	Amerlite TSH Assay, Cat. Code LAN.0001, Cat. Code LAN.2001.	Glass vial: 5.8ml, 240 tests, 144 tests.	5/30/89
Amersham Corporation	Amerlite TT3 Assay: Catalog Code Lan. 0003, Lan. 1003, and Lan.2003.	Kit: 144 tests, 240 tests, 480 tests.	11/24/87
Amersham Corporation	Amerlite TT4 Assay: Catalog Code Lan. 0002, Lan. 1002, Lan. 2002.	Kit: 144 tests, 240 tests, 480 tests.	11/24/87
Amersham Corporation	Codeine (N-methyl-C14) Hydrochloride	Custom Preparation	3/27/72
Amersham Corporation	Dihydrotestosterone Standard Reagnet 3 T/DHT RIA Kit	Vial: 5.5ml	4/11/91
Amersham Corporation	Morphine (N-methyl-C14) Hydrocloride No. CFA-363	Vial: 0.32 to 1.89mg	3/27/72
Amersham Corporation	Pheno [2-14C] barbital Catalog No. CFA 537	Vial: 0.39 to 5.85mg	11/05/74
Amersham Corporation	Prolactin RIA Kit, IM 1060, 1061	Kit: 50 tests, 100 tests	3/28/80
Amersham Corporation	T-3 Uptake (MAA) Kit-IM 1020, IM 1021, IM 1024	Kit: 50 tests, 100 tests, 400 tests.	2/05/79
Amersham Corporation	Testosterone Standard Reagent 2 T/DHT RIA Kit	Vial: 5.5ml	4/11/91
Amersham Corporation	Testosterone-3-(0-carboxymethyl)oximino-(2-[125I] iodohistamine)10uCi, 25uCi Cat. No. IM.128.	Vial: 1.2ml	4/02/91
Amersham Corporation	Testosterone/dihydrotestosterone [3H] assay system Cat. No. TRK-600.	Kit: 200 assays	4/11/91
Amersham Corporation	[1(N)-3H] Hydromorphone TRQ 4729	Vial: 47.5-95 micrograms	7/31/87
Amersham Corporation	[1(n)-3H] Codeine, No. TRK 448	Ampule: 0.002mg to 0.015mg	2/26/74
Amersham Corporation	[1(n)-3H] Morphine, No. TRK-447	Vial: 0.002 mg to 0.015 mg	2/26/74
Amersham Corporation	[1, 2, 6, 7-3H] Testosterone Cat. No. TRK.402	Vial: 6ml	4/02/91
Amersham Corporation	[1, 7, 8(n)-3H]Dihydromorphine, No. TRK-450	Vial: 0.0008 mg to 0.008 mg	2/26/74
Amersham Corporation	[15, 16(n)-3H] Etorphine, Catalog No. TRK 476	Vial: 3.45 to 6.9 micrograms	11/19/74
Amersham Corporation	[15, 16(n)-3H] Etorphine Catalog No. TRK 476	Vial: 13.8 to 27.6 micrograms	2/17/75
Amersham Corporation	[17 alpha-methyl-3H] Mibolerone Cat. No. TRK.764	Vial: 6ml	4/02/91
Amersham Corporation	[2(n)-3H] Lysergic Acid Diethylamide, No. TRK. 461	Vial: 0.003mg to 0.04mg	5/22/74
Amersham Corporation	[2-14C] Diazepam Catalog No. CFA.591	Multidose Glass Vial: 56mm x 25mm.	9/28/77
Amersham Corporation	[3H]11-Ketotestosterone Cat. No. TRQ.5919	Vial: 5.7ml	6/13/91
Amersham Corporation	[4-14C] Testosterone 50uCi, 250uCi Cat. No. CFA.129	Vial: 6ml	4/02/91
Amersham Corporation	[N-methyl-3H] Diazepam Catalog Code: TRK.572	Multidose Glass Vial: 56mm x 25mm.	9/28/77
Amersham Life Science	[125I] Iodo-Lysergic Acid Diethylamide	Vial: 1.2ml	11/22/95
Analytical Control Systems, Inc	Benchmark I TDM Control 1L, 2M, 3H	Plastic Vial: 5ml per Vial; 1-120 Vials per Bag.	10/02/91
Armed Forces Institute of Pathology.	11-nor-9-carboxy-delta 8-THC in Ethanol Ampules	Glass Ampule: 1mg/ml, 1ml, 5ml, 10ml.	1/25/82
Astral Medical Systems	Barbital Buffer	Plastic bag: 12.2g/bag	5/01/85
Astral Medical Systems	Barbital Lactate Buffer	Plastic bag: 18g/bag	5/01/85
Astral Medical Systems	Isoenzyme Buffer	Plastic bag: 14g/bag	5/01/85
Astral Medical Systems	Tris-Barbital Sodium Barbital Buffer	Plastic bag: 18g/bag	5/01/85
Atochem North America, Inc	M&T NiproTeq SB Additive	Polypropylene Containers: 5 gallons, 55 gallons.	3/10/88
BHP Diagnostix, Inc	Kallestad TDM Multi-Calibrator-Pilot Lot B-G	Kit: 7-3 ml Vials; 3 ml Vial	8/18/88
BHP Diagnostix, Inc	Kallestad TDM Multi-Calibrator-Pilot-Lot Phenobarbital	3ml, 6ml, 10ml, 30ml, 50ml Vial.	8/18/88
BHP Diagnostix, Inc	Kodak Ektachem-DT Calibrator	Bottle: 6ml	1/05/85
Baxter Diagnostics Inc	Dade Moni-Trol Gold, Level 1X Chemistry Control and Carbonate Diluent 1.	Kit: 55 Vials	8/31/94
Baxter Diagnostics Inc	Dade Moni-Trol Gold, Level 1X and Level 2X Chemistry Controls.	Bottle: 18ml	8/31/94
Baxter Diagnostics Inc	Dade Moni-Trol Gold, Level 2X Chemistry Control and Carbonate Diluent 2.	Kit: 55 Vials	8/31/94
Baxter Diagnostics Inc	EXCEL–QC Level 1 Serum Chemistry Control	Bottle: 18ml	8/4/93
Baxter Diagnostics Inc	EXCEL–QC Level 1 and Level 2 Serum Chemistry Control and Carbonate Diluent 1 and 2.	Kit: 12 Bottles	8/4/93

EXEMPT CHEMICAL PREPARATIONS—Continued

Supplier	Product name	Form	Date
Baxter Diagnostics Inc	EXCEL–QC Level 2 Serum Chemistry Control	Bottle: 18ml	8/4/93
Baxter Diagnostics Inc	Paramax Phenobarbital Calibrator I, II, III, Cat. # B–6109–11	Kit: 6 Glass Bottles; 6ml each	7/7/93
Baxter Diagnostics Inc	Paramax Phenobarbital Calibrator Level II	Glass Bottle: 6ml	7/7/93
Baxter Diagnostics Inc	Paramax Phenobarbital Calibrator Level III	Glass Bottle: 6ml	7/07/93
Bayer Corporation	Estradiol Antibody Conjugate R1	Bulk	8/16/95
Bayer Corporation	Technicon Immuno 1 Estradiol Reagents Kit No. T01–3595–51.	Kit: 1 Cassette	8/16/95
Beckman Instruments, Inc	ARRAY 360 System: Drug Calibrator	Bottle: 3ml	3/13/95
Beckman Instruments, Inc	ARRAY 360 System: Drug Control Kit	Bottle: 1ml	3/13/95
Beckman Instruments, Inc	Beckman Buffer B–2	Packet: 18.16 g	4/24/71
Beckman Instruments, Inc	Beckman ICS Drug Calibrators A, B, C, D, and E	Vials: 5ml	10/29/80
Beckman Instruments, Inc	Beckman ICS Drug Control Sera	Kit containing: 6-1ml bottles	11/11/80
Beckman Instruments, Inc	Beckman ICS Phenobarbital Conjugate	Vial: 5ml	10/29/80
Beckman Instruments, Inc	Beckman LD Buffer	Bottle: 14.3 grams	7/31/86
Beckman Instruments, Inc	Beckman LD Buffer	Bottle: 14.3 grams	7/31/86
Beckman Instruments, Inc	IFE Gel	Foil Packet: 1 Gel; Box: 10 Gels.	1/22/96
Beckman Instruments, Inc	LD Gel	Foil Pack: 1 Gel; Box: 10 Gels	1/22/96
Beckman Instruments, Inc	Paragon Electrophoresis System: Alkaline Phosphatase Isoenzyme Electrophoresis (Isopal) Kit.	Plastic Tray: 3.5ml, Box: 10 trays, Kit: 10 trays.	5/19/89
Beckman Instruments, Inc	Paragon Electrophoresis System: High Resolution Electrophoresis (HRE) Kit.	Plastic Tray: 3.5ml, Box: 10 trays, Kit: 10 trays.	5/19/89
Beckman Instruments, Inc	Paragon Electrophoresis System: Immunoelectrophoresis (IEP) Kit.	Plastic Tray: 3.5ml, Box: 10 trays, Kit: 10 trays.	5/19/89
Beckman Instruments, Inc	Paragon Electrophoresis System: Immunofixation Electrophoresis (IFE) Kit.	Plastic Tray: 3.5ml	7/31/86
Beckman Instruments, Inc	Paragon Electrophoresis System: Lactate Dehydrogenase Isoenzyme Electrophoresis (LD) Kit.	Plastic Tray: 3.5ml	7/31/86
Beckman Instruments, Inc	Paragon Electrophoresis System: Lipoprotein Electrophoresis (LIPO) Kit.	Plastic Tray: 3.5 ml, Box: 10 trays, Kit: 10 trays.	5/19/89
Beckman Instruments, Inc	Paragon Electrophoresis System: Protein Electrophoresis (SPE–II) Kit.	Plastic Tray: 3.5ml	7/31/86
Beckman Instruments, Inc	Paragon Electrophoresis System: Serum Protein Electrophoresis (SPE) Kit.	Plastic Tray: 3.5ml, Box: 10 trays, Kit: 10 trays.	5/19/89
Beckman Instruments, Inc	SPE Gel	Foil Pack: 1 Gel; Box: 10 Gels	1/22/96
Beckman Instruments, Inc	Synchron CX Systems: CX Amphetamines Reagent Kit	Cartridge: 150 Tests	3/13/95
Beckman Instruments, Inc	Synchron CX Systems: CX Barbiturates Reagent Kit	Cartridge: 150 Tests	3/13/95
Beckman Instruments, Inc	Synchron CX Systems: CX Benzodiazepine Reagent Kit	Cartridge: 150 Tests	3/13/95
Beckman Instruments, Inc	Synchron CX Systems: CX Cannabinoid 50ng and Cannabinoid 100ng Reagent Kits.	Cartridge: 150 Tests	3/13/95
Beckman Instruments, Inc	Synchron CX Systems: CX DAT High Urine Calibrator I	Bottle: 5ml	3/13/95
Beckman Instruments, Inc	Synchron CX Systems: CX DAT High Urine Calibrator II	Bottle: 5ml	3/13/95
Beckman Instruments, Inc	Synchron CX Systems: CX DAT High Urine Control I	Bottle: 5ml	3/13/95
Beckman Instruments, Inc	Synchron CX Systems: CX DAT High Urine Control II	Bottle: 5ml	3/13/95
Beckman Instruments, Inc	Synchron CX Systems: CX DAT Low Urine Calibrator I	Bottle: 5ml	3/13/95
Beckman Instruments, Inc	Synchron CX Systems: CX DAT Low Urine Calibrator II	Bottle: 5ml	3/13/95
Beckman Instruments, Inc.	Synchron CX Systems: CX DAT Low Urine Control I	Bottle: 5ml	3/13/95
Beckman Instruments, Inc	Synchron CX Systems: CX DAT Low Urine Control II	Bottle: 5ml	3/13/95
Beckman Instruments, Inc	Synchron CX Systems: CX Opiate Reagent Kit	Cartridge: 150 Tests	3/13/95
Beckman Instruments, Inc	Synchron CX Systems: CX Phencyclidine Reagent Kit	Cartridge: 150 Tests	3/13/95
Beckman Instruments, Inc	Synchron CX Systems: CX THC Urine 20ng/ml, 75ng/ml, 125ng/ml Controls.	Bottle: 5ml	3/13/95
Beckman Instruments, Inc	Synchron CX Systems: CX THC Urine 50ng/ml, 100ng/ml, 200ng/ml Calibrators.	Bottle: 5ml	3/13/95
Beckman Instruments, Inc	Synchron CX Systems: Cocaine Metabolite Reagent Kit	Cartridge: 150 Tests	3/13/95
Beckman Instruments, Inc	Synchron CX Systems: Methadone Reagent Kit	Cartridge: 150 Tests	3/13/95
Beckman Instruments, Inc	Synchron Control: Multilevel Comprehensive Chemistry Control Serum Levels I, II, III.	Plastic Bottle: 20ml; Kit: 6 bottles.	5/13/91
Beckman Instruments, Inc	Triad LINK Comprehensive Custom Unassayed Chemistry Control Serum Levels I, II, III.	Plastic Bottle: 20ml; Box: 20 Bottles.	5/13/91
Beckman Instruments, Inc	Triad NYSPATH Comprehensive Custom Unassayed Chemistry Control Serum Levels I, II, III.	Plastic Bottle: 20ml; Box 20 Bottles.	5/13/91
Beckman Instruments, Inc	Vigil PRx Multilevel Protein/Drug Control Serum Levels I, II, III	Plastic Bottle: 10ml; Kit: 6 Bottles.	5/13/91
Becton Dickinson & Company	IQ Immunochemistry System, Thyroid Stimulating Hormone Catalog No. 3010.	Kit: 25 tests	6/30/87
Becton Dickinson & Company	Neonatal T4 Tracer, Catalog #264015	Bottle: 125ml	1/15/92
Becton Dickinson & Company	T3 Tracer Solution Catalog No. 237728	Bottle: 125ml	9/27/78
Becton Dickinson & Company	TSH [125I] Tracer, Catalog No. 259624	Clear vial: 10ml	9/04/86
Behring Diagnostics	IEP Buffer, 793001 pH 8.2	Foil Pouch: 6.5 g	9/17/79
Behring Diagnostics	Immuno-tec II Agarose Plate, 839013, 850013	Foil Pouch: “5.35” x “5.25”	9/17/79
Behring Diagnostics Inc	Emit 5B3 THC; Calibrators; 0, 50, 100, 200ng/ml	Vial: 10ml	12/14/95

EXEMPT CHEMICAL PREPARATIONS—Continued

Supplier	Product name	Form	Date
Behring Diagnostics Inc	Emit II 5B3 THC Assay	Kit: 2 Vials, 500ml each	12/14/94
Bio-Metric Systems, Incorporated.	Cocaine-Enzyme Conjugate	Vial: 250ml, 100ml, 50ml	7/07/92
Bio-Metric Systems, Incorporated.	Cocaine-ImmunoPrime Modified Carrier	Vial: 50ml, 10ml	7/07/92
Bio-Metric Systems, Incorporated.	Morphine-Enzyme Conjugate	Vial: 250ml, 100ml, 50ml	7/07/92
Bio-Metric Systems, Incorporated.	Morphine-ImmunoPrime Modified Carrier	Vial: 50ml, 10ml	7/07/92
Bio-Metric Systems, Incorporated.	Phencyclidine-Enzyme Conjugate	Vial: 250ml, 100ml, 50ml	7/07/92
Bio-Metric Systems, Incorporated.	Phencyclidine-ImmunoPrime Modified Carrier	Vial: 50ml, 10ml	7/07/92
Bio-Metric Systems, Incorporated.	Tetrahydrocannabinol-Enzyme Conjugate	Vial: 250ml, 100ml, 50ml	7/07/92
Bio-Metric Systems, Incorporated.	Tetrahydrocannabinol-ImmunoPrime Carrier	Vial: 50ml, 10ml	7/07/92
Bio-Rad Laboratories	Benzodiazepines/Tricyclic Antidepressants by HPLC	Kit: 100 tests	2/08/90
Bio-Rad Laboratories	CoTube Estradiol Tracer	Glass Bottle: 125ml	7/28/93
Bio-Rad Laboratories	Dade Urine Chemistry Control Levels I AND II	Vial: 20 ml, 50 ml	1/05/88
Bio-Rad Laboratories	Dade Urine Toxiology Control	Vial: 50 ml	1/05/88
Bio-Rad Laboratories	Internal Standard	Amber vial: 30ml Flask: 200ml-2000ml.	2/08/90
Bio-Rad Laboratories	Methadone/Methadone Metabolite Reagent Kit	400 tests	9/17/90
Bio-Rad Laboratories	Quantaphase Thyroxine RIA-125I Tracer/Dissociating Reagent	Plastic bottle: 60ml, 260ml	5/06/81
Bio-Rad Laboratories	Quantaphase Thyroxine RIA-Thyroxine Immunobeads	Plastic bottle: 60ml, 260ml	5/06/81
Bio-Rad Laboratories	Quantimune Barbital Buffer	Plastic Bottle: 1000ml, 250ml, 200ml.	5/31/78
Bio-Rad Laboratories	Quantimune Radioimmunoassay T-4 Tracer, Iodine-125	Vial: 10 ml	7/21/76
Bio-Rad Laboratories	Quantimune T–3 RIA Barbital Buffer	Bottle: 220ml	9/24/82
Bio-Rad Laboratories	Quantimune T–3 RIA Test Kit	Kit: 500 tests, 100 tests	5/31/78
Bio-Rad Laboratories	Quantimune T–4 RIA Kit	Kit: 500 tests	7/01/77
Bio-Rad Laboratories	Quantimune T–4 RIA Test Kit	Kit: 5000 tests, 100 tests	5/31/78
Bio-Rad Laboratories	Quantimune Thyroxine Radioimmunoassay Barbital Buffer	Plastic Bottle with Screw cap: 1 liter.	7/01/77
Bio-Rad Laboratories	Quantimune Thyroxine Radioimmunoassay T–4 125I Tracer/Dissociating Agent.	Glass Serum Vial: 10 ml	7/01/77
Bio-Rad Laboratories	REMEDI DPS Check Mix	Vial: 20ml, Flask: 1L–10L	9/17/90
Bio-Rad Laboratories	REMEDI DPS Internal Standard Combination	Vial: 20ml, Flask: 250ml-6000ml.	9/17/90
Bio-Rad Laboratories	REMEDI DPS Internal Standard One	Vial: 20ml, Flask: 250ml-2500ml.	9/17/90
Bio-Rad Laboratories	REMEDI DPS Internal Standard Two	Vial: 20ml, Flask: 250ml-5000ml.	9/17/90
Bio-Rad Laboratories	REMEDI DPS Urine Calibrator	Vial: 20ml, Flask: 1L–10L	9/17/90
Bio-Rad Laboratories	Serum Calibrator 1	Amber vial: 20ml Polypropylene container: 20L.	2/08/90
Bio-Rad Laboratories	Serum Calibrator 2	Amber vial: 20ml Polypropylene container: 20L.	2/08/90
Bio-Rad Laboratories	Serum Calibrator for Benzodiazepines/Tricyclics, Contains 2	Box: 2 vials	2/08/90
Bio-Rad Laboratories	T–4 Competitive Binding Reagent, Iodine-125	Bottle: 385 ml	7/21/76
Bio-Rad Laboratories, (Chemical Division).	Barbital Buffer	Vial: 10ml	7/21/76
Bio-Rad Laboratories, (Chemical Division).	Barbital Buffer Powder	Plastic bottle: 250 ml	9/09/77
Bio-Rad Laboratories, (Chemical Division).	Barbital Buffer Powder	Plastic bottle: 250ml	7/21/76
Bio-Rad Laboratories, (Chemical Division).	Barbital Buffer-Dry Pack	Packages: 9.11 g., 18.21 g., 12.14 g.	5/09/74
Bio-Rad Laboratories, (Chemical Division).	Bio-Rad Electrophoresis Buffer	Bottle: 500ml	12/14/72
Bio-Rad Laboratories, (Chemical Division).	Electrophoresis Buffer, Dry-Pack	Package: 6.15 g	12/14/72
Bio-Rad Laboratories, (Chemical Division).	Immunoelectrophoresis Barbital Buffer I, pH 8.6	Dry-pack: 25.6 g	8/06/75
Bio-Rad Laboratories, (Chemical Division).	Immunoelectrophoresis Barbital Buffer II, pH 8.6	Dry-pack: 15.61 g	8/06/75
Bio-Rad Laboratories, (Chemical Division).	Immunoelectrophoresis Barbital Buffer III, pH 8.6	Dry-pack: 6.82 g	1/22/76
Bio-Rad Laboratories, (Chemical Division).	Immunoelectrophoresis Barbital Buffer III-a, pH 8.8	Dry-pack: 15.07 g	8/06/75

EXEMPT CHEMICAL PREPARATIONS—Continued

Supplier	Product name	Form	Date
Bio-Rad Laboratories, (Chemical Division).	Reagent No. 3	Bottle: 165 ml	12/14/72
Bio-Rad Laboratories, (Clinical Division).	Benzodiazepines/Tricyclics/Plasma Catecholamines (BZ/TCA/pCats) Serum Calibrators Bulk Preparations.	Polypropylene Container: 15L - 100L.	3/28/91
Bio-Rad Laboratories, (Clinical Division).	Plasma Catecholamines by HPLC, 100 Test	Kit: 100 Test	3/28/91
Bio-Rad Laboratories, (Clinical Division).	Plasma Catecholamines by HPLC, Serum Calibrator Set, 1x6 vials.	Vial: 20 ml; Set: 6 vials	3/28/91
Bio-Rad Laboratories, (ECS Division).	Benzo/TCA Control Levels I & II	Vial: 10ml Box: 6 vials	3/20/91
Bio-Rad Laboratories, (ECS Division).	Blind Performance Specimen Set Cat. #610	Kit: 5 bottles	9/14/90
Bio-Rad Laboratories, (ECS Division).	LYPHOCHEK Assayed Chemistry Control Serum (Human) Levels I and II.	Vials: 10 ml each	4/13/88
Bio-Rad Laboratories, (ECS Division).	LYPHOCHEK Immunoassay Plus Control Serum Levels 1–3	Vial: 10ml; Kit: 12 vials	9/14/90
Bio-Rad Laboratories, (ECS Division).	LYPHOCHEK Urine Toxicology Control-Confirm	Box: 10 vials; Vial: 50ml	9/14/91
Bio-Rad Laboratories, (ECS Division).	LYPHOCHEK Urine Toxicology Control-Law	Vials: 20 ml each	4/13/88
Bio-Rad Laboratories, (ECS Division).	LYPHOCHEK Urine Toxicology Control-Screen	Box: 10 vials; Vial: 20ml	9/14/90
Bio-Rad Laboratories, (ECS Division).	Liquichek Therapeutic Drug Monitoring Control (TDM), Levels 1, 2, 3.	Vial: 10ml	6/01/94
Bio-Rad Laboratories, (ECS Division).	Liquichek Unassayed Chemistry Control (Human) Levels 1, 2	Vial: 20ml	6/01/94
Bio-Rad Laboratories, (ECS Division).	Lyphochek Immunoassay Control Levels I, II, III	Vial: 10 ml	9/24/87
Bio-Rad Laboratories, (ECS Division).	Lyphochek Quantitative Urine Control Levels I and II	Vial: 20 ml, 50 ml	9/24/87
Bio-Rad Laboratories, (ECS Division).	Lyphochek Therapeutic Drug Monitoring Control (TDM), Levels I, II, III.	Vial: 10ml	8/20/84
Bio-Rad Laboratories, (ECS Division).	Lyphochek Unassayed Chemistry Control (Bovine) Levels I, II	Vial: 20 ml	9/24/87
Bio-Rad Laboratories, (ECS Division).	Lyphochek Unassayed Chemistry Control (Human) Levels I, II	Vial: 20ml	9/24/87
Bio-Rad Laboratories, (ECS Division).	Lyphochek Urine Toxicology Screen-Low Control	Vial: 20ml	6/01/94
Bio-Rad Laboratories, (ECS Division).	Lypochek Fertility Control Serum (Human) Levels 1, 2, 3	Vial: 10ml	6/01/94
Bio-Rad Laboratories, (ECS Division).	Positive for Amphetamines	Bottle: 90ml	9/14/90
Bio-Rad Laboratories, (ECS Division).	Positive for Cocaine	Bottle: 90ml	9/14/90
Bio-Rad Laboratories, (ECS Division).	Positive for Marihuana	Bottle: 90ml	9/14/90
Bio-Rad Laboratories, (ECS Division).	Positive for Opiates	Bottle: 90ml	9/14/90
Bio-Rad Laboratories, (ECS Division).	Positive for Phencyclidine	Bottle: 90ml	9/14/90
Bio-Rad Laboratories, (ECS Division).	Urine Toxicology Control No. C–470–25	Amber Vial: 50ml	9/19/79
Biochemical Diagnostics, Inc	(DL) Methadone	Vial: 1ml; 200ml (In-house)	12/22/95
Biochemical Diagnostics, Inc	(DL)-9-Carboxy-11-nor-Delta-9-THC	Vial: 1ml; 200ml (In-house)	12/22/95
Biochemical Diagnostics, Inc	Alprazolam	Vial: 1ml; 200ml (In-house)	12/22/95
Biochemical Diagnostics, Inc	Amobarbital	Vial: 1ml; 200ml (In-house)	12/22/95
Biochemical Diagnostics, Inc	Benzoylecgonine	Vial: 1ml; 200ml (In-house)	12/22/95
Biochemical Diagnostics, Inc	Butalbital	Vial: 1ml; 200ml (In-house)	12/22/95
Biochemical Diagnostics, Inc	Chlordiazepoxide	Vial: 1ml; 200ml (In-house)	12/22/95
Biochemical Diagnostics, Inc	Codeine	Vial: 1ml; 200ml (In-house)	12/22/95
Biochemical Diagnostics, Inc	D-Amphetamine	Vial: 1ml; 200ml (In-house)	12/22/95
Biochemical Diagnostics, Inc	D-Methamphetamine	Vial: 1ml; 200ml (In-house)	12/22/95
Biochemical Diagnostics, Inc	D-Propoxyphene	Vial: 1ml; 200ml (In-house)	12/22/95
Biochemical Diagnostics, Inc	Detectabuse GC/MS Liquid Control Urine	Bottle: 50ml	10/31/95
Biochemical Diagnostics, Inc	Detectabuse Immunoassay Liquid Control Urine, Series I	Bottle: 20ml	10/31/95
Biochemical Diagnostics, Inc	Detectabuse Immunoassay Liquid Control Urine, Series I, II, II, IV, V.	Bulk: Up to 100L	1/02/96
Biochemical Diagnostics, Inc	Detectabuse Immunoassay Liquid Control Urine, Series II	Bottle: 20ml	10/31/95
Biochemical Diagnostics, Inc	Detectabuse Immunoassay Liquid Control Urine, Series III	Bottle: 20ml	10/31/95
Biochemical Diagnostics, Inc	Detectabuse Immunoassay Liquid Control Urine, Series IV	Bottle: 20ml	10/31/95
Biochemical Diagnostics, Inc	Detectabuse Immunoassay Liquid Control Urine, Series V	Bottle: 20ml	10/31/95
Biochemical Diagnostics, Inc	Diazepam	Vial: 1ml; 200ml (In-house)	12/22/95

EXEMPT CHEMICAL PREPARATIONS—Continued

Supplier	Product name	Form	Date
Biochemical Diagnostics, Inc	Hydrocodone Bitartrate	Vial: 1ml; 200ml (In-house)	12/22/95
Biochemical Diagnostics, Inc	LSD 25ug/ml	Vial: 1ml	12/22/95
Biochemical Diagnostics, Inc	Meperidine	Vial: 1ml; 200ml (In-house)	12/22/95
Biochemical Diagnostics, Inc	Methaqualone	Vial: 1ml; 200ml (In-house)	12/22/95
Biochemical Diagnostics, Inc	Morphine	Vial: 1ml; 200ml (In-house)	12/22/95
Biochemical Diagnostics, Inc	Morphine-6-Glucuronide	Vial: 1ml; 200ml (In-house)	12/22/95
Biochemical Diagnostics, Inc	Nordiazepam	Vial: 1ml; 200ml (In-house)	12/22/95
Biochemical Diagnostics, Inc	Oxazepam	Vial: 1ml; 200ml (In-house)	12/22/95
Biochemical Diagnostics, Inc	Oxycodone	Vial: 1ml; 200ml (In-house)	12/22/95
Biochemical Diagnostics, Inc	Oxymorphone	Vial: 1ml; 200ml (In-house)	12/22/95
Biochemical Diagnostics, Inc	Pentobarbital	Vial: 1ml; 200 ml (In-house)	12/22/95
Biochemical Diagnostics, Inc	Phencyclidine	Vial: 1ml; 200ml (In-house)	12/22/95
Biochemical Diagnostics, Inc	Phenobarbital	Vial: 1ml; 200ml (In-house)	12/22/95
Biochemical Diagnostics, Inc	Phentermine	Vial: 1ml; 200ml (In-house)	12/22/95
Biochemical Diagnostics, Inc	Secobarbital	Vial: 1ml; 200ml (In-house)	12/22/95
Biochemical Diagnostics, Inc	Triazolam	Vial: 1ml; 200ml (In-house)	12/22/95
Biodiagnostic International	Liqui-Ura Toxic Control	Vial: 5ml	3/11/85
Biopool International	Drugs of Abuse Controls GC/MS L-2, L-3 and L-4	Kit: 6 Vials	1/04/94
Biopool International	Drugs of Abuse Controls GC/MS L-2, L-3 and L-4	Vial: 12ml	1/04/94
Biopool International	Drugs of Abuse Controls L-2, L-3 and L-4	Kit: 6 Vials	1/04/94
Biopool International	Drugs of Abuse Controls L-2, L-3 and L-4	Vial: 12ml	1/04/94
Bioscientific Corp	ECA Buffer, Catalog No. ECA 05805	Plastic Packet: 18.0 g., 10 packets per box.	7/14/77
Bioscientific Corp/ECA	Agarose Barbital Buffer CSB 470182	Vial: 7 drams	11/15/90
Bioscientific Corp/ECA	Agarose Barbital Buffer ECA 470182	Vial: 12 drams; Box: 3 vials	11/15/90
Bioscientific Corp/ECA	Agarose Barbital-EDTA Buffer ECA 470180	Vial: 12 drams, Box: 3 vials	11/15/90
Bioscientific Corp/ECA	ECA Buffer ECA 0320024	Vial: 12 drams, Box: 12 vials	11/15/90
Bioscientific Corp/ECA	General Procedure Agarose Film #ECA 470100	Plastic Tray 4.5″x5″, Kit: 10 trays.	9/10/90
Bioscientific Corp/ECA	LD Agarose Gel #CSB 102	Plastic Tray: 3″x5″, Kit: 10 trays.	9/10/90
Bioscientific Corp/ECA	Protein Agarose Gel #PSB 103	Plastic Tray 3″x5″, Kit: 10 trays.	9/10/90
Biosite Diagnostics	Alprazolam Stock Solution, 31366	Vial: 2ml	5/26/92
Biosite Diagnostics	Alprazolam Threshold Control Calibrators 2-6; 31446-31450	Flask: 250ml	5/26/92
Biosite Diagnostics	Amphetamine Enzyme Conjugate 31111, Bulk Formulation	Vial: 100ml, 1.5ml	10/24/90
Biosite Diagnostics	Amphetamine QC Control	Vial: 5ml	10/29/91
Biosite Diagnostics	Amphetamine QC Control (Bulk)	Bottle: 0.5L–10L	10/29/91
Biosite Diagnostics	Barbiturate Conjugate	Plastic Bottles: 2ml–60 ml	11/30/90
Biosite Diagnostics	Barbiturate Conjugate Control	Vial: 0.5, 1, 2, 5, 15, 50ml	3/28/94
Biosite Diagnostics	Barbiturate Derivative	Vial: 8, 16, 32 ml	11/30/90
Biosite Diagnostics	Barbiturate Enzyme Conjugate 31110, Bulk Formulation	Vial: 100ml, 1.5ml	10/24/90
Biosite Diagnostics	Barbiturate QC Control	Vial: 5ml	10/29/91
Biosite Diagnostics	Barbiturate QC Control (Bulk)	Bottle: 5L–10L	10/29/91
Biosite Diagnostics	Barbiturate Threshold Control Calibrators 2-6; 31356-31360	Flask: 250ml	5/26/92
Biosite Diagnostics	Benzodiazepine Controls, 1-6 31088-31093, 7-11 31098-31102, Bulk Formulation.	Vial: 50ml, 1.5ml	10/24/91
Biosite Diagnostics	Benzodiazepine QC Control 3	Vial: 5ml	10/29/91
Biosite Diagnostics	Benzodiazepines QC Control 1	Vial: 5ml	10/29/91
Biosite Diagnostics	Benzodiazepines QC Control 1 (Bulk)	Bottle: 0.5L–10L	10/29/91
Biosite Diagnostics	Benzodiazepines QC Control 2	Vial: 5ml	10/29/91
Biosite Diagnostics	Benzodiazepines QC Control 2 (Bulk)	Bottle: 0.5L–10L	10/29/91
Biosite Diagnostics	Benzodiazepines QC Control 3 (Bulk)	Bottle: 0.5L–10L	10/29/91
Biosite Diagnostics	Benzoylecgonine Conjugate	Plastic Bottles: 2ml–60 ml	11/30/90
Biosite Diagnostics	Benzoylecgonine Conjugate II, III, IV, & V	Vial: 1.5ml	3/14/91
Biosite Diagnostics	Benzoylecgonine Conjugate II, III, IV, & V Bulk	Bottle: 5, 15, 30 & 60 ml	3/14/91
Biosite Diagnostics	Benzoylecgonine Controls, 1-5 31041-31045, Bulk Formulation.	Vial: 50ml, 1.5ml	10/24/90
Biosite Diagnostics	Benzoylecgonine Enzyme Conjugate 31105, Bulk Formulation	Vial: 100ml, 1.5ml	10/24/90
Biosite Diagnostics	Benzoylecgonine Enzyme Conjugate II	Vial: 1.5ml	3/14/91
Biosite Diagnostics	Benzoylecgonine Standards, 1-6 31035-31040, Bulk Formulation.	Vial: 50ml, 1.5ml	10/24/90
Biosite Diagnostics	Benzoylecgonine Stock Solution	Vial: 3ml	6/01/95
Biosite Diagnostics	Benzoylecgonine Stock Solution, 31322	Vial: 2ml	5/26/92
Biosite Diagnostics	Benzoylecgonine Stock Solution, Bulk	Bottle: 15-100ml	6/01/95
Biosite Diagnostics	Benzoylecgonine Threshold Control Calibrators 2-6; 31341-31345.	Flask: 250ml	5/26/92
Biosite Diagnostics	Cocaine QC Control	Vial: 5ml	10/29/91
Biosite Diagnostics	Cocaine QC Control (Bulk)	Bottle: 0.5L–10L	10/29/91
Biosite Diagnostics	Conjugate (Intermediate)	Vial: 2, 5, 15, 50, 60, 100, 250, 500, 1000, 2000ml.	3/28/94

EXEMPT CHEMICAL PREPARATIONS—Continued

Supplier	Product name	Form	Date
Biosite Diagnostics	Conjugate Bead, Intervention	Bottle: 15, 50, 100, 250, 500, 1000, 2000ml.	11/09/93
Biosite Diagnostics	Conjugate Bead, TCA	Bottle: 15, 50, 100, 250, 500, 1000, 2000ml.	11/09/93
Biosite Diagnostics	Conjugate Beads (Bulk)	Bottles: 15, 50, 100, 250, 500, 1000, 2000ml.	11/30/90
Biosite Diagnostics	Conjugate Beads Triage MTD	Vial: 15, 50, 100, 250, 500, 1000, 2000ml.	3/28/94
Biosite Diagnostics	Conjugate Beads Triage and MTD	Vial: 15, 50, 100, 250, 500, 1000, 2000ml.	3/28/94
Biosite Diagnostics	D-Amphetamine Stock Solution, 31323	Vial: 2ml	5/26/92
Biosite Diagnostics	D-Amphetamine Threshold Control Calibrator, 31376	Flask: 250ml	5/26/92
Biosite Diagnostics	D-Methamphetamine Stock Solution, 31324	Vial: 2ml	5/26/92
Biosite Diagnostics	D-Methamphetamine Threshold Control Calibrator, 31381	Flask: 250 ml	5/26/92
Biosite Diagnostics	Drugs of Abuse Controls-Level 2, Positive	Pack: 6 Vials; 5ml/vial	12/14/94
Biosite Diagnostics	Drugs of Abuse Controls-Level 3, Hi-Positive	Pack: 6 Vials; 5ml/vial	12/14/94
Biosite Diagnostics	Estazolam TTC Stock Solution	Vial: 1ml	11/09/93
Biosite Diagnostics	Estazolam Threshold Control Calibrators 2–6	Vial: .25–1ml	11/09/93
Biosite Diagnostics	Estazolam Threshold Control Calibrators 2–6 Bulk Formulation.	Vial: 5–20ml	11/09/93
Biosite Diagnostics	Flurazepam Enzyme Conjugate 31109, Bulk Formulation	Vial: 100ml, 1.5ml	10/24/90
Biosite Diagnostics	Flurazepam Standards, 1–7 31081–31087, Bulk Formulation	Vial: 50ml, 1.5ml	10/24/90
Biosite Diagnostics	Intervention Bead Solution	Vial: 2, 5, 15, 50, 100, 250, 500ml.	3/28/94
Biosite Diagnostics	Intervention Conjugate (Bulk)	Bottled/Flask: .1L–4L	11/09/93
Biosite Diagnostics	Labeled Benzoylecgonine Conjugate	Plastic Bottles: 0.5, 1, 2 & 5 L	11/30/90
Biosite Diagnostics	Labeled Conjugate Mixture 13	Vial: 2, 5, 15, 50, 100, 250, 500ml.	3/28/94
Biosite Diagnostics	Labeled Conjugate Mixture 2	Plastic Bottles: 10ml–1L	11/30/90
Biosite Diagnostics	Labeled Conjugate Mixture 5	Bottles: 2, 5, 15, 50, 100, 250, 500ml.	10/29/91
Biosite Diagnostics	Labeled Conjugate Mixture 7	Bottle: 20L, 10L, 5L, 1L	12/22/92
Biosite Diagnostics	Labeled Conjugate Mixture 9	Plastic Bottles: 0.5, 1, 2 & 5 L	11/30/90
Biosite Diagnostics	Labeled Morphine Conjugate	Plastic Bottles: 0.5, 1, 2 & 5 L	11/30/90
Biosite Diagnostics	Labeled TCA Conjugate	Bottled/Flask: 2, 5, 15, 50, 60, 100, 250, 260, 500, 1000, 2000ml.	11/09/93
Biosite Diagnostics	Labeled THC Conjugate	Plastic Bottles: 10ml–1L	11/30/90
Biosite Diagnostics	Labeled THC Conjugate (Mixture 13)	Flask: 500, 250, 100, 50, 15, 5, 2ml.	3/28/94
Biosite Diagnostics	Labeled THC Conjugate Mixture 4	Bottles: 2, 5, 15, 50, 100, 250, 500ml.	10/29/91
Biosite Diagnostics	Labeled Triage MTD Conjugate (Bulk)	Vial: 2, 5, 15, 50, 60, 100, 250, 260, 500ml.	3/28/94
Biosite Diagnostics	Lorazepam Enzyme Conjugate 31108, Bulk Formulation	Vial: 100ml, 1.5ml	10/24/90
Biosite Diagnostics	Lorazepam Standards, 1–4 31094–31097, Bulk Formulation	Vial: 50ml, 1.5ml	10/24/90
Biosite Diagnostics	Lormetazepam Stock Solution	Vial: 1ml	11/09/93
Biosite Diagnostics	Methadone Control	Vial: 2ml	12/22/92
Biosite Diagnostics	Methadone Standards 1–6	Vial: 2ml, 50ml	12/22/92
Biosite Diagnostics	Methadone Stock Solution	Vial: 2ml, 50ml	12/22/92
Biosite Diagnostics	Methamphetamine Enzyme Conjugate 31104, Bulk Formulation.	Vial: 100ml, 1.5ml	10/24/90
Biosite Diagnostics	Methamphetamine QC Control	Vial: 5ml	10/29/91
Biosite Diagnostics	Methamphetamine QC Control (Bulk)	Bottle: 5L–10L	10/29/91
Biosite Diagnostics	Morphine Conjugate	Plastic Bottles: 2ml–60 ml	11/30/90
Biosite Diagnostics	Morphine Control 3	Vial: 2ml, 50ml	12/22/92
Biosite Diagnostics	Morphine Controls, 1–5 31076–31080, Bulk Formulation	Vial: 50ml, 1.5ml	10/24/90
Biosite Diagnostics	Morphine Enzyme Conjugate 31107, Bulk Formulation	Vial: 100ml, 1.5ml	10/24/90
Biosite Diagnostics	Morphine Standard 6, 31220 Bulk Formulation	Vial: 1.5ml, 5–20ml; Flask: 20–50ml.	3/14/91
Biosite Diagnostics	Morphine Standards, 1–5 31071–31075, Bulk Formulation	Vial: 50ml, 1.5ml	10/24/90
Biosite Diagnostics	Morphine Stock Solution, 31325	Vial: 2ml	5/26/92
Biosite Diagnostics	Opiate QC Control	Vial: 5ml	10/29/91
Biosite Diagnostics	Opiate QC Control (Bulk)	Bottle: 05.L–10L	10/29/91
Biosite Diagnostics	Opiate Threshold Control Calibrators 2–6; 31346–31350	Flask: 250ml	5/26/92
Biosite Diagnostics	PCP QC Control	Vial: 5ml	10/29/91
Biosite Diagnostics	PCP QC Control (Bulk)	Bottle: 0.5L–10L	10/29/91
Biosite Diagnostics	Phencyclidine Control 7 Bulk Formulation	Vial: 5–20ml	11/09/93
Biosite Diagnostics	Phencyclidine Controls 5–6, 31255–31256 Bulk Formulation	Vial: 1.5ml, 5–20ml; Flask: 20–50ml.	3/14/91
Biosite Diagnostics	Phencyclidine Controls, 1–4 31010–31013, Bulk Formulation	Vial: 50ml, 1.5ml	10/24/90
Biosite Diagnostics	Phencyclidine Enzyme Conjugate 31103, Bulk Formulation	Vial: 100ml, 1.5ml	10/24/90

EXEMPT CHEMICAL PREPARATIONS—Continued

Supplier	Product name	Form	Date
Biosite Diagnostics	Phencyclidine Standard 7	Vial: .25–1ml	11/09/93
Biosite Diagnostics	Phencyclidine Standards 1–4 31006–31009, Bulk Formulation	Vial: 50ml, 1.5ml	10/24/90
Biosite Diagnostics	Phencyclidine Standards 5–6, 31253–31254 Bulk Formulation	Vial: 1.5ml, 5–20 ml; Flask: 20–50ml.	3/14/91
Biosite Diagnostics	Phencyclidine Stock Solution, 31321	Vial: 2ml	5/26/92
Biosite Diagnostics	Phencyclidine Threshold Control Calibrators 2–6; 31366–31370.	Flask: 250ml	5/26/92
Biosite Diagnostics	Phenobarbital Controls, 1–8 31063–31070, Bulk Formulation	Vial: 50ml, 1.5ml	10/24/90
Biosite Diagnostics	Phenobarbital Standards, 1–8 31055–31062, Bulk Formulation	Vial: 50ml, 1.5ml	10/24/90
Biosite Diagnostics	RT–5 Drugs of Abuse, Positive	Pack: 6 Vials; 5ml/vial	12/14/94
Biosite Diagnostics	Secobarbital Stock Solution, 31326	Vial: 2ml	5/26/92
Biosite Diagnostics	THC Conjugate	Plastic Bottles: 2ml–60 ml	11/30/90
Biosite Diagnostics	THC Conjugate Control	Vial: 0.5, 1, 2, 5, 15, 50ml	3/28/94
Biosite Diagnostics	THC Controls, 1–3 31052–31054, Bulk Formulation	Vial: 50ml, 1.5ml	10/24/90
Biosite Diagnostics	THC Enzyme Conjugate 31106, Bulk Formulation	Vial: 100ml, 1.5ml	10/24/90
Biosite Diagnostics	THC QC Control	Vial: 5ml	10/29/91
Biosite Diagnostics	THC QC Control (Bulk)	Bottle: 0.5L–10L	10/29/91
Biosite Diagnostics	THC Standards, 1–6 31046–31051, Bulk Formulation	Vial: 50ml, 1.5ml	10/24/90
Biosite Diagnostics	THC Standards, 7–9	Vial: .25–1ml	11/09/93
Biosite Diagnostics	THC Standards, 7–9 Bulk Formulation	Vial: 5–20ml	11/09/93
Biosite Diagnostics	THC Threshold Control Calibrators 2–6 31371–31375	Flask: 250ml	5/26/92
Biosite Diagnostics	Temazepam Stock Solution, 31337	Vial: 2ml	5/26/92
Biosite Diagnostics	Temazepam Threshold Control Calibrators 2–6 31451–31455	Flask: 250ml	5/26/92
Biosite Diagnostics	Threshold Control A & B	Vial: 5ml	10/29/91
Biosite Diagnostics	Threshold Control A & B (Bulk)	Bottle: 1L–20L	10/29/91
Biosite Diagnostics	Threshold Control F–1	Vial: 3.5–5ml	6/01/96
Biosite Diagnostics	Threshold Control F–1, Bulk Solution	Bottle: .05–5L	6/01/95
Biosite Diagnostics	Threshold Controls C, D, E, F, G, H	Vial: 3.5–5ml	11/09/93
Biosite Diagnostics	Thresholds C, D, E, F, G, H Bulk Solution	Bottle: 1–5ml	11/09/93
Biosite Diagnostics	Triage 6 Panel for Drugs of Abuse	Box: 10, 25 cassettes	10/05/92
Biosite Diagnostics	Triage 7 Conjugate	Vial: 2, 5, 15, 50, 60, 100, 250, 260, 500ml.	3/28/94
Biosite Diagnostics	Triage 8 Panel for Drugs of Abuse	Box: 3, 10, 25 Cassettes	3/23/94
Biosite Diagnostics	Triage 8 Panel for Drugs of Abuse	Box: 3, 10, 25 Cassettes	3/28/94
Biosite Diagnostics	Triage 8 Panel for Drugs of Abuse	Pouch: 1 Cassette	3/28/94
Biosite Diagnostics	Triage DOA Demo Control	Vial: 5ml	10/29/91
Biosite Diagnostics	Triage DOA Demo Control (Bulk)	Bottle: 0.5L–10L	10/29/91
Biosite Diagnostics	Triage Drug Screen Control	Vial: 5ml	10/29/91
Biosite Diagnostics	Triage Drug Screen Control (Bulk)	Bottle: 0.5–20L	10/29/91
Biosite Diagnostics	Triage Intervention Panel for Drugs of Abuse	Box: 10, 25 Pouches	11/09/93
Biosite Diagnostics	Triage Intervention Test Device	Pouch: 1 each	11/09/93
Biosite Diagnostics	Triage Panel for Drugs of Abuse	Box: 10, 25 cassettes	11/30/90
Biosite Diagnostics	Triage Panel for Drugs of Abuse Plus Tricyclic Antidepressants.	Box: 10, 25 Pouches	11/09/93
Biosite Diagnostics	Triage Panel for Drugs of Abuse Plus Methadone	Box; 3, 10, 25 Cassettes	3/23/94
Biosite Diagnostics	Triage Panel for Drugs of Abuse Plus Methadone	Box: 3, 10, 25 Cassettes	3/28/94
Biosite Diagnostics	Triage Panel for Drugs of Abuse Plus Methadone Test Device	Pouch: 1 Cassette	3/28/94
Biosite Diagnostics	Triage Panel for Drugs of Abuse Plus Tricyclic Antidepressants, Cat #92000.	Kit: 25 Tests	11/01/93
Biosite Diagnostics	Triage Panel for Drugs of Abuse plus Tricyclic Antidepressants, Cat #92010.	Kit: 10 Tests	11/01/93
Biosite Diagnostics	Triage Plus TCA Test Device	Pouch: 1 each	11/09/93
Biosite Diagnostics	Triage Test Device	Metallic Pouch: 1 each	11/30/90
Biosite Diagnostics	Triage and MTD Conjugate (Bulk)	Vial: 2, 5, 15, 50, 60, 100, 250, 260, 500ml.	3/28/94
Biosite Diagnostics	Triage-7 Conjugate Beads	Bottle: 15, 50, 100, 250, 500, 1000, 2000ml.	12/22/92
Biosite Diagnostics	Triage-7 Device	Pouch: 1 cassette	12/22/92
Biosite Diagnostics	Triage-7 Panel for Drugs	Box: 10, 25 cassettes	12/22/92
Biosite Diagnostics	d-Amphetamine Controls, 1–5 31030–31034, Bulk Formulation	Vial: 50ml, 1.5ml	10/24/90
Biosite Diagnostics	d-Amphetamine Standards, 1–6 31024–31029, Bulk Formulation.	Vial: 50ml, 1.5ml	10/24/90
Biosite Diagnostics	d-Methamphetamine Controls 5–6, 31020, 31257 Bulk Formulation.	Vial: 1.5ml, 20-50ml; Flask: 20-50ml.	3/14/91
Biosite Diagnostics	d-Methamphetamine Controls, 1–4 31020–31023, Bulk Formulation.	Vial: 50ml, 1.5ml	10/24/90
Biosite Diagnostics	d-Methamphetamine Standards, 1–6 31014–31019, Bulk Formulation.	Vial: 50ml, 1.5ml	10/24/90
Boehringer Mannheim	2a Amph ED Reagent for 500ml; Cat # 1300796	Vial: 500ml	4/13/94
Boehringer Mannheim	2a Amphetamines ED Reagent for 85 ml; Cat # 1404234	Vial: 100ml	4/13/94
Boehringer Mannheim	Amphetamine System Pack for 85ml; Cat # 81-3300	Kit: 4 Bottles	4/13/94
Boehringer Mannheim	Amphetamines Systems Pack for 500ml; Cat # 81-3400	Kit: 4 Bottles	4/13/94

EXEMPT CHEMICAL PREPARATIONS—Continued

Supplier	Product name	Form	Date
Boehringer Mannheim	Bulk Reference Methadone Manufacturing Calibrators E, F, G, H, I, J, K, Open.	Carboy: 5L	8/18/95
Boehringer Mannheim	CEDIA DAU 4-Drug Cutoff Calibrator	Bottle: 10, 15ml	4/01/94
Boehringer Mannheim	CEDIA DAU 4-Drug High Calibrator	Bottle: 10, 15ml	4/01/94
Boehringer Mannheim	CEDIA DAU 4-Drug Intermediate Calibrator	Bottle: 10, 15ml	4/01/94
Boehringer Mannheim	CEDIA DAU 5-Drug Cutoff Calibrator	Bottle: 5, 15ml	6/30/94
Boehringer Mannheim	CEDIA DAU Amphetamine Assay- Cat # 83-3300 and 85–3300.	Kit: 4 Bottles; 18ml each	7/19/94
Boehringer Mannheim	CEDIA DAU Barb/Benz 200	Bottle: 10, 15ml	4/01/94
Boehringer Mannheim	CEDIA DAU Barb/Benz 300 Calibrator	Bottle: 10, 15ml	4/01/94
Boehringer Mannheim	CEDIA DAU Barb/Benz High Calibrator	Bottle: 10, 15ml	4/01/94
Boehringer Mannheim	CEDIA DAU Barb/Benz Intermediate Calibrator	Bottle: 10, 15ml	4/01/94
Boehringer Mannheim	CEDIA DAU Cocaine Assay; Cat # 83–2300 and 85–2300	Kit: 4 Bottles; 18ml each	7/19/94
Boehringer Mannheim	CEDIA DAU Cocaine Assay; Cat # 81–2300	Kit: 4 Bottles, 85ml	1/24/94
Boehringer Mannheim	CEDIA DAU Cocaine Assay; Cat # 81–2400	Kit: 4 Bottles, 500ml	1/24/94
Boehringer Mannheim	CEDIA DAU LSD Assay	Kit: 15, 70ml	12/01/95
Boehringer Mannheim	CEDIA DAU LSD Cutoff Calibrator	Bottle: 10ml	12/01/95
Boehringer Mannheim	CEDIA DAU LSD High Calibrator	Vial: 10ml	12/01/95
Boehringer Mannheim	CEDIA DAU LSD Intermediate Calibrator	Vial: 10ml	12/01/95
Boehringer Mannheim	CEDIA DAU LSD Reagent	Vial: 7, 100ml	12/01/95
Boehringer Mannheim	CEDIA DAU Methadone Assay	Kit: 18, 85, 500ml	8/18/95
Boehringer Mannheim	CEDIA DAU Methadone ED Reagent	Vial: 7, 100, 190ml	8/18/95
Boehringer Mannheim	CEDIA DAU Multi-Level THC Assay; Cat # 81–2700	Kit: 4 Bottles, 85ml	1/24/94
Boehringer Mannheim	CEDIA DAU Multi-Level THC Assay; Cat # 81–2800	Kit: 4 Bottles, 500ml	1/24/94
Boehringer Mannheim	CEDIA DAU Opiate Assay- Cat # 83–2900 and 85–2900	Kit: 4 Bottles; 18ml each	7/19/94
Boehringer Mannheim	CEDIA DAU Opiate Assay; Cat # 81–2900	Kit: 4 Bottles, 85ml	1/24/94
Boehringer Mannheim	CEDIA DAU Opiate Assay; Cat # 81–3000	Kit: 4 Bottles, 500ml	1/24/94
Boehringer Mannheim	CEDIA DAU Propoxyphene Assays; 18ml, 85ml, 500ml	Kit: 4 Bottles	11/30/94
Boehringer Mannheim	CEDIA DAU Propoxyphene Cutoff Calibrator	Vial: 10ml	11/30/94
Boehringer Mannheim	CEDIA DAU Propoxyphene High Calibrator	Vial: 10ml	11/30/94
Boehringer Mannheim	CEDIA DAU Propoxyphene Intermediate Calibrator	Vial: 10ml	11/30/94
Boehringer Mannheim	CEDIA DAU THC 100ng/ml Calibrator	Bottle: 15ml	4/01/94
Boehringer Mannheim	CEDIA DAU THC 150ng/ml Calibrator	Bottle: 15ml	4/01/94
Boehringer Mannheim	CEDIA DAU THC 25ng/ml Calibrator	Bottle: 15ml	4/01/94
Boehringer Mannheim	CEDIA DAU THC 50ng/ml Calibrator	Bottle: 15ml	4/01/94
Boehringer Mannheim	CEDIA DAU THC 75 ng/ml Calibrator	Bottle: 15ml	4/01/94
Boehringer Mannheim	CEDIA Multi-Level THC Assay-Cat # 83–2700 and 85–2700	Kit: 4 Bottles; 18ml each	7/19/94
Boehringer Mannheim	LSD Conjugate	Bottle: 50-200ml	12/01/95
Boehringer Mannheim	LSD Cutoff Calibrator Bulk	Carboy: 4L	12/01/95
Boehringer Mannheim	LSD ED Bulk Reagent	Carboy: 25L	12/01/95
Boehringer Mannheim	LSD High Calibrator Bulk	Carboy: 4L	12/01/95
Boehringer Mannheim	LSD Intermediate Calibrator Bulk	Carboy: 4L	12/01/95
Boehringer Mannheim	LSD Spiking Solution	Vial: 2L	12/01/95
Boehringer Mannheim	Methadone Conjugate	Vial: 25ml	8/18/95
Boehringer Mannheim	Methadone ED Bulk Reagent	Carboy: 50L	8/18/95
Boehringer Mannheim	Methadone Reference Manufacturing Calibrator Spiking Solution.	Carboy: 10L	8/18/95
Boehringer Mannheim	Multi-Drug Control Set, #946380	2 Vials; 15ml/vial	5/10/94
Boehringer Mannheim	Multi-Drug Set, #946379	2 Vials; 5ml/vial	5/10/94
Boehringer Mannheim	Propoxyphene Conjugate	Vial: 25ml	11/30/94
Boehringer Mannheim	Propoxyphene Cutoff Bulk Calibrator	Carboy: 4L	11/30/94
Boehringer Mannheim	Propoxyphene ED Bulk Reagent	Carboy: 25L	11/30/94
Boehringer Mannheim	Propoxyphene ED Reagent	Vial: 7, 100, 190ml	11/30/94
Boehringer Mannheim	Propoxyphene High Bulk Calibrator	Carboy: 4L	11/30/94
Boehringer Mannheim	Propoxyphene Intermediate Bulk Calibrator	Carboy: 4L	11/30/94
Boehringer Mannheim	Propoxyphene Spiking Solution	Vial: 2L	11/30/94
Boehringer Mannheim	Reference LSD Manufacturing Calibrator A, B, C, D, E, F, G, Open.	Vial: 3 or 5ml	12/01/95
Boehringer Mannheim	Reference LSD Manufacturing Calibrator Bulk A, B, C, D, E, F, G, Open.	Carboy: 5L	12/01/95
Boehringer Mannheim	Reference Methadone Manufacturing Calibrators E, F, G, H, I, J, K, Open.	Vial: 3, 5ml	8/18/95
Boehringer Mannheim	Reference Propoxyphene Bulk Manufacturing Calibrators E, F, G, H, I, J, K and Open.	Carboy: 5L	11/30/94
Boehringer Mannheim	Reference Propoxyphene Manufacturing Calibrators E, F, G, H, I, J, K and Open.	Vial: 3, 5ml	11/30/94
Boehringer Mannheim	Specialty Control Set 1, #946381	2 Vials; 15ml/vial	5/10/94
Boehringer Mannheim	Specialty Control Set 2, #946383	2 Vials: 15ml/vial	5/10/94
Boehringer Mannheim	THC 100 Control Set	Box: 2 Bottles; 15ml each	6/30/94
Boehringer Mannheim	THC 100 Controls (High & Low)	Bottle: 15ml	6/30/94
Boehringer Mannheim	THC 100 Controls (High & Low) Bulk	Carboy: 150L	6/30/94
Boehringer Mannheim	THC 25 Control Set	Box: 2 Bottles; 15ml each	6/30/94

EXEMPT CHEMICAL PREPARATIONS—Continued

Supplier	Product name	Form	Date
Boehringer Mannheim	THC 25 Controls (High & Low)	Bottle: 15ml	6/30/94
Boehringer Mannheim	THC 25 Controls (High & Low) Bulk	Carboy: 150L	6/30/94
Boehringer Mannheim	THC 50 Control Set	Box: 2 Bottles; 15ml each	6/30/94
Boehringer Mannheim	THC 50 Controls (High & Low)	Bottle: 15ml	6/30/94
Boehringer Mannheim Diagnostics.	Amphetamine Spiking	Carboy: 5–10L	9/26/95
Boehringer Mannheim Diagnostics.	Barbiturate Spiking Solution	Carboy: 5–10L	9/26/95
Boehringer Mannheim Diagnostics.	Benzodiazepine Spiking Solution	Carboy: 5–10L	9/26/95
Boehringer Mannheim Diagnostics.	Benzodiazepine Spiking Solution ''A''	Bottle: 2L	9/26/95
Boehringer Mannheim Diagnostics.	CEDIA DAU Multi-Drug Calibrator, Primary Cutoffs	Vial: 10, 15ml	9/26/95
Boehringer Mannheim Diagnostics.	CEDIA DAU Multi-Drug Calibrator, Secondary Cutoffs	Vial: 10, 15ml	9/26/95
Boehringer Mannheim Diagnostics.	CEDIA DAU Multi-Drug High Calibrator	Vial: 10, 15ml	9/26/95
Boehringer Mannheim Diagnostics.	CEDIA DAU Multi-Drug Intermediate Calibrator	Vial: 10, 15ml	9/26/95
Boehringer Mannheim Diagnostics.	Cocaine Spiking Solution	Carboy: 5–10L	9/26/95
Boehringer Mannheim Diagnostics.	Multi-Drug Cutoff, Bulk Calibrator	Bottle: 20L	9/26/95
Boehringer Mannheim Diagnostics.	Multi-Drug High Bulk Calibrator	Bottle: 20L	9/26/95
Boehringer Mannheim Diagnostics.	Multi-Drug Intermediate Bulk Calibrator	Bottle: 20L	9/26/95
Boehringer Mannheim Diagnostics.	Multi-Drug Secondary Cutoffs, Bulk Calibrator	Bottle: 20L	9/26/95
Boehringer Mannheim Diagnostics.	Opiate Spiking Solution	Carboy: 5–10L	9/26/95
Boehringer Mannheim Diagnostics.	PCP Spiking Solution	Carboy: 5–10L	9/26/95
Boehringere Mannheim Diagnostics.	Methamphetamine Spiking Solution	Carboy: 5–10L	9/26/95
California Bionuclear Corporation.	Amobarbital-2–C–14, Catalog No. 72077	Screw Cap Vial: 50 microcuries, 0.1, 0.5, and 1.0 millicuries.	1/08/75
California Bionuclear Corporation.	Cocaine (methoxy-C–14) Catalog No. 72182	Screw Cap Vial: 50 microcuries, 0.1, 0.5, and 1.0 millicuries.	1/08/75
California Bionuclear Corporation.	D-Amphetamine (propyl-1–C–14) Sulfate, Catalog No. 72078	Screw Cap Vial: 50 microcuries, 0.1, 0.5, and 1.0 millicuries.	1/08/75
California Bionuclear Corporation.	DL-Amphetamine (propyl-1–C–14) Sulfate, Catalog No. 72079	Screw Cap Vial: 50 microcuries, 0.1, 0.5, and 1.0 millicuries.	1/08/75
California Bionuclear Corporation.	Meperidine (N-methyl-C–14) Hydrochloride, Catalog No. 72508.	Screw Cap Vial: 50 microcuries, 0.1, 0.5, 1.0 millicuries.	1/08/75
California Bionuclear Corporation.	Mescaline (aminomethylene-C–14) Hydrochloride, Catalog No. 72512.	Screw Cap Vial: 50 microcuries, 0.1, 0.5, 1.0 millicuries.	1/08/75
California Bionuclear Corporation.	Methadone (heptanone-2–C–14) Hydrochloride, Catalog No. 72516.	Screw Cap Vial: 50 microcuries, 0.1, 0.5, 1.0 millicuries.	1/08/75
California Bionuclear Corporation.	Methamphetamine (propyl-1–C–14) Sulfate, Catalog No. 72517.	Screw Cap Vial: 50 microcuries, 0.1, 0.5, 1.0 millicuries.	1/08/75
California Bionuclear Corporation.	Methylphenidate (carbonyl-C–14) Hydrochloride, Catalog No. 72550.	Screw Cap Vial: 50 microcuries, 0.1, 0.5, 1.0 millicuries.	1/08/75
California Bionuclear Corporation.	Morphine (n-methyl-C–14) Hydrochloride, Catalog No. 72560	Screw Cap Vial: 50 microcuries, 0.1, 0.5, 1.0 millicuries.	1/08/75
California Bionuclear Corporation.	Pentobarbital-2–C–14, Catalog No. 72618	Screw Cap Vial: 50 microcuries, 0.1, 0.5, 1.0 millicuries.	1/08/75
California Bionuclear Corporation.	Secobarbital-2–C–14, Catalog No. 72675	Ampule: 50 microcuries, 0.1, 0.5, and 1.0 millicuries.	1/08/75

EXEMPT CHEMICAL PREPARATIONS—Continued

Supplier	Product name	Form	Date
Cambridge Medical Diagnostics, Incorporated.	125I Human Parathyroid Hormone 44–68	Vial: 5ml	3/29/85
Cambridge Medical Diagnostics, Incorporated.	125I-Tetraiodothyronine	Vial: 11ml	3/29/85
Cambridge Medical Diagnostics, Incorporated.	125I-Triiodothyronine	Vial: 11ml	3/29/85
Cambridge Medical Diagnostics, Incorporated.	Donkey Anti Goat Gamma Globulin	Vial: 5ml	3/29/85
Cambridge Medical Diagnostics, Incorporated.	Parathyroid Hormone (Human 1–84) Standard	6 Vials: 5ml each	3/29/85
Cambridge Medical Diagnostics, Incorporated.	Parathyroid Hormone Assay Buffer	Vial: 10ml	3/29/85
Cambridge Medical Diagnostics, Incorporated.	T3 AntiSerum (Rabbit)	Vial: 11ml	3/29/85
Cambridge Medical Diagnostics, Incorporated.	T3 Standard	Vial: 1ml	3/29/85
Cambridge Medical Diagnostics, Incorporated.	T4 Antiserum (Rabbit)	Vial: 11ml	3/29/85
Cambridge Medical Diagnostics, Incorporated.	T4 Standard	Vial: 1ml	3/29/85
Casco Standards	1-(1-Phenylcyclohexyl)pyrrolidine Cross-Reactant	Cryo-vial: 1.1ml Box: 25, 50, 75 vials Plastic Cup: 125ml.	3/21/90
Casco Standards	1-Phenylcyclohexylamine Cross-Reactant	Cryo-vial: 1.1ml Box: 25, 50, 75 vials Plastic Cup: 125ml.	3/23/90
Casco Standards	1-[1-(2-thienyl)-cyclohexyl]-piperdine Cross-Reactant	Cryo-vial: 1.1ml Box: 25, 50, 75 vials Plastic Cup: 125ml.	3/23/90
Casco Standards	1-[1-2(2-thienyl)-cyclohexyl]-pyrrolidine Cross-Reactant	Cryo-vial: 1.1ml Box: 25, 50, 75 Plastic Cup: 125ml.	3/23/90
Casco Standards	11-OH-delta-8-THC Cross-Reactant	Cryo-vial: 1.1ml Box: 25, 50, 75 vials Plastic Cup: 125ml.	3/21/90
Casco Standards	11-OH-delta-9-THC Cross-Reactant	Cryo-vial: 1.1ml Box: 25, 50, 75 vials Plastic cup: 125ml.	3/21/90
Casco Standards	11-nor-delta-8-THC-9-carboxilic c acid Cross-Reactant	Cryo-vial: 1.1ml Box: 25, 50, 75 vials Plastic Cup: 125ml.	3/21/90
Casco Standards	11-nor-delta-9-THC-9-carboxilic acid Cross-Reactant	Cryo-vial: 1.1ml Box: 25, 50, 75 vials.	3/21/90
Casco Standards	8-B-11-diOH-delta-9-THC Cross-Reactant	Cryo-vial: 1.1ml Box: 25, 50, 75 vials Plastic Cup: 125ml.	3/21/90
Casco Standards	8-B-OH-delta-9-THC Cross-Reactant	Cryo-vial: 1.1ml Box: 25, 50, 75 vials Plastic Cup: 125ml.	3/21/90
Casco Standards	Allobarbital Cross-Reactant	Cryo-vial: 1.1ml Box: 25, 50, 75 vials Plastic Cup: 125ml.	3/21/90
Casco Standards	Alphenal Cross-Reactant	Cryo-vial: 1.1ml Box: 25, 50 75 vials Plastic cup: 125ml.	3/21/90
Casco Standards	Alprazolam Cross-Reactant	Cryo-vial: 1.1ml Box: 25, 50, 75 vials Plastic Cup: 125ml.	3/21/90
Casco Standards	Amobarbital Cross-Reactant	Cryo-vial: 1.1ml Box: 25, 50, 75 vials Plastic Cup: 125ml.	3/21/90
Casco Standards	Aprobarbital Cross-Reactant	Cryo-vial: 1.1ml Box: 25, 50, 75 vials Plastic Cup: 125ml.	3/21/90
Casco Standards	Barbital Cross-Reactant	Cryo-vial: 1.1ml Box: 25, 50, 75 vials Plastic Cup: 125ml.	3/21/90
Casco Standards	Benzoylecgonine Cross-Reactant	Cryo-vial: 1.1ml Box: 25, 50, 75 vials Plastic Cup: 125ml.	3/21/90
Casco Standards	Benzphetamine Cross-Reactant	Cryo-vial: 1.1ml Box: 25, 50, 75 vials Plastic Cup: 125ml.	3/21/90
Casco Standards	Bromazepam Cross-Reactant	Cryo-vial: 1.1ml Box: 25, 50, 75 vials Plastic Cup: 125ml.	3/21/90
Casco Standards	Butabarbital Cross-Reactant	Cryo-vial: 1.1ml Box: 25, 50, 75 vials Plastic Cup: 125ml.	3/21/90
Casco Standards	Butalbital Cross-Reactant	Cryo-vial: 1.1ml Box: 25, 50, 75 vials Plastic Cup: 125ml.	3/21/90
Casco Standards	Butethal Cross-Reactant	Cryo-vial: 1.1ml Box: 25, 50, 75 vials Plastic Cup: 125ml.	3/21/90
Casco Standards	Cannabidiol Cross-Reactant	Cryo-Vial: 1.1ml Box: 25, 50, 75 vials Plastic Cup: 125ml.	3/21/90
Casco Standards	Cannabinol Cross-Reactant	Cryo-vial: 1.1ml Box: 25, 50, 75 vials Plastic cup: 125ml.	3/21/90
Casco Standards	Chlordiazepoxide Cross-Reactant	Cryo-vial: 1.1ml Box: 25, 50, 75 vials Plastic Cup: 125ml.	3/21/90
Casco Standards	Clonazepam Cross-Reactant	Cryo-vial: 1.1ml Box: 25, 50, 75 vials Plastic Cup: 125ml.	3/21/90

EXEMPT CHEMICAL PREPARATIONS—Continued

Supplier	Product name	Form	Date
Casco Standards	Cocaine Cross-Reactant	Cryo-vial: 1.1ml Box: 25, 50, 75 vials Plastic Cup: 125ml.	3/21/90
Casco Standards	Cyclopentobarbital Cross-Reactant	Cryo-vial: 1.1ml Box: 25, 50, 75 vials Plastic Cup: 125ml.	3/21/90
Casco Standards	Diazepam Cross-Reactant	Cryo-vial: 1.1ml Box: 25, 50, 75 vials Plastic Cup: 125ml.	3/21/90
Casco Standards	Ecgonine HCl Cross-Reactant	Cryo-vial: 1.1ml Box: 25, 50, 75 vials Plastic Cup: 125ml.	3/21/90
Casco Standards	Ecgonine-methyl ester HCl hydrate Cross-Reactant	Cryo-vial: 1.1ml Box: 25, 50, 75 vials Plastic Cup: 125ml.	3/21/90
Casco Standards	Fenfluramine Cross-Reactant	Cryo-vial: 1.1ml Box: 25, 50, 75 vials Plastic Cup: 125ml.	3/21/90
Casco Standards	Flunitrazepam Cross-Reactant	Cryo-vial: 1.1ml Box: 25, 50, 75 vials Plastic Cup: 125ml.	3/21/90
Casco Standards	Flurazepam Cross-Reactant	Cryo-vial: 1.1ml Box: 25, 50, 75 vials Plastic Cup: 125ml.	3/21/90
Casco Standards	Halazepam Cross-Reactant	Cryo-vial: 1.1ml Box: 25, 50, 75 vials Plastic Cup: 125ml.	3/21/90
Casco Standards	Hexobarbital Cross-Reactant	Cryo-vial: 1.1ml Box: 25, 50, 75 vials Plastic Cup: 125ml.	3/21/90
Casco Standards	Lorazepam Cross-Reactant	Cryo-vial: 1.1ml Box: 25, 50, 75 vials Plastic Cup: 125ml.	3/21/90
Casco Standards	MDA Cross-Reactant	Cryo-vial: 1.1ml Box: 25, 50, 75 vials Plastic Cup: 125ml.	3/21/90
Casco Standards	MDE Cross-Reactant	Cryo-vial: 1.1ml Box: 25, 50, 75 vials Plastic Cup: 125ml.	3/21/90
Casco Standards	MDMA Cross-Reactant	Cryo-vial: 1.1ml Box: 25, 50, 75 vials Plastic Cup: 125ml.	3/21/90
Casco Standards	Medazepam Cross-Reactant	Cryo-vial: 1.1ml Box: 25, 50, 75 vials Plastic Cup: 125ml.	3/21/90
Casco Standards	Midazolam Cross-Reactant	Cryo-vial: 1.1ml Box: 25, 50, 75 vials Plastic Cup: 125ml.	3/21/90
Casco Standards	Nitrazepam Cross-Reactant	Cryo-vial: 1.1ml Box: 25, 50, 75 vials Plastic Cup: 03/21/90.	3/21/90
Casco Standards	Nordiazepam Cross-Reactant	Cryo-vial: 1.1ml Box: 25, 50, 75 vials Plastic Cup: 125ml.	3/21/90
Casco Standards	Oxazepam Cross-Reactant	Cryo-vial: 1.1ml Box: 25, 50, 75 vials Plastic Cup: 125ml.	3/21/90
Casco Standards	Pentobarbital Cross-Reactant	Cryo-vial: 1.1ml Box: 25, 50, 75 vials Plastic Cup: 125ml.	3/21/90
Casco Standards	Phencyclidine Cross-Reactant	Cryo-vial: 1.1ml Box: 25, 50, 75 vials Plastic Cup: 125ml.	3/23/90
Casco Standards	Phenmetrazine Cross-Reactant	Cryo-vial: 1.1ml Box: 25, 50, 75 vials Plastic Cup: 125ml.	3/21/90
Casco Standards	Phenobarbital Cross-Reactant	Cryo-vial: 1.1ml Box: 25, 50, 75 vials Plastic Cup: 125ml.	3/21/90
Casco Standards	Phentermine Cross-Reactant	Cryo-vial: 1.1ml Box: 25, 50, 75 vials Plastic Cup: 125ml.	3/21/90
Casco Standards	Pinazepam Cross-Reactant	Cryo-vial: 1.1ml Box: 25, 50, 75 vials Plastic Cup: 125ml.	3/21/90
Casco Standards	Prazepam Cross-Reactant	Cryo-vial: 1.1ml Box: 25, 50, 75 vials Plastic Cup: 125ml.	3/21/90
Casco Standards	Propylhexedrine Cross-Reactant	Cryo-vial: 1.1ml Box: 25, 50, 75 vials Plastic Cup: 125ml.	3/21/90
Casco Standards	Secobarbital Cross-Reactant	Cryo-vial: 1.1ml Box: 25, 50, 75 vials Plastic Cup: 125ml.	3/21/90
Casco Standards	Talbutal Cross-Reactant	Cryo-vial: 1.1ml Box: 25, 50, 75 vials Plastic Cup: 125ml.	3/21/90
Casco Standards	Temazepam Cross-Reactant	Cryo-vial: 1.1ml Box: 25, 50, 75 vials Plastic Cup: 125ml.	3/21/90
Casco Standards	Triazolam Cross-Reactant	Cryo-vial: 1.1ml Box: 25, 50, 75 vials Plastic Cup: 125ml.	3/21/90
Casco Standards	d-Amphetamine Cross-Reactant	Cryo-vial: 1.1ml Box: 25, 50, 75 vials Plastic Cup: 125ml.	3/21/90
Casco Standards	d-Methamphetamine Cross-Reactant	Cryo-vial: 1.1ml Box: 25, 50, 75 vials Plastic Cup: 125ml.	3/21/90
Casco Standards	l-Amphetamine Cross-Reactant	Cryo-vial: 1.1ml Box: 25, 50, 75 vials Plastic Cup: 125ml.	3/21/90
Casco Standards	p-OH-Amphetamine Cross-Reactant	Cryo-vial: 1.1ml Box: 25, 50, 75 vials Plastic Cup: 125ml.	3/21/90
Cayman Chemical Company	Testosterone	Vial: 3ml	4/07/93

EXEMPT CHEMICAL PREPARATIONS—Continued

Supplier	Product name	Form	Date
Ciba Corning Diagnostics Corp .	Magic Lite HCG Solid Phase	Plastic vial: 50ml, Kit: 100 tests.	12/09/88
Ciba Corning Diagnostics Corp .	AACC Tox	Glass Vial: 30ml	1/20/86
Ciba Corning Diagnostics Corp .	ACS Estradiol Component Sets	Kits: 3 Vials; 18 vials	1/31/94
Ciba Corning Diagnostics Corp .	ACS Estradiol Component Sets Releasing Reagent	Bottle: 30ml	1/31/94
Ciba Corning Diagnostics Corp .	ACS Estradiol-6 Antibody Reagent	Bottle: 3ml	11/20/95
Ciba Corning Diagnostics Corp .	ACS FT4	Kit: 50 Test, 300 Test	3/26/91
Ciba Corning Diagnostics Corp .	ACS FT4 Lite Reagent	Vial: 7ml	3/26/91
Ciba Corning Diagnostics Corp .	ACS FT4 Lite Reagent	Vial: 7ml	3/26/91
Ciba Corning Diagnostics Corp .	ACS FT4 Solid Phase	Vial: 26ml	3/26/91
Ciba Corning Diagnostics Corp .	ACS Ferritin Lite Reagent	Vial: 7ml; Kit: 50, 300, 3000 Tests.	4/15/91
Ciba Corning Diagnostics Corp .	ACS Ferritin Solid Phase	Vial: 26ml; Kit: 50 Tests, 300 Tests.	4/15/91
Ciba Corning Diagnostics Corp .	ACS HCG Solid Phase	Vial: 26ml; Kit: 50 Tests, 300 Tests.	4/18/91
Ciba Corning Diagnostics Corp .	ACS Magnetic Check	Plastic Vial: 26ml	6/18/91
Ciba Corning Diagnostics Corp .	ACS Magnetic Check II	Plastic Vial: 26ml	6/18/91
Ciba Corning Diagnostics Corp .	ACS Multical E Pack (Low & High Calibrator)	Kits: 4 Vials; 2 vials	1/31/94
Ciba Corning Diagnostics Corp .	ACS Multical High Calibrator	Vial: 10ml	1/31/94
Ciba Corning Diagnostics Corp .	ACS Multical Low Calibrator	Vial: 10ml	1/31/94
Ciba Corning Diagnostics Corp .	ACS Performance Verification Test Kit	Kit: 6 Vials	6/18/91
Ciba Corning Diagnostics Corp .	ACS Phenobarbital High Calibrator	Bottle: 5ml	5/08/95
Ciba Corning Diagnostics Corp .	ACS Phenobarbital Lite Reagent	Bottle: 10ml	5/08/95
Ciba Corning Diagnostics Corp .	ACS Phenobarbital Low Calibrator	Bottle: 5ml	5/08/95
Ciba Corning Diagnostics Corp .	ACS Phenobarbital Master Curve Material	Bottle: 5ml	5/08/95
Ciba Corning Diagnostics Corp .	ACS Phenobarbital Master Curve Material Set	Set: 6 Bottles	5/08/95
Ciba Corning Diagnostics Corp .	ACS T3 Kit	Kit: 50, 300, 3000 Tests	7/22/91
Ciba Corning Diagnostics Corp .	ACS T3 Lite Reagent	Plastic Vial: 7ml	7/22/91
Ciba Corning Diagnostics Corp .	ACS T3 Solid Phase	Plastic Vial: 26ml	7/22/91
Ciba Corning Diagnostics Corp .	ACS T4	Kit: 50 Test, 300 Test	3/26/91
Ciba Corning Diagnostics Corp .	ACS T4 Lite Reagent	Vial: 7ml	3/26/91
Ciba Corning Diagnostics Corp .	ACS T4 Solid Phase	Vial: 26ml	3/26/91
Ciba Corning Diagnostics Corp .	ACS Testosterone Component Sets (50 Tests)	Set: 2 Bottles	3/28/94
Ciba Corning Diagnostics Corp .	ACS Testosterone Component Sets (500 Tests)	Set: 12 Bottles	3/28/94
Ciba Corning Diagnostics Corp .	ACS Testosterone Lite Reagent	Bottle: 10ml	3/28/94
Ciba Corning Diagnostics Corp .	ACS Testosterone Releasing Agent	Bottle: 30ml	7/20/94
Ciba Corning Diagnostics Corp .	ACS Wash Check Solid Phase	Plastic Vial: 26ml	6/18/91
Ciba Corning Diagnostics Corp .	ALP Buffer Concentrate Cat. No. 470244	Plastic Bottle: 175ml	10/28/91
Ciba Corning Diagnostics Corp .	ALP Gel/12 Cat. No. 470246	2 Plates: 24 Tests	10/28/91
Ciba Corning Diagnostics Corp .	ALP Gel/8 Cat. No. 470243	2 Plates: 16 Tests	10/28/91
Ciba Corning Diagnostics Corp .	ALP Gel/8 and Buffer Cat. No. 470240	Kit: 10 Plates; Plastic Bottle: 175ml.	10/28/91
Ciba Corning Diagnostics Corp .	Alkaline Hemoglobin Buffer Cat. No. 470580	Plastic Vial: 25 Drams	10/28/91
Ciba Corning Diagnostics Corp .	Alkaline Hemoglobin Kit/8 Cat. No. 470678	Kit: 10 Plates; Plastic Vial: 25 Drams.	10/28/91
Ciba Corning Diagnostics Corp .	CVM Chemistry (Calibration Verification Material for Chemistry), Levels 1 thru 8.	Kit: 16 Vials; 5ml/vial	6/14/94
Ciba Corning Diagnostics Corp .	Ciba Corning ANTICONV/ASTH I, II	Kit Contains: 10ml vial, 5 Vials each level.	10/22/85
Ciba Corning Diagnostics Corp .	Ciba Corning Liquid 3	Glass Vials: 15; 5ml each	1/31/95
Ciba Corning Diagnostics Corp .	Ciba Corning Liquid TDM 1	Glass Vials: 15; 5ml each	1/31/95
Ciba Corning Diagnostics Corp .	Ciba Corning Liquid TDM 1, 2, 3	Kit: 15 Vials	1/31/95
Ciba Corning Diagnostics Corp .	Ciba Corning Liquid TDM 2	Glass Vials: 15; 5ml each	1/31/95
Ciba Corning Diagnostics Corp .	Ciba Corning TDM I	Vial: 5ml, 10 vials	10/22/85
Ciba Corning Diagnostics Corp .	Ciba Corning TDM I, II & III	Kit Contains: 5 Vials each level	10/22/85
Ciba Corning Diagnostics Corp .	Ciba Corning TDM II	Vial: 5ml, 10 vials	10/22/85
Ciba Corning Diagnostics Corp .	Ciba Corning TDM III	Vial: 5ml, 10 vials	10/22/85
Ciba Corning Diagnostics Corp .	Ciba Corning TOX I, II	Kit: Contains: 10ml vial, 5 Vials each level.	12/16/85
Ciba Corning Diagnostics Corp .	Ciba Corning Urine II	Vial: 30ml	5/22/85
Ciba Corning Diagnostics Corp .	DAU I, No. 9076	Glass vial: 25ml, Box: 10 vials	5/23/89
Ciba Corning Diagnostics Corp .	DAU II No. 9077	Glass Vial: 25ml, Box: 10 vials	5/23/89
Ciba Corning Diagnostics Corp .	DAU III, No. 9078	Glass vial: 25ml, Box: 10 Vials	5/23/89
Ciba Corning Diagnostics Corp .	DAU IV, No. 9079	Glass Vial: 25ml, Box: 10 Vials	5/23/89
Ciba Corning Diagnostics Corp .	DAU V, No. 9085	Glass Vial: 25ml; Box: 10 vials	5/10/91
Ciba Corning Diagnostics Corp .	Double Four-Track Gel Cat. No. 470179	Plate: 8 Tests; Kit: 12 Plates	10/28/91
Ciba Corning Diagnostics Corp .	HDL Cholesterol Gel/8 and Buffer Cat. No. 470618	Kit: 10 Plates; Plastic Vial: 25 Drams.	10/28/91
Ciba Corning Diagnostics Corp .	High Resolution Protein Gel/8 Cat. NO. 470201	Kit: 12 Plates; 2 Plates: 16 Tests.	10/28/91

EXEMPT CHEMICAL PREPARATIONS—Continued

Supplier	Product name	Form	Date
Ciba Corning Diagnostics Corp .	High Resolution Protein Kit/8 Cat. No. 470682	Kit: 10 Plates; Plastic Vial: 25 Drams.	10/28/91
Ciba Corning Diagnostics Corp .	Immophase Ferritin Controls	Glass Vial: 3 ml	1/19/87
Ciba Corning Diagnostics Corp .	Immophase Ferritin Standards	Glass Vial: 5 ml	9/16/86
Ciba Corning Diagnostics Corp .	Immunoelectrophoresis Gel/10 Cat. No. 470090	Kit: 12 Plates; 2 Plates: 20 Tests.	10/28/91
Ciba Corning Diagnostics Corp .	Immunoelectrophoresis Kit/8 Cat. No. 470684	Kit: 10 Plates; Plastic Vial: 25 Drams.	10/28/91
Ciba Corning Diagnostics Corp .	L–TDM I	Glass Vial: 5 ml, Box: 15 Vials	5/23/89
Ciba Corning Diagnostics Corp .	L–TDM I, II, III Kit	Kit: 15 Vials	5/23/89
Ciba Corning Diagnostics Corp .	L–TDM II	Glass Vial: 5ml, Box: 15 Vials .	5/23/89
Ciba Corning Diagnostics Corp .	L–TDM III	Glass Vial: 5ml, Box: 15 Vials .	5/23/89
Ciba Corning Diagnostics Corp .	LD Isoenzyme Gel/8 and Buffer Cat. No. 470620	Kit: 10 Plates; Plastic Vial: 25 Drams.	10/28/91
Ciba Corning Diagnostics Corp .	LVM HI–CHEM DIL	Vial: 10ml	6/21/90
Ciba Corning Diagnostics Corp .	LVM, Product Code—9774	Carton: 12 vials	6/21/90
Ciba Corning Diagnostics Corp .	Ligand Plus 1, 2, 3	Kit: 15 Bottles, 5ml/bottle	6/17/94
Ciba Corning Diagnostics Corp .	Linearity Reference Material LNM–A, LNM–B, LNM–C	Vial: 10ml; Kit: 2 vials	2/12/91
Ciba Corning Diagnostics Corp .	Linearity Survey LN3–A, LN3–B, LN3–C	Vial: 10ml; Kit: 2 vials	2/12/91
Ciba Corning Diagnostics Corp .	Linearity Survey LN4–A, LN4–B, LN4–C	Vial: 25ml; Kit: 2 vials	2/12/91
Ciba Corning Diagnostics Corp .	Lipoprotein Kit/8 Cat. No. 470694	Kit: 10 Plates; Plastic Vial: 25 Drams.	10/28/91
Ciba Corning Diagnostics Corp .	MULTIQUAL ABN UNASY	Vial: 3ml, 10ml, Carton: 15 vials, 10 vials.	4/09/89
Ciba Corning Diagnostics Corp .	MULTIQUAL I Assay, Product Code 9816	Kit: 15 vials; 3ml/vial	8/05/92
Ciba Corning Diagnostics Corp .	MULTIQUAL II Assay, Product Code 9817	Kit: 15 vials; 3ml/vial	8/05/92
Ciba Corning Diagnostics Corp .	MULTIQUAL III Assay, Product Code 9818	Kit: 15 vials; 3ml/vial	8/05/92
Ciba Corning Diagnostics Corp .	MULTIQUAL NOR UNASY	Vial: 3ml, 10ml, Carton: 15 vials, 10 vials.	4/09/89
Ciba Corning Diagnostics Corp .	Magic Ferritin 2000 Standard	Plastic Vial: 1 ml	1/19/87
Ciba Corning Diagnostics Corp .	Magic Ferritin Controls	Plastic Vial: 5 ml	1/19/87
Ciba Corning Diagnostics Corp .	Magic Ferritin Standards	Polypropylene Vial: 3 ml	9/16/86
Ciba Corning Diagnostics Corp .	Magic Ferritin Zero Standard	Plastic Vial: 50 ml	1/19/87
Ciba Corning Diagnostics Corp .	Magic Lite FT4 Component Set	Set: 100, 400 Tests	7/06/94
Ciba Corning Diagnostics Corp .	Magic Lite FT4 Kit	Kit: 100 Tests	7/06/94
Ciba Corning Diagnostics Corp .	Magic Lite FT4 Lite Reagent	Bottle: 10ml, 40ml	7/06/94
Ciba Corning Diagnostics Corp .	Magic Lite FT4 Solid Phase	Bottle: 50ml, 200ml	7/06/94
Ciba Corning Diagnostics Corp .	Magic Lite Ferritin Bulk Lite Reageant	Plastic Vial: 50 ml	2/16/88
Ciba Corning Diagnostics Corp .	Magic Lite Ferritin Bulk Solid Phase	Plastic Vial: 200 ml	2/16/88
Ciba Corning Diagnostics Corp .	Magic Lite Ferritin Solid Phase	Plastic Vial: 50 ml	2/16/88
Ciba Corning Diagnostics Corp .	Magic Lite T3 Bulk Solid Phase	Plastic Vial: 200 ml	2/16/88
Ciba Corning Diagnostics Corp .	Magic Lite T3 Kit	Kit: 100 Tests	6/27/91
Ciba Corning Diagnostics Corp .	Magic Lite T3 Lite Reagent	Plastic Vial: 30ml	6/27/91
Ciba Corning Diagnostics Corp .	Magic Lite T3 Solid Phase	Plastic Vial: 75ml	6/27/91
Ciba Corning Diagnostics Corp .	Magic Lite T4 Component Set	Set: 100, 400, 1200 Tests	7/06/94
Ciba Corning Diagnostics Corp .	Magic Lite T4 Kit	Kit: 100 Tests	7/06/94
Ciba Corning Diagnostics Corp .	Magic Lite T4 Solid Phase	Bottle: 25ml, 100ml	7/06/94
Ciba Corning Diagnostics Corp .	Magic T4 Antibody	Plastic Vial: 50 ml and 200 ml	2/16/88
Ciba Corning Diagnostics Corp .	Magic T4 Antibody	Vial: 50ml, 200ml	11/01/90
Ciba Corning Diagnostics Corp .	Multi–LD Gel Cat. No. 470221	Kit: 12 Plates; 2 Plates: 32 Tests.	10/28/91
Ciba Corning Diagnostics Corp .	Multi–SPE Gel Cat. No. 470252	Kit: 12 Plates; 2 Plates: 32 Tests.	10/28/91
Ciba Corning Diagnostics Corp .	Multitrac ALP Gel/12 and Buffer Cat. No. 470240	Kit: 10 Plates; Plastic Bottle: 175ml.	10/28/91
Ciba Corning Diagnostics Corp .	Multitrac Immunofixation Kit/12 Cat. No. 470685	Kit: 10 Plates; Plastic Vial: 25 Drams.	10/28/91
Ciba Corning Diagnostics Corp .	Multitrac LD Isoenzyme Gel/12 and Buffer Cat. No. 470622	Kit: 10 Plates; Plastic vial: 25 Drams.	10/28/91
Ciba Corning Diagnostics Corp .	Multitrac LD Isoenzyme Gel/16 and Buffer Cat. No. 470625	Kit: 10 Plates; Plastic Vial: 25 Drams.	10/28/91
Ciba Corning Diagnostics Corp .	Multitrac Lipoprotein Kit/12 Cat. No. 470695	Kit: 10 Plates; Plastic Vial: 25 Drams.	10/28/91
Ciba Corning Diagnostics Corp .	Multitrac Serum Protein Kit/12 Cat. No. 470697	Kit: 10 Plates; Plastic vial: 25 Drams.	10/28/91
Ciba Corning Diagnostics Corp .	QCS ABN ASY	Vial: 5ml, Kit: 5 vials	1/21/89
Ciba Corning Diagnostics Corp .	QCS ABN ASY No. 9705/9705A	Box: 10 vials, Vial: 5 ml	12/15/89
Ciba Corning Diagnostics Corp .	QCS ABN ASY No. 9707/9707A	Box: 10 vials, Vial: 5 ml	12/15/89
Ciba Corning Diagnostics Corp .	QCS ABN UNASY No. 9691/9691A	Box: 40 vials, Vial: 25 ml	12/15/89
Ciba Corning Diagnostics Corp .	QCS ABN UNASY No. 9717/9717A	Box: 10 vials, Vial: 10 ml	12/15/89
Ciba Corning Diagnostics Corp .	QCS NOR ASY	Vial: 5 ml, Kit: 5 vials	1/21/89
Ciba Corning Diagnostics Corp .	QCS NOR ASY No. 9702/9702A	Box: 10 vials, Vial: 5 ml	12/15/89

EXEMPT CHEMICAL PREPARATIONS—Continued

Supplier	Product name	Form	Date
Ciba Corning Diagnostics Corp .	QCS NOR ASY No. 9704/9704A	Box: 10 vials, Vial: 5 ml	12/15/89
Ciba Corning Diagnostics Corp .	QCS Nor UNASY No. 9681/9681A	Box: 40 vials, Vial: 25 ml	12/15/89
Ciba Corning Diagnostics Corp .	QCS Nor UNASY No. 9716/9716A	Box: 10 vials, Vial 10 ml	12/15/89
Ciba Corning Diagnostics Corp .	Reagent A- Alt 14	Vial: 15 ml	3/24/79
Ciba Corning Diagnostics Corp .	Reagent A- Alt 7	Vial: 15 ml	3/24/79
Ciba Corning Diagnostics Corp .	Reagent A–Ammonia 10	Vial: 10 ml	3/24/79
Ciba Corning Diagnostics Corp .	Serum Protein Kit/8 Cat. No. 470696	Kit: 10 Plates; Plastic Vial: 25 Drams.	10/28/91
Ciba Corning Diagnostics Corp .	Special Barbital Buffer Set, Catalog No. 470182	Vial: 3 per kit	4/17/79
Ciba Corning Diagnostics Corp .	Universal Buffer Cat. No. 470586	Plastic Vial: 25 Drams	10/28/91
Ciba Corning Diagnostics Corp .	Universal Electrophoresis Film Agarose, Catalog No. 470100 .	Plates: 12 per kit	4/17/79
Ciba Corning Diagnostics Corp .	Universal Gel/12 Cat. No. 470554	Kit: 12 Plates; 2 Plates: 24 Tests.	10/28/91
Ciba Corning Diagnostics Corp .	Universal Gel/16 or Multi–SPE Gel Cat. No. 470066	Kit: 12 Plates; 2 Plates: 32 Tests.	10/28/91
Ciba Corning Diagnostics Corp .	Universal IEP Gel Cat. No. 470222	Kit: 12 Plates; 2 Plates: 16 Tests.	10/28/91
Ciba Corning Diagnostics Corp .	Universal II Gel/12 Cat. No. 470262	Kit: 12 Plates; 2 Plates: 24 Tests.	10/28/91
Ciba Corning Diagnostics Corp .	Universal II Gel/12 Cat. No. 470362	Kit: 12 Plates	9/22/92
Ciba Corning Diagnostics Corp .	Universal II Gel/16 Cat. No. 470268	Kit: 12 Plates; 2 Plates: 32 Tests.	10/28/91
Ciba Corning Diagnostics Corp .	Universal II Gel/8 Cat. No. 470261	Kit: 12 Plates; 2 Plates: 16 Tests.	10/28/91
Ciba Corning Diagnostics Corp .	Universal II Gel/8 Cat. No. 470361	Kit: 12 Plates	9/22/92
Ciba Corning Diagnostics Corp .	Universal PHAB Buffer Set Catalog No. 470180	Kit: 3 vials per kit	9/26/79
Clinical Diagnostic Systems, Inc	Gemini TT4 Reagent Assembly	Kit: 100 Tests	1/11/95
Cone Biotech, Inc	American Association of Bioanalysts, Urine Toxicology Survey	Vial: 20ml Kit: 2 vials	5/30/90
Cone Biotech, Inc	CAP/Cocaine Reference Material Levels II, III, and IV	Vial: 20 ml	3/07/88
Cone Biotech, Inc	College of American Pathologists (CAP) Reference Material for Cocaine in Urine.	Vial: 15ml Kit: 4 vials	5/30/90
Cone Biotech, Inc	College of American Pathologists Forensic Urine Drug Testing Survey Material (AACC/CAP).	Vial: 100ml	5/30/90
Cone Biotech, Inc	College of American Pathologists Toxicology Survey (CAP)	Vial: 50ml	5/30/90
Cone Biotech, Inc	College of American Pathologists Urine Toxicology Survey (CAP).	Vial: 50ml	5/30/90
Cone Biotech, Inc	QCM–UTI	Vial: 20ml	3/07/85
Cone Biotech, Inc	RIATRAC–Three Level Ligand Assay Controls	Vials: 8ml	2/27/84
Cone Biotech, Inc	UDM–CAP/AACC Forensic Urine Drug Testing Survey (Initial Phase).	Bottle: 60 ml	8/31/87
Cone Biotech, Inc	UDS and UDC CAP/AACC Forensic Urine Drug Testing	Vial: 30 ml	1/06/88
Consolidated Technologies, Inc	AAB Urine Drug Screening Survey	Vial: 20ml	7/14/94
Consolidated Technologies, Inc	AAB Urine Drug Screening Survey Material	Vial: 20ml	9/29/95
Consolidated Technologies, Inc	AACC/CAP Athletic Drug Testing Survey	Bottle; 125ml	7/14/94
Consolidated Technologies, Inc	AACC/CAP Forensic Urine Drug Testing Confirmatory Survey	Vial: 50ml	7/14/94
Consolidated Technologies, Inc	AACC/CAP Forensic Urine Drug Testing Screening Survey	Vial: 15ml	7/14/94
Consolidated Technologies, Inc	ACA Toxicology Urine Survey	Bottle: 15–60ml	9/29/95
Consolidated Technologies, Inc	ADT–1 thru ADT–40	Vial: 125ml	6/10/92
Consolidated Technologies, Inc	CAP Athletic Drug Testing Survey Material	Bottle: 125ml	9/29/95
Consolidated Technologies, Inc	CAP Forensic Pathology Survey	Vial: 5, 15, 50ml	7/14/94
Consolidated Technologies, Inc	CAP Forensic Pathology Survey Material	Vial: 5, 15, 50ml	9/29/95
Consolidated Technologies, Inc	CAP Forensic Urine Drug Testing Confirmatory Survey Material.	Vial: 50ml	9/29/95
Consolidated Technologies, Inc	CAP Toxicology Survey	Vial: 30, 50ml	7/14/94
Consolidated Technologies, Inc	CAP Toxicology Survey Material	Vial: Vial: 50ml	9/29/95
Consolidated Technologies, Inc	CAP Urine Toxicology Survey	Vial: 50ml	7/14/94
Consolidated Technologies, Inc	CAP Urine Toxicology Survey Material	Vial: 50ml	9/29/95
Consolidated Technologies, Inc	HIST Multi–Drug Reference Material	Vial: 15ml	10/22/92
Consolidated Technologies, Inc	Morphine Glucuronide Calibration Set	Kit: 4 Vials	9/08/92
Consolidated Technologies, Inc	Morphine Glucuronide Reference Levels 1, 2, 3	Vial: 20ml	9/08/92
DIagnostics Systems Laboratories Inc.	DHEA Controls I and II, DSL 8951 & 8952	Vial: 3.5ml	10/08/93
Dade International Inc	Absorbed Plasma and Serum Reagents Kit B4233–2	Glass Vial: 5ml (Lyophilized Material).	8/16/71
Dade International Inc	Beckman B–1 Buffer	Plastic Vial: 15 g	5/22/79
Dade International Inc	Bovine Chemistry Control I.X Special Order Request B5107–55XX.	Bottle: 18ml (Lyophilized Material).	1/29/86
Dade International Inc	Bovine Chemistry Control II.X Special Order Request B5107–65XX.	Bottle: 18 ml (Lyophilized Material).	1/29/86
Dade International Inc	Buffered Thrombin (Bovine) Catalog No. B4233–40	Bottle: 5ml (Lyophilized Material).	1/24/86
Dade International Inc	Dade CA System Buffer, Cat # B4265–32	Plastic Bottle: 500ml	7/20/95

EXEMPT CHEMICAL PREPARATIONS—Continued

Supplier	Product name	Form	Date
Dade International Inc	Dade CA System Buffer, Cat # B4265–34	Pack: 4 Bottles, 500ml each	7/20/95
Dade International Inc	Dade IAC.X Comprehensive Immuno-Assay Control, Tri-Level Unassayed.	Kit: 6 bottles	8/27/91
Dade International Inc	Dade Immunoassay Control, Level I–Low	Bottle: 9ml (Lyophilized Material).	4/25/86
Dade International Inc	Dade Immunoassay Control, Level II–Intermediate	Bottle: 9ml (Lyophilized Material).	4/25/86
Dade International Inc	Dade Immunoassay Control, Level III–High	Bottle: 9ml (Lyophilized Material).	4/25/86
Dade International Inc	Dade Immunoassay Controls, Level 1 Cat # B5700–06	Bottles: 18; 9ml each	3/28/95
Dade International Inc	Dade Immunoassay Controls, Level 2 Cat # 5700–07	Bottles: 18; 9ml each	3/28/95
Dade International Inc	Dade Immunoassay Controls, Tri-Level	Kit: 3 bottles	4/25/86
Dade International Inc	Dade Immunoassay Controls, Tri-Level Cat # B5700–05	Bottles: 18; 9ml each	3/28/95
Dade International Inc	Dade International Inc	Bottles: 18; 9ml each	3/28/95
Dade International Inc	Dade Moni-Trol Level 1 Chemistry Control	Bottle: 9ml	8/07/95
Dade International Inc	Dade Moni-Trol Level 2 Chemistry Control	Bottle: 9ml	8/07/95
Dade International Inc	Dade TDM Control Level I–Low B5700–2	Glass Vial: 9ml (Lyophilized Material).	1/21/82
Dade International Inc	Dade TDM Control Level II–Intermediate B5700–3	Glass Vial: 9ml (Lyophilized Material).	1/21/82
Dade International Inc	Dade TDM Control Level III–High B5700–4	Glass Vial: 9ml (Lyophilized Material).	1/21/82
Dade International Inc	Dade Therapeutic Drug Monitoring (TDM) Controls (Catalog No. B5700–1).	Kit: 9 Vials	3/10/87
Dade International Inc	Dade Urine Chemistry Control Level I, II	Kit: 10 Bottles; Bottle: 18ml	8/02/91
Dade International Inc	Data-Fi Fibrin Monomer Control Catalog Nos. B4233–30 & B4233–38.	Glass Vial: 5ml (Lyophilized Material).	1/24/86
Dade International Inc	Data-Fi Fibrinogen Determination Reagents Cat. No. B4233–15.	Kit: 50 tests	9/09/86
Dade International Inc	Data-Fi Protamine Sulfate Reagents Kit (Catalog No. B4233–30).	Kit: 10 Vials	3/10/87
Dade International Inc	Immunoassay Control Level I–III Unassayed	Bottle: 9ml	8/27/91
Dade International Inc	Moni-Trol Level I Chemistry Control, Assayed, Special Order Request. B5103–XXX.	Bottle: 9ml (Lyophilzed Material).	1/20/84
Dade International Inc	Moni-Trol Level I.X Special Order Request B5106–5X	Bottle: 18ml (Lyophilized Material).	6/30/83
Dade International Inc	Moni-Trol Level II Chemistry Control, Assayed, Special Order Request. B5103–XXX, B5113–XXX.	Bottle: 9ml (Lyophilized Material).	1/20/84
Dade International Inc	Moni-Trol Level II.X Special Order Request B5106–6X	Bottle: 18ml (Lyophilized Material).	6/30/83
Dade International Inc	Moni-Trol. ES Level II Chemistry Control, Assayed	Bottles: 9ml, 6.7ml (Lyophilized Material).	7/15/83
Dade International Inc	Moni-Trol. ES Level II.X Special Order Request Catalog No. B5106–85AAA Catalog No. B5106–2XAAA.	Bottle: 18ml, 9ml (Lyophilized Material).	6/27/86
Dade International Inc	Owren's Veronal Buffer	Bottle: 18ml	8/16/71
Dade International Inc	Stratus Phenobarbital Calibrators B, C, D, E, & F	Glass Vial: 3ml	6/27/83
Dade International Inc	Stratus Phenobarbital Conjugate	Glass Vial: 6ml	1/25/82
Dade International Inc	Stratus Phenobarbital Fluorometric Enzyme Immunoassay Kit (Catalog No. B5700–22).	Kit: 120 tests	3/10/87
Diagnostic Products Corporation.	125–I Barbiturate Isotope: Cat. No. TBA2, TBAY2	Vial: 110 ml, 550 ml	3/01/88
Diagnostic Products Corporation.	125–I Benzolyecgonine Isotope: Cat. No. TCN2, TCNY2	Vial: 100 ml, 550 ml	3/01/88
Diagnostic Products Corporation.	125–I Benzoylecgonine Isotope (DA): Cat. No. CND2, YCND2	Vial: 10 ml, 100 ml, 675 ml	3/01/88
Diagnostic Products Corporation.	125–I Fentanyl Isotope: Cat. No. TFN2	Vial: 500 ml	3/01/88
Diagnostic Products Corporation.	125–I Methadone Isotope: Cat. No. TMD2	Vial: 100 ml	3/01/88
Diagnostic Products Corporation.	125–I Methaqualone Isotope: Cat. No. TMQ2	Vial: 100 ml	3/01/88
Diagnostic Products Corporation.	125–I Morphine Isotope: Cat. No. TMP2, TMPY2	Vial: 110 ml, 550 ml	3/01/88
Diagnostic Products Corporation.	125–I PCP Isotope: Cat. No. TPC2, TPCY2	Vial: 110 ml, 550 ml	3/01/88
Diagnostic Products Corporation.	125–I Serum Morphine Isotope: Cat. No. TSM2	Vial: 110 ml	3/01/88
Diagnostic Products Corporation.	125–I THC Isotope: Cat. No. THD2, YTHD2	Vial: 20 ml, 110 ml, 550 ml	3/01/88
Diagnostic Products Corporation.	Amphetamine Calibrators B–F: Cat. No. APD4–8	Vial: 3.5 ml	3/01/88

EXEMPT CHEMICAL PREPARATIONS—Continued

Supplier	Product name	Form	Date
Diagnostic Products Corporation.	Amphetamine Calibrators Cat. No. MAP 4–8	Vial: 5ml	7/05/90
Diagnostic Products Corporation.	Amphetamine Controls, Cat. No. ACO1, ACO2	Vial: 5 ml	3/20/89
Diagnostic Products Corporation.	Amphetamine Controls: Cat. No. 5AC01, 5ACO2	Vial: 100 ml	3/01/88
Diagnostic Products Corporation.	Amphetamine Isotope: Cat. No. APD2, 5APD2, YAPD2	Vial: 20 ml, 100 ml, 550 ml	3/01/88
Diagnostic Products Corporation.	Amphetamine Reference Preparation: Cat. No. 5YAP7	Vial: 120 ml	3/01/88
Diagnostic Products Corporation.	Amphetamine Reference Preparations, Cat. No. APD5, APD9	Vial: 5 ml	3/20/89
Diagnostic Products Corporation.	Barbiturate Calibrators B–G: Cat. No. BAC4–9	Vial: 3.5 ml	3/01/88
Diagnostic Products Corporation.	Barbiturate Reference Preparations: Cat. No. 5YBA5	Vial: 120 ml	3/01/88
Diagnostic Products Corporation.	Benzoylecgonine Calibrators (CAC) B–F: Cat. No. COC4–8	Vial: 3.5 ml	3/01/88
Diagnostic Products Corporation.	Benzoylecgonine Calibrators (DA) B–F: Cat. No. CND4–8	Vial: 3.5 ml	3/01/88
Diagnostic Products Corporation.	Benzoylecgonine Calibrators (DA): Cat. No. CNC4–8	Vial: 3.5 ml	3/01/88
Diagnostic Products Corporation.	Benzoylecgonine Reference Preparation (DA): Cat. No. 5YCN5.	Vial: 120 ml	3/01/88
Diagnostic Products Corporation.	Benzoylecgonine Reference Preparation: Cat. No. 5YCN5	Vial: 120 ml	3/01/88
Diagnostic Products Corporation.	C-Terminal PTH Antiserum: Cat. No. PCD1	Vial: 10 ml	3/01/88
Diagnostic Products Corporation.	CON6 Immunoassay Tri-level Control Cat. No. CON6	Kit: 6 vials	3/25/91
Diagnostic Products Corporation.	Canine T3 Isotope: Cat. No. TC32	Vial: 120 ml	3/01/88
Diagnostic Products Corporation.	Coat-A-Count Barbiturates In Urine: Cat. No. TKBA1, TKBA5	Kit: 100 tests, 500 tests	3/01/88
Diagnostic Products Corporation.	Coat-A-Count Barbiturates Qualitative Determination In Urine: Cat. No. TKBAY.	Kit: 2500 tests	3/01/88
Diagnostic Products Corporation.	Coat-A-Count Canine T3: Cat. No. TKC31, TKC35	Kit: 100 tests, 500 tests	3/01/88
Diagnostic Products Corporation.	Coat-A-Count Cocaine Metabolite: Cat. No. TKCN1, TKCN5	Kit: 100 tests, 500 tests	3/01/88
Diagnostic Products Corporation.	Coat-A-Count Fentanyl: Cat. No. TKFN1	Kit: 100 tests	3/01/88
Diagnostic Products Corporation.	Coat-A-Count Free Testosterone Cat. No. TKTF 1, 2	Kit: 100, 200 Tests	3/25/91
Diagnostic Products Corporation.	Coat-A-Count LSD 100, 500, Cat. No. TKLS1, TKLS5	Kit: 8 vials, 19 vials	3/20/89
Diagnostic Products Corporation.	Coat-A-Count LSD Qualitative Determination in Urine, Cat. No. TKLSY.	Kit: 8 vials	3/20/89
Diagnostic Products Corporation.	Coat-A-Count Metabolite Qualitative Determinants In Urine: Cat. No. TKCNY.	Kit: 2500 tests	3/01/88
Diagnostic Products Corporation.	Coat-A-Count Methadone: Cat. No. TKMD1	Kit: 100 tests	3/01/88
Diagnostic Products Corporation.	Coat-A-Count Methaqualone: Cat. No. TKMQ1	Kit: 100 tests	3/01/88
Diagnostic Products Corporation.	Coat-A-Count Morphine Qualitative Determinations In Urine: Cat. No. TKMPY.	Kit: 2500 tests	3/01/88
Diagnostic Products Corporation.	Coat-A-Count Morphine: Cat. No. TKMP1, TKMP5, TKMPX	Kit: 100 tests, 500 tests, 1000 tests.	3/01/88
Diagnostic Products Corporation.	Coat-A-Count Opiates Screen Qualitative Determinations In Urine: Cat. No. TKOSY.	Kit: 2500 tests	3/1/88
Diagnostic Products Corporation.	Coat-A-Count Opiates Screen: Cat. No. TK0S1, TKOS5	Kit: 100 tests, 500 tests	3/1/88
Diagnostic Products Corporation.	Coat-A-Count PCP (Phencyclidine) In Urine: Cat. No. TKCY1	Kit: 100 tests	3/1/88
Diagnostic Products Corporation.	Coat-A-Count PCP (Phencyclidine) Qualitative Determinations In Urine: Cat. No. TKPCY.	Kit: 2500 tests	3/1/88
Diagnostic Products Corporation.	Coat-A-Count Serum Morphine: Cat. No. TKSM1	Kit: 100 tests	3/1/88
Diagnostic Products Corporation.	Coat-A-Count Total Testosterone Cat. No. TKTT 1, 2, 5	Kit: 100, 200, 500 Tests	3/25/91
Diagnostic Products Corporation.	Donkey Anti-Goat Gamma Globulin (PTH-Ultra): Cat. No. PTDG.	Vial: 10 ml	3/1/88

EXEMPT CHEMICAL PREPARATIONS—Continued

Supplier	Product name	Form	Date
Diagnostic Products Corporation.	Double Antibody Amphetamine, Cat. No. KAPD1, KAPD5	Kit: 6 vials	3/20/89
Diagnostic Products Corporation.	Double Antibody Amphetamine, Qualitative Determinations In Urine: Cat. No. KAPDY.	Kit: 2500 tests	3/1/88
Diagnostic Products Corporation.	Double Antibody Amphetamine: Cat. No. KAPD1, KAPD5	Kit: 100 tests, 500 tests	3/1/88
Diagnostic Products Corporation.	Double Antibody Cannabinoids (THC) In Urine: Cat. No. KTHD1, KTHD5.	Kit: 100 tests, 500 tests	3/1/88
Diagnostic Products Corporation.	Double Antibody Cannabinoids (THC) Quantitative Determinations In Urine: Cat. No. KTHDY.	Kit: 2500 tests	3/1/88
Diagnostic Products Corporation.	Double Antibody Cocaine Metabolite Qualitive Determination In Urine: Cat. No. KCNDY.	Kit: 2500 tests	3/1/88
Diagnostic Products Corporation.	Double Antibody Cocaine Metabolite: Cat. No. KCND1, KCND5.	Kit: 100 tests, 500 tests	3/1/88
Diagnostic Products Corporation.	Double Antibody PTH–C: KPCD1, KPCD2	Kit: 70 tests, 140 tests	3/1/88
Diagnostic Products Corporation.	Double Antibody PTH–M: Cat. No. KPMD1	Kit: 70 tests	3/1/88
Diagnostic Products Corporation.	Double Antibody Testosterone Cat. No. KTTD1, 2	Kit: 100, 200 Tests	3/25/91
Diagnostic Products Corporation.	Double Antibody Ultra-PTH: Cat. No. KPTD1, KPTD2	Kit: 70 tests, 140 tests	3/1/88
Diagnostic Products Corporation.	Enzyme-Labeled Amphetamine Cat. No. MEAP2, 5MEAP2	Vial: 20ml, 60ml	7/5/90
Diagnostic Products Corporation.	Enzyme-Labeled Cocaine Metabolite Cat. No. MECC2, 5MECC2.	Glass Vial: 11ml, 60ml	1/25/91
Diagnostic Products Corporation.	Enzyme-Labeled Methamphetamine Cat. No. MEMA2, 5MEMA2.	Vial: 11ml, 60ml	9/28/90
Diagnostic Products Corporation.	Enzyme-Labeled Opiates Cat. No. MEOP2, 5MEOP2	Vial: 20ml, 60ml	7/5/90
Diagnostic Products Corporation.	Enzyme-Labeled PCP Cat. No. MEPC2, 5MEPC2	Vial: 20ml, 60ml	7/5/90
Diagnostic Products Corporation.	Enzyme-Labeled THC Cat. No. METH 2, 5METH2	Vial: 20ml, 60ml	7/5/90
Diagnostic Products Corporation.	EquiCON–DOA Drugs of Abuse Equine Urine Controls Cat. No. EDAC.	Kit: 2 Vials	3/25/91
Diagnostic Products Corporation.	EquiCon-DOA Level 2, 3 Cat. No. EDAC 2, 3	Vial: 30ml	3/25/91
Diagnostic Products Corporation.	Fentanyl Calibrators: Cat. No. FNC4–9	Vial: 3.5 ml	3/1/88
Diagnostic Products Corporation.	Free Testosterone Calibrators Cat. No. TFC4–8	Vial: 3.5ml	3/25/91
Diagnostic Products Corporation.	Goat Anti-Rabbit Gamma Globulin/4% PEG Saline: Cat. No. 5N6.	Vial: 110 ml, 320 ml	3/1/88
Diagnostic Products Corporation.	LSD Calibrators B–F, Cat. No. LSCH–8	Vial: 5 ml	3/20/89
Diagnostic Products Corporation.	LSD Controls, Cat. No. 5LCO1, 5LCO2, LSCO1, LSCO2	Vial: 120ml, 5ml	3/20/89
Diagnostic Products Corporation.	LSD Isotope, Cat. No. TLSY2, TLS2	Vial: 105 ml, 550 ml	3/20/89
Diagnostic Products Corporation.	LSD Reference Preparation, Cat. No. 5YLS6	Vial: 120ml	3/20/89
Diagnostic Products Corporation.	Low and High Barbiturate Urinary Controls: Cat. No. 5BCO1, 5BCO2.	Vial: 100 ml	3/1/88
Diagnostic Products Corporation.	Low and High Benzoylecgonine Urinary Controls (DA): Cat. No. 5COO1, 5COO2, CNC02, CNCO3.	Vial: 3.5 ml, 100 ml	3/1/88
Diagnostic Products Corporation.	Low and High Cannabinoid Urinary Controls: Cat. No. 5TCO1, 5TCO2.	Vial: 100 ml	3/1/88
Diagnostic Products Corporation.	Low and High Morphine Urinary Controls: Cat. No. 5MCO1, 5MCO2.	Vial: 100 ml	3/1/88
Diagnostic Products Corporation.	Low and High Opiate Urinary Controls: Cat. No. 5OCO1, 5OCO2.	Vial: 100 ml	3/1/88
Diagnostic Products Corporation.	Low and High PCP Urinary Controls: Cat. No. 5PCO1, 5PCO2.	Vial: 100 ml	3/1/88
Diagnostic Products Corporation.	Methadone Calibrators: Cat. No. MDC4–8	Vial: 3.5 ml	3/1/88
Diagnostic Products Corporation.	Methamphetamine Calibrators Cat. No. MMA–8	Vial: 5ml	9/28/90
Diagnostic Products Corporation.	Methamphetamine Cartridges Cat. No. VMADC	Cartridge: 5ml	1/25/91
Diagnostic Products Corporation.	Methamphetamine Positive Reference Cat. No. VMAPC	Vial: 3ml	1/25/91

EXEMPT CHEMICAL PREPARATIONS—Continued

Supplier	Product name	Form	Date
Diagnostic Products Corporation.	Methaqualone Calibrators: Cat. No. MQC4–8	Vial: 3.5 ml	3/1/88
Diagnostic Products Corporation.	Mid-Molecule PTH Antiserum: Cat. No. PMD1	Vial: 10 ml	3/1/88
Diagnostic Products Corporation.	Milenia Amphetamine Cat. No. MKAP1, MKAP5	Kit: 7 vials, 96 tests, 480 tests	7/5/90
Diagnostic Products Corporation.	Milenia Cannabinoids Cat. No. MK TH1, MKTH5	Kit: 6 vials, 96 Tests, 480 Tests.	7/5/90
Diagnostic Products Corporation.	Milenia Cocaine Metabolite Cat. No. MKCC1, MKCC5	Kit: 96 Tests, 480 Tests	1/25/91
Diagnostic Products Corporation.	Milenia Cocaine References and Controls Cat. No. MC3, 6; MCCC1, 2.	Glass Vial: 5ml	1/25/91
Diagnostic Products Corporation.	Milenia Methamphetamine Cat. No. MKMA1, MKMA5	Kit: 96 wells, 480 wells	9/28/90
Diagnostic Products Corporation.	Milenia Opiates Cat. No. MKOP1, MKOP5	Kit: 6 vials, 96 Tests, 480 Tests.	7/5/90
Diagnostic Products Corporation.	Milenia PCP Cat. No. MKPC1, MKPC5	Kit: 6 vials, 96 tests, 480 tests	7/5/90
Diagnostic Products Corporation.	Morphine Calibrators: Cat. No. MPC4–8	Vial: 3.5 ml, 10 ml	3/1/88
Diagnostic Products Corporation.	Morphine Reference Preparation: Cat. No. 5YMPY7	Vial: 120 ml	3/1/88
Diagnostic Products Corporation.	Opiate Calibrators: Cat. No. OSC4–8	Vial: 3.5 ml	3/1/88
Diagnostic Products Corporation.	Opiate Cartridges Cat. No. VOSDC	Cartridge: 5ml	7/5/90
Diagnostic Products Corporation.	Opiates Calibrators Cat. No. MOP 4–7	Vial: 5ml	7/5/90
Diagnostic Products Corporation.	Opiates Positive Reference Cat. No. VOSPC	Vial: 1ml	7/5/90
Diagnostic Products Corporation.	Opiates Reference Preparation: Cat. No. 5YOS7	Vial: 120 ml	3/1/88
Diagnostic Products Corporation.	PCP Calibrators Cat. No. MPC 3–7	Vial: 5ml	7/5/90
Diagnostic Products Corporation.	PCP Calibrators: Cat. No. PCC4–8	Vial: 3.5 ml	3/1/88
Diagnostic Products Corporation.	PCP Reference Preparation: Cat. No. 5YPC6	Vial: 120 ml	3/1/88
Diagnostic Products Corporation.	PTH (C-Terminal) Isotope: Cat. No. PCD2	Vial: 10 ml	3/1/88
Diagnostic Products Corporation.	PTH (Ultra) Antiserum: Cat. No. PTD1	Vial: 5 ml	3/1/88
Diagnostic Products Corporation.	PTH (Ultra) Isotope: Cat. No. PTD2	Vial 5 ml	3/1/88
Diagnostic Products Corporation.	PTH–M Isotope: Cat. No. PMD2	Vial: 10 ml	3/1/88
Diagnostic Products Corporation.	RIA Controls Level 4, 5, 6 Cat. No. CON4, CON5, CON6	Vial: 10ml	3/25/91
Diagnostic Products Corporation.	Serum Morphine Calibrators: Cat. No. SMC4–8	Vial: 3.5 ml	3/1/88
Diagnostic Products Corporation.	Serum Morphine Controls: Cat. No. SMCO2, SMCO3	Vail: 3.5 ml	3/1/88
Diagnostic Products Corporation.	THC Calibrators B–F: Cat. No. THD4–8	Vial: 3.5 ml	3/1/88
Diagnostic Products Corporation.	THC Calibrators Cat. No. MTH 4–7	Vial: 5ml	7/5/90
Diagnostic Products Corporation.	THC Reference Preparation: Cat. No. 5YTH7	Vial: 120 ml	3/1/88
Diagnostic Products Corporation.	Ten One Methamphetamine Cat. No. VKMA1, VKMA4	Kit: 12 Tests, 48 Tests	1/25/91
Diagnostic Products Corporation.	Ten One Opiates Cat. No. VKSO1, VKSO4	Kit: 1 vial, 12 & 48 5ml cartridges.	7/5/90
Diagnostic Products Corporation.	Testosterone Calibrators Cat. No. TTD3–8	Vial: 3.5ml	3/25/91
Diagnostic Products Corporation.	Total Testosterone Calibrators Cat. No. TTC4–8	Vial: 3.5ml	3/25/91
Diagnostic Products Corporation.	Triiodothyronine (T3) Isotope: Cat. No. TT32	Vial: 120 ml	3/1/88
Diagnostic Products Corporation.	[125I] Free Testosterone Cat. No. TTF2	Vial: 105ml	3/25/91
Diagnostic Products Corporation.	[125I] Testosterone Cat. No. TTD2	Vial: 10ml	3/25/91

EXEMPT CHEMICAL PREPARATIONS—Continued

Supplier	Product name	Form	Date
Diagnostic Products Corporation.	[125I] Total Testosterone Cat. No. TTT 2	Vial: 105ml	3/25/91
Diagnostic Systems Laboratories, Inc.	Active DHT DSL 9600	Kit: 100 Tests	1/25/96
Diagnostics Reagents, Inc	Amphetamines Enzyme Conjugate Reagent, Bulk	Carboy: 20, 10, 5, 1 L	10/20/93
Diagnostics Reagents, Inc	Amphetamines Enzyme Immunoassay Kit # 0017	Kit: 2 Bottles; 100ml each	10/20/93
Diagnostics Reagents, Inc	Amphetemine Enzyme Immunoassay Kit # 0018	Kit: 2 Bottles; 500ml each	10/20/93
Diagnostics Reagents, Inc	Barbiturate Enzyme Congugate Reagent, Bulk	Carboy: 20, 10, 5, 1 L	10/20/93
Diagnostics Reagents, Inc	Barbiturate Enzyme Immunoassay Kit # 0225	Kit: 2 Bottles; 100 ml each	10/20/93
Diagnostics Reagents, Inc	Barbiturate Enzyme Immunoassay Kit # 0226	Kit: 2 Bottles; 500ml each	10/20/93
Diagnostics Reagents, Inc	Benzodiazepine Enzyme Conjugate Reagent, Bulk	Carboy: 20, 10, 5, 1 L	10/20/93
Diagnostics Reagents, Inc	Benzodiazepine Enzyme Immunoassay Kit # 0039	Kit: 2 Bottles; 100ml each	10/20/93
Diagnostics Reagents, Inc	Benzodiazepine Enzyme Immunoassay Kit # 0040	Kit: 2 Bottles; 500ml each	10/20/93
Diagnostics Reagents, Inc	Caanbinoid Enzyme Immunoassay Kit # 0186	Kit: 2 Bottles; 500ml each	10/20/93
Diagnostics Reagents, Inc	Cannabinoid Enzyme Conjugate Reagent, Bulk	Carboy: 20, 10, 5, 1 L	10/20/93
Diagnostics Reagents, Inc	Cannabinoid Enzyme Immunoassay Kit # 0185	Kit: 2 Bottles; 100ml each	10/20/93
Diagnostics Reagents, Inc	Cocaine Metabolite Enzyme Conjugate Reagent, Bulk	Carboy: 20, 10, 5, 1 L	10/20/93
Diagnostics Reagents, Inc	Cocaine Metabolite Enzyme Immunoassay Kit # 0055	Kit: 2 Bottles; 100ml each	10/20/93
Diagnostics Reagents, Inc	Cocaine Metabolite Enzyme Immunoassay Kit # 0056	Kit: 2 Bottles; 500ml each	10/20/93
Diagnostics Reagents, Inc	Drugs of Abuse High Calibrator A, Bulk	Bottle: 5L, 1L, 500ml	10/20/93
Diagnostics Reagents, Inc	Drugs of Abuse High Calibrator A, Cat # 0324	Bottle: 5ml	10/20/93
Diagnostics Reagents, Inc	Drugs of Abuse High Calibrator, Bulk	Bottle: 5L, 1L, 500ml	10/20/93
Diagnostics Reagents, Inc	Drugs of Abuse High Calibrator, Cat # 0036	Bottle: 5ml	10/20/93
Diagnostics Reagents, Inc	Drugs of Abuse Level 2 Control, Bulk	Bottle: 5L, 1L, 500ml	10/20/93
Diagnostics Reagents, Inc	Drugs of Abuse Level 2 Control, Cat # 0208	Bottle: 5ml	10/20/93
Diagnostics Reagents, Inc	Drugs of Abuse Level 2A Control, Bulk	Bottle: 5L, 1L, 500ml	10/20/93
Diagnostics Reagents, Inc	Drugs of Abuse Level 2A Control, Cat # 0331	Bottle: 5ml	10/20/93
Diagnostics Reagents, Inc	Drugs of Abuse Level I Control, Bulk	Bottle: 5L, 1L, 500ml	10/20/93
Diagnostics Reagents, Inc	Drugs of Abuse Level I Control, Cat # 0210	Bottle: 5ml	10/20/93
Diagnostics Reagents, Inc	Drugs of Abuse Level IA Control, Bulk	Bottle: 5L, 1L, 500ml	10/20/93
Diagnostics Reagents, Inc	Drugs of Abuse Level IA Control, Cat # 0329	Bottle: 5ml	10/20/93
Diagnostics Reagents, Inc	Drugs of Abuse Low Calibrator A, Cat # 0322	Bottle: 5ml	10/20/93
Diagnostics Reagents, Inc	Drugs of Abuse Low Calibrator, Bulk	Bottle: 5L, 1L, 500ml	10/20/93
Diagnostics Reagents, Inc	Drugs of Abuse Low Calibrator, Bulk	Bottle: 5L, 1L, 500ml	10/20/93
Diagnostics Reagents, Inc	Drugs of Abuse Low Calibrator, Cat # 0034	Bottle: 5ml	10/20/93
Diagnostics Reagents, Inc	Methadone Enzyme Conjugate Reagent, Bulk	Carboy: 20, 10, 5, 1 L	10/20/93
Diagnostics Reagents, Inc	Methadone Enzyme Immunoassay Kit # 0596	Kit: 2 Bottles; 100ml each	10/20/93
Diagnostics Reagents, Inc	Methadone Enzyme Immunoassay Kit # 0597	Kit: 2 Bottles; 500ml each	10/20/93
Diagnostics Reagents, Inc	Methadone Metabolite Enzyme Conjugate Reagent, Bulk	Carboy: 20, 10, 5, 1 L	10/20/93
Diagnostics Reagents, Inc	Methadone Metabolite Enzyme Immunoassay Kit # 0200	Kit: 2 Bottles; 100ml each	10/20/93
Diagnostics Reagents, Inc	Methadone Metabolite Enzyme Immunoassay Kit # 0201	Kit: 2 Bottles; 500ml each	10/20/93
Diagnostics Reagents, Inc	Methaqualone Enzyme Conjugate Reagent, Bulk	Carboy: 20, 10, 5, 1 L	10/20/93
Diagnostics Reagents, Inc	Methaqualone Enzyme Immunoassay Kit # 0514	Kit: 2 Bottles; 100ml each	10/20/93
Diagnostics Reagents, Inc	Methaqualone Enzyme Immunoassay Kit # 0515	Kit: 2 Bottles; 500ml each	10/20/93
Diagnostics Reagents, Inc	Opiate Enzyme Conjugate Reagent, Bulk	Carboy: 20, 10, 5, 1 L	10/20/93
Diagnostics Reagents, Inc	Opiate Enzyme Immunoassay Kit # 0135	Kit: 2 Bottles; 100ml each	10/20/93
Diagnostics Reagents, Inc	Opiate Enzyme Immunoassay Kit # 0136	Kit: 2 Bottles; 500ml each	10/20/93
Diagnostics Reagents, Inc	Phencyclidine Enzyme Conjugate Reagent, Bulk	Carboy: 20, 10, 5, 1 L	10/20/93
Diagnostics Reagents, Inc	Phencyclidine Enzyme Immunoassay Kit # 0160	Kit: 2 Bottles; 100ml each	10/20/93
Diagnostics Reagents, Inc	Phencyclidine Enzyme Immunoassay Kit # 0161	Kit: 2 Bottles; 500ml each	10/20/93
Diagnostics Reagents, Inc	Propoxyphene Enzyme Conjugate Reagent, Bulk	Carboy: 20, 10, 5, 1 L	10/20/93
Diagnostics Reagents, Inc	Propoxyphene Enzyme Immunoassay Kit # 0432	Kit: 2 Bottles; 100 ml each	10/20/93
Diagnostics Reagents, Inc	Propoxyphene Enzyme Immunoassay Kit # 0433	Kit: 2 Bottles; 500ml each	10/20/93
Diagnostics Reagents, Inc	THC Urine Calibrator 100ng/ml, Bulk	Bottle: 5L, 1L, 500ml	10/20/93
Diagnostics Reagents, Inc	THC Urine Calibrator 100ng/ml, Cat # 0044	Bottle: 5ml	10/20/93
Diagnostics Reagents, Inc	THC Urine Calibrator 200ng/ml Cat # 0206	Bottle: 5ml	10/20/93
Diagnostics Reagents, Inc	THC Urine Calibrator 200ng/ml, Bulk	Bottle: 5L, 1L, 500ml	10/20/93
Diagnostics Reagents, Inc	THC Urine Calibrator 50ng/ml	Bottle: 5ml	10/20/93
Diagnostics Reagents, Inc	THC Urine Calibrator 50ng/ml, Bulk	Bottle: 5L, 1L, 500ml	10/20/93
Diagnostics Reagents, Inc	THC Urine Calibrator, 20ng/ml, Cat # 0235	Bottle: 5ml	10/20/93
Diagnostics Reagents, Inc	THC Urine Control 125ng/ml, Bulk	Bottle: 5L, 1L, 500ml	10/20/93
Diagnostics Reagents, Inc	THC Urine Control 40ng/ml, Bulk	Bottle: 5L, 1L, 500ml	10/20/93
Diagnostics Reagents, Inc	THC Urine Control 60ng/ml, Bulk	Bottle: 5L, 1L, 500ml	10/20/93
Diagnostics Reagents, Inc	THC Urine Control 75ng/ml, Bulk	Bottle: 5L, 1L, 500ml	10/20/93
Diagnostics Reagents, Inc	THC Urine Control, 125ng/ml, Cat # 0212	Bottle: 5ml	10/20/93
Diagnostics Reagents, Inc	THC Urine Control, 40ng/ml, Cat # 0170	Bottle: 5ml	10/20/93
Diagnostics Reagents, Inc	THC Urine Control, 60ng/ml, Cat # 0168	Bottle: 5ml	10/20/93
Diagnostics Reagents, Inc	THC Urine Control, 75ng/ml, Cat # 0214	Bottle: 5ml	10/20/93
Diagnostics Reagents, Inc	THC urine Calibrator 20ng/ml, Bulk	Bottle: 5L, 1L, 500ml	10/20/93
Diagnostics Systems Laboratories Inc.	DHEA Standards, A-F, DSL 8901-8906	Vial: 3.5ml	10/08/93
Diagnostics Systems Laboratories Inc.	Radioimmunoassay Kit for the Measurement of Dehydroepiandrosterone (DHEA), DSL 8900.	Kit: 100 Tests	10/08/93

EXEMPT CHEMICAL PREPARATIONS—Continued

Supplier	Product name	Form	Date
Diagnostics Systems Laboratories Inc.	Radioimmunoassay Kit for the Measurement of Dehydroepiandrosterone (DHEA), DSL 9000.	Kit; 100 Tests	10/08/93
Diagnostics Systems Laboratories Inc.	Radioimmunoassay Kit for the Quantitative Measurement of Testosterone, DSL 4000.	Kit: 100 Tests	10/08/93
Diagnostics Systems Laboratories Inc.	Radioimmunoassay Kit for the Quantitative Measurement of Testosterone, DSL 4100.	Kit: 100 Tests	10/08/93
Diagnostics Systems Laboratories Inc.	Testosterone Controls I and II, DSL 4051 & 4052	Vial: 3.5ml	10/08/93
Diagnostics Systems Laboratories Inc.	Testosterone Standards A-F, DSL 4001-4006	Vial: 3.5ml	10/08/93
Diamedix Corporation	Barbital-Acetate Buffer, Powder 709-317	Package: 20 envelopes–10.65 g. per envelope.	7/27/72
Diamedix Corporation	CEP Plate-Amebiasis Testing 40 Test No. 730–274	Plate: 40mm x 80mm x 2.5mm	8/9/73
Diamedix Corporation	CEP VI No. 709–339	Plate: 40mm x 80mm x 2.5mm	8/9/73
Diamedix Corporation	Counterelectrophoresis (CEP) Plates for Trichinosis Testing	Plastic plates: 40mm x 80mm x 2.5mm.	6/16/75
Diamedix Corporation	EDTA (0.014M)-GVB Buffer, 753–034	Bottle: 5ml	8/9/73
Diamedix Corporation	EDTA (0.01M)-GVB Buffer, 753–031	Bottle: 5ml	8/9/73
Diamedix Corporation	GVB(3+) Buffer 753-037	Bottle: 50ml	8/9/73
Diamedix Corporation	Glucose-GVB 1 Buffer, 753–036	Bottle: 50ml	8/9/73
DuPont Medical Products	DuPont aca Urine Drugs of Abuse Control (Negative/Positive)	Carton: 10 Vials; 6ml/vial	5/25/95
Duo Research, Inc	Drug Testing Assessment Program Quality Control Samples	Kit: 25 bottles	12/26/86
Duo Research, Inc	Drug Testing Assessment Program-Quality Control Sample	Bottle: 65ml	2/27/86
Duo Research, Inc	Drug Testing Assessment Program-Quality Control Sample Kit	Kit: 5-65ml bottles	2/27/86
DynaGen, Inc	Benzoylecgonine and delta-8 THC-Carboxylic Acid Cat # 700-111.	Plastic Bottle: 100ml	7/27/93
DynaGen, Inc	D-Amphetamine and DL-Methamphetamine Cat # 700-107	Plastic Bottle: 100ml	7/27/93
DynaGen, Inc	D-Amphetamine, D-Methamphetamine and delta-9 THC-Carboxylic Acid Cat # 700-112.	Plastic Bottle: 100ml	7/27/93
DynaGen, Inc	D-Amphetamine, Pseudoephedrine, DL-Methamphetamine and Phenylpropanolamine Cat # 700-116.	Plastic Bottle: 100ml	7/27/93
DynaGen, Inc	DL-Methamphetamine Cat # 700-110	Plastic Bottle: 100ml	7/27/93
DynaGen, Inc	Hydrocodone Cat # 700-106	Plastic bottle: 100ml	7/27/93
DynaGen, Inc	Hydromorphone Cat # 700-108	Plastic Bottle: 100ml	7/27/93
DynaGen, Inc	Methadone Cat # 700-118	Plastic Bottle: 100ml	7/27/93
DynaGen, Inc	Methaqualone Cat # 700-119	Plastic Bottle: 100ml	7/27/93
DynaGen, Inc	Morphine, Codeine and 6-Monoacetylmorphine Cat # 700-114	Plastic Bottle: 100ml	7/27/93
DynaGen, Inc	Oxazepam Cat # 700-120	Plastic Bottle: 100ml	7/27/93
DynaGen, Inc	PeoCheck Blind Performance Specimens Cat # 500-100	Kit: 25 Bottles; 100ml plastic	7/27/93
DynaGen, Inc	Phencyclidine and Hydrocodone Cat # 700-115	Plastic Bottle: 100ml	7/27/93
DynaGen, Inc	ProCheck Blind Performance Specimens Cat # 500-200	Kit: 5 bottles; 100ml plastic	7/27/93
DynaGen, Inc	Propoxyphene Cat # 700-121	Plastic Bottle: 100ml	7/27/93
DynaGen, Inc	Secobarbital Cat # 700-117	Plastic Bottle: 100ml	7/27/93
DynaGen, Inc	delta 9 THC-Carboxylic Acid and Phentermine Cat # 700-113	Plastic Bottle: 100ml	7/27/93
E.I. duPont de Nemours & Co., Inc.	(1) PREP Sample Preparation and Analysis Kit	Kit containing following:	9/25/78
E.I. duPont de Nemours & Co., Inc.	(2) PREP Buffer/Internal Standard and Liquid Chromatography Verifier.	Box containing following:	9/25/78
E.I. duPont de Nemours & Co., Inc.	(2a) PREP Liquid Chromatography Verifier	Vial: 10ml (1 vial/box)	9/25/78
E.I. duPont de Nemours & Co., Inc.	(2b) PREP Buffer/Internal Standard	Vial: 100ml (3 vials/box)	9/25/78
E.I. duPont de Nemours & Co., Inc.	(3) PREP Calibrators	Box containing following:	9/25/78
E.I. duPont de Nemours & Co., Inc.	(3a) PREP Calibrator-Level 1	Vial: 10ml (1 vial/box)	9/25/78
E.I. duPont de Nemours & Co., Inc.	(3b) PREP Calibrator-Level 2	Vial: 10ml (1 vial/box)	9/25/78
E.I. duPont de Nemours & Co., Inc.	(3c) PREP Calibrator-Level 3	Vial: 10ml (1 vial/box)	9/25/78
E.I. duPont de Nemours & Co., Inc.	(3d) PREP Calibrator-Level 4	Vial: 10ml (1 vial/box)	9/25/78
E.I. duPont de Nemours & Co., Inc.	(4) PREP Controls	Box containing following:	9/25/78
E.I. duPont de Nemours & Co., Inc.	(4a) PREP Control-Low Level	Vial: 10ml (2 vials/box)	9/25/78
E.I. duPont de Nemours & Co., Inc.	(4b) PREP Control-High Level	Vial: 10ml (2 vials/box)	9/25/78
E.I. duPont de Nemours & Co., Inc.	Cocaine [N-Methyl-3H]	Vial: 1 or 5ml	10/4/95
E.I. duPont de Nemours & Co., Inc.	DM/TU Saturating Reagent	Plastic Bottle: 1L, 10L, 20L	2/22/89

EXEMPT CHEMICAL PREPARATIONS—Continued

Supplier	Product name	Form	Date
E.I. duPont de Nemours & Co., Inc.	DuPont Drug Calibrator–A (levels 1–5)	Vial: 6ml, Box: 10 vials	9/28/90
E.I. duPont de Nemours & Co., Inc.	DuPont Drug Calibrators– Levels 1 through 5	Vial: 6ml (1 vial and 2 vials/box).	4/4/86
E.I. duPont de Nemours & Co., Inc.	DuPont Phenobarbital Assay	Vial: 6 ml	10/13/86
E.I. duPont de Nemours & Co., Inc.	DuPont U Amp Enzyme Pack Reagent	Bottle: 1 liter	10/19/87
E.I. duPont de Nemours & Co., Inc.	DuPont U Barb Enzyme Pack Reagent	Bottle: 1 liter	10/19/87
E.I. duPont de Nemours & Co., Inc.	DuPont U Benz Enzyme Pack Reagent	Bottle: 1 liter	10/19/87
E.I. duPont de Nemours & Co., Inc.	DuPont U COC Enzyme Pack Reagent	Bottle: 1 liter	10/19/87
E.I. duPont de Nemours & Co., Inc.	DuPont U OPI Enzyme Pack Reagent	Bottle: 1 liter	8/28/87
E.I. duPont de Nemours & Co., Inc.	DuPont U THC Enzyme Pack Reagent	Bottle: 1 Liter	1/4/88
E.I. duPont de Nemours & Co., Inc.	DuPont Urine Drugs-of-Abuse Calibrator (Levels 0, 1, 2)	Box: 6 Vials, 6ml Vial	7/27/87
E.I. duPont de Nemours & Co., Inc.	DuPont Urine Drugs-of-Abuse Control	Vial: 6ml	8/3/87
E.I. duPont de Nemours & Co., Inc.	DuPont aca Barbiturate Screen Analytical Test Pack	Plastic Packs: 25 tests	12/23/84
E.I. duPont de Nemours & Co., Inc.	DuPont aca Barbiturate Screen/Benzodiazepine Screen Calibrator.	6 Vials: 3ml	2/23/84
E.I. duPont de Nemours & Co., Inc.	DuPont aca Benzodiazepine Screen Analytical Test Pack	Plastic Packs: 25 tests	2/23/84
E.I. duPont de Nemours & Co., Inc.	Phenobarbital Calibrator-Level 1	Vial: 6ml (1 vial/box)	4/2/86
E.I. duPont de Nemours & Co., Inc.	Phenobarbital Calibrator-Level 2	Vial: 6ml (1 vial/box)	4/2/86
E.I. duPont de Nemours & Co., Inc.	Phenobarbital Calibrator-Level 3	Vial: 6ml (1 vial/box)	4/2/86
E.I. duPont de Nemours & Co., Inc.	Phenobarbital Calibrator-Level 4	Vial: 6ml (1 vial/box)	4/2/86
E.I. duPont de Nemours & Co., Inc.	Phenobarbital Calibrator-Level 5	Vial: 6ml (1 vial/box)	4/2/86
E.I. duPont de Nemours & Co., Inc.	Theophylline Calibrator Levels 1, 2 and 3	Vial: 6ml. Box contains 2 vials each level.	9/21/88
E.I. duPont de Nemours & Co., Inc.	Thyroid Rotor	Foil Pouch: 1 Rotor Shelf Carton: 10 Rotors Box: 5 Shelf Cartons (50 Rotors).	10/25/88
E.I. duPont de Nemours & Co., Inc.	Thyronine (TU) Uptake Flex	32 Test Cartridge, Carton: 7 cartridges.	3/29/89
E.I. duPont de Nemours & Co., Inc.	Thyronine (TU) Uptake Flex(tm) Reagent Cartridge	Plastic container: 2.3ml (20 tests).	4/28/86
E.I. duPont de Nemours & Co., Inc.	Urine Amphetamine (U Amp) Test Pack	Carton: 50 tests	8/27/87
E.I. duPont de Nemours & Co., Inc.	Urine Barbiturate (U Barb) Test Pack	Carton: 50 tests	8/27/87
E.I. duPont de Nemours & Co., Inc.	Urine Benzodiazepine (U Benz) Test Pack	Carton: 50 tests	8/27/87
E.I. duPont de Nemours & Co., Inc.	Urine Cannabinoid (U THC) Test Pack	Carton: 50 tests	11/9/87
E.I. duPont de Nemours & Co., Inc.	Urine Cocaine (U COC) Test Pack	Carton: 50 tests	8/27/87
E.I. duPont de Nemours & Co., Inc.	Urine Opiate (U OPI) Test Pack	Carton: 50 tests	7/8/87
E.I. duPont de Nemours & Co., Inc.	aca PHNO Analytical Test Pack	Carton: 40 tests packs	8/25/77
E.I. duPont de Nemours & Co., Inc.	aca Thryonine Uptake Analytical Test Pack	Plastic Pack: 1 test	8/25/83
E.I. duPont de Nemours & Co., Inc.	aca Urine Methadone Calibrator (Level 1 & 2)	Vial: 10ml	9/17/93
E.I. duPont de Nemours & Co., Inc.	aca Urine Methadone Control (Negative/Positive)	Vial: 6ml	9/17/93
E.I. duPont de Nemours & Co., Inc., Medical Products.	5-Cyclohexenyl-3,5,-Dimethyl barbituric Acid (3H(G)), Catalog No. NET–426.	Combi-Vial: 250 microcuries, 1 millicurie, and 5 millicuries.	1/4/77
E.I. duPont de Nemours & Co., Inc., Medical Products.	Acetaldehyde (1, 2-14C) as Paraldehyde, Catalog No. NEC–158.	Pyrex Glass Breakseal Tube: 250 microcuries, 1 millicurie.	1/4/77

EXEMPT CHEMICAL PREPARATIONS—Continued

Supplier	Product name	Form	Date
E.I. duPont de Nemours & Co., Inc., Medical Products.	Cocaine, Levo-[Benzoyl] [3.4–3H(N)] Catalog No. NET–510	Combi-Vial: 100 microcuries, 250 microcuries.	1/4/77
E.I. duPont de Nemours & Co., Inc., Medical Products.	Diazepam [Methyl-3H] Catalog No. NET–564	Combi-Vial: 0.250 millicuries, 1.0 millicurie.	9/6/79
E.I. duPont de Nemours & Co., Inc., Medical Products.	Dihydromorphine [7, 8–3H(N)]	Combi-Vial: 250 microcuries, 1 millicurie.	1/4/77
E.I. duPont de Nemours & Co., Inc., Medical Products.	Dihydromorphine [N-Methyl-3H] NET–658	Combi-Vial: 0.250 millicuries, 1.0 millicurie.	2/29/80
E.I. duPont de Nemours & Co., Inc., Medical Products.	Dihydrotestosterone, [1, 2, 4, 5, 6, 7, 16, 17–3H(N)]	NENSURE Vial: 0.8ml, 6.2ml	11/1/91
E.I. duPont de Nemours & Co., Inc., Medical Products.	Dihydrotestosterone, [1, 2, 4, 5, 6, 7–3H(N)]-	NENSURE Vial: 0.8ml, 6.2ml	11/1/91
E.I. duPont de Nemours & Co., Inc., Medical Products.	Dihydrotestosterone, [1, 2-3H(N)]	NENSURE Vial: 0.8ml, 6.2ml	11/1/91
E.I. duPont de Nemours & Co., Inc., Medical Products.	Dihydrotestosterone, [4-14C]-	NENSURE Vial: 0.8ml, 6.2ml	11/1/91
E.I. duPont de Nemours & Co., Inc., Medical Products.	Drug Discovery Kit, No. NED–002, NED–002A	Kit: 100 tests, 500 tests	8/8/89
E.I. duPont de Nemours & Co., Inc., Medical Products.	Drugs of Abuse Controls	Bottle: 5ml	1/11/95
E.I. duPont de Nemours & Co., Inc., Medical Products.	Flunitrazepam (Methyl-3H)	Combi-Vial: 5 microcuries, 14 microcuries.	8/8/89
E.I. duPont de Nemours & Co., Inc., Medical Products.	Flunitrazepam 2.5 Micro M	Combi-Vial: 2.0 ml	8/8/89
E.I. duPont de Nemours & Co., Inc., Medical Products.	Flunitrazepam [Methyl-3H] NET 567	Combi-Vial: 0.250 millicuries, 1.0 millicurie.	4/29/87
E.I. duPont de Nemours & Co., Inc., Medical Products.	LSD [N-Methyl-3H] NET-638	Combi-Vial: 0.250 millicuries, 1.0 millicurie.	11/6/79
E.I. duPont de Nemours & Co., Inc., Medical Products.	Mazindol (4′-3H) Catalog No.NET-816	Combi-Vial: 0.250 millicuries, 1.0 millicurie.	5/17/84
E.I. duPont de Nemours & Co., Inc., Medical Products.	Methylenedioxymethamphetamine, (+)3,4-[N-methyl-3H] NET 957.	Combi-Vial: 0.0250 millicuries, 0.25 millicuries, 1.0 millicuries.	8/25/75
E.I. duPont de Nemours & Co., Inc., Medical Products.	Methylphenidate, +/− threo[methyl-3H]NET-857	Combi-Vial: 0.250 millicuries, 1.0 millicurie.	6/11/84
E.I. duPont de Nemours & Co., Inc., Medical Products.	Mibolerone	Glass Vial: 5ml	11/1/91
E.I. duPont de Nemours & Co., Inc., Medical Products.	Mibolerone, [17Alpha-methyl-3H]-	NENSURE Vial: 0.8ml, 6.2ml	11/1/91
E.I. duPont de Nemours & Co., Inc., Medical Products.	Morphine [N-methyl-3H] NET-653	Combi-Vial: 0.250 millicuries, 1.0 millicurie.	2/29/80
E.I. duPont de Nemours & Co., Inc., Medical Products.	N-[1-(2-Thienyl) Cyclohexyl]-3, 4-Piperidine (Piperidyl-3,4-3H)NET-886.	Combi-Vial: 0.250 millicuries, 1.0 millicurie.	6/11/84
E.I. duPont de Nemours & Co., Inc., Medical Products.	Phencyclidine [Piperidyl-3,4-3H(N)], Catalog No.NET-630	Combi-Vial: 0.250 millicurie, 1.0 millicurie.	9/6/79
E.I. duPont de Nemours & Co., Inc., Medical Products.	Phenobarbital (PHNO) Flex Reagent Cartridge	Cartridge: Plastic	5/26/94
E.I. duPont de Nemours & Co., Inc., Medical Products.	Testosterone, [1,2,6,7,16,17-3H(N)]	NENSURE Vial: 0.8ml, 6.2ml	11/1/91
E.I. duPont de Nemours & Co., Inc., Medical Products.	Testosterone, [1,2,6,7-3H(N)]-	NENSURE Vial: 0.8ml, 6.2ml	11/1/91
E.I. duPont de Nemours & Co., Inc., Medical Products.	Testosterone, [1Alpha, 2Alpha, -3H(N)]-	NENSURE Vial: 0.8ml, 6.2ml	11/1/91
E.I. duPont de Nemours & Co., Inc., Medical Products.	Testosterone, [1Beta, 2Beta,-3H(N)]-	NENSURE Vial: 0.8ml, 6.2ml	11/1/91
E.I. duPont de Nemours & Co., Inc., Medical Products.	Testosterone, [4-14C]-	NENSURE Vial: 0.8ml, 6.2ml; Glass Vial: 10ml.	11/1/91
E.I. duPont de Nemours & Co., Inc., Medical Products.	Testosterone, [7-3H(N)]-	NENSURE Vial: 0.8ml, 6.2ml	11/1/91
E.I. duPont de Nemours & Co., Inc., Medical Products.	Urine Cannabinoids Screen (UTHC) Flex Reagent Cartridge	Cartridge: Plastic	4/19/94
E.I. duPont de Nemours & Co., Inc., Medical Products.	Urine Cocaine Metabolites Screen (UCOC) Flex Reagent Cartridge.	Cartridge: Plastic	4/19/94
E.I. duPont de Nemours & Co., Inc., Medical Products.	Urine Opiates Screen (UOPI) Flex Reagent Cartridge	Cartridge: Plastic	4/19/94
E.I. duPont de Nemours & Co., Inc., Medical Products.	d-Amphetamine Sulfate (3H(G)), Catalog No. NET–140	Combi-Vial: 250 microcuries, 1 millicurie, and 5 millicuries.	1/4/77
EDITEK Inc	EZ-SCREEN Amphetamines Bulk Conjugate	Bottle: 250ml	8/17/94
EDITEK Inc	EZ-SCREEN Amphetamines Bulk Positive Control	Bottle: 4L	8/17/94
EDITEK Inc	EZ-SCREEN Amphetamines Positive Control Stock	Flask: 100ml	8/17/94
EDITEK Inc	EZ-SCREEN Amphetamines QC Standard	Tube: 50ml	8/17/94
EDITEK Inc	EZ-SCREEN Barbiturates Bulk Conjugate	Tube: 50ml	8/17/94

EXEMPT CHEMICAL PREPARATIONS—Continued

Supplier	Product name	Form	Date
EDITEK Inc	EZ-SCREEN Barbiturates Bulk Positive Control	Bottle: 8L	8/17/94
EDITEK Inc	EZ-SCREEN Barbiturates Positive Control Stock	Flask: 100ml	8/17/94
EDITEK Inc	EZ-SCREEN Barbiturates QC Standard	Tube: 50ml	8/17/94
EDITEK Inc	EZ-SCREEN CANNABINOID/COCAINE 0.5ml Positive Control.	Tube: 2.2ml	8/17/94
EDITEK Inc	EZ-SCREEN CANNABINOID/COCAINE 5.0ml Positive Control.	Bottle: 15ml	8/17/94
EDITEK Inc	EZ-SCREEN CANNABINOID/COCAINE/OPIATES Bulk Positive Control.	Bottle: 20L	8/17/94
EDITEK Inc	EZ-SCREEN COCAINE Bulk Conjugate	Bottle: 250ml	8/17/94
EDITEK Inc	EZ-SCREEN COCAINE Bulk Positive Control	Bottle: 8L	8/17/94
EDITEK Inc	EZ-SCREEN COCAINE Positive Control	Flask: 100ml	8/17/94
EDITEK Inc	EZ-SCREEN COCAINE QC Standard	Tube: 50ml	8/17/94
EDITEK Inc	EZ-SCREEN OPIATES Bulk Conjugate	Tube: 50ml	8/17/94
EDITEK Inc	EZ-SCREEN OPIATES Bulk Positive Control	Bottle: 4L	8/17/94
EDITEK Inc	EZ-SCREEN OPIATES Positive Control Stock	Flask: 100ml	8/17/94
EDITEK Inc	EZ-SCREEN OPIATES QC Standard	Tube: 50ml	8/17/94
EDITEK Inc	EZ-SCREEN PCP Bulk Conjugate	Tube: 50ml	8/17/94
EDITEK Inc	EZ-SCREEN PCP Bulk Positive Control	Bottle: 2L	8/17/94
EDITEK Inc	EZ-SCREEN PCP Positive Control Stock	Flask: 100ml	8/17/94
EDITEK Inc	EZ-SCREEN PCP QC Standard	Tube: 50ml	8/17/94
EDITEK Inc	EZ-SCREEN THC Bulk Conjugate	Tube: 50ml	8/17/94
EDITEK Inc	EZ-SCREEN THC Bulk Positive Control	Bottle: 8L	8/17/94
EDITEK Inc	EZ-SCREEN THC Positive Control Stock	Flask: 10ml	8/17/94
EDITEK Inc	EZ-SCREEN THC QC Standard	Tube: 50ml	8/17/94
EDITEK Inc	EZ-SCREEN: Amphetamines 0.5ml Positive Control	Tube: 2.2ml	8/17/94
EDITEK Inc	EZ-SCREEN: Amphetamines 20-Test Bulk Kit	Kit: 20 Tests	8/17/94
EDITEK Inc	EZ-SCREEN: Amphetamines 20-Test Pack	Kit: 20 Tests	8/17/94
EDITEK Inc	EZ-SCREEN: Amphetamines 5.0ml Positive Control	Bottle: 15ml	8/17/94
EDITEK Inc	EZ-SCREEN: Amphetamines Enzyme Conjugate	Ampule: 0.8ml	8/17/94
EDITEK Inc	EZ-SCREEN: Amphetamines Test Kit	Kit: 1 Test	8/17/94
EDITEK Inc	EZ-SCREEN: Barbiturates 0.5ml Positive Control	Tube: 2.2ml	8/17/94
EDITEK Inc	EZ-SCREEN: Barbiturates 20-Test Bulk Kit	Kit: 20 Tests	8/17/94
EDITEK Inc	EZ-SCREEN: Barbiturates 20-Test Pack	Kit: 20 Tests	8/17/94
EDITEK Inc	EZ-SCREEN: Barbiturates 5.0ml Positive Control	Bottle: 15ml	8/17/94
EDITEK Inc	EZ-SCREEN: Barbiturates Enzyme Conjugate	Ampule: 0.8ml	8/17/94
EDITEK Inc	EZ-SCREEN: Barbiturates Test Kit	Kit: 1 Test	8/17/94
EDITEK Inc	EZ-SCREEN: CANNABINOID 0.5 ml Positive Control	Tube: 2.2ml	8/17/94
EDITEK Inc	EZ-SCREEN: CANNABINOID 20-Test Bulk Kit	Kit: 20 Tests	8/17/94
EDITEK Inc	EZ-SCREEN: CANNABINOID 20-Test Pack	Kit: 20 Tests	8/17/94
EDITEK Inc	EZ-SCREEN: CANNABINOID 5.0ml Positive Control	Bottle: 15ml	8/17/94
EDITEK Inc	EZ-SCREEN: CANNABINOID Enzyme Conjugate	Ampule: 0.8ml	8/17/94
EDITEK Inc	EZ-SCREEN: CANNABINOID Test Kit	Kit: 1 Test	8/17/94
EDITEK Inc	EZ-SCREEN: CANNABINOID/COCAINE 20-Test Bulk Kit	Kit: 20 Tests	8/17/94
EDITEK Inc	EZ-SCREEN: CANNABINOID/COCAINE 20-Test Pack	Kit: 20 Tests	8/17/94
EDITEK Inc	EZ-SCREEN: CANNABINOID/COCAINE Enzyme Conjugate	Ampule: 0.8ml	8/17/94
EDITEK Inc	EZ-SCREEN: CANNABINOID/COCAINE Test Kit	Kit: 1 Test	8/17/94
EDITEK Inc	EZ-SCREEN: CANNABINOID/COCAINE/OPIATES 0.5ml Positive Control.	Tube: 2.2ml	8/17/94
EDITEK Inc	EZ-SCREEN: CANNABINOID/COCAINE/OPIATES 10-Test Bulk Kit.	Kit: 10 Tests	8/17/94
EDITEK Inc	EZ-SCREEN: CANNABINOID/COCAINE/OPIATES 20-Test Kit Pack.	Kit: 20 Tests	8/17/94
EDITEK Inc	EZ-SCREEN: CANNABINOID/COCAINE/OPIATES 5.0ml Positive Control.	Bottle: 15ml	8/17/94
EDITEK Inc	EZ-SCREEN: CANNABINOID/COCAINE/OPIATES Enzyme Conjugate.	Ampule: 0.8ml	8/17/94
EDITEK Inc	EZ-SCREEN: CANNABINOID/COCAINE/OPIATES Test Kit	Kit: 1 Test	8/17/94
EDITEK Inc	EZ-SCREEN: COCAINE 0.5ml Positive Control	Tube: 2.2ml	8/17/94
EDITEK Inc	EZ-SCREEN: COCAINE 20 Test Bulk Kit	Kit: 20 Tests	8/17/94
EDITEK Inc	EZ-SCREEN: COCAINE 20-Test Pack	Kit: 20 Tests	8/17/94
EDITEK Inc	EZ-SCREEN: COCAINE 5.0ml Positive Control	Bottle: 15ml	8/17/94
EDITEK Inc	EZ-SCREEN: COCAINE Enzyme Conjugate	Ampule: 0.8ml	8/17/94
EDITEK Inc	EZ-SCREEN: COCAINE Test Kit	Kit: 1 Test	8/17/94
EDITEK Inc	EZ-SCREEN: OPIATES 0.5ml Positive Control	Tube: 2.2ml	8/17/94
EDITEK Inc	EZ-SCREEN: OPIATES 20 Test Pack	Kit: 20 Tests	8/17/94
EDITEK Inc	EZ-SCREEN: OPIATES 20-Test Bulk Kit	Kit: 20 Tests	8/17/94
EDITEK Inc	EZ-SCREEN: OPIATES 5.0ml Positive Control	Bottle: 15ml	8/17/94
EDITEK Inc	EZ-SCREEN: OPIATES Enzyme Conjugate	Ampule: 0.8ml	8/17/94
EDITEK Inc	EZ-SCREEN: OPIATES Test Kit	Kit: 1 Test	8/17/94
EDITEK Inc	EZ-SCREEN: PCP 0.5ml Positive Control	Ampule: 0.8ml	8/17/94
EDITEK Inc	EZ-SCREEN: PCP 20-Test Bulk Kit	Kit: 20 Tests	8/17/94

EXEMPT CHEMICAL PREPARATIONS—Continued

Supplier	Product name	Form	Date
EDITEK Inc	EZ-SCREEN: PCP 20-Test Kit	Kit: 20 Tests	8/17/94
EDITEK Inc	EZ-SCREEN: PCP 5.0ml Positive Control	Bottle: 15ml	8/17/94
EDITEK Inc	EZ-SCREEN: PCP Enzyme Conjugate	Ampule: 0.8ml	8/17/94
EDITEK Inc	EZ-SCREEN: PCP Test Kit	Kit: 1 Test	8/17/94
EDITEK Inc	VERDICT COCAINE One-Step Drug Test; Product # 600230	Pouch: 1 each; Box: 50 Pouches.	8/2/94
EDITEK Inc	VERDICT Cocaine Bulk Conjugate	Vial: 2ml	8/14/94
EDITEK Inc	VERDICT Cocaine Bulk Conjugate	Vial: 2ml	8/14/94
EDITEK Inc	VERDICT Cocaine QC Standard	Tube: 50ml	8/14/94
EDITEK Inc	VERDICT OPIATES One-Step Drug Test; Product # 600233	Pouch: 1 each; Box: 50 Pouches.	8/2/94
EDITEK Inc	VERDICT Opiates Bulk Conjugate	Vial: 2ml	8/14/94
EDITEK Inc	VERDICT Opiates Bulk Conjugate	Vial: 5ml	8/14/94
EDITEK Inc	VERDICT Opiates QC Standard	Tube: 15ml	8/14/94
EDITEK Inc	VERDICT PCP 50-Test Kit, Cat # 600226	Kit: 50 Tests	1/11/96
EDITEK Inc	VERDICT PCP Bulk Conjugate 0.5ml, 2.0ml	Vial: 2ml	1/11/96
EDITEK Inc	VERDICT PCP QC Standard	Tube: 50ml	1/11/96
EDITEK Inc	VERDICT THC Bulk Conjugate	Vial: 2ml	8/14/94
EDITEK Inc	VERDICT THC Bulk Conjugate	Vial: 5ml	8/14/94
EDITEK Inc	VERDICT THC One-Step Drug Test; Product # 600212	Pouch: 1 each; Box: 50 Pouches.	8/2/94
EDITEK Inc	VERDICT THC QC Standard	Tube: 50ml	8/14/94
EDITEK Inc	VERDICT THC/COCAINE One-Step Drug Test	Pouch: 2 Kits	8/14/94
EM Diagnostic Systems, Inc	EMDS Antiepileptic Drug Calibrator Item No. 67630/95	Box: 3 Vials, 5 ml each	6/11/86
EM Diagnostic Systems, Inc	EMDS Test Packs, Phenobarbital (PHENO) Item No. 67677/95.	Carton: 48 Test Packs	9/9/86
EM Diagnostic Systems, Inc	Easytest Phenobarbital Assay Item No. 67534/93	Cuvette: 1.8ml (40 cuvettes /carton).	6/11/86
Eastman Kodak Company	KODATROL Control I Control and Diluent Set	1 Set: 2 amber glass vials ea. 6 ml 1 Box: 12 sets.	7/21/88
Eastman Kodak Company	KODATROL Control II Control and Diluent Set	1 Set: 2 amber glass vials ea. 6 ml 1 Box: 12 sets.	7/21/88
Eastman Kodak Company	Kodak EKTACHEM Specialty Calibrator	Vial: 3ml	9/13/85
Eastman Kodak Company	Kodak EKTACHEM Specialty Control I	Vial: 3ml	9/13/85
Eastman Kodak Company	Kodak Ektachem Specialty Control II	Glass Vial: 6 ml	11/10/87
Electro-Nucleonics Laboratories, Incorporated.	VIRGO IPA Immuno-Precipitation Assay for Phenobarbital	Kit	11/30/82
Eli Lilly and Company	Propoxyphene Industrial Hygiene Air Monitoring Sample Cassette.	Cassette: Plastic	7/13/94
Elsohly Laboratories, Inc	(-)-11 Nor-delta-9-THC-COOH 100ug/ml	Vial: 1ml	3/26/95
Elsohly Laboratories, Inc	11-Hydroxy-delta-9-THC, 100ug/ml	Vial: 1ml	3/26/95
Elsohly Laboratories, Inc	8-Beta, 11-dihydroxy-delta-9-THC, 100ug/ml	Vial: 1ml	3/26/95
Elsohly Laboratories, Inc	8-Beta-hydroxy-delta-9-THC, 100ug/ml	Vial: 1ml	3/26/95
Elsohly Laboratories, Inc	Difluorobenzoylecgonine, 100ug/ml	Vial: 1ml	3/26/95
Elsohly Laboratories, Inc	Difluorococaine, 100ug/ml	Vial: 1ml	3/26/95
Elsohly Laboratories, Inc	Difluorophencyclidine, 100ug/ml	Vial: 1ml	3/26/95
Elsohly Laboratories, Inc	Urine Controls	Bottles: 15ml–40L	3/26/95
Elsohly Laboratories, Inc	d2-Dihydrocodeine, 100ug/ml	Vial: 1ml	3/26/95
Elsohly Laboratories, Inc	d2-Dihydromorphine, 100ug/ml	Vial: 1ml	3/26/95
Elsohly Laboratories, Inc	d3-Codeine, 100ug/ml	Vial: 1ml	3/26/95
Elsohly Laboratories, Inc	d3-Hydrocodone, 100ug/ml	Vial: 1ml	3/26/95
Elsohly Laboratories, Inc	d3-Hydromorphone, 100ug/ml	Vial: 1ml	3/26/95
Elsohly Laboratories, Inc	d3-Morphine, 100ug/ml	Vial: 1ml	3/26/95
Elsohly Laboratories, Inc	d3-Oxycodone, 100ug/ml	Vial: 1ml	3/26/95
Elsohly Laboratories, Inc	d6-11-Nor-delta-8-THC-9-COOH, 100ug/ml	Vial: 1ml	3/26/95
Elsohly Laboratories, Inc	d6-11-Nor-delta-9-THC-9-COOH, 100ug/ml	Vial: 1ml	3/26/95
Elsohly Laboratories, Inc	d6-Amphetamine, 100ug/ml	Vial: 1ml	3/26/95
Elsohly Laboratories, Inc	d6-Delta-8-THC, 100ug/ml	Vial: 1ml	3/26/95
Elsohly Laboratories, Inc	d9-Delta-9-THC, 100ug/ml	Vial: 1ml	3/26/95
Elsohly Laboratories, Inc	d9-Methamphetamine, 100ug/ml	Vial: 1ml	3/26/95
Endocrine Metabolic Center	0.1% Lysozyme-Barbital Buffer, 0.05M	Glass Bottle: 2 liter	5/28/87
Endocrine Metabolic Center	1% Lysozyme-Barbital Buffer, 0.05M	Glass Bottle: 2 liter	5/28/87
Endocrine Metabolic Center	Barbital Buffer, 0.05M	Plastic Bottle: 3000 ml	5/28/87
Endocrine Metabolic Center	Barbital Buffer, 0.1M	Plastic Bottle: 3000 ml	5/28/87
Endocrine Metabolic Center	Tracer Diluent	Glass Bottle: 1 or 2 liter	5/28/87
Environmental Diagnostics, Inc	EZ-Screen: Cannabinoid Enzyme Conjugate	Ampule: 1 ml	2/3/87
Environmental Diagnostics, Inc	EZ-Screen: Cannabinoid Kit Catalog No. 216–2BP	Kit: 1 test	2/3/87
Environmental Diagnostics, Inc	EZ-Screen: Cannabinoid Positive Control	Ampule: 1 ml	2/3/87
Environmental Diagnostics, Inc	EZ-Screen: Cannabinoid/Cocaine-Enzyme Conjugate	Polyethylene Tube: containing ampule with 1 tablet, Kit: 1 test.	12/20/88

EXEMPT CHEMICAL PREPARATIONS—Continued

Supplier	Product name	Form	Date
Environmental Diagnostics, Inc .	EZ-Screen: Cannabinoid/Cocaine-Positive Control	Polyethylene Tube: 2.2ml, Kit: 1 test.	12/20/89
Fisher Diagnostics	TheraChem Anticonvulsants/Theophylline, Level I, II	Kit: 9 vials, vial: 5ml	3/3/81
Fisher Scientific	Electrophoretic Buffer No. 1 pH 8.60, Ionic Strength 0.05, Catalog No. E–1.	Packet: 12.14 g	10/27/72
Fisher Scientific	Electrophoretic Buffer No. 2, pH 8.60, Ionic Strength 0.075, Catalog No. E–2.	Packet: 18.16 g	10/27/72
Fisher Scientific	IL-Test Phenobarbital	Kit: contains 2 plastic containers of reagent 2.	3/15/88
Fisher Scientific	IL-Test Phenobarbital Conjugate, Reagent 2	Plastic Container: 16 ml	3/15/88
Fisher Scientific	Owren's Veronal Buffer, CS1094–34	Vial: 10 ml	8/18/86
Fisher Scientific	Owren's Veronal Buffer, CS1094–38	Vial: 25 ml	8/18/86
Fisher Scientific	SeraChem Abnormal Clinical Chemistry Control Serum (Human) Unassayed No. 2906.	Vial: 5ml, 10ml	4/16/82
Fisher Scientific	SeraChem Abnormal Clinical Chemistry Control Serum (Human), Assayed No. 2905.	Vial: 5ml	4/16/82
Fisher Scientific	SeraChem Normal Clinical Chemistry Control Serum (Human), Assayed No. 2907.	Vial: 5ml	4/16/82
Fisher Scientific	SeraChem Plus Clinical Chemistry Control Sera Unassayed (Bovine) Level I.	Vial: 10ml, Box: 50 vials, Carton: 4 boxes.	7/25/89
Fisher Scientific	SeraChem Plus Clinical Chemistry Control Sera Unassayed (Bovine) Level II.	Vial: 10 ml, Box: 50 vials, Carton: 4 boxes.	7/25/89
Fisher Scientific	SeraChem Normal Clinical Chemistry Control Serum (Human), Unassayed No. 2908.	Vial: 5ml, 10ml	4/16/82
Fisher Scientific	TDM Cal	Kit: 7 Vials	11/26/86
Fisher Scientific	TDM Cal (B–F)	Vials: 5 ml	11/26/86
Fisher Scientific	Thera Chem TDC Therapeutic Drug Controls, Low and High Levels, 2840–58.	Kit: 6 vials	1/12/84
Fisher Scientific	TheraChem-Plus TDC Therapeutic Drug Controls, Tri-Level, No. 2845–94.	Kit: 9 vials	3/19/86
Fisher Scientific	Therapeutic Drug Control, High Level III, No. 2848–31	Vial: 5ml	3/19/86
Fisher Scientific	Therapeutic Drug Control, High Level, 2842–31	Vial: 5ml	1/12/84
Fisher Scientific	Therapeutic Drug Control, Low Level I, No. 2846–31	Vial: 5ml	3/19/86
Fisher Scientific	Therapeutic Drug Control, Low Level, 2841–31	Vial: 5ml	1/12/84
Fisher Scientific	Therapeutic Drug Control, Mid-Range Level II, No. 2847–31	Vial: 5ml	3/19/86
Fisher Scientific	Urine Chemistry Control (Human) Level II, No. 2935–80	Vial: 25ml	4/6/78
Fisher Scientific	Urine Toxicology Control No. 2950–61	Vial: 25ml	4/6/78
Flow Laboratories	DGV No. 28–010	Bottle: 125 ml	4/16/73
Flow Laboratories	Human "O" DGV (Dextrose Gelatin Veronal Buffer) No. 28–080.	Glass Vial: 100 ml	10/14/76
GIBCO Laboratories	Complement Fixation Buffer Solution, pH 7.3–7.4, NDC 0118115–0247–1.	Bottle: 1 liter	1/28/74
GIBCO Laboratories	Complement Fixation Buffer Solution, pH 7.3–7.4, NDC 011815–0247–2.	Bottle: 500 ml	4/5/77
GIBCO Laboratories	Dextrose-Gelatin-Veronal Buffer Solution NDC No. 815–0566–1 and No. 815–0566–2.	Bottle: 100 and 500 ml	7/5/73
GIBCO Laboratories	Electrophoresis Buffer Solution, pH 8.6, NDC 011815–0245–1	Bottle: 1 liter	1/28/74
GIBCO Laboratories	I.E.P. Buffer Solution pH 8.2 NDC 011815–0246–1	Bottle: 1 liter	1/28/74
Gelman Sciences, Inc	Drug Control Set No. 51911	Set: 3 vials of 50 ml each	4/6/72
Gelman Sciences, Inc	Drug Standard Set, No. 51910	Set: 3 vials of 2 ml each	4/6/72
Gelman Sciences, Inc	Hi-Phore Buffer	Glass Vial: 15 g	2/11/82
Gelman Sciences, Inc	High Resolution Buffer-Tris Barbital Buffer No. 51104	Vial: 10 dr	12/22/71
Gumm Chem. Co	Niflow Initial Additive	Drums: 5 Gallons	9/30/85
Gumm Chem. Co	Niflow Maintenace Additive	Drums: 5 Gallons	9/30/85
Hach Chemical Co	pH 8.3 Buffer Powder Pillows. No. 898–98	Pillow: 1 g. each	11/30/71
Helena Laboratories	Cardio REP CK Isoenzymes Gel	Plate: 4.6″×2.4″	9/24/93
Helena Laboratories	CK–LD Buffer Catalog No. 5808	Packet: 18.332 g. , 10 packets/box.	3/26/86
Helena Laboratories	Cardio REP CK Isoenzymes Kit, Cat. # 3310	Kit: 10 Plates	9/24/93
Helena Laboratories	Cardio REP CK Isoforms Gel	Plate: 4.6″×2.4″	9/24/93
Helena Laboratories	Cardio REP CK Isoforms Kit, Cat. # 3305	Kit: 10 Plates	9/24/93
Helena Laboratories	Electra B1 Buffer, Catalog No. 5016	Packet: 13.1g. 10 packets/ box	12/28/73
Helena Laboratories	Electra B2 Buffer, Catalog No. 5017	Packet: 18.2 g. 10 packets/box.	12/28/73
Helena Laboratories	Electra HR Buffer, Catalog No. 5805	Packet: 18.1 g. 10 packets/box.	12/28/73
Helena Laboratories	HDL Electrophoresis Buffer	Packet: 36 g	12/18/85
Helena Laboratories	Isoamylase Cathode Buffer	Packet: 9.7 g	12/18/85
Helena Laboratories	Isoamylase Kit Catalog No. 5925	Kit: 2 Packets Cathode Buffer .	1/24/86
Helena Laboratories	Owren's Veronal Buffer Cat. No. 5375	Plastic Bottle: 125 ml	9/15/88
Helena Laboratories	REP ALP–15 Gel	Plate: 5.8″×5.5″	8/26/93
Helena Laboratories	REP Alkaline Phosphatase Cat. # 3152	Kit: 10 Plates	8/26/93

EXEMPT CHEMICAL PREPARATIONS—Continued

Supplier	Product name	Form	Date
Helena Laboratories	REP CK Isoforms-15	Plate: 5.8″×5.5″	3/9/88
Helena Laboratories	REP CK Isoforms-15 Kit: Cat. No. 3081	Kit: 10 plates	3/9/88
Helena Laboratories	REP CK Isoforms-4 Cat. # 3083	Kit: 10 Plates	8/26/93
Helena Laboratories	REP CK Isoforms-4 Gel	PLate: 5.8″×1.25″	8/26/93
Helena Laboratories	REP CK Isoforms-8 Cat. # 3082	Kit: 10 Plates	8/26/93
Helena Laboratories	REP CK Isoforms-8 Gel	Plate: 5.8″×2.18″	8/26/93
Helena Laboratories	REP CK–12	Plate: 5.8″×2.18″	3/9/88
Helena Laboratories	REP CK–12 Isoenzyme Kit: Cat. No. 3071	Kit: 10 plates	3/9/88
Helena Laboratories	REP CK–2 STAT Kit, Cat. No. 3074	Kit: 10 plates (5.8″×0.6″)	3/30/89
Helena Laboratories	REP CK–30	Plate: 5.8″×5.5″	3/9/88
Helena Laboratories	REP CK–30 Isoenzyme Kit	Kit: 10 plates	3/9/88
Helena Laboratories	REP CK–6	Plate: 5.8″×1.25″	3/9/88
Helena Laboratories	REP CK–6 Isoenzyme Kit: Cat. No. 3072	Kit: 10 plates	3/9/88
Helena Laboratories	REP ImmunoFix Kit # 3150	Kit: 10 plates	3/9/93
Helena Laboratories	REP LD	Plates: 5.8″×5.5″, 5.8″×2.18″, 5.8″×1.25″.	3/9/88
Helena Laboratories	REP SPE Hi Res-15 Kit, Cat. No. 3176	Kit: 10 plates (5.8″×5.5″)	3/30/89
Helena Laboratories	REP SPE–16 Template (Acid Blue) Kit, Cat. # 3171	Kit: 10 Plates	9/14/93
Helena Laboratories	REP SPE–16 Template (Ponceau S) Kit, Cat. # 3161	Kit: 10 Plates	9/14/93
Helena Laboratories	REP SPE–16 Template Gel	Plate: 5.8″ 2.18″	9/14/93
Helena Laboratories	REP SPE–30 Template (Acid Blue) Kit, Cat. # 3170	Kit: 10 Plates	9/14/93
Helena Laboratories	REP SPE–30 Template (Ponceau S) Kit, Cat. # 3160	Kit: 10 Plates	9/14/93
Helena Laboratories	REP SPE–30 Template Gel	Plate: 5.8″×5.5″	9/14/93
Helena Laboratories	REP SPE–8 Template (Acid Blue) Kit, Cat. # 3172	Kit: 10 Plates	9/14/93
Helena Laboratories	REP SPE–8 Template (Ponceau S) Kit, Cat. # 3162	Kit: 10 Plates	9/14/93
Helena Laboratories	REP SPE–8 Template Gel	Plate: 5.8″×1.25″	9/14/93
Helena Laboratories	REP Ultra-30 HDL, VLDL/LDL Gel	Plate: 5.8″×5.5″	9/24/93
Helena Laboratories	REP Ultra-30 HDL, VLDL/LDL Kit, Cat. # 3183	Kit: 10 Plates	9/24/93
Helena Laboratories	REP Ultra-8 HDL, VLDL/LDL Gel	Plate: 5.8″×1.25″	9/24/93
Helena Laboratories	REP Ultra-8 HDL, VLDL/LDL Kit, Cat. # 3185	Kit: 10 Plates	9/24/93
Helena Laboratories	REP–HDL–12 Isoenzyme Kit Cat. No. 3187	Kit: 10 Plates (5.8″×2.18″)	9/15/88
Helena Laboratories	REP–HDL–30 Isoenzyme Kit Cat. No. 3186	Kit: 10 Plates (5.8″×5.5″)	9/15/88
Helena Laboratories	REP–HDL–6 Isoenzyme Kit Cat. No. 3188	Kit: 10 Plates (5.8″×1.25″)	9/15/88
Helena Laboratories	REP–Lipo–12 Kit Cat. No. 3181	Kit: 10 Plates (5.8″×2.18″)	9/15/88
Helena Laboratories	REP–Lipo–30 Kit Cat. No. 3180	Kit: 10 Plates (5.8″×5.5″)	9/15/88
Helena Laboratories	REP–Lipo–6 Kit Cat. No. 3182	Kit: 10 Plates (5.8″×1.25″)	9/15/88
Helena Laboratories	REP–SP–12 Isoenzyme Kit Cat. No. 3171	Kit: 10 Plates (5.8″×2.18″)	9/15/88
Helena Laboratories	REP–SP–30 Isoenzyme Kit Cat. No. 3170	Kit: 10 Plates (5.8″×5.5″)	9/15/88
Helena Laboratories	REP–SP–6 Isoenzyme Kit Cat. No. 3172	Kit: 10 Plates (5.8″×1.25″)	9/15/88
Helena Laboratories	Super Z–12XHDL Cholesterol Supply Kit Catalog No. 5470)	Kit: 3 Packages buffer 36 g	1/24/86
Helena Laboratories	TITAN GEL Alkaline Phosphatase (HR) Cat. No. 3058	Kit: 10 Plates	8/26/93
Helena Laboratories	TITAN GEL Alkaline Phosphatase (HR) Kit, Cat. No. 3058	Kit: 1 bag	6/19/89
Helena Laboratories	TITAN GEL Alkaline Phosphatase Buffer	Plastic Bag: 13.1g	6/19/89
Helena Laboratories	TITAN GEL Alkaline Phosphatase Gel	Plate: 3.5″×2.9″	8/26/93
Helena Laboratories	Titan Gel High Resolution Protein Buffer	Packet: 25.9 g	4/12/83
Helena Laboratories	Titan Gel High Resolution Protein Kit Catalog No. 3040	Kit: 10 Plates (90mm×75mm), 2 Packages Buffer.	3/3/86
Helena Laboratories	Titan Gel High Resolution Protein Plate	Plate: (90mm×75mm)	3/3/86
Helena Laboratories	Titan Gel IFE Buffer	Packet: 25.9 g	12/18/85
Helena Laboratories	Titan Gel IFE Plate	Plate: (90mm×75mm)	3/5/86
Helena Laboratories	Titan Gel Immuno Fix Kit Catalog No. 3046	Kit: 10 Plates (90mm×75mm), 2 Packets IFE Buffer.	1/24/86
Helena Laboratories	Titan Gel ImmunoFix Plus Kit # 3067	Kit: 10 plates, 1 pkg IFE buffer	3/9/93
Helena Laboratories	Titan Gel ImmunoFix-9 Kit # 3051	Kit: 10 plates, 1 pkg IFE buffer	3/9/93
Helena Laboratories	Titan Gel Iso Dot LDH Buffer	Packet: 19.6 g	1/7/86
Helena Laboratories	Titan Gel Iso Dot LDH Isoenzyme Plate	Plate: (90mm×75mm)	12/18/85
Helena Laboratories	Titan Gel Iso Dot LDH Kit Catalog No. 3062	Kit: 10 Plates (90mm×75mm), 1 Packet Iso Dot LDH Buffer.	1/24/86
Helena Laboratories	Titan Gel LD Buffer	Packet: 21.5 g	11/26/86
Helena Laboratories	Titan Gel LD Isoenzyme Diluent	Bottle: 10 ml	11/26/86
Helena Laboratories	Titan Gel LDH Isoenzyme Buffer	Packet: 22.7 g	3/7/83
Helena Laboratories	Titan Gel LDH Isoenzyme Plate	Plate: (90mm×75mm)	12/18/85
Helena Laboratories	Titan Gel LDH Isoenzyme Reagent	Vial: 2ml, 10 vials/box	1/7/86
Helena Laboratories	Titan Gel Lipoprotein Buffer	Packet: 17.3 g	12/18/85
Helena Laboratories	Titan Gel Lipoprotein Kit Catalog No. 3045	Kit: 1 Packet Buffer	1/24/86
Helena Laboratories	Titan Gel Lipoprotein Plate	Plate: (90×75 mm)	1/9/87
Helena Laboratories	Titan Gel Multi-Slot Lipo–17 Kit Catalog No. 3095	Kit: 10 plates (81×143 mm) 1 packet buffer (21.6 g).	1/9/87
Helena Laboratories	Titan Gel Multi-Slot Lipo–17 Plate	Plate: (81×143 mm)	1/9/87
Helena Laboratories	Titan Gel Multi-Slot SP–17 Kit Catalog No. 3091	Kit: 10 plates (81×143 mm) 1 packet buffer (29.1 g).	1/9/87
Helena Laboratories	Titan Gel Multi-Slot SP–17 Plate	Plate: 81×143 mm	1/9/87

EXEMPT CHEMICAL PREPARATIONS—Continued

Supplier	Product name	Form	Date
Helena Laboratories	Titan Gel Serum Protein Buffer	Packet: 29.1 g	4/12/83
Helena Laboratories	Titan Gel Serum Protein Kit Catalog No. 3041	Kit: 10 Plates (90mm×75mm), 1 Packet Buffer.	1/24/86
Helena Laboratories	Titan Gel Serum Protein Plate	Plate: (90mm×75mm)	12/18/85
Helena Laboratories	Titan Gel Silver Stain Buffer	Packet: 25.9g	12/18/85
Helena Laboratories	Titan Gel Silver Stain Kit Catalog No. 3035	Kit: 10 Plates (90mm×75mm), 2 Packets Buffer.	1/24/86
Helena Laboratories	Titan Gel Silver Stain Plate	Plate: (90mm×75mm)	3/3/86
Helena Laboratories	Titan Gel–PC LDH Isoenzyme Kit Catalog No. 3053	Kit: 10 Plates (90mm×75mm), 1 Packet LDH Buffer, 1 Box LDH Reagent.	1/24/86
Helena Laboratories	Titan Gel–PC LDH Isoenzyme Plate	Plate: (90mm×75mm)	12/18/85
Helena Laboratories	Titan III Agar Catalog No. 5023	Packet: 5 g. (5 Packets/box)	12/28/73
Helena Laboratories	Titan IV IE Plate (large)	Package: plates, 3 by 4 in	12/28/73
Helena Laboratories	Titan IV IE Plate (small)	Package: plates, 1 by 3 in	12/28/73
Helena Laboratories	Titan IV IE Plate Kit	Kit: 12 small (1 by 3 in.) IE plates, 1 box B1 Buffer.	12/28/73
Helena Laboratories	Titan IV IE Plate Kit	Kit: 10 large (3 by 4 in.) IE Plates, 1 box B1 Buffer.	12/28/73
High Standard Products	(DL) Methamphetamine 1.0mg/ml	Ampule: 2ml	5/11/93
High Standard Products	(DL) Methamphetamine-d10 100µg/ml	Ampule: 2ml	5/11/93
High Standard Products	(DL) Methamphetamine-d5 100µg/ml	Ampule: 2ml	5/11/93
High Standard Products	11-Nor-Delta-8-Carboxy-Tetrahydrocannabinol 100µg/ml	Ampule: 2ml	5/11/93
High Standard Products	11-Nor-Delta-9-Carboxy-Tetrahydrocannabinol 100ug/ml	Ampule: 2ml	5/11/93
High Standard Products	11-Nor-Delta-9-Carboxy-Tetrahydrocannabinol-d10 100ug/ml	Ampule: 2ml	5/11/93
High Standard Products	11-Nor-Delta-9-Carboxy-Tetrahydrocannabinol-d3 100ug/ml	Ampule: 2ml	5/11/93
High Standard Products	11-Nor-Delta8 carboxy THC; 1.0mg/ml	Ampule: 2ml	4/15/94
High Standard Products	11-Nor-Delta9 carboxy THC Screening/Confirmation Calibrators; 10, 25, 50, 100, 250, ng/ml.	Ampules: 10; 5 of 2ml, 5 of 20ml.	4/15/94
High Standard Products	11-Nor-Delta9 carboxy THC-d10; 0.1mg/ml	Ampule: 2ml	4/15/94
High Standard Products	11-Nor-Delta9 carboxy THC; 1.0mg/ml	Ampule: 2ml	4/15/94
High Standard Products	11-nor-Delta9 carboxy THC Controls; 10, 20, 100 ng/ml	Ampules: 6; 3 of 2ml, 3 of 20ml.	4/15/94
High Standard Products	3, 4-Methylenedioxymethamphetamine (MDMA) 100ug/ml	Ampule: 2ml	5/11/93
High Standard Products	3, 4-Methylenedioxymethamphetamine-d5 (MDMA) 100ug/ml	Ampule: 2ml	5/11/93
High Standard Products	3-Methylfentanyl 100ug/ml	Ampule: 2ml	5/11/93
High Standard Products	3-Methylfentanyl-d3 100ug/ml	Ampule: 2ml	5/11/93
High Standard Products	4-Hydroxyamphetamine; 1.0mg/ml	Ampule: 2ml	4/15/94
High Standard Products	4-Hydroxymethamphetamine; 1.0mg/ml	Ampule: 2ml	4/15/94
High Standard Products	4-Methoxyamphetamine 1.0mg/ml	Ampule: 2ml	5/11/93
High Standard Products	4-Methoxyamphetamine-d5 100ug/ml	Ampule: 2ml	5/11/93
High Standard Products	6-Acetylmorphine 100ug/ml	Ampule: 2ml	5/11/93
High Standard Products	6-Acetylmorphine-d3 100ug/ml	Ampule: 2ml	5/11/93
High Standard Products	6-Acetylmorphine; 0.1mg/ml, 1.0mg/ml	Ampule: 2ml	4/15/94
High Standard Products	Amphetamine Cut-Off Controls; 375, 625, 1500 ng/ml	Ampules: 3; 20ml each	4/15/94
High Standard Products	Amphetamine Screening Confirmation Calibrators; 500, 1000, 1500, 2000 ng/ml.	Ampules: 4; 20ml each	4/15/94
High Standard Products	Benzoylecgonine 1.0mg/ml	Ampule: 2ml	5/11/93
High Standard Products	Benzoylecgonine Cut-Off Controls; 100, 200, 300, ng/ml	Ampules: 3; 20ml each	4/15/94
High Standard Products	Benzoylecgonine Propyl Ester 1.0mg/ml	Ampule: 2ml	5/11/93
High Standard Products	Benzoylecgonine Screening Confirmation Calibrators; 150, 300, 450, 600 ng/ml.	Ampules: 4; 20ml each	4/15/94
High Standard Products	Benzoylecgonine-d3 100ug/ml	Ampule: 2ml	5/11/93
High Standard Products	Benzoylecgonine-d3; 0.1mg/ml	Ampule: 2ml	4/15/94
High Standard Products	Benzoylecgonine-d8 100ug/ml	Ampule: 2ml	5/11/93
High Standard Products	Benzoylecgonine-d8; 0.1mg/ml	Ampule; 2ml	4/15/94
High Standard Products	Cocaethylene 1.0mg/ml	Ampule: 2ml	5/11/93
High Standard Products	Cocaethylene-d3 100ug/ml	Ampule: 2ml	5/11/93
High Standard Products	Cocaethylene-d3; 0.1mg/ml	Ampule: 2ml	4/15/94
High Standard Products	Cocaethylene-d8 100ug/ml	Ampule: 2ml	5/11/93
High Standard Products	Cocaethylene-d8; 0.1mg/ml	Ampule: 2ml	4/15/94
High Standard Products	Cocaine 1.0mg/ml	Ampule: 2ml	5/11/93
High Standard Products	Cocaine-d3 100ug/ml	Ampule: 2ml	5/11/93
High Standard Products	Cocaine-d8 1.0mg/ml	Ampule: 2ml	5/11/93
High Standard Products	Codeine 100ug/ml	Ampule: 2ml	5/11/93
High Standard Products	Codeine Cut-Off Controls; 225, 375, 900 ng/ml	Ampules: 3; 20ml each	4/15/94
High Standard Products	Codeine Screening Confirmation Calibrators; 300, 600, 900, 1200 ng/ml.	Ampules: 4; 20ml each	4/15/94
High Standard Products	Codeine-d3 100ug/ml	Ampule: 2ml	5/11/93
High Standard Products	Codeine-d3; 0.1mg/ml	Ampule: 2ml	4/15/94
High Standard Products	Codeine-d6 100ug/ml	Ampule: 2ml	5/11/93
High Standard Products	Codeine-d6; 0.1mg/ml	Ampule: 2ml	4/15/94

EXEMPT CHEMICAL PREPARATIONS—Continued

Supplier	Product name	Form	Date
High Standard Products	D-Amphetamine; 1.0mg/ml	Ampule: 2ml	4/15/94
High Standard Products	DL Amphetamine 1.0mg/ml	Ampule: 2ml	5/11/93
High Standard Products	DL Amphetamine-d10 100ug/ml	Ampule: 2ml	5/11/93
High Standard Products	DL Amphetamine-d5 100ug/ml	Ampule: 2ml	5/11/93
High Standard Products	DL-Amphetamine-d11; 0.1mg/ml	Ampule: 2ml, 20ml	4/15/94
High Standard Products	DL-Amphetamine-d5; 0.1mg/ml	Ampule; 2ml	4/15/94
High Standard Products	DL-Amphetamine-d6; 0.1mg/ml	Ampule: 2ml, 20ml	4/15/94
High Standard Products	Delta-8-Tetrahydrocannabinol 100ug/ml	Ampule: 2ml	5/11/93
High Standard Products	Delta-9-Tetrahydrocannabinol 100ug/ml	Ampule: 2ml	5/11/93
High Standard Products	Delta-9-Tetrahydrocannabinol 100ug/ml	Ampule: 2ml	5/11/93
High Standard Products	Delta-9-Tetrahydrocannabinol-d10 100ug/ml	Ampule: 2ml	5/11/93
High Standard Products	Delta-9-Tetrahydrocannabinol-d6 100ug/ml	Ampule: 2ml	5/11/93
High Standard Products	Delta-9-THC; 1.0mg/ml	Ampule: 2ml	4/15/94
High Standard Products	Diazepam 1.0mg/ml	Ampule: 2ml	5/11/93
High Standard Products	Diazepam-d5 100ug/ml	Ampule: 2ml	5/11/93
High Standard Products	Diphenoxylate 1.0 mg/ml	Ampule: 2ml	5/11/93
High Standard Products	Ecgonine 1.0mg/ml	Ampule: 2ml	5/11/93
High Standard Products	Ecgonine Methyl Ester 1.0mg/ml	Ampule: 2ml	5/11/93
High Standard Products	Ecgonine Methyl Ester-d3 100ug/ml	Ampule: 2ml	5/11/93
High Standard Products	Ecgonine-d3 100ug/ml	Ampule: 2ml	5/11/93
High Standard Products	Fentanyl 1.0mg/ml	Ampule: 2ml	5/11/93
High Standard Products	Fentanyl-d5 100ug/ml	Ampule: 2ml	5/11/93
High Standard Products	Fentanyl-d5; 0.1mg/ml	Ampule: 2ml	4/15/94
High Standard Products	Heroin, 1.0mg/ml	Ampule: 2ml	3/21/95
High Standard Products	Heroin-D9, 0.1mg/ml	Ampule: 2ml	3/21/95
High Standard Products	Hydrocodone 1.0mg/ml	Ampule: 2ml	5/11/93
High Standard Products	Hydrocodone-d3 100ug/ml	Ampule: 2ml	5/11/93
High Standard Products	Hydromorphone 1.0mg/ml	Ampule: 2ml	5/11/93
High Standard Products	Hydromorphone-d3 100ug/ml	Ampule: 2ml	5/11/93
High Standard Products	Lysergic Acid Diethylamide 25 ug/ml	Ampule: 2ml	5/11/93
High Standard Products	Lysergic Acid Diethylamide-d3 25 ug/ml	Ampule: 2ml	5/11/93
High Standard Products	Lysergic Acid Diethylamide-dl 25ug/ml	Ampule: 2ml	5/11/93
High Standard Products	Lysergic Acid N-Methyl-Propylamide (LAMPA) 25ug/ml	Ampule: 2ml	5/11/93
High Standard Products	Lysergic acid diethylamide-d7; 0.025mg/ml	Ampule: 2ml	4/15/94
High Standard Products	Methadone 1.0mg/ml	Ampule: 2ml	5/11/93
High Standard Products	Methadone-D6, 0.1mg/ml	Ampule: 2ml	3/21/95
High Standard Products	Methadone-d3 100ug/ml	Ampule: 2ml	5/11/93
High Standard Products	Methamphetamine Cut-Off Controls; 225, 375, 900 ng/ml	Ampules: 3; 20ml each	4/15/94
High Standard Products	Methamphetamine Screening Confirmation Calibrators; 500, 1000, 1500, 2000 ng/ml.	Ampules: 4; 20ml each	4/15/94
High Standard Products	Methamphetamine-d14; 0.1mg/ml	Ampule: 2ml, 20ml	4/15/94
High Standard Products	Methamphetamine-d5; 0.1mg/ml	Ampule: 2ml	4/15/94
High Standard Products	Methamphetamine-d9; 0.1mg/ml	Ampule: 2ml, 20ml	4/15/94
High Standard Products	Methaqualone 1.0 mg/ml	Ampule: 2ml	5/11/93
High Standard Products	Methaqualone-d3 100ug/ml	Ampule: 2ml	5/11/93
High Standard Products	Methylenedioxyamphetamine (MDA) 1.0mg/ml	Ampule: 2ml	5/11/93
High Standard Products	Methylenedioxyamphetamine (MDA) d-5 100ug/ml	Ampule: 2ml	5/11/93
High Standard Products	Methylenedioxyethylamphetamine, 1.0mg/ml	Ampule: 2ml	3/21/95
High Standard Products	Methylenedioxyethylamphetamine-D7, 0.1mg/ml	Ampule: 2ml	3/21/95
High Standard Products	Morphine 1.0mg/ml	Ampule: 2ml	5/11/93
High Standard Products	Morphine Cut-Off Controls; 225, 375, 900 ng/ml	Ampules: 3; 20ml each	4/15/94
High Standard Products	Morphine Screening Confirmation Calibrators; 300, 600, 900, 1200 ng/ml.	Ampule: 4; 20ml each	4/15/94
High Standard Products	Morphine-d3 100ug/ml	Ampule: 2ml	5/11/93
High Standard Products	Morphine-d3; 0.1mg/ml	Ampule: 2ml	4/15/94
High Standard Products	Morphine-d4; 0.1mg/ml	Ampule: 2ml, 20ml	4/15/94
High Standard Products	NIDA Cut-Off Controls; Levels 1, 2, 3	Ampules: 6; 3 of 2ml, 3 of 20ml.	4/15/94
High Standard Products	Norcocaine 1.0mg/ml	Ampule: 2ml	5/11/93
High Standard Products	Norcodeine 1.0mg/ml	Ampule: 2ml	5/11/93
High Standard Products	Nordiazepam 1.0mg/ml	Ampule: 2ml	5/11/93
High Standard Products	Nordiazepam-d5 100ug/ml	Ampule: 2ml	5/11/93
High Standard Products	Normorphine 1.0mg/ml	Ampule: 2ml	5/11/93
High Standard Products	Oxazepam 1.0mg/ml	Ampule: 2ml	5/11/93
High Standard Products	Oxazepam-d5 100ug/ml	Ampule: 2ml	5/11/93
High Standard Products	Phencyclidine 1.0mg/ml	Ampule: 2ml	5/11/93
High Standard Products	Phencyclidine Cut-Off Controls; 18, 32, 75 ng/ml	Ampules: 3; 20ml each	4/15/94
High Standard Products	Phencyclidine Screening Confirmation Calibrators; 25, 50, 75, 100 ng/ml.	Ampule: 4; 20ml each	4/15/94
High Standard Products	Phencyclidine-d10 100ug/ml	Ampule: 2ml	5/11/93
High Standard Products	Phencyclidine-d10; 0.1mg/ml	Ampule: 2ml	4/15/94
High Standard Products	Phencyclidine-d5 100ug/ml	Ampule: 2ml	5/11/93

EXEMPT CHEMICAL PREPARATIONS—Continued

Supplier	Product name	Form	Date
High Standard Products	Phencyclidine-d5; 0.1mg/ml	Ampule: 2ml	4/15/94
High Standard Products	Phenobarbital, 1.0mg/ml	Ampule: 2ml	3/21/95
High Standard Products	Phenobarbital-D5	Ampule: 2ml	3/21/95
High Standard Products	Propoxyphene, 1.0mg/ml	Ampule: 2ml	3/21/95
High Standard Products	Propoxyphene-D5, 0.1mg/ml	Ampule: 2ml	3/21/95
High Standard Products	Secobarbital, 1.0mg/ml	Ampule: 2ml	3/21/95
High Standard Products	Secobarbital-D5, 0.1mg/ml	Ampule: 2ml	3/21/95
High Standard Products	Temazepam 1.0mg/ml	Ampule: 2ml	5/11/93
High Standard Products	Temazepam-d5 100ug/ml	Ampule: 2ml	5/11/93
High Standard Products	Urine Confirm (+25%)	Ampule: 20ml	3/20/95
High Standard Products	Urine Confirm (−25%)	Ampule: 20ml	3/20/95
High Standard Products	Urine Confirm (−40%) Retest	Ampule: 20ml	3/20/95
High Standard Products	Urine Confirm 3X Cutoff	Ampule: 20ml	3/20/95
High Standard Products	Urine Confirm Cutoff	Ampule: 20ml	3/20/95
High Standard Products	Urine Screen (+25%)	Ampule: 20ml	3/20/95
High Standard Products	Urine Screen (−25%)	Ampule: 20ml	3/20/95
High Standard Products	Urine Screen 3X Cutoff	Ampule: 20ml	3/20/95
High Standard Products	Urine Screen Cutoff	Ampule: 20ml	3/20/95
HyClone Laboratories, Inc	HyQ-CCM1	Bottle: 50-1000ml; Lined container: 10-1000L.	2/9/95
HyClone Laboratories, Inc	HyQ-CCM1 w/o Phenol Red	Bottle: 50-1000ml; Lined Container: 10-1000L.	2/9/95
HyClone Laboratories, Inc	Medium 925 w/o L-Glutamine, w/o Phenol Red	Bottle: 50-1000ml; Lined Container: 10-1000L.	2/9/95
HyClone Laboratories, Inc	Medium 925 with IGF, w/o Phenol Red	Bottle: 50-1000ml; Lined Container: 10-1000L.	2/9/95
HyClone Laboratories, Inc	Medium 925 with L-Glutamine, w/o Phenol Red	Bottle: 50-1000ml; Lined Container: 10-1000L.	2/9/95
HyClone Laboratories, Inc	Medium TLF with L-Glutamine	Bottle: 50-1000ml; Lined Container: 10-1000L.	2/9/95
Hycor Biomedical, Inc	Hycor AccuPINCH Cocaine Test	Bottle: 3ml Kit: 50 tests	8/21/90
Hycor Biomedical, Inc	Hycor AccuPINCH Morphine Test	Bottle: 3ml Kit: 50 tests	8/21/90
Hycor Biomedical, Inc	Hycor AccuPINCH Phencyclidine Test	Bottle: 3ml Kit: 50 tests	8/21/90
Hycor Biomedical, Inc	Hycor AccuPinch Methamphetamine Test	Bottle: 3ml; Kit: 50 Tests	10/29/91
Hycor Biomedical, Inc	Hycor AccuPinch THC Test	Bottle: 3ml; Kit: 50 Tests	10/29/91
Hycor Biomedical, Inc	Sentry Drugs of Abuse Urine Calibrator BARBITURATES Urine Calibrator- 4 levels.	Bottle: 10ml Kit: 4 bottles, 12 bottles.	8/24/90
Hycor Biomedical, Inc	Sentry Drugs of Abuse Urine Calibrator DELTA-9-THC Urine Calibrator - 4 levels.	Bottle: 10ml Kit: 4 bottles, 12 bottles.	8/24/90
Hycor Biomedical, Inc	Sentry Drugs of Abuse Urine Calibrator NORDIAZEPAM Urine Calibrator - 3 levels.	Bottle: 10ml Kit: 4 bottles, 12 bottles.	8/24/90
Hycor Biomedical, Inc	Sentry Drugs of Abuse Urine Calibrator OPIATES Urine Calibrator - 4 levels.	Bottle: 10ml Kit: 4 bottles, 12 bottles.	8/24/90
Hycor Biomedical, Inc	Sentry Drugs of Abuse Urine Calibrator PHENCYCLIDINE Urine Calibrator - 4 levels.	Bottle: 10ml Kit: 4 bottles, 12 bottles.	8/24/90
Hycor Biomedical, Inc	Sentry Drugs of Abuse Urine Calibrator, Amphetamine Urine Calibrator - 4 level.	Vial: 10ml, Kit: 12 vials, Kit: 4 vials.	3/29/89
Hycor Biomedical, Inc	Sentry Drugs of Abuse Urine Calibrator, Benzoylecgonine Urine Calibrator - 4 level.	Vial: 10ml, Kit: 12 vials, Kit: 4 vials.	3/29/89
Hycor Biomedical, Inc	Sentry Ligand/Combo Control High Level	Vial: 10ml Box: 15 vials	3/1/90
Hycor Biomedical, Inc	Sentry Ligand/Combo Control Low Level	Vial: 10ml Box: 15 vials	3/1/90
Hycor Biomedical, Inc	Sentry Ligand/Combo Control Mid Level	Vial: 10ml Box: 15 vials	3/1/90
Hycor Biomedical, Inc	Sentry Ligand/Combo Control Multi-Pack	Kit: 15 vials	3/1/90
Hycor/ICL Scientific	Drugs of Abuse Comprehensive Urine Control, HIGH POSITIVE.	Bottle: 30ml	2/24/89
Hycor/ICL Scientific	Drugs of Abuse Comprehensive Urine Control, LOWER THRESHOLD.	Bottle: 30ml	2/24/89
Hycor/ICL Scientific	Drugs of Abuse Comprehensive Urine Control, UPPER THRESHOLD.	Bottle: 30ml	2/24/89
Hycor/ICL Scientific	Drugs of Abuse Urine Control, CONFIRMATION	Box: 4-100 ml Bottles	10/21/88
Hycor/ICL Scientific	Drugs of Abuse Urine Control, SCREEN	Box: 4-30 ml Bottles	10/21/88
ICL Scientific	Therapeutic Drug Control I , TDC I (High Level)	Glass Vial: 10ml	8/14/85
ICL Scientific	Therapeutic Drug Control I, II, III, Tri-Level TDC Multipack	Glass Vials (12): 10ml	8/14/85
ICL Scientific	Therapeutic Drug Control II, TDC II (Mid-Level)	Glass Vial: 10ml	8/14/85
ICL Scientific	Therapeutic Drug Control III, TDC III (Low Level)	Glass Vial: 10ml	8/14/85
ICN Micromedic Systems, Inc	Immunogen: BZ–A	Plastic Vial: 1.5 ml	2/29/88
ICN Micromedic Systems, Inc	Immunogen: BZ–B	Plastic Vial: 1.5 ml	2/29/88
ICN Micromedic Systems, Inc	Immunogen: CD–A	Plastic Vial: 1.5 ml	2/29/88
ICN Micromedic Systems, Inc	Immunogen: M–A	Plastic Vial: 1.5 ml	2/29/88
ICN Micromedic Systems, Inc	Immunogen: M–B	Plastic Vial: 1.5 ml	2/29/88
ICN Micromedic Systems, Inc	Immunogen: TF–A	Plastic Vial: 1.5 ml	2/29/88

EXEMPT CHEMICAL PREPARATIONS—Continued

Supplier	Product name	Form	Date
ICN Micromedic Systems, Inc	Micromedic Combostat THC/Cocaine STANDARDS-2, 3, and 4.	Amber Glass Vial: 2 ml Plastic Bottle: 100 ml.	2/24/88
ICN Micromedic Systems, Inc	Micromedic CrackPot 57Co/125I Tracer Solution	Plastic Bottle: 25 ml, 1000 ml	2/24/88
ICN Micromedic Systems, Inc	Micromedic Morphine 125I Tracer Solution	Bottle: 50 ml, 1000 ml	2/29/88
ICN Micromedic Systems, Inc	Micromedic Morphine Standards 2, 3 and 4	Bottle: 5 ml, 100 ml	2/29/88
INCSTAR Corporation	(125I) Human TSH Tracer Cat. No. CA-2623	Vial: 15ml	3/08/91
INCSTAR Corporation	Anticonvulsant Drug Controls Levels I and II Cat. Nos. CA-2419, CA-2420.	Vial: 3.5ml	3/08/91
INCSTAR Corporation	Assay Buffer Cat. No. CA-2742	Bottle: 150ml	3/08/91
INCSTAR Corporation	Clinical Assays Gamma Coat (125I) Phenobarbital Radioimmunoassay Kits Cat. Nos. CA-2545, CA-2565.	Kit: 50, 500 assays	3/08/91
INCSTAR Corporation	Clinical Assays Gamma Coat (125I) Phenytoin Radioimmunoassay Kits Cat. Nos. CA-2537, CA-2557.	Kit: 50, 500 assays	3/08/91
INCSTAR Corporation	Clinical Assays Gamma Coat (125I) T3 Uptake Radioimmunoassay Kit Catalog Nos. CA-2539, CA-2539J, CA-2559, CA-2559J.	Kit: 100, 500 assays	3/08/91
INCSTAR Corporation	Clinical Assays Gamma Dab (125I) hTSH Radioimmunoassay Kit Cat. No. CA–1591.	Kit: 125 assays; Vial: 15ml	3/08/91
INCSTAR Corporation	HTSH Non-Specific Binding Reagent Cat. No. CA–2752	Vial: 3.5ml	3/08/91
INCSTAR Corporation	Human TSH Controls Levels I & II Cat. Nos. CA–2452, CA-2453.	Vial: 3.5ml	3/08/91
INCSTAR Corporation	Human hTSH Blank Cat. No. CA-2885	Vial: 15ml	3/08/91
INCSTAR Corporation	Phenobarbital Standards: 1, 3, 10, 30, 100 ug/ml Cat. Nos. CA-2380-2384.	Bottle: 3.5ml	3/08/91
INCSTAR Corporation	Rabbit Anti-Human TSH Serum Cat. No. CA–2145	Vial: 15ml	3/08/91
INCSTAR Corporation	htsH Standards: 2, 5, 10, 20, 50 uIU/ml Cat. Nos. CA-2886-2890.	Bottle: 3.5ml	3/08/91
ISOTEC, Inc	(-) 11 Nor-9-Carboxy-Delta-9-THC-D3, 100ug/ml	Ampule: 2ml	6/19/95
ISOTEC, Inc	(-) 11-Nor-9-Carboxy-Delta-9-THC, 100ug/ml	Ampule: 2ml	6/19/95
ISOTEC, Inc	6-Acetylmorphine, 1 mg/ml	Ampule: 2ml	6/19/95
ISOTEC, Inc	6-Acetylmorphine-D3, 100ug/ml, 1mg/ml	Ampule: 2ml	6/19/95
ISOTEC, Inc	6-Acetylmorphine-D6, 100ug/ml, 1mg/ml	Ampule; 2ml	6/19/95
ISOTEC, Inc	Benzoylecgonine, 1mg/ml	Ampule: 2ml	6/19/95
ISOTEC, Inc	Benzoylecgonine-D3, 100ug/ml, 1mg/ml	Ampule: 2ml	6/19/95
ISOTEC, Inc	Cocaethylene, 1mg/ml	Ampule: 2ml	6/19/95
ISOTEC, Inc	Cocaethylene-D3, 100ug/ml, 1mg/ml	Ampule: 2ml	6/19/95
ISOTEC, Inc	Cocaine, 1mg/ml	Ampule: 2ml	6/19/95
ISOTEC, Inc	Cocaine-D3, 100ug/ml, 1mg/ml	Ampule: 2ml	6/19/95
ISOTEC, Inc	Codeine, 1mg/ml	Ampule: 2ml	6/19/95
ISOTEC, Inc	Codeine-D3, 100ug/ml, 1mg/ml	Ampule: 2ml	6/19/95
ISOTEC, Inc	DL-3, 4-Methylenedioxyamphetamine, 1mg/ml	Ampule: 2ml	9/18/95
ISOTEC, Inc	DL-3, 4-Methylenedioxyamphetamine-D5, 100ug/ml, 1mg/ml	Ampule: 2ml	9/18/95
ISOTEC, Inc	DL-3, 4-Methylenedioxymethamphetamine, 1mg/ml	Ampule: 2ml	9/18/95
ISOTEC, Inc	DL-3, 4-Methylenedioxymethamphetamine-D8, 100ug/ml, 1mg/ml.	Ampule: 2ml	9/18/95
ISOTEC, Inc	DL-Amphetamine-D6, 100ug/ml, 1mg/ml	Ampule: 2ml	6/19/95
ISOTEC, Inc	DL-Amphetamine, 1mg/ml	Ampule: 2ml	6/19/95
ISOTEC, Inc	DL-Methamphetamine, 1mg/ml	Ampule: 2ml	9/18/95
ISOTEC, Inc	DL-Methamphetamine-D9, 100ug/ml, 1mg/ml	Ampule: 2ml	9/18/95
ISOTEC, Inc	DL-Methylphenidate, 1mg/ml	Ampule: 2ml	9/18/95
ISOTEC, Inc	Delta-9-THC, 1mg/ml	Ampule: 2ml	6/19/95
ISOTEC, Inc	Delta-9-THC-D3, 100ug/ml	Ampule: 2ml	6/19/95
ISOTEC, Inc	Ecgonine Methyl Ester, 1mg/ml	Ampule: 2ml	6/19/95
ISOTEC, Inc	Ecgonine Methyl Ester-D3, 100ug/ml, 1mg/ml	Ampule: 2ml	6/19/95
ISOTEC, Inc	Ecgonine, 1mg/ml	Ampule: 2ml	6/19/95
ISOTEC, Inc	Fentanyl, 100ug/ml, 1mg/ml	Ampule: 2ml	9/18/95
ISOTEC, Inc	Fentanyl-D5, 100ug/ml, 1mg/ml	Ampule: 2ml	9/18/95
ISOTEC, Inc	Hydrocodone, 1mg/ml	Ampule: 2ml	6/19/95
ISOTEC, Inc	Hydrocodone-D3, 100ug/ml, 1mg/ml	Ampule: 2ml	6/19/95
ISOTEC, Inc	Hydromorphone, 1mg/ml	Ampule: 2ml	6/19/95
ISOTEC, Inc	Hydromorphone-D3, 100ug/ml, 1mg/ml	Ampule: 2ml	6/19/95
ISOTEC, Inc	Lysergic Acid Diethylamide, 25ug/ml	Ampule: 2ml	6/19/95
ISOTEC, Inc	Lysergic Acid Diethylamide-D3, 25ug/ml	Ampule: 2ml	6/19/95
ISOTEC, Inc	Lysergic Acid N-Methyl Propylamide, 25ug/ml	Ampule: 2ml	6/19/95
ISOTEC, Inc	Methadone, 1mg/ml	Ampule: 2ml	9/18/95
ISOTEC, Inc	Methadone-D3, 100ug/ml, 1mg/ml	Ampule: 2ml	9/18/95
ISOTEC, Inc	Morphine, 1mg/ml	Ampule: 2ml	6/19/95
ISOTEC, Inc	Morphine-3-beta-D-Glucuronide, 100ug/ml, 1mg/ml	Ampule: 2ml	9/18/95
ISOTEC, Inc	Morphine-D3, 100ug/ml, 1mg/ml	Ampule: 2ml	6/19/95
ISOTEC, Inc	Norcocaine, 1mg/ml	Ampule: 2ml	6/19/95
ISOTEC, Inc	Pentobarbital, 1mg/ml	Ampule: 2ml	9/18/95
ISOTEC, Inc	Pentobarbital-D5, 100ug/ml, 1mg/ml	Ampule: 2ml	9/18/95

EXEMPT CHEMICAL PREPARATIONS—Continued

Supplier	Product name	Form	Date
ISOTEC, Inc	Phencyclidine, 1mg/ml	Ampule: 2ml	6/19/95
ISOTEC, Inc	Phencyclidine-D5, 100ug/ml	Ampule: 2ml	6/19/95
ISOTEC, Inc	Secobarbital, 1mg/ml	Ampule: 2ml	9/18/95
ISOTEC, Inc	Secobarbital-D5, 100ug/ml, 1mg/ml	Ampule: 2ml	9/18/95
Immunotech Corp	Amphetamine Enzyme Conjugate	Bottle: 10.5ml	9/28/89
Immunotech Corp	Amphetamine Positive Urine Calibrator	Bottle: 1ml	9/28/89
Immunotech Corp	Amphetamine-ALK Phos Cat. No. 612; 50 units, 300 units	Bottle: 10ml	3/12/90
Immunotech Corp	Amphetamine-HRP Cat. No. 613; 50 units	Bottle: 10ml	3/12/90
Immunotech Corp	Benzoylecgonine-Alk Phos Cat. # 602; 50 units, 300 units	Bottle: 10ml	3/12/90
Immunotech Corp	Benzoylecgonine-HRP Cat. No. 604; 50 units, 300 units	Bottle: 10ml	3/12/90
Immunotech Corp	Cocaine Conjugate No. 0364-SIG	Bottle: 75ml	6/13/91
Immunotech Corp	Cocaine Metabolite Enzyme Conjugate	Vial: 10.5ml	9/28/89
Immunotech Corp	Cocaine Metabolite Positive Urine Calibrator	Vial: 2ml	9/28/90
Immunotech Corp	Delta-8-tetrahydrocannabinol-ALK Phos Cat. No. 616; 50 units, 300 units.	Bottle: 10 ml	3/12/90
Immunotech Corp	Delta-8-tetrahydrocannabinol-HRP Cat. No. 618; 50 units	Bottle: 10ml	3/12/90
Immunotech Corp	ENDAB Phenobarbital Kit, Cat. No. 119	Kit: 100 tests, 4 Bottles: 1 ml ea.	9/28/89
Immunotech Corp	Methamphetamine-ALK Phos Cat. No. 614; 50 units	Bottle: 10ml	3/12/90
Immunotech Corp	Methamphetamine-HRP Cat. No. 615; 50 units	Bottle: 10 ml	3/12/90
Immunotech Corp	Micro Dau Amphetamine Enzyme Immunoassay Test Kit	Kit: 96 tests, Bottle: 10.5 ml, 2 ml.	9/28/89
Immunotech Corp	Micro Dau Benzodiazepine Enzyme Immunoassay Test Kit	Kit: 96 tests, Bottle: 10.5 ml, 2 ml.	9/28/89
Immunotech Corp	Micro Dau Cocaine Metabolite Enzyme Immunoassay Test Kit	Kit: 96 tests, Bottle: 10.5 ml, 2 ml.	9/28/89
Immunotech Corp	Micro Dau Opiates Enzyme Immunoassay Test Kit	Kit: 96 tests	12/19/89
Immunotech Corp	Micro Dau PCP Enzyme Immunoassay Kit Cat. No. 175	Kit: 96 tests	7/11/90
Immunotech Corp	Micro Dau THC Enzyme Immunoassay Test Kit Cat. No. 173	Kit: 96 tests	7/11/90
Immunotech Corp	Morphine Positive Urine Calibrator	Vial: 3.5 ml	12/19/89
Immunotech Corp	Morphine-ALK Phos Cat. No. 610; 50 units, 300 units	Bottle: 10ml	3/12/90
Immunotech Corp	Morphine-HRP Cat. No. 611; 50 units, 300 units	Bottle: 10ml	3/12/90
Immunotech Corp	Opiates Enzyme Conjugate	Vial: 10 ml	12/19/89
Immunotech Corp	Oxazepam Enzyme Conjugate	Bottle: 10.5ml	9/28/89
Immunotech Corp	Oxazepam Positive Urine Calibrator	Bottle: 2ml	9/28/89
Immunotech Corp	Oxazepam-ALK Phos Cat. No. 606; 50 units	Bottle: 10ml	3/12/90
Immunotech Corp	Oxazepam-HRP Cat No. 608; 50 units	Bottle: 10ml	3/12/90
Immunotech Corp	PCP Enzyme Conjugate Cat. No. 375	Vial: 20ml	7/11/90
Immunotech Corp	PCP Positive Urine Calibrator Cat. No. 418	Vial: 3ml	7/11/90
Immunotech Corp	Phenobarbital Enzyme Conjugate	Bottle: 10.0ml	9/28/89
Immunotech Corp	Phenobarbital Serum Standard: 3ug/ml, 10ug/ml, 30ug/ml, 80ug/ml.	4 Bottles: 1ml each	9/28/89
Immunotech Corp	THC Enzyme Conjugate Cat. No. 373	Vial: 20ml	7/11/90
Immunotech Corp	THC Positive Urine Calibrator Cat No. 416 50ng/ml, 417 100ng/ml.	Vial: 3ml	7/11/90
Industrial Analytical Laboratory, Inc.	11-Nor-Carboxy-Delta-9-Tetrahydrocannabinol	Ampule: 1ml	9/04/85
Industrial Analytical Laboratory, Inc.	11-hydroxy-delta-9-tetrahydrocannabinol	Ampule: 1 ml	2/18/87
Industrial Optical	Opti-Kleen	Bottle: 5 gallon	6/24/81
International BioClinical, Inc	Innofluor Phenobarbital Calibrators 0.0, 3.0, 8.0, 20.0, 40.0, and 80.0 mcg/ml.	Bottle: 3 ml	7/9/87
International BioClinical, Inc	Phenobarbital Stock Tracer	Vial: 5 ml	9/23/87
International Technidyne Corp	Hemochron Control Plasma Quality Control Test Kit	Kit: 18 Tests; Test tube: 9ml; Vial: 5ml.	3/11/91
JRH Biosciences	HH4 Cell Culture Media	Bulk Plastic Bag: 20, 10, 1L	5/11/95
Janssen Pharmaceutica, Inc	3H Alfentanil	Vial: 0.5 ml	2/1/87
Janssen Pharmaceutica, Inc	3H Fentanyl	Vial: 0.5 ml	2/1/87
Janssen Pharmaceutica, Inc	3H Sufentanil	Vial: 0.5 ml	2/1/87
Janssen Pharmaceutica, Inc	Alfentanil Radioimmunoassay Kit	Kit: 200 tests	5/13/85
Janssen Pharmaceutica, Inc	Fentanyl Radioimmunoassay Kit	Kit: 200 tests	5/13/85
Janssen Pharmaceutica, Inc	Sufentanil Radioimmunoassay Kit	Kit: 500 tests	5/13/85
Kallestad Diagnostics	Barbital Buffer 901	Vial	5/19/81
Kallestad Diagnostics	IEP Buffer No. 900	Vial: 7 Dram	12/26/78
Kallestad Diagnostics	Immunoelectrofilm Catalog No. 910	1 Film Sealed in Cardboard Container.	3/11/80
Kallestad Diagnostics	Immunoelectrofilms, Catalog No. 1013	Styrofoam Container: 25 film	6/22/87
Kallestad Diagnostics	Immunoelectrophoresis Reagent Kit, Catalog No. 1012	Kit: 3 Vials	6/22/87
Kallestad Diagnostics	Quanticoat 125I–T3 Uptake Kit Catalog No. 823	Kit: 400 Determinations	12/16/85
Kallestad Diagnostics	Quanticoat 125I–T3 Uptake Kit, Catalog No. 833	Kit: 100 tests	6/24/81
Kallestad Diagnostics	Quanticoat 125I–T3 Uptake Reagent Catalog No. 785	Bottle: 500ml	12/16/85
Kallestad Diagnostics	Quanticoat 125I-T3 Uptake Reagent No. 834	2 Glass Bottles: 110ml	6/24/81

EXEMPT CHEMICAL PREPARATIONS—Continued

Supplier	Product name	Form	Date
LIfe Technologies, Inc	AmnioMax-C100 Second Dilution	Bottle: 1L	2/17/94
LKB Instruments, Inc	Tris-barbiturate Buffer pH 8.6	Packet: each 6.788 g. 20 packets/box.	5/15/78
Lemmon Company	Etorphine Standard Solution	Plastic Carboy: 1 Liter	10/31/83
Life Technologies, Inc	AmnioMax-C100 First Dilution	Bottle: 1L	2/17/94
Life Technologies, Inc	AmnioMax-C100 Stock Solution	Bottle: 1L	2/17/94
Life Technologies, Inc	AmnioMax-C100 Supplement	Bottle: 15ml, 60ml, 75ml, 100ml.	2/17/94
Life Technologies, Inc	Testosterone Stock Solution	Bottle: 1L	10/4/94
MCI Biomedical	IEP Buffer, pH 8.2, 0.04 Ionic Strength	Package: 6.510 grams	8/28/72
Mallinckrodt Chemical, Inc	Naloxone/6-Beta Naltrexol	Bottle: 60ml	10/6/94
Mallinckrodt Chemical, Inc	Naltrexone/6-beta Naltrexol Standard Solution	Bottle: 60ml	10/4/94
Materials & Technology Systems.	5-Ethyl-5-(1 -Carboxy-N-Propyl) Barbituric Acid	Screw Cap Vial: 8ml	5/3/73
Materials & Technology Systems.	5-Ethyl-5-(1-Carboxy-N-Propyl)Barbituric Acid Bovine Serum Albumin or Rabbit Serum Albumin.	Vaccine Vial: 8ml	5/3/73
Materials & Technology Systems.	5-Ethyl-5-(1-Carboxy-N-Propyl)Barbituric Acid Sensitized RBC	Vaccine Vial: 8ml	5/3/73
Materials & Technology Systems.	Barbiturate Standard	Screwcap Vial: 10ml	9/17/76
Materials & Technology Systems.	Benzoylecgonine	Screw Cap Vial: 25mg and 100 mg.	4/18/74
Materials & Technology Systems.	Benzoylecgonine Standard	Screwcap Vial: 10ml	9/17/76
Materials & Technology Systems.	Carboxymethylmorphine	Screw Cap Vial: 8ml	5/3/73
Materials & Technology Systems.	Carboxymethylmorphine Bovine Serum Albumin or Rabbit Serum Albumin.	Vaccine Vial: 8ml	5/3/73
Materials & Technology Systems.	Carboxymethylmorphine Sensitized RBC	Vaccine Vial: 50ml	5/3/73
Materials & Technology Systems.	Ecgonine Bovine Serum Albumin or Rabbit Serum Albumin	Vaccine Vial: 8ml	5/3/73
Materials & Technology Systems.	Ecgonine Sensitized RBC	Vaccine Vial: 50ml	5/3/73
Materials & Technology Systems.	Methadone Standard	Screwcap Vial: 10ml	9/17/76
Materials & Technology Systems.	Morphine Standard	Screw Cap Vial: 10ml	7/17/73
Materials & Technology Systems.	Tropinecarboxylic Acid	Screw Cap Vial: 8ml, 10ml	5/3/73
McGean-Rocho, Inc	Chloral Solution Denatured	Plastic container; 1, 5, 55 Gallons.	1/11/91
McGean-Rocho, Inc	Reflexion Semi-Bright B	Plastic container; 1, 5, 55 Gallons.	1/11/91
McGean-Rocho, Inc	Reflexion Semi-Bright S	Plastic container; 1, 5, 55 Gallons.	1/11/91
Medi-Chem, Inc	Barbiturate Test Set (Sodium Secobarbital Standard 10mg % w/v) Catalog No.250.	Bottle: 120ml	2/22/74
Medical Analysis Systems, Inc	ACE II Calibrator for the DuPont aca Level 1	Glass Vial: 2238mm, 5ml	8/7/86
Medical Analysis Systems, Inc	ACE II Calibrator for the DuPont aca Level 2	Glass Vial: 2238mm, 5ml	8/7/86
Medical Analysis Systems, Inc	ACE II Calibrator for the DuPont aca Level 3	Glass Vial: 2238mm, 5ml	8/7/86
Medical Analysis Systems, Inc	Amobarbital, #117 Intermediate Solution	Bottle: 10–100ml	10/22/93
Medical Analysis Systems, Inc	Benzoylecgonine, #432 Intermediate Solution	Bottle: 10–250ml	10/22/93
Medical Analysis Systems, Inc	Benzoylecgonine, #483 Intermediate Solution	Bottle: 10–100ml	10/22/93
Medical Analysis Systems, Inc	Benzoylecgonine, #719 Intermediate Solution	Bottle: 10–1800ml	10/22/93
Medical Analysis Systems, Inc	Butalbital, #429 Intermediate Solution	Bottle: 10–100ml	10/22/93
Medical Analysis Systems, Inc	CHALLENGE Liquid Therapeutic Drug Linearity Controls	Kit: 10 Bottles	1/24/91
Medical Analysis Systems, Inc	CHALLENGE Liquid Therapeutic Drug Linearity Controls TD1 A–E; TD2 A–E.	Glass Bottles: 5ml; 1 Set: 5 Bottles.	1/24/91
Medical Analysis Systems, Inc	Chemistry Control Assayed, Level 1, 2, & 3	Vial: 15ml	4/30/85
Medical Analysis Systems, Inc	Chemistry Control, Level 1, 2, & 3	Vial: 15ml	4/30/85
Medical Analysis Systems, Inc	Clonazepam, #473 Intermediate Solution	Bottle: 50–500ml	10/22/93
Medical Analysis Systems, Inc	Codeine, #435 Intermediate Solution	Bottle: 10–100ml	10/22/93
Medical Analysis Systems, Inc	D-Amphetamine, #423 Intermediate Solution	Bottle: 10–250ml	10/22/93
Medical Analysis Systems, Inc	D-Methamphetamine, #422 Intermediate Solution	Bottle: 10–250ml	10/22/93
Medical Analysis Systems, Inc	DOA Calibrator 1, #1921 Bulk Solution	Bottle: 10–100L	10/22/93
Medical Analysis Systems, Inc	DOA Calibrator 2, #1922 Bulk Solution	Bottle: 10–100L	10/22/93
Medical Analysis Systems, Inc	DOA Calibrator 2, #C38979 Bulk Solution	Bottle: 10–100L	10/22/93
Medical Analysis Systems, Inc	DOA Calibrator 3, #C38978 Bulk Solution	Bottle: 10–100L	10/22/93
Medical Analysis Systems, Inc	DOA Calibrator 4, #C38980 Bulk Solution	Bottle: 10–100L	10/22/93
Medical Analysis Systems, Inc	DOA Calibrator 4, #C38980P Pilot Solution	Bottle: 20–300L	10/22/93
Medical Analysis Systems, Inc	DOA Control 2, #1912 Bulk Solution	Bottle: 20–200L	10/22/93

EXEMPT CHEMICAL PREPARATIONS—Continued

Supplier	Product name	Form	Date
Medical Analysis Systems, Inc	DOA Control 3, #1943 Bulk Solution	Bottle: 20–100L	10/22/93
Medical Analysis Systems, Inc	DOA Control 3, #1913 Bulk Solution	Bottle: 20–300L	10/22/93
Medical Analysis Systems, Inc	DOA Control 4, #1914 Bulk Solution	Bottle: 20–300L	10/22/93
Medical Analysis Systems, Inc	DOA Control 4, #1914P Pilot Solution	Bottle: .1–1L	10/22/93
Medical Analysis Systems, Inc	DOA Control 4, #1944 Bulk Solution	Bottle: 20–100L	10/22/93
Medical Analysis Systems, Inc	DOA Control 4, #1944P Pilot Solution	Bottle: .1–1L	10/22/93
Medical Analysis Systems, Inc	DOA Control G2, #1915 Bulk Solution	Bottle: 20–200L	10/22/93
Medical Analysis Systems, Inc	DOA Control G3, #1916 Bulk Solution	Bottle: 20–300L	10/22/93
Medical Analysis Systems, Inc	DOA Control G4, #1917 Bulk Solution	Bottle: 20–300L	10/22/93
Medical Analysis Systems, Inc	DOA Control G4, #1917P Pilot Solution	Bottle: .1–1L	10/22/93
Medical Analysis Systems, Inc	DOA Cutoff Control, #1946 Bulk Solution	Bottle: 1–10L	10/22/93
Medical Analysis Systems, Inc	DOA Cutoff Control, #1946P Pilot Solution	Bottle: .1–1L	10/22/93
Medical Analysis Systems, Inc	DOA High Control, #1945 Bulk Solution	Bottle: 1–10L	10/22/93
Medical Analysis Systems, Inc	DOA Liquid Drugs of Abuse Controls Level 2, 3, 4	Vial: 5ml, 18ml; Box: 6–8ml vials; Box: 8–5ml vials.	10/12/90
Medical Analysis Systems, Inc	DOA Low Cointrol, #1947 Bulk Solution	Bottle: 1–10L	10/22/93
Medical Analysis Systems, Inc	DOA Positive Control, #1924 Bulk Solution	Bottle: 10–100L	10/22/93
Medical Analysis Systems, Inc	DOA Positive Control, #1924P Pilot Solution	Bottle: .1–1L	10/22/93
Medical Analysis Systems, Inc	DOA Positive Control, #C38981 Bulk Solution	Bottle: 10–100L	10/22/93
Medical Analysis Systems, Inc	Diazepam, #430 Intermediate Solution	Bottle: 10–100ml	10/22/93
Medical Analysis Systems, Inc	Liquid Urine Control Level 1	Vial: 5 ml	4/03/87
Medical Analysis Systems, Inc	Liquimmune Immunoassay Control 1, #2300 Bulk Solution	Bottle: 40–100L	10/22/93
Medical Analysis Systems, Inc	Liquimmune Immunoassay Control 1, #2300P Pilot Solution	Bottle: .1–1L	10/22/93
Medical Analysis Systems, Inc	Liquimmune Immunoassay Control 2, #2301 Bulk Solution	Bottle: 20–300L	10/22/93
Medical Analysis Systems, Inc	Liquimmune Immunoassay Control 3, #2302 Bulk Solution	Bottle: 20–300L	10/22/93
Medical Analysis Systems, Inc	Liquimmune Immunoassay Control 3, #2302P Pilot Solution	Bottle: .1–1L	10/22/93
Medical Analysis Systems, Inc	Methadone, #438 Intermediate Solution	Bottle: 10–250ml	10/22/93
Medical Analysis Systems, Inc	Methaqualone, #439 Intermediate Solution	Bottle: 10–250ml	10/22/93
Medical Analysis Systems, Inc	Morphine Glucuronide, #433 Intermediate Solution	Bottle: 10–100ml	10/22/93
Medical Analysis Systems, Inc	Morphine, #434 Intermediate Solution	Bottle: 10–250ml	10/22/93
Medical Analysis Systems, Inc	Nordiazepam, #431 Intermediate Solution	Bottle: 10–250ml	10/22/93
Medical Analysis Systems, Inc	Pentobarbital, #426 Intermediate Solution	Bottle: 10–100ml	10/22/93
Medical Analysis Systems, Inc	Phencyclidine, #437 Intermediate Solution	Bottle: 10–100ml	10/22/93
Medical Analysis Systems, Inc	Phenobarbital, #418 Intermediate Solution	Bottle: 50–700ml	10/22/93
Medical Analysis Systems, Inc	Phenobarbital, #425 Intermediate Solution	Bottle: 10–100ml	10/22/93
Medical Analysis Systems, Inc	Phenobarbital, #745 Intermediate Solution	Bottle: 50–200ml	10/22/93
Medical Analysis Systems, Inc	Propoxyphene, #440 Intermediate Solution	Bottle: 10–250ml	10/22/93
Medical Analysis Systems, Inc	Secobarbital, #427 Intermediate Solution	Bottle: 10–250ml	10/22/93
Medical Analysis Systems, Inc	TDM Plus.XL Level I, II or III Unassayed Enhanced Liquid Drug Control.	Bottle: 5ml, Box: 6 bottles	9/5/90
Medical Analysis Systems, Inc	Testosterone, #748 Intermediate Solution	Bottle: 50–200ml	10/22/93
Medical Analysis Systems, Inc	Therapeutic Drug Monitoring Control 1, #1581 Bulk Solution	Bottle: 20–300L	10/22/93
Medical Analysis Systems, Inc	Therapeutic Drug Monitoring Control 2, #1582 Bulk Solution	Bottle: 20–300L	10/22/93
Medical Analysis Systems, Inc	Therapeutic Drug Monitoring Control 3, #1583 Bulk Solution	Bottle: 20–300L	10/22/93
Medical Analysis Systems, Inc	Therapeutic Drug Monitoring Control 3, #1583P Pilot Solution	Bottle: .1–1L	10/22/93
Medical Analysis Systems, Inc	Transfer Pilot Material Calibrators; Levels 2, 3, 4, 5	Glass vial: 3–5ml	7/29/94
Medical Analysis Systems, Inc	Transfer Pilot Material Controls; Negative QC and Positive QC	Glass vial: 3–5ml	7/29/94
Medical Analysis Systems, Inc	Tri-Point LiquImmune Ligand Control, Levels 1, 2 and 3	Glass Bottle: 5ml; Kit: 6 Bottles	10/23/91
Medical Analysis Systems, Inc	Tri-Point LiquImmune Ligand Control, Levels 1, 2 and 3	Glass Bottle: 5ml; Kit: 6 bottles	10/23/91
Medical Analysis Systems, Inc	chemTRAK Liquid Unassayed Therapeuitic Drug Control Level 2.	Kit: 65ml Vials	10/8/86
Medical Analysis Systems, Inc	chemTRAK Liquid Unassayed Therapeutic Drug Control Level 3.	Kit: 65ml Vials	10/8/86
Medical Analysis Systems, Inc	chemTRAK Liquid Unassayed Therapeutic Drug Control Level I.	Kit: 65ml Vials	10/8/86
Medical Analysis Systems, Inc	chemTrak Liquid Unassayed	Vial: 15ml	4/30/85
Meloy Labs, Inc	Counterelectrophoresis Plates, G–301	Plates: 10 determinations	9/5/73
Meloy Labs, Inc	Immunoelectrophoresis Plates, G–201	Plates: 6 / unit	9/5/73
Merck and Co., Inc	Amphetamine - d6 HCl, Cat. No. MD–3892	Ampule: 2 or 5ml	8/30/89
Merck and Co., Inc	Cocaine-d3 HCl Catalog # MD–3677	Ampule: 2 or 5ml	6/13/88
Merck and Co., Inc	Codeine - d3 H2O (N-methyl-d3) No. MD–3776	2ml, 5ml ampule Carton: 5 ampules.	9/6/88
Merck and Co., Inc	Codeine-d3 Catalog # MD–3678	Ampule: 2 or 5ml	6/13/88
Merck and Co., Inc	DL-1 Phenyl-2-aminopropane 1, 1, 2, 3, 3, 3, -d6 (Amphetamine-d6) Catalog # MD–3682.	Ampule: 2 or 5ml	6/13/88
Merck and Co., Inc	DL-1 Phenyl-2-methylaminopropane-1, 1, 2, 3, 3, 3-d6 HCl (Methamphetamine d6) Catalog # MD–3683.	Ampule: 2 or 5ml	6/13/88
Merck and Co., Inc	DL-1-Phenyl-2-aminopropane-1, 1, 2, 3, 3, 3-d6 HCL No. MD–3778.	2ml, 5ml amber ampule Carton: 5 ampules.	9/6/88
Merck and Co., Inc	Ecgonine - d3 Methyl Ester HCl Catalog # MD– 3679	Ampule: 2 or 5ml	6/13/88
Merck and Co., Inc	Methamphetamine - d9 HCl, Cat. No. MD–3853	Ampule: 2 or 5ml	8/30/89

EXEMPT CHEMICAL PREPARATIONS—Continued

Supplier	Product name	Form	Date
Merck and Co., Inc	Morphine - d3 HCl 3H20 (N-methyl-d3) No. MD–3777	2ml, 5ml ampule Carton: 5 ampules.	9/6/88
Merck and Co., Inc	Morphine - d3 HCl Catalog # MD–3680	Ampule: 2 or 5 ml	6/13/88
Merck and Co., Inc	O-Benzoylecgonine-d3 Catalog # MD–3676	Ampule: 2 or 5 ml	6/13/88
Merck and Co., Inc	Phen-d5-cyclidine HCl Catalog # MD–3681	Ampule: 2 or 5 ml	6/13/88
Microdiagnostics, Inc	Amphetamine Bulk Tracer	Tube: 1ml; Bottle: 10ml, 100ml, 500ml.	1/17/96
Microdiagnostics, Inc	Amphetamine Enzyme Conjugate	Bottle: 10ml	12/24/92
Microdiagnostics, Inc	Benzoylecgonine Bulk Tracer	Tube: 1ml; Bottle: 10ml, 100ml, 500ml.	1/17/96
Microdiagnostics, Inc	Cocaine Enzyme Conjugate	Bottle: 10ml	12/24/92
Microdiagnostics, Inc	EIA for Amphetamine Metabolites	Kit: 2 bottles	12/24/92
Microdiagnostics, Inc	EIA for Cocaine Metabolites	Kit: 2 bottles	12/24/92
Microdiagnostics, Inc	EIA for Marijuana Metabolites	Kit: 2 bottles	12/24/92
Microdiagnostics, Inc	EIA for Opiate Metabolites	Kit: 2 bottles	12/24/92
Microdiagnostics, Inc	EIA for PCP Metabolites	Kit: 2 bottles	12/24/92
Microdiagnostics, Inc	Morphine Bulk Tracer	Tube: 1ml; Bottle: 10ml, 100ml, 500ml.	1/17/96
Microdiagnostics, Inc	Opiate Enzyme Conjugate	Bottle: 10ml	12/24/92
Microdiagnostics, Inc	PCP Enzyme Conjugate	Bottle: 10ml	12/24/92
Microdiagnostics, Inc	Phencyclidine Bulk Tracer	Tube: 1ml; Bottle: 10ml, 100ml, 500ml.	1/17/96
Microdiagnostics, Inc	Positive Amphetamine Standard	Bottle: 2ml	12/24/92
Microdiagnostics, Inc	Positive Cocaine Standard	Bottle: 2ml	12/24/92
Microdiagnostics, Inc	Positive Opiate Standard	Bottle: 2ml	12/24/92
Microdiagnostics, Inc	Positive PCP Standard	Bottle: 2ml	12/24/92
Microdiagnostics, Inc	Positive THC Standard	Bottle: 2ml	12/24/92
Microdiagnostics, Inc	THC Enzyme Conjugate	Bottle: 10ml	12/24/92
Microdiagnostics, Inc	Tetrahydrocannabinol Bulk Tracer	Tube: 1ml; Bottle: 10ml, 100ml, 500ml.	1/17/96
Microgenics Corporation	4-Drug Barbiturate Spiking Solution	Carboy: 2L	12/1/93
Microgenics Corporation	4-Drug Cutoff Bulk Calibrator	Carboy: 6L	12/1/93
Microgenics Corporation	4-Drug High Bulk Calibrator	Carboy: 4L	12/1/93
Microgenics Corporation	4-Drug Intermediate Bulk Calibrator	Carboy: 4L	12/1/93
Microgenics Corporation	5-Drug Cutoff Bulk Calibrator	Carboy: 4L	12/1/93
Microgenics Corporation	Amphetamine ED Bulk Reagent	Carboy: 25L	4/13/94
Microgenics Corporation	Amphetamine Manufacturing Bulk Calibrators B, C, D, E, F, G, H, I, J, K, Open.	Carboy or Beaker: 4L	4/20/94
Microgenics Corporation	Amphetamine Manufacturing Calibrators B, C, D, E, F, G, H, I, J, K, Open.	Vial: 3.5 or 5.0ml	4/20/94
Microgenics Corporation	Amphetamine/Methamphetamine Bulk Manufacturing Calibrator Open.	Carboy or Beaker: 4L	4/20/94
Microgenics Corporation	Amphetamine/Methamphetamine Manufacturing Calibrator Open.	Vial: 3.5 or 5.0ml	4/20/94
Microgenics Corporation	Amphetamines Spiking Solution	Carboy: 2L	12/1/93
Microgenics Corporation	Barbiturate Manufacturing Bulk Calibrators B, C, D, E, F, G, H, I, J, K, Open.	Carboy or Beaker: 4L	4/20/94
Microgenics Corporation	Barbiturate Spiking Solution	Carboy: 2L	12/1/93
Microgenics Corporation	Barbiturate/Benzodiazepine 200 Cutoff Calibrator	Carboy: 4L	12/1/93
Microgenics Corporation	Barbiturate/Benzodiazepine 300 Cutoff Calibrator	Carboy: 2L	12/1/93
Microgenics Corporation	Barbiturate/Benzodiazepine High Bulk Calibrator	Carboy: 2L	12/1/93
Microgenics Corporation	Barbiturate/Benzodiazepine Intermediate Bulk Calibrator	Carboy: 2L	12/1/93
Microgenics Corporation	Barbiturates Manufacturing Calibrators B, C, D, E, F, G, H, I, J, K, Open.	Vial: 3.5 or 5.0ml	4/20/94
Microgenics Corporation	Benzodiazepine Ethanol Stock	Vial: 25ml	12/1/93
Microgenics Corporation	Benzodiazepine Manufacturing Bulk Calibrators B, C, D, E, F, G, H, I, J, K, Open.	Carboy or Beaker: 4L	4/20/94
Microgenics Corporation	Benzodiazepine Manufacturing Calibrators B, C, D, E, F, G, H, I, J, K, Open.	Vial: 3.5 or 5.0ml	4/20/94
Microgenics Corporation	Benzodiazepine Spiking Solution	Carboy: 2L	12/1/93
Microgenics Corporation	Bulk Calibrator Solution 80ug/ml, 40ug/ml	Carboy: 10L	11/13/90
Microgenics Corporation	CEDAI DAU Opiate Assay Cat # 80–3000	Kit: 4 Bottles, 500ml	12/1/93
Microgenics Corporation	CEDIA DAU 4-Drug Cutoff Calibrator	Bottle: 10, 15ml	12/1/93
Microgenics Corporation	CEDIA DAU 4-Drug High Calibrator	Bottle: 10, 15ml	12/1/93
Microgenics Corporation	CEDIA DAU 4-Drug Intermediate Calibrator	Bottle: 10, 15ml	12/1/93
Microgenics Corporation	CEDIA DAU 5-Drug Cutoff Calibrator	Bottle: 5, 15ml	12/1/93
Microgenics Corporation	CEDIA DAU Amphetamine Assay (For 85ml, 500ml)	Kit: 4 Bottles	4/13/94
Microgenics Corporation	CEDIA DAU Amphetamine ED Reagent	Vial: 100ml, 500ml	4/13/94
Microgenics Corporation	CEDIA DAU Barb/Benz 200 Calibrator	Bottle: 10, 15ml	12/1/93
Microgenics Corporation	CEDIA DAU Barb/Benz 300 Calibrator	Bottle: 10, 15ml	12/1/93
Microgenics Corporation	CEDIA DAU Barb/Benz High Calibrator	Bottle: 10, 15ml	12/1/93
Microgenics Corporation	CEDIA DAU Barb/Benz Intermediate Calibrator	Bottle: 10, 15ml	12/1/93

EXEMPT CHEMICAL PREPARATIONS—Continued

Supplier	Product name	Form	Date
Microgenics Corporation	CEDIA DAU Cocaine Assay Cat # 80–2300	Kit: 4 Bottles, 85ml	12/1/93
Microgenics Corporation	CEDIA DAU Cocaine Assay Cat # 80–2400	Kit: 4 Bottles, 500ml	12/1/93
Microgenics Corporation	CEDIA DAU Cocaine ED Reagent, Cat # 80–2300	Vial: 100ml	12/1/93
Microgenics Corporation	CEDIA DAU Cocaine ED Reagent, Cat # 80–2400	Vial: 500ml	12/1/93
Microgenics Corporation	CEDIA DAU Multi-Drug Control Set, #80–0120	2 Vials; 5ml/vial	5/10/94
Microgenics Corporation	CEDIA DAU Multi-Level THC Assay Cat # 80–2700	Kit: 4 Bottles, 85ml	12/1/93
Microgenics Corporation	CEDIA DAU Multi-Level THC Assay Cat # 80–2800	Kit: 4 Bottles, 500ml	12/1/93
Microgenics Corporation	CEDIA DAU Multi-Level THC ED Reagent, Cat # 80–2700	Vial: 100ml	12/1/93
Microgenics Corporation	CEDIA DAU Multi-Level THC ED Reagent, Cat # 80–2800	Vial: 500ml	12/1/93
Microgenics Corporation	CEDIA DAU Multi-grug Control Set, #80–0124	2 Vials; 15ml/vial	5/10/94
Microgenics Corporation	CEDIA DAU Opiate Assay Cat # 80–2900	Kit: 4 Bottles, 85ml	12/1/93
Microgenics Corporation	CEDIA DAU Opiate ED Reagent, Cat # 80–2900	Vial: 100ml	12/1/93
Microgenics Corporation	CEDIA DAU Opiates ED Reagent, Cat # 80–3000	Vial: 500ml	12/1/93
Microgenics Corporation	CEDIA DAU PPX/METD Cutoff Calibrator	Vial: 10ml	3/2/95
Microgenics Corporation	CEDIA DAU PPX/METD High Calibrator	Vial: 10ml	3/2/95
Microgenics Corporation	CEDIA DAU PPX/METD Intermediate Calibrator	Vial: 10ml	3/2/95
Microgenics Corporation	CEDIA DAU Specialty Control Set 1, #80–0121	2 Vials; 15ml/vial	5/10/94
Microgenics Corporation	CEDIA DAU Specialty Control Set 2, #80–0122	2 Vials; 15ml/vial	5/10/94
Microgenics Corporation	CEDIA DAU THC 100ng/ml Calibrator	Bottle: 15ml	12/1/93
Microgenics Corporation	CEDIA DAU THC 150ng/ml Calibrator	Bottle: 15ml	12/1/93
Microgenics Corporation	CEDIA DAU THC 25ng/ml Calibrator	Bottle: 15ml	12/1/93
Microgenics Corporation	CEDIA DAU THC 50ng/ml Calibrator	Bottle: 15ml	12/1/93
Microgenics Corporation	CEDIA DAU THC 75ng/ml Calibrator	Bottle: 15ml	12/1/93
Microgenics Corporation	Cocaine Conjugate	Vial: 25ml	12/1/93
Microgenics Corporation	Cocaine ED Bulk Reagent	Carboy: 25L	12/1/93
Microgenics Corporation	Cocaine Manufacturing Bulk Calibrators B, C, D, E, F, G, H, I, J, K, Open.	Carboy or Beaker: 4L	4/20/94
Microgenics Corporation	Cocaine Manufacturing Calibrators B, C, D, E, F, G, H, I, J, K, Open.	Vial: 3.5 or 5.0ml	4/20/94
Microgenics Corporation	Cocaine Spiking Solution	Carboy: 2L	12/1/93
Microgenics Corporation	In-house Phenobarbital Bulk Primary Standard 40ug/ml, 80ug/ml.	Bottle: 2L	11/13/90
Microgenics Corporation	In-house Phenobarbital Primary Standard 40ug/ml, 80ug/ml	Micro tube: 1.5ml; Box: 100 tubes.	11/13/90
Microgenics Corporation	In-house manufacturing Bulk Calibrator 10ug/ml, 20ug/ml, 40 ug/ml, 60ug/ml, 80ug/ml, 90ug/ml Phenobarbital.	Bottle: 2L	11/13/90
Microgenics Corporation	In-house manufacturing Calibrator 10ug/ml, 20ug/ml, 40ug/ml, 60ug/ml80ug/ml, 90ug/ml Phenobarbital.	Vial: 3.5ml	11/13/90
Microgenics Corporation	Methadone Spiking Solution	Vial: 2L	3/2/95
Microgenics Corporation	Methamphetamine Conjugate	Vial: 25ml	4/13/94
Microgenics Corporation	Methamphetamine Manufacturing Bulk Calibrators B, C, D, E.F.G.H, I, J, K, Open.	Carboy or Beaker: 4L	4/20/94
Microgenics Corporation	Methamphetamine Manufacturing Calibrators B, C, D, E, F, G, H, I, J, K, Open.	Vial: 3.5ml or 5.0ml	4/20/94
Microgenics Corporation	Microgenics CEDIA Phenobarbital Assay 40ug/ml, 80ug/ml	Vial: 3.5ml; Kit: 2 vials	11/13/90
Microgenics Corporation	Morphine Conjugate	Vial: 25ml	12/1/93
Microgenics Corporation	Opiate ED Bulk Reagent	Carboy: 25L	12/1/93
Microgenics Corporation	Opiate Manufacturing Bulk Calibrators E, F, G, H, I, J, K, Open.	Carboy or Beaker: 4L	4/20/94
Microgenics Corporation	Opiate Manufacturing Calibrators E, F, G, H, I, J, K, Open	Vial: 3.5 or 5.0ml	4/20/94
Microgenics Corporation	Opiate Spiking Solution	Carboy: 2L	12/1/93
Microgenics Corporation	PCP Spiking Solution	Carboy: 2L	12/1/93
Microgenics Corporation	PCP Stock Concentrate	Vial: 10ml	12/1/93
Microgenics Corporation	Phencyclidine Manufacturing Bulk Calibrators E, F, G, H, I, J, K, Open.	Carboy or Beaker: 4L	4/20/94
Microgenics Corporation	Phencyclidine Manufacturing Calibrators E, F, G, H, I, J, K, Open.	Vial: 3.5 or 5.0ml	4/20/94
Microgenics Corporation	Phenobarbital Stock Solution	Flask: 100ml	11/13/90
Microgenics Corporation	Propoxyphene/Methadone Cutoff Calibrator	Bulk: 4L	3/2/95
Microgenics Corporation	Propoxyphene/Methadone High Calibrator	Bulk: 4L	3/2/95
Microgenics Corporation	Propoxyphene/Methadone Intermediate Calibrator	Bulk: 4L	3/2/95
Microgenics Corporation	THC 100 Control Set	Box: 2 Bottles; 15ml each	6/30/94
Microgenics Corporation	THC 100 Controls (High & Low)	Bottle: 15ml	6/30/94
Microgenics Corporation	THC 100 Controls (High & Low) Bulk	Carboy: 150L	6/30/94
Microgenics Corporation	THC 100ng/ml Bulk Calibrator	Carboy: 4L	12/1/93
Microgenics Corporation	THC 150ng/ml Bulk Calibrator	Carboy: 4L	12/1/93
Microgenics Corporation	THC 25 Control Set	Box: 2 Bottles; 15ml each	6/30/94
Microgenics Corporation	THC 25 Controls (High & Low)	Bottle: 15ml	6/30/94
Microgenics Corporation	THC 25 Controls (High & Low) Bulk	Carboy: 150L	6/30/94
Microgenics Corporation	THC 25ng/ml Bulk Calibrator	Carboy: 2L	12/1/93
Microgenics Corporation	THC 50 Control Set	Box: 2 Bottles; 15ml each	6/30/94
Microgenics Corporation	THC 50 Controls (High & Low)	Bottle: 15ml	6/30/94

EXEMPT CHEMICAL PREPARATIONS—Continued

Supplier	Product name	Form	Date
Microgenics Corporation	THC 50 Controls (High & Low) Bulk	Carboy: 150L	6/30/94
Microgenics Corporation	THC 50ng/ml Bulk Calibrator	Carboy: 4L	12/1/93
Microgenics Corporation	THC 75ng/ml Bulk Calibrator	Carboy: 1L	12/1/93
Microgenics Corporation	THC Conjugate	Vial: 25ml	12/1/93
Microgenics Corporation	THC ED Bulk Reagent	Carboy: 25L	12/1/93
Microgenics Corporation	THC Manufacturing Bulk Calibrators B, C, D, E, F, G, H, I, J, K, L, Open.	Carboy or Beaker: 4L	4/20/94
Microgenics Corporation	THC Manufacturing Calibrators B, C, D, E, F, G, H, I, J, K, L, Open.	Vial: 3.5 or 5.0ml	4/20/94
Micromedic Systems	Micromedic Neonatal T4 125I Tracer Solution	Nalgene Bottle: 4 oz	6/25/87
Micromedic Systems	Micromedic Neonatal T4 Elution Solution	Nalgene Bottle: 2 oz	6/25/87
Micromedic Systems	Neonatal T4 125I Tracer Solution	Vial: 30ml	5/21/80
Micromedic Systems	Neonatal T4 Buffer Solution	Bottle: 8ounce	5/21/80
Micromedic Systems	T3 RIA 125I Tracer Solution	Vial: 30ml	12/14/76
Micromedic Systems	T3 RIA Buffer Solution	High Density Polyethylene Bottle: 8 ounce.	12/14/76
Micromedic Systems	T3 Uptake 125I Tracer Solution	Vial: 30ml	12/14/76
Micromedic Systems	T3 Uptake Buffer Solution	High Density Polyethylene Bottle: 8 ounce.	12/14/76
Micromedic Systems	T4 RIA 125I Tracer Solution	Vial: 30ml	12/14/76
Micromedic Systems	T4 RIA Buffer Solution	High Density Polyethylene Bottle: 8 ounce.	12/14/76
Miles Inc	Immuno-1 Setpoint TDM Calibrators Kit No. T03–2864 Component No. T13–2864(02–06).	Glass Bottles: 5ml; Kit: 5 Bottles.	1/3/91
Miles Inc	Technicon Immuno 1 TESTpoint Ligand Controls, Kit No. T03–3393–01; Level I T13–3394–01; Level II T13–3395–01; Level III T13–3396–01.	Glass vial; 5ml; Kit: 6 vials	3/16/92
Miles Inc	Technicon RA Systems Set Point	Vial: 5ml Kit: 5 vials	7/20/90
Miles Laboratories, Inc	SERALYZER ARIS Phenobarbital Calibrator Kit, # 6453	Kit: 2 vials; 1ml/vial	4/29/93
Miles Laboratories, Inc	SERALYZER ARIS Phenobarbital Calibrator and Control Kit, # 6455T.	Kit: 4 vials; 1ml/vial	4/29/93
Miles Laboratories, Inc	SERALYZER ARIS Phenobarbital Control Kit, # 6454T	Kit: 2 vials; 1ml/vial	4/29/93
Miles Laboratories, Inc	SERALYZER ARIS Phenytoin Bulk Reagent Paper	Bulk	6/15/94
Miles Laboratories, Inc	Seralyzer ARIS Drug Assay Control	Vial: 1ml	1/17/84
Miles Laboratories, Inc	Seralyzer ARIS Drug Assay High Calibrator	Vial: 0.5ml	1/17/84
Miles Laboratories, Inc	Seralyzer ARIS Drug Assay Low Calibrator	Vial: 0.5ml	1/17/84
Miles Laboratories, Inc	Seralyzer ARIS Phenytoin Reagent Strips	Bottle Containing 25 and 50 Strips.	5/28/86
Miles Laboratories, Inc	T–4 Buffer	Glass Screwtop Vial: ¾ ounce	3/28/77
Monobind, Inc	Monobind T3 Antibody Reagent	Test Tube w/Cap: 70ml	11/8/77
Monobind, Inc	Monobind T3 Tracer Reagent	Wheaton Glass Container: 55ml.	11/8/77
Monobind, Inc	Monobind T4 Antibody Reagent	Test Tube w/Cap: 70ml	11/8/77
Monobind, Inc	Monobind T4 Tracer Reagent	Wheaton Glass Container 55ml.	11/8/77
Monobind, Inc	Monobind TSH Antibody Reagent	Test Tube w/Cap: 10.5ml	11/8/77
Monobind, Inc	Monobind TSH Non-Specific Buffer	Wheaton Glass: 1.05ml	11/8/77
Monobind, Inc	Monobind TSH Precipitating Reagent	Plastic Container w/Cap : 105ml.	11/8/77
Monobind, Inc	Monobind TSH Tracer Reagent	Wheaton Glass Container 10.5ml.	11/8/77
Monobind, Inc	T3 Adsorbent Reagent	Glass Bottle: 110ml, 50ml Plastic Bottle: 260ml.	5/15/78
Monobind, Inc	T3 Uptake Tracer Reagent	Glass Bottle: 55ml, 30ml Plastic Bottle: 125ml.	5/15/78
Monobind, Inc	TSH Radioimmunoassay Test System	Kit: 100 Tests	11/8/77
Monobind, Inc	Thyroxine Radioimmunoassay Test System	Kit: 100 Tests	11/8/77
Monobind, Inc	Triiodothyronine Radioimmunoassay Test System	Kit: 100 tests	11/8/77
Monoclonal Antibodies, Inc	Test Kit for Cocaine Metabolites in Urine	Kit: 50 tests	10/17/86
Monoclonal Antibodies, Inc	Test Kit for Opiates in Urine	Kit: 50 tests	10/17/86
Monoclonal Antibodies, Inc	Test Kit for Tetrahydrocannabinol (THC) in Urine	Kit: 50 tests	10/17/86
NSI Technology Services Corp	Alpha, alpha-dimethyl-phenethylamine	Amber Ampoule: 2ml	3/02/89
Nuclear Diagnostics, Inc	MAAT T3 Uptake Reagent	Bottle: 105ml, 210ml; Kit: 1 bottle 210ml.	11/16/90
Nuclear Diagnostics, Inc	SPINSEP–TBG Reagent Catalog No. 17100	Polypropylene Bottle: 105ml	12/15/77
Nuclear Diagnostics, Inc	TETRIA P.E.G. Antiserum Catalog No. 16100A	Polypropylene Bottle: 55ml	3/10/78
Nuclear Diagnostics, Inc	TETRIA P.E.G. Reagent Catalog No. 16100	Polypropylene Bottle: 105ml	7/8/77
Nuclear Diagnostics, Inc	TETRIA P.E.G. Reagent Catalog No. 16100R	Polypropylene Bottle: 55ml	3/10/78
Nuclear Diagnostics, Inc	TRIA–P.E.G. Antiserum Catalog No. 12100A	Polypropylene Bottle: 55ml	3/10/78
Nuclear Diagnostics, Inc	TRIA–P.E.G. Reagent Catalog No.12100R	Polypropylene Bottle: 55ml	3/10/78
OMI International Corporation	Compound N Solution	Steel Drum: 55 gallon	10/1/75
Organon Teknika Corp	Barbital Buffered Saline with Azide	Plastic Bottle: 1L	1/5/90

EXEMPT CHEMICAL PREPARATIONS—Continued

Supplier	Product name	Form	Date
Organon Teknika Corp	Modified Barbital Buffer	Plastic Bottle: 1L	1/5/90
Organon Teknika Corp	Owren's Veronal Buffer for FIBRIQUIK	Bottle: 37 ml	5/7/80
Organon Teknika Corp	Platelin	Vial: 7.3ml	3/13/72
Organon Teknika Corp	Simplastin	Vial: 4.7ml, 7.3ml, and 16.5ml	3/13/72
Organon Teknika Corp	Simplastin-A	Vial: 7.3ml	3/13/72
Organon Teknika Corp	TRIS/Barbital Buffer	Plastic Bottle: 1L	1/5/90
Ortho Diagnostic Systems, Inc	Activated ThromboFAX No.721000	Bottle: 3.2ml	9/21/71
Ortho Diagnostic Systems, Inc	ORTHO Owren's Buffer	Kit: 6-20 ml vials	8/26/88
Ortho Diagnostic Systems, Inc	Ortho Activated PTT Reagent	Glass Vial: 30 determination size, 100.	5/23/83
Ortho Diagnostic Systems, Inc	Ortho Plasma Coagulation Control Level I	Glass Vial: 5ml	10/25/83
Ortho Diagnostic Systems, Inc	Ortho Plasma Coagulation Control Level II	Glass Vial: 5ml	10/25/83
Ortho-McNeil Pharmaceutical	Codeine-N-Oxide	Bottle: 2ml	10/11/95
PB Diagnostic Systems, Inc	Estradiol Reagent	6 Vials; 1ml/vial	10/28/93
PB Diagnostic Systems, Inc	Estradiol Test Module	Plastic plate: 1.7''x .7''x 3.5''	10/28/93
PB Diagnostic Systems, Inc	OPUS Estradiol Kit	Kit: 50 Tests	10/28/93
PB Diagnostic Systems, Inc	OPUS Phenobarbital Calibrators: 5, 10, 20, 40, 80µg/ml	Vial: 2.5ml Carton: 5 vials	8/7/90
PB Diagnostic Systems, Inc	OPUS Phenobarbital Test Modules	Plastic Test Module, Tray: 5 modules, Carton: 50 modules.	8/7/90
Pacific Hemostasis	Barbital Buffered Saline	Vial: 100ml	5/24/84
Pacific Hemostasis	Barbital Buffered Saline (Bulk)	Carboy: 100L	10/5/94
Pacific Hemostasis	Barbital Buffered Saline with Heparin	Vial: 90ml	5/24/84
Pacific Hemostasis	Barbital Buffered Saline with Heparin (Bulk)	Carboy: 100L	10/5/94
Pacific Hemostasis	Barbital Buffered with Heparin	Bulk in Process	1/24/95
Pacific Hemostasis	Diluting Fluid	Bulk in Process	1/24/95
Pacific Hemostasis	Diluting Fluid	Vial: 20ml	5/24/84
Pacific Hemostasis	Diluting Fluid (Bulk)	Carboy: 100L	10/5/94
Pacific Hemostasis	Kontact	Bulk in Process	1/24/95
Pacific Hemostasis	Kontact	Vial: 4ml, 10ml	3/22/94
Pacific Hemostasis	Kontact (Bulk)	Carboy: 200L	10/5/94
Pacific Hemostasis	Kontact Kit (10ml) Cat # 224-006	Kit: 10 Vials	3/22/94
Pacific Hemostasis	Kontact Kit (4ml) Cat # 257-324	Kit: 10 Vials	3/22/94
Pantex	Immuno T3 Kit: (1)L-Triiodothyronine 125I (2)1st Antiserum (3)2nd Antiserum (4)Diluent (5)Standards.	Kit Containing Bottles: (1)10ml (2)10ml (3)50ml (4)5ml (5)3ml.	1/4/79
Pantex	Immuno-Digoxin Kit Containing: (1)Digoxin 125I (2)1st Antiserum (3) 2nd Antiserum (4)Diluent.	Kit Containing Bottles: (1)10ml (2)20ml (3)50ml (4)5ml.	1/4/79
Pantex	Immuno-Estriol 125I Kit: 2nd Antiserum	Bottle: 50ml	1/4/79
Pantex	Immuno-Estriol Kit: (1)Estriol 3H RIA (2)Estriol 3H Recovery (3)1st Antiserum (4)2nd Antiserum (5)Diluent (6)Buffer (7)Standards.	Kit Containing Bottles: (1)10ml (2)5ml (3)10ml (4)20ml (5)100ml (6)50ml (7)5ml.	1/4/79
Pantex	Immuno-T4 Kit: (1)Thyroxine 125I (2)1st Antiserum (3)2nd Antiserum (4)Diluent (5)Standards.	Kit Containing Bottles: (1)100ml, 1000ml (2)50ml (3)100ml (4)5ml (5)3ml.	1/4/79
Pantex	Immuno-Testosterone 125I Kit: (1)Testosterone 125I (2)1st Antiserum (3)2nd Antiserum (4)Diluent (5)Standards.	Kit Containing Bottles: (1)10ml (2)10ml (3)50ml (4)100ml (5)5ml.	1/4/79
Pantex	T3 Uptake Kit: L-Triiodothyronine 125I	Bottle: 100ml, 1000ml	1/4/79
Perkin-Elmer Corporation	Amphetamine Polarization Fluoroimmunoassay Kit	Kit: 100 tests	12/18/86
Perkin-Elmer Corporation	Barbiturates Polarization Fluoroimmunoassay Kit	Kit: 100 tests	12/18/86
Perkin-Elmer Corporation	Cocaine Polarization Fluoroimmunoassay Kit	Kit: 100 tests	12/18/86
Perkin-Elmer Corporation	Methadone Polarization Fluoroimmunoassay Kit	Kit: 100 tests	12/18/86
Perkin-Elmer Corporation	Morphine Polarization Fluoroimmunoassay Kit	Kit: 100 tests	12/18/86
Perkin-Elmer Corporation	Opiates Polarization Fluoroimmunoassay Kit	Kit: 100 tests	12/18/86
Princeton Separations, Inc	Panagel 16	Pouch: 1 slide	6/29/87
Princeton Separations, Inc	Panagel 8	Pouch: 1 slide	6/29/87
Princeton Separations, Inc	Panagel Electrobuffer	Fiber Drum: 25 kg	6/29/87
Princeton Separations, Inc	Panagel Electrode Buffer	Pouch: 18.3 gms	6/29/87
Princeton Separations, Inc	Panagel LD Isoenzyme Electrode Buffer	Pouch: 11.85 gms	6/29/87
Princeton Separations, Inc	Panagel LD Isoenzyme Slide	Pouch: 1 slide	6/29/87
Quality Assurance Service Corp	Q.A. Toxicology Blood Controls	Vial: 6ml, 12ml Plastic Bottle: 60ml, 90ml, 250ml, 625ml Glass Bottle: 6ml–100ml.	1/23/90
Quality Assurance Service Corp	Q.A. Toxicology Serum Controls	Vial: 6ml, 12ml Plastic Bottle: 60ml, 90ml, 250ml, 625ml Glass Bottle: 6ml–100ml.	1/23/90
Quality Assurance Service Corp	Q.A. Toxicology Urine Controls	Vial: 6ml, 12ml Plastic Bottle: 60ml, 90ml, 250ml, 625ml Glass Bottle: 6ml–100ml.	1/23/90
Quantimetrix	Quantimetrix Anticonvulsant Serum Drug Control, Liquid Level II Control No. 17–0303–2.	Polyethylene Dropper Bottle: 15ml.	4/16/86

EXEMPT CHEMICAL PREPARATIONS—Continued

Supplier	Product name	Form	Date
Quantimetrix	Quantimetrix Antidepressant Serum Drug Control, Liquid Level I Control No. 17–0303–1.	Polyethylene Dropper Bottle: 15ml.	4/16/86
Quantimetrix	Quantimetrix Antidepressant Serum Drug Control, Liquid Level I Control No. 17–0305–1.	Polyethylene Dropper Bottle: 15ml.	4/16/86
Quantimetrix	Quantimetrix Antidepressant Serum Drug Control, Liquid Level II Control No. 17–0305–2.	Polyethylene Dropper Bottle: 15ml.	4/16/86
Quantimetrix	Urine Drugs of Abuse Control Catalog No. 12–2411–1	Dropper Bottle: 15 ml	2/23/87
Quin-Tec, Inc	Additive SB–1	Drum: 55 gals	5/11/87
Quin-Tec, Inc	Quin-Tec Brightener 402	Plastic Pail: 5 gallons, Plastic Drum: 55 gallons.	10/13/81
Quin-Tec, Inc	Quin-Tec Brightener 404	Plastic Pail: 5 gallons, Plastic Drum: 55 gallons.	10/13/81
Radian Corporation	(+/−) 11-Nor-9-Carboxy-delta 9-THC-D9 0.01mg/ml, 0.1mg/ml, 1.0mg/ml.	Vial: 2ml	6/12/91
Radian Corporation	(−)-11-Nor-9-carboxy-delta-9 THC; 1.0mg/ml, 100µg/ml	Vial: 2ml	1/25/95
Radian Corporation	17alpha-Methyl-5alpha-androstane-3alpha, 17beta-diol, 100µg/ml, 1mg/ml.	Ampule: 2ml	7/07/95
Radian Corporation	17alpha-Methyl-5beta-androstane-3alpha, 17beta-diol, 100µg/ml, 1mg/ml.	Ampule: 2ml	7/07/95
Radian Corporation	2–S Methcathinone-D5 HCl 100µg/ml, 1.0mg/ml	Ampule: 2ml	12/22/93
Radian Corporation	2R-Cathinone HCL 100µg/ml, 1.0mg/ml	Ampule: 2ml	12/22/93
Radian Corporation	2R-Cathinone-D5 HCL 100µg/ml, 1.0mg/ml	Ampule: 2ml	12/22/93
Radian Corporation	2R-Methcathinone HCL 100µg/ml, 1.0mg/ml	Ampule: 2ml	12/22/93
Radian Corporation	2R-Methcathinone-D5 HCL 100µg/ml, 1.0mg/ml	Ampule: 2ml	12/22/93
Radian Corporation	2S-Cathinone HCL 100µg/ml, 1.0mg/ml	Ampule: 2ml	12/22/93
Radian Corporation	2S-Cathinone-D5 HCL 100µg/ml, 1.0mg/ml	Ampule: 2ml	12/22/93
Radian Corporation	2S-Methcathinone HCL 100µg/ml, 1.0mg/ml	Ampule: 2ml	12/22/93
Radian Corporation	3′-Hydroxystanozolol–D3; 100µg/ml, 1.0mg/ml	Ampule: 2ml	6/06/94
Radian Corporation	3′–Hydroxystanozolol; 100µg/ml, 1.0mg/ml	Ampule: 2ml	6/06/94
Radian Corporation	3, 4-Methylenedioxy-amphetamine-D5 0.1 mg/ml	2 ml amber ampule	10/19/88
Radian Corporation	3, 4-Methylenedioxy-amphetamine-D5 1.0 mg/ml	2 ml amber ampule	10/19/88
Radian Corporation	3, 4-Methylenedioxy-methamphetamine-D5 0.1 mg/ml	2 ml amber ampule	10/19/88
Radian Corporation	3, 4-Methylenedioxy-methamphetamine-D5 1.0 mg/ml	2 ml amber ampule	10/19/88
Radian Corporation	3, 4-Methylenedioxyamphetamine 0.1, 1.0 mg/ml	Amber glass ampule: 2ml	1/12/89
Radian Corporation	3, 4-Methylenedioxymethamphetamine 0.1, 1.0 mg/ml	Amber glass ampule: 2ml	1/12/89
Radian Corporation	4-Methylaminorex 100µg/ml, 1.0mg/ml	Ampule: 2ml	1/29/93
Radian Corporation	4-Methylaminorex-D5 100µg/ml, 1.0mg/ml	Ampule: 2ml	1/29/93
Radian Corporation	6-Acetylmorphine	Ampule: 2 ml	12/4/87
Radian Corporation	6-Acetylmorphine-D3	Ampule: 2 ml	12/4/87
Radian Corporation	6-Acetylmorphine-D6; 100µg/ml, 1.0mg/ml	Ampule: 2ml	4/25/94
Radian Corporation	6beta-Hydroxyfluoxymesterone, 100µg/ml, 1mg/ml	Ampule: 2ml	7/7/95
Radian Corporation	6beta-Hydroxymethandienone, 100µg/ml, 1mg/ml	Ampule: 2ml	7/7/95
Radian Corporation	9-Carboxy-11-nor-Delta-9-Tetrahydrocannabinol-D3	Ampule: 2 ml	12/4/87
Radian Corporation	9-Carboxy-11-nor-delta-9-THC 0.1, 1.0 mg/ml	Amber glass ampule: 2ml	1/12/89
Radian Corporation	Alpha-Hydroxyalprazolam 0.1 mg/ml, 1.0 mg/ml	Vial: 2ml	6/12/91
Radian Corporation	Alpha-Hydroxyalprazolam-D5 0.1 mg/ml, 1.0 mg/ml	Vial: 2ml	6/12/91
Radian Corporation	Alpha-Hydroxytriazolam 0.1mg/ml, 1.0mg/ml	Ampule: 2ml	4/27/92
Radian Corporation	Alpha-Hydroxytriazolam-D4, 0.1mg/ml, 1.0mg/ml	Ampule: 2ml	4/27/92
Radian Corporation	Alprazolam 0.1mg/ml, 1.0mg/ml	Ampule: 2ml	11/5/90
Radian Corporation	Alprazolam-D5 0.1mg/ml, 1.0mg/ml	Ampule: 2ml	11/5/90
Radian Corporation	Amobarbital 0.1mg/ml, 1.0mg/ml	Ampule: 2ml	4/27/92
Radian Corporation	Amphetamine-D3 0.1 mg/ml	Ampule: 2 ml	12/4/87
Radian Corporation	Anhydroecgonine 100µg/ml, 1.0mg/ml	Ampule: 2ml	1/29/93
Radian Corporation	Anhydroecgonine HCL, 100µg/ml, 1mg/ml	Ampule: 2ml	7/7/95
Radian Corporation	Anhydroecgonine methyl ester, 100µg/ml, 1mg/ml	Ampule: 2ml	7/7/95
Radian Corporation	Anhydroecgonine-D3 100µg/ml, 1.0mg/ml	Ampule: 2ml	1/29/93
Radian Corporation	Benzoylecgonine	Ampule: 2ml	12/4/87
Radian Corporation	Benzoylecgonine isopropyl ester, 100µg/ml, 1mg/ml	Ampule: 2ml	7/7/95
Radian Corporation	Benzoylecgonine-D3	Ampule: 2ml	12/4/87
Radian Corporation	Bromazepam; 1.0mg/ml, 100µg/ml	Vial: 2ml	1/25/95
Radian Corporation	Buprenorphine 0.1	Ampule: 2ml	2/1/91
Radian Corporation	Buprenorphine-D4 0.1 mg/ml	Ampule: 2ml	2/1/91
Radian Corporation	Chlordiazepoxide 100µg/ml, 1.0mg/ml	Ampule: 2ml	12/22/93
Radian Corporation	Clobazam, 100µg/ml, 1mg/ml	Ampule: 2ml	7/7/95
Radian Corporation	Clonazepam-D4; 1.0mg/ml, 100µg/ml	Vial: 2ml	1/25/95
Radian Corporation	Cocaethylene 0.1mg/ml, 1.0mg/ml	Ampule: 2ml	12/13/90
Radian Corporation	Cocaethylene-D3	Ampule: 2ml	12/13/90
Radian Corporation	Cocaethylene-D8 100µg/ml, 1.0mg/ml	Ampule: 2ml	12/22/93
Radian Corporation	Cocaine 0.1, 1.0 mg/ml	Amber glass ampule: 2ml	1/12/89
Radian Corporation	Cocaine-D3	Ampule: 2 ml	12/4/87
Radian Corporation	Codeine	Ampule: 2 ml	3/9/88
Radian Corporation	Codeine-D3	Ampule: 2 ml	12/4/87

EXEMPT CHEMICAL PREPARATIONS—Continued

Supplier	Product name	Form	Date
Radian Corporation	D-Amphetamine 0.1, 1.0 mg/ml	Amber glass ampule: 2ml	1/12/89
Radian Corporation	D-Methamphetamine 0.1 mg/ml, 1.0 mg/ml	Vial: 2ml	6/12/91
Radian Corporation	D-Propoxyphene 0.1, 1.0 mg/ml	Amber glass ampule: 2ml	4/27/92
Radian Corporation	D-Propoxyphene 0.1mg/ml, 1.0mg/ml	Ampule: 2ml	4/27/92
Radian Corporation	DL-3, 4-MDEA 100µg/ml, 1.0mg/ml	Ampule: 2ml	12/22/93
Radian Corporation	DL-3, 4-MDEA-D5 100µg/ml, 1.0mg/ml	Ampule: 2ml	12/22/93
Radian Corporation	DL-Amphetamine 0.1, 1.0 mg/ml	Ampule: 2ml	12/4/87
Radian Corporation	DL-Amphetamine-D11, 0.1mg/ml, 1.0mg/ml	Ampule: 2ml	4/27/92
Radian Corporation	DL-Amphetamine-D3 0.1, 1.0 mg/ml	Ampule: 2ml	12/4/87
Radian Corporation	DL-Amphetamine-D5 (SC) 0.1, 1.0 mg/ml	Ampule: 2ml	12/4/87
Radian Corporation	DL-Amphetamine-D5 0.1, 1.0 mg/ml	Ampule: 2 ml	12/4/87
Radian Corporation	DL-Amphetamine-D5 0.1, 1.0 mg/ml	Ampule: 2ml	12/4/87
Radian Corporation	DL-Amphetamine-D8, 0.1mg/ml, 1.0mg/ml	Ampule: 2ml	4/27/92
Radian Corporation	DL-MDEA-D6; 1.0mg/ml, 100µg/ml	Vial: 2ml	1/25/95
Radian Corporation	DL-Methamphetamine 0.1, 1.0 mg/ml	Amber glass ampule: 2ml	1/12/89
Radian Corporation	DL-Methamphetamine-D11 0.1mg/ml, 1.0mg/ml	Ampule: 2ml	6/16/93
Radian Corporation	DL-Methamphetamine-D5 0.1, 1.0 mg/ml	Ampule: 2 ml	12/4/87
Radian Corporation	DL-Methamphetamine-D8 (Phenyl-D5 & N-Methyl-D3) 100µg/ml, 1.0mg/ml.	Ampule: 2ml	4/6/93
Radian Corporation	DL-Methamphetamine-D8 0.1 mg/ml	Ampule: 2ml	12/4/87
Radian Corporation	DL-Methamphetamine-D8, 0.1mg/ml, 1.0mg/ml	Ampule: 2ml	4/27/92
Radian Corporation	DL-Propoxyphene-D5 0.1, 1.0 mg/ml	2 ml amber ampule	10/19/88
Radian Corporation	Delta-9-Tetrahydrocannabinol 0.1, 1.0 mg/ml	Amber glass ampule: 2ml	1/12/89
Radian Corporation	Delta-9-Tetrahydrocannabinol-D3	Ampule: 2 ml	12/4/87
Radian Corporation	Diazepam 0.1, 1.0 mg/ml	Amber glass ampule: 2ml	1/12/89
Radian Corporation	Diazepam-D5 0.1 mg/ml	2 ml amber ampule	10/19/88
Radian Corporation	Diazepam-D5 1.0 mg/ml	2 ml amber ampule	10/19/88
Radian Corporation	Ecgonine 0.1 mg/ml, 1.0 mg/ml	Vial: 2ml	6/12/91
Radian Corporation	Ecgonine Methyl Ester 0.1, 1.0 mg/ml	Amber glass ampule: 2ml	1/12/89
Radian Corporation	Ecgonine Methyl Ester-D3 0.1 mg/ml	2 ml amber ampule	10/19/88
Radian Corporation	Ecgonine Methyl Ester-D3 1.0 mg/ml	2 ml amber ampule	10/19/88
Radian Corporation	Ecgonine ethyl ester, 100ug/ml, 1mg/ml	Ampule: 2ml	7/7/95
Radian Corporation	Ecgonine-D3 0.1 mg/ml, 1.0 mg/ml	Vial: 2ml	6/12/91
Radian Corporation	Estazolam; 1.0mg/ml, 100ug/ml	Vial: 2ml	1/25/95
Radian Corporation	Fentanyl	Ampule: 2ml	1/2/91
Radian Corporation	Fentanyl-D5	Ampule: 2ml	1/2/91
Radian Corporation	Flunitrazepam; 1.0mg/ml, 100ug/ml	Vial: 2ml	1/25/95
Radian Corporation	Fluoxymesterone, 100ug/ml, 1mg/ml	Ampule: 2ml	7/7/95
Radian Corporation	Flurazepam 0.1mg/ml, 1.0mg/ml	Ampule: 2ml	4/27/92
Radian Corporation	Heroin-D3; 1.0mg/ml, 100ug/ml	Vial: 2ml	1/25/95
Radian Corporation	Heroin-D6; 1.0mg/ml, 100ug/ml	Vial: 2ml	1/25/95
Radian Corporation	Heroin-D9; 1.0mg/ml, 100ug/ml	Vial: 2ml	1/25/95
Radian Corporation	Heroin; 1.0mg/ml, 100ug/ml	Ampule: 2ml	8/23/94
Radian Corporation	Hexobarbital; 1.0mg/ml, 100ug/ml	Ampule: 2ml	8/23/94
Radian Corporation	Hydrocodone-D3 0.1 mg/ml	2 ml amber ampule	10/19/88
Radian Corporation	Hydrocodone-D3 1.0 mg/ml	2 ml amber ampule	10/19/88
Radian Corporation	Hydrocodone 0.1, 1.0 mg/ml	Amber glass ampule: 2ml	1/12/89
Radian Corporation	Hydromorphone-D3 0.1 mg/ml	2 ml amber ampule	10/19/88
Radian Corporation	Hydromorphone-D3 1.0 mg/ml	2 ml amber ampule	10/19/88
Radian Corporation	Hydromorphone 0.1, 1.0 mg/ml	Amber glass ampule: 2ml	1/12/89
Radian Corporation	Ibogaine 100ug/ml, 1.0mg/ml	Ampule: 2ml	12/22/93
Radian Corporation	Ibogaine-D3 100ug/ml, 1.0mg/ml	Ampule: 2ml	12/22/93
Radian Corporation	Lorazepam 0.1mg/ml, 1.0mg/ml	Ampule: 2ml	4/27/92
Radian Corporation	Lorazepam glucuronide, 50ug/ml, 100ug/ml, 1mg/ml	Ampule: 2ml	7/7/95
Radian Corporation	Lorazepam-D4, 0.1mg/ml, 1.0mg/ml	Ampule: 2ml	4/27/92
Radian Corporation	Lormetazepam, 100ug/ml, 1mg/ml	Ampule: 2ml	7/7/95
Radian Corporation	Meperidine 0.1mg/ml, 1.0mg/ml	Ampule: 2ml	4/27/92
Radian Corporation	Meperidine 0.1mg/ml, 1.0mg/ml	Ampule: 2ml	4/27/92
Radian Corporation	Meprobamate 0.1mg/ml, 1.0mg/ml	Ampule: 2ml	4/27/92
Radian Corporation	Mescaline 100ug/ml, 1.0mg/ml	Ampule: 2ml	1/29/93
Radian Corporation	Mescaline-D9 100ug/ml, 1.0mg/ml	Ampule: 2ml	1/29/93
Radian Corporation	Methadone-D5 0.1 mg/ml	2 ml amber ampule	10/19/88
Radian Corporation	Methadone-D5 1.0 mg/ml	2 ml amber ampule	10/19/88
Radian Corporation	Methadone 0.1, 1.0 mg/ml	Amber glass ampule: 2ml	1/12/89
Radian Corporation	Methandienone, 100ug/ml, 1mg/ml	Ampule: 2ml	7/7/95
Radian Corporation	Methaqualone-D4 0.1 mg/ml	2 ml amber ampule	10/19/88
Radian Corporation	Methaqualone-D4 1.0 mg/ml	2 ml amber ampule	10/19/88
Radian Corporation	Methaqualone 0.1, 1.0 mg/ml	Amber glass ampule: 2ml	1/12/89
Radian Corporation	Methcathinone 100ug/ml, 1.0mg/ml	Ampule: 2ml	1/29/93
Radian Corporation	Methcathinone-D5 100ug/ml, 1.0mg/ml	Ampule: 2ml	1/29/93
Radian Corporation	Methenolone, 100ug/ml, 1mg/ml	Ampule: 2ml	7/7/95
Radian Corporation	Method 8270 Supplemental Stock Standard—2000ug/ml	Vial: 2ml	1/25/95

EXEMPT CHEMICAL PREPARATIONS—Continued

Supplier	Product name	Form	Date
Radian Corporation	Methohexital 0.1mg/ml, 1.0mg/ml	Ampule: 2ml	4/27/92
Radian Corporation	Methohexital-D5; 1.0mg/ml, 100ug/ml	Ampule: 2ml	8/23/94
Radian Corporation	Methylphenidate 0.1mg/ml, 1.0mg/ml	Ampule: 2ml	4/27/92
Radian Corporation	Methylphenidate HCL, 100ug/ml, 1mg/ml	Ampule: 2ml	7/7/95
Radian Corporation	Methyltestosterone; 1.0mg/ml, 100ug/ml	Vial: 2ml	1/25/95
Radian Corporation	Midazolam; 1.0mg/ml, 100ug/ml	Vial: 2ml	1/25/95
Radian Corporation	Morphine	Ampule: 2 ml	3/9/88
Radian Corporation	Morphine-3-Beta-D-glucuronide 0.1, 1.0mg/ml	Ampule: 2ml	2/1/91
Radian Corporation	Morphine-3-Beta-D-glucuronide-D3 0.1, 1.0mg/ml	Ampule: 2ml	2/1/91
Radian Corporation	Morphine-D3	Ampule: 2 ml	12/4/87
Radian Corporation	N-Ethylamphetamine; 1.0mg/ml, 100ug/ml	Vial: 2ml	1/25/95
Radian Corporation	Nitrazepam 0.1 mg/ml, 1.0 mg/ml	Ampule: 2ml	9/17/90
Radian Corporation	Nitrazepam-D5 0.1 mg/ml, 1.0 mg/ml	Ampule: 2ml	9/17/90
Radian Corporation	Norbenzoylecgonine, 100ug/ml, 1mg/ml	Ampule: 2ml	7/7/95
Radian Corporation	Norcocaethylene, 100ug/ml, 1mg/ml	Ampule: 2ml	7/7/95
Radian Corporation	Norcocaine 0.1 mg/ml, 1.0 mg/ml	Vial: 2ml	6/12/91
Radian Corporation	Norcocaine-D8 100ug/ml, 1.0mg/ml	Ampule: 2ml	12/22/93
Radian Corporation	Nordiazepam-D5 0.1 mg/ml	2 ml amber ampule	10/19/88
Radian Corporation	Nordiazepam-D5 1.0 mg/ml	2 ml amber ampule	10/19/88
Radian Corporation	Nordiazepam 0.1, 1.0 mg/ml	Amber glass ampule: 2ml	1/12/89
Radian Corporation	Norethandrolone, 100ug/ml, 1mg/ml	Ampule: 2ml	7/7/95
Radian Corporation	Noroxycodone 0.1mg/ml, 1.0mg/ml	Ampule: 2ml	6/16/93
Radian Corporation	Noroxymorphone 100ug/ml, 1.0mg/ml	Ampule: 2ml	6/16/93
Radian Corporation	Oxazepam-D5 0.1 mg/ml	2 ml amber ampule	10/19/88
Radian Corporation	Oxazepam-D5 1.0 mg/ml	2 ml amber ampule	10/19/88
Radian Corporation	Oxazepam-3-Beta-D-Glucuronide-D5; 100ug/ml, 1.0mg/ml	Ampule: 2ml	4/25/94
Radian Corporation	Oxazepam 0.1, 1.0 mg/ml	Amber glass ampule: 2ml	1/12/89
Radian Corporation	Oxazepam-3-Beta-D-Glucuronide; 100ug/ml, 1.0mg/ml	Ampule: 2ml	4/25/94
Radian Corporation	Oxycodone-D6 0.1mg/ml, 1.0mg/ml	Ampule: 2ml	6/16/93
Radian Corporation	Pentobarbital 0.1 mg/ml, 1.0 mg/ml	Ampule: 2ml	9/24/90
Radian Corporation	Pentobarbital-D5 0.1 mg/ml, 1.0 mg/ml	Ampule: 2ml	9/24/90
Radian Corporation	Phencyclidine 0.1 mg/ml, 1.0 mg/ml	Amber glass ampule: 2ml	1/12/89
Radian Corporation	Phencyclidine-D5	Ampule: 2 ml	12/4/87
Radian Corporation	Phenobarbital 0.1 mg/ml, 1.0 mg/ml	Amber glass ampule: 2ml	1/12/89
Radian Corporation	Phenobarbital-D5 0.1 mg/ml, 1.0 mg/ml	Ampule: 2 ml	12/4/87
Radian Corporation	Phentermine-D3; 1.0mg/ml, 100ug/ml	Vial: 2ml	1/25/95
Radian Corporation	Phentermine; 1.0mg/ml, 100ug/ml	Vial: 2ml	1/25/95
Radian Corporation	Prazepam 100ug/ml, 1.0mg/ml	Ampule: 2ml	1/29/93
Radian Corporation	Prazepam-D5 100ug/ml, 1.0mg/ml	Ampule: 2ml	1/29/93
Radian Corporation	Quazepam; 1.0mg/ml, 100ug/ml	Vial: 2ml	1/25/95
Radian Corporation	Stanozolol-D3; 100ug/ml, 1.omg/ml	Ampule: 2ml	6/6/94
Radian Corporation	Stanozolol; 100ug/ml, 1.omg/ml	Ampule: 2ml	6/6/94
Radian Corporation	Temazepam 0.1 mg/ml, 1.0 mg/ml	Ampule: 2ml	9/17/90
Radian Corporation	Temazepam-D5 0.1 mg/ml, 1.0 mg/ml	Ampule: 2ml	9/17/90
Radian Corporation	Triazolam 0.1mg/ml, 1.0mg/ml	Ampule: 2ml	4/27/92
Radian Corporation	Triazolam-D4 0.1mg/ml, 1.0mg/ml	Ampule: 2ml	4/27/92
Radian Corporation	alpha-Hydroxyalprazolam glucuronide, 50ug/ml, 100ug/ml, 1mg/ml.	Ampule: 2ml	7/7/95
Radian Corporation	alpha-Hydroxymidazolam, 100ug/ml, 1mg/ml	Ampule: 2ml	7/7/95
Radian Corporation	alpha-Hydroxytriazolam glucuronide, 50ug/ml, 100ug/ml, 1mg/ml.	Ampule: 2ml	7/7/95
Radian Corporation	m-Hydroxybenzoylecgonine; 1.0mg/ml, 100ug/ml	Vial: 2ml	1/25/95
Research Diagnostics	3H Alfentanil	Vial: 0.5ml	6/15/89
Research Diagnostics	3H Fentanyl	Vial: 0.5ml	6/15/89
Research Diagnostics	3H Sufentanil	Vial: 0.5ml	6/15/89
Research Diagnostics	Alfentanil Radioimmunoassay	Kit: 200 tests	6/15/89
Research Diagnostics	Alfentanil Radioimmunoassay	Kit: 200 tests	6/15/89
Research Diagnostics	Fentanyl Analogs Reference Standards for Drug Analysis	Amber Ampule: 1 ml, Plastic Shell: 5 ampules, Kit: 2 shells (10 ampules).	10/17/89
Research Diagnostics	Fentanyl Radioimmunoassay	Kit: 200 tests	6/15/89
Research Diagnostics	Sufentanil Radioimmunoassay	Kit: 200 tests	6/15/89
Research Triangle Institute	11-Nor-9-carboxy-delta-9 THC Blood Standards Kit	Kit Containing: 18-21ml Ampuls; 1-5ml Ampul.	10/26/81
Research Triangle Institute	11-Nor-9-carboxy-delta-9 THC Plasma Standards Kit	Kit Containing: 18-21ml Ampuls; 1-5ml Ampul.	10/26/81
Research Triangle Institute	Delta-9 THC Blood Standards Kit	Kit Containing: 16-2ml Ampuls; 1-5ml Ampul.	10/26/81
Research Triangle Institute	Delta-9 THC Plasma Standards Kit	Kit Containing: 16-2ml Ampuls; 1-5ml Ampul.	11/2/81

EXEMPT CHEMICAL PREPARATIONS—Continued

Supplier	Product name	Form	Date
Research Triangle Institute	Iodine Kit for Radioimmunoassay of 11-Nor-9-carboxy-delta-9 THC in Blood.	Kit Containing: 26-1ml Ampuls; 2-20ml Vials; 2-250ml Bottles.	10/26/81
Research Triangle Institute	Iodine Kit for Radioimmunoassay of 11-Nor-9-carboxy-delta-9 THC in Plasma.	Kit Containing: 24-1ml Ampuls; 2-20ml Vials; 2-250ml Bottles.	10/26/81
Research Triangle Institute	Iodine Kit for Radioimmunoassay of Delta-9 THC	Kit Containing: 20-1ml Ampules; 2-20ml Vials; 2-250ml Bottles.	10/20/80
Research Triangle Institute	Iodine Kit for Radioimmunoassay of Delta-9 THC in Blood	Kit Containing: 22-1ml Ampules; 2-20ml Vials; 2-250ml Bottles.	7/10/81
Research Triangle Institute	Tritium Kit for Radioimmunoassay of Delta-9 THC	Kit Containing: 20-1ml Ampules; 2- 20ml Vials; 2-250ml Bottles.	6/27/80
Restek Corp	Alprazolam	Ampule: 2ml	1/8/93
Restek Corp	Amobarbital	Ampule: 2ml	1/8/93
Restek Corp	Amphetamine	Ampule: 2ml	1/8/93
Restek Corp	Aprobarbital	Ampule: 2ml	1/8/93
Restek Corp	Barbital	Ampule: 2ml	1/8/93
Restek Corp	Benzoylecgonine	Ampule: 2ml	1/8/93
Restek Corp	Benzphetamine	Ampule: 2ml	1/8/93
Restek Corp	Bromazepam	Ampule: 2ml	1/8/93
Restek Corp	Butabarbital	Ampule: 2ml	1/8/93
Restek Corp	Butalbital	Ampule: 2ml	1/8/93
Restek Corp	Cannabidiol delta-8	Ampule: 2ml	1/8/93
Restek Corp	Cannabinol	Ampule: 2ml	1/8/93
Restek Corp	Chlordiazepoxide	Ampule: 2ml	1/8/93
Restek Corp	Clobazam	Ampule: 2ml	1/8/93
Restek Corp	Clonazepam	Ampule: 2ml	1/8/93
Restek Corp	Cocaethylene	Ampule: 2ml	1/8/93
Restek Corp	Cocaine	Ampule: 2ml	1/8/93
Restek Corp	Codeine	Ampule: 2ml	1/8/93
Restek Corp	Desmethyl Diazepam	Ampule: 2ml	1/8/93
Restek Corp	Diacetylmorphine	Ampule: 2ml	1/8/93
Restek Corp	Diazepam	Ampule: 2ml	1/8/93
Restek Corp	EPA Exempt Mix #1	Ampule: 1.25ml	3/18/94
Restek Corp	EPA Exempt Mix #2	Ampule: 1.25ml	3/18/94
Restek Corp	EPA Exempt Mix #3	Ampule: 1.25ml	3/18/94
Restek Corp	Ecgonine	Ampule: 2ml	1/8/93
Restek Corp	Ecgonine methyl ester	Ampule: 2ml	1/8/93
Restek Corp	Fenfluramine	Ampule: 2ml	1/8/93
Restek Corp	Fentanyl	Ampule: 2ml	1/8/93
Restek Corp	Flunitrazepam	Ampule: 2ml	1/8/93
Restek Corp	Flurazepam	Ampule: 2ml	1/8/93
Restek Corp	Glutethimide	Ampule: 2ml	1/8/93
Restek Corp	Hexobarbital	Ampule: 2ml	1/8/93
Restek Corp	Hydrocodone	Ampule: 2ml	1/8/93
Restek Corp	Levorphanol	Ampule: 2ml	1/8/93
Restek Corp	Lorazepam	Ampule: 2ml	1/8/93
Restek Corp	Medazepam	Ampule: 2ml	1/8/93
Restek Corp	Meperidine	Ampule: 2ml	1/8/93
Restek Corp	Mephobarbital	Ampule: 2ml	1/8/93
Restek Corp	Meprobamate	Ampule: 2ml	1/8/93
Restek Corp	Methadone	Ampule: 2ml	1/8/93
Restek Corp	Methamphetamine	Ampule: 2ml	1/8/93
Restek Corp	Methohexital	Ampule: 2ml	1/8/93
Restek Corp	Methyprylon	Ampule: 2ml	1/8/93
Restek Corp	Morphine	Ampule: 2ml	1/8/93
Restek Corp	Nitrazepam	Ampule: 2ml	1/8/93
Restek Corp	Oxazepam	Ampule: 2ml	1/8/93
Restek Corp	Oxycodone	Ampule: 2ml	1/8/93
Restek Corp	Pentazocine	Ampule: 2ml	1/8/93
Restek Corp	Pentobarbital	Ampule: 2ml	1/8/93
Restek Corp	Phencyclidine	Ampule: 2ml	1/8/93
Restek Corp	Phendimetrazine	Ampule: 2ml	1/8/93
Restek Corp	Phenmetrazine	Ampule: 2ml	1/8/93
Restek Corp	Phenobarbital	Ampule: 2ml	1/8/93
Restek Corp	Phentermine	Ampule: 2ml	1/8/93
Restek Corp	Prazepam	Ampule: 2ml	1/8/93
Restek Corp	Propoxyphene	Ampule: 2ml	1/8/93
Restek Corp	Secobarbital	Ampule: 2ml	1/8/93

EXEMPT CHEMICAL PREPARATIONS—Continued

Supplier	Product name	Form	Date
Restek Corp	Talbutal	Ampule: 2ml	1/8/93
Restek Corp	Temazepam	Ampule: 2ml	1/8/93
Restek Corp	Tetrahydrocannabinol 11-nor delta-9-THC-carboxylic acid	Ampule: 2ml	1/8/93
Restek Corp	Tetrahydrocannabinol delta-9	Ampule: 2ml	1/8/93
Restek Corp	Thebaine	Ampule: 2ml	1/8/93
Restek Corp	Thiamylal	Ampule: 2ml	1/8/93
Restek Corp	Thiopental	Ampule: 2ml	1/8/93
Restek Corp	Triazolam	Ampule: 2ml	1/8/93
Roche Diagnostic Systems, Inc	Abuscreen Calibration Standard for Amphetamine	Kit: 2 Vials	10/12/87
Roche Diagnostic Systems, Inc	Abuscreen Calibration Standard for Barbiturate	Kit: 2 Vials	10/12/87
Roche Diagnostic Systems, Inc	Abuscreen Calibration Standard for Cannabinoids	Kit: 2 Vials	10/12/87
Roche Diagnostic Systems, Inc	Abuscreen Calibration Standard for Cocaine Metabolite	Kit: 2 Vials	10/12/87
Roche Diagnostic Systems, Inc	Abuscreen Calibration Standard for LSD (Lysergic Acid Diethylamide).	Kit: 2 Vials	10/12/87
Roche Diagnostic Systems, Inc	Abuscreen Calibration Standard for Methamphetamine (High Specificity).	Kit: 2 vials	5/27/92
Roche Diagnostic Systems, Inc	Abuscreen Calibration Standard for Morphine	Kit: 2 Vials	10/12/87
Roche Diagnostic Systems, Inc	Abuscreen Calibration Standard for Phencyclidine (PCP)	Kit: 2 Vials	10/12/87
Roche Diagnostic Systems, Inc	Abuscreen ONLINE Benzoylecgonine Microparticle Reagent	Bottle: 4.5L	3/31/94
Roche Diagnostic Systems, Inc	Abuscreen ONLINE Calibration Pack	Kit: 8 vials	5/18/92
Roche Diagnostic Systems, Inc	Abuscreen ONLINE Calibrator Level 3	Pack: 6 vials	5/18/92
Roche Diagnostic Systems, Inc	Abuscreen ONLINE Cannabinoids Microparticle Reagent	Bottle: 4.5L	3/31/94
Roche Diagnostic Systems, Inc	Abuscreen ONLINE Opiates Microparticle Reagent	Bottle: 4.5L	3/31/94
Roche Diagnostic Systems, Inc	Abuscreen ONLINE Positive Control	Pack: 6 vials	5/18/92
Roche Diagnostic Systems, Inc	Abuscreen ONLINE THC Positive Control	Kit: 6 vials; 4ml/vial	3/22/93
Roche Diagnostic Systems, Inc	Abuscreen ONLINE for Cocaine Metabolite	Kit: 100, 1000, 8000 Tests	3/19/91
Roche Diagnostic Systems, Inc	Abuscreen ONLINE for Opiates	Kit: 100, 1000, 8000 Tests	3/19/91
Roche Diagnostic Systems, Inc	Abuscreen ONLINE for THC	Vial: 100, 1000, 8000 Tests	3/19/91
Roche Diagnostic Systems, Inc	Abuscreen ONTRAK Amphetamine	Kit: 50 tests, 100 tests	3/14/88
Roche Diagnostic Systems, Inc	Abuscreen ONTRAK Amphetamine Positive Control	Vial: 4 ml	3/14/88
Roche Diagnostic Systems, Inc	Abuscreen ONTRAK Barbiturate	Kit: 50 tests, 100 tests	3/14/88
Roche Diagnostic Systems, Inc	Abuscreen ONTRAK Barbiturates Positive Control	Vial: 4 ml	3/14/88
Roche Diagnostic Systems, Inc	Abuscreen ONTRAK Benzodiazepines	Kit: 50 Tests, 100 Tests	5/3/91
Roche Diagnostic Systems, Inc	Abuscreen ONTRAK Cocaine Metabolite	Kit: 50 tests, 100 tests	3/14/88
Roche Diagnostic Systems, Inc	Abuscreen ONTRAK Cocaine Metabolite Positive Control	Vial: 4 ml	3/14/88
Roche Diagnostic Systems, Inc	Abuscreen ONTRAK Methadone	Kits: 50, 100 Tests	9/8/93
Roche Diagnostic Systems, Inc	Abuscreen ONTRAK Morphine	Kits: 50 tests, 100 tests	3/14/88
Roche Diagnostic Systems, Inc	Abuscreen ONTRAK Morphine Positive Control	Vial: 4 ml	3/14/88
Roche Diagnostic Systems, Inc	Abuscreen ONTRAK Multianalyte Positive Control	Kit: 1 Vial, 8ml	9/18/95
Roche Diagnostic Systems, Inc	Abuscreen ONTRAK Phencyclidine (PCP)	Kit: 50 tests, 100 tests	11/22/89
Roche Diagnostic Systems, Inc	Abuscreen ONTRAK Phencyclidine (PCP) Positive Control	Vial: 4 ml	11/22/89
Roche Diagnostic Systems, Inc	Abuscreen ONTRAK THC (100ng/ml)	Kit: 50 tests, 100 tests	3/14/88
Roche Diagnostic Systems, Inc	Abuscreen ONTRAK THC (50ng/ml)	Kit: 50 Tests, 100 Tests	5/3/91
Roche Diagnostic Systems, Inc	Abuscreen ONTRAK THC Positive Control	Vial: 4 ML	3/14/88
Roche Diagnostic Systems, Inc	Abuscreen ONTRAK for Benzodiazepines Positive Control	Vial: 4ml	3/22/93
Roche Diagnostic Systems, Inc	Abuscreen Radioimmunoassay for Amphetamine High Specificity.	Kit: 100 tests, 2500 tests	9/13/85
Roche Diagnostic Systems, Inc	Abuscreen Radioimmunoassay for Barbiturates	Kit: 100 tests, 2500 tests	2/15/83
Roche Diagnostic Systems, Inc	Abuscreen Radioimmunoassay for Benzodiazepines	Kit: 100 tests, 2500 tests	3/6/87
Roche Diagnostic Systems, Inc	Abuscreen Radioimmunoassay for Cannabinoids	Kit: 100 Tests 2, 500 Tests	8/14/81
Roche Diagnostic Systems, Inc	Abuscreen Radioimmunoassay for Cocaine Metabolite	Kit: 100 Tests, 2500 Tests	2/15/83
Roche Diagnostic Systems, Inc	Abuscreen Radioimmunoassay for LSD (Lysergic Acid Diethylamide).	Kit: 100 tests, 2500 tests	1/28/86
Roche Diagnostic Systems, Inc	Abuscreen Radioimmunoassay for Methamphetamine High Specificity.	Kit: 100 tests, 2500 tests	3/1/89
Roche Diagnostic Systems, Inc	Abuscreen Radioimmunoassay for Methaqualone	Kit: 100 tests, 2500 tests	2/15/83
Roche Diagnostic Systems, Inc	Abuscreen Radioimmunoassay for Morphine	Kit: 100 tests, 2500 tests	2/15/83
Roche Diagnostic Systems, Inc	Abuscreen Radioimmunoassay for Phencyclidine (PCP)	Kit: 100 tests, 2500 tests	2/15/83
Roche Diagnostic Systems, Inc	Abuscreen Reference Controls and Calibrator for Amphetamine.	Kit: 3 Vials, 100ml each	10/12/87
Roche Diagnostic Systems, Inc	Abuscreen Reference Controls and Calibrator for Barbiturate	Kit: 3 Vials, 100ml each	10/12/87
Roche Diagnostic Systems, Inc	Abuscreen Reference Controls and Calibrator for Cannabinoids.	Kit: 3 Vials, 100ml each	10/12/87
Roche Diagnostic Systems, Inc	Abuscreen Reference Controls and Calibrator for Cocaine Metabolite.	Kit: 3 Vials, 100ml each	10/12/87
Roche Diagnostic Systems, Inc	Abuscreen Reference Controls and Calibrator for LSD (Lysergic Acid Diethylamide).	Kit: 3 Vials, 100ml each	10/12/87
Roche Diagnostic Systems, Inc	Abuscreen Reference Controls and Calibrator for Methamphetamine (High Specificity).	Kit: 3 vials, 100ml each	5/27/92
Roche Diagnostic Systems, Inc	Abuscreen Reference Controls and Calibrator for Morphine	Kit: 3 Vials, 100ml each	10/12/87
Roche Diagnostic Systems, Inc	Abuscreen Reference Controls and Calibrator for Phencyclidine (PCP).	Kit: 3 Vials, 100ml each	10/12/87

EXEMPT CHEMICAL PREPARATIONS—Continued

Supplier	Product name	Form	Date
Roche Diagnostic Systems, Inc	Abuscreenm ONTRAK Methadone Positive Reference Control	Vial: 4ml	9/08/93
Roche Diagnostic Systems, Inc	CAL PACK Abuscreen ONLINE THC Calibration Pack	Kit: 4 vials	9/11/91
Roche Diagnostic Systems, Inc	COBAS FP Phenobarbital Calibrators	Kit: 6 Vials	11/13/84
Roche Diagnostic Systems, Inc	COBAS FP Reagents for Phenobarbital	Kit: 100 tests	11/13/84
Roche Diagnostic Systems, Inc	COBAS FP TDM Controls	Kit: 6 Vials	11/13/84
Roche Diagnostic Systems, Inc	COBAS INTEGRA Cassette for Cannabinoids	Kit: 3 Vials	9/27/95
Roche Diagnostic Systems, Inc	COBAS INTEGRA Cassette for Cocaine Metabolite	Kit: 3 Vials	9/27/95
Roche Diagnostic Systems, Inc	COBAS INTEGRA Cassette for Opiates	Kit: 3 Vials	9/27/95
Roche Diagnostic Systems, Inc	Immunizing Preparation No. 1, 2, 3, 4, 5, 6, 7, or 8	Vial: 10, 20, 50, or 100ml	1/25/83
Roche Diagnostic Systems, Inc	Immunizing Preparation No. 9	Vial: 10ml, 20ml, 50ml, or 100ml.	7/24/84
Roche Diagnostic Systems, Inc	Immunizing Preparation No. 9A	Vial: 10ml, 20ml, 50ml, or 100ml.	7/24/84
Roche Diagnostic Systems, Inc	Immunizing Preparation No.10	Vial: 10ml, 20ml, 50ml, or 100ml.	4/2/86
Roche Diagnostic Systems, Inc	Immunizing Preparation No.10A	Vial: 10ml, 20ml, 50ml, or 100ml.	4/2/86
Roche Diagnostic Systems, Inc	Immunizing Preparations No. 1A, 2A, 3A, 4A, 5A, 6A, 7A, or 8A.	Vial: 10ml, 20ml, 50ml, or 100ml.	7/12/83
Roche Diagnostic Systems, Inc	OnTrak TesTcup Positive Control	Box: 6 Vials	9/25/95
Rowley Biochemical Institute, Inc.	Aldehyde Fuchsin Solution	Bottle: Pint, Quart, Gallon	2/2/84
Rowley Biochemical Institute, Inc.	Aldehyde Thionin Solution	Bottle: Pint, Quart, Gallon	2/2/84
Rowley Biochemical Institute, Inc.	Mayer's Hematoxylin Solution	Bottle: Pint, Quart, Gallon	2/2/84
Schering Corp	Hepaquik	Vial: 9 Dram and Plate	7/16/72
Serex Inc	Benzoylecgonine Positive Control	Bottle: 1 ml	12/16/89
Serex Inc	Benzoylecgonine Standards	Bottle: 1 ml	12/16/89
Serex Inc	CoMA EIA for Cocaine Metabolite	Kit: 96 tests, 2 Bottles: 5 ml ea., Assay Plate: 96 wells.	10/17/89
Serex Inc	Cocaine Metabolite Standards and Controls Kit	Kit: 3 bottles—100 Assays	12/16/89
Serex, Inc	Automates CoMA Cocaine Metabolite Assay	Kit: 3 Bottles; 50, 1000 Tests	7/22/92
Serex, Inc	Automates CoMA Cocaine Metabolite Assay Reagent B	Bottle: 12.5ml, 50ml	7/22/92
Serex, Inc	Automates CoMA High Calibrator	Vial: 5ml	7/22/92
Serex, Inc	Automates CoMA Plus Cocaine Metabolite Assay	Kit: 3 Bottles; 50, 1000 Tests	7/22/92
Serex. Inc	Automates CoMA Low Calibrator	Vial: 5ml	7/22/92
Serex. Inc	Automates CoMA Plus Cocaine Metabolite Assay Reagent B	Bottle: 12, 5ml, 50ml	7/22/92
Serono Diagnostics, Inc	rT3 Barbital Buffer	Glass Vial: 120ml	10/26/84
Serono Diagnostics, Inc	rT3-125I	Glass Vial: 13ml	10/26/84
Serono Diagnostics, Inc	rT3-Antiserum	Glass Vial: 13ml	10/26/84
Sherwood Medical Company	Lancer Fibrinogen Determination, Reagent Kit Catalog No. 8889-007608.	Kit	4/17/75
Sigma Chemical Co	(+)Deoxyephedrine-d5 HCl #D-5914	Ampule: 2ml	8/28/90
Sigma Chemical Co	(+/−)-(2 Methylamino)propiophenone Hydrochloride	Ampule: 1ml	7/30/92
Sigma Chemical Co	(+/−) 2, 5-Dimethoxy-4-bromo-amphetamine Hydrobromide, D-7633.	Ampule: 2ml	9/25/91
Sigma Chemical Co	(+/−) 2, 5-Dimethoxy-4-methyl-amphetamine HCl, D-7883	Ampule: 2ml	9/25/91
Sigma Chemical Co	(+/−) Deoxyephedrine HCl, D-7508	Ampule: 2ml	9/25/91
Sigma Chemical Co	(−) Deoxyephedrine, D-7258	Ampule: 2ml	9/25/91
Sigma Chemical Co	1-Dehydrotestosterone, Product #D5791	Ampule: 2ml	1/30/92
Sigma Chemical Co	1-Tetrahydrocannabinol, Product No. T4764	Vial: 1ml	5/11/81
Sigma Chemical Co	11-Hydroxy-delta 9 Tetrahydrocannabinol Cat. No. H3879	Ampule: 2ml	11/6/91
Sigma Chemical Co	11-nor-delta-9-Tetrahyrocannabinol, 9-carboxylic .05 mg/ml acid, No. N-5642.	Glass Ampule: 2 ml	6/29/89
Sigma Chemical Co	11-nor-delta-9THC-9-Carboxylic Acid #N-6893	Ampule: 2ml	8/28/90
Sigma Chemical Co	11Beta-Hydroxytestosterone, H-4646	Vial: 2ml	2/04/94
Sigma Chemical Co	17alpha-Methyltestosterone, Product #M8783	Ampule: 2ml	1/30/92
Sigma Chemical Co	19-Nortesterone 17-Phenylpropionate, N 2771	Ampule: 1ml	7/30/92
Sigma Chemical Co	19-Nortesterone 17-Propionate, N 2896	Ampule: 1ml	7/30/92
Sigma Chemical Co	19-Nortestosterone 17-Decanoate, N 3021	Ampule: 1ml	7/30/92
Sigma Chemical Co	19-Nortestosterone, Product #N1269	Ampule: 2ml	1/30/92
Sigma Chemical Co	3,4 Methylenedioxymethamphetamine 1 mg/ml, No. M-5029	Glass Ampule: 2 ml	6/29/89
Sigma Chemical Co	3,4-Methylenedioxyamphetamine, No. M–3272	Glass Ampule: 2ml	6/6/89
Sigma Chemical Co	3-Methylfentanyl HCl, M–6255	Ampule: 2ml	9/25/91
Sigma Chemical Co	5,5-Diallylbarbituric Acid, Product No. D–6013	Sealed Ampule: 1ml	6/30/77
Sigma Chemical Co	5-Alpha-Androstan-17beta-ol-3-one Benzoate, A 9768	Ampule: 1ml	7/30/92
Sigma Chemical Co	5-Androstene-3Beta, 17Beta-Diol, Product #A0684	Ampule: 2ml	1/30/92
Sigma Chemical Co	6-Tetrahydrocannabinol, Product No. T-4889	Vial: 1ml	5/11/81
Sigma Chemical Co	AST Reagent A, Stock No. 56–2	Vial: 10ml	6/27/79
Sigma Chemical Co	Acid Hematoxylin Solution, No. 285–2	Bulk: 1000L	5/04/93
Sigma Chemical Co	Acid Hematoxylin Solution, No.285–2	Bottle: 25ml, 100ml	8/6/73

EXEMPT CHEMICAL PREPARATIONS—Continued

Supplier	Product name	Form	Date
Sigma Chemical Co	Adenosine Phosphate Substrate, Product No. 675–1	Bottle: 4 ounce	7/25/83
Sigma Chemical Co	Allylcyclopentylbarbituric Acid (A–7787)	Sealed Ampule: 1ml	4/10/85
Sigma Chemical Co	Allylisobutylbarbituric Acid (A–1038)	Sealed Ampule: 1ml	4/10/85
Sigma Chemical Co	Alpha-Ethyltryptamine Acetate, Product #E1392	Vial: 2ml	2/4/94
Sigma Chemical Co	Alphaprodine Hydrochloride (A–1537)	Ampule: 1ml	8/27/84
Sigma Chemical Co	Alphenal (A–1163)	Ampule: 1ml	4/10/85
Sigma Chemical Co	Alprazolam .25 mg/ml, No. A–5052	Glass Ampule: 2 ml	6/29/89
Sigma Chemical Co	Alprazolam-d5 #A–7055	Ampule: 2ml	8/28/90
Sigma Chemical Co	Ammonia Reagent , Stock No. 170–10	Vial: 10ml	2/17/77
Sigma Chemical Co	Ammonia Reagent Kit: Stock No. 170–10	Kit: 10 Vials	2/17/77
Sigma Chemical Co	Ammonia Reagent Stock No. 170–10	Vial: 30ml	12/13/77
Sigma Chemical Co	Ammonia in Plasma Kit	Kit: 100 tests, 30 tests	12/13/77
Sigma Chemical Co	Amobarbital , Product No. A–5142	Sealed Ampule: 1ml	6/30/77
Sigma Chemical Co	Amobarbital Sodium Salt, Product No. A–7441	Ampule: 1ml	5/13/93
Sigma Chemical Co	Antibody Sensitized Sheep Erythrocytes (EA7S)	Vials: 2ml and 5X 2ml	4/2/86
Sigma Chemical Co	Aprobarbital, Product No. A–7023	Sealed Ampule: 1ml	6/30/77
Sigma Chemical Co	Barbital Buffer, Product No. B–6632	Polyethylene Vial: 30ml	5/11/77
Sigma Chemical Co	Barbital Buffer 5X Concentrate Electrophoresis Reagent Cat. No. B–3506.	Bottle: 200ml	11/14/91
Sigma Chemical Co	Barbital Buffer with Albumin Stock No. 880–3	Vial: 20ml	7/11/80
Sigma Chemical Co	Barbital, Product No. B–8632	Sealed Ampule: 1ml	6/30/77
Sigma Chemical Co	Benzoylecgonine 1 mg/ml, No. B–8900	Glass Ampule: 2 ml	6/29/89
Sigma Chemical Co	Benzoylecgonine-d3 #B–3277	Ampule: 2ml	8/28/90
Sigma Chemical Co	Benzphetamine Hydrochloride, Product No. B–8765	Sealed Ampule: 1ml	6/8/84
Sigma Chemical Co	Bolasterone, Product #B3404	Ampule: 1ml	1/30/92
Sigma Chemical Co	Bromazepam #B–5402	Ampule: 2ml	8/28/90
Sigma Chemical Co	Bufotenine Monooxalate, Product No. B–8757	Sealed Ampule: 1ml	6/30/77
Sigma Chemical Co	Buprenorphine Hydrochloride	Vial: 2ml	9/12/94
Sigma Chemical Co	Butabarbital , Product No. B–8882	Sealed Ampule: 1ml	6/30/77
Sigma Chemical Co	Butalbital, Product No. B–5514	Sealed Ampule: 1ml	9/19/83
Sigma Chemical Co	Butethal (B–7516)	Ampule: 1ml	9/5/85
Sigma Chemical Co	Cannabidiol, Product No. C–6395	Vial: 1ml	5/11/81
Sigma Chemical Co	Cannabinol, Product No. C–6520	Vial: 1ml	5/11/81
Sigma Chemical Co	Chloral Hydrate , Product No. C–6516	Sealed Ampule: 1ml	6/30/77
Sigma Chemical Co	Chloral Hydrate, Product #C9954	Ampule: 1ml	5/10/95
Sigma Chemical Co	Chlorazepam Dipotassium Salt, (C–9531)	Ampule: 1ml	5/24/85
Sigma Chemical Co	Chlordiazepoxide (C–4782)	Ampule: 1ml	9/5/85
Sigma Chemical Co	Chlordiazepoxide Hydrochloride Acetonitrile Drug Standard #C–9547.	Ampule: 2ml	6/26/90
Sigma Chemical Co	Chlordiazepoxide-d5 #C–5047	Ampule: 2ml	8/28/90
Sigma Chemical Co	Clobazam, No. C–6667	Glass Ampule: 2ml	6/6/89
Sigma Chemical Co	Clonazepam, Product No. C–4404	Sealed Ampule: 1ml	6/8/84
Sigma Chemical Co	Cocaethylene, #C–8205	Ampule: 1ml	10/9/95
Sigma Chemical Co	Cocaethylene, C–7313	Vial: 2ml	2/4/94
Sigma Chemical Co	Cocaethylene-D5, #C–7073	Ampule: 1ml	10/9/95
Sigma Chemical Co	Cocaine Hydrochloride Product No. C–1528	Sealed Ampule: 1ml	9/19/83
Sigma Chemical Co	Cocaine-d3 #C–3547	Ampule: 2ml	8/28/90
Sigma Chemical Co	Codeine-d3 HCl #C–3672	Ampule: 2ml	8/28/90
Sigma Chemical Co	Codeine, Product No. C–1653	Sealed Ampule: 1ml	9/19/83
Sigma Chemical Co	D-Amphetamine Sulfate, Product No. A–3278	Vial: 1ml	5/11/81
Sigma Chemical Co	D-Propoxyphene Hydrochloride, P–1550	Ampule: 1ml	9/27/84
Sigma Chemical Co	DL-Amphetamine HCL , Product No. A–5017	Sealed Ampule: 1ml	6/30/77
Sigma Chemical Co	Delorazepam #D–5789	Ampule: 2ml	8/28/90
Sigma Chemical Co	Desmethyldiazepam 1 mg/ml, No. D–3162	Glass Ampule: 2 ml	6/29/89
Sigma Chemical Co	Desmethyldiazepam-d5 #D–6039	Ampule: 2ml	8/28/90
Sigma Chemical Co	Diazepam, Product No. D–9900	Sealed Ampule: 1ml	6/8/84
Sigma Chemical Co	Diazepam-d5 #D–5664	Ampule: 2ml	8/28/90
Sigma Chemical Co	Diethylpropion Hydrochloride, Product No. D–7274	Sealed Ampule: 1ml	9/19/83
Sigma Chemical Co	Diphenoxylate HCL, Product #D0780	Ampule: 1ml	9/5/85
Sigma Chemical Co	Drug Standard Mix 1, D–3155	Ampule: 2ml	4/18/86
Sigma Chemical Co	Drug Standard Mix 2, D–3030	Ampule: 2ml	4/18/86
Sigma Chemical Co	Ecgonine Hydrochloride 1 mg/ml, No. E–9762	Glass Ampule: 2 ml	6/29/89
Sigma Chemical Co	Ecgonine-d3 HCl #E–2014	Ampule: 2ml	8/28/90
Sigma Chemical Co	Ecgonine-d3 Methyl Ester HCl #E–2139	Ampule: 2ml	8/28/90
Sigma Chemical Co	Estazolam #E–1139	Ampule: 2ml	8/28/90
Sigma Chemical Co	Ethinamate (E–8508)	Ampule: 1ml	4/10/85
Sigma Chemical Co	Ethylmorphine, E–3377	Ampule: 2ml	9/25/91
Sigma Chemical Co	Fencamfamine Hydrochloride	Vial: 2ml	9/12/94
Sigma Chemical Co	Fenfluramine Hydrochloride, Product No. F–1884	Sealed Ampule: 1ml	9/19/83
Sigma Chemical Co	Fenproporex Hydrochloride, No. F–7261	Glass Ampule: 2ml	6/6/89
Sigma Chemical Co	Fentanyl Citrate, No. F–5886	Glass Ampule: 2 ml	6/6/89
Sigma Chemical Co	Fentanyl-d5 Citrate #F–2520	Ampule: 2ml	8/28/90

EXEMPT CHEMICAL PREPARATIONS—Continued

Supplier	Product name	Form	Date
Sigma Chemical Co	Flunitrazepam No. F–8763	Vial: 1 ml	6/30/87
Sigma Chemical Co	Fluoxymesterone, Product #F6891	Ampule: 2ml	1/30/92
Sigma Chemical Co	Flurazepam Dihydrochloride Product #F9134	Vial: 1 ml	10/20/89
Sigma Chemical Co	Gelatin Veronal Buffer (GVB2+) No. G–6514	Vial: 50 ml, 250ml	9/15/86
Sigma Chemical Co	Glutethimide, Product No. G–3134	Sealed Ampule: 1 ml	6/30/77
Sigma Chemical Co	Glycerophosphate Substrate, Product No. 675–2	Bottle: 4 ounce	7/25/83
Sigma Chemical Co	Heroin Hydrochloride .1 mg/ml, No. H–5144	Glass Ampule: 2 ml	6/29/89
Sigma Chemical Co	Hexobarbital, Product No. H–2007	Sealed Ampule: 1 ml	6/30/77
Sigma Chemical Co	Hydrocodone Bitartrate, No. H–2269	Glass Ampule: 2 ml	6/6/89
Sigma Chemical Co	Hydromorphone Hydrochloride No. H–7141	Vial: 1 ml	6/30/87
Sigma Chemical Co	Hydroxytestosterone, Product #H9901	Vial: 0.5 ml	5/10/95
Sigma Chemical Co	Ibogaine HCL, Product No. I–4630	Sealed Ampule: 1 ml	6/30/77
Sigma Chemical Co	LDH Electrophoresis Buffer, Stock No. 705–1	Bottle: 30 ml	1/4/77
Sigma Chemical Co	LDH–P Reagent No. 125–100	Vial: 100 ml	5/29/73
Sigma Chemical Co	Levorphanol Tartrate 1 mg/ml, No. L–0896	Glass Ampule: 2 ml	6/29/89
Sigma Chemical Co	Lorazepam (L–0140)	Ampule: 1 ml	5/24/85
Sigma Chemical Co	Lormetazepam, No. 8145	Glass Ampule: 2 ml	6/6/89
Sigma Chemical Co	Lysergic Acid , Product No. L–5881	Sealed Ampule: 1 ml	6/30/77
Sigma Chemical Co	Lysergic Acid Diethylamide #L–8147	Ampule: 2 ml	8/28/90
Sigma Chemical Co	Lysergic Acid Diethylamide, Drug Standard No. L–5406	Ampule: 1 ml	8/17/94
Sigma Chemical Co	Mayer's Hematoxylin Solution, MHS–1, MHS–16, MHS–32, MHS–80, MHS–128.	Bottle: 3 ml, 6 ml, 25 ml, 100 ml, 225 ml, 500 ml, 1.0L, 2.5L, 4.0L.	8/6/73
Sigma Chemical Co	Mayer's Hematoxylin Solution, No. MHS–1	Bulk: 1000L	5/4/93
Sigma Chemical Co	Mebutamate (M–3772)	Ampule: 1 ml	9/5/85
Sigma Chemical Co	Medazepam (M–7646)	Ampule: 1 ml	5/24/85
Sigma Chemical Co	Meperidine Hydrochloride (M–1020)	Ampule: 1 ml	8/27/84
Sigma Chemical Co	Mephobarbital, Product No. M–3514	Vial: 1 ml	5/11/81
Sigma Chemical Co	Meprobamate (M–0271)	Ampule: 1 ml	5/24/85
Sigma Chemical Co	Mescaline HC1 , Product No. M–5153	Sealed Ampule: 1 ml	6/30/77
Sigma Chemical Co	Mesterolone, Product #M8283	Ampule: 2 ml	1/30/92
Sigma Chemical Co	Methadone Hydrochloride, Product No. M–3268	Sealed Ampule: 1 ml	9/19/83
Sigma Chemical Co	Methadone-d3 #M–4781	Ampule: 2 ml	8/28/90
Sigma Chemical Co	Methamphetamine HC1 , Product No. M–5260	Sealed Ampule: 1 ml	6/30/77
Sigma Chemical Co	Methandrostenolone, Product #M6910	Ampule: 2 ml	1/30/92
Sigma Chemical Co	Methaqualone Hydrochloride, Product No. M–3393	Sealed Ampule: 1 ml	9/19/83
Sigma Chemical Co	Methaqualone-d4 #M–5406	Ampule: 2 ml	8/28/90
Sigma Chemical Co	Methylphenidate Hydrochloride (M–1145)	Ampule: 1 ml	10/31/84
Sigma Chemical Co	Methyprylon, Product No. M–1769	Sealed Ampule: 1 ml	6/8/84
Sigma Chemical Co	Morphine Sulfate, No. M–9524	Glass Ampule: 2 ml	6/6/89
Sigma Chemical Co	Morphine-3-B-D Glucuronide, Product No. M–4266	Ampule: 1 ml	10/21/82
Sigma Chemical Co	Morphine-d3 HCl, M–6380	Ampule: 2 ml	9/25/91
Sigma Chemical Co	N, N-Diethyltryptamine, Product No. D–0392	Vial: 1 ml	5/11/81
Sigma Chemical Co	N, N-Dimethyltryptamine, Product No. D–6263	Sealed Ampule: 1 ml	6/30/77
Sigma Chemical Co	Nalorphine Hydrochloride	Ampule: 1 ml	8/27/84
Sigma Chemical Co	Nitrazepam, N–3397	Ampule: 1 ml	9/8/93
Sigma Chemical Co	Norcodeine Hydrochloride, No. N–3017	Glass Ampule: 2 ml	6/6/89
Sigma Chemical Co	Normorphine HCl #N–7393	Ampule: 2 ml	8/28/90
Sigma Chemical Co	Noroxymorphone #N–7018	Ampule: 2 ml	8/28/90
Sigma Chemical Co	Owren's Buffer, No. 05880	Bottle: 500 ml; Vial: 20 ml; Box: 5vials.	4/5/89
Sigma Chemical Co	Oxazepam, No. O–1755	Vial: 1 ml	6/30/87
Sigma Chemical Co	Oxazepam-d5 #O–1381	Ampule: 2 ml	8/28/90
Sigma Chemical Co	Oxazolam, No. O–8005	Glass Ampule: 2 ml	6/6/89
Sigma Chemical Co	Oxycodone Hydrochloride, Product No. O–2628	Sealed Ampule: 1 ml	9/19/83
Sigma Chemical Co	Oxymetholone, Product #O4006	Ampule: 2 ml	1/30/92
Sigma Chemical Co	Paraldehyde, Product No. P–3778	Ampule: 1 ml	10/21/82
Sigma Chemical Co	Pemoline, Product No. P–3518	Sealed Ampule: 1 ml	6/30/77
Sigma Chemical Co	Pentazocine Hydrochloride, Product No. P–7530	Sealed Ampule: 1 ml	9/19/83
Sigma Chemical Co	Pentobarbital, Product No. P–3393	Sealed Ampule: 1ml	6/30/77
Sigma Chemical Co	Phencyclidine HCL, Product #P7043	Vial: 1 ml	6/30/87
Sigma Chemical Co	Phencyclidine-d5 HCl #P–6054	Ampule: 2ml	8/28/90
Sigma Chemical Co	Phendimetrazine Bitartrate, Product #P3524	Vial: 1ml	5/11/81
Sigma Chemical Co	Phenobarbital FPIA Calibrator Set Cat. No. P9051	Kit: 6 vials	11/21/89
Sigma Chemical Co	Phenobarbital FPIA Calibrator: A-No.P8301, B-No.P8426, C-No.P8551, D-No.P8676, E-No.P8801, F-No.P8926.	Vial: 2.5 ml	11/21/89
Sigma Chemical Co	Phenobarbital Primary Stock Solution No. Z–5419	Bottle: 10, 5, 1L, 500, 100ml	2/1/91
Sigma Chemical Co	Phenobarbital Prod. No.P–3643	Sealed Ampule: 1ml	6/30/77
Sigma Chemical Co	Phentermine Hydrochloride, Product No. P–7655	Sealed Ampule: 1ml	9/19/83
Sigma Chemical Co	Phenylacetone, Product #P3958	Ampule: 1ml	5/10/95
Sigma Chemical Co	Phenylacetone, Product No. P–2024	Vial: 1ml	5/11/81
Sigma Chemical Co	Prazepam, No. P–7168	Vial: 1 ml	6/30/87

EXEMPT CHEMICAL PREPARATIONS—Continued

Supplier	Product name	Form	Date
Sigma Chemical Co	Psilocin #P–4054	Ampule: 2ml	8/28/90
Sigma Chemical Co	SIA Cocaine Metabolites	Kit: 96 Tests	7/11/91
Sigma Chemical Co	SIA Conjugate Cocaine Metabolites	Bottle: 75ml	7/11/91
Sigma Chemical Co	SIA Positive Reference Cocaine Metabolites	Vial: 1ml	7/11/91
Sigma Chemical Co	Secobarbital, Product No. S–4006	Sealed Ampule: 1ml	6/30/77
Sigma Chemical Co	Secobarbital-d5, S–4628	Ampule: 2ml	9/25/91
Sigma Chemical Co	Stanozolol, Product #S7649	Ampule: 2ml	1/30/92
Sigma Chemical Co	Stanozolol-d3, Product #S7774	Ampule: 2ml	1/30/92
Sigma Chemical Co	Temazepam, No. T–4903	Vial: 1 ml	6/30/87
Sigma Chemical Co	Tenocyclidine HCl, T–3507	Ampule: 2ml	9/25/91
Sigma Chemical Co	Testosterone 17beta-Cypionate, T 3415	Ampule: 1ml	7/30/92
Sigma Chemical Co	Testosterone Acetate, Product #T5661	Ampule: 2ml	1/30/92
Sigma Chemical Co	Testosterone Benzoate, Product #T1913	Ampule: 2ml	1/30/92
Sigma Chemical Co	Testosterone Enanthate, T 3540	Ampule: 1ml	7/30/92
Sigma Chemical Co	Testosterone Propionate, T 3665	Ampule: 1ml	7/30/92
Sigma Chemical Co	Testosterone, Product #T5411	Ampule: 2ml	1/30/92
Sigma Chemical Co	Testosterone-d3, Product #T5536	Ampule: 2ml	1/30/92
Sigma Chemical Co	Thebaine, Product No. T–5270	Sealed Ampule: 1ml	9/19/83
Sigma Chemical Co	Thiamylal Sodium, Product No. T–6896	Sealed Ampule: 1ml	6/8/84
Sigma Chemical Co	Thiopental (T–1022)	Ampule: 1ml	8/27/84
Sigma Chemical Co	Triazolam #T–7658	Ampule: 2ml	8/28/90
Sigma Chemical Co	Trizma-Barbital Buffer, Stock No. 710–1	Bottle: 30ml	1/4/77
Sigma Chemical Co	Tropacocaine HCL, Product #T4576	Vial: 1ml	5/11/81
Sigma Chemical Co	Z9999, Field Test Sample PSEUDOnarcotics Marihuana Formulation.	Vial: 400ml	3/14/91
Sigma Chemical Co	d-Amphetamine-d3 Sulfate #A–7180	Ampule: 2ml	8/28/90
Sigma Chemical Co	d-Lysergic Acid Cat. No. L–9752	Ampule: 2ml	11/6/91
Sigma Chemical Co	d-Propoxyphene-d7 HCl #P–4179	Ampule: 2ml	8/28/90
Sigma Chemical Co	delta-9-tetrahydrocannabinol-d3 #T–8783	Ampule: 2ml	8/28/90
Sigma Chemical Co	dl-Amphetamine, A–2262	Ampule: 2ml	9/25/91
Sigma Chemical Co	l-Amphetamine, A–9136	Ampule: 2ml	9/25/91
Sigma Chemical Co	p-Methoxyamphetamine HCl #M–4656	Ampule: 2ml	8/28/90
Sigma Diagnostics	Amelung Systems Buffer	Box: 6 Vials; Bottle: 25ml	2/8/96
Sigma Diagnostics	CA System Buffer	Bottle: 500ml	9/9/93
Smart Chemical Co	Regal 180XL	Plastic Drum: 55 gallon	6/12/86
SmithKline Beecham	Benzo/PCP QC	Bottle: 10ml	7/31/95
SmithKline Beecham	GC/MS 1	Bottle: 50ml	7/31/95
SmithKline Beecham	NIDA LODQC	Bottle: 50ml	7/31/95
SmithKline Beecham	SAP LODQC	Bottle: 50ml	7/31/95
SmithKline Beecham	SB50N	Bottle: 10, 25, 50ml	7/31/95
SmithKline Beecham	SB50P	Bottle: 10, 25, 50ml	7/31/95
SmithKline Beecham	Urine Drug Standards Pool A, B, C, D, E, F, G	Bottle: 25ml	7/31/95
SolarCare Technology Corporation.	Benzoylecgonine Cutoff Calibrator	Vial: 4ml	6/5/90
SolarCare Technology Corporation.	Benzoylecgonine Negative Control	Vial: 4ml	6/5/90
SolarCare Technology Corporation.	Benzoylecgonine Positive Control	Vial: 4ml	6/5/90
SolarCare Technology Corporation.	Cocaine Cutoff Calibrator	Vial: 4ml	6/5/90
SolarCare Technology Corporation.	Cocaine EIA	Kit: 3 vials	6/5/90
SolarCare Technology Corporation.	Cocaine Metabolite EIA	Kit: 30 vials	6/5/90
SolarCare Technology Corporation.	Cocaine Negative Control	Vial: 4ml	6/5/90
SolarCare Technology Corporation.	Cocaine Positive Control	Vial: 4ml	6/5/90
SolarCare Technology Corporation.	LSD Cutoff Calibrator	Vial: 4ml	6/5/90
SolarCare Technology Corporation.	LSD EIA	Kit: 3 vials	6/5/90
SolarCare Technology Corporation.	LSD Negative Control	Vial: 4ml	6/5/90
SolarCare Technology Corporation.	LSD Positive Control	Vial: 4ml	6/5/90
SolarCare Technology Corporation.	Low Level Benzodiazepine (Triazolam) EIA	Kit: 3 vials	6/5/90
SolarCare Technology Corporation.	Triazolam Cutoff Control	Vial: 4ml	6/5/90
SolarCare Technology Corporation.	Triazolam Negative Control	Vial: 4ml	6/5/90

EXEMPT CHEMICAL PREPARATIONS—Continued

Supplier	Product name	Form	Date
SolarCare Technology Corporation.	Triazolam Positive Control	Vial: 4ml	6/5/90
Supelco, Inc	Gamma-DEX Programmed Column Test Mix	Ampule: 1ml	9/15/95
Supelco, Inc	Alk Mix No. 04–9210	Vial: 1ml	8/28/73
Supelco, Inc	Amobarbital, No. 04–9170	Ampule: 1ml	12/22/72
Supelco, Inc	Amph. Mix Catalog No. 4–9205	Glass Ampule: 2ml	6/9/86
Supelco, Inc	Amphetamine No. 04–9165	Ampule: 1ml	12/22/72
Supelco, Inc	Anticonvulsant Mixture No. 1; No. 04–9202	Glass Serum Bottle: 50ml	6/16/77
Supelco, Inc	Antiepileptic Calibration Standard Kit, No. 4–9259	Kit: 3 Ampules	5/21/80
Supelco, Inc	Antiepileptic Calibration Standards, Nos. 4–9256, 4–9257, 4–9258.	Glass Ampule: 5ml	5/21/80
Supelco, Inc	Appendix IX Contract Mix 3	Ampule: 2ml	12/22/94
Supelco, Inc	Aprobarbital No. 04–9171	Ampule: 1ml	12/22/72
Supelco, Inc	Barb. Mix 1, Catalog No. 4–9200	Glass Ampule: 2ml	6/9/86
Supelco, Inc	Barb. Mix 2, Catalog No. 4–9201	Glass Ampule: 2ml	6/9/86
Supelco, Inc	Barbital, Catalog No. 4–9279	Glass Ampule: 10ml	6/9/86
Supelco, Inc	Barbiturates Test Mix Catalog No. 4–9295	Ampule: 2 ml	2/25/87
Supelco, Inc	Cannabidiol, No. 04–9221	Ampule: 1ml	11/27/74
Supelco, Inc	Cannabinol, No. 04–9235	Ampule: 1ml	11/27/74
Supelco, Inc	Chloral Hydrate Kit, Product # 4–8112	Kit: 19 Vials; 2ml each	9/6/94
Supelco, Inc	Chloral Hydrate, Product # 4–7335	Ampule: 2ml	9/15/95
Supelco, Inc	Cocaine, No. 04–9188	1000 mcg /Glass Ampule	6/5/75
Supelco, Inc	Codeine No. 04–9161	Ampule: 1ml	12/22/72
Supelco, Inc	Custom Appendix IX Mix-3, Product # 86–8043	Ampule: 10ml	4/6/95
Supelco, Inc	Cyclobarbital No. 04–9175	Ampule: 1ml	12/22/72
Supelco, Inc	Delta-1 THC, No. 04–9237	Ampule: 1ml	11/27/74
Supelco, Inc	Delta-6 THC, No. 04–9238	Ampule: 1ml	11/27/74
Supelco, Inc	Dextroamphetamine, No. 4–9185	Glass Ampule: 1ml	5/21/80
Supelco, Inc	EPA 8270 Base/Neutrals Mix B, Product # 4–8195	Vial: 2ml	8/31/94
Supelco, Inc	Glutethimide No. 04–9173	Ampule: 1ml	12/22/72
Supelco, Inc	Heroin No. 04–9162	Ampule: 1ml	12/22/72
Supelco, Inc	Hexobarbital No. 04–9177	Ampule: 1ml	12/22/72
Supelco, Inc	Mephobarbital No. 04–9178	Ampule: 1ml	12/22/72
Supelco, Inc	Meprobamate, No. 4–9184	Glass Ampule: 1ml	5/21/80
Supelco, Inc	Methadone No. 04–9163	Ampule: 1ml	12/22/72
Supelco, Inc	Methamphetamine No. 04–9168	Ampule: 1ml	12/22/72
Supelco, Inc	Methaqualone, No. 04–9183	1000 mcg /Glass Ampule	6/5/75
Supelco, Inc	Morphine No. 04–9160	Glass Ampule: 1000mcg	3/8/78
Supelco, Inc	NET Appendix IX Mix-3, Product # 86–8–58	Ampule: 2ml	5/3/95
Supelco, Inc	Pentobarbital No. 04–9179	Glass Ampule: 1000mcg	3/8/78
Supelco, Inc	Phenobarbital No. 04–9181	Glass Ampule: 1000mcg	3/8/78
Supelco, Inc	Psilocybin, No. 04–9191	1000 mcg /Glass Ampule	6/5/75
Supelco, Inc	Secobarbital No. 04–9180	Glass Ampule: 1000mcg	3/8/78
Supelco, Inc	alpha, alpha-Dimethylphenethylamine	Ampule: 2ml	2/7/95
Supelco, Inc	alpha, alpha-Dimethylphenethylamine, Product # 4–8377	Vial: 2ml	8/31/94
Sure-Tech Diagnostic Associates, Inc.	3, 4-Methylenedioxyamphetamine in Urine Matrix; Prod 928	Vial: 20ml	4/24/92
Sure-Tech Diagnostic Associates, Inc.	3, 4-Methylenedioxymethylamphetamine in Urine Matrix; Prod 929.	Vial: 20ml	4/24/92
Sure-Tech Diagnostic Associates, Inc.	Alprazolam in Urine Matrix; Prod. 920	Vial: 20ml	4/24/92
Sure-Tech Diagnostic Associates, Inc.	Codeine in Urine Matrix; Prod 924	Vial: 20ml	4/24/92
Sure-Tech Diagnostic Associates, Inc.	D-Methamphetamine/D-Amphetamine in Urine Matrix; Prod 926.	Vial: 20ml	4/24/92
Sure-Tech Diagnostic Associates, Inc.	D-Propoxyphene in Urine Matrix; Prod 936	Vial: 20ml	4/24/92
Sure-Tech Diagnostic Associates, Inc.	Drugs of Abuse Urine Control (Blind Sample) Positive Amphetamine Kit No. ST 904, Vial No. 904–P.	Vial: 4ml Kit: 1 vial	5/11/90
Sure-Tech Diagnostic Associates, Inc.	Drugs of Abuse Urine Control (Blind Sample) Positive Cocaine & Marijuana Kit No. ST 903.	Kit: 2 vials	5/11/90
Sure-Tech Diagnostic Associates, Inc.	Drugs of Abuse Urine Control (Blind Sample) Positive Cocaine, Kit No. ST 901, Vial No. 901–P.	Vial: 4ml Kit: 1 vial	5/11/90
Sure-Tech Diagnostic Associates, Inc.	Drugs of Abuse Urine Control (Blind Sample) Positive Marijuana, Kit No. ST 902, Vial No. 902–P.	Vial: 4ml Kit: 1 vial	5/11/90
Sure-Tech Diagnostic Associates, Inc.	Drugs of Abuse Urine Control (Blind Sample) Positive Opiates Kit No. ST 905, Vial No. 905–P.	Vial: 4ml Kit: 1 vial	5/11/90
Sure-Tech Diagnostic Associates, Inc.	Drugs of Abuse Urine Control (Blind Sample) Positive Phencyclidine Kit No. ST 906, Vial No. 906–P.	Vial: 4ml Kit: 1 vial	5/11/90
Sure-Tech Diagnostic Associates, Inc.	Drugs of Abuse: Urine Controls (Blind Samples) positive Codeine No. 907–P.	Vial: 20ml; Box: 1 vial	9/13/90

EXEMPT CHEMICAL PREPARATIONS—Continued

Supplier	Product name	Form	Date
Sure-Tech Diagnostic Associates, Inc.	Drugs of Abuse: Urine Controls (Blind Samples) positive Methadone No. 908–P.	Vial: 20ml; Box: 1 vial	9/13/90
Sure-Tech Diagnostic Associates, Inc.	Drugs of Abuse: Urine Controls (Blind Samples) positive Methamphetamine No. 909–P.	Vial: 20ml; Box: 1 vial	9/13/90
Sure-Tech Diagnostic Associates, Inc.	Drugs of Abuse: Urine Controls (Blind Samples) positive Methaqualone No. 913–P.	Vial: 20ml, Box: 1 vial	9/13/90
Sure-Tech Diagnostic Associates, Inc.	Drugs of Abuse: Urine Controls (Blind Samples) positive Oxazepam No. 910–P.	Vial: 20ml, Box: 1 vial	9/13/90
Sure-Tech Diagnostic Associates, Inc.	Drugs of Abuse: Urine Controls (Blind Samples) positive Propoxyphene No. 911–P.	Vial: 20ml, Box: 1 vial	9/13/90
Sure-Tech Diagnostic Associates, Inc.	Drugs of Abuse: Urine Controls (Blind Samples) positive Secobarbital No. 912–P.	Vial: 20ml, Box: 1 vial	9/13/90
Sure-Tech Diagnostic Associates, Inc.	Meperidine in Urine Matrix; Prod 930	Vial: 20ml	4/24/92
Sure-Tech Diagnostic Associates, Inc.	Methadone in Urine Matrix; Prod 925	Vial: 20ml	4/24/92
Sure-Tech Diagnostic Associates, Inc.	Methaqualone in Urine Matrix; Prod 927	Vial: 20ml	4/24/92
Sure-Tech Diagnostic Associates, Inc.	Morphine-3-Glucuronide in Urine Matrix; Prod 931	Vial: 20ml	4/24/92
Sure-Tech Diagnostic Associates, Inc.	Nordiazepam in Urine Matrix; Prod 932	Vial: 20ml	4/24/92
Sure-Tech Diagnostic Associates, Inc.	Normeperidine in Urine Matrix; Prod 933	Vial: 20ml	4/24/92
Sure-Tech Diagnostic Associates, Inc.	Oxazepam in Urine Matrix; Prod 934	Vial: 20ml	4/24/92
Sure-Tech Diagnostic Associates, Inc.	Phencyclidine in Urine Matrix; Prod 935	Vial: 20 ml	4/24/92
Sure-Tech Diagnostic Associates, Inc.	Secobarbital in Urine Matrix; Prod 937	Vial: 20ml	4/24/92
Sure-Tech Diagnostic Associates, Inc.	Temazepam in Urine Matrix; Prod 938	Vial: 20ml	4/24/92
Sure-Tech Diagnostic Associates, Inc.	Triazolam in Urine Matrix; Prod 939	Vial: 20ml	4/24/92
Sure-Tech Diagnostics Associates, Inc.	9-Carboxyl-11 Nor-A-9-THC in Urine Matrix; Prod 923	Vial: 20ml	4/24/92
Sure-Tech Diagnostics Associates, Inc.	Benzoylecgonine in Urine Matrix; Prod 922	Vial: 20ml	4/24/92
Sure-Tech Diagnostics Associates, Inc.	D-Amphetamine in Urine Matrix; Prod. 921	Vial: 20ml	4/24/92
Syva Co	AccuLevel Phenobarbital Test Control Stock Solution	Flask: 50ml	10/31/85
Syva Co	AccuLevel Phenobarbital Test Kit (Catalog No. 10C019) Contains: (1) AccuLevel Phenobarbital Control (2) AccuLevel Reagent I.	(1) Glass Vial: 6ml; (2) Glass Vial: 9ml, 12 Vials per test kit.	1/24/86
Syva Co	Advance T-3 Uptake Assay	Kit: 100 tests	5/11/82
Syva Co	Advance Thyroxin Assay	Kit: 100 tests	5/11/82
Syva Co	Antiepileptic Drug Control	Vial: 10ml , Lyophilized	8/27/74
Syva Co	EMIT 2000 Phenobarbital Bulk Reagent 1	Bottle: 1000ml	7/14/94
Syva Co	EMIT 2000 Phenobarbital Bulk Reagent B	Bottle: 200ml	2/22/93
Syva Co	EMIT 2000 Phenobarbital Calibrators 5, 10, 20, 40 and 80	Bottle: 3ml	7/14/94
Syva Co	EMIT IIC Cannabinoid Assay Reagent 2	Bottle: 500ml	12/15/93
Syva Co	EMIT IIC Cannabinoid Assay	Kit: 2 Bottles	12/15/93
Syva Co	EMIT IIC Phencyclidine Assay	Kit: 2 Bottles	12/15/93
Syva Co	EMIT IIC Phencyclidine Assay Reagent 2	Bottle: 500ml	12/15/93
Syva Co	EMIT Thyroxine Assay, Cat. No. 6J909	Glass Bottle: 4oz., Kit: 500 Assays.	1/23/89
Syva Co	Emit 2000 Phenobarbital Assay (Convenience Pack)	Kit: 1 cassette; Cassette: 11ml	8/5/91
Syva Co	Emit 2000 Phenobarbital Assay; Enzyme Reagent 2	Kit: 1 bottle; Bottle: 15ml	8/5/91
Syva Co	Emit 2000 Phenobarbital Bulk Reagent	Bottle: 200ml	6/9/93
Syva Co	Emit 2000 Phenobarbital Calibrators (5, 10, 20, 40, 80)	Kit: 5 vials	8/5/91
Syva Co	Emit 700 Amphetamine Assay Catalog No. 3C919	Bottle: 180ml	10/12/84
Syva Co	Emit 700 Barbiturate Assay Catalog No.3D919	Bottle: 180ml	10/12/84
Syva Co	Emit 700 Benzodiazepine Assay Reagent 2	Glass Bottle: 180ml, Kit: 2 bottles.	2/21/89
Syva Co	Emit 700 Calibrator A Catalog No. 3A919	Bottle: 3ml	10/5/84
Syva Co	Emit 700 Calibrator B Catalog No. 3A969	Bottle: 3ml	10/5/84
Syva Co	Emit 700 Cannabinoid (100) Assay Catalog No. 3M919	Bottle: 180ml	10/12/84
Syva Co	Emit 700 Cannabinoid (100) Calibrator Catalog No. 3M969	Bottle: 3ml	10/9/84
Syva Co	Emit 700 Cannabinoid (20) Assay, Catalog No. 3M959	Plastic Bottle: 180ml	9/15/86
Syva Co	Emit 700 Cannabinoid 100ng Assay, Positive Control	Bottle: 3ml	7/31/89
Syva Co	Emit 700 Cannabinoid 20ng Assay Calibrator	Glass Bottle: 5ml, Kit: 2 bottles	2/21/89

EXEMPT CHEMICAL PREPARATIONS—Continued

Supplier	Product name	Form	Date
Syva Co	Emit 700 Cannabinoid 20ng Assay Control Set-Positive Control.	Glass Bottle: 5ml, Kit: 2 bottles	2/21/89
Syva Co	Emit 700 Cannabinoid Control Set Catalog No. 3M989	2 Bottles: 3ml	10/9/84
Syva Co	Emit 700 Cocaine Metabolite Assay Catalog No. 3H919	Bottle: 180ml	10/12/84
Syva Co	Emit 700 Control Set A Catalog No. 3A939	2 Bottles: 3ml	10/9/84
Syva Co	Emit 700 Control Set B Catalog No. 3A989	2 Bottles: 3ml	10/9/84
Syva Co	Emit 700 Methaqualone Assay Catalog No. 3Q919	Bottle: 180ml	10/19/84
Syva Co	Emit 700 Opiate Assay Catalog No.3B919	Bottle: 180ml	10/12/84
Syva Co	Emit 700 Phencyclidine Assay Catalog No. 3J919	Bottle: 180ml	10/12/84
Syva Co	Emit AED-No. 1 Calibrator	Vial: 3ml , Lyophilized	8/27/74
Syva Co	Emit AED-No. 2 Calibrator	Vial: 3ml , Lyophilized	8/27/74
Syva Co	Emit AED-No. 3 Calibrator	Vial: 3ml , Lyophilized	8/27/74
Syva Co	Emit AED-No. 4 Calibrator	Vial: 3ml , Lyophilized	8/27/74
Syva Co	Emit AED-No. 5 Calibrator	Vial: 3ml , Lyophilized	8/27/74
Syva Co	Emit Amphetamine Bulk Powder Reagent 2	Bottle: 1000ml	10/4/89
Syva Co	Emit Amphetamine Bulk Powder Reagent 2 Satellite	Bottle: 4 oz	4/20/90
Syva Co	Emit Amphetamine Bulk Reagent B	Glass bottle: 1000ml	12/5/90
Syva Co	Emit Barbiturate Bulk Powder Reagent 2	Bottle: 1000ml	10/4/89
Syva Co	Emit Barbiturate Bulk Powder Reagent 2 Satellite	Bottle: 4 oz	4/20/90
Syva Co	Emit Barbiturate Bulk Reagent B	Glass Bottle: 1000ml	12/5/90
Syva Co	Emit Benzodiazepine Bulk Powder Reagent 2	Bottle: 1000ml	10/4/89
Syva Co	Emit Benzodiazepine Bulk Powder Reagent 2 Satellite	Bottle: 4 oz	4/20/90
Syva Co	Emit Benzodiazepine Bulk Reagent B	Glass Bottle: 1000ml	12/5/90
Syva Co	Emit Calibrator B Level 1 (cutoff)	Vial: 5ml, 25ml	6/19/91
Syva Co	Emit Calibrator B Level 2 (high)	Vial: 5ml, 25ml	6/19/91
Syva Co	Emit Cannabinoid (100) Bulk Powder Reagent 2	Bottle: 1000ml	10/4/89
Syva Co	Emit Cannabinoid (100) Bulk Powder Reagent 2 Satellite	Bottle: 4 oz	4/20/90
Syva Co	Emit Cannabinoid Bulk Reagent B	Glass bottle: 1000ml	12/5/90
Syva Co	Emit Cocaine Metabolite Bulk Powder Reagent 2	Bottle: 1000ml	10/4/89
Syva Co	Emit Cocaine Metabolite Bulk Powder Reagent 2 Satellite	Bottle: 4 oz	4/20/90
Syva Co	Emit Cocaine Metabolite Bulk Reagent B	Glass Bottle: 1000ml	12/5/90
Syva Co	Emit Convenience Pack Phenobarbital Assay: Catalog No. 5D009.	Plastic Cassette: 100 tests	11/23/87
Syva Co	Emit Convenience Pack: T-Uptake Assay (Thyroid Hormone Binding Ratio).	Kit: 100 Tests Ea. Kit-Plastic Cassette: 16 ml.	5/9/88
Syva Co	Emit Convenience Pack: Thyroxine Assay Enzyme Reagent B	Plastic Cassette: 8ml, Kit: 100 Assays.	2/22/89
Syva Co	Emit Delta 9 Cannabinoid 100 ng/ml Calibrator/Control	Vial: 3ml	8/22/89
Syva Co	Emit Delta 9 Cannabinoid 20 ng/ml Calibrator/Control	Vial: 3ml	8/22/89
Syva Co	Emit Delta 9 Cannabinoid 400 ng/ml Calibrator/Control	Vial: 3ml	8/22/89
Syva Co	Emit Delta 9 Cannabinoid 50 ng/ml Calibrator/Control	Vial: 3ml	8/22/89
Syva Co	Emit HVA Amphetamine Assay Catalog No. 3C619	Kit: 2500 Assays	6/30/88
Syva Co	Emit HVA Barbiturate Assay Catalog No. 3D619	Kit: 2500 Assays	6/30/88
Syva Co	Emit HVA Calibrator Kit Catalog No. 3A619	Kit: 500 Tests Each Kit - 2 Glass Bottles 100 ml.	5/10/88
Syva Co	Emit HVA Cannabinoid 100 ng Assay Control Kit, Catalog No. 3M739.	Kit: 2 Bottles, 50 ml ea	7/15/88
Syva Co	Emit HVA Cannabinoid 100 ng. Assay Calibrator Kit, Catalog No. 3M729.	Kit: 3 Bottles 50 ml ea	7/15/88
Syva Co	Emit HVA Cannabinoid 100 ng. Assay Kit, Catalog No. 3M719	Kit: 2500 Assays	7/15/88
Syva Co	Emit HVA Cocaine Metabolite Assay Catalog No. 3H619	Bottle: 125 ml	5/10/88
Syva Co	Emit HVA Control Kit Catalog No. 3A629	Kit: 500 Tests Each Kit-2 Glass Bottles—100ml.	5/10/88
Syva Co	Emit HVA Opiate Assay Catalog No. 3B619	Bottle: 125ml	5/10/88
Syva Co	Emit HVA Phencyclidine Assay Catalog No. 3J619	Bottle: 125ml	5/19/88
Syva Co	Emit II Barbiturate Assay	Kit: 100ml, 500ml Bottle: 4oz, 500ml.	6/29/90
Syva Co	Emit II Calibrator A Level 1 (Cutoff)	Vial: 10ml, 50ml	6/29/90
Syva Co	Emit II Calibrator A Level 2 (high)	Vial: 10ml, 50ml	6/29/90
Syva Co	Emit II Cannabinoid 20ng, 50ng, 100ng Assay	Bottle: 4oz, 500ml; Kit: 100ml, 500ml.	10/12/90
Syva Co	Emit II Cocaine Metabolite Assay	Kit: 100ml, 500ml Bottle: 4oz, 500ml.	6/29/90
Syva Co	Emit II Delta 9 Cannabinoid 20ng/ml, 50ng/ml, 100ng/ml, 200ng/ml, Calibrator/Control.	Vial: 10ml, 50ml	10/12/90
Syva Co	Emit II Methadone Assay	Kit: 2 vials	1/26/93
Syva Co	Emit II Methadone Assay Reagent 2	Bottle: 100ml, 500ml	1/26/93
Syva Co	Emit II Methaqualone Assay	Kit: 2 vials	1/26/93
Syva Co	Emit II Methaqualone Assay Reagent 2	Bottle: 100ml, 500ml	1/26/93
Syva Co	Emit II Monoclonal Amphetamine/Methamphetamine Assay	Kit: 2 vials	1/26/93
Syva Co	Emit II Monoclonal Amphetamine/Methamphetamine Assay Enzyme Reagent 2.	Vial: 100ml, 500ml	1/26/93

EXEMPT CHEMICAL PREPARATIONS—Continued

Supplier	Product name	Form	Date
Syva Co	Emit II Opiate Assay	Kit: 100ml, 500ml Bottle: 4oz, 500ml.	6/29/90
Syva Co	Emit II Phencyclidine Assay	Bottle: 4oz, 500ml; Kit: 100ml, 500ml.	10/26/90
Syva Co	Emit IIC Barbiturate Assay	Kit: 2 Vials	1/6/94
Syva Co	Emit IIC Barbiturate Enzyme Reagent 2	Vial: 500ml	1/6/94
Syva Co	Emit IIC Calibrators 0, 1, 2, 3, 4, 5	Vial: 10ml	1/6/94
Syva Co	Emit IIC Opiate Assay	Kit: 2 Vials	1/6/94
Syva Co	Emit IIC Opiate Enzyme Reagent 2	Vial: 500ml	1/6/94
Syva Co	Emit Methadone Bulk Powder Reagent 2	Bottle: 1000 ml	10/4/89
Syva Co	Emit Methadone Bulk Powder Reagent 2 Satellite	Bottle: 4 oz	4/20/90
Syva Co	Emit Methadone Bulk Reagent	Bottle: 1000ml	6/7/93
Syva Co	Emit Methaqualone Bulk Powder Reagent 2	Bottle: 1000 ml	10/4/89
Syva Co	Emit Methaqualone Bulk Powder Reagent 2 Satellite	Bottle: 4 oz	4/20/90
Syva Co	Emit Opiate Bulk Powder Reagent 2	Bottle: 1000 ml	10/4/89
Syva Co	Emit Opiate Bulk Powder Reagent 2 Satellite	Bottle: 4 oz	4/20/90
Syva Co	Emit Opiate Bulk Reagent B	Glass bottle: 1000ml	12/5/90
Syva Co	Emit Phencyclidine Bulk Powder Reagent 2	Bottle: 1000 ml	10/4/89
Syva Co	Emit Phencyclidine Bulk Powder Reagent 2 Satellite	Bottle: 4 oz	4/20/90
Syva Co	Emit Phencyclidine Bulk Reagent B	Glass Bottle: 1000ml	12/5/90
Syva Co	Emit Phenobarbital Bulk Powder Reagent B	Bottle: 1000 ml	10/4/89
Syva Co	Emit Phenobarbital Bulk Powder Reagent B Satellite	Bottle: 4 oz	4/20/90
Syva Co	Emit Phenobarbital Enzyme Reagent B	Vial: 6 ml , Lyophilized	8/27/74
Syva Co	Emit Qst Phenobarbital Bulk Powder Reagent	Steel Drum: 7 gallon	6/5/86
Syva Co	Emit Qst Primidone Assay Catalog No. 60819	Glass Vial: 6ml, 50 Vials/Kit	11/12/85
Syva Co	Emit Serum Barbiturate-Enzyme Reagent B	Bottle: 3ml	5/22/79
Syva Co	Emit T-Uptake Assay	Bottle: 4 oz., 1L, Kit: 500 tests, 5000 tests.	5/25/89
Syva Co	Emit T-Uptake Assay (Thyroid Hormone Binding Ratio) Catalog No. 6J519.	Polyethylene Bottle: 4 oz	2/29/88
Syva Co	Emit T-Uptake Bulk Powder Reagent A	Bottle: 1000 ml	10/4/89
Syva Co	Emit T-Uptake Bulk Powder Reagent A Satellite	Bottle: 4 oz	4/20/90
Syva Co	Emit THC 50/100ng Assay	Kit; 2vials, 500ml each	10/11/93
Syva Co	Emit THC Calibrators; 0ng/mlk, 50ng/ml, 100ng/ml, 200ng/ml	Vial: 10ml	10/11/93
Syva Co	Emit THC Controls; Levels I, II, III, IV	Vial: 10ml	10/11/93
Syva Co	Emit Thyroxine Assay	Glass Bottle: 8 oz., 1L, Kit: 1300 tests, 5000 tests.	5/25/89
Syva Co	Emit Thyroxine Bulk Powder Reagent B	Bottle: 1000 ml	10/4/89
Syva Co	Emit Thyroxine Bulk Powder Reagent B Satellite	Bottle: 4 oz	4/20/90
Syva Co	Emit Tox Serum Benzodiazepine Assay Kit Containing: Emit Enzyme Reagent B.	Bottle: 3ml	2/1/79
Syva Co	Emit d.a.u. Amphetamine Assay Catalog Nos. 3C019, 3C119	Kit: 100 tests, 1000 tests	9/27/84
Syva Co	Emit d.a.u. Amphetamine Class Low Calibrator, Cat. No. 3C179.	Glass Vial: 5ml	1/30/89
Syva Co	Emit d.a.u. Amphetamine Class Medium Calibrator, Cat. No. 3C189.	Glass Vial: 5ml	1/30/89
Syva Co	Emit d.a.u. Barbiturate Assay Catalog Nos. 3D019, 3D119	Kit: 100 tests, 1000 tests	9/27/84
Syva Co	Emit d.a.u. Benzodiazepine Assay Catalog Nos. 3F019, 3F119.	Kit: 100 tests, 1000 tests	9/27/84
Syva Co	Emit d.a.u. Cannabinoid 100 ng Assay, Catalog No. 3M119	Kit: 1000 tests	9/12/86
Syva Co	Emit d.a.u. Cannabinoid 100ng Assay Calibrator	Kit: 3 vials	7/31/89
Syva Co	Emit d.a.u. Cannabinoid 100ng Assay Low Calibrator	Vial: 3ml	7/31/89
Syva Co	Emit d.a.u. Cannabinoid 100ng Assay Medium Calibrator	Vial: 3ml	7/31/89
Syva Co	Emit d.a.u. Cannabinoid 20ng Assay Catalog No. 3M619	Kit: 100 tests	2/10/86
Syva Co	Emit d.a.u. Cannabinoid 20ng Enzyme Reagent B	Vial: 10ml Lyophilized Powder	2/10/86
Syva Co	Emit d.a.u. Cannabinoid 50 ng Assay Calibrators, Low And Medium: Cat. No. 3M509.	Vial: 5 ml	6/1/88
Syva Co	Emit d.a.u. Cannabinoid 50 ng Assay: Cat. No. 3M519	Kit: 100 tests	6/1/88
Syva Co	Emit d.a.u. Cannabinoid Assay Catalog No. 3M019	Kit: 100 tests	9/24/84
Syva Co	Emit d.a.u. Cannabinoid Urine Calibrator Set	Kit: 3 Vials, 3ml Each	1/3/80
Syva Co	Emit d.a.u. Cocaine Metabolite Assay Catalog Nos. 3H019, 3H119.	Kit: 100 tests, 1000 tests	9/27/84
Syva Co	Emit d.a.u. Low Calibrator A	Bottle: 5ml	7/20/84
Syva Co	Emit d.a.u. Low Calibrator A	Vial: 5 ml	6/30/89
Syva Co	Emit d.a.u. Low Calibrator A, Catalog No. 3C579	5 ml vial	10/6/88
Syva Co	Emit d.a.u. Low Calibrator B	Bottle: 5ml	8/3/84
Syva Co	Emit d.a.u. Medium Calibrator A	Bottle: 5ml	7/20/84
Syva Co	Emit d.a.u. Medium Calibrator A	Vial: 5 ml	6/30/89
Syva Co	Emit d.a.u. Medium Calibrator A, Catalog No. 3C569	5 ml vial	10/6/88
Syva Co	Emit d.a.u. Medium Calibrator B	Bottle: 5ml	8/3/84
Syva Co	Emit d.a.u. Methadone Assay Catalog Nos. 3E019, 3E119	Kit: 100 tests, 1000 tests	10/5/84

EXEMPT CHEMICAL PREPARATIONS—Continued

Supplier	Product name	Form	Date
Syva Co	Emit d.a.u. Monoclonal Amphetamine/Methamphetamine Assay, Catalog No3C549 100 tests, 3C559 1000 tests.	Kit: 100 tests, 1000 tests	10/6/88
Syva Co	Emit d.a.u. Opiate Assay Catalog Nos. 3B019, 3B119	Kit: 100 tests, 1000 tests	9/27/84
Syva Co	Emit d.a.u. Phencyclidine Assay Kit Containing: (1)Emit Phencyclidine Enzyme Reagent B.	Bottle: 6ml	2/1/79
Syva Co	Emit-Qst Phenobarbital Assay, Catalog Number 6D819	Kit: 50 Vials	1/18/84
Syva Co	Emit-Tox Serum Barbiturate Assay	Kit: 50 tests	5/22/79
Syva Co	Emit-Tox Serum Calibrators; Low and Medium	Bottle: 3ml	2/1/79
Syva Co	Emit-d.a.u. Methaqualone Assay	Kit: 100 tests	4/27/82
Syva Co	Emit-st Amphetamine Assay	Vial: 3ml, 80 vials/kit	10/3/80
Syva Co	Emit-st Barbiturate Assay	Vial: 3ml, 80 vials/kit	10/3/80
Syva Co	Emit-st Benzodiazepine Assay	Vial: 3ml, 80 vials/kit	10/3/80
Syva Co	Emit-st Cannabinoid Assay Catalog No. 3M319	Vial: 6ml, 80 Vials/Kit	9/27/84
Syva Co	Emit-st Cannabinoid Calibrator	Vial: 3ml, 2 vials/kit	7/10/81
Syva Co	Emit-st Cannabinoid Controls	Vial: 3ml, 2 vials/kit	7/10/81
Syva Co	Emit-st Opiate Assay	Kit: 3ml, 80 vials/kit	10/3/80
Syva Co	Emit-st Phencyclidine Assay	Vial: 3ml, 80 vials/kit	1/7/81
Syva Co	Emit-st Serum Barbiturate Assay	Vial: 3ml, 80 vials/kit	2/16/81
Syva Co	Emit-st Serum Benzodiazepine Assay	Vial: 3ml, 80 vials/kit	2/16/81
Syva Co	Emit-st Serum Calibrator	Vial: 3ml	2/16/81
Syva Co	Emit-st Serum Controls	Vial: 3ml, 2 vials/kit	2/16/81
Syva Co	Emit-st Serum Phencyclidine Assay	Vial: 3ml, 80 vials/kit	2/16/81
Syva Co	Emit-st Urine Calibrator A	Vial: 1ml, 3 vials/kit	10/3/80
Syva Co	Emit-st Urine Cocaine Metabolite Assay	Vial: 3 ml, 80 Vials/Kit	3/16/82
Syva Co	Emit-st Urine Controls A	Vial: 1ml, 6 vials/kit	10/3/80
Syva Co	Emit-st Urine Methadone Assay	Vial: 3ml , 80 vials/kit	3/22/82
Syva Co	Emit-st Urine Methaqualone Assay	Kit: 80 Vials	4/27/82
Syva Co	Emit-st Urine Methaqualone Calibrator	Vial: 3ml	4/27/82
Syva Co	Emit-st Urine Methaqualone Controls	Vial: 3ml	4/27/82
Syva Co	IL test AED Calibrator 1	Vial: 5 ml	4/6/90
Syva Co	IL test AED Calibrator 2	Vial: 5ml	4/6/90
Syva Co	IL test AED Calibrator 3	Vial: 5ml	4/6/90
Syva Co	IL test AED Calibrator 4	Vial: 5ml	4/6/90
Syva Co	IL test AED Calibrator 5	Vial: 5ml	4/6/90
Syva Co	IL test Cannabinoid 100ng, 400ng calibrator	Vial: 5ml	4/6/90
Syva Co	IL test set A calibrator	Vial: 5ml	4/6/90
Syva Co	IL test set A control	Vial: 5ml	4/6/90
Syva Co	IL test set B calibrator	Vial: 5ml	4/6/90
Syva Co	IL test set B control	Vial: 5ml	4/6/90
Syva Co	Vista Thyroxine Uptake Reagent Cartridge	Cartridge: 4ml	1/22/93
Syva Co	Vista Triiodothyronine (T3) Reagent Cartridge	Cartridge: 2.02 ml	9/11/92
Tempil Division. Big Three Industries, Inc.	Tempilaq Striped Mylar	Plastic Sheet: 6 by 12 in. 50 sheets per envelope.	9/22/76
The Binding Site, Inc	I.F.E. Buffer	Plastic Bottle: 125ml	12/5/91
The Binding Site, Inc	Immunofixation Kit	Kit: 125ml Plastic Bottle	12/5/91
The Theta Corp	Allobarbital No.FP305	Vial: 2ml	4/10/73
The Theta Corp	Amobarbital No. FP313	Vial: 2ml	4/10/73
The Theta Corp	Amphetamine No. FP604	Vial: 2ml	4/10/73
The Theta Corp	Anileridine No. FP203	Vial: 2ml	4/10/73
The Theta Corp	Aprobarbital No. FP306	Vial: 2ml	4/10/73
The Theta Corp	Barbital No.FP314	Vial: 2ml	4/10/73
The Theta Corp	Benzoylecgonine FP-1001	Vial: 2 ml	1/24/87
The Theta Corp	Butabarbital No. FP315	Vial: 2ml	4/10/73
The Theta Corp	Butalbital No. FP307	Vial: 2ml	4/10/73
The Theta Corp	Chloral Betaine No. FP502	Vial: 2ml	4/10/73
The Theta Corp	Chloral Hydrate No. FP501	Vial: 2ml	4/10/73
The Theta Corp	Cocaine No. FP601	Vial: 2ml	4/10/73
The Theta Corp	Codeine No. FP102	Vial: 2ml	4/10/73
The Theta Corp	Cyclobarbital No. FP308	Vial: 2ml	4/10/73
The Theta Corp	Dihydrocodeine No. FP108	Vial: 2ml	4/10/73
The Theta Corp	Diphenoxylate No. FP205	Vial: 2ml	4/10/73
The Theta Corp	Ethchlorvynol No. FP508	Vial: 2ml	4/10/73
The Theta Corp	Ethylmorphine No. FP106	Vial: 2ml	4/10/73
The Theta Corp	FP207	Vial: 2ml	9/4/80
The Theta Corp	FP210	Vial: 2ml	5/15/84
The Theta Corp	FP214	Vial: 2ml	4/10/84
The Theta Corp	FP327	Vial: 2ml	4/10/84
The Theta Corp	FP405	Vial: 2ml	3/8/79
The Theta Corp	FP411	Vial: 2ml	5/15/84
The Theta Corp	FP412	Vial: 2ml	5/15/84
The Theta Corp	FP416	Vial: 2ml	5/15/84
The Theta Corp	FP512	Vial: 2ml	3/8/79

EXEMPT CHEMICAL PREPARATIONS—Continued

Supplier	Product name	Form	Date
The Theta Corp	FP513	Vial: 2ml	3/8/79
The Theta Corp	FP514	Vial: 2ml	5/15/84
The Theta Corp	FP515	Vial: 2ml	3/8/79
The Theta Corp	FP556	Vial: 2ml	4/10/84
The Theta Corp	FP601A	Vial: 2ml	5/15/84
The Theta Corp	FP607	Vial: 2ml	5/15/84
The Theta Corp	FP609	Vial: 2ml	5/15/84
The Theta Corp	Fentanyl No. FP211	Vial: 2ml	4/10/73
The Theta Corp	Glutethimide No. FP404	Vial: 2ml	4/10/73
The Theta Corp	Heptabarbital No. FP309	Vial: 2ml	4/10/73
The Theta Corp	Hexabarbital No. FP303	Vial: 2ml	4/10/73
The Theta Corp	Hydrocodone No. FP107	Vial: 2ml	4/10/73
The Theta Corp	Hydromorphone No. FP103	Vial: 2ml	4/10/73
The Theta Corp	Levorphanol No. FP208	Vial: 2ml	4/10/73
The Theta Corp	Marker Mixture No. FPM-104	Vial: 2ml	4/10/73
The Theta Corp	Marker Mixture No. FPM-201	Vial: 2ml	4/10/73
The Theta Corp	Meperidine No.FP201	Vial: 2ml	4/10/73
The Theta Corp	Mephobarbital No. FP301	Vial: 2ml	4/10/73
The Theta Corp	Meprobamate No. FP402	Vial: 2ml	4/10/73
The Theta Corp	Methadone No. FP206	Vial: 2ml	4/10/73
The Theta Corp	Methamphetamine No. FP603	Vial: 2ml	4/10/73
The Theta Corp	Metharbital No. FP302	Vial: 2ml	4/10/73
The Theta Corp	Methohexital No. FP304	Vial: 2ml	4/10/73
The Theta Corp	Methylphenidate No. FP605	Vial: 2ml	4/10/73
The Theta Corp	Monthly Urine Test No. FPM-103	Vial: 2ml	4/10/73
The Theta Corp	Morphine No. FP101	Vial: 2ml	4/10/73
The Theta Corp	Oxycodone No. FP109	Vial: 2ml	4/10/73
The Theta Corp	Oxymorphone No. FP104	Vial: 2ml	4/10/73
The Theta Corp	Paraldehyde No.FP506	Vial: 2ml	4/10/73
The Theta Corp	Pentobarbital No. FP318	Vial: 2ml	4/10/73
The Theta Corp	Phenazocine No. FP213	Vial: 2ml	4/10/73
The Theta Corp	Phenmetrazine No. FP606	Vial: 2ml	4/10/73
The Theta Corp	Phenobarbital No. FP320	Vial: 2ml	4/10/73
The Theta Corp	Piminodine No. FP202	Vial: 2ml	4/10/73
The Theta Corp	Probarbital No. FP319	Vial: 2ml	4/10/73
The Theta Corp	Secobarbital No. FP310	Vial: 2ml	4/10/73
The Theta Corp	Talbutal No. FP311	Vial: 2ml	4/10/73
The Theta Corp	Test Mixture SM No. 1	Vial: 2ml	6/19/74
The Theta Corp	Test Mixture SM No. 2	Vial: 2ml	6/19/74
The Theta Corp	Test Mixture SM No. 3	Vial: 2ml	6/19/74
The Theta Corp	Test Mixture SM No. 4	Vial: 2ml	6/19/74
The Theta Corp	Test Mixture SP No. 1	Vial: 2ml	6/19/74
The Theta Corp	Test Mixture SP No. 2	Vial: 2ml	6/19/74
The Theta Corp	Test Mixture SP No. 3	Vial: 2ml	6/19/74
The Theta Corp	Test Mixture SP No. 4	Vial: 2ml	6/19/74
The Theta Corp	Test Mixture TM No. 1	Vial: 2ml	6/19/74
The Theta Corp	Test Mixture TM No. 2	Vial: 2ml	6/19/74
The Theta Corp	Thiamylal No. FP322	Vial: 2ml	4/10/73
The Theta Corp	Thiopental No. FP321	Vial: 2ml	4/10/73
The Theta Corp	Vinbarbital No. FP312	Vial: 2ml	4/10/73
The Theta Corp	Weekly Urine Test (FDA) No. FPM-101	Vial: 2ml	4/10/73
The Theta Corp	Weekly Urine Test (States) No. FPM-102	Vial: 2ml	4/10/73
The Upjohn Company	DDHQ Spent Oxidant	Fiber Drum: 30 Gallons	12/19/94
Toxi-Lab, Inc	Proficiency Sample	Plastic bottle containing 40 ml	6/22/82
Toxi-Lab, Inc	Special Toxi-Discs	Plastic vial or bottle containing 50 Standard Discs.	3/30/77
Toxi-Lab, Inc	Supplemental Standard Toxi-Discs No. SD–4 Catalog No. 234	Plastic vial containing 50 Standard Discs.	6/15/88
Toxi-Lab, Inc	Supplemental Standard Toxi-Discs No. SD–5 Catalog No. 235	Plastic vial containing 50 Standard Discs.	6/15/88
Toxi-Lab, Inc	Supplemental Standard Toxi-Discs No. SD–6 Catalog No. 236	Plastic vial containing 50 Standard Discs.	6/15/88
Toxi-Lab, Inc	Toxi-Control	Plastic bottle containing 50 ml	3/30/77
Toxi-Lab, Inc	Toxi-Control THC	Plastic bottle containing 50 ml	10/5/83
Toxi-Lab, Inc	Toxi-Disc A Series	Plastic vial containing 50 Standard Discs.	5/6/75
Toxi-Lab, Inc	Toxi-Disc B Series	Plastic vial containing 50 Standard Discs.	5/6/75
Toxi-Lab, Inc	Toxi-Discs Library II, No 3 Catalog No. 131C	Plastic vial containing 50 Standard Discs.	6/15/88
Toxi-Lab, Inc	Toxi-Discs Library II, No. 1 Catalog No. 131A	Plastic vial containing 50 Standard Discs.	6/15/88

EXEMPT CHEMICAL PREPARATIONS—Continued

Supplier	Product name	Form	Date
Toxi-Lab, Inc	Toxi-Discs Library II, No. 10 Catalog No. 131K	Plastic vial containing 50 Standard Discs.	6/15/88
Toxi-Lab, Inc	Toxi-Discs Library II, No. 11, Catalog No. 131L	Plastic vial containing 50 Standard Discs.	6/15/88
Toxi-Lab, Inc	Toxi-Discs Library II, No. 12 Catalog No. 131M	Plastic vial containing 50 Standard Discs.	6/15/88
Toxi-Lab, Inc	Toxi-Discs Library II, No. 2 Catalog No. 131B	Plastic vial containing 50 Standard Discs.	6/15/88
Toxi-Lab, Inc	Toxi-Discs Library II, No. 5 Catalog No. 131E	Plastic vial containing 50 Standard Discs.	6/15/88
Toxi-Lab, Inc	Toxi-Discs Library II, No. 8 Catalog No. 131H	Plastic vial containing 50 Standard Discs.	6/15/88
Toxi-Lab, Inc	Toxi-Discs THC	Plastic vial containing 50 Standard Discs.	10/5/83
Toxi-Lab, Inc	Toxi-Grams	Glass jar containing 50 or 100 Chromatograms.	9/24/80
Toxi-Lab, Inc	Toxi-Lab Cannabinoid (THC) Screen	Kit: 50 tests	10/5/83
Tudor Laboratories, Inc	FPIA Phenobarbital Kit—Cat. No. 105	Kit: 100 tests	11/27/89
Tudor Laboratories, Inc	Phenobarbital Calibrator Kit Cat. No. 205	Kit: 6 vials	11/27/89
Tudor Laboratories, Inc	Phenobarbital Calibrators B, C, D, E, F	Vial: 4.0 ml	11/27/89
Universal Reagents, Inc	Drug Monitoring & Toxicology No. DM 90-5, DM-62	Bottle: 10ml	10/9/90
Utak Laboratories	Toxicology Control-High Range Anticonvulsants No. 71910	Bottle: 10ml	4/14/80
Utak Laboratories	Toxicology Control-High Range Barbiturates No. 71916	Bottle: 10ml	4/14/80
Utak Laboratories	Toxicology Control-High Range Hypnotic Plus Acetaminophem, No. 71918.	Bottle: 10ml	4/14/80
Utak Laboratories	Toxicology Control-High Range Hypnotic Plus Salicylate, No. 71920.	Bottle: 10ml	4/14/80
Utak Laboratories	Toxicology Control-Mid Range Anticonvulsants No. 71911	Bottle: 10ml	4/14/80
Utak Laboratories	Toxicology Control-Mid Range Barbiturates No. 71917	Bottle: 10ml	4/14/80
Utak Laboratories	Toxicology Control-Mid Range Hypnotic Plus Acetaminophem, No. 71919.	Bottle: 10ml	4/14/80
Utak Laboratories	Toxicology Control-Mid Range Hypnotic Plus Salicylate, No. 71921.	Bottle: 10ml	4/14/80
Utak Laboratories	Toxicology Serum Control Dried #88112	Bottle: 10ml	7/29/82
Utak Laboratories	Toxicology Serum Control Dried #88113	Bottle: 10ml	7/29/82
Utak Laboratories	Toxicology Serum Control Dried #88120	Bottle: 10ml	7/29/82
Utak Laboratories	Toxicology Serum Control-Dried Catalog Nos. 44610, 44612, 44632, 44635, 44636, 44637, 44642, 44645, 44646, 44647, 44658.	In Bottles	5/24/76
Utak Laboratories	Toxicology Urine Control Dried #88100	Bottle: 20ml	7/29/82
Utak Laboratories	Toxicology Urine Control Dried #88121	Bottle: 10ml	7/29/82
Utak Laboratories	Toxicology Urine Control-Dried Catalog Nos. 44650, 44651, 44652, 44653.	Bottle: 1 oz	5/24/76
Ventrex Laboratories, Inc	PTH Antiserum	Vial: 5ml	4/12/90
Ventrex Laboratories, Inc	PTH Assay Buffer	Vial: 10ml	4/12/90
Ventrex Laboratories, Inc	PTH Omega Radioimmunoassay Kit	Kit: 60 tests	4/12/90
Ventrex Laboratories, Inc	PTH Second Antibody	Vial: 10ml	4/12/90
Ventrex Laboratories, Inc	PTH Tracer Buffer	Vial: 5 ml	4/12/90
Wien Laboratories, Inc	3H Dihydrotestosterone Cat. No. D-1916	Vial: 5.5ml	2/21/91
Wien Laboratories, Inc	3H Epi-Testosterone Cat. No. T–1028	Vial: 5.5ml	2/21/91
Wien Laboratories, Inc	3H Testosterone Cat. No. T–3027	Vial: 5.5ml	2/21/91
Wien Laboratories, Inc	ANS Buffer pH 8.6 Catalog No. T–5144	Plastic Bottle: 100ml	5/14/75
Wien Laboratories, Inc	Buffer Reagent pH 8.6 Catalog No. T–5065	Bottle: 4oz	12/22/72
Wien Laboratories, Inc	Coated Charcoal Suspension No. T–5077	Bottle: 4oz	12/22/72
Wien Laboratories, Inc	Dihydrotestosterone Standard 1ng/ml Cat. No. D–1928	Vial: 5.5ml	2/21/91
Wien Laboratories, Inc	Epi-Testosterone Standard, 10ng/ml Cat. No. T–1016	Vial: 5.5ml	2/21/91
Wien Laboratories, Inc	Epi-Testosterone Test Set Cat. No. TS–1010	Kit: 2 Bottles	2/21/91
Wien Laboratories, Inc	Methamphetamine: HRP EIA Conjugate	Vial: 5ml, 10ml	6/25/90
Wien Laboratories, Inc	T3 Buffer Reagent Catalog No. T–5156	Plastic Vial: 20ml	9/13/78
Wien Laboratories, Inc	Testosterone Standard, 10ng/ml Cat. No. T–3039	Vial: 5.5ml	2/21/91
Wien Laboratories, Inc	Testosterone Test Set Cat. No. TS–333	Kit: 2 Bottles	2/21/91
Windsor Laboratories, Inc	Calibrators FPR Phenobarbital	Kit: 6 Vials	10/30/86
Windsor Laboratories, Inc	Phenobarbital Fluorescence Polarization Immunoassay Kit	Kit: 100 tests	11/20/86

Dated: March 18, 1996.

Gene R. Haislip,

Deputy Assistant Administrator, Office of Diversion Control, Drug Enforcement Administration.

[FR Doc. 96–7385 Filed 3-27-96; 8:45 am]

BILLING CODE 4410–09–P

---

21 CFR 1313

[DEA Number 145N]

Export of Chemicals From the United States to Colombia; Policy Statement

AGENCY: Drug Enforcement Administration (DEA), Justice.

ACTION: Policy statement.

SUMMARY: Notice is hereby given that regular customer status for Colombian customers is being revoked under Section 1018(c)(1) of the Controlled Substance Import Export Act (CSIE) (21 U.S.C. 971(c)(1)). Each U.S. exporter is being informed by letter that they must notify DEA at least 15 days in advance of shipment of certain chemicals listed in 21 CFR 1310.04, if the shipment is from the United States with an ultimate destination of Colombia. Moreover, in view of the danger that chemical shipments may be diverted into the illicit manufacture of cocaine, a heightened review process will be instituted for such exports and for transhipments. The exception under Title 21, Code of Federal Regulations (21 CFR), Section 1313.24, allowing exporters to notify DEA as late as the day of shipment for transactions between a ''regulated person'' and a ''regular customer'' will not apply to shipments of certain chemicals to Colombia until further notice.

EFFECTIVE DATE: March 28, 1996.

FOR FURTHER INFORMATION CONTACT: William Wolf, Chief, Chemical Operations Section, Office of Diversion Control, Drug Enforcement Administration, Washington, D.C. 20537, Telephone (202) 307–7204.

SUPPLEMENTARY INFORMATION: The following is a statement of policy by the Drug Enforcement Administration (DEA) under the Controlled Substances Act, as amended by the Chemical Diversion and Trafficking Act of 1988 (CDTA), regarding exports of certain listed chemicals from the United States to Colombia.

On March 1, 1996, the President of the United States, under the Annual Certification Procedures Act (22 U.S.C. Section 2291j), moved to decertify Colombia's status as a nation actively cooperating with the United States to stem the clandestine manufacture and trafficking of illegal drugs. This action was taken in response to overwhelming evidence of rampant drug-related corruption at the highest levels of the Colombian government. In direct contravention of efforts by Colombian law enforcement officials and the judicial sector to root out drug-related corruption, elements of the Colombian government have systematically undermined and publicly attacked these efforts while failing to support the efforts of Colombian law enforcement to strengthen the nation's institutions to combat the destructive effects of narcotics traffickers.

These problems have also adversely affected the ability of the Colombian Government to insure that listed chemicals imported from the U.S. and other sources are not diverted into the illicit manufacture of cocaine.

At a time when the Colombian government's commitment to combating narcotic trafficking has deteriorated, as evidenced by shifting the import permit approvals outside the existing infrastructure for chemical control, DEA data reveals a 57% increase between 1990 and 1995 in the sales to Colombia of List II solvents that are used in the clandestine manufacture of cocaine. These sales by U.S. chemical firms, which were based primarily upon Colombian authorization, are estimated by the Colombian Director of Customs to comprise 59% of the listed chemicals now imported into Colombia and, unfortunately, coincide with continued large scale illicit cocaine production within Colombia. DEA has concluded, therefore, that all shipments to Colombia of certain chemicals may be diverted to the clandestine manufacture of a controlled substance.

The CDTA, the Domestic Chemical Diversion Control Act (DCDCA) and the implementing regulations have established a system of recordkeeping and reporting requirements that provide DEA with a mechanism to track domestic and international movement of listed chemicals in order to prevent their being diverted for use in the clandestine manufacture of controlled substances.

Section 1018(a) of the CSIE (21 U.S.C. 971(a)), as amended by the CDTA, provides that ''each regulated person who imports or exports a listed chemical shall notify the Attorney General of the importation or exportation not later than 15 days before the transaction is to take place.'' In accordance with Section 1018(b) (21 U.S.C. 971(b)), this requirement is modified by 21 CFR 1313.24 where the transaction is between a ''regulated person'' and a ''regular customer.'' Under normal circumstances, exporters are allowed to ship listed chemicals to regular customers with notification as late as the day of shipment.

A person located in the United States who is a broker or trader for an international transaction of a listed chemical is subject to all of the notification, reporting, recordkeeping, and other requirements placed upon exporters of listed chemicals. No waiver of the 15-day advance notice is permitted under Section 1313.31 for importations and exportations for transhipment purposes of threshold quantities of listed chemicals.

Regardless of whether the shipment is a direct export or a transhipment, DEA has the obligation to examine the notification in order to determine if the shipment is legitimate and that the chemical will not be diverted to the illicit manufacture of controlled substances. Due to the distribution network within Colombian, where large quantities of the chemicals used in the clandestine manufacture of illegal controlled substances are redistributed by the importing customer, bestowing ''regular customer'' status on the importer is ineffective in assuring legitimate usage.

As underscored by the President's action to decertify Colombia as a cooperating nation due to widespread corruption, DEA is unable to determine the legitimacy of shipments of the specified chemicals or to rely on import permits and other documentation issued by the Colombian Government that the above chemicals are not being diverted for use in the clandestine manufacture of controlled substances. Although the Colombian National Police have been diligent and constructive in their efforts to monitor the legitimacy of chemicals imported into Colombia, its efforts have been handicapped by inadequate political and resource support. DEA has no confidence that those customers previously submitted as regular customers, nor those who would become regular customers in the future, as specified in 21 CFR 1313.24, are not diverting the above chemicals to the illicit drug traffic. Therefore, in the absence of a way to determine with any reasonable degree of certainty that chemical shipments will not be diverted, pursuant to Section 1018(c)(1) of the CSIE (21 U.S.C. 971(c)(1)), DEA will act to disqualify regular customer status for Colombian importers of MEK, MIBK, acetone, toluene, potassium permanganate, and ethyl ether. Accordingly, each U.S. exporter is being informed by letter that for all shipments of these chemicals to Colombia, the exporter must now file a Chemical

Export Declaration (DEA Form 486) at least 15 days in advance of the shipment date in accordance with 21 CFR 1313.21 for every shipment of a threshold amount of the above listed chemicals to Colombia. All subsequent shipments of any of the identified chemicals to the same customer will continue to require 15 day advance notice and evidence of a documented legitimate need.

Furthermore, because DEA has concluded that all shipments to Colombia of the above chemicals may be diverted to the clandestine manufacture of a controlled substance, pursuant to 21 CFR 1313.41, it is DEA's intent to suspend such exports and imports for transhipment in the absence of documented proof of ultimate legitimate use. Shipments of these chemicals will be closely monitored by DEA to determine whether the exporters have presented sufficiently detailed documentation for DEA to conclude that the ultimate users have the specific, legitimate need for the type and quantity of the chemical being purchased and, that the chemical will not be used for the clandestine production of controlled substances. Export declarations and Notices of Importation for Transhipment for the specified chemicals will be reviewed utilizing the following criteria:

A. Whether the U.S. exporter, broker, or foreign exporter for transhipment has shown that the end use for all of the chemical will be for a legitimate purpose;

B. If the importer is not the end user, whether all users or distributors through to the end users are identified to DEA with sufficient documentation to confirm the legitimacy of their chemical needs; and

C. Whether the quantity and type of chemical is consistent with the nature and size of each end user's business.

A person who knowingly or intentionally exports a listed chemical in violation of section 1018 shall be fined in accordance with Title 18, imprisoned not more than 10 years, or both (21 U.S.C. 960(d) (5) and (6)).

U.S. and foreign exporters, and brokers are cautioned to view every order of these or substitute chemicals from Colombia and other countries in the region with extreme caution. In view of the existing evidence that all shipments to Colombia of the above chemicals may be diverted to the clandestine manufacture of a controlled substance, firms should recognize that export declarations and Notices of Importation for Transhipment will be subjected to the heightened standard of review set forth herein with respect to the identity of the end users and the documented legitimacy of usage. Failure to meet this standard will result in the suspension of the shipment pursuant to 21 CFR 1313.41.

Dated: March 22, 1996.

Stephen H. Greene,

Deputy Administrator, Drug Enforcement Administration.

[FR Doc. 96–7546 Filed 3–27–96; 8:45 am]

BILLING CODE 4410–09–M

UNITED STATES INFORMATION AGENCY

22 CFR Part 514

Exchange Visitor Program

AGENCY: United States Information Agency.

ACTION: Statement of policy.

SUMMARY: Since August of 1990, the Agency has continued its oversight of Summer Travel/Work programs, notwithstanding suggestions that the Agency is in fact without statutory authority to conduct such programs as currently configured. The Agency hereby announces its acceptance, as statutorily sound, of four Summer Travel/Work programs. A two year period of additional review of a fifth program is also hereby announced and adopted.

EFFECTIVE DATE: This policy statement is effective March 28, 1996.

FOR FURTHER INFORMATION CONTACT: Stanley S. Colvin, Assistant General Counsel, United States Information Agency, 301 4th Street, S.W., Washington, D.C. 20547; Telephone, (202) 619–6829.

SUPPLEMENTARY INFORMATION: In February of 1990, the General Accounting Office (''GAO'') issued its report entitled ''Inappropriate Uses of Educational and Cultural Exchange Visas.'' This report specifically identified Summer Travel/Work programs designated by the Agency for the past twenty-five years as an example of programs operating outside of the statutory parameters set forth under the Mutual Educational and Cultural Exchange Act of 1961 (Fulbright-Hays Act.) As currently configured, Summer Travel/Work programs permit foreign university students to enter the United States during their summer months for the purpose of travel and the pursuit of employment opportunities wherever they may be found. Approximately 16,000 foreign university students to charges of inappropriate use of the Exchange Visitor Program and brought about, in March of 1993, the promulgation of new and comprehensive regulations governing exchange activities. These regulations, in turn, resulted in changes to the operations of flagship exchange programs and other programs of long-standing and venerable reputation. Underlying this policy and regulatory review was the Agency's identification of the core components of an exchange activity. These components—selection, screening, orientation, placement, monitoring, and the promotion of mutual understanding—define what an exchange is and whether one is actually occurring.

The use of these components in a review of the Summer Travel/Work programs demonstrates clearly why the Agency has determined that it lacks sufficient authority to continue the programs as currently configured. Today, five organizations conduct Summer Travel/Work programs pursuant to two substantially different program designs. Four of the five programs arrange all details of the program including prearranged employment and accommodations. The remaining program, accounting for approximately 12,000 of all participants, does not make advance arrangements for employment or accommodations. Participants in this program are left to their own devices in securing both employment and accommodation.

Given the design and operation of these four programs and their selection, screening, orientation, placement, and monitoring of program participants, the Agency is satisfied that statutory conformity is possible. Accordingly, the Agency has determined that these four Summer Travel/Work programs should be allowed to expand both their number of program participants and the countries from which they are selected. Program guidelines have been developed and the four programs currently selecting, screening, orienting, placing, and monitoring their program enter each year for this purpose.

The 1990 GAO report was the catalyst for what has become a five year debate regarding the public diplomacy value of Summer Travel/Work programs and the Agency's legal authority to continue them under the aegis of the Fulbright-Hays Act. The debate surrounding these programs occurs entirely along the fault lines that necessarily underlie the intersection of law and policy. The legal considerations of this debate are straightforward, while the policy considerations are less so.

Statutory Considerations

The Immigration and Nationality Act, as amended, sets forth at 8 U.S.C.

1101(a)(15)(J) an alien's statutory eligibility for entry into the United States on a J visa. The J visa was created, as a provision of the Fulbright-Hays Act, to facilitate educational and cultural exchange activities. Pursuant to the provisions of 1101(a)(15)(J), an exchange visitor is defined as:

(J) an alien having a residence in a foreign country which he has no intention of abandoning who is a bona fide student, scholar, trainee, teacher, professor, research assistant, specialist, or leader in a field of specialized knowledge or skill, or other person of similar description, who is coming temporarily to the United States as a participant in a program designated by the Director of the United States Information Agency, for the purpose of teaching, instructing or lecturing, studying, observing, conducting research, consulting, demonstrating special skills, or receiving training and who, if he is coming to the United States to participate in a program under which he will receive graduate medical education or training, also meets the requirements of section 212(j), and the alien spouse and minor children of any such alien if accompanying him or following to join him:

Given this statutory definition of an exchange participant, the GAO concluded that persons entering the United States to participate in Summer Travel/Work programs did not fall within the statutory parameters of the Fulbright-Hays Act and the Immigration and Nationality Act. Specifically, the GAO opined that the Summer Travel/Work programs do not require participants to engage in those activities set forth in both Acts.

In response to this GAO report, the Agency published a Statement of Policy and Notice in the Federal Register on August 13, 1990 (55 FR 32906.) This notice advised the public and those organizations facilitating Summer Travel/Work programs that, in light of the GAO report, a legal and policy review of the programs would be undertaken. This notice further advised that upon a favorable determination regarding the foreign policy value of these programs, the Agency would consider whether regulations could be drafted to conform the programs with existing law. The notice also advised that, in the alternative, the Agency might pursue legislation to specifically authorize the continuation of the programs.

As the debate regarding statutory authority began, the Agency received two well-reasoned and thorough legal memoranda suggesting the Agency did in fact possess adequate legal authority to facilitate Summer Travel/Work programs. These memoranda proved unpersuasive. Accordingly, the Agency remained unconvinced that it possessed sufficient statutory authority to facilitate Summer Travel/Work programs and so advised the Congress by letter dated June 10, 1991.

Additional support for this Agency determination was subsequently provided by a GAO Office of General Counsel letter opinion dated July 8, 1992. This letter opinion set forth a review of both the statutory language and legislative history of the Fulbright-Hays Act. The GAO affirmed its legal opinion set forth in the 1990 report but suggested that the Agency may be able to bring Summer Travel/Work programs into statutory compliance, stating:

Notwithstanding our conclusions, given the broad authority an agency has in promulgating regulations and implementing an activity conferred upon it by statute, Powell v. Schweiker, 688 F. 2d 1357, 1360–61 11th Cir. 1982), we think USIA could revise its regulations to establish trainee, summer student travel/work and international camp counselor programs that are consistent with the J-visa statute. We emphasize that any determination about the propriety of these programs must begin with the J-visa statute. If a program involves individuals whose status is comprehended by the categories set forth in the J-visa statute, and the statute authorizes the activity that such individuals will pursue, then the program would be consistent with the intent of the J-visa statute. These categories and activities intend an educational or cultural purpose.

Thus, the Agency laid to rest the question of whether it possessed sufficient statutory authority to continue Summer Travel/Work programs as currently configured. Having determined that it did in fact lack such authority, the Agency turned its attention to an examination of the policy and public diplomacy aspects underlying these activities.

Policy Considerations

Summer Travel/Work programs have been designated by the Agency for over twenty five years. When these programs began, a strict reciprocal element mandated that the number of United States students outbound from the United States approximate the number of foreign students inbound. Annual consultations with the program's sponsoring organizations were held and the number of participants for that year established. An additional requirement limited participation to foreign students lacking sufficient funds to enter the United States as tourists. Periodic reminders of this underlying policy were also transmitted to sponsoring organizations. The policy underlying these two requirements attempted to (i) ensure no adverse domestic labor market impact resulted from the activity; and (2) that only those persons otherwise financially unable to visit the United States would benefit from this opportunity.

These original policy objectives have been seriously eroded with the passage of time. Exchange programs facilitated under the auspices of the Fulbright-Hays Act must, as a matter of policy and law, have an underlying educational or cultural programmatic component which promotes the Act's raison d'etre of mutual understanding. Critics generally suggest that Summer Travel/Work programs do not possess an educational or cultural exchange component even when such terms are given their broadest of interpretations. Conversely, advocates of these programs suggest that ''experiential'' learning, whereby the participant gains insight into the American lifestyle and culture through travel and employment, does in fact fulfill the expected programmatic educational or cultural component.

The Agency's interpretation of what is an acceptable educational or cultural programmatic component is often quite broad. However, the Agency has determined that it is unable to adopt the concept of ''experiential'' learning as sufficient legal justification, in and of itself, for an exchange activity under the Fulbright-Hays Act. To do so, would suggest that any time an alien enters the country as a visitor for business or pleasure or as a temporary worker, an educational or cultural exchange occurs.

In light of this determination, and pursuant to the discussion set forth below, the Agency is willing, in general, to accept, ''experiential'' programs that otherwise incorporate those programmatic components common to all other exchange activities designated by the Agency.

The Components of Exchange

Since 1990, the Agency has engaged in an on-going review of the policy and public diplomacy considerations underpinning exchange activities. This review has proven useful in responding participants have agreed to abide by these guidelines in the absence of program specific regulations.

Because the remaining Summer Travel/Work sponsor does not operate its program in the manner that the Agency has determined would meet all threshold statutory requirements, the Agency is unable to allow this program to expand in size or scope. Thus, this sponsor will continue to be limited to the numerical program size at which it operated when statutory deficiencies were identified in February of 1990. In similar fashion, this sponsor will also be

limited to recruitment in only those countries in which it was operating Summer Travel/Work programs in 1990.

The Agency has agreed to permit the continued operation of this program under these terms notwithstanding its determination that such a program design continues to suffer certain statutory deficiencies. As agreed with the sponsor, the Agency will allow a two year period of continued study of this matter for the purpose of addressing the policy considerations arising from possible adverse domestic labor market impact due to the lack of preplacement. The Agency will seek the advice and counsel of the U.S. Department of Labor regarding labor market considerations and will continue this additional period of review until March 1, 1998.

List of Subjects in 22 CFR Part 514

Cultural exchange programs.

Dated: March 22, 1996.

Les Jin,

General Counsel.

Guidelines for Summer Work/travel Programs

In lieu of specific programmatic regulations governing the administration of Agency-designated Summer Travel/Work programs, the guidelines set forth below are hereby adopted by the Agency and shall be binding upon all newly designated programs and the existing Summer Travel/Work programs operated by the American Institute for Foreign Study, YMCA InterExchange, and Camp Counselors USA. These guidelines may be amended by the Agency at any time and shall remain in full force and effect until rescinded or Superseded by duly promulgated regulations.

(a) Introduction. These guidelines shall apply to the above described program sponsors and their administration of exchange visitor programs under which foreign university students are afforded the opportunity to travel and pursue employment in the United States for a four month period corresponding with their summer vacation.

(b) Participant Selection and Screening. In addition to satisfying the requirements set forth at § 514.10(a), sponsors shall adequately screen all program participants and at a minimum:

(1) Conduct an in person interview; and

(2) Ensure that the participant is a bona fide post-secondary school student is his or her home country; and

(3) Ensure that not more than ten percent of selected participants have previously participated in a summer travel/work program.

(c) Participant Orientation. Sponsors shall provide participants prior to their departure from the home country information regarding:

(1) The name and location of their employer; and

(2) Any contractual obligations related to their acceptance of paid employment in the United States.

(d) Participant Placements. Sponsors shall not facilitate the entry into the United States of any program participant for whom an employment position has not been arranged.

(e) Participant Compensation. Sponsors shall ensure that program participants receive pay and benefits commensurate with those offered to their American counterparts.

(f) Monitoring. Sponsors shall provide:

(1) All participants with a telephone number which allows 24 hour immediate contact with the sponsor; and

(2) Appropriate assistance to program participants on an as needed emergency basis.

(g) Placement report. In lieu of listing the name and address of the participant's pre-arranged employer on the form IAP–66 sponsors shall submit to the Agency a report of all participant placements. Such report shall reflect the participant's name, place of employment, and the number of times the participant has previously participated in any summer travel/work program. Such report shall be submitted semi-annually on January 30th and July 30th of each year and shall reflect placements made in the preceding six month period.

(h) Unauthorized activities. Placement as domestic employees in United States households is expressly prohibited.

[FR Doc. 96–7592 Filed 3–27–96; 8:45 am]

BILLING CODE 8230–01–M

DEPARTMENT OF THE TREASURY

Internal Revenue Service

26 CFR Part 1

[TD 8597]

RIN 1545–AT58

Consolidated Groups and Controlled Groups—Intercompany Transactions and Related Rules; Correction

AGENCY: Internal Revenue Service, Treasury.

ACTION: Correction to final regulations.

SUMMARY: This document contains corrections to final regulations [TD 8597] which were published in the Federal Register for Tuesday, July 18, 1995 (60 FR 36671). The final regulations amend the intercompany transaction system of the consolidated return regulations.

EFFECTIVE DATE: July 18, 1995.

FOR FURTHER INFORMATION CONTACT: Roy Hirschhorn of the Office of Assistant Chief Counsel (Corporate), (202) 622–7770 (not a toll-free number).

SUPPLEMENTARY INFORMATION:

Background

The final regulations that are the subject of these corrections are under sections 1502 and 267 of the Internal Revenue Code.

Need for Correction

As published, TD 8597 contains errors that are in need of correction.

Correction of Publication

Accordingly, the publication of the final regulations which are the subject of FR Doc. 95–16973, is corrected as follows:

On page 36679, under amendatory instruction ''Par. 2.'', the first column in the table is corrected by removing the reference to ''1.263A–1T(b)(2)(vi)(B)'' and in the seven entries for ''1.263A-1T'' correct the number ''1.263A–1T'' to read ''1.263A–7T''.

Cynthia E. Grigsby,

Chief, Regulations Unit, Assistant Chief Counsel (Corporate).

[FR Doc. 96–7388 Filed 3–27–96; 8:45 am]

BILLING CODE 4830–01–U

26 CFR Part 301

[TD 8595]

RIN 1545–AI24

Payment of Internal Revenue Tax by Check or Money Order and Liability of Financial Institutions for Unpaid Taxes; Correction

AGENCY: Internal Revenue Service, Treasury.

ACTION: Correction to final regulations.

SUMMARY: This document contains a correction to final regulations [TD 8595] which were published in the Federal Register for Friday, April 28, 1995 (60 FR 20899). The final regulations relate to payments with respect to internal revenue taxes and internal revenue stamps by check or money order.

EFFECTIVE DATE: April 28, 1995.

FOR FURTHER INFORMATION CONTACT: Robert A. Walker, (202) 622–3640 (not a toll-free number).

SUPPLEMENTARY INFORMATION:

Background

The final regulations that are the subject of this correction are under section 6311 of the Internal Revenue Code.

Need for Correction

As published, TD 8595 contains an error that is in need of clarification.

Correction of Publication

Accordingly, the publication of final regulations which are the subject of FR Doc. 95–10410, is corrected as follows:

On page 20899, column 3, in amendatory instruction ''Par. 2.'', line 8, the amendatory language ''5. Adding paragraphs (d) and (e).'' is corrected to read ''5. Adding paragraph (d).''.

Cynthia E. Grigsby,

Chief, Regulations Unit, Assistant Chief Counsel (Corporate).

[FR Doc. 96–7389 Filed 3–27–96; 8:45 am]

BILLING CODE 4830–01–U

DEPARTMENT OF JUSTICE

Parole Commission

28 CFR Part 2

Paroling, Recommitting, and Supervising Federal Prisoners: Original Jurisdiction Cases

AGENCY: Parole Commission, Justice.

ACTION: Final rule.

SUMMARY: The U.S. Parole Commission is amending the voting quorum required for initial parole decisions under 28 CFR 2.17. In addition, the appeal from such decisions that is available to prisoners under 28 CFR 2.27 is replaced by a petition for reconsideration. These are the procedures for deciding original jurisdiction cases, which involve high profile and extremely serious offenders. The Commission has determined that both initial decisions and petitions for reconsideration in these cases are appropriately decided by a majority vote of the Commission. These changes are necessary in view of the fact that the Commission is downsizing, and only four Commissioners are currently holding office.

EFFECTIVE DATE: April 1, 1996.

FOR FURTHER INFORMATION CONTACT: Pamela A. Posch, Office of General Counsel, 5550 Friendship Blvd., Chevy Chase, Maryland 20815, Telephone (301) 492–5959.

SUPPLEMENTARY INFORMATION: This action changes the quorum of Commissioner votes required to decide on original jurisdiction cases, in keeping with the reduction in the number of U.S. Parole Commissioners from six to four that will become effective April 1, 1996. The early effective date shown above has been ordered by the Commission pursuant to 5 U.S.C. 553(d)(3), and is necessary to permit the Commission to continue making its decisions within statutory deadlines notwithstanding the reduction in the number of Commissioners holding office. This is a procedural change only, and will not implicate the merits of any prisoner's case for parole or affect the way in which hearings are conducted. Hence, notice and public comment is not required. See 5 U.S.C. 553(b)(A). The guidelines at 28 CFR 2.20 will continue to govern the Commission's decisions to grant, deny, and revoke parole.

Implementation

This procedural rule change will apply to all original jurisdiction cases decided under 28 CFR 2.17 or 28 CFR 2.27, after the effective date shown above.

Executive Order 12866 and Regulatory Flexibility Statement

The U.S. Parole Commission has determined that this rule is not a significant regulatory action for the purposes of Executive Order 12866, and the rule has, accordingly, not been reviewed by the Office of Management and Budget. The rule will not have a significant economic impact upon a substantial number of small entities, within the meaning of the Regulatory Flexibility Act, 5 U.S.C. 605(b).

List of Subjects in 28 CFR Part 2

Administrative practice and procedure, probation and parole, prisoners.

The Final Rule

Accordingly, the U.S. Parole Commission makes the following changes to 28 CFR Part 2:

PART 2—[AMENDED]

(1) The authority citation for 28 CFR Part 2 continues to read as follows:

Authority: 18 U.S.C. 4203(a)(1) and 4204(a)(6).

§ 2.17 [Amended]

(2) 28 CFR Part 2, § 2.17(a) is amended by substituting the words ''the concurrence of three votes (or a majority vote of Commissioners holding office if such majority is less than three Commissioners)'' for the words ''the concurrence of three votes''.

(3) 28 CFR Part 2, § 2.17(c)(2) is amended by substituting the words ''a petition for reconsideration'' for the words ''an appeal''.

(4) 28 CFR Part 2, § 2.27 is revised to read as follows:

§ 2.27 Petition for reconsideration of original jurisdiction decisions.

(a) A petition for reconsideration may be filed with the Commission in cases decided under the procedure specified in § 2.17 within thirty days of the date of such decision. A form is provided for this purpose. A petition for reconsideration will be reviewed at the next regularly scheduled meeting of the Commission provided the petition is received thirty days in advance of such meeting. Petitions received by the Commission less than thirty days in advance of a regularly scheduled meeting will be reviewed at the next regularly scheduled meeting. The concurrence of three Commissioners (or a majority of Commissioners holding office if such majority is less than three Commissioners) shall be required to render a decision on a petition for reconsideration. In case the required concurrence is not reached, the previous decision shall stand. A decision under this rule shall be final.

(b) Attorneys, relatives, and other interested parties who wish to submit written information concerning a petition for reconsideration should send such information to the National Appeals Board, United States Parole Commission, 5550 Friendship Boulevard, Chevy Chase, Maryland 20815. Petitions and all supporting material are to be submitted thirty days in advance of the meeting at which such petitions will be considered.

(c) If no petition for reconsideration is filed within 30 days of the entry of a decision under § 2.17, that decision shall stand as the final decision of the Commission.

Dated: March 15, 1996.

Edward F. Reilly, Jr.,

Chairman, Parole Commission.

[FR Doc. 96–7527 Filed 3–27–96; 8:45 am]

BILLING CODE 4410–01–P

28 CFR Part 50

[AG ORDER NO. 2013–96]

RIN 1105–AA40

Removal of Procedures for Receipt and Consideration of Written Comments Submitted Under Subsection 2(b) of the Antitrust Procedures and Penalties Act

AGENCY: Department of Justice.

ACTION: Final rule.

SUMMARY: This rule removes procedures for receipt and consideration of written comments submitted under subsection 2(b) of the Antitrust Procedures and Penalties Act from the Code of Federal Regulations. The regulation is unnecessary, and its removal will help to streamline the Code of Federal Regulations.

EFFECTIVE DATE: This final rule is effective March 28, 1996.

FOR FURTHER INFORMATION CONTACT: Howard Blumenthal, Assistant Chief, Legal Policy Section, Antitrust Division, Room 3121 Main Justice Building, 10th & Pennsylvania Avenue NW., Washington, DC 20530; telephone (202) 514–2513.

SUPPLEMENTARY INFORMATION: 28 CFR 50.13 was promulgated pursuant to section 2 of the Antitrust Procedures and Penalties Act (''Tunney Act'' or ''Act''), Pub. L. No. 93–528 (codified at 15 U.S.C. 16(b)–(h), as amended). The Tunney Act requires that the Department of Justice (''Department'') file proposed consent judgments in civil cases brought under the antitrust laws with the district court before which such cases are pending for a judicial determination that entry of such judgments would be in the public interest. At least 60 days prior to the effective date of any such judgment, the Department must publish in the Federal Register the proposed judgment and a competitive impact statement (''CIS'') setting forth certain additional information including the background of the violation, an explanation of the proposed consent judgment, and an evaluation of alternatives to the proposed judgment actually considered by the United States. Summaries of the judgment and CIS must also be published in several appropriate newspapers. Both the Federal Register and newspaper notices must solicit public comments concerning the proposed consent judgment. The Department must supply the court with, and publish in the Federal Register, copies of any comments received and the response of the Department of such comments.

The Act requires the Attorney General or his designee to establish procedures to carry out the Act's provisions concerning the receipt and consideration of comments. 15 U.S.C. 16(d). In response, the Department promulgated 28 CFR 50.13, which provides that comments should be directed to the chief of the litigating section of the Antitrust Division (''Division'') to which the case is assigned, and sets out certain general procedures for handling such comments once they have been received by the Division.

This regulation is not necessary, nor is it particularly helpful. First, while the regulation provides generally that comments should be sent to the chief of the section of the Antitrust Division handling the case, the name and address of the Division attorney to whom comments should be sent concerning particular proposed consent judgments is always set out in the Federal Register and newspaper notices requesting such comments. Second, more complete Division procedures for handling Tunney Act comments once they have been received than are set out in 28 CFR 50.13 can be established by the Department without the need for a regulation, and these procedures can then be adjusted without the need formally to revise a regulation.

Therefore, because 28 CFR 50.13 is unnecessary and is not required to be promulgated by the Tunney Act, the Department is removing this provision from the Code of Federal Regulations.

Administrative Procedure Act, 5 U.S.C. 553

Because this regulation imposes no new requirements or restrictions, the Department of Justice finds good cause for exempting it from the provisions of the Administrative Procedure Act (5 U.S.C. 553) requiring notice of proposed rulemaking, the opportunity for public comment, and delay in effective date.

Regulatory Flexibility Act

The Attorney General, in accordance with the Regulatory Flexibility Act (5 U.S.C. 605(b)), has reviewed this regulation and by approving it certifies that this regulation will not have a significant economic impact on a substantial number of small entities.

Executive Order 12612

This regulation will not have substantial direct effects on the states, on the relationship between the national government and the states, or on the distribution of power and responsibilities among the various levels of government. Therefore, in accordance with E.O. 12612, it is determined that this rule does not have sufficient federalism implications to warrant the preparation of a Federalism Assessment.

Executive Order 12866

This regulation has been drafted and reviewed in accordance with E.O. 12866, § 1(b), Principles of Regulation. The Department of Justice has determined that this rule is not a ''significant regulatory action'' under E.O. 12866, § 3(f), and accordingly this rule has not been reviewed by the Office of Management and Budget.

List of Subjects in 28 CFR Part 50

Administrative practice and procedure, Antitrust.

Accordingly, for the reasons set forth in the preamble, part 50 of chapter I of title 28 of the Code of Federal Regulations is amended as follows:

PART 50—STATEMENTS OF POLICY

1. The authority citation for part 50 is revised to read as follows:

Authority: 5 U.S.C. 301, 552, 552a; 21 U.S.C. 881(f)(2); 28 U.S.C. 508, 509, 510, 516, 517, 518, 519; E.O. 12250, 45 FR 72995, 3 CFR, 1980 Comp., p. 298.

§ 50.13 [Removed]

2. Section 50.13 is removed.

Dated: March 19, 1996.

Janet Reno,

Attorney General.

[FR Doc. 96–7364 Filed 3–27–96; 8:45 am]

BILLING CODE 4410–01–M

NATIONAL LABOR RELATIONS BOARD

29 CFR Part 102

Procedural Rules

AGENCY: National Labor Relations Board.

ACTION: Final Rule.

SUMMARY: The National Labor Relations Board is revising its rules that govern charges for responding to requests for information made pursuant to the Freedom of Information Act, 5 U.S.C. 552 (''FOIA''). The revisions are being adopted in order to bring these charges into line with the current costs to the Agency for processing such requests. The intended effect of the revisions is to permit the Agency to charge requesters rates that reflect the actual current costs for processing FOIA requests and for duplicating responsive documents.

EFFECTIVE DATE: April 29, 1996.

FOR FURTHER INFORMATION CONTACT: John J. Toner, Executive Secretary, 1099 14th Street, N.W. Room 11602, Washington, D.C. 20570–0001, Telephone: (202) 273–1934.

SUPPLEMENTARY INFORMATION: Section 102.117(d)(2)(i) of the National Labor Relations Board's Rules and Regulations, 29 CFR 102.117(d)(2)(i), sets forth the rates to be charged to persons requesting information from the

Agency pursuant to the Freedom of Information Act, 5 U.S.C. 552 (''FOIA''). These rates were last revised more than seven years ago, since which time our actual costs have increased.

Section 102.117(d)(2)(i) is being revised to set forth new rates which are based on the following calculations:

The typical clerical employee who works on the processing of a FOIA request is a GS–6, step 3. The present rate for that grade and step is $10.70 per hour. Adding the cost to the Agency for benefits (budgeted at 17.5%) brings the total rate to $12.50 per hour, or $3.10 per quarter-hour.

The typical professional employee who works on the processing of a FOIA request is a GS–14, step 5. The present rate for that grade and step is $31.50 per hour. Adding the cost to the Agency for benefits (budgeted at 17.5%) brings the total rate to $37.00 per hour, or $9.25 per quarter-hour.

The current cost of reproducing documents is $0.12 per page, up from $0.10 per page the last time the regulations were revised.

All other direct costs for responding to a FOIA request are to be billed at their actual cost to the Agency, as presently set forth in subsection 102.117(d)(2)(i)(D). That subsection is being revised, however, to explicitly provide that such actual costs shall include, where applicable, the cost of conducting computer searches for information and for providing information in electronic format.

Accordingly, subsection (d)(2)(i) of § 102.117 is being revised to reflect the foregoing changes in the costs for processing a FOIA request.

On a related subject, we have revised downwards our estimate of the cost of processing a check in payment of a FOIA fee from $11.00 to $5.00. Consequently, subsection (d)(iii)(A) of § 102.117 is being revised to provide that fees shall not be imposed on a requester when the total charges are less than $5.00.

In all other respects, 102.117 remains unchanged.

Pursuant to section 605(b) of the Regulatory Flexibility Act (5 U.S.C. 601 et seq.), the NLRB certifies that this rule will not have a significant impact on a substantial number of small businesses.

List of Subjects in 29 CFR Part 102

Administrative practice and procedure, Labor management relations.

Accordingly, 29 CFR part 102 is amended as follows:

PART 102—[AMENDED]

1. The authority citation for 29 CFR part 102 continues to read as follows:

Authority: Section 6, National Labor Relations Act, as amended (29 U.S.C. 151, 156). Section 102.117(c) also issued under section 552(a)(4)(A) of the Freedom of Information Act, as amended (5 U.S.C. 552(a)(4)(A)). Sections 102.143 through 102.155 also issued under section 504(c)(1) of the Equal Access to Justice Act, as amended (5 U.S.C. 504(c)(1)).

2. Section 102.117(d)(2)(i) and (d)(2)(iii)(A) are revised to read as follows:

§ 102.117 Board materials and formal documents available for public inspection and copying; requests for described records; time limit for response; appeal from denial of request; fees for document search, duplication, and review; files and records not subject to inspection.

* * * * *

(d) * * *

(2) Persons requesting records from this Agency shall be subject to a charge of fees for the full allowable direct costs of document search, review, and duplicating, as appropriate, in accordance with the following schedules, procedures, and conditions:

(i) Schedule of charges:

(A) For each one-quarter hour or portion thereof of clerical time—$3.10

(B) For each one-quarter hour or portion thereof of professional time—$9.25

(C) For each sheet of duplication (not to exceed 8½ by 14 inches) of requested records—$0.12

(D) All other direct costs of preparing a response to a request shall be charged to the requester in the same amount as incurred by the Agency. Such costs shall include, but not be limited to: certifying that records are true copies; sending records to requesters or receiving records from the Federal records storage centers by special methods such as express mail; and, where applicable, the cost of conducting computer searches for information and for providing information in electronic format.

* * * * *

(iii)(A) In no event shall fees be imposed on any requester when the total charges are less than $5.00, which is the Agency's cost of collecting and processing the fee itself.

* * * * *

Dated, Washington, DC, March 21, 1996.

By Direction of the Board.

John J. Toner,

Executive Secretary, National Labor Relations Board.

[FR Doc. 96–7410 Filed 3–27–96; 8:45 am]

BILLING CODE 7545–01–P

POSTAL SERVICE

39 CFR Part 20

Implementation of International Package Consignment Service

AGENCY: Postal Service.

ACTION: Interim rule with request for comments.

SUMMARY: International Package Consignment Service (IPCS) is an international mail service designed for companies sending merchandise to other countries. The service was previously available only to Japan. Canada and the United Kingdom (U.K.) are now being added as additional destination countries. The countries that are included in the United Kingdom are England, Scotland, Wales, Northern Ireland, Isle of Man, and Channel Islands. To use IPCS, a customer is required to mail at least 25,000 packages a year to Canada, or at least 10,000 packages a year to the U.K., and agree to link its information systems with the Postal Service's so that the Postal Service can extract certain information about the contents of the customer's packages for customs clearance and other purposes. Initially, two levels of service to Canada and three levels of service to the U.K. will be offered to customers. Interim regulations have been developed and are set forth below for comment and suggested revision prior to adoption in final form.

DATES: The interim regulations take effect March 28, 1996. Comments must be received on or before May 31, 1996.

ADDRESSES: Written comments should be mailed or delivered to International Package Consignment Service, U.S. Postal Service, 475 L'Enfant Plaza SW., Room EB4400, Washington, DC 20260–6500. Copies of all written comments will be available for public inspection and photocopying at the above address between 9 a.m. and 4 p.m., Monday through Friday, after May 31, 1996.

FOR FURTHER INFORMATION CONTACT:

Mike Opiela (Canada) at the above address. Telephone: (202) 268–3860.

Tim Gribben (United Kingdom) at the above address. Telephone: (202) 268–3035.

SUPPLEMENTARY INFORMATION:

I. Introduction

One of the most important goals of the Postal Service's international mission is the development of services that enhance the ability of U.S. companies to do business in other countries. This responsibility was delineated in 39 U.S.C. 403(b)(2) which makes it the

obligation of the Postal Service ''to provide types of mail service to meet the needs of different categories of mail and mail users.'' IPCS is designed to more closely meet the needs of customers who send merchandise packages from the United States to multiple international addressees by simplifying the process companies use to prepare their packages for mailing and by reducing the costs those companies incur in mailing merchandise to other countries.

IPCS benefits all users of the Postal Service because revenues collected contribute to fixed costs, thereby decreasing the total revenue that the Postal Service needs to recover from other services. At the same time, IPCS makes it easier and more economical for customers in the United States to export their products to international markets.

In late 1994, implementation of IPCS to Japan (59 FR 65961 December 22, 1994), the Postal Service announced that, when feasible, it would expand the service to other destination countries based on customer requests. The Postal Service hereby expands IPCS by adding Canada and the United Kingdom as destination countries for qualifying customers.

II. IPCS to Canada and the United Kingdom

A. Qualifying Criteria

A customer who wants to use IPCS to Canada or to the U.K. will be required to enter into a service agreement with the Postal Service providing for the following. First, the customer must commit to mail at least 25,000 packages a year to Canada, or 10,000 packages a year to the U.K. Second, the customer must designate the Postal Service as its carrier of choice to Canada or the U.K. Third, the customer must agree to link its information systems with the Postal Service's so that the Postal Service and the customer can exchange data transmissions concerning the customer's packages, and the Postal Service can extract, on an as-needed basis, certain information about the package by scanning the customer-provided barcode on each package.

In general, the information that must be made available to the Postal Service includes: the order number; the package identification number; the buyer's name and address; the recipient's name and address; the total weight of the package; the total value of the package contents; the number of items in the package; and, for each item in the package, its SKU number, its value, and its country of origin. In practice, this requirement means that the customer will have to begin the necessary systems work by the time it begins using IPCS, and then will have to assist the Postal Service in completing and maintaining the information systems linkages. The Postal Service will use the extracted information to prepare the necessary customs forms and package labels, to accept the customer's mail and verify postage payment automatically, and to provide user-friendly tracking and tracing.

In addition to these required commitments, which must appear in all IPCS service agreements, arrangements between the Postal Service and the customer that are technical in nature also may appear in the IPCS service agreement. For instance, the service agreement may describe the electronic data interface (EDI) or proprietary file format that will be used to transmit data between the customer and the Postal Service, as well as the frequency and schedule of transmissions. Similarly, the service agreement may describe the formats and frequencies for any exception and performance reports that the Postal Service will provide to the customer.

B. Processing and Acceptance

Because of efficiencies created by the Postal Service's ability to process all IPCS mail to Canada or the U.K. at a facility designed for that purpose, as well as general operational and managerial considerations, the Postal Service has determined that, in general, all IPCS mail to Canada or the U.K. should be processed at, and dispatched from, a dedicated IPCS facility.

If the plant at which the customer's ICPS packages originate is located within 500 miles of an IPCS Processing Facility, the Postal Service will verify and accept the packages at the customer's plant and transport them to the processing facility according to a schedule agreed upon by the Postal Service and the customer.

If the customer's plant is located more than 500 miles from the processing facility, two options are available. In Option One, the customer must present the packages to the Postal Service for verification at the customer's plant and transport them as a drop shipment to an IPCS processing facility according to a schedule agreed upon by the Postal Service and the customer. Option Two allows customers to avoid transporting the packages to an IPCS Processing Facility by performing some of the package processing that the Postal Service would otherwise perform. With this option, the Postal Service will provide one or more specially-designed computer workstations to be installed at the customer's plant. The computer workstation(s) and USPS-developed software will be integrated with the customer's order processing data system and will be operated by the customer's employees. As individual orders are processed for shipment, this workstation will prepare and generate all required customs declarations and international mail dispatch tags and forms. Since the workstation(s) is (are) integrated into the process, and may even replace other customer functions, no increase is anticipated in order processing and mail preparation time. When the mail is ready for dispatch, it will be verified and accepted on site by USPS personnel and transported by the Postal Service to a designated Air Exchange Office or directly to an entry point for forwarding and delivery according to a schedule agreed upon by the Postal Service and the customer. Under Option Two, the customer saves the cost of transporting the packages to an IPCS Processing Facility, and the Postal Service saves the cost of processing and sorting individual packages.

C. Customs Forms

Normally, all necessary Canadian and U.K. customs forms will be automatically generated by the Postal Service computer workstations. Packages mailed to Canada or the U.K. through an IPCS facility will not be required to bear customs forms when they are tendered to the Postal Service. The Postal Service will verify, accept, and transport these packages to a designated IPCS processing facility. After scanning the customer-printed barcode on each package and correlating it with the package-specific information transmitted by the customer, the Postal Service will print the necessary customs forms and then affix them to the customer's packages as part of the processing operation at the IPCS Processing Facility. However, during the interim period in which the Postal Service and the customer are working together to establish the information systems linkages to enable the Postal Service to accomplish this, customers may be required to prepare the necessary customs forms on their own and affix the forms to the packages before tendering them to the Postal Service. In those cases where the computer workstations are located at the customer's plant and operated by customer employees, the USPS computer workstations will print the customs forms, and the customer will be required to affix these forms to the appropriate packages as instructed by

the Postal Service prior to verification and acceptance of the mail.

D. Customs Clearance

The Postal Service has developed the Customs Pre-Advisory System (CPAS) as part of IPCS processing. This electronic system collects package-specific data to satisfy customs requirements as packages are processed using the USPS computer workstations located at either an IPCS facility or the customer's plant. The system electronically advises the USPS delivery agent and customs of the contents of each package mailed. Since this advisory information arrives before the mail, CPAS facilitates and simplifies customs clearance. Electronic pre-notification of the package contents and automatic preparation of required customs declarations assures the fastest clearance through Canadian or U.K. customs and reduces costs for the customer and the Postal Service. To use CPAS, recipients of merchandise must designate the Postal Service and its customs broker as their agents for customs clearance.

E. Delivery Options

(1) Canada

The Postal Service will initially offer two delivery options to Canada. The two options initially available will be Air Courier Service and Ground Courier Service. The weight limit for packages under both options will be 66 pounds, and both options will provide tracking and tracing.

Air Courier Service will be the fastest option. The Postal Service will transport Air Courier Service packages from the customer's plant or from the designated IPCS processing facility to Canada overnight where they will receive expeditious customs clearance and be released to the delivery agent. From there, the packages will receive courier service throughout Canada and be delivered to major population centers overnight. Normal delivery times will be two to three days from dispatch from the customer's plant to final delivery. Insurance up to $500 is included at no additional cost.

Ground Courier Service will offer overnight transportation to Canada and ground transportation to final destination in Canada. Ground Courier Service will receive the same expeditious customs clearance as Air Courier Service and normal delivery times for 95 percent of all Canadian addresses will be three to six days after dispatch from the customer's plant, depending on the location of final destination. (For addresses in the Maritimes and extreme northern territories where distance and poor roads affect transportation, delivery times could be as long as eight days.) Insurance will be available at an additional cost.

The Postal Service intends to develop and test a third delivery option for possible implementation at a later date. This third option, if successfully tested and implemented, will offer reduced rates, without tracking and tracing, but with proof of delivery provided. The Postal Service requests comments from customers regarding the need for the third option.

(2) United Kingdom

The Postal Service will offer three levels of service to the U.K. Premium, Standard, and Economy. The weight limit for all three delivery options is 66 pounds, the maximum length is 60 inches, and the maximum length and girth combined is 108 inches.

Premium Service will be the fastest option and will provide tracking and tracing and insurance up to $500 at no additional cost. The Postal Service will transport Premium packages to the U.K. by air. Once a package is dispatched from the customer's facility, it should clear customs and be delivered in the U.K. by close of business on the third working day.

Standard Service will be the next fastest delivery option and will provide tracking and tracing and insurance up to $500 at no additional cost. The Postal Service will transport Standard packages to the U.K. by air. Once a package is dispatched from the customer's facility, it should clear customs and be delivered in the U.K. by close of business on the fourth working day.

Economy Service will be the slowest delivery option and will provide tracking and tracing to the point of entry into the U.K's. domestic mail stream. Insurance will be available at an additional cost. The Postal Service will transport Economy packages to the U.K. by air. Once a package is dispatched from the customer's facility, it should clear customs and be delivered in the U.K. by close of business on the fifth or sixth working day.

F. Rates

(1) Canada

The base rates for the two delivery options currently available for Canada are set forth below. These rates may be reduced by one or more of the three annual discounts, depending on how many packages the customer mails to Canada through IPCS in a twelve month period.

For each delivery option, the Postal Service will charge the base rates, in 1-pound increments, for the first 100,000 packages mailed by the customer during a 12-month period. Once the customer has mailed 100,000 packages, postage for the customer's next 400,000 packages will be discounted by 3 percent from the base rates. Packages mailed through either of the two delivery options will count toward the customer meeting the 100,000 package threshold.

Once the customer has mailed 500,000 packages during a 12-month period, postage for the customer's next 500,000 packages will be discounted at 4 percent from the prior tier discounted schedule. Finally, a third level of Discount at 5 percent will apply for all packages mailed in excess of 1 million during the 12-month period. Again, packages mailed through either of the two delivery options will count toward the customer's meeting the 500,000 and 1,000,000 package thresholds.

INTERNATIONAL PACKAGE CONSIGNMENT SERVICE TO CANADA

Pounds	Base rates < 100k		Volume discounts					
			101k–500k 3.00%		501k–1m 4.00%		>1m 5.00%	
	Air	Ground	Air	Ground	Air	Ground	Air	Ground
1	10.15	8.55	9.85	8.29	9.45	7.96	8.98	7.56
2	11.09	9.37	10.76	9.09	10.33	8.72	9.81	8.29
3	12.74	10.92	12.36	10.60	11.86	10.17	11.27	9.66
4	14.38	11.93	13.95	11.57	13.39	11.10	12.73	10.55
5	16.03	12.95	15.55	12.56	14.93	12.06	14.18	11.46

INTERNATIONAL PACKAGE CONSIGNMENT SERVICE TO CANADA—Continued

Pounds	Base rates < 100k		Volume discounts					
			101k–500k 3.00%		501k–1m 4.00%		>1m 5.00%	
	Air	Ground	Air	Ground	Air	Ground	Air	Ground
6	17.55	13.98	17.03	13.56	16.35	13.02	15.53	12.37
7	19.19	14.93	18.61	14.48	17.87	13.90	16.98	13.20
8	20.83	15.85	20.20	15.38	19.39	14.76	18.42	14.03
9	22.46	16.80	21.79	16.29	20.92	15.64	19.87	14.86
10	24.10	17.72	23.37	17.19	22.44	16.51	21.32	15.68
11	25.55	18.55	24.78	17.99	23.79	17.27	22.60	16.41
12	27.17	19.49	26.36	18.91	25.30	18.15	24.04	17.25
13	28.81	20.45	27.95	19.84	26.83	19.05	25.49	18.09
14	30.44	21.40	29.52	20.76	28.34	19.93	26.92	18.93
15	32.06	22.36	31.10	21.69	29.85	20.82	28.36	19.78
16	33.68	23.86	32.67	23.14	31.37	22.21	29.80	21.10
17	35.32	24.84	34.26	24.09	32.89	23.13	31.25	21.97
18	36.95	25.81	35.84	25.03	34.40	24.03	32.68	22.83
19	38.57	26.99	37.41	26.18	35.92	25.14	34.12	23.88
20	40.19	27.97	38.99	27.13	37.43	26.05	35.56	24.74
21	41.53	28.74	40.29	27.88	38.68	26.76	36.74	25.43
22	43.15	29.71	41.85	28.82	40.18	27.67	38.17	26.28
23	44.76	30.69	43.42	29.77	41.68	28.58	39.59	27.15
24	46.37	31.66	44.98	30.71	43.18	29.48	41.02	28.01
25	48.00	32.65	46.56	31.67	44.69	30.40	42.46	28.88
26	49.61	33.61	48.12	32.61	46.20	31.30	43.89	29.74
27	50.85	34.60	49.32	33.56	47.35	32.22	44.98	30.61
28	52.83	35.57	51.25	34.50	49.20	33.12	46.74	31.46
29	54.46	36.55	52.83	35.45	50.71	34.03	48.18	32.33
30	56.07	37.52	54.39	36.39	52.21	34.94	49.60	33.19
31	57.27	38.21	55.55	37.06	53.33	35.58	50.66	33.80
32	58.87	39.17	57.10	37.99	54.82	36.47	52.08	34.65
33	60.49	40.14	58.67	38.94	56.32	37.38	53.51	35.51
34	62.09	41.11	60.22	39.87	57.81	38.28	54.92	36.36
35	63.69	42.08	61.78	40.82	59.31	39.19	56.34	37.23
36	65.29	43.04	63.33	41.75	60.80	40.08	57.76	38.08
37	66.90	44.02	64.90	42.70	62.30	40.99	59.18	38.94
38	68.50	45.33	66.45	43.97	63.79	42.21	60.60	40.10
39	70.10	46.49	68.00	45.09	65.28	43.29	62.02	41.12
40	71.70	47.64	69.55	46.21	66.77	44.36	63.43	42.14
41	72.79	48.26	70.60	46.81	67.78	44.94	64.39	42.69
42	74.38	49.23	72.15	47.75	69.26	45.84	65.80	43.55
43	75.97	50.21	73.69	48.71	70.74	46.76	67.20	44.42
44	77.56	51.57	75.23	50.03	72.22	48.02	68.61	45.62
45	79.16	52.56	76.78	50.99	73.71	48.95	70.03	46.50
46	80.16	53.13	77.75	51.54	74.64	49.48	70.91	47.00
47	81.74	54.94	79.28	53.29	76.11	51.16	72.31	48.60
48	83.31	56.77	80.81	55.06	77.58	52.86	73.70	50.22
49	84.78	58.64	82.24	56.88	78.95	54.60	75.00	51.87
50	86.48	60.96	83.89	59.13	80.53	56.76	76.51	53.92
51	88.06	62.45	85.42	60.58	82.00	58.15	77.90	55.24
52	89.65	63.97	86.96	62.05	83.48	59.57	79.31	56.59
53	91.23	65.52	88.49	63.56	84.95	61.01	80.70	57.96
54	92.82	67.08	90.04	65.06	86.43	62.46	82.11	59.34
55	94.40	68.64	91.57	66.58	87.90	63.92	83.51	60.72
56	95.28	69.28	92.42	67.20	88.73	64.51	84.29	61.29
57	96.85	70.37	93.94	68.26	90.19	65.53	85.68	62.25
58	98.43	71.48	95.48	69.34	91.66	66.56	87.07	63.24
59	99.99	72.58	96.99	70.40	93.11	67.58	88.46	64.20
60	101.57	74.18	98.53	71.96	94.59	69.08	89.86	65.62
61	103.14	75.30	100.05	73.04	96.04	70.12	91.24	66.61
62	104.72	76.40	101.58	74.11	97.51	71.14	92.64	67.59
63	105.51	77.48	102.35	75.16	98.25	72.15	93.34	68.54
64	107.07	78.55	103.85	76.19	99.70	73.15	94.71	69.49
65	108.63	79.70	105.37	77.31	101.16	74.22	96.10	70.51
66	110.19	80.85	106.88	78.42	102.61	75.29	97.48	71.52

(2) United Kingdom

The base rates for the three delivery options for the U.K. are set forth below. For each delivery option, the Postal Service will charge the base rates, in 1-pound increments, for the first 100,000 packages mailed by the customer during a 12-month period. Once the customer has mailed 100,000 packages, postage for the customer's next packages will be reduced by 2.0% from the base rates. Packages mailed through any of the three delivery options will count toward the customer's meeting the 100,000-package threshold.

INTERNATIONAL PACKAGE CONSIGNMENT SERVICE TO UNITED KINGDOM

Pounds to:	Base rates			For volumes > 100,000		
	Premium	Standard	Economy	Premium	Standard	Economy
1	13.87	11.17	9.95	13.59	10.95	9.75
2	15.21	12.46	11.19	14.90	12.21	10.97
3	16.54	13.75	12.43	16.21	13.47	12.18
4	17.88	15.04	13.67	17.52	14.73	13.39
5	19.21	16.32	14.91	18.83	16.00	14.61
6	20.55	17.61	16.15	20.14	17.26	15.82
7	21.88	18.90	17.39	21.44	18.52	17.04
8	23.71	20.18	18.63	23.24	19.78	18.25
9	25.08	21.47	19.87	24.58	21.04	19.47
10	26.63	22.76	21.11	26.09	22.30	20.68
11	28.00	24.05	22.35	27.44	23.57	21.90
12	29.37	25.33	23.59	28.79	24.83	23.11
13	30.96	26.62	24.82	30.34	26.09	24.33
14	32.34	27.91	26.06	31.70	27.35	25.54
15	33.96	29.20	27.30	33.28	28.61	27.76
16	35.35	30.48	28.54	34.64	29.87	27.97
17	36.99	31.77	29.78	36.25	31.13	29.19
18	38.66	33.06	31.02	37.88	32.40	30.40
19	40.61	34.35	32.26	39.80	33.66	63.62
20	42.04	35.63	33.50	41.20	34.92	32.83
21	43.47	36.92	34.74	42.60	36.18	34.05
22	44.90	38.21	35.98	44.00	37.44	35.26
23	46.33	39.49	37.22	45.40	38.70	36.48
24	47.76	40.78	38.46	46.81	39.97	37.69
25	49.19	42.07	39.70	48.21	41.23	38.91
26	50.62	43.36	40.94	49.61	42.49	40.12
27	53.44	44.64	42.18	52.37	43.75	41.34
28	54.91	45.93	43.42	53.81	45.01	42.55
29	56.38	47.22	44.66	55.25	46.27	43.77
30	57.85	48.51	45.90	56.69	47.54	44.98
31	59.31	49.79	47.14	58.13	48.80	46.20
32	60.78	51.08	48.38	59.57	50.06	47.41
33	62.25	52.37	49.62	61.01	51.32	48.63
34	63.72	53.65	50.86	62.45	52.58	49.84
35	65.19	54.94	52.10	63.88	53.84	51.06
36	66.66	56.23	53.34	65.32	55.10	52.27
37	68.13	57.52	54.58	66.76	56.37	53.48
38	69.59	58.80	55.82	68.20	57.63	54.70
39	72.45	60.09	57.06	71.00	58.89	55.91
40	73.94	61.38	58.30	72.46	60.15	57.13
41	75.44	62.67	59.54	73.93	61.41	58.34
42	76.94	63.95	60.77	75.40	62.67	59.56
43	78.44	65.24	62.01	76.87	63.94	60.77
44	79.93	66.53	63.25	78.33	65.20	61.99
45	81.43	67.82	64.49	79.80	66.46	63.20
46	82.93	69.10	65.73	81.27	67.72	64.42
47	84.42	70.39	66.97	82.74	68.98	65.63
48	85.92	71.68	68.21	84.20	70.24	66.85
49	87.42	72.96	69.45	85.67	71.51	68.06
50	88.91	74.25	70.69	87.14	72.77	69.28
51	90.41	75.54	71.93	88.60	74.03	70.49
52	91.91	76.83	73.17	90.07	75.29	71.71
53	93.41	78.11	74.41	91.54	76.55	72.92
54	94.90	79.40	75.65	93.01	77.81	74.14
55	96.40	80.69	76.89	94.47	79.07	75.35
56	97.90	81.98	78.13	95.94	80.34	76.57
57	99.39	83.26	79.37	97.41	81.60	77.78
58	100.89	84.55	80.61	98.87	82.86	79.00
59	102.39	85.84	81.85	100.34	84.12	80.21
60	103.89	87.13	83.09	101.81	85.38	81.43
61	105.38	88.41	84.33	103.28	86.64	82.64
62	106.88	89.70	85.57	104.74	87.91	83.86
63	108.38	90.99	86.81	106.21	89.17	85.07
64	109.87	92.27	88.05	107.68	90.43	86.29

INTERNATIONAL PACKAGE CONSIGNMENT SERVICE TO UNITED KINGDOM—Continued

Pounds to:	Base rates			For volumes > 100,000		
	Premium	Standard	Economy	Premium	Standard	Economy
65	111.37	93.56	89.29	109.14	91.69	87.50
66	112.87	94.85	90.53	110.61	92.95	88.72

III. Conclusion

Accordingly, the Postal Service hereby adopts IPCS to Canada and the United Kingdom, on an interim basis, at the rates set forth in the schedules above. Although 39 U.S.C. 407 does not require advance notice and opportunity for submission of comments, and the Postal Service is exempted by 39 U.S.C. 410(a) from the advance notice requirements of the Administrative Procedure Act regarding proposed rulemaking (5 U.S.C. 553), the Postal Service invites interested persons to submit written data, views, or arguments concerning this interim rule.

The Postal Service adopts the following amendments to the International Mail Manual, which is incorporated by reference in the Code of Federal Regulations. See 39 CFR 20.1.

List of Subjects in 39 CFR Part 20

International postal service, Foreign relations.

PART 20—[AMENDED]

1. The authority citation for 39 CFR part 20 continues to read as follows:

Authority: 5 U.S.C. 552(a); 39 U.S.C. 401, 404, 407, 408.

2. Effective immediately, subchapter 620 of the International Mail Manual, Issue 16, is amended as follows:

6 SPECIAL PROGRAMS

* * * * *

620 International Package Consignment Service

621 Description

621.1 General

International Package Consignment Service (IPCS) is a bulk mailing system that provides fast, economical international delivery of packages containing merchandise. IPCS is designed to make it easier and less costly for mail-order companies to export goods. The Postal Service provides IPCS on a destination country-specific basis pursuant to the terms and conditions stipulated in 620 and the Individual Country Listings.

* * * * *

621.3 Availability

IPCS is available only to destination countries identified in 620 and the Individual Country Listings.

622 Qualifying Customers

To qualify, a customer must enter into a service agreement containing the commitments stipulated in 625.2 and must be able to meet the general and destination country-specific preparation requirements stipulated in 620 and the Individual Country Listings.

623 General

623.1 Special Services

The special services provided for in Chapter 3 are not available for packages sent by IPCS unless specifically provided for in 620 or the Individual Country Listings.

623.2 Customs Documentation

The requirements for customs forms vary by destination country as stipulated in 620 and the Individual Country Listings.

623.3 Size and Weight Limits

Size and weight limits for packages sent by IPCS vary by destination country as stipulated in 620 and the Individual Country Listings.

623.41 Rates

Rates vary by destination country as stipulated in 620 and the Individual Country Listings.

623.42 Postage Payment Method

Postage must be paid by permit imprint or any other Postal Service approved method.

624 Preparation Requirements

624.1 General Requirements

* * * * *

624.2 Destination Country-Specific Requirements

Certain preparation requirements vary by destination country as stipulated in 620 and the Individual Country Listings.

625 IPCS Service Agreements

* * * * *

625.2 Required Provisions

a. The customer's commitment to send at least 25,000 packages (or 10,000 to the United Kingdom) by IPCS during the next 12 months to the specified destination country.

* * * * *

626 IPCS to Japan

* * * * *

Change 627 to 626.7 Customs Forms Required.

* * * * *

Change 628 to 626.8 Preparation Requirements.

* * * * *

Change 628.1 to 626.81 Express Service.

* * * * *

Change 628.11 to 626.811 Processing at JFK.

* * * * *

Change 628.12 to 626.812 Processing Mailer's Plant.

* * * * *

Change 628.2 to 626.82 Standard Air Service.

* * * * *

Change 628.3 to 626.83 Economy Air Service.

* * * * *

3. Effective immediately, chapter 6 of the International Mail Manual, Issue 16, is amended by adding new section 627 as follows:

6 SPECIAL PROGRAMS

* * * * *

620 International Package Consignment Service

* * * * *

627 IPCS to Other Destination Countries

Information concerning IPCS for the following designated countries is detailed in the Individual Country Listings (ICLs) section.

a. Canada.

b. Great Britain and Northern Ireland.

* * * * *

4. Effective immediately, the Individual Country Listing for Canada in the International Mail Manual, Issue 16, is amended by adding the following information, concerning International

Package Consignment Service, to the end of the listing.

International Package Consignment Service (IPCS)

Description

IPCS to Canada provides the customer with two delivery options and with preparation by the Postal Service of the customs forms and delivery labels required by Canada.

Delivery Options

Air Courier Service

Air Courier Service is the fastest option. The Postal Service will transport Air Courier Service packages from the customer's plant or from the designated IPCS processing facility to Canada overnight where they will receive expeditious customs clearance and be released to the delivery agent. From there, the packages will receive courier service throughout Canada and be delivered to major population centers overnight. Normal delivery times will be two to three days from dispatch to final delivery.

Ground Courier Service

Ground Courier Service will offer overnight transportation to Canada and ground transportation to final destination in Canada. It will receive the same expeditious customs clearance as Air Courier Service and normal delivery times for 95 percent of all Canadian addresses will be three to six days after dispatch from the customer's plant, depending on the location of final destination. (For addresses in the Maritimes and extreme northern territories where distance and poor roads affect transportation, delivery times could be as long as eight days.)

Processing and Acceptance

Within 500 Miles of an IPCS Processing Facility

If the plant at which the customer's ICPS packages originate is located within 500 miles of an IPCS processing facility, the Postal Service will verify and accept the packages at the customer's plant and transport them to the IPCS processing facility according to a schedule agreed upon by the Postal Service and the customer.

More than 500 Miles from an IPCS Processing Facility

If the customer's plant from which the IPCS packages will originate is located more than 500 miles from an IPCS processing facility, the customer can choose one of two processing options.

Option One: The customer will be required to present the packages to the Postal Service for verification at the customer's plant and transport them as a drop shipment to an IPCS processing facility according to a schedule agreed upon by the Postal Service and the customer.

Option Two: The customer will process the packages using Postal Service-provided computer system workstations and sort and prepare the packages as required by the Postal Service. Then, the Postal Service verifies and accepts the packages at the customer's plant and transports them by truck to the nearest air mail facility according to a schedule agreed upon by the Postal Service and the customer. From the air mail facility, the Postal Service dispatches the IPCS packages to Canada, bypassing an IPCS processing facility.

Required Package Specific Information

Requirements are the same as those detailed in Section 626.3.

Insurance and Indemnity

Air Courier Service

Packages sent through Air Courier Service are insured against loss, damage, or rifling at no additional cost. Indemnity will be paid by the Postal Service as provided in DMM S500. However, packages are not insured against delay in delivery. Neither indemnity payments nor postage refunds will be made in event of delay.

Ground Courier Service

Packages sent through Economy Service may be insured at an additional cost. See 320.

Postage

General

The base rates for the two currently available options are set forth below. These rates may be reduced by one or more of the three additive annual discounts depending on how many packages the customer mails to Canada using either of the two IPCS delivery options in a twelve month period.

Base Rates

The Postal Service will charge the base rates, in 1-pound increments, for the first 100,000 packages mailed by the customer during a 12-month period.

RATE REDUCTIONS

Number of packages	Percent discount
Up to 100,000	Base Rate.
100,001 to 500,000	3% off base rates.
500,001 to 1,000,000	4% off previously discounted rates.
1,000,001 and over	5% off previously discounted rates.

INTERNATIONAL PACKAGE CONSIGNMENT SERVICE TO CANADA

Pounds	Base rates < 100k		Volume discounts					
			101k–500k 3.00%		501k–1m 4.00%		>1m 5.00%	
	Air	Ground	Air	Ground	Air	Ground	Air	Ground
1	10.15	8.55	9.85	8.29	9.45	7.96	8.98	7.56
2	11.09	9.37	10.76	9.09	10.33	8.72	9.81	8.29
3	12.74	10.92	12.36	10.60	11.86	10.17	11.27	9.66
4	14.38	11.93	13.95	11.57	13.39	11.10	12.73	10.55
5	16.03	12.95	15.55	12.56	14.93	12.06	14.18	11.46
6	17.55	13.98	17.03	13.56	16.35	13.02	15.53	12.37
7	19.19	14.93	18.61	14.48	17.87	13.90	16.98	13.20
8	20.83	15.85	20.20	15.38	19.39	14.76	18.42	14.03
9	22.46	16.80	21.79	16.29	20.92	15.64	19.87	14.86
10	24.10	17.72	23.37	17.19	22.44	16.51	21.32	15.68
11	25.55	18.55	24.78	17.99	23.79	17.27	22.60	16.41
12	27.17	19.49	26.36	18.91	25.30	18.15	24.04	17.25
13	28.81	20.45	27.95	19.84	26.83	19.05	25.49	18.09
14	30.44	21.40	29.52	20.76	28.34	19.93	26.92	18.93

INTERNATIONAL PACKAGE CONSIGNMENT SERVICE TO CANADA—Continued

Pounds	Base rates < 100k		Volume discounts					
			101k–500k 3.00%		501k–1m 4.00%		>1m 5.00%	
	Air	Ground	Air	Ground	Air	Ground	Air	Ground
15	32.06	22.36	31.10	21.69	29.85	20.82	28.36	19.78
16	33.68	23.86	32.67	23.14	31.37	22.21	29.80	21.10
17	35.32	24.84	34.26	24.09	32.89	23.13	31.25	21.97
18	36.95	25.81	35.84	25.03	34.40	24.03	32.68	22.83
19	38.57	26.99	37.41	26.18	35.92	25.14	34.12	23.88
20	40.19	27.97	38.99	27.13	37.43	26.05	35.56	24.74
21	41.53	28.74	40.29	27.88	38.68	26.76	36.74	25.43
22	43.15	29.71	41.85	28.82	40.18	27.67	38.17	26.28
23	44.76	30.69	43.42	29.77	41.68	28.58	39.59	27.15
24	46.37	31.66	44.98	30.71	43.18	29.48	41.02	28.01
25	48.00	32.65	46.56	31.67	44.69	30.40	42.46	28.88
26	49.61	33.61	48.12	32.61	46.20	31.30	43.89	29.74
27	50.85	34.60	49.32	33.56	47.35	32.22	44.98	30.61
28	52.83	35.57	51.25	34.50	49.20	33.12	46.74	31.46
29	54.46	36.55	52.83	35.45	50.71	34.03	48.18	32.33
30	56.07	37.52	54.39	36.39	52.21	34.94	49.60	33.19
31	57.27	38.21	55.55	37.06	53.33	35.58	50.66	33.80
32	58.87	39.17	57.10	37.99	54.82	36.47	52.08	34.65
33	60.49	40.14	58.67	38.94	56.32	37.38	53.51	35.51
34	62.09	41.11	60.22	39.87	57.81	38.28	54.92	36.36
35	63.69	42.08	61.78	40.82	59.31	39.19	56.34	37.23
36	65.29	43.04	63.33	41.75	60.80	40.08	57.76	38.08
37	66.90	44.02	64.90	42.70	62.30	40.99	59.18	38.94
38	68.50	45.33	66.45	43.97	63.79	42.21	60.60	40.10
39	70.10	46.49	68.00	45.09	65.28	43.29	62.02	41.12
40	71.70	47.64	69.55	46.21	66.77	44.36	63.43	42.14
41	72.79	48.26	70.60	46.81	67.78	44.94	64.39	42.69
42	74.38	49.23	72.15	47.75	69.26	45.84	65.80	43.55
43	75.97	50.21	73.69	48.71	70.74	46.76	67.20	44.42
44	77.56	51.57	75.23	50.03	72.22	48.02	68.61	45.62
45	79.16	52.56	76.78	50.99	73.71	48.95	70.03	46.50
46	80.16	53.13	77.75	51.54	74.64	49.48	70.91	47.00
47	81.74	54.94	79.28	53.29	76.11	51.16	72.31	48.60
48	83.31	56.77	80.81	55.06	77.58	52.86	73.70	50.22
49	84.78	58.64	82.24	56.88	78.95	54.60	75.00	51.87
50	86.48	60.96	83.89	59.13	80.53	56.76	76.51	53.92
51	88.06	62.45	85.42	60.58	82.00	58.15	77.90	55.24
52	89.65	63.97	86.96	62.05	83.48	59.57	79.31	56.59
53	91.23	65.52	88.49	63.56	84.95	61.01	80.70	57.96
54	92.82	67.08	90.04	65.06	86.43	62.46	82.11	59.34
55	94.40	68.64	91.57	66.58	87.90	63.92	83.51	60.72
56	95.28	69.28	92.42	67.20	88.73	64.51	84.29	61.29
57	96.85	70.37	93.94	68.26	90.19	65.53	85.68	62.25
58	98.43	71.48	95.48	69.34	91.66	66.56	87.07	63.24
59	99.99	72.58	96.99	70.40	93.11	67.58	88.46	64.20
60	101.57	74.18	98.53	71.96	94.59	69.08	89.86	65.62
61	103.14	75.30	100.05	73.04	96.04	70.12	91.24	66.61
62	104.72	76.40	101.58	74.11	97.51	71.14	92.64	67.59
63	105.51	77.48	102.35	75.16	98.25	72.15	93.34	68.54
64	107.07	78.55	103.85	76.19	99.70	73.15	94.71	69.49
65	108.63	79.70	105.37	77.31	101.16	74.22	96.10	70.51
66	110.19	80.85	106.88	78.42	102.61	75.29	97.48	71.52

Size and Weight Limits

All Air Courier and Ground Courier Service packages must meet the following size and weight limits:

Size Limits

a. Minimum length and width: large enough to accommodate the necessary labels and customs forms on the address side.

b. Maximum length: 60 inches.

c. Maximum length and girth combined: 108 inches.

Weight Limit

Maximum weight: 66 pounds.

Customs

Customs Forms

Normally all necessary Canadian customs forms will be automatically generated by the Postal Service computer workstations. Packages mailed to Canada through an IPCS facility will not be required to bear customs forms when they are tendered to the Postal Service. The Postal Service will verify, accept, and transport these packages to a designated IPCS processing facility. After scanning the customer-printed barcode on each package and correlating it with the package-specific information transmitted by the customer, the Postal

Service will print the necessary customs forms and then affix them to the customer's packages as part of the processing operation at the IPCS processing facility. However, during the interim period in which the Postal Service and the customer are working together to establish the information systems linkages to enable the Postal Service to accomplish this, the customer may be required to prepare the necessary customs forms on its own and affix the forms to the packages before tendering them to the Postal Service. In those cases where the computer workstations are located at the customer's plant and operated by customer employees, the USPS computer will print the customs forms, and the customer will be required to affix these forms to the appropriate packages as instructed by the Postal Service prior to verification and acceptance of the mail.

Customs Clearance

The Postal Service has developed the Customs Pre-Advisory System (CPAS) as part of IPCS processing. This electronic system collects package-specific data to satisfy customs requirements as packages are processed using the USPS computer workstations located at either an IPCS facility or the customer's plant. The system electronically advises the USPS delivery agent and Canadian Customs of the contents of each package mailed. Since this advisory information arrives before the mail, CPAS facilitates and simplifies customs clearance. Electronic pre-notification of the package contents and automatic preparation of required customs declarations assures the fastest clearance through Canadian Customs and reduces costs for the customer and the Postal Service.

Preparation Requirements

Air Courier Service

Every package sent through Air Courier Service must bear a label identifying it as an Air Courier Service package. The customer is not normally required to affix this label. The Postal Service prints the necessary label and affixes it to the Air Courier Service package. However, during the interim period in which the Postal Service and the customer are establishing the information systems linkages to enable the Postal Service to accomplish this, the customer is required to affix an alternative label as instructed by the Postal Service to every Air Courier Service package.

Ground Courier Service

There are no Canada-specific preparation requirements for packages sent through Ground Courier Service. Packages weighing 1 pound or less must bear the Small Packet marking (see 264.21).

* * * * *

5. Effective immediately, the Individual Country Listing for the Great Britain and Northern Ireland in the International Mail Manual, Issue 16, is amended by adding the following information, concerning International Package Consignment Service, to the end of the listing.

International Package Consignment Service (IPCS)

Description

IPCS to the United Kingdom (U.K.) provides the customer with three delivery options and with preparation by the Postal Service of the customs and delivery labels required by the British Post Office.

Delivery Options

Premium Service

The Postal Service will transport Premium packages to the U.K. by air. Once a package is dispatched from the customer's facility, it should clear Customs and be delivered in the U.K. by close of business on the third working day. The customer can track packages through delivery and reports on delivery performance are furnished to the customer in the formats and at the frequencies agreed upon by the Postal Service and the customer.

Standard Service

The Postal Service will transport Standard packages to the U.K. by air. Once a package is dispatched from the customer's facility, it should clear Customs and be delivered by close of business on the fourth working day. The customer can track packages through delivery and reports on delivery performance are furnished to the customer in the formats and at the frequencies agreed upon by the Postal Service and the customer.

Economy Service

The Postal Service will transport Economy packages to the U.K. by air. Once a package is dispatched from a customer's facility, it should clear Customs and be delivered by close of business the fifth or sixth working day. Tracking and tracing is available to the point of entry into the U.K. domestic mail stream.

Processing and Acceptance

Within 500 Miles of an IPCS Processing Facility

If the plant at which the customer's ICPS packages originate is located within 500 miles of an IPCS processing facility, the Postal Service will accept the packages at the customer's plant and transport them by truck to the IPCS processing facility according to a schedule agreed upon by the Postal Service and the customer.

More than 500 Miles from an IPCS Processing Facility

If the customer's plant from which the IPCS packages will originate is located more than 500 miles from an IPCS processing facility, the customer can choose one of two processing options.

Option One: The customer will be required to present the packages to the Postal Service for verification at the customer's plant and transport them as a drop shipment to an IPCS processing facility according to a schedule agreed upon by the Postal Service and the customer.

Option Two: The customer will process the packages using Postal Service-provided computer system workstations and sort and prepare the packages as required by the Postal Service. Then, the Postal Service accepts the packages at the customer's plant and transports them by truck to the nearest air mail facility according to a schedule agreed upon by the Postal Service and the customer. From the air mail facility, the Postal Service dispatches the IPCS packages to the U.K., bypassing an IPCS processing facility.

Required Package-Specific Information

Requirements are the same as those detailed in Section 626.3.

Insurance and Indemnity

Premium and Standard Services

Packages sent through the Premium or Standard Services are insured against loss, damage, or rifling at no additional cost. Indemnity will be paid by the Postal Service as provided in DMM S500. However, Premium and Standard packages are not insured against delay in delivery. Neither indemnity payments nor postage refunds will be made in event of delay.

Economy Service

Packages sent through Economy Service may be insured at an additional cost. See 320.

Postage

General

The base rates for the three available delivery options are set forth below. These rates may be reduced by an annual discount depending on how many packages the customer mails to the U.K. using any of the three IPCS delivery options in a twelve month period.

Base Rates

The Postal Service will charge the base rates, in 1-pound increments, for the first 100,000 packages mailed by the customer during a 12-month period.

RATE REDUCTIONS

Number of packages	Percent discount
Up to 100,000	Base Rate.
100,001 and over	2%.

INTERNATIONAL PACKAGE CONSIGNMENT SERVICE

Pounds to:	Base rates			For volumes > 100,000		
	Premium	Standard	Economy	Premium	Standard	Economy
1	13.87	11.17	9.95	13.59	10.95	9.75
2	15.21	12.46	11.19	14.90	12.21	10.97
3	16.54	13.75	12.43	16.21	13.47	12.18
4	17.88	15.04	13.67	17.52	14.73	13.39
5	19.21	16.32	14.91	18.83	16.00	14.61
6	20.55	17.61	16.15	20.14	17.26	15.82
7	21.88	18.90	17.39	21.44	18.52	17.04
8	23.71	20.18	18.63	23.24	19.78	18.25
9	25.08	21.47	19.87	24.58	21.04	19.47
10	26.63	22.76	21.11	26.09	22.30	20.68
11	28.00	24.05	22.35	27.44	23.57	21.90
12	29.37	25.33	23.59	28.79	24.83	23.11
13	30.96	26.62	24.82	30.34	26.09	24.33
14	32.34	27.91	26.06	31.70	27.35	25.54
15	33.96	29.20	27.30	33.28	28.61	27.76
16	35.35	30.48	28.54	34.64	29.87	27.97
17	36.99	31.77	29.78	36.25	31.13	29.19
18	38.66	33.06	31.02	37.88	32.40	30.40
19	40.61	34.35	32.26	39.80	33.66	63.62
20	42.04	35.63	33.50	41.20	34.92	32.83
21	43.47	36.92	34.74	42.60	36.18	34.05
22	44.90	38.21	35.98	44.00	37.44	35.26
23	46.33	39.49	37.22	45.40	38.70	36.48
24	47.76	40.78	38.46	46.81	39.97	37.69
25	49.19	42.07	39.70	48.21	41.23	38.91
26	50.62	43.36	40.94	49.61	42.49	40.12
27	53.44	44.64	42.18	52.37	43.75	41.34
28	54.91	45.93	43.42	53.81	45.01	42.55
29	56.38	47.22	44.66	55.25	46.27	43.77
30	57.85	48.51	45.90	56.69	47.54	44.98
31	59.31	49.79	47.14	58.13	48.80	46.20
32	60.78	51.08	48.38	59.57	50.06	47.41
33	62.25	52.37	49.62	61.01	51.32	48.63
34	63.72	53.65	50.86	62.45	52.58	49.84
35	65.19	54.94	52.10	63.88	53.84	51.06
36	66.66	56.23	53.34	65.32	55.10	52.27
37	68.13	57.52	54.58	66.76	56.37	53.48
38	69.59	58.80	55.82	68.20	57.63	54.70
39	72.45	60.09	57.06	71.00	58.89	55.91
40	73.94	61.38	58.30	72.46	60.15	57.13
41	75.44	62.67	59.54	73.93	61.41	58.34
42	76.94	63.95	60.77	75.40	62.67	59.56
43	78.44	65.24	62.01	76.87	63.94	60.77
44	79.93	66.53	63.25	78.33	65.20	61.99
45	81.43	67.82	64.49	79.80	66.46	63.20
46	82.93	69.10	65.73	81.27	67.72	64.42
47	84.42	70.39	66.97	82.74	68.98	65.63
48	85.92	71.68	68.21	84.20	70.24	66.85
49	87.42	72.96	69.45	85.67	71.51	68.06
50	88.91	74.25	70.69	87.14	72.77	69.28
51	90.41	75.54	71.93	88.60	74.03	70.49
52	91.91	76.83	73.17	90.07	75.29	71.71
53	93.41	78.11	74.41	91.54	76.55	72.92
54	94.90	79.40	75.65	93.01	77.81	74.14
55	96.40	80.69	76.89	94.47	79.07	75.35
56	97.90	81.98	78.13	95.94	80.34	76.57
57	99.39	83.26	79.37	97.41	81.60	77.78
58	100.89	84.55	80.61	98.87	82.86	79.00
59	102.39	85.84	81.85	100.34	84.12	80.21
60	103.89	87.13	83.09	101.81	85.38	81.43

INTERNATIONAL PACKAGE CONSIGNMENT SERVICE—Continued

Pounds to:	Base rates			For volumes > 100,000		
	Premium	Standard	Economy	Premium	Standard	Economy
61	105.38	88.41	84.33	103.28	86.64	82.64
62	106.88	89.70	85.57	104.74	87.91	83.86
63	108.38	90.99	86.81	106.21	89.17	85.07
64	109.87	92.27	88.05	107.68	90.43	86.29
65	111.37	93.56	89.29	109.14	91.69	87.50
66	112.87	94.85	90.53	110.61	92.95	88.72

Size and Weight Limits

All packages must meet the following size and weight limits:

Size Limits

a. Minimum length and width: large enough to accommodate the necessary customs/delivery label on the address side.

b. Maximum length: 60 inches.

c. Maximum length and girth combined: 108 inches.

Weight Limit

Maximum weight: 66 pounds.

Customs

Customs Forms

Normally all necessary U.K. customs forms will be automatically generated by the Postal Service computer workstations. Packages mailed to the U.K. through an IPCS processing facility will not be required to bear customs forms when they are tendered to the Postal Service. The Postal Service will verify, accept, and transport these packages to a designated IPCS processing facility. After scanning the customer-printed barcode on each package and correlating it with the package-specific information transmitted by the customer, the Postal Service will print the necessary customs forms and then affix them to the customer's packages as part of the processing operation at the IPCS Processing Facility. However, during the interim period in which the Postal Service and the customer are working together to establish the information systems linkages to enable the Postal Service to accomplish this, the customer may be required to prepare the necessary customs forms on its own and affix the forms to the packages before tendering them to the Postal Service. In those cases where the computer workstations are located at the customer's plant and operated by customer employees, the USPS computer workstations will print the customs forms, and the customer will be required to affix these forms to the appropriate packages as instructed by the Postal Service prior to verification and acceptance of the mail.

Customs Clearance

The Postal Service has developed the Customs Pre-Advisory System (CPAS) as part of IPCS processing. This electronic system collects package-specific data to satisfy customs requirements as packages are processed using the USPS computer workstations located at either an IPCS facility or the customer's plant. The system electronically advises the USPS delivery agent and Customs in the U.K. of the contents of each package mailed. Since this advisory information arrives before the mail, CPAS facilitates and simplifies customs clearance. Electronic pre-notification of the package contents and automatic preparation of required customs declarations assures the fastest clearance through U.K. Customs and reduces costs for the customer and the Postal Service.

Preparation Requirements

Every package sent through Premium, Standard or Economy Service must bear a label identifying it as a Premium, a Standard or an Economy Service package. The customer is not normally required to affix this label. The Postal Service prints the necessary label and affixes it to the package. However, during the interim period in which the Postal Service and the customer are establishing the information systems linkages to enable the Postal Service to accomplish this, the customer is required to affix an alternative label as instructed by the Postal Service to every package.

Stanley F. Mires,

Chief Counsel, Legislative.

[FR Doc. 96–7435 Filed 3–27–96; 8:45 am]

BILLING CODE 7710–12–P

39 CFR Part 20

Implementation of Global Priority Mail

AGENCY: Postal Service.

ACTION: Final rule.

SUMMARY: Global Priority Mail is a new international mail service designed for correspondence and documents. Global Priority Mail items receive priority handling in the United States and in destination countries. Interim implementing regulations were published in the Federal Register on March 17, 1995, 60 FR 14370, under the name Worldpost Priority Letter. The Postal Service is adopting the interim regulations as final, with a change in the name of the service to Global Priority Mail and the addition of new acceptance points.

EFFECTIVE DATE: March 25, 1996.

FOR FURTHER INFORMATION CONTACT: Jay Thabet (202) 268–6095.

SUPPLEMENTARY INFORMATION: On March 17, 1995, the Postal Service published in the Federal Register (60 FR 14370) interim regulations implementing WORLDPOST Priority Letter and requested comments. Comments were due on or before April 17, 1995. On April 10, 1995, (60 FR 18009), the Postal Service published a notice correcting certain ZIP Code areas in which WORLDPOST Priority Letter was available.

WORLDPOST Priority Letter service is an expedited airmail service providing fast, reliable, and economical delivery of items mailable as letters. Although a WORLDPOST Priority Letter item will travel in the normal airmail stream between the United States and the destination country, the item will receive priority handling in the United States and in the destination country. In the United States, after the item is deposited, the Postal Service will transport it in a dedicated stream to the appropriate gateway for dispatch. Upon arrival in the destination country, the item will also receive priority handling. Service is available only in certain ZIP Code areas in the United States and only to certain countries.

The Postal Service received one comment on the interim regulations. That comment suggested that the service be made available to additional ZIP Code areas in the Northern New Jersey area. This suggestion has been found to

be feasible and ZIP Code areas in the Northern New Jersey area will be added.

Based on its experience in the pilot, the Postal Service is making two other changes. First, the name of the service is being changed to Global Priority Mail. Second, the sizes of the envelopes are being increased slightly. The small envelope will increase from 5 inches by 8⅞ inches to 6 inches by 10 inches. The large envelope will increase from 9 inches by 11½ inches to 9½ inches by 12½ inches.

The Postal Service adopts the following amendments to the International Mail Manual, which is incorporated by reference in the Code of Federal Regulations. See 39 CFR 20.1.

List of Subjects in 39 CFR Part 20

International postal service, Foreign relations.

PART 20—[AMENDED]

1. The authority citation for 39 CFR part 20 continues to read as follows:

Authority: 5 U.S.C. 552(a); 39 U.S.C. 401, 404, 407, 408.

2. Chapter 2 of the International Mail Manual is amended by revising part 226 to read as follows:

2 CONDITIONS FOR MAILING

* * * * *

226 Global Priority Mail

226.1 General

226.11 Definition

Global Priority Mail is an expedited airmail letter service providing fast, reliable, and economical delivery of all items mailable as letters. Global Priority Mail items receive priority handling in the United States and in destination countries. Service is available only to destination countries identified in 226.2, from post offices identified in 226.3. Global Priority Mail items must be mailed in special envelopes provided for this purpose by the Postal Service.

226.12 Permissible Items

All items admitted in letters (see 221.1) are accepted in Global Priority Mail as long as the contents fit securely into the Global Priority Mail envelopes provided by the Postal Service. Global Priority Mail items may contain dutiable merchandise unless the country of destination prohibits dutiable merchandise in letters (see 224.51). However, Global Priority Mail items that contain dutiable merchandise might experience delay in delivery caused by customs handling.

226.13 Addressing

See 122. All items must bear the complete delivery address of the addressee and the full name (no abbreviations) of the destination country.

226.2 Availability

Global Priority Mail service is available only to the following countries:

Western Europe	Pacific Rim	Canada
Belgium	Australia	Canada.
France	Hong Kong	
Germany	Japan	
Great Britain*	New Zealand.	
Netherlands, The.	Singapore	
Norway	Taiwan	
Sweden		

*Includes all points in England, Scotland, Wales, Northern Ireland, Guernsey, Jersey, and the Isle of Man.

226.3 Mailing Locations

226.31 Acceptance Offices and Pickup Service Locations

Global Priority Mail service is available only through the designated post offices listed in 226.32. Global Priority Mail items must not be accepted or deposited in areas not listed in 226.32.

226.32 Service Areas

Service is available only from the metropolitan areas as defined by the ZIP Code ranges shown below. Within these service areas, prepaid items may be given to carriers, deposited in Express Mail collection boxes, or mailed at post offices, stations, and branches. Pickup service is available.

Metropolitan area	ZIP Code service area
Atlanta, GA	300–303, 305, 306, 311.
Boston, MA	018–024.
Dallas/Ft. Worth, TX.	750–754, 760–762, 764.
Los Angeles, CA.	900–918, 926–928.
Miami, FL	330–334, 349.
New Jersey	070–089.
New York, NY	068, 069, 100–108, 110–118.
Washington, DC.	200, 201, 203, 205, 20813–20815, 20817, 20850–20852, 20854, 20855, 20898, 20901, 20902, 20904, 20906, 20907, 20910–20912, 220–223.

226.4 Postage

226.41 Rates

Rates are based on size (either small or large) and destination as follows:

Destination	Envelope size	
	Small	Large
Western Europe	$3.75	$6.95
Pacific Rim	4.95	8.95
Canada	3.75	6.95

226.42 Pickup Service

On-call and scheduled pickup service are available for Global Priority Mail for a charge of $4.95 for each pickup stop, regardless of the number of pieces picked up. Only one pickup fee is charged if domestic or international Express Mail, domestic Priority Mail, or domestic or international parcel post is picked up at the same time. (See DMM D010 for standards for pickup service.)

226.43 Postage Payment Methods

Postage for Global Priority Mail may be paid by adhesive stamps, postage meter and meter stamps, or, if presented at a post office, postage validation imprinter (PVI) labels.

226.5 Packaging

Items must be placed in special Global Priority Mail envelopes provided by the Postal Service. All items that cannot be adequately protected by these envelopes should not be mailed using this service. Envelopes must be sealed.

226.6 Size and Weight Limits

226.61 General

Two sizes of envelopes are available from the Postal Service for mailing Global Priority Mail items. Postage rates are based on the size of the envelope used, not the weight of the item. (See 226.41 for rates.)

226.62 Size Limits

Sizes of the required Postal Service-provided envelopes are:

a. Small size: 6×10 inches.

b. Large size: 9½×12½ inches.

226.63 Weight Limits

The Postal Service-provided envelopes are not intended to accommodate items weighing more than several ounces. However, the maximum weight for letter-class (LC) items is 4 pounds.

226.7 Customs Forms Required

If Global Priority Mail contains dutiable merchandise, the sender must prepare a customs declaration and affix it to the letter. See 123 for instructions. Certain nonpostal export forms may be required as described in Chapter 5.

226.8 Special Services

Mailers may obtain certificates of mailing (see 310). No other special services such as registry, insurance, restricted delivery, return receipt, or recorded delivery are available.

* * * * * * *

A transmittal letter making the changes in the pages of the International Mail Manual will be published and transmitted automatically to subscribers. Notice of issuance of the transmittal letter will be published in the Federal Register as provided by 39 CFR 20.3.

Stanley F. Mires,

Chief Counsel, Legislative.

[FR Doc. 96–7491 Filed 3–25–96; 4:51 pm]

BILLING CODE 7710–12–M

ENVIRONMENTAL PROTECTION AGENCY

40 CFR Part 52

[MO 004–1004; FRL–5447–5]

Withdrawal for State Implementation Plan; State of Missouri

AGENCY: Environmental Protection Agency (EPA).

ACTION: Withdrawal of direct final rule.

SUMMARY: Due to adverse comments, the EPA is withdrawing its direct final rule approving Missouri's ''Compliance Monitoring Usage'' rule (10 CSR 10–6.280) as a revision to Missouri's State Implementation Plan.

EFFECTIVE DATE: This withdrawal is effective March 28, 1996.

FOR FURTHER INFORMATION CONTACT: Joshua A. Tapp at (913) 551–7606.

SUPPLEMENTARY INFORMATION: The EPA's direct final rule approving Missouri rule 10 CSR 10–6.280 (Compliance Monitoring Usage) was published in the Federal Register on February 6, 1996 (61 FR 4352). This document stated that if adverse or critical comments were received by March 7, 1996, the effective date of the approval would be delayed and timely notice would be published in the Federal Register. Due to receiving adverse comments within the comment period, the EPA is withdrawing the final rule and will address all public comments received during the comment period in a subsequent action based on the proposed rule action also published on February 6, 1996 (61 FR 4391). EPA will not institute a second comment period on this document.

For additional information see the direct final rule and proposed rule located in the Federal Register citations mentioned above.

List of Subjects in 40 CFR Part 52

Environmental protection, Air pollution control, Carbon monoxide, Hydrocarbons, Incorporation by reference, Intergovernmental relations, Lead, Nitrogen dioxide, Ozone, Particulate matter, Reporting and recordkeeping requirements, Sulfur oxides, Volatile organic compounds.

Dated: March 18, 1996.

Dennis Grams,

Regional Administrator.

[FR Doc. 96–7603 Filed 3–27–96; 8:45 am]

BILLING CODE 6560–50–P

---

40 CFR Part 271

[FRL–5447–6]

Louisiana: Final Authorization of State Hazardous Waste Management Program Revisions

AGENCY: Environmental Protection Agency.

ACTION: Immediate final rule.

SUMMARY: The State of Louisiana has applied for final authorization of revisions to its hazardous waste program under the Resource Conservation and Recovery Act (RCRA). The Environmental Protection Agency (EPA) has reviewed Louisiana's application and determined that its hazardous waste program revision satisfies all of the requirements necessary to qualify for final authorization. Unless adverse written comments are received during the review and comment period provided for public participation in this process, EPA intends to approve Louisiana's hazardous waste program revision subject to the authority retained by EPA in accordance with Hazardous and Solid Waste Amendments of 1984. Louisiana's application for the program revision is available for public review and comment.

DATES: This authorization for Louisiana shall be effective June 11, 1996 unless EPA publishes a prior Federal Register (FR) action withdrawing this immediate final rule. All comments on Louisiana's program revision application must be received by the close of business May 12, 1996.

ADDRESSES: Copies of the Louisiana program revision application and the materials which EPA used in evaluating the revision are available for inspection and copying from 8:30 a.m. to 4 p.m., Monday through Friday at the following addresses: Louisiana Department of Environmental Quality, H.B. Garlock Building, 7290 Bluebonnet, Baton Rouge, Louisiana 70810, phone (504) 765–0617 and U.S. EPA, Region 6 Library, 12th Floor, First Interstate Bank Tower at Fountain Place, 1445 Ross Avenue, Dallas, Texas 75202–2733, phone (214) 665–6444. Written comments, referring to Docket Number LA–95–5, should be sent to Alima Patterson, Region 6 Authorization Coordinator, Grants and Authorization Section (6PD–G), U.S. EPA Region 6, First Interstate Bank Tower at Fountain Place, 1445 Ross Avenue, Dallas, Texas 75202–2733, (214) 665–8533.

FOR FURTHER INFORMATION CONTACT: Alima Patterson, Region 6 Authorization Coordinator, Grants and Authorization Section (6PD–G), U.S. EPA Region 6, First Interstate Bank Tower at Fountain Place, 1445 Ross Avenue, Dallas, Texas 75202–2733, (214) 665–8533.

SUPPLEMENTARY INFORMATION:

A. Background

States authorized under section 3006(b) of the Resource Conservation and Recovery Act (''RCRA or the Act''), 42 U.S.C. 6926(b), have a continuing obligation to maintain a hazardous waste program that is equivalent to, consistent with, and no less stringent than the Federal hazardous waste program. Revisions to State hazardous waste programs are necessary when Federal or State statutory or regulatory authority is modified or when certain other changes occur. Most commonly, State program revisions are necessitated by changes to EPA's regulations in 40 CFR parts 124, 260–268, and 270.

B. Louisiana

Louisiana initially received final authorization on February 7, 1985 (see 50 FR 3348), to implement its base hazardous waste management program. Louisiana received authorization for revisions to its program on January 29, 1990 (see 54 FR 48889), October 25, 1991 (see 56 FR 41958), and Corrections at (56 FR 51762), effective January 23, 1995 (see 59 FR 55368–55371), and Corrections at (see 60 FR 18360), March 8, 1995 (see 59 FR 66200) and January 2, 1996 (see 60 FR 53707). On December 11, 1995, Louisiana submitted a final complete program revision application for additional program approvals. Today, Louisiana is seeking approval of its program revision in accordance with 40 CFR 271.21(b)(3).

In 1983, the Louisiana legislature adopted Act 97, which amended and reenacted Louisiana Revised Statutes 30:1051 et seq., the Environmental Affairs Act. This Act created the Louisiana Department of Environmental Quality (LDEQ), which has lead agency jurisdictional authority for administering the RCRA Subtitle C program in the State.

EPA reviewed Louisiana's application and made an immediate final decision that Louisiana's hazardous waste program revision satisfies all of the requirements necessary to qualify for final authorization. Consequently, EPA intends to grant authorization for the additional program modifications to Louisiana. The public may submit written comments on EPA's proposed final decision until May 12, 1996. Copies of LDEQ's application for program revision are available for inspection and copying at the locations indicated in the **ADDRESSES** section of this document.

Approval of LDEQ's program revision shall become effective 75 days from the date this notice is published, unless an adverse written comment pertaining to the State's revision discussed in this notice is received by the end of the comment period. If an adverse written comment is received, EPA will publish either (1) a withdrawal of the immediate final decision or (2) a notice containing a response to the comment which either affirms that the immediate final decision takes effect or reverses the decision.

Louisiana's program revision application includes State regulatory

changes that are equivalent to the rules promulgated in the Federal RCRA implementing regulations in 40 CFR parts 124, 260–262, 264, 265, 266, and 270 that were published in the FR from July 1, 1987, through June 30, 1993. This proposed approval includes the provisions that are listed in the chart below. This chart also lists the State analogs that are being recognized as equivalent to the appropriate Federal requirements.

Federal citation	State analog
1. Identification and Listing of Hazardous Waste; and Designation, Reportable Quantities, and Notification (Amendment to the Bevill Exclusion), [53 FR 35412] September 13, 1988 (Checklist 53).	Louisiana Revised Statutes (LRS) 30: § 2180 et seq, as amended June 14, 1991, effective June 14, 1991; Louisiana Hazardous Waste Regulations (LHWR) § 4901.C, as amended March 20, 1995; effective March 20, 1995, § 4901.G Table 6, as amended September 20, 1995; effective September 20, 1995, § 105.D17.A-F, as amended September 20, 1994; effective September 20, 1994.
2. Permit Modifications for Hazardous Waste Management Facilities, [53 FR 37912] September 28, 1988. (Checklist 54).	LRS 30: 2180 et seq, as amended June 14, 1991, effective June 14, 1991; LHWR § 323.B as amended September 20, 1995; effective September 20, 1995, § 1513.D, as amended November 20, 1992; effective November 20, 1992, § 3511.C, as amended March 20, 1995; effective March 20, 1995, § 3523.D, as amended November 20, 1992; effective November 20, 1992, § 4381.C, as amended March 20, 1995; effective March 20, 1995, § 4391.D, as amended July 20, 1995, effective July 20, 1992, § 109, as amended October 20, 1994; effective October 20, 1994 § 307.A, as amended March 20, 1995; effective March 20, 1995, § 309.L.2, as amended September 20, 1994; effective September 20, 1994, § 321.B.C, as amended March 20, 1995; effective March 20, 1995, § 322, as amended September 20, 1995; effective September 20, 1995, § 3115.A, B, as amended November 20, 1992; effective November 20, 1992, and § 2707.D, as amended July 20, 1990; effective July 20, 1990.
3. Identification and Listing of Hazardous Waste; Removal of Iron Dextran from the List of Hazardous Wastes, [53 FR 43878] October 31, 1988. (Checklist 56).	LRS 30: 2180 et seq, as amended June 14, 1991, effective June 14, 1991; LHWR § 4901.F.Table 4, as amended September 20, 1994; effective September 20, 1994, § 3105.Table 1, as amended September 20, 1995; effective September 20, 1995, § 4901.E.Table 3, as amended September 20, 1994; effective September 20, 1994, §§ 3105 Table 1, and 4901.E, as amended September 20, 1995, effective September 20, 1995, and LHWR Chapter 31.Table 1, as amended September 20, 1994; effective September 20, 1994.
4. Identification and Listing of Hazardous Waste; Removal of Strontium Sulfide From the List of Hazardous Waste, [53 FR 43881] October 31, 1988. (Checklist 57].	LRS 30: 2180 et seq, as amended June 14, 1991, effective June 14, 1991; LHWR § 4901.F.Table 4, as amended September 20, 1994; effective September 20, 1994, § 3105.Table 1, as amended September 20, 1995; effective September 20, 1995, § 4901.E.Table 3, as amended September 20, 1994; effective September 20, 1994, §§ 3105 Table 1, and 4901.E, as amended September 20, 1995, effective September 20, 1995, and LHWR Chapter 31.Table 1, as amended September 20, 1994; effective September 20, 1994.
5. Changes to Interim Status Facilities for Hazardous Waste Management Permits; Procedures for Post-Closure Permitting, [54 FR 9596] March 7, 1989. (Checklist 61).	LRS 30: 2180 et seq, as amended June 14, 1991, effective June 14, 1991; LHWR § 105, as amended September 20, 1995; effective September 20, 1995, § 301.B, as amended November 20, 1992; effective November 20, 1992, § 323.A, as amended October 20, 1994; effective October 20, 1994, § 701, as amended November 20, 1992; effective November 20, 1992, § 705.A, B, as amended July 20, 1990; effective July 20, 1990, § 322, as amended September 20, 1995, effective September 20, 1995, §§ 109, 305.A, and 503, as amended October 20, 1994; effective October 20, 1994, and § 706, as amended July 20, 1990; effective July 20, 1990, § 4303.A, B, as amended March 20, 1995; effective March 20, 1995, and § 4305.C-E, as amended October 20, 1994; effective October 20, 1994.
6. Delay of Closure Period for Hazardous Waste Management Facilities, [54 FR 33376] August 14, 1989. (Checklist 64).	LRS 30: 2180 et seq, as amended June 14, 1991 effective June 14, 1991; LHWR §§ 1519.A–B, and 3511.D, as amended March 20, 1995; effective March 20, 1995, § 3513.A–E, as amended September 20, 1994; effective September 20, 1994, §§ 3705.A, 4313, 4381.D.2, 4381.D.2.a–b and 4383.A–E, as amended March 20, 1995; effective March 20, 1995 § 4401.A.3–4, as amended August 20, 1987; effective August 20, 1987, and § 322, as amended September 20, 1995; effective September 20, 1995.
7. Reportable Quantity Adjustment Methyl Bromide Production Wastes, [54 FR 41402] October 6, 1989. (Checklist 68).	LRS 30: 2180 et seq, as amended June 14, 1991, effective June 14, 1991; LHWR § 4901.C, as amended March 20, 1995; effective March 20, 1995, Chapter 49.App A.Tbl 8–10, as amended September 20, 1995, effective September 20, 1995, § 4901.B.Tbl 1, as amended September 20, 1994; effective September 20, 1994, §§ 4901.G.Tbl 6, and 3105, Tbl 1, as amended September 20, 1995; effective September 20, 1995.
8. Reportable Quantity Adjustment (F024 & F025), [54 FR 50986] December 11, 1989. (Checklist 69).	LRS 30: 2180 et seq, as amended June 14, 1991, effective June 14, 1991; LHWR § 4901.C, as amended March 20, 1995; effective March 20, 1995, Chapter 49.App A.Tbl 8–10, as amended September 20, 1995, effective September 20, 1995, § 4901.B.Tbl 1, as amended September 20, 1995; effective September 20, 1995.
9. Toxicity Characteristics Revisions, [55 FR 11798] March 29, 1990, and Toxicity Characteristics Revisions (Correction 1), [55 FR 26986] June 29, 1990. (Checklists 74 and 74.1).	LRS 30: 2180 et seq, as amended June 14, 1991; effective June 14, 1991; LHWR § 105.D.15, as amended September 20, 1994; effective September 20, 1994, § 105.D.19, as amended March 20, 1995; effective March 20, 1995, §§ 105.D.39, and 105.D.40, as amended September 20, 1994; effective September 20, 1994, § 4903.E.1, and 4903.E.2, as amended November 20, 1992; effective November 20, 1992, § 4901.B.Tbl.1, as amended September 20, 1994, effective September 20, 1994 § Chapter 49.App.B, as amended September 20, 1995; effective September 20, 1995, § 2503.N.1, as amended March 20, 1995; effective March 20, 1995, § 4462.D.1., as amended September 20, 1994; effective September 20, 1994; § 4481.A, as amended April 20, 1991; effective April 20, 1991, and Chapter 49.App.B, as amended September 20, 1995; effective September 20, 1995.
10. Listing of 1,1-Dimethylhydrazine Production Waste, [55 FR 18496] May 2, 1990. (Checklist 75).	LRS 30: 2180 et seq, as amended June 14, 1991, effective June 14, 1991; LHWR § 4901.C, as amended March 20, 1995; effective March 20, 1995, Chapters 49.App.A.Tbl.8, and 4901.G.Tbl.6, as amended September 20, 1995; effective September 20, 1995.

Federal citation	State analog
11. Toxicity characteristics; Hydrocarbon Recovery Operations, [55 FR 40834], October 5, 1990, Correction 1, Included on Checklist 80 [56 FR 3978] February 1, 1991, and Correction 2 Includes on Checklist 80, [56 FR 13406]. (Checklists 80, 80.1, and 80.2).	LRS 30: 2180 et seq, as amended June 14, 1991, effective June 14, 1991; LHWR § 105.D.42.a–b, as amended September 20, 1994; effective September 20, 1994.
12. Petroleum Refinery Primary and Secondary Oil/Water/Solids Separation Sludge Listings (F037 and F038), [55 FR 46354] November 2, 1990, and Correction 1, at [55 FR 51707] December 17, 1980. (Checklists 81 and 81.1).	LRS 30: 2180 et seq, as amended June 14, 1991, effective June 14, 1991; LHWR § 4901.B.2–B.2.c.ii, as amended March 20, 1995; effective March 20, 1995.
13. Wood Preserving Listings, [55 FR 50450] December 6, 1990. (Checklist 82).	LRS 30: 2180 et seq, as amended June 14, 1991, effective June 14, 1991, LHWR §§ 4901.B Table 1, 4901.G.Table 6, and 3105. Table 1, as amended September 20, 1994; effective September 20, 1994, § 105.D.45, as amended March 20, 1995; effective March 20, 1995, § 4901.B.3.a-c.xii, as amended March 20, 1995; effective March 20, 1995, § 535.A–C, as amended March 20, 1995; effective March 20, 1995, § 109.drip Pad, as amended October 20, 1994; effective October 20, 1994, § 1109.E.1.e. & E.1.c.ii, as amended March 20, 1995; effective March 20, 1995, § 1901, as amended December 20, 1992; effective December 20, 1992, §§ 2801.A–B, 2803.A–D, 2805.A–P, 2807.A–B, 2809.A–D, and 2804, as amended September 20, 1995; effective September 20, 1995, § 4431.A & A.3, as amended December 20, 1992; effective December 20, 1992, and Chapter 49 App. A Table 8, as amended September 20, 1994; effective September 20, 1994.
14. Toxicity Characteristic; Chloroflourocarbon Refrigerants, [56 FR 5910] February 13, 1991. (Checklist 84).	LRS 30: 2180 et seq, as amended June 14, 1991, effective June 14, 1991; LHWR § 105.D.,41, as amended September 20, 1994; effective September 20, 1994.
15. Removal of Strontium Sulifide from the List of Hazardous Waste; Technical Amendment, [56 FR 7567] February 25, 1991, (Checklists 86).	LRS 30: 2180 et seq, as amended June 14, 1991, effective June 14, 1991, LHWR § 4901.F.Table 4, as amended September 20, 1994; effective September 20, 1994, § 3105.Table 1, as amended September 20, 1995, effective September 20, 1995, § 4901.E.Table 3, as amended September 20, 1994; effective September 20, 1994, §§ 3105 Table 1, and 4901.E, as amended September 20, 1995, effective September 20, 1995, and LHWR Chapter 31. Table 1, as amended September 20, 1994; effective September 20, 1994.
16. Organic Air Emission Standards for Process Vents and Equipment Leaks; Technical Amendment, [56 FR 19290] April 26, 1991. (Checklist 87).	LRS 30: 2180 et seq, as amended June 14, 1991, effective June 14, 1991; LHWR § 1701, as amended July 20, 1991; effective July 20, 1991 §§ 1705.A, and 1709.F.3, as amended September 20, 1994; effective September 20, 1994, §§ 1713.B.4.b, and 1719.B.1, as amended July 20, 1991; effective July 20, 1991, § 1519.B.7, as amended October 20, 1994; effective October 30, 1994, §§ 4357.B.3, 4549.B, 4557, and 4559, as amended September 20, 1994; effective September 20, 1994, § 4565, as amended July 20, 1991; effective July 20, 1991, § 4589, as amended July 20, 1992, effective July 20, 1992, §§ 536.E and 530.D.2, as amended November 20, 1992; effective November 20, 1992.
17. Administrative Stay for K069 Listing, [56 FR 1995] May 1, 1991. (Checklist 88).	LRS 30: et seq, as amended June 14, 1991, effective June 14, 1991; LHWR §§ 4901.B Table 1 and 4901.C, as amended September 20, 1994; effective September 20, 1994.
18. Revision to F037 and F038 Listings, [56 FR 21955] May 1, 1991. (Checklist 89).	LRS 30: 2180 et seq, as amended June 14, 1991, effective June 14, 1991; LHWR §§ 4901.B Table 1 and 4901.C, as amended September 20, 1994; effective September 20, 1994.
19. Mining Exclusion III, [56 FR 27300] June 13, 1991. (Checklist 90).	LRS 30: 2180 et seq, as amended June 14, 1991, effective June 14, 1991; LHWR § 105.D.17, as amended September 20, 1994; effective September 30, 1994.
20. Administrative Stay for F032, F034, and F035 Listings, [56 FR 27332] June 13, 1991. (Checklist 91).	LRS 30: 2180 et seq, as amended June 14, 1991, effective June 14, 1991; LHWR § 4901.B.Table 1, as amended September 20, 1995; effective September 20, 1995, § 2805.A, as amended December 20, 1992; effective December 20, 1992.
21. Wood Preserving Listing: Techical Correction, [56 FR 30192] July 1, 1991. (Checklist 92).	LRS 30: 2180 et seq, as amended June 14, 1991, effective June 14, 1991; LHWR § 4901.B.3.b–B.3.b.iv, as amended March 20, 1995; effective March 20, 1995, § 1109.E.1.a–E.1.e, as amended March 20, 1995; effective March 20, 1995, §§ 2801.A–B, 2803.A–D, 2804, 2805.A–B, E, M, 2807.A, and 2809.A–C, as amended September 20, 1995; effective September 20, 1995, § 532.A.3, A.3.n–p, as amended March 20, 1995; effective March 20, 1995.
22. Exports of Hazardous Waste; Technical Correction, [56 FR 43704] September 4, 1991. (Checklist 97).	LRS 30: 2180 et seq, as amended June 14, 1991, effective June 14, 1991; LHWR § 1113.D, G, as amended September 20, 1995; effective September 20, 1995.
23. Coke Ovens Administrative Stay, [56 FR 43754] September 5, 1991. (Checklist 98).	LRS 30: 2180 et seq, as amended June 14, 1991, effective June 14, 1991; LHWR § 3001.A, as amended September 20, 1995; effective September 20, 1995.
24. Amendments to Interim Status Standards for Downgradient Ground-Water Monitoring Well Locations at Hazardous Waste Facilities, [56 FR 66365] December 23, 1991. (Checklist 99).	LRS 30: 2180 et seq, as amended June 14, 1991, effective June 14, 1991; LHWR § 109, as amended September 20, 1995; effective September 20, 1995, and § 4369.A–A.3.d, as amended March 20, 1995; effective March 20, 1995.

Federal citation	State analog
25. Liners and Leak Detection Systems for Hazardous Waste Land Disposal Units, [57 FR 3462] January 29, 1992. (Checklist 100).	LRS 30: 2180 et seq, as amended June 14, 1991, effective June 14, 1991; LHWR §§ 307.A–A.3. and 525.B–C, as amended March 20, 1995; effective March 20, 1995, §§ 322, and 533.B,D, as amended September 20, 1995; effective September 20, 1995, and § 527.C–C.1.d, E, as amended March 20, 1995; effective March 20, 1995, § 109, as amended September 20, 1995; effective September 20, 1995, §§ 1504.A–D, 1509.B.4, 1529.B.9, 2903.C–F, J–K, 2904.A–B, and 2906.A–C.4, as amended March 20, 1995; effective March 20, 1995, §§ 2907.E.2, and 2911.B.2–B.4, as amended October 20, 1994; effective October 20, 1994, § 2303.C–C.5,J, L, as amended September 20, 1994; effective September 20, 1994, §§ 2304.A–B, 2306.A–C.4, 2309.C, 2503.C–H, L–L.4, M–M.2, 2405.A–B, 2507.D–D.2, and 2508.A–C–C.4, as amended March 20, 1995; effective March 20, 1995, § 2521.B.2, as amended September 20, 1995; effective September 20, 1995, §§ 4317.B.3, 4320.A–D, and 4357.B.6, as amended September 20, 1995; effective September 20, 1995, §§ 4462.A, C–C.2, F–G, 4449.A–C, 4451.A–C.4, 4455.B–B.2, 4457.B–B.3, 4476, 4474.A–C, 4472.A–C.4, 4470, 4512.A, C–C.2, F–I, 4497.A–C, 4498.A–C.4, and 4502.A–C, as amended March 20, 1995; effective March 20, 1995, and § 2521,B.2, as amended September 20, 1995; effective September 20, 1995.
26. Used Oil Filter Exclusion, [57 FR 21524] May 20, 1992. (Checklist 104).	LRS 30: 2180 et seq, as amended June 14, 1991, effective June 14, 1991; LHWR § 105.D, as amended September 20, 1995; effective September 20, 1995.
27. Coke By-Product Exclusion, [57 FR 27880] June 22, 1992. (Checklist 105).	LRS 30: 2180 et seq, as amended June 14, 1991, effective June 14, 1991 LHWR §§ 105.D, and 3001.A, as amended September 20, 1995; effective September 20, 1995.
28. Used Oil Filter Exclusion; Technical Correction, [57 FR 29220] July 1, 1992. (Checklist 107).	LRS 30: 2180 et seq, as amended June 14, 1991, effective June 14, 1991 LHWR § 105.D.46, as amended March 20, 1995; effective March 20, 1995.
29. Toxicity Characteristics Revision; Technical Correction, [57 FR 30657] July 10, 1992. (Checklist 108).	LRS 30: 2180 et seq, as amended June 14, 1991, effective June 14, 1991 LHWR §§ 105.D.16, 105.D.19, and 4512.D.1, as amended March 20, 1995; effective March 20, 1995, and § 109 Haz.Waste.2.a, as amended October 20, 1994; effective October 20, 1994.
30. Coke By-Product Listings, [57 FR 37284] August 18, 1992. (Checklist 110).	LRS 30: 2180 et seq, as amended June 14, 1991, effective June 14, 1991 LHWR § 4901.B.Table 1, as amended September 20, 1994; effective September 20, 1994, and §§ 105.D.44, 4901.C, and 4901.G.Table 6, as amended March 20, 1995; effective March 20, 1995.
31. Recycled Used Oil Management Standards, [57 FR 41566] September 10, 1992. (Checklist 112).	LRS 30: 2180 et seq, as amended June 14, 1991, effective June 14, 1991; LHWR §§ 109 used oil, 109 haz.waste.2.e–e.ii, and 4105.C.3–C.4, as amended March 20, 1995; effective March 20, 1995, § 4105.B.4, as amended September 20, 1994; effective September 20, 1994, §§ 4105.E, 3001.B.1, 4001, 4003–4003.B.2.c, 4003.C, 4003.D–D.2, 4003.E–E.4, 4003.F, 4003.G, 4003.H, 4003.I, 4005, 4005.Table 1, 4007.A, 4007.B, 4007.C–C.2.c, 4009.A–A.4, 4009.B–B.5, 4011.A, 4011.B, 4013–4013.D.4, 4015.A, 4015.B, 4015, 4017–C.3, 4019.A, 4019.B, 4021.B–B.2, 4023.A, 4023.B, 4025.A–A.4, 4025.B, 4025.C, 4025.D–D.5, 4027.A, 4027.B, 4029.A, 4029.B, 4083.B, 4031.A–A.4, 4031.B, 4031.C–C.5, 4033.A, 4033.B–B.2, 4033.C–C2, 4033.D, 4035, 4035.A, 4035.B, 4035.C–C2. 4035.D–D.2, 4035.E–F.2, 4035.G–G.2, 4035.H–H.4, 4037.A–B.5, 4037.C, 4037.D, 4039, 4041.A–A.2, 4041.B–B.5, 4043.A, 4043.B, 4045.A–A.5, 4045.A.6.a–A.6.B, 4045.b–b.6.i.VII, 4047.a, 4047.B–B.2, 4047.C–C.2, 4049–4049.H.2.b, 4051–4051.B.3, 4053.A–C, 4055–4055.B.3, 4057, 4059, 4061.A–A.2, 4061.B–B.5, 4061.C, 4063.A–B, 4065.A, 4065.A, 4067.A, 4067.B–B.3, 4067.C–D, 4071.A–B, 4073.A–B, 4075, 4079–4079.B, 4085.A–C, 4087.A–B, 4089, 4091.A, 4091.B, 4093, 105.D.46, 105.D.47, 1501.C.2, 105.D.4, 4001 ''used oil'', 4003.B.2, 4003.B.2.b, 4003.B.2.c, 4003.C, 4003.C.1, 4003.C.1.a, 4003.C.1.b, 4003.C.2, 4003.C.3, 4003.D.1, 4003.E.3.b, 4003.E.4, 4003.I, 4005.Table 1, note, 4007.C.3, 4011.A, 4013, 4015, 4015.A, 4015.B, 4015.C, 4025.A.4, 4025.D.4, 4029.A, 4029.B, 4031.B, 4031.B, 4035, 4035.D.1.b, 4035.D.1.c, 4043.A, 4045.B.6.h.iii, 4049, 4049.A, 4049.C.1.a, 4049.C.2, 4061.B.1, 4069–4069.G.4, 4077.A–C.4, 4081.A–B, 4083.A–B, and 4085.A, as amended March 20, 1995, effective March 20, 1995.
32. Financial Responsibility for Third-Party Liability, Closure and Post-Closure, [57 FR 42832] September 16, 1992, [53 FR 33938], September 1, 1988, and [56 FR 30200] July 1, 1991. (Checklists 113, 113.1, and 113.2).	LRS 30: 2180 et seq., as amended June 14, 1991, effective June 14, 1991; LHWR §§ 3703.A.8, 3707.F.10, 4403.E.10, 4407.E.11, as amended July 20, 1992; effective July 20, 1992, §§ 4411.a–b.7.c, 4411.F.6, 4411.G–G.3, 4411.H–H.5, 4411.I–I.4, 4411.J–J.4, 4411.K, as amended May 20, 1993; effective May 20, 1993, §§ 3719.B, 3719.F–G, 3719.H.1–H.2, 3719.L, 3719.M.1–2, 3719.N.1–2, and 4399.A.8, as amended July 20, 1992; effective July 20, 1992, §§ 3719.I, 1.b.iv, and 3719J.2.d, as amended March 20, 1995; effective March 20, 1995, and § 3719.K, as amended July 20, 1992; effective July 20, 1992.
33. Chlorinated Toluene Production Waste Listing, [57 FR 47376] October 15, 1992. (Checklist 115).	LRS 30: 2180 et seq., as amended June 14, 1991, effective June 14, 1991; LHWR §§ 4901.C.Table 2, and 4901.G.Table 6, as amended March 20, 1995; effective March 20, 1995.
34. ''Mixture'' and ''Derived-From'' Rules; Response to Court Remand, [57 FR 7628] March 3, 1992, [57 FR 23062] June 1, 1992, and [57 FR 49287] October 20, 1992. (Checklists 117A, 117.A.1, and 117A.2.	LRS 30: 2180 st seq., as amended June 14, 1991, effective June 14, 1991; LHWR §§ 109.haz. waste, 109.haz. waste.1, 109.haz. waste 2, and 109.haz. waste.2.a, as amended October 20, 1994; effective October 20, 1994, § 109.haz. waste.2.c, as amended March 20, 1995; effective March 20, 1995, § 109.haz. waste.2.d, as amended October 20, 1994; effective October 20, 1994, §§ 4905.A.1, 4905.A.2, 4905.A.3, 49805.A.4, and 4905.A.5, as amended July 20, 1992; effective July 20, 1992, §§ 109.haz. waste.3, 109.haz. waste.3.a, 109.haz. waste.b, 109.haz.waste 3.c, 109.haz. waste.4, and 109.haz. waste.5, as amended October 20, 1994; effective October 20, 1994, §§ 105.D.33, 105.D.33.a, and 105.D.33.b, as amended September 20, 1994; effective September 20, 1994, § 105.D.33.C, as amended March 20, 1995; effective March 20, 1995, and §§ 109.haz. waste.6, 109.haz. waste.6.a, and 109.haz. waste.6.b, as amended October 20, 1994; effective October 20, 1994.

Federal citation	State analog
35. Toxicity Characteristic Revision, [57 FR 23062] June 1, 1992. (Checklist 117B).	LRS 30: 2180 et seq., as amended June 14, 1991, effective June 14, 1991; LHWR §§105.D.16, 105.D.19, and 4512.D.1, as amended March 230, 1995; effective March 20, 1995, and §109 haz.waste.2.a, as amended October 20, 1994; effective October 20, 1994.
36. Liquids in Landfills II, [57 FR 54452] November 18, 1992. (Checklist 118).	LRS 30: 2180 et seq., as amended June 14, 1991, effective June 14, 1991; LHWR §§1519.C.3, 2515.A.2, 2515.B, 2515. C.1.b, 2515.F, 2515.F.1, 2515.F.1.a, 2515.F.1.b–c, 2515.F.2, 2515.F.2.a–b, 2515.E, 2515.E.1–2, 2519.B–C, 4313.F.3, 4507.A.2, 4507.B, 4507.C.1.b, 4507.F, 4507.F.1, 4507.F.1.a–c, 4507.F.2, 4507.F.2.a–b, 4507.G, 4507.G.2, 4511.B, and 4511.C, as amended March 20, 1995; effective March 20, 1995.
37. Toxicity Characteristic Revision; TCLP, [57 FR 55114] November 24, 1992, and [58 FR 6854] February 2, 1993. (Checklists 119 and 119.1).	LRS 30: 2180 et seq., as amended June 14, 1991, effective June 14, 1991; LHWR §§Chapters 49, App.B,8.2, 49, App.B,8.2.2, 49, App.B,8.2.2.5, 49 App.B,8.2.2.5.1, 49, App.B,8.2.2.5.2, 49, App.B,8.2.2.5.3, 49, App.B,8.2.2.5.4, and 49, App.B.8.4, as amended September 20, 1995.
38. Wood Preserving; Amendments to Listings and Technical Requirements, [57 FR 61492] December 24, 1992. (Checklist 120).	LRS 30: 2180 et seq., as amended June 14, 1991, effective June 14, 1991; LHWR §4901.B. Table 1, as amended September 20, 1994; effective September 20, 1994, §105.D.44, as amended March 20, 1995; effective March 20, 1995, 4901.B.Table 1, as amended September 20, 1994; effective September 20, 1994, §2801.A, as amended December 20, 1992; effective December 20, 1992, §§2804, 2804.A–B, 2805.C.3, 2805.I, 2803.A, 2803.B, 2805.A.4, 4591, 2805 J, 2805.C, 2805.B, and 2805.C, as amended September 20, 1995; effective September 20, 1995.
39. Corrective Action Management Units and Temporary Units; Corrective Action Provisions Under Subtitle C, [58 FR 8658] February 16, 1993. (Checklist 121).	LRS 30:2180 et seq, as amended June 14, 1991, effective June 14, 1991; LHWR §§109, 109 ''landfills'', 109 ''misc. unit'', 109 ''remediation waste'', 4301.C, 3322.B, 2601.A, 2601.A.1–2, 2601.B.1, 2601.B.1.a–b, 2601.B.2, 2601.C, 2601.C.1–7, 2601.D, 2601.E, 2601.E.1–3, 2601.E.3.a–b, 2601.E.4, 2601.E.4a, 2601.e.4.a.i, 2601.E.4.a.ii, 2601.E.4.b, 2601.E.4.b.i–iii, 2601.E.4.c, 2601.E.4.c.i, ii, iii, iv, v, and vi, 2601.E.4.d, 2601.F, 2601.G, 2601.H, 2603.A–B, 2603.B.1–2, 2603.C, 2603.C.1–7, 2603 D, and 2603.E–G, as amended March 20, 1995, effective March 20, 1995, §109.Interim Status, as amended October 20, 1994; effective October 20, 1994, §§105, and 4301.A & C, as amended September 20, 1994; effective September 20, 1994, and §4307, as amended March 20, 1984; effective March 20, 1984.
40. Recycled Used Oil Management Standards; Technical Amendments and Corrections, [58 FR 26420] May 3, 1993, and [58 FR 33341] June 17, 1993. (Checklists 122 and 122.1).	LRS 30: 2180 et seq, as amended June 14, 1991, effective June 14, 1991; LHWR §§109 used oil, 109 haz. waste.2.e–e.ii, and 4105.C.3–C.4, as amended March 20, 1995; effective March 20, 1995, §4105.B.4, as amended September 20, 1994; effective September 20, 1994, §§4105.E, 3001.B.1, 4001, 4003–4003.B.2.c, 4003.C, 4003.D–D.2, 4003.E–E.4, 4003.F, 4003.G, 4003.H, 4003.I, 4005, 4005.Table 1, 4007.A, 4007.B, 4007.C–C.2.c, 4009.A–A.4, 4009.B–B.5, 40011.A, 4011.B., 4013–4013.D.4, 4015.A, 4015.B, 4015, 4017–C.3, 4019.A, 4019.B, 4021.A, 4021.B–B.2, 4023.A, 4023.B, 4025.A–A.4, 4025.B, 4025.C, 4025.D–D.5, 4027.A, 4027.B, 4029.A, 4029.B, 4083.B, 4031.A–A.4, 4031.B, 4031.C–C.5, 4033.A, 4033.B–B.2, 4033.C–C.2, 4033.D, 4035, 4035.A, 4035.B, 4035.C–C.2, 4035.D–D.2, 4035.E–F.2, 4035.G–G.2, 4035.H–H.4, 4037.A–B.5, 4037.C, 4037.D, 4039, 4041.A–A.2, 4041.B–B.5, 4043.A, 4043.B, 4045.A–A.5, 4045.A.6.a–A.6.B, 4045.b–b.6.i.VII, 4047.a, 4047.B–B.2, 4047.C–C.2, 4049–4049.H.2.b, 4051–4051.B.3, 4053.A–C, 4055–4055.B.3, 4057, 4059, 4061, 4061.A–A.2, 4061.B–B.5, 4061.C, 4063.A–B, 4065.A, 4065.A, 4067.A, 4067.B–B.3, 4067.C–D, 4071.A–B, 4073.A–B, 4075, 4079–4079.B, 4085.A–C, 4087.A–B, 4089, 4091.A, 4091.B, 4093, 105.D.46, 105.D.47, 1501.C.2, 105.D.4, 4001 ''used oil'', 4003.B.2, 4003.B.2.b, 4003.B.2.c, 4003.C, 4003.C.1, 4003.C.1.a, 4003.C.1.b, 4003.C.2., 4003.C.3, 4003.D.1, 4003.E.3.b, 4003.E.4., 4003.I, 4005.Table 1, note, 4007,C.3, 4011.A, 4013, 4015, 4015.A, 4015.B, 4015.C, 4025.A.4, 4025.D.4, 4029.A, 4029.B, 4031.B, 4031.B, 4035, 4035.D.1.b, 4035.D.1.c, 4043.A, 4045.B.6.h.iii, 4049, 4049.A, 4049.C.1.a, 4049.C.2, 4061.B.1, 4069–4069.G.4, 4077.A–C.4, 4081.A–B, 4083.A–B, and 4085.A, as amended March 20, 1995, effective March 20, 1995.

Louisiana is not authorized to operate the Federal program on Indian lands, This authority remains with EPA.

C. Decision

I conclude that Louisiana's application for program revision meets all of the statutory and regulatory requirements established by RCRA. Accordingly, Louisiana is granted final authorization to operate its hazardous waste program as revised. Louisiana now has responsibility for permitting treatment, storage, and disposal facilities within its borders and for carrying out the aspects of the RCRA program described in its revised program application, subject to the limitations of the Hazardous and Solid Waste Amendments. Louisiana also has primary enforcement responsibilities, although EPA retains the right to conduct inspections under section 3007 of RCRA and to take enforcement actions under sections 3008, 3013, and 7003 of RCRA.

D. Codification in Part 272

EPA uses 40 CFR part 272 for codification of the decision to authorize Louisiana's program and for incorporation by reference of those provisions of Louisiana's Statutes and regulations that EPA will enforce under sections 3008, 3013, and 7003 of RCRA. Therefore, EPA is reserving amendment of 40 CFR part 272, subpart T until a later date.

Compliance with Executive Order 12866

The Office of Management and Budget has exempted this rule from the requirements of section 3 of Executive Order 12866.

Certification Under the Regulatory Flexibility Act

Pursuant to the provisions of 4 U.S.C. 605(b), I hereby certify that this authorization will not have a significant economic impact on a substantial number of small entities. This authorization effectively suspends the applicability of certain Federal regulations in favor of Louisiana's program, thereby eliminating duplicative requirements for handlers of

hazardous waste in the State. This authorization does not impose any new burdens on small entities. This rule, therefore, does not require a regulatory flexibility analysis.

List of Subjects in 40 CFR Part 271

Environmental protection, Administrative practice and procedure, Confidential business information, Hazardous waste transportation, Hazardous waste, Indian lands, Intergovernmental relations, Penalties, Reporting and recordkeeping requirements, Water pollution control, Water supply.

Authority: This notice is issued under the authority of sections 2002(a), 3006, and 7004(b) of the Solid Waste Disposal Act as amended 42 U.S.C. 6912(a), 6926, 6974(b).

Dated: March 20, 1996.

Jane N. Saginaw,

Regional Administrator.

[FR Doc. 96–7604 Filed 3–27–96; 8:45 am]

BILLING CODE 6560–50–P

DEPARTMENT OF COMMERCE

National Oceanic and Atmospheric Administration

50 CFR Part 677

[Docket No. 960311066–6066–01; I.D. 030596C]

RIN 0648–AI67

North Pacific Fisheries Research Plan; Fee Refund

AGENCY: National Marine Fisheries Service (NMFS), National Oceanic and Atmospheric Administration (NOAA), Commerce.

ACTION: Interim final rule; request for comments.

SUMMARY: NMFS issues an interim final rule that will discontinue the 1995 North Pacific Fisheries Research Plan (Research Plan) fee collection process, authorize the issuance of annual Federal processor permits without regard to payment of Research Plan fees, and refund all fees collected (approximately $5.6 million) by NMFS under the Research Plan, along with accrued interest. A refund procedure is outlined that describes how Research Plan refund recipients will be identified, how the refunds will be calculated, and how and when refund checks will be disbursed. This action is necessary to respond to the North Pacific Fishery Management Council's (Council) vote at its December 1995 meeting to repeal the Research Plan. It is intended to terminate the collection of fees authorized by the Research Plan.

DATES: Effective March 25, 1996. Comments must be received on or before April 29, 1996, (See **ADDRESSES**).

ADDRESSES: Comments on the interim final rule may be sent to Ronald J. Berg, Chief, Fisheries Management Division, Alaska Region, NMFS, Room 453, 709 W. 9th Street, Juneau, AK 99801, or P.O. Box 21668, Juneau, AK 99802, Attention: Lori J. Gravel.

FOR FURTHER INFORMATION CONTACT: Kim S. Rivera, 907–586–7228.

SUPPLEMENTARY INFORMATION:

Background

A final rule implementing the Research Plan was published in the Federal Register on September 6, 1994 (59 FR 46126), under the authority of section 313 of the Magnuson Fishery Conservation and Management Act (Magnuson Act), as amended by section 404 of the High Seas Driftnet Fisheries Enforcement Act, Public Law 102–582. The Research Plan includes a fee collection program to pay for the costs of observer coverage for all fisheries under the Council's jurisdiction, except salmon fisheries. Full implementation of the Research Plan was delayed until 1997 (60 FR 66755, December 26, 1995) after the Council requested additional time to reconsider certain elements of the Research Plan that it had previously adopted. At its December 1995 meeting, the Council voted to repeal the Research Plan and its associated fee-based funding mechanism and requested NMFS to develop rulemaking for an alternative to the Research Plan and to refund the Research Plan fees collected in 1995.

As a result of the Council's action, NMFS intends to halt the administrative process necessary for full implementation of the Research Plan. This includes the billing of Research Plan fee assessments, collection of fee payments, and the requirement for Research Plan fees to be fully paid prior to issuance of Federal processor permits. Furthermore, NMFS will refund all monies, including accrued interest, deposited in the North Pacific Fishery Observer Fund (Observer Fund) to the processors that were billed and made direct payments to NMFS. Refund checks will be issued as soon as administratively possible.

Without the fee collection process in place, a justification for a semiannual Federal processor permit no longer exists. Therefore, the requirement is revised and the Federal processor permit will be issued annually.

In 1995, fee assessments were billed for the first four bimonthly billing periods and over $5.6 million was collected from Research Plan processors. Two more bimonthly fee assessments were scheduled to complete the 1995 billings. They will not be issued. Regulations at § 677.6(b) are revised to indicate that 1995 fee assessments were required only through August 31, 1995. To be consistent with the revised 1995 billing period, regulations at § 677.6(d) also are changed to indicate a January 1 through August 31, 1995, period.

Beginning in 1996, Federal processor permits will be issued for the entire calendar year rather than for a semiannual period. As a result, Federal processor permits issued in 1996 will be effective for the period January 1, 1996, through December 31, 1996. Regulations at § 677.4(b)(1) and (c)(1) will be revised to indicate that the Federal processor permits are issued annually and regulations at § 677.4(e) will be revised to indicate that the duration of an issued Federal processor permit is for the period January 1 through December 31. Issuance of Federal processor permits will not depend upon payment of past due Research Plan fees. Regulations at § 677.4(c)(2) are revised to remove language requiring payment of Research Plan fees as a condition of Federal processor permit issuance.

NMFS intends to refund in its entirety the $5.6 million collected under the Research Plan and the interest earned on fee payments deposited in the Observer Fund. Refunds will be issued to Research Plan processors using a procedure set forth in a new paragraph at § 677.6(g). Reference to refunds at § 677.6(d)(3)(ii) is no longer applicable and is removed.

NMFS collected fees only from processors. NMFS did not collect fees directly from fishermen and does not have the necessary information to provide refunds to fishermen. NMFS expects processors to refund to fishermen any Research Plan fees collected from fishermen. NMFS encourages fishermen who paid Research Plan fees to one or more processors to coordinate directly with those processors to obtain their portion of the Research Plan refund.

Classification

The Assistant Administrator for Fisheries, NOAA (AA) finds that relieving certain conditions specified at § 677.4(b)(1), (c), and (e) for processor permit issuance and at § 677.6 (b) and (d) for 1995 fee assessments removes a regulatory burden. Given that the Research Plan has not been fully

implemented and that the industry did not receive any observer services for their paid fees, NMFS should return all fees paid, including any interest accrued, and amounts for late payment as soon as possible. The AA finds good cause to waive the requirement to provide prior notice and the opportunity for public comment, pursuant to authority set forth at 5 U.S.C. 553(b)(B). To the extent that NMFS is returning Research Plan fees to those who are entitled to those fees, opportunity for comment is unnecessary. NMFS finds that it would be contrary to the public interest to delay these refunds further in order to provide prior notice and opportunity to comment on the procedural aspects of this rule. Such a delay may cause economic injury to persons entitled to a refund. Similarly, because this interim final rule relieves restrictions listed above, the AA finds that this rule, as authorized by 5 U.S.C. 553(d)(1), may be made effective upon filing for public inspection at the Office of the Federal Register. Comments must be received on or before April 29, 1996, (See **ADDRESSES**).

This rule contains collection-of-information requirements subject to the Paperwork Reduction Act. The collections of this information have been approved by the Office of Management and Budget, OMB control numbers 0648–0206 (Processor Permit Application) and 0648–0280 (dispute resolution process). The time estimate for documentation of disputed bills is 1 hr per response. This final rule relieves a reporting burden by changing the Federal processor permit application authorized under § 677.4 from a semiannual to an annual requirement. The annual application process will reduce by 50 percent the total burden hours associated with the issuance of Federal processor permits and result in an estimated total annual reporting burden equal to about 200 hours for an estimated 400 Research Plan processors who applied for a Federal processor permit to date in 1996.

No environmental consequences are anticipated beyond those already analyzed in the environmental assessment (EA) prepared for the Research Plan and therefore this interim final rule is categorically excluded from the requirement to prepare an EA in accordance with NAO 216–6.

This interim final rule has been determined to be not significant for purposes of E.O. 12866.

List of Subjects in 50 CFR Part 677

Fisheries, Reporting and recordkeeping requirements.

Dated: March 22, 1996.

Gary Matlock,

Program Management Officer, National Marine Fisheries Service

For the reasons set out in the preamble, 50 CFR part 677 is amended as follows:

PART 677—NORTH PACIFIC FISHERIES RESEARCH PLAN

1. The authority citation for 50 CFR part 677 continues to read as follows:

Authority: 16 U.S.C. 1801 *et seq.*

2. In § 677.4, paragraphs (b)(1), (c)(1), (c)(2), and (e) are revised to read as follows:

§ 677.4 Permits.

* * * * *

(b) * * *

(1) The year for which the permit is requested.

* * * * *

(c) *Issuance*. (1) Permits required under this section will be issued annually by the Regional Director.

(2) The Regional Director will issue a permit required under paragraph (a) of this section upon receipt of a complete application. Upon receipt of an incomplete or improperly completed application, the Regional Director will notify the applicant of the deficiency. No permit will be issued to an applicant until a complete application is submitted.

* * * * *

(e) *Duration*. The processor permit issued by the Regional Director will continue in full force and effect through December 31, of the year for which it is issued, or until it is revoked, suspended, or modified under part 621 (Civil Procedures) of this chapter.

* * * * *

3. In § 677.6, the heading to paragraph (b)(1) is revised, paragraph (b)(2) is revised, the heading for paragraph (d) is revised, paragraph (d)(3)(ii) is removed and reserved, and a new paragraph (g) is added to read as follows:

§ 677.6 Research Plan fee.

* * * * *

(b) * * *

(1) *Fee assessments applicable from January 1, 1995, through August 31, 1995.*

* * * * *

(2) *Fee assessments from September 1, 1995, through December 31, 1996.* Processors of Research Plan fisheries will not be assessed fees based on catch from Research Plan fisheries that is retained during the period September 1, 1995, through December 31, 1996.

* * * * *

(d) *Credit for observer coverage costs incurred from January 1, 1995, through August 31, 1995.*

* * * * *

(g) *Refund of the North Pacific Fishery Observer Fund (Observer Fund)*—(1) *General.* All monies in the Observer Fund will be refunded according to the refund procedure set out in paragraph (g)(2) of this section. The sum of all amounts refunded cannot exceed the amount available in the Observer Fund. The monies in the Observer Fund include: Fee assessment payments as specified in paragraph (c) of this section, assessed late charges in the form of interest and administrative charges for late payment of fee assessments as specified in paragraph (f) of this section, and accrued interest. Until the time of refund, monies will remain deposited in the Observer Fund earning interest. Without exception, full disbursement of the Observer Fund will occur to refund Research Plan processors. NMFS will not retain any funds either to reimburse programs for costs incurred to implement the Research Plan or to issue refunds.

(2) *Refund procedure*—(i) *Identification of the Research Plan refund recipient.* Research Plan fees will be refunded to the person who was billed and made payment to NMFS. The recipient of the refund and the refund amount will be based on Federal processor permit records and Research Plan billing with the following exceptions:

(A) If a refund recipient has died, the refund will be issued to the recipient's estate;

(B) If a refund recipient is a corporation and has gone bankrupt, successor-in-interest guidelines, as set forth in applicable state law, will be followed.

(ii) *Calculation of the refund amount*—(A) *Principal portion.* All payment amounts as assessed under paragraphs (c) and (f) of this section, and paid by processors, will be verified by NMFS in the Research Plan billing records and will constitute the principal portion of the refund.

(B) *Interest portion*—(*1*) *Basis of calculation and calculation formula.* The interest earned by the principal portion invested in the Observer Fund will be distributed among paying processors based on their proportional contribution to the Observer Fund. Contributions are based on two factors: The processor's total payment amount and the number of days the processor's total payment amount was on deposit. The interest portion of the refund will be calculated as follows:

(*i*) A processor's total payment amount multiplied by the number of days the processor's total payment amount was on deposit equals the processor's contribution (the number of days is based on the payment receipt date at the First National Bank of Chicago) (for example, if a processor's total payment amount was $20,000 and this amount was on deposit for 150 days, then the processor's contribution is $20,000 x 150 = $3,000,000);

(*ii*) A processor's contribution divided by the total amount of all processor contributions multiplied by 100 equals the processor's percent contribution to the Observer Fund [for example, if the total amount of all processor contributions is $750,000,000 ($5,000,000 x 150 days), then the processor's percent contribution is $3,000,000/$750,000,000 x 100 = 0.4%];

(*iii*) A processor's percent contribution multiplied by the total amount of interest earned by the Observer Fund equals the processor's interest portion of the Research Plan refund (for example, if the total amount of interest earned by the Observer Fund is $200,000, then the processor's interest portion of the Research Plan refund is 0.4% x $200,000 = $800).

(*2*) *Interest calculation method*. This method is necessary to ensure that the interest that is refunded does not exceed the interest amount that was earned and is available in the Observer Fund. Due to the administrative process used to invest the funds, certain delays existed between the date a processor made payment and the actual investment date. The date of payment is not the date the deposits were invested. Therefore, using the date of payment to calculate interest earned on an individual processor's payments will not accurately reflect the interest that was actually earned. NMFS has determined that the calculation specified in paragraph (g)(2)(ii)(B)(*1*) of this section is a fair and equitable way to distribute the interest earned on Observer Fund investments among the processors that made Research Plan payments.

(*3*) *Disinvestment of the Observer Fund*. The interest portion of the refund cannot be calculated until Observer Fund investments are withdrawn. Withdrawal of investments will occur just prior to the earliest possible issuance of refund checks in order to avoid unwarranted loss of interest. The actual amount of a processor's interest portion of the refund will be evident upon receipt of the refund check.

(iii) *Notification to processors of refund amounts*. NMFS will notify each processor by certified mail of a preliminary determination of the principal portion of the refund amount. The sum of the payment amounts received for each processor equals the principal portion of the Research Plan refund. Final determination of a processor's principal portion is subject to resolution of all disputes received under paragraph (g)(2)(iv) of this section. The notification letter to each processor will include the following itemized reference information:

(A) Payment amount received;

(B) Payment receipt date at the First National Bank of Chicago;

(C) Check number;

(D) Research Plan bill number to which the payment was applied, and;

(E) The fishery category to which the payment was applied.

(iv) *Dispute process*. A processor that disagrees with any determination of the principal portion of the refund amount as described in paragraph (g)(2)(ii)(A) of this section must sign the certified notification letter and return it to NMFS within 30 days of receipt of the certified letter, accompanied by documentation supporting the disputed principal portion of the refund amount.

(A) *NMFS review*. NMFS will review letters and documentation received under paragraph (g)(2)(iv); and

(B) *NMFS determination*—(*1*) If NMFS determines an error exists in the calculation of the principal portion of refund amounts, NMFS will correct such calculations and notify the affected processors of its determination; or

(*2*) If NMFS determines no error exists in the calculation of the principal portion of refund amounts, NMFS will notify the affected processors of its determination.

(v) *Disbursement of refund checks*. Once all disputes received under paragraph (g)(2)(iv) of this section have been resolved, NMFS will authorize and provide necessary documentation for refund checks to be disbursed by the United States Treasury.

[FR Doc. 96–7612 Filed 3–25–96; 4:31 pm]

BILLING CODE 3510–22–F

Proposed Rules

Federal Register
Vol. 61, No. 61
Thursday, March 28, 1996

This section of the FEDERAL REGISTER contains notices to the public of the proposed issuance of rules and regulations. The purpose of these notices is to give interested persons an opportunity to participate in the rule making prior to the adoption of the final rules.

DEPARTMENT OF TRANSPORTATION

Federal Aviation Administration

14 CFR Part 39

[Docket No. 94–NM–89–AD]

Airworthiness Directives; de Havilland Model DHC–8–100 and –300 Series Airplanes

AGENCY: Federal Aviation Administration, DOT.

ACTION: Supplemental notice of proposed rulemaking; reopening of comment period.

SUMMARY: This document revises an earlier proposed airworthiness directive (AD), applicable to certain de Havilland Model DHC–8–100 and –300 series airplanes, that would have required inspections to detect corrosion on areas of the airplane structure where black film thermal insulation is used; repair, if necessary; and replacement of black insulation blankets with certain aluminized (silver) insulation. That proposal was prompted by reports of corrosion forming on areas of the airplane structure where the black film covers the thermal insulation blankets. This action would expand the inspection area, and would require replacement of the black film insulation in that area. This action also would expand the applicability of the proposed AD to include additional airplanes. The actions specified by this proposed AD are intended to prevent degradation of the structural capability of the airplane fuselage and sudden loss of cabin pressure due to corrosion of the airplane fuselage structure.

DATES: Comments must be received by April 24, 1996.

ADDRESSES: Submit comments in triplicate to the Federal Aviation Administration (FAA), Transport Airplane Directorate, ANM–103, Attention: Rules Docket No. 94–NM–89–AD, 1601 Lind Avenue, SW., Renton, Washington 98055–4056. Comments may be inspected at this location between 9:00 a.m. and 3:00 p.m., Monday through Friday, except Federal holidays.

The service information referenced in the proposed rule may be obtained from Bombardier, Inc., Garratt Boulevard, Downsview, Ontario M3K 1Y5, Canada. This information may be examined at the FAA, Transport Airplane Directorate, 1601 Lind Avenue, SW., Renton, Washington; or at the FAA, Engine and Propeller Directorate, New York Aircraft Certification Office, 10 Fifth Street, Third Floor, Valley Stream, New York.

FOR FURTHER INFORMATION CONTACT: Jon Hjelm, Aerospace Engineer, Airframe Branch, ANE–172, FAA, Engine and Propeller Directorate, New York Aircraft Certification Office, 10 Fifth Street, Third Floor, Valley Stream, New York 11581; telephone (516) 256–7523; fax (516) 568–2716.

SUPPLEMENTARY INFORMATION:

Comments Invited

Interested persons are invited to participate in the making of the proposed rule by submitting such written data, views, or arguments as they may desire. Communications shall identify the Rules Docket number and be submitted in triplicate to the address specified above. All communications received on or before the closing date for comments, specified above, will be considered before taking action on the proposed rule. The proposals contained in this notice may be changed in light of the comments received.

Comments are specifically invited on the overall regulatory, economic, environmental, and energy aspects of the proposed rule. All comments submitted will be available, both before and after the closing date for comments, in the Rules Docket for examination by interested persons. A report summarizing each FAA-public contact concerned with the substance of this proposal will be filed in the Rules Docket.

Commenters wishing the FAA to acknowledge receipt of their comments submitted in response to this notice must submit a self-addressed, stamped postcard on which the following statement is made: ''Comments to Docket Number 94–NM–89–AD.'' The postcard will be date stamped and returned to the commenter.

Availability of NPRMs

Any person may obtain a copy of this NPRM by submitting a request to the FAA, Transport Airplane Directorate, ANM–103, Attention: Rules Docket No. 94–NM–89–AD, 1601 Lind Avenue, SW., Renton, Washington 98055–4056.

Discussion

A proposal to amend part 39 of the Federal Aviation Regulations (14 CFR part 39) to add an airworthiness directive (AD), applicable to certain de Havilland Model DHC–8–100 and –300 series airplanes, was published as a notice of proposed rulemaking (NPRM) in the Federal Register on September 27, 1994 (59 FR 49219). That NPRM would have required a one-time visual inspection to detect corrosion on areas of the airplane structure where black film thermal insulation is used, and repair, if necessary; and replacement of black Orcan film insulation blankets with AN4C aluminized (silver) film insulation. That NPRM was prompted by reports of corrosion forming on areas of the airplane structure where the black film covers the thermal insulation blankets. That condition, if not corrected, could result in degradation of the structural capability of the airplane fuselage and sudden loss of cabin pressure due to corrosion of the airplane fuselage structure.

Since the issuance of that NPRM, Bombardier has issued revisions to each of the service bulletins cited in the NPRM. These service bulletin revisions are essentially the same as those referenced in the proposed AD. However, in each of these revisions, the service bulletin effectivity has been updated to remove those airplanes on which silver insulation was installed during production. Further, references to existing part numbers, part descriptions, and new part numbers have been revised. Two of the service bulletin revisions address the black thermal insulation in the passenger compartment area:

- S.B. 8–25–89, Revision E, dated July 6, 1994; and
- S.B. 8–25–92, Revision E, dated July 20, 1994.

Two of the service bulletins address the insulation in the air conditioning ducts:

- S.B. 8–25–90, Revision C, dated July 5, 1994; and

• S.B. 8–25–93, Revision C, dated July 20, 1994.

One service bulletin revision addresses the insulation in the flight compartment and the forward fuselage areas: S.B. 8–25–91, Revision D, dated July 20, 1994.

Bombardier also issued Service Bulletin S.B. 8–21–68, dated July 20, 1994, which descries procedures to determine from the airplane modification records if any of the retrofit kits listed in the service bulletin have been installed on the airplane. The service bulletin also describes procedures for removal of the black Orcon film insulation that may have been installed in a retrofit kit; inspections for corrosion of the airplane structure that has been in contact with the black film insulation, and repair, if necessary; and replacement of the black Orcon film insulation with AN4C aluminized (silver) film insulation blankets. The effectivity of this service bulletin addresses airplanes on which the black insulation was installed through retrofit kits.

Additionally, Bombardier issued Service Bulletin S.B. 8–21–66, Revision C, dated March 24, 1995, which describes procedures for removal of the black Orcon film from delivery and recirculation ducts of the air conditioning system in the rear fuselage, inspections for corrosion of the airplane structure that has been in contact with the black film insulation, and repair, if necessary. The service bulletin also describes procedures for replacement of the black Orcon film insulation with AN4C aluminized (silver) film insulation.

Transport Canada Aviation, which is the airworthiness authority for Canada, classified these service bulletins as mandatory and issued Canadian airworthiness directives CF–94–25R1 and CF–94–26R1, both dated June 30, 1995, in order to assure the continued airworthiness of these airplanes in Canada.

The FAA has examined the findings of Transport Canada Aviation and has reviewed the service bulletin revisions and new service information. The FAA has determined that the proposed rule must be revised to cite the latest revisions of the service bulletins referenced in the NPRM as the appropriate sources of service information.

The FAA also has determined that the addressed unsafe condition is also likely to exist or develop on the airplanes addressed in Bombardier Service Bulletin S.B. 8–21–68. Therefore, the FAA has added a new paragraph (a) to this supplemental NPRM to require the procedures specified in that service bulletin.

Additionally, the FAA finds that the proposed rule must be revised to address inspection for corrosion and replacement of black Orcon film insulation with AN4C aluminized (silver) film insulation blankets in the delivery and recirculation ducts of the air condition system, as specified in Bombardier Service Bulletin S.B. 8–21–66. The FAA has revised paragraph (b) of this supplemental NPRM to include those requirements.

In addition, the applicability of this supplemental NPRM has been revised to specify that the AD applies to those airplanes on which black Orcon film insulation is installed to include airplanes listed in Bombardier Service Bulletins S.B. 8–21–66 and S.B. 8–21–68.

Since these changes expand the scope of the originally proposed rule, the FAA has determined that it is necessary to reopen the comment period to provide additional opportunity for public comment.

There are approximately 378 Model DHC–8–100 and -300 series airplanes of the affected design in the worldwide fleet. The FAA estimates that 125 airplanes of U.S. registry would be affected by this proposed AD, that it would take approximately 650 work hours per airplane to accomplish the proposed actions, and that the average labor rate is $60 per work hour. (Work hours associated with the proposed actions described in Service Bulletin S.B. 8–21–68 cannot be estimated at this time since exact numbers of the retrofit kits installed are unknown.) However, the FAA has been advised that the manufacturer plans to provide required parts and to accomplish the required modification at no expense to operators. Therefore, there is no cost impact to U.S. operators that is associated with this proposed rule with regard to labor charges or parts costs.

The FAA does recognize, however, that while operators may incur administrative costs associated with compliance to this proposed rule, the one-year compliance time specified in paragraphs (a) and (b) of this proposed AD should allow ample time for the proposed requirements to be accomplished coincidentally with scheduled major airplane inspection and maintenance activities, thereby minimizing the costs associated with special airplane scheduling.

The regulations proposed herein would not have substantial direct effects on the States, on the relationship between the national government and the States, or on the distribution of power and responsibilities among the various levels of government. Therefore, in accordance with Executive Order 12612, it is determined that this proposal would not have sufficient federalism implications to warrant the preparation of a Federalism Assessment.

For the reasons discussed above, I certify that this proposed regulation (1) is not a ''significant regulatory action'' under Executive Order 12866; (2) is not a ''significant rule'' under the DOT Regulatory Policies and Procedures (44 FR 11034, February 26, 1979); and (3) if promulgated, will not have a significant economic impact, positive or negative, on a substantial number of small entities under the criteria of the Regulatory Flexibility Act. A copy of the draft regulatory evaluation prepared for this action is contained in the Rules Docket. A copy of it may be obtained by contacting the Rules Docket at the location provided under the caption **ADDRESSES**.

List of Subjects in 14 CFR Part 39

Air transportation, Aircraft, Aviation safety, Safety.

The Proposed Amendment

Accordingly, pursuant to the authority delegated to me by the Administrator, the Federal Aviation Administration proposes to amend part 39 of the Federal Aviation Regulations (14 CFR part 39) as follows:

PART 39—AIRWORTHINESS DIRECTIVES

1. The authority citation for part 39 continues to read as follows:

Authority: 49 U.S.C. 106(g), 40113, 44701.

§ 39.13 [Amended]

2. Section 39.13 is amended by adding the following new airworthiness directive:

De Havilland, Inc.: Docket 94–NM–89–AD.

Applicability: Model DHC–8–100 and -300 series airplanes, equipped with black Orcon film insulation; certificated in any category; and listed in the following Bombardier Service Bulletins:

DHC–8 models	Service bulletin No.	Revision level	Date
102, 103, and 106	S.B. 8–25–89	E	July 6, 1994.
102, 103, and 106	S.B. 8–25–90	C	July 5, 1994.
102, 103, 106, 301, 311, and 314	S.B. 8–25–91	D	July 20, 1994.
301, 311, and 314	S.B. 8–25–92	E	July 20, 1994.
301, 311, and 314	S.B. 8–25–93	C	July 20, 1994.
102, 103, 106, 301, 311, and 314	S.B. 8–21–68		July 20, 1994.
102, 103, 301, 311, and 314	S.B. 8–21–66	C	March 24, 1995.

Note 1: This AD applies to each airplane identified in the preceding applicability provision, regardless of whether it has been otherwise modified, altered, or repaired in the area subject to the requirements of this AD. For airplanes that have been modified, altered, or repaired so that the performance of the requirements of this AD is affected, the owner/operator must request approval for an alternative method of compliance in accordance with paragraph (d) of this AD. The request should include an assessment of the effect of the modification, alteration, or repair on the unsafe condition addressed by this AD; and, if the unsafe condition has not been eliminated, the request should include specific proposed actions to address it.

Compliance: Required as indicated, unless accomplished previously.

To prevent degradation of the structural capability of the airplane fuselage and sudden loss of cabin pressure due to corrosion of the airplane fuselage structure, accomplish the following:

(a) For airplanes listed in Bombardier Service Bulletin S.B. 8–21–68, dated July 20, 1994: Within one year after the effective date of this AD, accomplish the requirements of paragraphs (a)(1), and (a)(2) of this AD.

(1) Determine from the airplane modification records if any of the retrofit kits listed in the service bulletin have been installed in the airplane, in accordance with the service bulletin.

(i) If no kit has been installed, no further action is required by this paragraph.

(ii) If any kit has been installed, prior to further flight, remove any black film insulation blanket, and perform a visual inspection to detect corrosion of all airplane structure in contact with the black insulation, in accordance with the service bulletin.

(A) If any corrosion is found that is within the limits specified in the service bulletin, prior to further flight, repair in accordance with the service bulletin.

(B) If any corrosion is found that is beyond the limits specified in the service bulletin, prior to further flight, repair in accordance with a method approved by the New York Aircraft Certification Office (ACO), ANE–170, FAA Engine and Propeller Directorate.

(2) Install the AN4C aluminized (silver) film insulation in accordance with the service bulletin.

(b) Within 1 year after the effective date of this AD, accomplish the requirements of paragraph (b)(1), (b)(2), and (b)(3) of this AD, in accordance with the following Bombardier service bulletin, as applicable:

S.B. 8–25–89, Revision E, dated July 6, 1994;
S.B. 8–25–90, Revision C, dated July 5, 1994;
S.B. 8–25–91, Revision D, dated July 20, 1994;
S.B. 8–25–92, Revision E, dated July 20, 1994;
S.B. 8–25–93, Revision C, dated July 20, 1994; and
S.B. 8–21–66, Revision C, dated March 24, 1995.

(1) Remove any black Orcon film insulation from the flight compartment and forward fuselage of the airplane, the passenger compartment, the air conditioning ducts, and the delivery and recirculation ducts of the air conditioning system in the rear fuselage, in accordance with the applicable service bulletin.

(2) Perform a visual inspection to detect corrosion of all airplane structure in contact with the black insulation, in accordance with the applicable service bulletin.

(i) If any corrosion is found that is within the limits specified in the service bulletin, prior to further flight, repair in accordance with the applicable service bulletin.

(ii) If any corrosion is found that is beyond the limits specified in the service bulletin, prior to further flight, repair in accordance with a method approved by the Manager, New York ACO.

(3) Install the AN4C aluminized (silver) film insulation in accordance with the applicable service bulletin.

(c) As of the effective date of this AD, no person shall install black Orcon film insulation, part number AN46B/AN36B, on any airplane.

(d) An alternative method of compliance or adjustment of the compliance time that provides an acceptable level of safety may be used if approved by the Manager, New York ACO. Operators shall submit their requests through an appropriate FAA Principal Maintenance Inspector, who may add comments and then send it to the Manager, New York ACO.

Note 2: Information concerning the existence of approved alternative methods of compliance with this AD, if any, may be obtained from the New York ACO.

(e) Special flight permits may be issued in accordance with sections 21.197 and 21.199 of the Federal Aviation Regulations (14 CFR 21.197 and 21.199) to operate the airplane to a location where the requirements of this AD can be accomplished.

Issued in Renton, Washington, on March 22, 1996.

Darrell M. Pederson,

Acting Manager, Transport Airplane Directorate, Aircraft Certification Service.

[FR Doc. 96–7550 Filed 3–27–96; 8:45 am]

BILLING CODE 4910–13–U

14 CFR Part 39

[Docket No. 95–NM–204–AD]

Airworthiness Directives; McDonnell Douglas Model DC–10–10 and –15 Series Airplanes

AGENCY: Federal Aviation Administration, DOT.

ACTION: Notice of proposed rulemaking (NPRM).

SUMMARY: This document proposes the adoption of a new airworthiness directive (AD) that is applicable to certain McDonnell Douglas Model DC–10–10 and –15 series airplanes. This proposal would require repetitive inspections to detect cracks in the bulkhead tee caps, and repair and follow-on actions, if necessary. The proposal would also provide for an optional terminating modification for the repetitive inspections. This proposal is prompted by reports of cracking in the bulkhead tee caps at a fuselage station in the area of certain longerons due to fatigue. The actions specified by the proposed AD are intended to prevent such fatigue cracking, which could result in loss of pressurization and damage to adjacent structure.

DATES: Comments must be received by May 21, 1996.

ADDRESSES: Submit comments in triplicate to the Federal Aviation Administration (FAA), Transport Airplane Directorate, ANM–103, Attention: Rules Docket No. 95–NM–204–AD, 1601 Lind Avenue, SW., Renton, Washington 98055–4056. Comments may be inspected at this location between 9:00 a.m. and 3:00 p.m., Monday through Friday, except Federal holidays.

The service information referenced in the proposed rule may be obtained from McDonnell Douglas Corporation, 3855 Lakewood Boulevard, Long Beach, California 90846, Attention: Technical Publications Business Administration, Department C1–L51 (2–60). This information may be examined at the FAA, Transport Airplane Directorate, 1601 Lind Avenue, SW., Renton, Washington.

FOR FURTHER INFORMATION CONTACT: Maureen Moreland, Aerospace Engineer, Systems and Equipment Branch, ANM–120L, FAA, Los Angeles Aircraft Certification Office, 3960 Paramount Boulevard, Lakewood, California 90712; telephone (310) 627–5238; fax (310) 627–5210.

SUPPLEMENTARY INFORMATION:

Comments Invited

Interested persons are invited to participate in the making of the proposed rule by submitting such written data, views, or arguments as they may desire. Communications shall identify the Rules Docket number and be submitted in triplicate to the address specified above. All communications received on or before the closing date for comments, specified above, will be considered before taking action on the proposed rule. The proposals contained in this notice may be changed in light of the comments received.

Comments are specifically invited on the overall regulatory, economic, environmental, and energy aspects of the proposed rule. All comments submitted will be available, both before and after the closing date for comments, in the Rules Docket for examination by interested persons. A report summarizing each FAA-public contact concerned with the substance of this proposal will be filed in the Rules Docket.

Commenters wishing the FAA to acknowledge receipt of their comments submitted in response to this notice must submit a self-addressed, stamped postcard on which the following statement is made: ''Comments to Docket Number 95–NM–204–AD.'' The postcard will be date stamped and returned to the commenter.

Availability of NPRMs

Any person may obtain a copy of this NPRM by submitting a request to the FAA, Transport Airplane Directorate, ANM–103, Attention: Rules Docket No. 95–NM–204–AD, 1601 Lind Avenue, SW., Renton, Washington 98055–4056.

Discussion

On November 6, 1995, the FAA issued AD 95–23–09, Amendment 39–9429 (60 FR 61649, December 1, 1995), which is applicable to McDonnell Douglas DC–10 series airplanes and Model KC–10A (military) airplanes. That AD requires the implementation of a Structural Inspection Document (SID) program of structural inspections to detect fatigue cracking, and repair or replacement, as necessary, to ensure the continued airworthiness of these airplanes as they approach the manufacturer's original fatigue design life goal. Among other requirements, AD 95–23–09 requires inspection of the bulkhead tee cap at station Y=1156.000 under the fleet leader operator sampling criteria. [The bulkhead tee cap at station Y=1156.000 is designated as Principal Structural Elements (PSE) 53.10.041B and 53.10.042B in McDonnell Douglas Report Number L26–012, ''DC–10 Supplemental Inspection Document,'' which is referenced in AD 95–23–09 as the appropriate source of service information.] The fatigue life threshold (N_{th}) for this PSE is 31,898 landings. The sampling period for this PSE started in September 1989, and will end in June 1996. Sampling inspections are to be accomplished within that interval for airplanes in the candidate fleet that have accumulated more than 15,949 total landings(N_{th}/2).

The FAA has received several reports of cracking in the bulkhead tee caps at fuselage station Y=1156.000 (left and right sides) in the area of longerons 38 and 41.0. The cracking was found on Model DC–10–10 and –15 series airplanes that had accumulated between 56,394 and 72,931 total flight hours and between 21,629 and 26,094 total landings. Investigation revealed that the cause of such cracking has been attributed to fatigue. The FAA has determined that additional inspections of this area will ensure that fatigue cracking is detected before it reaches a critical length. Fatigue cracking, if not detected and corrected in a timely manner, could result in loss of pressurization and damage to adjacent structure.

The FAA has reviewed and approved McDonnell Douglas Service Bulletin DC10–53–168, dated August 9, 1995. The service bulletin describes procedures for repetitive eddy current and radiographic inspections to detect cracks in the bulkhead tee caps (left and right sides) between longerons 38.0 and 41.0 at fuselage station Y=1156.000, and repair and follow-on actions (i.e., repetitive inspections), if necessary.

The service bulletin also describes an optional terminating preventative modification that would eliminate the need for the repetitive inspections. The modification includes cold working fastener holes and a follow-on inspection program. Accomplishment of the preventative modification will minimize the possibility of cracks developing in the subject area of the bulkhead tee cap.

Since an unsafe condition has been identified that is likely to exist or develop on other products of this same type design, the proposed AD would require repetitive eddy current and radiographic inspections to detect cracks in the bulkhead tee caps (left and right sides) between longerons 38.0 and 41.0 at fuselage station Y=1156.000, and repair and follow-on actions, if necessary. The proposed AD would provide for an optional terminating preventative modification that would constitute terminating action for the repetitive inspection requirements. The actions would be required to be accomplished in accordance with the service bulletin described previously.

Operators should note that, although the service bulletin specifies that the manufacturer may be contacted for disposition of certain repair conditions, this proposal would require the repair of those conditions to be accomplished in accordance with a method approved by the Manager of the Los Angeles Aircraft Certification Office, FAA, Transport Airplane Directorate.

There are approximately 133 McDonnell Douglas Model DC–10–10 and –15 series airplanes of the affected design in the worldwide fleet. The FAA estimates that 121 airplanes of U.S. registry would be affected by this proposed AD, that it would take approximately 3 work hours per airplane to accomplish the proposed actions, and that the average labor rate is $60 per work hour. Based on these figures, the cost impact of the proposed AD on U.S. operators is estimated to be $21,780, or $180 per airplane, per inspection cycle.

The cost impact figure discussed above is based on assumptions that no operator has yet accomplished any of the proposed requirements of this AD action, and that no operator would accomplish those actions in the future if this AD were not adopted.

The regulations proposed herein would not have substantial direct effects on the States, on the relationship between the national government and the States, or on the distribution of power and responsibilities among the various levels of government. Therefore, in accordance with Executive Order 12612, it is determined that this proposal would not have sufficient federalism implications to warrant the preparation of a Federalism Assessment.

For the reasons discussed above, I certify that this proposed regulation (1) is not a ''significant regulatory action'' under Executive Order 12866; (2) is not a ''significant rule'' under the DOT Regulatory Policies and Procedures (44 FR 11034, February 26, 1979); and (3) if promulgated, will not have a significant economic impact, positive or negative, on a substantial number of small entities under the criteria of the Regulatory Flexibility Act. A copy of the draft

regulatory evaluation prepared for this action is contained in the Rules Docket. A copy of it may be obtained by contacting the Rules Docket at the location provided under the caption **ADDRESSES.**

List of Subjects in 14 CFR Part 39

Air transportation, Aircraft, Aviation safety, Safety.

The Proposed Amendment

Accordingly, pursuant to the authority delegated to me by the Administrator, the Federal Aviation Administration proposes to amend part 39 of the Federal Aviation Regulations (14 CFR part 39) as follows:

PART 39—AIRWORTHINESS DIRECTIVES

1. The authority citation for part 39 continues to read as follows:

Authority: 49 U.S.C. 106(g), 40113, 44701.

§ 39.13 [Amended]

2. Section 39.13 is amended by adding the following new airworthiness directive:

McDonnell Douglas: Docket 95–NM–204–AD.

Applicability: Model DC–10–10 and –15 series airplanes, as listed in McDonnell Douglas Service Bulletin DC10–53–168, dated August 9, 1995; certificated in any category.

Note 1: This AD applies to each airplane identified in the preceding applicability provision, regardless of whether it has been otherwise modified, altered, or repaired in the area subject to the requirements of this AD. For airplanes that have been modified, altered, or repaired so that the performance of the requirements of this AD is affected, the owner/operator must request approval for an alternative method of compliance in accordance with paragraph (c) of this AD. The request should include an assessment of the effect of the modification, alteration, or repair on the unsafe condition addressed by this AD; and, if the unsafe condition has not been eliminated, the request should include specific proposed actions to address it.

Compliance: Required as indicated, unless accomplished previously. To prevent fatigue cracking, which could result in loss of pressurization and damage to adjacent structure, accomplish the following:

(a) Prior to the accumulation of 20,000 total landings, or within 1,500 landings after the effective date of this AD, whichever occurs later, perform an eddy current and radiographic inspection, as applicable, to detect cracks in the bulkhead tee caps (left and right sides) in the area of longerons 38.0 through 41.0 at fuselage station Y=1156.000, in accordance with McDonnell Douglas Service Bulletin DC10–53–168, dated August 9, 1995.

(1) If no cracks are detected, repeat the inspections thereafter at intervals not to exceed 2,600 landings until paragraph (b) of this AD is accomplished.

(2) If any crack is detected, prior to further flight, accomplish the repair specified in either paragraph (a)(2)(i) or (a)(2)(ii) of this AD.

(i) Splice in a new bulkhead tee cap section at cracked area of bulkhead tee cap in accordance with the service bulletin. Within 20,000 total landings after accomplishing this repair, perform eddy current inspections to detect cracks in accordance with the service bulletin. Repeat the inspections thereafter at intervals not to exceed 2,600 landings until paragraph (b) of this AD is accomplished. If any crack is detected, prior to further flight, repair it in accordance with a method approved by the Manager, Los Angeles Aircraft Certification Office (ACO), FAA, Transport Airplane Directorate.

(ii) Repair in accordance with a method approved by the Manager, Los Angeles ACO, FAA, Transport Airplane Directorate.

(b) Terminating action for the repetitive inspections required by paragraphs (a)(1) and (a)(2)(ii) of this AD is as follows:

(1) Accomplish the preventative modification and eddy current open hole inspection in accordance with Condition 1 (no cracks in bulkhead tee cap), Option 2, of the service bulletin. And

(2) Within 14,450 total landings following accomplishment of the modification, perform an eddy current and radiographic inspection to detect cracks in accordance with Condition 1 (no cracks in bulkhead tee cap), Option 2, of the service bulletin.

(i) If no cracks are detected, repeat the inspections thereafter at intervals not to exceed 3,950 landings.

(ii) If any crack is detected, prior to further flight, repair it in accordance with a method approved by the Manager, Los Angeles ACO, FAA, Transport Airplane Directorate.

(c) An alternative method of compliance or adjustment of the compliance time that provides an acceptable level of safety may be used if approved by the Manager, Los Angeles Aircraft Certification Office (ACO), FAA, Transport Airplane Directorate. Operators shall submit their requests through an appropriate FAA Principal Maintenance Inspector, who may add comments and then send it to the Manager, Los Angeles ACO.

Note 2: Information concerning the existence of approved alternative methods of compliance with this AD, if any, may be obtained from the Los Angeles ACO.

(d) Special flight permits may be issued in accordance with sections 21.197 and 21.199 of the Federal Aviation Regulations (14 CFR 21.197 and 21.199) to operate the airplane to a location where the requirements of this AD can be accomplished.

Issued in Renton, Washington, on March 22, 1996.

Darrell M. Pederson,

Acting Manager, Transport Airplane Directorate, Aircraft Certification Service.

[FR Doc. 96–7549 Filed 3–27–96; 8:45 am]

BILLING CODE 4910–13–P

14 CFR Part 39

[Docket No. 95–NM–208–AD]

Airworthiness Directives; Airbus Model A320–111, –211, and –231 Series Airplanes

AGENCY: Federal Aviation Administration, DOT.

ACTION: Notice of proposed rulemaking (NPRM).

SUMMARY: This document proposes the adoption of a new airworthiness directive (AD) that is applicable to certain Airbus Model A320–111, –211, and –231 series airplanes. This proposal would require repetitive high frequency eddy current inspections to detect cracks around the fasteners of the lower forward corners of the sliding window frames, and repair, if necessary. This proposal would also require installation of a modification for each affected fastener hole, which would terminate the repetitive inspections. This proposal is prompted by the results of full-scale fatigue tests which indicated that fatigue cracking occurred on the lower forward corner of the sliding window frames at frame 4. The actions specified by the proposed AD are intended to prevent such fatigue cracking, which could result in rapid depressurization of the airplane.

DATES: Comments must be received by May 6, 1996.

ADDRESSES: Submit comments in triplicate to the Federal Aviation Administration (FAA), Transport Airplane Directorate, ANM–103, Attention: Rules Docket No. 95–NM–208–AD, 1601 Lind Avenue, SW., Renton, Washington 98055–4056. Comments may be inspected at this location between 9:00 a.m. and 3:00 p.m., Monday through Friday, except Federal holidays.

The service information referenced in the proposed rule may be obtained from Airbus Industrie, 1 Rond Point Maurice Bellonte, 31707 Blagnac Cedex, France. This information may be examined at the FAA, Transport Airplane Directorate, 1601 Lind Avenue, SW., Renton, Washington.

FOR FURTHER INFORMATION CONTACT: Tim Backman, Aerospace Engineer, Standardization Branch, ANM–113, FAA, Transport Airplane Directorate, 1601 Lind Avenue, SW., Renton, Washington 98055–4056; telephone (206) 227–2797; fax (206) 227–1149.

SUPPLEMENTARY INFORMATION:

Comments Invited

Interested persons are invited to participate in the making of the

proposed rule by submitting such written data, views, or arguments as they may desire. Communications shall identify the Rules Docket number and be submitted in triplicate to the address specified above. All communications received on or before the closing date for comments, specified above, will be considered before taking action on the proposed rule. The proposals contained in this notice may be changed in light of the comments received.

Comments are specifically invited on the overall regulatory, economic, environmental, and energy aspects of the proposed rule. All comments submitted will be available, both before and after the closing date for comments, in the Rules Docket for examination by interested persons. A report summarizing each FAA-public contact concerned with the substance of this proposal will be filed in the Rules Docket.

Commenters wishing the FAA to acknowledge receipt of their comments submitted in response to this notice must submit a self-addressed, stamped postcard on which the following statement is made: ''Comments to Docket Number 95–NM–208–AD.'' The postcard will be date stamped and returned to the commenter.

Availability of NPRMs

Any person may obtain a copy of this NPRM by submitting a request to the FAA, Transport Airplane Directorate, ANM–103, Attention: Rules Docket No. 95–NM–208–AD, 1601 Lind Avenue, SW., Renton, Washington 98055–4056.

Discussion

The Direction Générale de l'Aviation Civile (DGAC), which is the airworthiness authority for France, recently notified the FAA that an unsafe condition may exist on certain Airbus Model A320–111, -211, and -231 series airplanes. The DGAC advises that, during full-scale fatigue tests on a Model A320 series airplane test article, fatigue cracking was found on the lower forward corner of the sliding window frames at frame 4. Fatigue cracking on the lower forward corner of the sliding window frames at frame 4, if not detected and corrected in a timely manner, could result in rapid depressurization of the airplane.

Airbus has issued Service Bulletin A320–53–1082, Revision 1, dated November 9, 1994, which describes procedures for a high frequency eddy current inspection to detect cracks around the five fasteners of the lower forward corners of the sliding window frames at frame 4. For cases where no cracks are detected during inspection, the service bulletin describes procedures for either conducting repetitive inspections, or installing Modification 23685P3199. The service bulletin also permits further flight with cracking around the five fasteners.

Airbus has also issued Service Bulletin A320–53–1044, dated February 8, 1994, which describes procedures for installation of Modification 23685P3199. The modification entails cold working each of the five fastener holes on each side and installing a tension bolt. Accomplishment of the modification on each of the 5 fasteners on each side would eliminate the need for the repetitive inspections.

The DGAC classified these service bulletins as mandatory and issued French airworthiness directive 94–166–056(B), dated July 20, 1994, in order to assure the continued airworthiness of these airplanes in France.

This airplane model is manufactured in France and is type certificated for operation in the United States under the provisions of section 21.29 of the Federal Aviation Regulations (14 CFR 21.29) and the applicable bilateral airworthiness agreement. Pursuant to this bilateral airworthiness agreement, the DGAC has kept the FAA informed of the situation described above. The FAA has examined the findings of the DGAC, reviewed all available information, and determined that AD action is necessary for products of this type design that are certificated for operation in the United States.

Since an unsafe condition has been identified that is likely to exist or develop on other airplanes of the same type design, the proposed AD would require high frequency eddy current inspection(s) to detect cracks around the 5 fasteners of the lower forward corners of the sliding window frames at frame 4. For cases where no cracks are detected during inspection, the proposed AD would require installation of Modification 23685P3199, which would constitute terminating action for the repetitive inspection requirements. The actions would be required to be accomplished in accordance with the procedures of the service bulletins described previously.

Operators should note that, unlike the procedures described in the referenced service bulletin, this proposed AD would not permit further flight with cracking detected around any of the 5 fasteners of the lower forward corner of the sliding window frame at frame 4. The FAA has determined that, due to the safety implications and consequences associated with such cracking, all cracks that are found must be repaired prior to further flight. The repair would be required to be accomplished in accordance with a method approved by the FAA.

The FAA estimates that 21 airplanes of U.S. registry would be affected by this proposed AD, that it would take approximately 5 work hours per airplane to accomplish the proposed actions, and that the average labor rate is $60 per work hour. Based on these figures, the cost impact of the proposed AD on U.S. operators is estimated to be $6,300, or $300 per airplane, per inspection cycle.

The cost impact figure discussed above is based on assumptions that no operator has yet accomplished any of the proposed requirements of this AD action, and that no operator would accomplish those actions in the future if this AD were not adopted.

The regulations proposed herein would not have substantial direct effects on the States, on the relationship between the national government and the States, or on the distribution of power and responsibilities among the various levels of government. Therefore, in accordance with Executive Order 12612, it is determined that this proposal would not have sufficient federalism implications to warrant the preparation of a Federalism Assessment.

For the reasons discussed above, I certify that this proposed regulation (1) is not a ''significant regulatory action'' under Executive Order 12866; (2) is not a ''significant rule'' under the DOT Regulatory Policies and Procedures (44 FR 11034, February 26, 1979); and (3) if promulgated, will not have a significant economic impact, positive or negative, on a substantial number of small entities under the criteria of the Regulatory Flexibility Act. A copy of the draft regulatory evaluation prepared for this action is contained in the Rules Docket. A copy of it may be obtained by contacting the Rules Docket at the location provided under the caption **ADDRESSES**.

List of Subjects in 14 CFR Part 39

Air transportation, Aircraft, Aviation safety, Safety.

The Proposed Amendment

Accordingly, pursuant to the authority delegated to me by the Administrator, the Federal Aviation Administration proposes to amend part 39 of the Federal Aviation Regulations (14 CFR part 39) as follows:

PART 39—AIRWORTHINESS DIRECTIVES

1. The authority citation for part 39 continues to read as follows:

Authority: 49 U.S.C. 106(g), 40113, 44701.

§ 39.13 [Amended]

2. Section 39.13 is amended by adding the following new airworthiness directive:

Airbus Industrie: Docket 95–NM–208–AD.

Applicability: Model A320–111, –211, and –231 series airplanes; manufacturer's serial numbers 002 through 008 inclusive, 010 through 014 inclusive, 016 through 078 inclusive, and 080 through 098 inclusive; certificated in any category.

Note 1: This AD applies to each airplane identified in the preceding applicability provision, regardless of whether it has been modified, altered, or repaired in the area subject to the requirements of this AD. For airplanes that have been modified, altered, or repaired so that the performance of the requirements of this AD are affected, the owner/operator must request approval for an alternative method of compliance in accordance with paragraph (c) of this AD. The request should include an assessment of the effect of the modification, alteration, or repair on the unsafe condition addressed by this AD; and, if the unsafe condition has not been eliminated, the request should include specific proposed actions to address it.

Compliance: Required as indicated, unless accomplished previously.

To prevent fatigue cracking on the lower forward corner of the sliding window frames at frame 4, which could result in rapid depressurization of the airplane, accomplish the following:

(a) Prior to the accumulation of 15,000 total landings, or 3 months after the effective date of this AD, whichever occurs first, perform a high frequency eddy current inspection to detect cracks around the 5 fasteners of the lower forward corners of the sliding window frames at frame 4, in accordance with the procedures of Airbus Service Bulletin A320–53–1082, Revision 1, dated November 9, 1994.

(1) If no cracks are detected, repeat the inspection thereafter at intervals not to exceed 15,000 landings.

(2) If any crack is detected, prior to further flight, repair it in accordance with a method approved by the Manager, Standardization Branch, ANM–113, FAA, Transport Airplane Directorate.

(b) Prior to the accumulation of 30,000 total landings, or 5 years after the effective date of this AD, whichever occurs later, accomplish Airbus Modification 23685P3199 for each fastener hole, in accordance with Airbus Service Bulletin A320–53–1044, dated February 8, 1994. Accomplishment of the modification constitutes terminating action for the repetitive inspection requirements of paragraph (a) of this AD.

(c) An alternative method of compliance or adjustment of the compliance time that provides an acceptable level of safety may be used if approved by the Manager, Standardization Branch, ANM–113. Operators shall submit their requests through an appropriate FAA Principal Maintenance Inspector, who may add comments and then send it to the Manager, Standardization Branch, ANM–113.

Note 2: Information concerning the existence of approved alternative methods of compliance with this AD, if any, may be obtained from the Standardization Branch, ANM–113.

(d) Special flight permits may be issued in accordance with sections 21.197 and 21.199 of the Federal Aviation Regulations (14 CFR 21.197 and 21.199) to operate the airplane to a location where the requirements of this AD can be accomplished.

Issued in Renton, Washington, on March 22, 1996.

Darrell M. Pederson,

Acting Manager, Transport Airplane Directorate, Aircraft Certification Service.

[FR Doc. 96–7548 Filed 3–27–96; 8:45 am]

BILLING CODE 4910–13–P

---

14 CFR Part 39

[Docket No. 95–NM–252–AD]

Airworthiness Directives; Fokker Model F28 Mark 0100 Series Airplanes

AGENCY: Federal Aviation Administration, DOT.

ACTION: Notice of proposed rulemaking (NPRM).

SUMMARY: This document proposes the adoption of a new airworthiness directive (AD) that is applicable to certain Fokker Model F28 Mark 0100 series airplanes. This proposal would require replacement of certain flexible oxygen hoses, located in the flight compartment gangway and in the consoles, with insulated hose assemblies. This proposal is prompted by reports of either insufficient or no clearance between these hoses and adjacent structure or electrical wiring. The actions specified by the proposed AD are intended to prevent chafing of the flexible oxygen hoses, which could result in an uncontrollable loss of oxygen from the flightcrew oxygen system, and could allow the presence of oxygen in areas where ignition is possible.

DATES: Comments must be received by May 6, 1996.

ADDRESSES: Submit comments in triplicate to the Federal Aviation Administration (FAA), Transport Airplane Directorate, ANM–103, Attention: Rules Docket No. 95–NM–252–AD, 1601 Lind Avenue, SW., Renton, Washington 98055–4056. Comments may be inspected at this location between 9:00 a.m. and 3:00 p.m., Monday through Friday, except Federal holidays.

The service information referenced in the proposed rule may be obtained from Fokker Aircraft USA, Inc., 1199 North Fairfax Street, Alexandria, Virginia 22314. This information may be examined at the FAA, Transport Airplane Directorate, 1601 Lind Avenue, SW., Renton, Washington.

FOR FURTHER INFORMATION CONTACT: Tim Dulin, Aerospace Engineer, Standardization Branch, ANM–113, FAA, Transport Airplane Directorate, 1601 Lind Avenue, SW., Renton, Washington 98055–4056; telephone (206) 227–2141; fax (206) 227–1149.

SUPPLEMENTARY INFORMATION:

Comments Invited

Interested persons are invited to participate in the making of the proposed rule by submitting such written data, views, or arguments as they may desire. Communications shall identify the Rules Docket number and be submitted in triplicate to the address specified above. All communications received on or before the closing date for comments, specified above, will be considered before taking action on the proposed rule. The proposals contained in this notice may be changed in light of the comments received.

Comments are specifically invited on the overall regulatory, economic, environmental, and energy aspects of the proposed rule. All comments submitted will be available, both before and after the closing date for comments, in the Rules Docket for examination by interested persons. A report summarizing each FAA-public contact concerned with the substance of this proposal will be filed in the Rules Docket.

Commenters wishing the FAA to acknowledge receipt of their comments submitted in response to this notice must submit a self-addressed, stamped postcard on which the following statement is made: ''Comments to Docket Number 95–NM–252–AD.'' The postcard will be date stamped and returned to the commenter.

Availability of NPRMs

Any person may obtain a copy of this NPRM by submitting a request to the FAA, Transport Airplane Directorate, ANM–103, Attention: Rules Docket No. 95–NM–252–AD, 1601 Lind Avenue, SW., Renton, Washington 98055–4056.

Discussion

The Rijksluchtvaartdienst (RLD), which is the airworthiness authority for the Netherlands, recently notified the FAA that an unsafe condition may exist on certain Fokker Model F28 Mark 0100 series airplanes. The RLD advises that it has received reports indicating that, on airplanes in production, no clearance was found to exist between the flexible

oxygen hose located in the flight compartment gangway and the adjacent electrical wiring. In addition, it was reported that no clearance was found between the flexible oxygen hoses installed in the left-hand (LH) and right-hand (RH) side consoles and the air conditioning ducts, and there was insufficient clearance between these hoses and the adjacent electrical wiring. These conditions, if not corrected, could result in chafing of the flexible oxygen hoses and the subsequent uncontrollable loss of oxygen from the flightcrew oxygen system. It also could result in the presence of oxygen in areas where ignition is possible.

Fokker has issued Service Bulletin SBF100–35–004, dated May 17, 1995, which describes procedures for replacement of the flexible oxygen hoses with insulated hose assemblies. The insulated hose assemblies are intended to prevent chafing and damage of the hoses. The RLD classified this service bulletin as mandatory and issued Dutch airworthiness directive BLA 1995–050 (A), dated May 31, 1995, in order to assure the continued airworthiness of these airplanes in the Netherlands.

This airplane model is manufactured in the Netherlands and is type certificated for operation in the United States under the provisions of section 21.29 of the Federal Aviation Regulations (14 CFR 21.29) and the applicable bilateral airworthiness agreement. Pursuant to this bilateral airworthiness agreement, the RLD has kept the FAA informed of the situation described above. The FAA has examined the findings of the RLD, reviewed all available information, and determined that AD action is necessary for products of this type design that are certificated for operation in the United States.

Since an unsafe condition has been identified that is likely to exist or develop on other airplanes of the same type design, the proposed AD would require replacement of flexible oxygen hoses with insulated hose assemblies. The actions would be required to be accomplished in accordance with the service bulletin described previously.

The FAA estimates that 21 airplanes of U.S. registry would be affected by this proposed AD, that it would take approximately 4 work hours per airplane to accomplish the proposed actions, and that the average labor rate is $60 per work hour. Required parts would cost approximately $1,376 per airplane. Based on these figures, the cost impact of the proposed AD on U.S. operators is estimated to be $33,936, or $1,616 per airplane.

The cost impact figure discussed above is based on assumptions that no operator has yet accomplished any of the proposed requirements of this AD action, and that no operator would accomplish those actions in the future if this AD were not adopted.

The regulations proposed herein would not have substantial direct effects on the States, on the relationship between the national government and the States, or on the distribution of power and responsibilities among the various levels of government. Therefore, in accordance with Executive Order 12612, it is determined that this proposal would not have sufficient federalism implications to warrant the preparation of a Federalism Assessment.

For the reasons discussed above, I certify that this proposed regulation (1) is not a ''significant regulatory action'' under Executive Order 12866; (2) is not a ''significant rule'' under the DOT Regulatory Policies and Procedures (44 FR 11034, February 26, 1979); and (3) if promulgated, will not have a significant economic impact, positive or negative, on a substantial number of small entities under the criteria of the Regulatory Flexibility Act. A copy of the draft regulatory evaluation prepared for this action is contained in the Rules Docket. A copy of it may be obtained by contacting the Rules Docket at the location provided under the caption **ADDRESSES.**

List of Subjects in 14 CFR Part 39

Air transportation, Aircraft, Aviation safety, Safety.

The Proposed Amendment

Accordingly, pursuant to the authority delegated to me by the Administrator, the Federal Aviation Administration proposes to amend part 39 of the Federal Aviation Regulations (14 CFR part 39) as follows:

PART 39—AIRWORTHINESS DIRECTIVES

1. The authority citation for part 39 continues to read as follows:

Authority: 49 U.S.C. 106(g), 40113, 44701.

§ 39.13 [Amended]

2. Section 39.13 is amended by adding the following new airworthiness directive:

Fokker: Docket 95–NM–252–AD.

Applicability: Model F28 Mark 0100 series airplanes, having serial numbers 11244 through 11321 inclusive, and 11323 through 11332 inclusive; certificated in any category.

Note 1: This AD applies to each airplane identified in the preceding applicability provision, regardless of whether it has been otherwise modified, altered, or repaired in the area subject to the requirements of this AD. For airplanes that have been modified, altered, or repaired so that the performance of the requirements of this AD is affected, the owner/operator must request approval for an alternative method of compliance in accordance with paragraph (c) of this AD. The request should include an assessment of the effect of the modification, alteration, or repair on the unsafe condition addressed by this AD; and, if the unsafe condition has not been eliminated, the request should include specific proposed actions to address it.

Compliance: Required as indicated, unless accomplished previously.

To prevent an uncontrollable loss of oxygen from the flightcrew oxygen system due to chafing of the flexible oxygen hoses, which could result in the presence of oxygen in areas where ignition is possible; accomplish the following:

(a) Within 12 months or 3,000 flight cycles after the effective date of this AD, whichever occurs first, replace the flexible oxygen hoses having part number (P/N) A66152–407, located in the left-hand (LH) and right-hand (RH) side consoles with insulated tube assemblies having P/N D66127–401; and replace the flexible oxygen assemblies having P/N A66152–417, located in the flight compartment gangway with insulated tube assemblies having P/N D66127–403; in accordance with Fokker Service Bulletin SBF100–35–004, dated May 17, 1995.

(b) As of the effective date of this AD, no person shall install a hose assembly with P/N A66152–417 or A66152–407, on any airplane.

(c) An alternative method of compliance or adjustment of the compliance time that provides an acceptable level of safety may be used if approved by the Manager, Standardization Branch, ANM–113, FAA, Transport Airplane Directorate. Operators shall submit their requests through an appropriate FAA Principal Maintenance Inspector, who may add comments and then send it to the Manager, Standardization Branch, ANM–113.

NOTE 2: Information concerning the existence of approved alternative methods of compliance with this AD, if any, may be obtained from the Standardization Branch, ANM–113.

(d) Special flight permits may be issued in accordance with sections 21.197 and 21.199 of the Federal Aviation Regulations (14 CFR 21.197 and 21.199) to operate the airplane to a location where the requirements of this AD can be accomplished.

Issued in Renton, Washington, on March 22, 1996.

Darrell M. Pederson,

Acting Manager, Transport Airplane Directorate, Aircraft Certification Service.

[FR Doc. 96–7547 Filed 3–27–96; 8:45 am]

BILLING CODE 4910–13–P

DEPARTMENT OF HEALTH AND HUMAN SERVICES

Food and Drug Administration

21 CFR Parts 314, 600, and 601

[Docket No. 95N–0329]

RIN 0910–AA57

Changes to An Approved Application; Proposed Rule and Draft Guidance Documents; Public Meeting

AGENCY: Food and Drug Administration, HHS.

ACTION: Proposed rule; notice of meeting.

SUMMARY: The Food and Drug Administration (FDA) is announcing a public meeting to discuss the proposed amendments to the biologics regulations for reporting changes to an approved application and corresponding drug regulations for submitting supplements for and reporting changes to an application for well-characterized biotechnology products. The purpose of the meeting is to solicit information and views on the agency's proposed rule addressing reporting of changes to an approved application as well as discuss the material and categories set forth in the closely related draft guidance documents.

DATES: The public meeting will be held on Friday, April 19, 1996, from 8 a.m. to 5 p.m. Submit written notices of participation, including a brief summary of the presentation and approximate time requested, by April 15, 1996. Written comments will be accepted until May 6, 1996.

ADDRESSES: The public meeting will be held at the National Institutes of Health, Bldg. 10, Masur Auditorium, 9000 Rockville Pike, Bethesda, MD. Attendance may be limited to 500, which is the capacity of the auditorium. Submit written notices of participation and comments to the Dockets Management Branch (HFA–305), Food and Drug Administration, 12420 Parklawn Dr., rm. 1–23, Rockville, MD 20857. FDA requests that persons who intend to participate notify the agency in advance. To expedite processing, written notices of participation may also be FAXED to 301–827–3843. Two copies of any comments are to be submitted, except that individuals may submit one copy. Comments are to be identified with the docket number found in brackets in the heading of this document. Transcripts of the meeting will be available for review at the Dockets Management Branch (address above).

FOR FURTHER INFORMATION CONTACT: For information regarding the meeting or to advise FDA of an intent to participate: Margaret A. Tart, Center for Biologics Evaluation and Research (HFM–42), Food and Drug Administration, 1401 Rockville Pike, Rockville, MD 20852–1448, 301–827–2000, FAX 301–827–3843.

For information regarding this document: Tracey H. Forfa, Center for Biologics Evaluation and Research (HFM–630), Food and Drug Administration, 1401 Rockville Pike, Rockville, MD 20852–1448, 301–594–3074.

SUPPLEMENTARY INFORMATION: In the Federal Register of January 29, 1996 (61 FR 2739), FDA announced its intent to hold a public meeting during the pendency of the comment period that ends on April 29, 1996, for the proposal to amend the biologics regulations for reporting changes to an approved application and corresponding drug regulations for submitting supplements for and reporting changes to an application for well-characterized biotechnology products (21 CFR 314.70 and 601.12). During this public meeting FDA is seeking comments on the proposed mechanisms for reporting changes to an approved application. Specifically, FDA is seeking comments on the three-category scheme for reporting changes in the product, production process, equipment, facilities, or responsible personnel. The three categories would include: (1) Supplement submission and approval prior to distribution of a product made using a proposed change that has a substantial potential to have an adverse effect on a product's safety, purity, potency, or effectiveness; (2) notification not less than 30 days prior to distributing a product made using a proposed change that has a moderate potential to have an adverse effect on a product's safety, purity, potency, or effectiveness; and (3) an annual report describing changes that have minimal potential to have an adverse effect on a product's safety, purity, potency, or effectiveness.

Further, FDA is asking for comment on the proposed three-category reporting system for biological product labeling changes. A change to a product package label, container label, or package label would require one of the following: (1) Submission of a supplement with FDA approval required prior to product distribution; (2) submission of a supplement with product distribution allowed prior to FDA approval; or (3) submission of the final printed label in an annual report. Promotional labeling and advertising would be required to be submitted under procedures found at 21 CFR 314.81(b)(3)(i).

In addition, FDA is seeking public comment on the draft guidance documents, ''Changes to An Approved Application; Draft Guidance'' and ''Draft Guidance; Changes to An Approved Application for Well-Characterized Therapeutic Recombinant DNA-Derived and Monoclonal Antibody Biotechnology Products,'' that were made available concurrently with the proposed rule in the Federal Register of January 29, 1996 (61 FR 2748 and 2749). FDA is seeking comments on the categorization of changes in the draft guidance documents and also on the utility of the guidance documents to applicants. FDA is not, however, intending to use this forum for additional discussion of the agency's definition of a well-characterized therapeutic recombinant DNA-derived and monoclonal antibody biotechnology product that was originally announced in the Federal Register of December 8, 1995 (60 FR 63048).

The procedures governing the meeting can be found in 21 CFR part 15. Prior to the meeting, FDA will determine the amount of time assigned to each person and the approximate scheduled time for each presentation. A schedule showing the persons making presentations will be filed with the Dockets Management Branch (address above), and mailed or FAXED to each presenter before the meeting. Interested persons attending the meeting who did not request an opportunity to make a presentation will be given the opportunity to make an oral presentation at the conclusion of the meeting, as time permits. However, no participant may interrupt the presentation of another participant.

Comments received at the public meeting and written comments submitted to the Dockets Management Branch (address above) by May 6, 1996, will be considered in the review of the proposed rule and guidance documents to determine whether revisions are warranted. After careful review of the public comments, FDA intends to revise the draft guidance documents, if necessary, and publish a final rule.

Dated: March 25, 1996.

William K. Hubbard,

Associate Commissioner for Policy Coordination.

[FR Doc. 96–7613 Filed 3–25–96; 4:06 pm]

BILLING CODE 4160–01–F

EQUAL EMPLOYMENT OPPORTUNITY COMMISSION

29 CFR Chapter XIV

Older Workers Benefit Protection Act of 1990 (OWBPA)

AGENCY: Equal Employment Opportunity Commission (EEOC).

ACTION: Fourth meeting of Negotiated Rulemaking Advisory Committee.

SUMMARY: EEOC announces the dates of the fourth meeting of the ''Negotiated Rulemaking Advisory Committee for Regulatory Guidance on Unsupervised Waivers of Rights and Claims under the Age Discrimination in Employment Act'' (the Committee). A Notice of Intent to form the Committee was published in the Federal Register on August 31, 1995, 60 FR 45388, and a Notice of Establishment of the Committee was published in the Federal Register on October 20, 1995, 60 F.R. 54207.

DATES: The fourth meeting will be held on April 16–17, 1996, beginning at 10:00 a.m. on April 16. It is anticipated that the meeting will last for two days. The session of April 17, 1996 will commence at 9:00 a.m.

ADDRESSES: The meeting will be held at the EEOC Headquarters, 1801 L Street, N.W., Washington, D.C. 20507.

FOR FURTHER INFORMATION CONTACT: Joseph N. Cleary, Paul E. Boymel, or John K. Light, ADEA Division, Office of Legal Counsel, EEOC, 1801 L Street, N.W., Washington, D.C. 20507, (202) 663–4692.

SUPPLEMENTARY INFORMATION: All Committee meetings, including the meeting of April 16–17, will be open to the public. Any member of the public may submit written comments for the Committee's consideration, and may be permitted to speak at the meeting if time permits. In addition, all Committee documents and minutes will be available for public inspection in EEOC's Library (6th floor of the EEOC Headquarters).

Persons who need assistance to review the comments will be provided with appropriate aids such as readers or print magnifiers. To schedule an appointment call (202) 663–4630 (voice), (202) 663–4630 (TDD). Copies of this notice are available in the following alternate formats: large print, braille, electronic file on computer disk, and audio tape. Copies may be obtained from the Office of Equal Employment Opportunity by calling (202) 663–4395 (voice), (202) 663–4399 (TDD).

Purpose of Meeting/Summary of Agenda

At the meeting, the Committee will continue to discuss the unsupervised waiver legal issues that will be considered by the Committee in drafting a recommended notice of proposed rulemaking for EEOC approval.

Dated: March 23, 1996.

Frances M. Hart,

Executive Officer.

[FR Doc. 96–7471 Filed 3–27–96; 8:45 am]

BILLING CODE 6570–06–M

ENVIRONMENTAL PROTECTION AGENCY

40 CFR Part 220 and 227

[FRL–5449–4]

RIN 2040–AC81

Extension of Time for Receipt of Comments on Proposed Rule on Testing Requirements for Ocean Dumping

AGENCY: Environmental Protection Agency (EPA).

ACTION: Extension of time for receipt of comments on proposed rule on testing requirements for ocean dumping.

SUMMARY: On February 29, 1996, EPA published a proposed rule at 61 FR 7765, clarifying certain provisions of the Agency's ocean dumping regulations relating to testing provisions of the regulations. The proposal stated that written comments on the proposed rule would be accepted until April 1, 1996. EPA has received several requests for an extension of time to comment on the proposed rule, on the grounds that several issues that the rule addresses require additional time for analysis. The Agency has determined that an extension of time is in the public interest, and that an additional 30 days to comment on the proposed rule is reasonable. Consequently, the period for receipt of comments on the proposed rule is extended until May 1, 1996.

DATES: The comment period is extended until May 1, 1996.

It should be noted that this extension of time for comment neither represents any modification of the proposed rule, nor indicates a change in the Agency's interpretation of the existing requirements under the ocean dumping regulations. The extension of time for receipt of comments simply provides those interested parties an additional 30 days to provide comments to the Agency on the proposed rule. All other requirements stipulated in the initial proposal for receipt of comments still apply.

FOR FURTHER INFORMATION CONTACT: John Lishman, Chief, Marine Pollution Control Branch, Oceans and Coastal Protection Division (4504F), Environmental Protection Agency, 401 M Street, SW, Washington, DC, 20460, telephone 202/260–8448.

Dated: March 22, 1996.

Robert Perciasepe,

Assistant Administrator.

[FR Doc. 96–7606 Filed 3–27–96; 8:45 am]

BILLING CODE 6560–50–P

40 CFR Part 300

[FRL–5447–7]

National Oil and Hazardous Substances Pollution Contingency Plan National Priorities List

AGENCY: Environmental Protection Agency (EPA).

ACTION: Notice of intent to delete Howe Valley Landfill Superfund Site, Hardin County, Kentucky, from the National Priorities List.

SUMMARY: The Environmental Protection Agency (EPA) Region 4 announces its intent to delete the Howe Valley Landfill Site (the Site) from the National Priorities List (NPL) and requests public comments on this proposed action. The NPL constitutes Appendix B of 40 CFR part 300 which is the National Oil and Hazardous Substances Contingency Plan (NCP), which EPA promulgated pursuant to section 105 of the Comprehensive Environmental Response, Compensation and Liability Act of 1980 (CERCLA), as amended. EPA and the Commonwealth of Kentucky have determined that the responsible parties have implemented all appropriate response actions required at the Site and therefore, further remedial measures pursuant to CERCLA are not appropriate.

DATES: Comments may be submitted by midnight April 30, 1996.

ADDRESSES: Comments may be mailed to: Nestor Young, Remedial Project Manager, North Superfund Remedial Branch, U.S. Environmental Protection Agency, Region 4, 345 Courtland Street, N.E., Atlanta, GA 30365.

Comprehensive information on this Site is available through the public docket which is available for viewing at the Howe Valley Landfill Site information repositories at the following locations:

Hardin County Public Library, 201 West Dixie Avenue, Elizabethtown, KY, 42701.

U.S. EPA Record Center, 345 Courtland Street, N.E., Atlanta, GA, 30365.

FOR FURTHER INFORMATION CONTACT: Nestor Young, U.S. EPA Region 4, 345 Courtland St., N.E., Atlanta, GA 30365, 404–347–3555 Ext. 2023 or 1–800–435–9233.

SUPPLEMENTARY INFORMATION:

I. Introduction

The Environmental Protection Agency (EPA) Region 4 announces its intent to delete the Howe Valley Landfill Site, Hardin County, Kentucky, from the National Priorities List (NPL), Appendix B of the National Oil and Hazardous Substances Pollution Contingency Plan (NCP), 40 CFR Part 300, and requests comments on its deletion. EPA identifies sites that appear to present a significant risk to public health, welfare, or the environment and maintains the NPL as the list of these sites. As described in § 300.425(e)(3) of the NCP, sites deleted from the NPL remain eligible for remedial actions in the unlikely event that conditions at the site warrant such action.

The EPA will accept comments on the proposal to delete this Site for thirty days after publication of this action in the Federal Register.

Section II of this notice explains the criteria for deleting sites from the NPL. Section III discusses the procedures that EPA is using for this action. Section IV discusses the Howe Valley Landfill Site and explains how the Site meets the deletion criteria.

II. NPL Deletion Criteria

Section 300.425(e) of the NCP provides that releases may be deleted from, or recategorized on the NPL where no further response is appropriate. In making a determination to delete a release from the NPL, EPA shall consider, in consultation with the state, whether any of the following criteria have been met:

(i) Responsible parties or other parties have implemented all appropriate response actions required;

(ii) All appropriate responses under CERCLA have been implemented, and no further action by responsible parties is appropriate; or

(iii) The remedial investigation has shown that the release poses no significant threat to public health or the environment and, therefore, taking of remedial measures is not appropriate.

Even if a site is deleted from the NPL, where hazardous substances, pollutants, or contaminants remain at the site above levels that allow for unlimited use and unrestricted exposure, EPA's policy is that a subsequent review of the site will be conducted at least every five years after the initiation of the remedial action at the site to ensure that the site remains protective of public health and the environment.

III. Deletion Procedures

The following procedures were used for the intended deletion of this site: (1) EPA Region 4 has recommended deletion and has prepared the relevant documents, (2) The Commonwealth of Kentucky has concurred with the deletion decision, (3) Concurrent with this Notice of Intent to Delete, a local notice has been published in local newspapers and has been distributed to appropriate federal, state and local officials, and other interested parties. This local notice announces a thirty (30) day public comment period, provides an address and telephone number for submission of comments, and identifies the location of the local site repository; and (4) Region 4 has made all relevant documents available in the Regional Office and local site information repository.

Deletion of the Site from the NPL does not itself create, alter, or revoke any individuals rights or obligations. The NPL is designed primarily for informational purposes and to assist Agency management. As mentioned in Section II of this document, § 300.425(e)(3) of the NCP states that the deletion of a site from the NPL does not preclude eligibility for future response actions.

For deletion of this Site, EPA Region 4 will accept and evaluate public comments on EPA's Notice of Intent to Delete before making a final decision to delete. If necessary, the Agency will prepare a Responsiveness Summary to address any significant public comments received.

A deletion occurs when the EPA Regional Administrator places a final action in the Federal Register. Generally, the NPL will reflect deletions in the final update following the Notice. Public notices and copies of the Responsiveness Summary will be made available to local residents by Region 4.

IV. Basis for Intended Site Deletion

The following site summary provides the Agency's rationale for the proposal to delete this Site from the NPL.

A. Site Background

The sparsely vegetated, eleven (11) acre Howe Valley Landfill Site is situated at the end of Tom Duvall Lane, approximately 1.4 miles south of State Road 86 near the towns of Cecilia and Vertrees, Kentucky. The nearest community to the site is the unincorporated area of Howe Valley.

B. History

Beginning in 1967, Kentucky Industrial Services, Inc. (KIS) used the Howe Valley Site as an industrial waste landfill. The landfill operated under the State-issued solid waste permit until June 1976, when the Site was formally closed.

Upon the State's request, EPA conducted a Preliminary Assessment (PA) and Site Investigation (SI). EPA found that between 2,000 and 5,000 drums were buried at the landfill, and confirmed that water flowed towards Linders Creek. EPA proposed the site for inclusion on the National Priorities List (NPL) in June 1986. The site was formally included on the NPL in July 1987.

Under an Administrative Order with EPA, two Potentially Responsible Parties (PRPS) agreed to conduct a Removal Action and a Remedial Investigation (RI)/Feasibility Study (FS). The Removal Action, performed in the summer of 1988, involved excavating a total of 9,150 full or partially filled drums; 1,621 empty drums; 6,000 small containers; and 3,000 cubic yards of non-containerized waste. All wastes and highly contaminated soils were sent off-site for permanent disposal at a Resource Conservation and Recovery Act (RCRA) approved landfill.

On September 28, 1990, EPA issued a Record of Decision (ROD) which selected a remedy for contaminated soil still remaining on-site. The major components of the remedy selected consisted of excavation and off-site disposal of contaminated soil from the outer area and, on-site treatment of contaminated soil from the central area.

The selected remedy included the following:

- Excavation and off-site disposal of contaminated soil containing elevated concentrations of inorganic compounds.
- Implementation of a bench-scale treatability study to insure that the selected aeration treatment (rototilling) will reduce organic concentrations to acceptable levels.
- Excavation and treatment of central area soil by aeration via rototilling.
- Five years of quarterly monitoring of Boutwell Spring and any additional springs or wells that lay along the groundwater conduit between the site and Boutwell Spring.
- Placement of deed restrictions to limit usage of the property and its associated groundwater.

Following issuance of the ROD in September 1990, EPA entered into negotiations with Dow Corning

Corporation (Dow) to conduct the final clean-up. An agreement between EPA and Dow was entered in the United States District Court on May 22, 1991.

Final cleanup actions were conducted between November 1991 and July 1994. On August 30, 1994, Dow's contractor submitted a Remedial Action Report signifying successful completion of the remedial activities. The report documents and discusses the work performed at the site. KDEP concurred with the Remedial Action Report. The work was completed at a cost of $2,928,681.

C. Characterization of Risk

Samples collected during the Removal and findings made in the RI/FS indicated unacceptable levels of contamination in subsurface soils, located in the central area and an outlying area of the site. Organic contaminants were concentrated primarily in the central area, and the outlying area contained only inorganic contaminants. In both these areas, the contaminants were located within the near-surface (1 to 2 feet deep) and subsurface (3 to 9 feet deep) of the Site.

At completion of the remedial action, confirmatory sampling verified that: (1) The ROD cleanup objectives were achieved, (2) all actions specified in the ROD were implemented, and (3) the Site no longer posed any threats to human health and the environment.

D. Operation and Maintenance

Since all of the contaminated soil was remediated, and quarterly monitoring of Boutwell Spring was terminated, no long term Operation and Maintenance (O&M) activities associated with the site are required.

E. Five-Year Review

EPA Region 4 has determined that the remedial action completed has attained the site remediation objectives outlined in the ROD and that no hazardous substances, pollutants, or contaminants remain on-site exceeding concentrations that will restrict unlimited use of the site or threaten human health through unlimited exposure. Therefore, a 5-year review of this site will not be required.

F. Explanation of Significant Differences

The remedy selected in the ROD was modified in two instances by issuance of an Explanation of Significant Differences (ESD). The first ESD was issued in March 1993. This ESD modified the remedy to include: removal of additional drums and contaminated material; identification of subsurface soils containing an organic liquid and development of a cleanup plan; and treatment of contaminated rainwater collected during the excavation.

The second ESD was issued in August 1995 and it was done primarily to eliminate the ROD requirement for 5 years of monitoring of Boutwell Spring and the requirement for deed restrictions. Both of these requirements were dropped due to the fact that the cleanup objectives in the ROD were met, and no hazardous substances, pollutants, or contaminants remained onsite that would restrict unlimited use of or exposure to the Site.

G. State Concurrence to Delete the Howe Valley Site

The Commonwealth of Kentucky concurred with the deletion of the Site by letter dated December 7, 1995. EPA, with concurrence of the Commonwealth of Kentucky, believes that the following criterion for deletion have been met: (1) Responsible parties have implemented all appropriate response actions required; and (2) No further response action by responsible parties is appropriate. Subsequently, EPA is proposing deletion of Howe Valley Landfill Site from the NPL. Documents supporting this action are available from the public docket.

Dated: March 14, 1996.

Phyllis P. Harris,

Acting Deputy Regional Administrator, U.S. EPA Region 4.

[FR Doc. 96–7602 Filed 3–27–96; 8:45 am]

BILLING CODE 6560–50–P

DEPARTMENT OF TRANSPORTATION

Coast Guard

46 CFR Part 14

[CGD 94–004]

RIN 2115–AE72

Electronic Records of Shipping Articles and Certificates of Discharge

AGENCY: Coast Guard, DOT.

ACTION: Notice of proposed rulemaking.

SUMMARY: The Coast Guard proposes to revise the way that information on the ''engagement'' (shipment) and discharge of merchant mariners is maintained and submitted and to accomplish editorial and other, slight changes throughout its governing rules. The revision is due to statutory amendments directing, in effect, that ship-operating companies (''shipping companies'') maintain shipping articles and certificates of discharge and that they electronically submit the information from them. Nevertheless, it should reduce by about 70 percent the companies' burden of preparing articles and certificates, should reduce proportionately the number of personnel manually entering data and manually filing documents for the Coast Guard, and is in keeping with the Administration's Reinventing Government initiatives.

DATES: Comments must be received on or before May 28, 1996.

ADDRESSES: Comments may be mailed to the Executive Secretary, Marine Safety Council (G–LRA, 3406) [CGD 94–004], U.S. Coast Guard Headquarters, 2100 Second Street SW, Washington, DC 20593–0001, or may be delivered to room 3406 at the same address between 8 a.m. and 3 p.m., Monday through Friday, except Federal holidays. The telephone number is (202) 267–1477.

The Executive Secretary maintains the public docket for this rulemaking. Comments will become part of this docket and will be available for inspection or copying at room 3406, U.S. Coast Guard Headquarters, between 8 a.m. and 3 p.m., Monday through Friday, except Federal holidays.

FOR FURTHER INFORMATION CONTACT: Mrs. Justine Bunnell, Marine Personnel Division, National Maritime Center, (703) 235–1951.

SUPPLEMENTARY INFORMATION

Request for Comments

The Coast Guard encourages interested persons to participate in this rulemaking by submitting written data, views, or arguments. Persons submitting comments should include their names addresses, identify this rulemaking [CGD 94–004] and the specific section of this proposal to which each comment applies, and give the reason for each comment. Please submit two copies of all comments and attachments in an unbound format, no larger than 8½ by 11 inches, suitable for copying and electronic filing. Persons wanting acknowledgment of receipt of comments should enclose stamped, self-addressed postcards or envelopes.

The Coast Guard will consider all comments received during the comment period. It may change this proposed rule in view of the comments.

The Coast Guard plans no public hearing. A person may lodge a request for a public hearing by writing to the Marine Safety Council at the address under **ADDRESSES**. The request should include the reasons why a hearing would be beneficial. If it determines that the opportunity for oral presentations will aid this rulemaking, the Coast Guard will hold a public hearing at a

time and place announced by a later notice in the Federal Register.

Background and Purpose

In 1937 the Coast Guard became custodian of the program for protection of merchant mariners (''mariners''). To ensure that mariners are employed of their own will, that they are properly paid for their service, and that their time in service is properly documented, they and the masters or other persons in charge of their vessels, or these persons' representatives, sign contracts, know as shipping articles (''articles''). (From this point forward in the preamble, ''masters'' will stand for all of those persons other than mariners.)

The content and form, respectively, of articles for foreign and intercoastal voyages appear at 46 U.S.C., § § 10302 and 10303, and 10304; the content of articles for coastwise voyages appears at 46 U.S.C. 10502, even as the form of these articles remains unspecified by statute; both the content and form of articles for voyages on the Great Lakes remain unspecified by statute. (Articles consist of three parts: (1) features of the voyage and of several reciprocal duties, clear down the caloric value of food served to each mariner daily; (2) particulars of engagement; and (3) particulars of discharge.) From 1937 usages or practices regarding articles have changed little. The same has been true regarding certificates of discharge.

When reporting for a foreign or intercoastal voyage—or for a coastwise voyage (including a voyage on the Great Lakes) aboard a vessel of 50 gross tons or more—the mariner presents to the master a valid merchant mariner's document (''MMD'') listing the mariner's qualifications. The master reviews the MMD, verifies the mariner's qualifications, and enters the information in the particulars of engagement (part 2 of the articles), then the master and the mariner sign the articles in the appropriate places.

When finishing a foreign or intercoastal voyage, the master enters the mariner's wages and date of discharge in the particulars of discharge (part 3 of the articles), then the master and the mariner sign the articles in the other appropriate places. The master completes the certificate of discharge in the appropriate place, then the master and the mariner sign it in the appropriate place. (The certificate indicates the mariner's name and identification number, the dates and places of shipment and discharge, the name and official number of the vessel, and the name of the shipping company.) If the mariner holds a continuous discharge book, the master also completes and signs it in the appropriate place. The master ensures that the entries in the continuous discharge book (if held), on the certificate, and in the two particulars are proper, corresponding entries.

The mariner keeps the continuous discharge book (if held). The mariner get the original of the certificate of discharge.

When leaving the vessel before the end of the voyage, the mariner closes out the contract otherwise. He or she and the master sign a ''mutual agreement'' as well as the particulars of discharge; the master notes in these particulars that the reason for the mariner's leaving is mutual agreement. The master completes and signs a certificate of discharge, then the mariner signs it. If the mariner holds a continuous discharge book, the master completes and signs it.

At the end of the voyage, after all mariners have signed the particulars of discharge and received their certificates of discharge, the shipping company sends the articles and signed copies of the certificates to the Coast Guard. The Coast Guard reviews the articles and certificates to ensure that they are complete and accurate. Next, it manually enters the data off the certificates into its own sea-service database and manually files the certificates in the mariners' records. Last, it manually files the articles (alphabetically, by name of vessel).

These usages or practices have prevailed for two generations. On December 20, 1993, however, Congress enacted Public Law 103–206, the Coast Guard Authorization Act for 1994. Title IV, § 411, of that Act added 46 U.S.C., sub-§§ 10302(d) and 10502(e), each to read in full:

> The owner, charterer, managing operator, master, or individual in charge shall maintain the shipping agreement [''articles''] and make [them] available to the [mariner].

It added 46 U.S.C. 10320 to read in full:

> The Secretary shall prescribe regulations requiring vessel owners to maintain records of [mariners] on matters of engagement, discharge, and service. A vessel owner shall make these records available to the [mariner] and the Coast Guard on request.

It added 46 U.S.C., § 10502(f), to read the same, except that it substituted ''shipping companies'' for ''vessel owners'':

> The Secretary shall prescribe regulations requiring shipping companies to maintain records of [mariners] on matters of engagement, discharge, and service. The shipping companies shall make these records available to the [mariner] and the Coast Guard on request.

It also raised the penalties in 46 U.S.C., §§ 10321(a) and 10508(b), from $500.00 to $5,000.00 for violating any provision of these chapters or regulations prescribed under these chapters.

The Coast Guard had proposed the legislation because of budgetary constraints leading to cuts in its workforce and of the advent of computerization. Shipping companies will now be responsible for keeping articles and signed copies of certificates of discharge. They will still be free to submit them traditionally—but will now be free to submit just the data from them electronically. Either way, the Coast Guard will now maintain its sea-service database electronically. The companies may develop their own software, use off-the-shelf software, or obtain software developed by the Coast Guard, to generate articles and certificates from existing records of personnel. Whichever of these three courses a particular company follows, the Coast Guard will provide standards that ensure compatibility for the electronic transfer of data from the company's system to the Coast Guard's sea-service database.

The primary purposes of this rule are to standardize the format of articles (for all voyages that require them), to eliminate redundant forms such as masters' reports of mariners shipped or discharged, to authorize persons acting as masters to initiate and sign articles and certificates of discharge, to confer on shipping companies the legal and practical ability to transfer sea-service data electronically to the Coast Guard, and in general to lighten recordkeeping and shift much of what little remains onto the companies. The secondary purposes of this rule are to publish new statutory penalties and to remove gender-based language. A welcome effect of it would be to clarify 46 CFR Part 14.

Discussion of Proposed Rule

There would persist four separate subparts. But they would present a logical flow of work, from the format of the articles to the transmittal and storage of finished articles and certificates of discharge.

New Subpart A (current Subpart 14.01)—General—would contain only the purposes of the rule, several addresses of the Coast Guard, and general doctrine on the disclosure and privacy of information held by the Coast Guard. It would remit treatment of shipping articles into new Subpart B.

New Subpart B (current Subpart 14.05)—Shipment of Merchant Mariners—would cover all voyages

requiring or electing articles rather than only foreign and intercoastal voyages.

New § 14.201, Voyages upon which shipping articles are required (current §§ 14.01–5 and 14.05–10(c), (d), and (e)) would state which voyages must have articles; abolish reference to the Master's Report of Seamen Shipped or Discharged, Form CG–735T, which is an obsolete form; and eliminate gender-based language. By abolishing reference to this form, § 14.213 would remove a non-statutory authority and would standardize articles on all voyages requiring them.

New § 14.203, Voyages upon which shipping articles are not required (current §§ 14.01–7 and 14.05–10(a)(1) through (5)), would contain only editorial changes.

New § 14.205, Production of credentials by merchant mariner signing shipping articles (current § 14.05–5), would eliminate gender-based language.

New § 14.207, Content and form of shipping articles (current § 14.05–1), would contain mainly editorial changes, but would elaborate the entries required in articles.

New § 14.209, Preparation of shipping articles at beginning of voyage (current § 14.05–3), would clarify that an individual other than the master may be in charge of the vessel and would require that the shipping company prepare a signed original, a signed copy, and an unsigned copy of them.

New § 14.211, Posting of copy of shipping articles (current § 14.05–2), would abolish reference to the Forecastle Card, Form CG–704.

New § 14.213, Report of shipment of merchant mariner (current § 14.05–10), would still treat the shipment of mariners but no longer their discharge and would abolish reference to the Master's Report of Seamen Shipped or Discharged, Form CG–735T, which is an obsolete form. By abolishing reference to this form, § 14.213 would comply with the statutory command, among others, to standardize articles on all voyages requiring them.

New Subpart C (current Subpart 14.10)—Discharge of Merchant Mariners—would cover discharges on all voyages requiring them.

New § 14.301, Paying off of merchant mariner during or after voyage upon which shipping articles are required (current § 14.05–7), would eliminate gender-based language.

New § 14.303, Discharge of fit merchant mariner in foreign port (current § 14.10–10), would eliminate gender-based language.

New § 14.305, Discharge of incapacitated merchant mariner in foreign port (current § 14.10–20), would shorten and tighten the current treatment as well as would eliminate gender-based language.

New § 14.307, Entries in continuous discharge book, (current § 14.10–1), would abolish reference to the Record of Entry in Continuous Discharge Book, Form CG–718E, which is an obsolete form.

New § 14.309, Entries on certificate of discharge (current § 14.10–5), would require the shipping company to maintain copies of certificates of discharge as well as would eliminate gender-based language.

New § 14.311, Entries in shipping articles at end of voyage (current § 14.05–15), would clarify the current contents as well as would eliminate gender-based language.

New § 14.313, Report of discharge of merchant mariner (current § 14.05–10), would perpetuate only the portion of the current section pertaining to the discharge of mariners and would authorize the electronic transmission of data to the Coast Guard.

New § 14.315, Storage of shipping articles and of certificates of discharge (current § 14.05–15), would guide shipping companies in the storage of articles and of certificates of discharge and establish procedures for when companies merge or go out of business.

Current Subpart 14.15—Disclosure of Information Regarding Shipments and Discharges of Merchant Mariners—would vanish as a distinct subpart. Its one section would become new § 14.105.

New Subpart D (current Subpart 14.20)—Oceanographic-Research Vessels—would, of course, govern oceanographic-research vessels.

New § 14.401, General (current § 14.20–1), would correct statutory cites as well as would eliminate gender-based language.

New § 14.403, Exemptions (current § 14.20–10), would correct statutory cites as well as would eliminate gender-based language.

New § 14.405, Procedures (current § 14.20–5), would contain only editorial changes.

New § 14.407, Reports (current § 14.20–15), would abolish reference to the Master's Report of Seamen Shipped or Discharged, Form CG–735T, which is an obsolete form, as well as would eliminate gender-based language.

Regulatory Evaluation

This proposed rule is not a significant regulatory action under section 3(f) of Executive Order 12866 and would not require an assessment of potential costs and benefits under section 6(a)(3) of that Order. It has not been reviewed by the Office of Management and Budget (OMB) under that Order. It is not significant under the regulatory policies and procedures of the Department of Transportation (DOT) [44 FR 11040 (February 26, 1979)]. Its economic impact would be so minimal, the Coast Guard expects, that a full Regulatory Evaluation under paragraph 10e of the regulatory policies and procedures of DOT is unnecessary.

Many shipping companies, for their own purposes and convenience, already maintain electronic records of employment, from which they can generate both articles and certificates of discharge. Until now they have had to generate both by writing or typing. Now they will be able to print both, when required, from the computer; transmit the data off the certificates directly to the Coast Guard, using the software developed by the Coast Guard if not software developed by themselves or bought off the shelf; and still provide original certificates to their mariners. Upgrades or enhancements to the software, and long-term support for it, may cost them $250 a year. But initial issue of it, and first-year support of it, will cost them nothing. And this new way of doing business will save them time, effort, and money—about $1 million a year. [Since most of these benefits accrue through new reductions of paperwork, the detailed account of them appears under *Collection of Information*, below.]

Small Entities

Under the Regulatory Flexibility Act [5 U.S.C. 601 *et seq.*], the Coast Guard must consider whether this proposed rule, if adopted, would have a significant economic impact on a substantial number of small entities. ''Small entities'' may include (1) small businesses and not-for-profit organizations that are independently owned and operated and are not dominant in their fields and (2) governmental jurisdictions with populations of less than 50,000,

Smaller shipping companies may lack the equipment necessary to prepare articles and certificates of discharge and to transmit the data from the certificates to the Coast Guard, electronically. But the Coast Guard would continue to accept copies of the certificates from these companies, by mail: They would not need to buy computers. This would let the Coast Guard maintain an accurate sea-service database receiving data from all companies required to submit them, by mail if not electronically.

Therefore, the Coast Guard certifies under 5 U.S.C. 605(b) that the rule, if adopted, would not have a significant

economic impact on a substantial number of small entities. If, however, you think that your business or organization qualifies as a small entity and that the rule would have a significant economic impact on it, please submit a comment (see **ADDRESS**) explaining why you think it qualifies and in what way and to what degree this rule would economically affect it.

Collection of Information

Under the Paperwork Reduction Act [44 U.S.C. 3501 *et seq.*], OMB reviews each proposed rule that contains a collection-of-information requirement, to determine whether the practical value of the information would be worth the burden imposed by its collection. Collection-of-information requirements include reporting, recordkeeping, notification, and other, similar requirements.

This proposed rule contains collection-of-information requirements in the following sections: 14.207, 14.209, 14.213, 14.301, 14.303, 14.305, 14.307, 14.309, 14.311, 14.313, 14.315, 14,405, and 14.407. The following particulars apply:

DOT No: 2115.

OMB Control Nos: 2115–0015 and 2115–0042.

Administration: U.S. Coast Guard.

Title: Electronic Records of Shipping Articles and Certificates of Discharge.

Need for Information: To protect merchant mariners by ensuring that records of their employment, wages, and next of kin are accurate and are available for their review.

Proposed Use of Information: To promote safety aboard domestic merchant vessels by ensuring that merchant mariners qualify by training and service for original or upgraded credentials; to maintain sea-service data toward retirement benefits; and to furnish those data in the many cases litigated over collisions, injuries, or asbestosis

Forms

Current

The regulated community—shipping companies and mariners—would be free to forgo the use of each of these records, in whole or in its current form: Forecastle Card, CG–704; Shipping Articles, CG–705A; Certificate of Discharge, CG–718A; Record of Entry, CG–718E; Continuous Discharge Book, CG–719A; and (although OMB did not renew authority for its use after February 1995) Master's Report of Seamen Shipped or Discharged, CG–735T.

Proposed

The regulated community would still have to deal with all of the data contained in these records, in some form: Shipping Articles, CG–705A; and Certificate of Discharge, CG–718A.

Respondents: The chief regulatory impact would fall on the medium and large shipping companies because they operate most of the vessels required to execute articles and certificates of discharge. They would continue to prepare, issue, and keep files of articles and of copies of certificates. They would make these files accessible to the Coast Guard and mariners upon request and would send—voyage by voyage, for the sea-service database of the Coast Guard—either copies of certificates, as they do now, though without articles, or data transmitted electronically from these files.

Frequency of Response: Articles and copies of certificates of discharges have been due after each voyage. Articles and certificates would still have to be prepared for each voyage. Data from certificates would still have to reach the Coast Guard after each voyage. But now these data could move by wire rather than by mail; no forms would need move, unless shipping companies chose not to avail themselves of the benefits of this proposed rule, until after a lag of ten years. The number and length of voyages depend on the companies.

Estimate of Total Burden:

Current

The master of each vessel prepares, by hand, large, antiquated articles and certificates of discharge. The shipping companies send these records to the Coast Guard. The Coast Guard enters, by hand, sea-service data into its database, and files originals of articles (alphabetically, by names of vessels) and copies of certificates in individual mariners' records. It leaves the copies in the records. But, after three years, it transfers articles to the Federal Records Center at Suitland, Maryland, which stores them for sixty years. And, after three years of inactivity, it transfers the records themselves to that Center, which again, stores them for sixty years.

Proposed

The master of each vessel would still prepare articles and certificates of discharge. The shipping company would retain the option of his or her preparing both forms manually and sending copies of certificates to the Coast Guard for entry into its sea-service database. But it would gain that of his or her preparing both forms electronically—on software developed by themselves or the Coast Guard, or bought from stock—and of transmitting the data from certificates electronically to the Coast Guard. The Coast Guard would maintain the record of sea service in its database for six years after the mariner's last activity—such as taking out an upgraded, renewed, modified, or duplicate license or MMD, or sailing—and then transfer its record, in whatever electronic form, to the Center.

The burden would decrease greatly for companies that already had, or that obtained, the capability of preparing articles and certificates electronically from their current records of employment. (They would no longer collect data more than once and could collect them however they chose.) It would decrease considerably even for companies lacking this capability. They would, while their masters continued preparing articles and certificates manually, need only to send copies of certificates to the Coast Guard voyage by voyage; even they would not need to send articles to the Coast Guard voyage by voyage. So both the cost of sending articles oftener than once a year and the cost of sending them at all during the first ten years would be eliminated for all companies: All would maintain files of articles and of copies of certificates for ten years; then they would send the articles to the Coast Guard, which would prepare the articles for storage at the Federal Records Center, and the shipping companies would destroy their copies of certificates, since the Coast Guard would hold the record in its database. The added burden on these would take the forms of allotting more storage space in their offices to maintain the articles for ten years and of, about one work week for one person per company per year after the first ten years, both packing the articles to send to the Coast Guard for further storage and destroying their copies of discharges. The Coast Guard invites comments on the size of this added burden (or of any other burden, whether or not anticipated here).

Average Burden-Hours for Each Respondent: Each year, shipping companies prepare about 8,000 articles with accompanying certificates of discharge; this costs them almost $1.43 million. Each year hereafter, they would still prepare about 8,000 articles with accompanying certificates; but this would cost them just about $0.43 million. The reason is the efficiency that this rule would bring. For each voyage, masters need about 2.5 hours to prepare the articles with accompanying certificates and send them. For each voyage hereafter, those able to file electronically would need about 0.5

hour to prepare the documents and 0.25 hour to file the data from them. The burden-hours would diminish by just about 70 percent.

Savings

For Respondents

The average salary for the staff to prepare the articles and certificates of discharge is $50 an hour. That staff could save 20,000 hours a year, though the exact figure would depend on two variables: the numbers and kinds of vessels and voyages; and the offsetting burden, in the eleventh and later years, of purging ten-year-old copies of certificates and packing and sending ten-year-old articles. The Coast Guard invites comments on the sizes of these two variables.

For Coast Guard

The Coast Guard would save in three ways: (1) on its own personnel, (2) on its contractors' personnel, and (3) on storage-space. (1) Although some shipping companies may continue to submit paper copies of certificates of discharge requiring the Coast Guard to continue entering data from some records, the Coast Guard would save 950 hours or $20,000 a year on its own personnel. (2) The Coast Guard has eliminated 10 ''positions'' and saved 19,000 hours and has lost $460,000 a year from its budget to support contractors' personnel. And (3) the Coast Guard would need 15 or 20 fewer cubic feet of storage-space a year over the next 15 years and so would save $7,500—at $500 a year over those years—on storage-space.

OMB has approved these requirements on paperwork under a separate submittal pursuant the Paperwork Reduction Act [44 U.S.C. 3501 *et seq.*]. Persons submitting comments on the requirements should submit their comments both to OMB and to the Coast Guard where indicated under **ADDRESS.**

Federalism

The Coast Guard has analyzed this proposed rule under the principles and criteria contained in Executive Order 12612 and has determined that the rule would not have sufficient implications for federalism to warrant the preparation of a Federalism Assessment.

Environment

The Coast Guard has considered the environmental impact of this proposed rule and concluded that, under paragraph 2.B.2 of Commandant Instruction M16475.1B, the rule is categorically excluded from further environmental documentation. Subparagraphs 2.B.2.e.(34) (a) and (c) of that Instruction exclude, respectively, regulations that are editorial or procedural and those that concern maritime personnel. A Determination of Categorical Exclusion is available in the docket for inspection or copying where indicated under **ADDRESS.**

List of Subjects in 46 CFR Part 14

Oceanographic research vessels, Reporting and recordkeeping requirements, Seamen [Merchant mariners].

For the reasons set out in the preamble, the Coast Guard proposes to revise 46 CFR Part 14 to read as follows:

PART 14—SHIPMENT AND DISCHARGE OF MERCHANT MARINERS

Subpart A—General

14.101 Purpose of part.
14.103 Addresses of Coast Guard.
14.105 Disclosure and privacy.

Subpart B—Shipment of Merchant Mariners

14.201 Voyages upon which shipping articles are required.
14.203 Voyages upon which shipping articles are not required.
14.205 Production of credentials by merchant mariner signing shipping articles.
14.207 Content and form of shipping articles.
14.209 Preparation of shipping articles at beginning of voyage.
14.211 Posting of copy of shipping articles.
14.213 Report of shipment of merchant mariner.

Subpart C—Discharge of Merchant Mariners

14.301 Paying off of merchant mariner during or after voyage upon which shipping articles are required.
14.303 Discharge of merchant mariner in foreign port.
14.305 Discharge of merchant mariner in foreign port with appearance before consul.
14.307 Entries in continuous discharge book.
14.309 Entries on certificate of discharge.
14.311 Entries in shipping articles at end of voyage.
14.313 Report of discharge of merchant mariner.
14.315 Storage of shipping articles and of certificates of discharge.

Subpart D—Oceanographic-Research Vessels

14.401 General.
14.403 Exemptions.
14.405 Procedures.
14.407 Reports.

Authority: 5 U.S.C. 552; 46 U.S.C. Chapters 103 and 105.

Subpart A—General

§ 14.101 Purpose of part.

Part 14 prescribes rules for the shipment and discharge of merchant mariners aboard certain vessels of the United States.

§ 14.103 Addresses of Coast Guard.

(a) By mail: National Maritime Center (NMC–4A), U.S. Coast Guard, Suite 510, 4200 Wilson Boulevard, Arlington, VA 22203–1804

(b) By facsimile: 703–235–1062

§ 14.105 Disclosure and privacy.

The Coast Guard makes information available to the public in accordance with 49 CFR Part 7, including Appendix B.

Subpart B—Shipment of Merchant Mariners

§ 14.201 Voyages upon which shipping articles are required.

(a) Before proceeding either upon a foreign, intercoastal, or coastwise voyage (including a voyage on the Great Lakes) listed in paragraph (b) of this section or with the engagement or replacement of a merchant mariner for such a voyage, each master or individual in charge of a vessel of the United States shall execute shipping articles however prepared, manually or electronically. The master or individual in charge and each mariner engaged or replaced shall sign the the articles.

(b) Except as provided by § 14.203 of this part, articles are required upon each voyage by a vessel of the United States—

(1) Of 100 tons or more, from a port in the United States to any foreign port other than a port in—

(i) Canada;

(ii) Mexico; or

(iii) The West Indies;

(2) Of 75 gross tons or more, between a port of the United States on the Atlantic Ocean and a port of the United States on the Pacific Coast; or

(3) Of 50 gross tons or more, between a port in one State and a port in another State other than an adjoining State.

§ 14.203 Voyages upon which shipping articles are not required.

Although they may be used for the voyage, shipping articles are not required for any voyage by—

(a) A yacht;

(b) A vessel engaged exclusively in fishing or whaling;

(c) A vessel aboard which the merchant mariners are by custom or agreement entitled to participate in the profits or results of a cruise or voyage;

(d) A vessel employed exclusively in trade on the navigable rivers of the United States;

(e) A ferry, or a tug used in ferrying, if the vessel is employed exclusively in trade on the Great Lakes, other lakes, bays, sounds, bayous, canals, or harbors; or

(f) An unrigged vessel other than a seagoing barge.

§ 14.205 Production of credentials by merchant mariner signing shipping articles.

On engagement for a voyage upon which shipping articles are required, each merchant mariner shall present to the master or individual in charge of the vessel every document, certificate, or license required by law for the service the mariner would perform.

§ 14.207 Content and form of shipping articles.

(a) (1) The content and form of shipping articles for each vessel of the United States of 100 gross tons or more upon a foreign or intercoastal voyage must conform to 46 U.S.C., §§ 10302, 10303, 10304, and 10305. The articles must identify the nature of the voyage and specify at least the name, the number of the license or merchant mariner's document, the capacity of service, the time due on board to begin work, and the name and address of the next of kin of, and the wages due to, each merchant mariner, either who was discharged or whose services were otherwise terminated during the month.

(2) The content and form of articles for each such vessel upon a coastwise voyage (including a voyage on the Great Lakes) must conform to 46 U.S.C. 10502. The articles must specify at least the matter identified by paragraph (a)(1) of this section, except that they must not specify the wages due to the mariner.

(b) Any shipping company that manually prepares the articles may, upon request, obtain Shipping Articles, Form CG–705A, from any Officer in Charge, Marine Inspection (OCMI), of the Coast Guard.

(c) Any company that electronically prepares the articles may, upon request submitted to either address in § 14.103, obtain a copy of software developed by the Coast Guard to produce articles in the proper format. Alternatively, a company may develop its own software or buy it off the shelf; but, in either of these cases, it must secure approval of the software from the National Maritime Center at either address in § 14.103 of this part.

§ 14.209 Preparation of shipping articles at beginning of voyage.

Each master or individual in charge of a vessel when shipping articles are required shall prepare an original and two copies of the articles. The original and one copy must be signed by the master or individual in charge and by each merchant mariner under his or her command; but the second copy must not be signed by any of them.

§ 14.211 Posting of copy of shipping articles.

On commencement of a foreign, intercoastal, or coastwise voyage (including a voyage on the Great Lakes), each master or individual in charge of a vessel when shipping articles are required shall ensure that a legible copy of the articles, unsigned, is posted at a place accessible to the crew.

§ 14.213 Report of shipment of merchant mariner.

(a) When a vessel of the United States sails upon a foreign, intercoastal, or coastwise voyage (excluding a voyage on the Great Lakes), each master or individual in charge shall, at the commencement of the voyage, send one copy of shipping articles, signed by himself or herself and by each merchant mariner under his or her command, to the owner, charterer, or managing operator. He or she shall keep the original throughout the voyage and enter in it all changes made to the crew during the voyage.

(b)(1) When a vessel of the United States sails exclusively on the Great Lakes, each master or individual in charge shall, at the commencement of the season, or once the vessel is put into service, whichever occurs earlier, send one copy of articles, signed by himself or herself and by each mariner under his or her command, to the owner, charterer, or managing operator.

(2) The master or individual in charge shall send supplementary particulars of engagement covering each mariner engaged during the month, signed by himself or herself and by each mariner under his or her command, to the owner, charterer, or managing operator.

(3) The master or individual in charge shall, at the close of the season, or once the vessel is withdrawn from service, whichever occurs later, send articles, signed by himself or herself and by each mariner under his or her command, to the owner, charterer, or managing operator.

(c) When a vessel of the United States sails exclusively on bays or sounds, each master or individual in charge shall, on the last day of each calendar month, send articles, signed by himself or herself and by each mariner under his or her command, to the owner, charterer, or managing operator.

(d) Any person who fails to comply with the requirements of this section is subject to a civil penalty of $5,000.

Subpart C—Discharge of Merchant Mariners

§ 14.301 Paying off of merchant mariner during or after voyage upon which shipping articles are required.

Each master or individual in charge of a vessel when shipping articles are required shall complete and sign, and each merchant mariner paid off during or after such a voyage shall sign, the articles and otherwise comply with the requirements of this subpart. When signed by the master or individual in charge and by the mariner, the articles constitute a release from the duties to which they bound their parties.

§ 14.303 Discharge of merchant mariner in foreign port.

Except as provided by § 14.305 of this part, in a foreign port where a United States consul or his or her representative (''consul'') is available, each master or individual in charge of a vessel from which a merchant mariner is being discharged in that port and each mariner being discharged in that port shall sign the shipping articles and the certificate of discharge in the presence of the consul.

§ 14.305 Discharge of merchant mariner in foreign port without appearance before consul.

(a) In a foreign port where a United States consul or his or her representative (''consul'') is available, the consul may waive the appearance before the consul of—

(1) Any master or individual in charge of a vessel, if the consul finds that he or she cannot accompany the merchant mariner to the consul without placing the crew, the vessel, or the cargo at risk by his or her absence; or

(2) Any mariner being discharged in that port, if the consul find that the mariner cannot accompany the master or individual in charge to the consul without placing himself or herself at risk.

(b) If the consul waives the personal appearance of either the master or individual in charge or the mariner, the master or individual in charge shall, as the case may be, send or give the consul—

(1) A written statement showing the name and official number of the vessel, the name of the shipping company, and the type of voyage; the name, the social-security number, the capacity of service, the date and place of engagement, and the date and place of discharge of the mariner; and the reasons why the

mariner is being discharged and why, as the case may be, the master or individual in charge or the mariner cannot appear before the consul;

(2) An account of the wages due the mariner; and

(3) Either the funds to pay the wages or the commitment of the company to pay.

(c) If the consul deems the statement, the account, and the funds or the commitment satisfactory, the consul may discharge the mariner as if both the master or individual in charge and the mariner had appeared before him or her.

(d) If the consul deems the statement, the account, or the funds or the commitment unsatisfactory, the consul may decline to discharge the mariner—and may order the return of him or her to the vessel at the expense of the vessel, so long as the return will cause no harm to the mariner, the crew, the vessel, or the cargo.

(e) When an incapacitated merchant mariner cannot sign the shipping articles, the certificate of discharge, or any other form (including a Mutual Release, Form CG–713A) on leaving the vessel, the master or individual in charge of the vessel shall complete the master's part of the form and place the form with the mariner.

§ 14.307 Entries in continuous discharge book.

If a merchant mariner holds a continuous discharge book, the master or individual in charge of the vessel shall make the proper entries in it.

§ 14.309 Entries on certificate of discharge.

(a) Each master or individual in charge of a vessel shall, for each merchant mariner being discharged from the vessel, prepare a certificate of discharge and two copies—whether by writing or typing them on the prescribed form with permanent ink or generating them from computer in the prescribed format—and shall sign them with permanent ink.

(b) Each mariner being discharged shall sign the certificate and both copies with permanent ink.

(c) When the mariner leaves the vessel, the master or individual in charge shall give the certificate to the mariner.

(d) Except as directed by § 14.315 of this part, the shipping company shall keep both copies of the certificate.

§ 14.311 Entries in shipping articles at end of voyage.

(a) At the end of each voyage upon which shipping articles are required, the master or individual in charge of the vessel shall—

(1) Complete the articles, conforming the pertinent entries in them to those on the certificate of discharge and its copies;

(2) Note in the articles the execution of each Mutual Release;

(3) Attach to the articles each Mutual Release and a copy of each certificate; and

(4) Pay to each merchant mariner all wages due.

(b) When he or she is paid off, each mariner shall sign the articles.

§ 14.313 Report of discharge of merchant mariner.

At the end of each foreign, intercoastal, or coastwise voyage by a vessel of the United States, or of each voyage by such a vessel that sails exclusively on bays or sounds (or by such a vessel at the close of the season on the Great Lakes, or once the vessel is withdrawn from service there, whichever occurs later), the shipping company shall either—

(a) Send a copy of each certificate of discharge to the address in paragraph 14.103(a) of this part; or

(b) Electronically transmit the data that go onto the certificates, in proper format, via disk to the address in § 14.103(a) of this part, via modem to an electronic address which the shipping company may request from the National Maritime Center or via internet.

§ 14.315 Storage of shipping articles and of certificates of discharge.

(a) Each shipping company shall keep all original shipping articles and copies of all certificates of discharge for ten years. The Coast Guard will dispose of copies of certificates submitted manually, once the data are entered into its sea-service database and are validated.

(b) Each shipping company that goes out of business or merges with another company shall send all original articles to the address in paragraph 14.103(a) of this part within 30 days of the transaction.

Subpart D—Oceanographic-Research Vessels

§ 14.401 General.

Unless otherwise provided by Title 46, U.S.C., by any amending or supplementing that Title, or by this subpart, that Title—as far as it governs the employment of merchant mariners—remains, and any act amending or supplementing that Title becomes, applicable to oceanographic-research vessels.

§ 14.403 Exemptions.

(a) Certain requirements of Title 46, U.S.C., do not apply to the employment of merchant mariners on oceanographic-research vessels. These requirements are those concerned with, among other things, the shipment and discharge of mariners, their pay and allotments, and the adequacy of their clothing. 46 U.S.C. 2113(2) allows exemptions of oceanographic-research vessels from certain requirements of Part B, C, F, or G of Subtitle II of Title 46 U.S.C., upon such terms as the Secretary deems suitable. The exemptions available under this subpart are subject to the terms specified below:

(1) No use of any exemption relieves the owner, charterer, managing operator, master, or individual in charge of the vessel of other statutory responsibilities for the protection of every mariner under his or her command.

(2) If it is presented at a reasonable time and in a reasonable manner, the master or individual in charge shall receive, consider, and appropriately address the legitimate complaint of any mariner.

(b) For any oceanographic-research vessel sailing with any mariner employed by any firm, association, corporation, or educational or governmental body or agency, the Commandant may grant exemptions from Title 46, U.S.C.:

(1) Section 10301, Application.

(2) Section 10302, Shipping articles (for foreign and intercoastal voyages).

(3) Section 10307, Posting of articles.

(4) Section 10308, Foreign engagements.

(5) Section 10311, Certificates of discharge.

(6) Sections 10313 & 10504, Wages.

(7) Sections 10314 & 10505, Advances.

(8) Section 10315. Allotments.

(9) Sections 10316 & 10506, Trusts.

(10) Sections 10321 & 10508, General penalties.

(11) Section 10502, Shipping articles (for coastwise voyages).

(12) Section 10509, Penalty for failure to begin coastwise voyages.

§ 14.405 Procedures.

(a) Upon written request by the owner, charterer, managing operator, master, or individual in charge of the vessel to the OCMI of the Coast Guard in whose zone the vessel is located, the Commandant may grant an exemption of any oceanographic-research vessel designated by 46 U.S.C. 2113(2) from any requirement of any section listed by paragraph 14.403(b) of this part.

(b) The request must state—

(1) Any requirement of any section listed by paragraph 14.403(b) of this part from which the applicant wishes an exemption; and

(2) What business-practices regarding, among other things, the shipment and

discharge of merchant mariners, their pay and allotments, and the adequacy of their clothing would justify the exemption.

(c) The OCMI will forward the request, along with his or her recommendation, to the Commandant, who will determine whether to grant any exemption of any vessel from any requirement. The OCMI will issue a letter indicating any exemption granted. The master or individual in charge of the vessel shall keep the letter aboard the vessel.

(d) If operating conditions change, the owner, charterer, managing operator, master, or individual in charge of the vessel shall so advise the OCMI. The OCMI will forward pertinent information on how the conditions have changed, along with his or her recommendation, to the Commandant, who will determine whether any exemption should remain granted.

§ 14.407 Reports.

(a) The owner, charterer, managing operator, master, or individual in charge of each oceanographic-research vessel of 100 gross tons or more shall maintain a record of the employment, discharge, or termination of service of every merchant mariner in the crew. At least every six months, the person maintaining this record shall transmit it to the Coast Guard—either manually, in the form of a copy of a certificate of discharge, or electronically.

(b) The owner, charterer, managing operator, master, or individual in charge of the vessel shall keep original shipping articles and a copy of each certificate ready for review by the Coast Guard or the concerned mariner upon request. (After the effective date of this rule, the Coast Guard will no longer keep either original articles or copies of certificates; it will keep only electronic records of employment.)

(c) The master or individual in charge of the vessel shall ensure that every entry made in the articles agrees with the corresponding entry made in a continuous discharge book, on a certificate, or in any other proof of sea service furnished to the mariner.

(d) Each oceanogrpahic company shall keep all original articles and copies of all certificates for ten years. After then each such company shall send all articles to the address in paragraph 14.103(a) of this part.

(e) Each oceanographic company that goes out of business or merges with another company shall send all original articles to the address in paragraph 14.103(a) of this part, within 30 days of the transaction.

Dated: March 21, 1996.

J.C. Card,

Rear Admiral, U.S. Coast Guard, Chief, Office of Marine Safety, Security and Environmental Protection.

[FR Doc. 96–7455 Filed 3–27–96; 8:45 am]

BILLING CODE 4910–14–M

FEDERAL COMMUNICATIONS COMMISSION

47 CFR Part 76

[CS Docket No. 96–57; FCC 96–117]

Telecommunications Act of 1996

AGENCY: Federal Communications Commission.

ACTION: Proposed rule.

SUMMARY: The Commission is issuing this Notice of Proposed Rulemaking (''NPRM'') in order to solicit comment on the proper implementation of Section 623(a)(7)(A) of the Communications Act. This NPRM is necessary to fulfill the statutory requirement in Section 301(j) of the Telecommunications Act of 1996 that the Commission allow cable operators to aggregate, on a franchise, system, regional, or company level, their equipment costs into broad categories regardless of the varying levels of functionality of the equipment within each such broad category. This proceeding will permit the Commission to issue final rules.

DATES: Comments are due April 12, 1996. Reply comments are due April 22, 1996.

FOR FURTHER INFORMATION CONTACT: Ibn Spicer, Cable Services Bureau, Financial Analysis Division (202) 418–2296.

SUPPLEMENTARY INFORMATION: This is a synopsis of the Notice of Proposed Rulemaking in CS Docket No. 96–57, FCC 96–117, adopted March 18, 1996 and released March 20, 1996. The complete text of this Notice of Proposed Rulemaking is available for inspection and copying during normal business hours in the FCC Reference Center (room 239), 1919 M Street N.W., Washington, DC, and also may be purchased from the Commission's copy contractor, International Transcription Services, Inc. (''ITS Inc.'') at (202) 857–3800, 2100 M Street N.W., Suite 140, Washington, DC 20017.

Synopsis of Notice of Proposed Rulemaking

1. In this Notice of Proposed Rulemaking (''NPRM''), we propose to amend our rules to implement Section 301(j) of the Telecommunications Act of 1996 (''1996 Act'') which adds a new Section 623(a)(7) to the Communication Act of 1934, as amended (''Communications Act''). Section 301(j) of the 1996 Act requires that the Commission allow cable operators to aggregate, on a franchise, system, regional, or company level, their equipment costs into broad categories regardless of the varying levels of functionality of the equipment within each such broad category. That section also provides that ''[s]uch aggregation shall not be permitted with respect to equipment used by subscribers who receive only a rate regulated basic tier.''

Discussion

A. Cost Categorization

2. Section 301(j) of the 1996 Act requires the Commission to allow regulated operators to aggregate ''their [customer] equipment costs into broad categories, such as converter boxes, regardless of the varying levels of functionality of the equipment within each such broad category.'' We tentatively conclude that the statute intends that equipment be classified and placed in categories based on the primary purpose of the equipment.

3. We propose to amend the Equipment Basket provisions in Section 76.923(c) to allow categorization of customer equipment costs into broad categories. We further propose eliminating the language in Sections 76.923(f) and (g) that requires separate charges for each significantly different type of remote control device, converter box, and other customer equipment. We propose amending the rules to require that equipment be categorized based on its primary purpose. Thus, customer equipment, except equipment used by basic-only subscribers, that is used for the same purpose may be aggregated into the same broad category and priced at the same rate, regardless of the level of functionality. We seek comment on whether the Commission should establish a definition of the term ''level of functionality'' in order to bring more certainty to these new rules. If commenters believe we should do so, they should propose a definition of that term. Because equipment rates to subscribers must be based on actual costs, operators must base equipment charges on the same aggregation level as their costs. We propose amending our rules to make this explicit. Section 76.923(l) currently permits small systems to average costs for ''similar types of equipment'' on a company-wide basis. We propose eliminating this section since all systems shall be permitted to aggregate equipment

pursuant to the new provisions in the 1996 Act.

4. Section 76.923(h) currently contains language that effectively requires separate charges for connections, which includes inside wire, additional outlets and signal boosters, if needed, used to provide cable service to additional television receivers. That language was included to implement Section 623(b)(3) of the Communications Act of 1934, as amended, which specifically required rates for installation and monthly use of connections for additional television receivers be separate from rates for the initial receiver. Therefore, we tentatively conclude that additional connections may not be aggregated with initial connections into a broad category.

B. Organizational Levels

5. In light of new section 623(a)(7), we propose that Section 76.923(c) of our rules be amended to specifically permit customer equipment cost aggregation at the franchise, system, regional, or company level. Because equipment rates to subscribers must be based on actual costs, operators must base equipment charges on the same aggregation level as their costs. We propose amending our rules to make this explicit. Furthermore, to the extent that our current rules permit cost aggregation of equipment only in a manner consistent with an operator's practices on April 3, 1993, we propose eliminating this date restriction. We tentatively conclude that such a restriction would improperly prevent an operator from aggregating costs at higher organizational levels, as specifically permitted in the statute.

6. We tentatively conclude that Congress did not intend that cost aggregation be permitted to the same extent for installation charges. We reach this tentative conclusion because Section 301(j) of the 1996 Act refers only to equipment and not to installations, whereas the 1992 Cable Act separately mentions installations. Consistent with our small system rules, we believe that customer equipment charges are less likely to vary significantly between systems, whereas installation charges are more dependent on local labor and other costs that can vary between communities. We recognize, however, that this requirement could impose additional burdens on cable operators, since customer equipment rates could be set at higher organizational levels than installation rates. We therefore propose that operators be permitted to aggregate installation costs based on specific service areas designated for the aggregation of those costs. Under this approach, a rate could be established for installation for a specific service area that is chosen by the operator because the costs of providing installation are substantially similar throughout all franchises in that chosen service area. We seek comment on this approach. We also seek comment on whether there are alternative levels at which installation costs could be identified that would ease burdens on operators, yet still comport with Congressional intent.

C. Basic-Only Subscriber Equipment

7. The 1996 Act prohibits ''[s]uch aggregation * * * with respect to equipment used by subscribers who receive only a rate regulated basic service tier.'' We tentatively conclude that Congress was concerned that basic-only subscribers not subsidize the costs of more sophisticated equipment used by subscribers taking services in addition to basic. Therefore, we tentatively conclude that equipment used by basic-only subscribers may not be aggregated into broad categories. We propose amending Section 76.923(c) to provide that the cost of equipment used by basic service-only customers may not be averaged with other customer equipment. However, the statute is not clear as to whether a cable operator may aggregate the costs of equipment used by basic-only customers at higher organizational levels and developing system, regional, or company average prices for such equipment. Although we recognize this ambiguity, we believe that allowing cable companies to aggregate the costs of equipment used by basic service-only customers at a higher organizational level and develop a rate based upon such aggregation does not contravene Congress' concern that basic-only subscribers not subsidize the costs of more sophisticated equipment used by subscribers taking other services in addition to basic. Any aggregation of the costs of basic service-only equipment at a higher organizational level will still only include equipment for that level of service. We seek comment on this issue.

D. Equipment Rates Jurisdiction and Review

8. Affected local franchising authorities will continue to review the equipment rates and supporting aggregated cost data as part of the review of the cable operators' rate justifications for basic rates. We recognize that the review of aggregated cost data regarding equipment by each of the affected local franchising authorities could lead to varying analyses and potentially inconsistent orders regarding that data. We seek comment on whether there is an alternative that could be more administratively efficient for local franchising authorities and cable operators alike.

E. FCC Form 1205

9. Because of our above tentative conclusions and proposed rules changes, we believe that FCC Form 1205 will need to be modified. We are proposing revisions to Form 1205 and seek comment on these revisions. The pages of Form 1205 containing revisions are set forth below.

Procedural Provisions

A. Ex Parte Presentations

10. This is a non-restricted notice-and-comment rulemaking proceeding. *Ex parte* presentations are permitted, except during the Sunshine Agenda period, provided that they are disclosed as provided in the Commission's rules. See generally 47 CFR Sections 1.1202, 1.1203, 1.1206(a).

B. Initial Regulatory Flexibility Analysis

11. Pursuant to Section 603 of the Regulatory Flexibility Act, the Commission has prepared the following initial regulatory flexibility analysis (''IRFA'') of the expected impact of these proposed policies and rules on small entities. Written public comments are requested on the IRFA. These comments must be filed in accordance with the same filing deadlines as comments on the rest of the NPRM, but they must have a separate and distinct heading designating them as responses to the IRFA. Our initial regulatory flexibility analysis under the Regulatory Flexibility Act indicates that if the proposed rule changes are promulgated, there will not be a significant economic impact on a substantial number of small business entities, as defined by Section 601(3) of the Regulatory Flexibility Act and that any impact will be to give operators new, less burdensome options to comply with our rules. We are committed to reducing the regulatory burdens on small cable operators whenever possible, consistent with our other public interest responsibilities. The Secretary shall send a copy of this NPRM of Proposed Rulemaking to the Chief Counsel for Advocacy of the Small Business Administration in accordance with Section 603(a) of the Regulatory Flexibility Act, 5 U.S.C. Sections 601 *et seq.* (1981).

12. The Commission issues this NPRM to consider the changes needed to permit cable operators to aggregate equipment costs into broad categories

and at the organizational level of their choice, as required by Section 301(j)) of the 1996 Act.

13. Objectives. To solicit comments on the rule changes needed to implement Section 301(j) of the 1996 Act.

14. Legal Basis. Action as proposed for this rulemaking is contained in Section 301(j) of the 1996 Act.

15. Description, Potential Impact and Number of Small Entities Affected. The proposals, if adopted, will not have a significant effect on a substantial number of small entities. The proposed rules changes would provide all regulated entities with new options, but would not require them to change the methodology by which they currently justify equipment rates. Thus, any economic impact of the rule changes will be positive.

16. Reporting, Recordkeeping and Other Compliance Requirements. None.

17. Federal Rules which Overlap, Duplicate or Conflict with these Rules. None.

18. Any Significant Alternatives Minimizing Impact on Small Entities and Consistent with Stated Objectives. None.

C. Comment Filing Procedures

19. Pursuant to applicable procedures set forth in Sections 1.415 and 1.419 of the Commission's rules, 47 CFR Sections 1.415, 1.419, interested parties may file comments on April 12, 1996, and reply comments on April 22, 1996. To file formally in this proceeding, interested parties must file an original and four copies of all comments, reply comments, and supporting comments. We find these periods for the filing of comments and reply comments to be reasonable in light of the 1996 Act's mandate that the Commission issue revisions to the appropriate rules and forms concerning the aggregation of equipment costs within 120 days of enactment. See *Florida Power & Light Co.* v. *United States,* 846 F.2d 765 (D.C. Cir. 1988) cert. denied, 490 U.S. 1045 (1989). Any party that wishes each Commissioner to receive a personal copy of its comments, must file an original and nine copies. Comments and reply comments should be limited to 25 pages, with reasonable margins and font size of at least 12 points, and sent to Office of the Secretary, Federal Communications Commission, 1919 M Street, N.W., Room 222, Washington, D.C. 20554, with a copy to Lenworth Smith, Jr. of the Cable Services Bureau, 2033 M Street, N.W., Room 805E, Washington, D.C. 20554. Comments and reply comments will be available for public inspection during regular business hours in the FCC Reference Center, 1919 M Street, N.W., Room 239, Washington, D.C. 20554.

D. Paperwork Reduction Act

20. Initial Paperwork Reduction Act of 1995 Analysis. This NPRM proposes a modified information collection for FCC Form 1205. As part of its continuing effort to reduce paperwork burdens, we invite the general public and the OMB to take this opportunity to comment on the information collections contained in this NPRM, as required by the Paperwork Reduction Act of 1995, Public Law 104–13. Public and agency comments are due at the same time as other comments on this NPRM; OMB comments are due 60 days from date of publication of this NPRM in the Federal Register. Comments should address: (a) whether the proposed collection of information is necessary for the proper performance of the functions of the Commission, including whether the information shall have practical utility; (b) the accuracy of the Commission's burden estimates; (c) ways to enhance the quality, utility, and clarity of the information collected; and (d) ways to minimize the burden of the collection of information on the respondents, including the use of automated collection techniques or other forms of information technology.

21. Written comments by the public on the proposed and/or modified information collections are due on or before 15 days after publication in the Federal Register, and reply comments on or before 10 days after the comment due date. Written comments must be submitted by the Office of Management and Budget (''OMB'') on the proposed and/or modified information collections on or before 60 days after date of publication in the Federal Register. In addition to filing comments with the Secretary, a copy of any comments on the information collections contained herein should be submitted to Dorothy Conway, Federal Communications Commission, Room 234, 1919 M Street, N.W., Washington, DC 20554, or via the Internet to dconway@fcc.gov and to Timothy Fain, OMB Desk Officer, 10236, NEOB, 725 - 17th Street, N.W., Washington, DC 20503 or via the Internet to fain__t@al.eop.gov.

OMB Approval Number: 3060–0603.

Title: Rates for equipment and installation used to receive the basic service tier

Type of Review: Revision of existing collection

Respondents: Businesses or other for profit; state, local or tribal government

Number of Respondents: 2,000.

Estimated Time Per Response: The commission estimates an average burden of 4 hours for cable operators to maintain in-house accounting records pertaining to 76.923. The Commission estimates a burden of 1 hour for cable operators contracting out for accounting services.

Total Annual Burden: We estimate 75% of respondents maintain records in-house and 25% contract out. 1,500 (75% in-house) × 4 hours = 6,000. 500 (25% contracted out) × 1 hour = 500. 6,000 + 500 = 6,500 hours.

Estimated costs per respondent: We estimate that operators contracting out accounting assistance will pay $100 per hour for the maintenance of their accounting systems. 500 (25% contracted out) accounting systems × 4 hours @ $100 per hour = $200,000.

Needs and Uses: The information is used by cable operators in their accounting systems to justify rates for equipment and installations.

OMB Approval Number: 3060–0592.

Title: FCC Form 1205 Determining Costs of Regulated Cable Equipment and Installation.

Form No.: FCC Form 1205.

Type of Review: Revision of existing collection

Respondents: Business and other for profit; state, local and tribal government

Number of Respondents: 8,800.

Estimated Time Per Response: The Commission estimates an average burden of 12 hours for operators to complete the FCC Form 1205 in-house. For operators contracting out accounting and legal assistance for completing the FCC Form 1205, we estimate an average burden of 1 hour.

Total Annual Burden: We estimate 75% of operators complete the FCC Form 1205 in-house and 25% contract out for assistance. 6,600 (75% in-house) × 12 hours = 79,200. 2,200 (25% contracted out) × 1 hour = 2,200 hours. 79,200 + 2,200 = 81,400 hours. The average burden to local franchising authorities to review FCC Form 1205s is estimated to be 8 hours per filing. We estimate local franchising authorities review approximately 8,000 FCC Form 1205 filings annually. 8,000 × 8 hours = 64,000. 81,400 + 64,000 = 145,400 hours.

Estimated costs per respondent: We estimate postage and photocopying costs of $2 per filing. 8,800 × $2 = $17,600. We estimate that operators contracting out accounting assistance will pay $100 per hour to complete FCC Form 1205. 2,200 (25% contracted out) × 12 hours @ $100 per hour = $2,640,000. $17,600 + $2,640,000 = $2,657,600.

Needs and Uses: Information derived from FCC Form 1205 filings facilitates the review of equipment and installation rates when reviewed by applicable local franchising authorities.

Ordering Clauses

22. Accordingly, *it is Ordered* that, pursuant to Sections 4(i), 4(j), 303(r), and 623 of the Communications Act of 1934, as amended, 47 U.S.C. Sections 154(i), 154(j), 303(r), and 543, *Notice is Hereby Given* of proposed amendments to Part 76, in accordance with the proposals, discussions, and statement of issues in the Notice of Proposed Rulemaking, and that *Comment is Sought* regarding such proposals, discussion, and statement of issues.

23. *It is Further Ordered* that, the Secretary shall send a copy of this Notice of Proposed Rulemaking, including the regulatory flexibility certification, to the Chief Counsel for Advocacy of the Small Business Administration, in accordance with paragraph 603(a) of the Regulatory Flexibility Act, 5 U.S.C. Sections 601 et seq. (1981).

List of Subjects in 47 CFR Part 76

Cable television.

Federal Communications Commission.

William F. Caton,

Acting Secretary.

Proposed Amendatory Text

Part 76 of Title 47 of the Code of Federal Regulations is proposed to be amended as follows:

PART 76—[AMENDED]

1. The authority citation for Part 76 continues to read as follows:

Authority: Secs. 2, 3, 4, 301, 303, 307, 308, 309, 48 Stat. as amended, 1064, 1065, 1066, 1081, 1082, 1083, 1084, 1085, 1101; 47 U.S.C. Secs. 152, 153, 154, 301, 303, 307, 308, 309, 532, 535, 542, 543, 552, as amended, 106 Stat. 1460.

2. Section 76.923 is amended by revising paragraphs (c), (f), and (g), removing paragraph (l) and redesignating paragraphs (m) through (o) as as paragraphs (l) through (n)and revising redesignated paragraph (l) to read as follows:

§ 76.923 Rates for equipment and installation used to receive the basic service tier.

* * * * *

(c) Equipment basket. A cable operator shall establish an Equipment Basket, which shall include all costs associated with providing customer equipment and installation under this section. Equipment Basket costs shall be limited to the direct and indirect material and labor costs of providing, leasing, installing, repairing, and servicing customer equipment, as determined in accordance with the cost accounting and cost allocation requirements of § 76.924, except that operators do not have to aggregate costs in a manner consistent with the accounting practices of the operator on April 3, 1993. The Equipment Basket shall not include general administrative overhead including marketing expenses. The Equipment Basket shall include a reasonable profit.

(1) Customer Equipment. Costs of customer equipment included in the Equipment Basket may be aggregated, on a franchise, system, regional, or company level, into broad categories. Except to the extent indicated in paragraph (c)(2) of this section, such categorization may be made, provided that each category includes only equipment having the same primary purpose, regardless of the levels of functionality of the equipment within each such broad category. When submitting its equipment costs based on average charges, the cable operator must provide a general description of the averaging methodology employed and a justification that its averaging methodology produces reasonable equipment rates.

(2) Basic Service Tier Only Equipment. Costs of customer equipment included in the Equipment Basket, which is used by subscribers who receive only a rate regulated basic service tier, shall not be aggregated into broad cost categories. Costs of each significantly different type of equipment must be classified into specific equipment cost categories. The costs shall not be averaged with the costs of equipment that is used by subscribers who receive only a rate regulated basic service tier.

(3) Installation Costs. Installation costs may be aggregated only for a specific service area, to the extent that the costs of providing installation are substantially similar throughout all franchises in that service area.

* * * * *

(f) Remote charges. Monthly charges for rental of a remote control unit shall consist of the average annual unit purchase cost of remotes leased, including acquisition price and incidental costs such as sales tax, financing and storage up to the time it is provided to the customer, added to the product of the HSC times the average number of hours annually repairing or servicing a remote, divided by 12 to determine the monthly lease rate for a remote according to the following formula:

$$\text{Monthly Charge} = \frac{\text{UCE} + (\text{HSC} \times \text{HR})}{12}$$

Where, HR = average hours repair per year; and UCE = average annual unit cost of remote.

(g) Other equipment charges. The monthly charge for rental of converter boxes and other customer equipment shall be calculated in the same manner as for remote control units. Separate charges may be established for each category of other customer equipment.

* * * * *

(l) Cable operators shall set charges for equipment and installations to recover Equipment Basket costs. Such charges shall be set, consistent with the level at which Equipment Basket costs are aggregated as provided in § 76.923(c). Cable operators shall maintain adequate documentation to demonstrate that charges for the sale and lease of equipment and for installations have been developed in accordance with the rules set forth in this section.

* * * * *

Attachment—Changes to the Instructions for FCC Form 1205

Note: This attachment will not appear in the Code of Federal Regulations.

FCC Form 1205—Instructions for Determining Costs of Regulated Cable Equipment and Installation

''Equipment Form''

- Schedule B: Annual Operating Expenses for Service Installation and Maintenance of Equipment. This schedule collects total annual operating expenses for installation and maintenance of cable facilities. The costs collected here include salaries, benefits, and supplies.
- Schedule C: Capital Costs of Leased Customer Equipment. This schedule computes the annual capital costs for each type or category of customer premises equipment that you offer in connection with regulated service. The method of computing capital costs is the same as that used in Schedule A.
- Schedule D: Average Hours Per Installation. This schedule is used only if you choose to charge average rates for different types of installation services, as opposed to an hourly service charge. This schedule collects the average hours required to complete various types of installations.
- Worksheet for Calculating Permitted Equipment and Installation Charges. You must complete this worksheet *only* if you are calculating the costs of specific equipment and installations to derive the maximum rates you may charge for regulated equipment and installations.
- Worksheet for Calculating Total Equipment and Installation Costs. Utilizing

the data collected and computed in Schedules A through D, this worksheet calculates a monthly per subscriber cost of regulated equipment and installations that is used to separate these costs from cable services rates. You must complete this worksheet *only* if you are filing this form in conjunction with a FCC Form 1200, Form 1220, or Form 1225 to establish maximum permitted rates for regulated cable services.

• Summary Schedule: Current Equipment and Installation Rates. This Schedule collects information determined on the Worksheet for Calculating Permitted Equipment and Installation Charges and presents it in summary form together with your actual equipment and installation charges.

General Instructions

You should complete this Form using financial data from the company's general ledger and subsidiary records maintained in accordance with generally accepted accounting principles. The Commission's cost accounting rules require that cable operators maintain their accounts in accordance with these requirements and in a manner that will enable identification of appropriate costs and application of the Commission's cost assignments and allocation procedures (*see* 47 CFR § 76.924). The data submitted in this Form 1205 should be from the operator's fiscal year indicated on the cover sheet. However, when there has been an unusual change in operations, data from a representative month may be used for the calculation of rates, subject to acceptance by the franchising authority or, when applicable, by the FCC. You must attach justification for this approach.

To the extent you have not previously maintained accounts in a manner consistent with our rules, and do not have fully developed cost data, you must indicate on this Form that you are using estimates, where necessary, in calculating equipment and installation costs and rates, and provide justification that the estimates are reasonable.

The data for installations (includable in Schedules A and C) may be identified only for a specific service area, to the extent that the costs of providing installations are substantially similar throughout all franchises in that service area. The data for customer equipment (includable in Schedule C) may be identified on a franchise, system, regional, or company level. For purposes of calculating cable service rates on an FCC Form 1200, 1220, or 1225, the cost data developed on this Form 1205 must be adjusted to the franchise area level (*see* Worksheet for Calculating Permitted Equipment and Installation Charges or Worksheet for Calculating Total Equipment and Installation Costs below for instructions).

Cable operators completing this Form in conjunction with FCC Form 1200 should be aware that the figure entered on line 14 of the Worksheet for Calculating Total Equipment and Installation Costs will be entered on either line D2 or line E2, and on line I2 of FCC Form 1200.

Precision of Calculation; Rounding

If you are performing the calculations required by this form by hand, you must display at least four decimal places. If you are using a calculator or computer, you must carry out the calculation to the full precision afforded by your calculator or computer and display at least four decimal places. If you are using the spreadsheet version of this form, the spreadsheet will round calculations for you; you do not need to display additional decimal places.

The *only* place you should round the figures is in the Summary Schedule. These figures should be rounded to the nearest cent.

About the Spreadsheet

The FCC has developed an electronic spreadsheet to assist you in making the necessary calculations on the Form 1205. We strongly recommend that you make use of this spreadsheet.

If you use the spreadsheet, the values for the shaded boxes on the Form 1205 will be calculated automatically and filled in for you. Instructions for the corresponding line numbers are italicized. You may submit a completed version of an official Form 1205, an exact photocopy of that form, or a copy generated by Commission software, provided that it has the appearance of an actual Form 1205.

If You Need Help

If you have any questions while completing this Form, please call the FCC's Cable Services Bureau between 9:30 a.m. and 5:30 p.m. Eastern Standard Time on Monday through Friday at (202) 418–2381.

FCC Notice to Individuals Required by the Privacy Act and the Paperwork Reduction Act

The solicitation of personal information in this form is authorized by the Communications Act of 1934, as amended. The Commission and/or the local franchising authority will use the information provided in this form to determine the reasonableness of a cable company's rates. In reaching that determination, or for law enforcement purposes, it may become necessary to provide personal information contained in this form to another government agency. If information requested on this form is not provided, processing may be delayed. All information provided in this form will be available for public inspection. Your response is required to apply the Commission's cable rate standards and to provide a response to consumer complaints. Respondents are not required to respond to this collection of information unless it displays a currently valid Office of Management and Budget control number.

Public reporting burden for this information is estimated to average 20 hours per response, including the time for reviewing instructions, searching existing data sources, gathering and maintaining the data needed, and completing and reviewing the collection of information. Send comments regarding this burden estimate or any other aspect of this collection of information, including suggestions for reducing the burden, to the Federal Communications Commission, Records Management Division, Washington, D.C. 20554. Do *not* send completed forms to this address.

The foregoing notice is required by the Privacy Act of 1974, Pubic Law 93–579, December 31, 1975, 5 U.S.C. 522a(e)(3) and the Paperwork Reduction Act of 1995, 104–13, May 22, 1995, 47 U.S.C. 3507.

Instructions for Schedule C—Capital Costs of Leased Customer Equipment

Schedule C computes the annual capital costs of equipment leased to customers. Follow the instructions below for each type or category of leased equipment.

Note: Subscriber drops up to the Commission-defined cable network demarcation point at the customer's premises are considered network equipment and may not be included as customer equipment on Schedule C.

Line A—Equipment. List all customer equipment for which you wish there to be a separate charge. You may calculate separate charges for specific types of equipment including different models of remote control units, different types of converter boxes, and other equipment (e.g., splitters and amplifiers). However, at your option, customer equipment may instead be listed in broad categories, provided that each category includes only equipment having the same primary purpose, regardless of the levels of functionality of the equipment within each broad category. Except, customer equipment which is used by subscribers who receive only a rate regulated basic service tier, shall not be aggregated into broad cost categories. Costs of each significantly different type of equipment must be classified into specific equipment cost categories.

The costs shall not be averaged with the costs of equipment that is used by subscribers who receive only a rate regulated basic service tier. In addition, with respect to the lease of cable connections, the cost of additional connections may not be aggregated with the cost of initial connections.

On an attached sheet, list separately each type or category of other equipment for which you plan to develop a separate charge and provide the necessary information as required on lines A through K of Schedule C to compute the charge. A separate charge must be developed for each type or category of other customer equipment. Enter in the ''Other Equipment'' column of Schedule C the total figures for the equipment included on your attachment.

Line B—Total Maintenance/Service Hours. Enter the total maintenance and/or service hours. Attach a Schedule explaining how you calculated these figures.

Line C—Total Number of Units in Service. Enter the total number of units in service for leased remotes and converter boxes. For other leased equipment, list the total number of units in service or the total number of subscribers using this equipment, whichever is appropriate. Use either the number of units or subscribers for the last day of the fiscal year covered by this Form 1205.

Line D—Gross Book Value. Enter the gross book value of the listed equipment as of the date you closed books for the time period covered by the filing of this Form. The gross book value includes the cost of a reasonable number of spare customer equipment units that the operator keeps on-hand as replacements for broken equipment.

Schedule D asks for information about four categories of installations: (a) installations of

unwired homes; (b) installations of already wired homes; (c) installations of additional connections at the time of initial installation; and (d) installations of additional connections after initial installation. These data are needed in the first worksheet below to calculate the four separate average charges that the Commission requires for an operator choosing to exercise the average charge option. Spaces also are included for other specific types of installations (such as those requiring extra long drops to the home). Attach additional sheets as needed.

Worksheet for Calculating Permitted Equipment and Installation Charges

Step A: Hourly Service Charge (HSC).

The Hourly Service Charge (HSC) is designed to recover the costs of service installation and maintenance of customer equipment. The HSC will be used as a factor in developing permitted charges for installation and monthly lease of individual pieces of equipment. To calculate the HSC, you will compute your annual capital costs plus expenses for the maintenance of customer equipment and the installation of basic tier service. You will divide the total costs and expenses by the total number of person-hours spent on those activities over the past year.

The HSC includes the annual capital costs for installing, maintaining, and repairing customer equipment for the specific service area to which this filing applies; the capital cost of the customer equipment itself, however, is not recovered through the HSC. That cost is recovered through the lease of that type of equipment (*see* Steps C through E of the Worksheet for Calculating Permitted Equipment and Installation Charges).

Note 1: If an expense amount is included on Schedule B for equipment sent out for repair, an appropriate adjustment to the total labor hours reported on this Form must be made. This adjustment adds ''equivalent labor hours'' to the total company labor hours. This may be calculated, for example, as total costs included on Schedule B for work sent out for repair divided by the average company technician wage rate. The total cost may be recovered by including the average hours in the computation for the appropriate equipment charges computed in Steps C through E. In any case that an amount is included on Schedule B for work sent out for repair, explain all the adjustments made on the Worksheet. This explanation must include the number of hours added on line 6 below as well as a description of and the number of hours added into the charges developed in Steps C through E.

Note 2: With respect to the calculation for labor costs associated with installation of the drop up to the Commission-defined cable network demarcation point at the customer's premises, you have two options. The first option is to include the labor costs associated with subscriber drops in the charges for installations. The second option is to capitalize such costs in distribution plant as part of the cost of drops. (In this case, the labor cost for drops is recovered in the charges for cable services only—not in installation or customer equipment charges.) If the second option is chosen, the costs and the associated hours must be eliminated from the charges for all customer equipment and installation charges.

Line 9d1—HSC. Enter the HSC from line 7.

Line 9d2—Average Hours Per Additional Connection Installation Requiring Separate Installation. Enter the figure from line D of Schedule D.

Line 9d3—Charge per Additional Connection Installation Requiring Separate Installation. Multiply line 9d1 by line 9d2.

Line 9e—Other Installations (As specified in Schedule D, Line E).

If there are more than three other types of installations, attach a separate sheet showing how the charges for these other installations are calculated.

Line 9e1—HSC. Enter the HSC from line 7.

Line 9e2—Average Hours Per Installation of Item 1. Enter the figure on Schedule D, line E, Item 1.

Line 9e3—Charge per Installation of Item 1. Multiply line 9e1 by line 9e2.

Line 9e4—HSC. Enter the HSC from line 7.

Line 9e5—Average Hours Per Installation of Item 2. Enter the figure on Schedule D, line E, Item 2.

Line 9e6—Charge per Installation of Item 2. Multiply line 9e4 by line 9e5.

Line 9e7—HSC. Enter the HSC from line 7.

Line 9e8—Average Hours Per Installation of Item 3. Enter the figure on Schedule D, line E, Item 3.

Line 9e9—Charge per Installation of Item 3. Multiply line 9e7 by line 9e8.

Step C. Charges for Leased Remotes.

The rental charge for remote control units is designed to recover the costs of providing and maintaining each type or category of remote control unit leased by subscribers and includes a reasonable profit. The charge determined in this step will not reflect the costs of installation. You must repeat the following substep calculations for each significantly different type or category of remote listed in Schedule C. Describe each type or category of remote in detail sufficient to identify differences among types and/or categories. Attach extra sheets as needed.

Line 10—Total Maintenance/Service Hours. Enter the total maintenance and/or service hours for each type or category of remote from the corresponding column on Schedule C, line B.

Line 11—HSC. Enter the HSC from line 7.

Line 12—Total Maintenance and Service Cost. Multiply line 10 by the HSC listed on line 11. The result is the total annual cost for repairing and servicing each type or category of remote.

Line 13—Annual Capital Costs. Enter the annual capital costs for each type or category of remote from the corresponding column of line K on Schedule C.

Line 14—Total Cost of Remote. Add line 12 to line 13. The sum is the total annual cost for each type or category of remote.

Line 15—Number of Units in Service. Enter the number of units of each type or category of remote in service from the appropriate column of line C on Schedule C.

Line 16—Unit Cost. Divide line 14 by 15. The result is the annual unit cost of each type or category of remote.

Line 17—Rate per Month. Divide the figure from line 16 by the number 12. The result will be the monthly cost of each type or category of remote including a reasonable profit. This figure is the maximum permitted monthly lease charge for each type or category of remote.

Step D. Charges for Leased Converter Boxes.

The rental charge for a converter box is designed to recover the costs of providing and maintaining that type or category of converter box leased by a subscriber and includes a reasonable profit. You must repeat the calculations in the following substeps for each type or category of converter box listed in Schedule C. Describe each type or category of converter box in detail sufficient to identify differences among types and/or categories. Attach extra sheets as needed.

Line 18—Total Maintenance/Service Hours. Enter the total maintenance and/or service hours for each type or category of converter box from the corresponding column of line B on Schedule C.

Line 19—HSC. Enter the HSC from line 7.

Line 20—Total Maintenance and Service Cost. Multiply the figure from line 18 by the HSC listed on line 19. The result is the total annual cost for repairing and servicing each type or category of converter box.

Line 21—Annual Capital Costs. Enter the annual capital costs for each type or category of converter box from the corresponding column of line K on Schedule C.

Line 22—Total Cost of Converters. Add line 20 to line 21. The sum is the total annual cost for each type or category of converter box.

Line 23—Number of Units in Service. Enter the number of units of each type or category of converter box from the corresponding column of line C on Schedule C.

Line 24—Unit Cost. Divide line 22 by line 23. The result is the annual unit cost of each type or category of converter box.

Line 25—Rate per Month. Divide the figure on line 24 by the number 12. The result is the monthly cost of each type or category of converter box including a reasonable profit. This figure is the maximum permitted monthly lease charge for each type of converter box.

Step E. Charges for Other Leased Equipment.

The rental charge for other leased equipment is designed to recover the costs of providing and maintaining that equipment leased by a subscriber and includes a reasonable profit. An operator choosing to establish charges for different types of other equipment must repeat the calculations in the following substeps for each type or category of other equipment listed in Schedule C. Describe each type or category of additional leased equipment in detail, *e.g.*, additional connections. Attach extra sheets as needed.

Commission rules permit operators to charge for power boosters installed in connection with additional connections. Operators may establish a separate charge for the power boosters or may establish a separate charge for additional connections with power boosters. Such charges should be identified and included in Step E.

Line 26—Total Maintenance/Service Hours. Enter the total maintenance and/or

service hours for this other equipment. Enter the figure from the corresponding column on Schedule C, line B.

Line 27—HSC. Enter the HSC from line 7.

Line 28—Total Maintenance and Service Cost. Multiply the figure on line 26 by the HSC listed on line 27. The result is the total annual cost for repairing and servicing other equipment.

[FR Doc. 96–7221 Filed 3–27–96; 8:45 am]

BILLING CODE 6712–01–P

DEPARTMENT OF TRANSPORTATION

Office of the Secretary

49 CFR Part 40

[OST Docket No. OST–96–1176, Notice 96–5]

RIN 2105–AC37

Amendments to Laboratory Certification Requirements

AGENCY: Office of the Secretary, DOT.

ACTION: Notice of proposed rulemaking.

SUMMARY: This NPRM proposes provisions that would permit drug testing laboratories located outside the U.S. to participate in the Department's drug testing program. The certification would happen on the basis of recommendations from the Department of Health and Human Services.

DATES: Comments should be received by May 13, 1996. Late-filed comments will be considered to the extent practicable.

ADDRESSES: Comments should be sent, preferably in triplicate, to Docket Clerk, Docket No. OST–96–1176, Department of Transportation, 400 7th Street SW., Room PL–400, Washington, DC, 20590. Comments will be available for inspection at this address from 9:00 a.m. to 5:30 p.m., Monday through Friday. Commenters who wish the receipt of their comments to be acknowledged should include a stamped, self-addressed postcard with their comments. The Docket Clerk will date-stamp the postcard and mail it back to the commenter.

FOR FURTHER INFORMATION CONTACT: Robert C. Ashby, Deputy Assistant General Counsel for Regulation and Enforcement, Room 10424, (202–366–9306); 400 7th Street SW., Washington DC, 20590.

SUPPLEMENTARY INFORMATION: Recently, the Federal Highway Administration (FHWA) issued a final rule applying its drug and alcohol testing requirements to foreign-based drivers operating in the United States (60 FR 49322; September 22, 1995). Under the rule, Canadian and Mexican drivers who come into the United States will be subject to testing on the same basis as U.S. drivers, beginning July 1, 1996, for employees of larger carriers and a year later for employees of smaller carriers.

In any case, Canadian and Mexican employers who collect drug urine specimens under FHWA rules will be able to have the specimens tested in U.S. laboratories certified by the Department of Health and Human Services (DHHS), on the same basis as U.S. employers. In the interest of facilitating program implementation, the Department hopes that it will be possible for Mexican and Canadian laboratories to participate in the program as well.

Canadian and Mexican laboratories may participate in the DOT-mandated testing program only if their participation is consistent with the Department's statutory authority. Strict safeguards for the accuracy and quality of laboratory tests are a key mandate of the Omnibus Transportation Employee Testing Act of 1991.

The motor carrier portion of the Act (49 U.S.C. 31306(b), which parallels the other modal sections of the Act), provides that, in carrying out the requirement to establish a motor carrier drug testing program, the Secretary ''shall'' develop requirements ''that shall''

> (2) For laboratories and testing procedures for controlled substances, incorporate the Department of Health and Human Services scientific and technical guidelines dated April 11, 1988, and any amendments to those guidelines, including mandatory guidelines establishing—
>
> (A) Comprehensive standards for every aspect of laboratory controlled substances testing and laboratory procedures to be applied in carrying out this section, including standards requiring the use of the best available technology to ensure the complete reliability and accuracy of controlled substances tests and strict procedures governing the chain of custody of specimens collected for controlled substances testing; * * *
>
> (C) Appropriate standards and procedures for periodic review of laboratories and criteria for certification and revocation of certification of laboratories to perform controlled substances testing in carrying out this section.
>
> (3) Require that a laboratory involved in testing under this section have the capability and facility, at the laboratory, of performing screening and confirmation tests; * * *

The language of these provisions is clearly mandatory, a point which the legislative history reinforces. Senate Report 102–54 (May 2, 1991), concerning S. 676, the bill that became the Act, notes, in response to concerns about testing accuracy and false positive tests, that ''By incorporating laboratory certification and testing procedures developed by HHS and DOT * * * the Committee has taken affirmative steps to ensure accuracy.'' (S. Rept. 102–54 at 7.) Later, in speaking of the laboratory and other safeguards in the bill, the report says that

> These safeguards are critical to the success of any testing program. They are designed to ensure that * * * there is accountability and accuracy of testing. They provide what the Committee believes are the basic minimums. * * * The Secretary is urged to carefully review the safeguards in any testing program to ensure they are adhered to in a vigorous manner. (*Id.* at 31)

More specifically on laboratory matters, the Committee said that

> Incorporating the HHS guidelines relating to laboratory standards and procedures * * * as DOT has done in Part 40 * * * is an essential component of the procedural safeguards specified in this subsection. * * * Realizing that these guidelines may be subject to future modification, the Committee has acted to specify that the basic elements of certain provisions now in effect are mandated, including the need for comprehensive standards and procedures for all aspects of laboratory testing of drugs * * * [and] the establishment of standards and procedures for the periodic review of laboratories and the development of criteria for laboratory certification or revocation of such certification. (*Id.* at 32)

It is noteworthy that Congress explicitly accepts an active DOT role in establishing and carrying out the laboratory-related provisions of the statute. What is mandatory is not that one agency or the other play any particular administrative role in the process, but that the protections embodied in the DHHS guidelines be applied, through DOT's rules, to participants in the program. There is no bar in the statutory language to a DOT rule assigning to DOT the task of reviewing and certifying laboratories, so long as these actions by DOT are based on the conformity of the laboratories to DOT's incorporation of DHHS laboratory standards. Consequently, DOT has broad legal discretion to take action in the area of drug testing procedures, extending to the certification of laboratories.

DOT and DHHS are working closely together with respect to the potential certification of foreign laboratories. As the two agencies envision the process, there could be two different ways in which foreign laboratories become certified. First, DHHS could review the application of the foreign laboratory, in the same manner that it reviews applications from U.S. laboratories. If the laboratory meets DHHS standards, DHHS would recommend that DOT certify the laboratory under DOT

authority. (The direct certifying authority of DHHS extends only to laboratories that would participate in the Federal employee testing program.) Second, DHHS could review the standards and procedures of a foreign certifying agency. If DHHS determined that the foreign agency had standards, procedures, and authority equivalent to those of DHHS, DHHS would recommend to DOT that DOT deem the foreign agency to be an equivalent certifying authority. Laboratories that the foreign agency certified would then be permitted to participate in the DOT testing program.

DOT and DHHS have discussed laboratory issues with officials of Transport Canada, the Canadian Trucking Association and its affiliates, and the Standards Council of Canada (a potential laboratory certification organization in Canada), as well as representatives of some Canadian laboratories. We have also had discussions with Mexican officials concerning program and laboratory matters. While a number of issues remain to be resolved, the Department is proposing a change to 49 CFR § 40.39 to accommodate the possibility that foreign laboratories may be able to participate in DOT-mandated drug testing.

The proposed amendment would add a new paragraph to authorize the participation of foreign laboratories in the DOT drug testing program in the two circumstances outlined above (i.e., based on a recommendation by DHHS that a particular laboratory meets DHHS certification requirements, or based on a certification by a foreign certifying organization whose standards and process had been deemed equivalent to those of DHHS). It should be emphasized that, if adopted, the proposed amendment would not have the effect of actually certifying any foreign laboratories. It would simply put in place a mechanism that would allow such laboratories to participate, if and when DOT and DHHS had determined that all issues had been resolved satisfactorily, in full compliance with DHHS requirements for laboratory certification.

Regulatory Process Matters

The proposed rule is considered to be a nonsignificant rulemaking under DOT Regulatory Policies and Procedures, 44 FR 11034. It also is a nonsignificant rule for purposes of Executive Order 12886. The Department certifies, under the Regulatory Flexibility Act, that the NPRM, if adopted, would not have a significant economic effect on a substantial number of small entities. The NPRM would not impose any costs or burdens on regulated entities, since it deals with a subject (applying for laboratory certification) that is completely voluntary. The rule has also been analyzed in accordance with the principles and criteria contained in Executive Order 12612, and it has been determined that it does not have sufficient federalism implications to warrant the preparation of a Federalism Assessment. The comment period is 45 days rather than 60 because, in order to permit the Department to certify foreign laboratories before the July 1, 1996, start date for testing of foreign drivers, the Department needs to complete this rulemaking on an expedited basis.

List of Subjects in 49 CFR Part 40

Drug Testing, Alcohol Testing, Reporting and Recordkeeping Requirements, Safety, Transportation.

For the reasons set forth in the preamble, 49 CFR Part 40 is proposed to be amended as follows:

PART 40—[AMENDED]

1. The authority citation for Part 40 would continue to read as follows:

Authority: 49 U.S.C. 102, 301, 322; 49 U.S.C. app. 1301nt., app. 1434nt., app. 2717, app. 1618a.

2. Section 40.39 is proposed to be revised to read as follows:

§ 40.39 Use of Certified Laboratories.

(a) Except as provided in paragraph (b) of this section, employers subject to this part shall use only laboratories certified under the DHHS ''Mandatory Guidelines for Federal Workplace Drug Testing Programs,'' April 11, 1988, and subsequent amendments thereto.

(b) Employers subject to this part may also use laboratories located outside the United States if—

(1) The Department of Transportation, based on a recommendation from DHHS, has certified the laboratory as meeting DHHS laboratory certification standards; or

(2) The Department of Transportation, based on a recommendation from DHHS, has recognized a foreign certifying organization as having equivalent laboratory certification standards and procedures to those of DHHS, and the foreign certifying organization has certified the laboratory pursuant to those equivalent standards and procedures.

Issued this 20th day of March 1996, at Washington, D.C.

Federico Peña,

Secretary of Transportation.

[FR Doc. 96–7565 Filed 3–27–96; 8:45 am]

BILLING CODE 4910–62–P

DEPARTMENT OF COMMERCE

National Oceanic and Atmospheric Administration

50 CFR Part 628

[Docket No. 960315079–6079–01; I.D. 031296D]

Atlantic Bluefish Fishery; Proposed Removal of FMP

AGENCY: National Marine Fisheries Service (NMFS), National Oceanic and Atmospheric Administration (NOAA), Commerce.

ACTION: Proposed rule; request for comments.

SUMMARY: NMFS proposes the withdrawal of Secretarial approval of the Atlantic Bluefish Fishery Management Plan (FMP) and removal of its implementing regulations. This action is taken in response to the President's Regulatory Reform Initiative.

DATES: Public comments must be received on or before May 13, 1996.

ADDRESSES: Copies of the draft Environmental Assessment (EA) and Regulatory Impact Review are available from the Northeast Regional Office, National Marine Fisheries Service, 1 Blackburn Drive, Gloucester, MA 01930.

Comments should be sent to Dr. Andrew A. Rosenberg, Regional Director, at the same address above. Please mark the envelope ''Comments—Bluefish Withdrawal.''

FOR FURTHER INFORMATION CONTACT: Myles Raizin, 508–281–9104.

SUPPLEMENTARY INFORMATION: Bluefish is a species that is found and harvested predominantly in state waters. The bluefish stock is described as overexploited with total catch having decreased from approximately 70,000 mt in 1983 to 22,000 mt in 1992 (17th Northeast Regional Stock Assessment Workshop, 1994). The recreational catch accounted for approximately 17,000 mt or 72 percent of the combined recreational and commercial catch in 1992. The 1994 Marine Recreational Fisheries Survey estimated that 93 percent of all recreational landings (11,963,000 fish) in that year were taken in state waters.

The FMP was prepared through the joint efforts of the Mid-Atlantic Fishery Management Council (Council) and the Atlantic States Marine Fisheries Commission (ASMFC). It was designed to promote conservation of one of the most important Atlantic coast recreational species. It was approved by the Secretary of Commerce on March 20, 1990. The Council and the ASMFC

developed the FMP to address problems they anticipated could develop if the fishery expanded or the resource declined. Prior to the approval of the FMP there were few harvest regulations in any states, and comprehensive management was non-existent. After adoption of the FMP, all states implemented conservation measures. Annual management measures (e.g., possession limits) are recommended by the ASMFC for state waters and by the Council for the exclusive economic zone (EEZ). The EEZ measures include a permit requirement for individuals conducting a commercial fishery, a possession limit of 10 fish that could be adjusted from 0 to 15 fish in order to reflect stock conditions, a limit on commercial catch of 20 percent of the total overall catch, and a framework that allowed for the imposition of commercial fishery controls including state quotas when the commercial limit is exceeded.

As part of the President's plan for reform of the Federal regulatory system, NMFS proposes to remove the bluefish implementing regulations. Since the ASMFC already adopted an Interstate Fishery Management Plan for Atlantic Bluefish, the Magnuson Act regulations implementing the Federal Fishery Management Plan (FMP) for the Atlantic Bluefish Fishery are unnecessarily duplicative. Withdrawal of the FMP is consistent with National Standard 7, which requires that management measures shall, where practicable, minimize costs and avoid unnecessary duplication.

Furthermore, because the fishery takes place primarily in state waters, the ASMFC is an appropriate authority for management. If future management measures in the EEZ are required, the Atlantic Coastal Act allows the states to request NMFS to implement complementary measures in the EEZ.

The Atlantic Coastal Act requires that an interstate fishery management plan contain a recommendation to the Secretary regarding measures to be implemented in the EEZ before he can undertake action. The Council and ASMFC have been working on a plan amendment, which could be modified by ASMFC to specify EEZ management measures that could be implemented under the Atlantic Coastal Act. NMFS does not intend to withdraw the FMP until NMFS issues regulations for the EEZ under the Atlantic Coastal Act.

Classification

This proposed rule has been determined to be not significant for purposes of E.O. 12866.

NMFS prepared a draft EA for this action that discusses the impact on the environment as a result of this rule. A copy of the EA may be obtained from NMFS (see **ADDRESSES**).

The Assistant General Counsel for Legislation and Regulation of the Department of Commerce certified to the Small Business Administration that this proposed rule, if adopted, would not have a significant economic impact on a substantial number of small entities, because the number affected is less than 20 percent of the number of small entities operating in the fishery.

List of Subjects for 50 CFR Part 628

Fishing, Reporting and recordkeeping requirements.

Dated: March 21, 1996.

Gary Matlock,

Program Management Officer, National Marine Fisheries Service

For the reasons set out in the preamble, under the authority of 16 U.S.C. 1801 *et seq.*, 50 CFR part 628 is proposed to be removed.

[FR Doc. 96–7513 Filed 3–27–96; 8:45 am]

BILLING CODE 3510–22–F

---

50 CFR Parts 656 and 697

[Docket No. 950915230–6080–02; I.D. 022796D]

RIN 0648–AH57

Atlantic Striped Bass Fishery; Atlantic Coastal Fisheries Cooperative Management; Consolidation and Revision of Regulations

AGENCY: National Marine Fisheries Service (NMFS), National Oceanic and Atmospheric Administration (NOAA), Commerce.

ACTION: Proposed rule; request for comments.

SUMMARY: NMFS proposes consolidation of regulations pertaining to the Atlantic striped bass and weakfish fisheries, which are now contained in two CFR parts, into a single part. The consolidated regulations would be revised to be more concise, better organized, and easier for the public to use. In addition, certain prohibitions and definitions currently in parts 656 and 697 would be removed and replaced by references to general sections of the regulations to achieve conformity and to eliminate unnecessary regulatory text. This action is part of the President's Regulatory Reinvention Initiative.

DATES: Comments must be received by April 29, 1996.

ADDRESSES: Comments should be sent to Tom Meyer, Office of Fisheries Conservation and Management, F/CM1, National Marine Fisheries Service, 1335 East-West Highway, Silver Spring, MD 20910.

FOR FURTHER INFORMATION CONTACT: Tom Meyer, (301) 713–2337.

SUPPLEMENTARY INFORMATION:

NMFS proposes to remove 50 CFR part 656 and revise 50 CFR part 697 by consolidating into part 697 the regulations previously contained in parts 656 and 697. Duplicative regulatory text previously contained in parts 656 and 697 would be eliminated.

In March 1995, President Clinton issued a directive to Federal agencies regarding their responsibilities under his Regulatory Reinvention Initiative. This initiative is part of the National Performance Review and calls for immediate, comprehensive regulatory reform. The President directed all agencies to undertake an exhaustive review of all their regulations, with an emphasis on eliminating or modifying those that are obsolete, duplicative, or otherwise in need of reform. This proposed rule is intended to carry out the President's directive with respect to the regulations implementing the Atlantic Coastal Fisheries Cooperative Management Act (16 U.S.C. 5101 *et seq.*) and the Atlantic Striped Bass Conservation Act Appropriations Authorization (16 U.S.C. 1851 note).

The consolidation and revisions proposed in this rule are not meant to change the substance of the existing regulations. They are intended to make the regulations easier for the public to use and to reduce the volume and publication costs of the regulations.

In addition, some of the prohibitions and definitions currently in parts 656 and 697 would be removed. Instead, the consolidated part 697 would reference definitions and general prohibitions to be contained in 50 CFR part 600 regulations; part 600 is also being proposed for consolidation and revision through another rulemaking. The reference to standard language, rather than the language now contained in parts 656 and 697, could result in some changes in how the Atlantic striped bass and weakfish regulations are enforced. The intent of the proposed changes is to achieve consistency of language, enhance understanding of the regulation's requirements, and to eliminate unnecessary regulatory text.

Classification

This proposed rule has been determined to be not significant for the purposes of E.O. 12866.

The Assistant General Counsel for Legislation and Regulation of the Department of Commerce certified to the Chief Counsel for Advocacy of the Small Business Administration that this proposed rule, if adopted, would not have a significant economic impact on a substantial number of small entities. The proposed consolidation is not meant to change the substance of the existing regulations. Proposed revisions to definitions and prohibitions could result in minor changes in how the regulations are enforced, but are not expected to change fishing practices, costs, or revenues. As a result, a regulatory flexibility analysis was not prepared.

List of Subjects in 50 CFR Parts 656 and 697

Fisheries, Fishing.

Dated: March 21, 1996.

Gary Matlock,

Program Management Officer, National Marine Fisheries Service.

For the reasons set out in the preamble, 50 CFR chapter VI is proposed to be amended as follows:

PART 656—[REMOVED]

1. Under the authority of 16 U.S.C. 1851 note, part 656 is removed.

2. Part 697 is revised to read as follows:

PART 697—ATLANTIC COASTAL FISHERIES COOPERATIVE MANAGEMENT

Sec.
697.1 Purpose and scope.
697.2 Definitions.
697.3 Relation to the Magnuson Act.
697.4 Civil procedures.
697.5 Specifically authorized activities.
697.6 Prohibitions.

Authority: 16 U.S.C. 1851 note, 5101 *et seq.*

§ 697.1 Purpose and scope.

The regulations in this part implement section 804(b) of the Atlantic Coastal Fisheries Cooperative Management Act, 16 U.S.C. 5101 *et seq.*, and section 6 of the Atlantic Striped Bass Conservation Act Appropriations Authorization, 16 U.S.C. 1851 note, and govern fishing in the EEZ on the Atlantic Coast for species covered by those acts.

§ 697.2 Definitions.

In addition to the definitions in § 600.10 of this chapter, the terms in this part have the following meanings:

Atlantic striped bass means members of stocks or populations of the species *Morone saxatilis* found in the waters of the Atlantic Ocean north of Key West, FL.

Block Island Southeast Light means the aid to navigation light located at Southeast Point, Block Island, RI, and defined as follows: Located at 40°09.2'N. lat., 71°33.1'W. long; is 201 ft (61.3 m) above the water; and is shown from a brick octagonal tower 67 ft (20.4 m) high attached to a dwelling on the southeast point of Block Island, RI.

Continuous transit means that a vessel remains continuously underway while in the EEZ.

Fish, when used as a verb, for the purposes of this part, means any activity that involves:

(1) The catching, taking, or harvesting of fish;

(2) The attempted catching, taking, or harvesting of fish;

(3) Any other activity that can reasonably be expected to result in the catching, taking, or harvesting of fish; or

(4) Any operations at sea in support or, or in preparation for, any activity described in paragraph (1), (2), or (3) of this definition.

Land means to begin offloading fish, to offload fish, or to enter port with fish.

Montauk Light means the aid to navigation light located at Montauk Point, NY, and defined as follows: Located at 41°04.3'N. lat., 71°51.5'W. long.; is shown from an octagonal, pyramidal tower, 108 ft (32.9 m) high; and has a covered way to a dwelling.

Point Judith Light means the aid to navigation light located at Point Judith, RI, and defined as follows: Located at 41°21.7'N. lat., 71°28.9'W. long.; is 65 ft (19.8 m) above the water; and is shown from an octagonal tower 51 ft (15.5 m) high.

Retain means to fail to return Atlantic striped bass or weakfish to the sea immediately after the hook has been removed or the fish has otherwise been released from the capture gear.

Weakfish means members of the stock or population of the species *Cynoscion regalis*, found along the Atlantic coast from southern Florida to Massachusetts Bay.

§ 697.3 Relation to the Magnuson Act.

The provisions of sections 307 through 311 of the Magnuson Act, as amended, regarding prohibited acts, civil penalties, criminal offenses, civil forfeitures, and enforcement apply with respect to the regulations in this part, as if the regulations in this part were issued under the Magnuson Act.

§ 697.4 Civil procedures.

The civil procedure regulations at 15 CFR part 904 apply to civil penalties, permit sanctions, seizures, and forfeitures under the Atlantic Striped Bass Act and the Atlantic Coastal Act, and the regulations in this part.

§ 697.5 Specifically authorized activities.

NMFS may authorize, for the acquisition of information and data, activities that are otherwise prohibited by the regulations in this part.

§ 697.6 Prohibitions.

(a) *Atlantic Coast weakfish fishery*. In addition to the prohibitions set forth in § 600.725, the following prohibitions apply. It is unlawful for any person to do any of the following:

(1) Fish for weakfish in the EEZ.

(2) Harvest any weakfish from the EEZ.

(3) Possess any weakfish in or from the EEZ.

(4) Fail to return to the water immediately, with the least possible injury, any weakfish taken within the EEZ.

(b) *Atlantic striped bass fishery*. It is unlawful for any person to do any of the following:

(1) Fish for Atlantic striped bass in the EEZ.

(2) Harvest any Atlantic striped bass from the EEZ.

(3) Possess any Atlantic striped bass in or from the EEZ, except for the following area: The EEZ within Block Island Sound, north of a line connecting Montauk Light, Montauk Point, NY, and Block Island Southeast Light, Block Island, RI; and west of a line connecting Point Judith Light, Point Judith, RI, and Block Island Southeast Light, Block Island, RI. Within this area, possession of Atlantic striped bass is permitted, provided no fishing takes place from the vessel while in the EEZ and the vessel is in continuous transit.

(4) Fail to return to the water immediately, with the least possible injury, any Atlantic striped bass taken within the EEZ.

[FR Doc. 96–7517 Filed 3–27–96; 8:45 am]

BILLING CODE 3510–22–F

Notices

Federal Register
Vol. 61, No. 61
Thursday, March 28, 1996

This section of the FEDERAL REGISTER contains documents other than rules or proposed rules that are applicable to the public. Notices of hearings and investigations, committee meetings, agency decisions and rulings, delegations of authority, filing of petitions and applications and agency statements of organization and functions are examples of documents appearing in this section.

DEPARTMENT OF AGRICULTURE

Submission for OMB Review; Comment Request

March 22, 1996.

The Department of Agriculture has submitted the following information collection requirement(s) to OMB for review and clearance under the Paperwork Reduction Act of 1995, Public Law 104–13. Comments regarding these information collections are best assured of having their full effect if received within 30 days of this notification. Comments should be addressed to: Desk Officer for Agriculture, Office of Information and Regulatory Affairs, Office of Management and Budget (OMB), Washington, DC 20503 *and* to Department Clearance Officer, USDA, OIRM, Ag Box 7630, Washington, DC 20250–7630. Copies of the submission(s) may be obtained by calling (202) 720–6204 or (202) 720–6746.

Food and Consumer Service

- *Title:* WIC Program Regulations—Reporting and Recordkeeping Burden.

Summary: The WIC Program provides nutrition benefits to low income women, infants, and children. It is administered by State and local governments. Benefits are obtained through retail vendor, home delivery, and direct distribution systems.

Need and Use of the Information: The information reporting and recordkeeping burdens addressed are necessary to ensure appropriate and efficient distribution and management of WIC funds as authorized by law.

Description of Respondents: Individuals or households; Business or other for-profit; Not-for-profit institutions; State, Local, or Tribal Government;

Number of Respondents: 7,053,455.

Frequency of Responses: Recordkeeping; Reporting: Semi-annually, Annually.

Total Burden Hours: 1,372,042.

Food and Consumer Service

- *Title:* Study of WIC Participant and Program Characteristics, 1996.

Summary: Study will describe selected characteristics of WIC participants, local agencies, and state agencies.

Need and Use of the Information: Data from the study will be used to prepare the mandated congressional report and to manage the WIC Program.

Description of Respondents: State, Local, or Tribal Government.

Number of Respondents: 488.

Frequency of Responses: Reporting: Bienially.

Total Burden Hours: 229.

Rural Utilities Service

- *Title:* Seismic Safety Of New Building Construction.

Summary: Information is required to ensure that Rural Utilities Service and Rural Telephone Bank borrowers and grant recipients; inform architects, engineers, and contractors retained by such borrowers and grant recipients of the seismic safety requirements applicable to building construction projects.

Need and Use of the Information: Information is needed to clarify seismic safety requirements applicable to Rural Utility Service borrowers and grant recipients and inform architects, engineers, and contractors retained by RUS borrowers and grant recipients of seismic safety requirements applicable to building construction projects.

Description of Respondents: Business or other for-profit.

Number of Respondents: 100.

Frequency of Responses: Reporting: On occasion.

Total Burden Hours: 200.

Larry K. Roberson,

Deputy Departmental Clearance Officer.

[FR Doc. 96–7571 Filed 3–27–96; 8:45 am]

BILLING CODE 3410–01–M

ARCHITECTURAL AND TRANSPORTATION BARRIERS COMPLIANCE BOARD

Telecommunications Act Accessibility Guidelines for Customer Premises Equipment and Telecommunications Equipment

AGENCY: Architectural and Transportation Barriers Compliance Board.

ACTION: Notice of intent to establish advisory committee.

SUMMARY: The Architectural and Transportation Barriers Compliance Board (Access Board) announces its intent to establish a Telecommunications Access Advisory Committee (Committee) to develop accessibility guidelines under the Telecommunications Act of 1996 and requests applications from interested organizations for representatives to serve on the Committee. The Committee will make recommendations to the Access Board on accessibility guidelines for telecommunications equipment and customer premises equipment.

DATES: Applications should be received by April 29, 1996.

ADDRESSES: Applications should be sent to the Office of Technical and Information Services, Architectural and Transportation Barriers Compliance Board, 1331 F Street, NW., suite 1000, Washington, D.C. 20004–1111. Fax number (202) 272–5447. Applications may also be sent via electronic mail to the Access Board at the following address: cannon@access-board.gov.

FOR FURTHER INFORMATION CONTACT: Dennis Cannon, Office of Technical and Information Services, Architectural and Transportation Barriers Compliance Board, 1331 F Street, NW., suite 1000, Washington, D.C. 20004–1111. Telephone number (202) 272–5434 extension 35 (Voice); (202) 272–5449 (TTY). Electronic mail address: cannon@access-board.gov. This document is available in alternate formats (cassette tape, braille, large print, or computer disc) upon request.

SUPPLEMENTARY INFORMATION: On February 8, 1996, the President signed the Telecommunications Act of 1996. The Architectural and Transportation Barriers Compliance Board (Access Board) is responsible for developing accessibility guidelines in conjunction

with the Federal Communications Commission under section 255(e) of the Act for telecommunications equipment and customer premises equipment.[1]

The term ''telecommunications equipment'' is defined as equipment, other than customer premises equipment, used by a carrier to provide telecommunications services, and includes software integral to such equipment (including upgrades). Public Law 104–104, section 3(a)(2)(50). The term ''customer premises equipment'' is defined as equipment employed on the premises of a person (other than a carrier) to originate, route, or terminate telecommunications. Public Law 104–104, section 3(a)(2)(38).

The Telecommunications Act requires the accessibility guidelines to be issued within 18 months after the date of enactment. The Board is also required to review and update the guidelines periodically. The Board's guidelines for telecommunications equipment and customer premises equipment are required to principally address the access needs of individuals with disabilities affecting hearing, vision, movement, manipulation, speech, and interpretation of information.

The Senate report to the Telecommunications Act directs the Board to develop its guidelines by involving parties affected by the law. ''The Committee expects that manufacturers of equipment and providers of service will be fully included in this process.'' S. Rept. 104–23, at 53. Throughout the process of developing its guidelines, the Access Board, in conjunction with the Federal Communications Commission, intends to coordinate and consult with representatives of individuals with disabilities and interested telecommunications equipment and service providers to ensure that their concerns and interests are given full consideration in the rulemaking process.

The Access Board will begin the process of developing the accessibility guidelines by establishing a Telecommunications Access Advisory Committee. The establishment of the Committee is in the public interest and will support the agency in performing its duties and responsibilities under the Telecommunications Act of 1996. The Access Board believes that the Committee will facilitate the involvement of individuals with disabilities and telecommunications equipment and service providers in the development of the guidelines.

The Committee will make recommendations to the Access Board on issues such as:

- Types of equipment to be covered by the guidelines;
- Barriers to the use of such equipment by persons with disabilities affecting hearing, vision, movement, manipulation, speech, and interpretation of information;
- Solutions to such barriers, if known, categorized by disability (different solutions may be needed for different disabilities) and research on such barriers; and
- Contents of the guidelines.

The Committee will be expected to present a report with its recommendations to the Access Board within six months of the Committee's first meeting. The Access Board requests applications from organizations representing the following interests for membership on the Committee:

- Manufacturers of telecommunications equipment and customer premises equipment;
- Manufacturers and developers of peripheral devices or specialized customer premises equipment commonly used by individuals with disabilities to achieve access;
- Organizations representing the access needs of individuals with disabilities affecting hearing, vision, movement, manipulation, speech, and interpretation of information;
- Telecommunications providers and carriers;
- Developers of telecommunications software; and
- Other persons affected by these accessibility guidelines.

The number of Committee members will be limited to effectively accomplish the Committee's work and will be balanced in terms of interests represented. Organizations with similar interests are encouraged to nominate a single organization to represent their interest. Although the Committee will be limited in size, there will be opportunities for the public to present written information to the Committee, participate through the Internet and to comment at Committee meetings.

Applications should be sent to the Access Board at the address listed at the beginning of this notice. The application should include a statement of the organization's interests and the name, title, address and telephone number of the person who would represent the organization on the Committee. The application should also describe the person's qualifications, including any experience the person has had with making telecommunications equipment and customer premises equipment accessible to individuals with disabilities.

Committee members will not be compensated for their service. The Access Board may pay travel expenses for a limited number of persons who would otherwise be unable to participate on the Committee. Committee members will serve as representatives of their organizations, not as individuals. They will not be considered special government employees and will not be required to file confidential financial disclosure reports.

After the applications have been reviewed, the Access Board will publish a notice in the Federal Register announcing the appointment of Committee members and the first meeting of the Committee. The first meeting of the Committee is tentatively scheduled for June 10–12, 1996 in Washington, D.C. The Committee will operate in accordance with the Federal Advisory Committee Act, 5 U.S.C. app 2. Committee meetings will be held in Washington, D.C. Each meeting will be open to the public. A notice of each meeting will be published in the Federal Register at least fifteen days in advance of the meeting. Records will be kept of each meeting and made available for public inspection.

Judith E. Heumann,

Chairman, U.S. Architectural and Transportation Barriers Compliance Board.

[FR Doc. 96–7583 Filed 3–27–96; 8:45 am]

BILLING CODE 8150–01–P

[1] The Access Board is an independent Federal agency established by section 502 of the Rehabilitation Act of 1973, as amended, whose primary mission is to promote accessibility for individuals with disabilities. The Access Board consists of 25 members. Thirteen are appointed by the President from among the public, a majority of who are required to be individuals with disabilities. The other twelve are heads of the following Federal agencies or their designees whose positions are Executive Level IV or above: The Departments of Health and Human Services, Education, Transportation, Housing and Urban Development, Labor, Interior, Defense, Justice, Veterans Affairs, and Commerce; General Services Administration; and United States Postal Services.

DEPARTMENT OF COMMERCE

International Trade Administration

[A–583–009]

Color Television Receivers, Except for Video Monitors, From Taiwan; Amended Final Results of Antidumping Duty Administrative Review

AGENCY: Import Administration, International Trade Administration, Department of Commerce.

ACTION: Notice of amendment to final results of antidumping duty administrative review.

SUMMARY: On July 11, 1995, in the case of *Zenith Electronics Corporation et. al.* v. *United States (Zenith),* Consolidated Court No. 89–01–00011, the United States Court of International Trade (the Court) affirmed the Department of Commerce's (the Department) results of redetermination on remand of the results of the second administrative review of the antidumping duty order on color television receivers, except for video monitors (CTVs), from Taiwan.

EFFECTIVE DATE: March 28, 1996.

FOR FURTHER INFORMATION CONTACT: Maureen McPhillips or John Kugelman, Office of Antidumping Compliance, Import Administration, U.S. Department of Commerce, 14th Street and Constitution Avenue, N.W., D.C. 20230, telephone: (202) 482–5253.

SUPPLEMENTARY INFORMATION

Background

On March 11, 1995, the Court ordered the Department to correct the clerical error resulting from the Department's failure to convert the amounts for Tatung's foreign inland freight expense from New Taiwan dollars to U.S. dollars before deducting this expense from the U.S. price. Pursuant to the Court's instructions, the Department corrected this clerical error and filed its redetermination on remand with the Court on June 26, 1995. On July 11, 1995, the Court affirmed the Department's results of redetermination on remand.

Final Results of Remand

As a result of the Department's conversion of the expense for Tatung's foreign inland freight from New Taiwan dollars to U.S. dollars, we have determined that the weighted-average dumping margin for Tatung for the period April 1, 1985 through March 31, 1986 is 2.18 percent.

Accordingly, the Department will determine, and the Customs Service will assess, antidumping duties on the appropriate entries of Tatung. The Department will issue appraisement instructions directly to the Customs Service.

This amendment of final results of review and notice are in accordance with section 751(f) of the Tariff Act of 1930, as amended (19 U.S.C. 1673 (d)) and 19 CFR 353.28(c).

Dated: March 14, 1996.

Susan G. Esserman,

Assistant Secretary for Import Administration.

[FR Doc. 96–7463 Filed 3–27–96; 8:45 am]

BILLING CODE 3510–DS–M

[A–122–820 (Lead Case Number); A–122–822; A–122–823]

Certain Corrosion-Resistant Carbon Steel Flat Products and Certain Cut-to-Length Carbon Steel Plate From Canada; Final Results of Antidumping Duty Administrative Reviews

AGENCY: Import Administration, International Trade Administration, Department of Commerce.

ACTION: Notice of Final Results of Antidumping Duty Administrative Reviews.

SUMMARY: On August 16, 1995, the Department of Commerce (the Department) published the preliminary results of the administrative reviews of the antidumping duty orders on certain corrosion-resistant carbon steel flat products and certain cut-to-length carbon steel plate from Canada. These reviews cover five manufacturers/exporters of the subject merchandise to the United States and the period February 4, 1993, through July 31, 1994. We gave interested parties an opportunity to comment on our preliminary results. Based on our analysis of the comments received, we have changed the results from those presented in the preliminary results of reviews.

EFFECTIVE DATE: March 28, 1996.

FOR FURTHER INFORMATION CONTACT: John Drury (CCC), Eric Johnson (Dofasco/Sorevco), Stephen Jacques (Manitoba Rolling Mills), Jim Rice (Algoma), Gerry Zapiain (Stelco), or Jean Kemp, Office of Agreements Compliance, Import Administration, International Trade Administration, U.S. Department of Commerce, 14th Street and Constitution Avenue, N.W., Washington, D.C. 20230; telephone: (202) 482–3793.

SUPPLEMENTARY INFORMATION:

Background

On August 16, 1995, the Department published in the Federal Register (60 FR 42511) the preliminary results of the administrative reviews of the antidumping duty orders on corrosion-resistant carbon steel flat products and certain cut-to-length carbon steel plate from Canada (58 FR 44162, August 19, 1993). The Department has now completed these administrative reviews in accordance with section 751 of the Tariff Act of 1930, as amended (the Act).

Applicable Statute and Regulations

Unless otherwise stated, all citations to the statute and to the Department's regulations are references to the provisions as they existed on December 31, 1994.

Scope of this Review

The products covered by these administrative reviews constitute two separate ''classes or kinds'' of merchandise: (1) certain corrosion-resistant steel and (2) certain cut-to-length plate.

The first class or kind, certain corrosion-resistant steel, includes flat-rolled carbon steel products, of rectangular shape, either clad, plated, or coated with corrosion-resistant metals such as zinc, aluminum, or zinc-, aluminum-, nickel- or iron-based alloys, whether or not corrugated or painted, varnished or coated with plastics or other nonmetallic substances in addition to the metallic coating, in coils (whether or not in successively superimposed layers) and of a width of 0.5 inch or greater, or in straight lengths which, if of a thickness less than 4.75 millimeters, are of a width of 0.5 inch or greater and which measures at least 10 times the thickness or if of a thickness of 4.75 millimeters or more are of a width which exceeds 150 millimeters and measures at least twice the thickness, as currently classifiable in the Harmonized Tariff Schedule (HTS) under item numbers 7210.31.0000, 7210.39.0000, 7210.41.0000, 7210.49.0030, 7210.49.0090, 7210.60.0000, 7210.70.6030, 7210.70.6060, 7210.70.6090, 7210.90.1000, 7210.90.6000, 7210.90.9000, 7212.21.0000, 7212.29.0000, 7212.30.1030, 7212.30.1090, 7212.30.3000, 7212.30.5000, 7212.40.1000, 7212.40.5000, 7212.50.0000, 7212.60.0000, 7215.90.1000, 7215.90.5000, 7217.12.1000, 7217.13.1000, 7217.19.1000, 7217.19.5000, 7217.22.5000, 7217.23.5000, 7217.29.1000, 7217.29.5000, 7217.32.5000, 7217.33.5000, 7217.39.1000, and 7217.39.5000. Included are flat-rolled products of nonrectangular cross-section where such cross-section is achieved subsequent to the rolling process (*i.e.*, products which have been worked after rolling)—for example, products which have been beveled or rounded at the edges. Excluded are flat-rolled steel products either plated or coated with tin, lead, chromium, chromium oxides, both tin and lead (''terne plate''), or both

chromium and chromium oxides (''tin-free steel''), whether or not painted, varnished or coated with plastics or other nonmetallic substances in addition to the metallic coating. Also excluded are clad products in straight lengths of 0.1875 inch or more in composite thickness and of a width which exceeds 150 millimeters and measures at least twice the thickness. Also excluded are certain clad stainless flat-rolled products, which are three-layered corrosion-resistant carbon steel flat-rolled products less than 4.75 millimeters in composite thickness that consist of a carbon steel flat-rolled product clad on both sides with stainless steel in a 20%–60%–20% ratio. These HTS item numbers are provided for convenience and Customs purposes. The written description remains dispositive.

The second class or kind, certain cut-to-length plate, includes hot-rolled carbon steel universal mill plates (*i.e.*, flat-rolled products rolled on four faces or in a closed box pass, of a width exceeding 150 millimeters but not exceeding 1,250 millimeters and of a thickness of not less than 4 millimeters, not in coils and without patterns in relief), of rectangular shape, neither clad, plated nor coated with metal, whether or not painted, varnished, or coated with plastics or other nonmetallic substances; and certain hot-rolled carbon steel flat-rolled products in straight lengths, of rectangular shape, hot rolled, neither clad, plated, nor coated with metal, whether or not painted, varnished, or coated with plastics or other nonmetallic substances, 4.75 millimeters or more in thickness and of a width which exceeds 150 millimeters and measures at least twice the thickness, as currently classifiable in the HTS under item numbers 7208.31.0000, 7208.32.0000, 7208.33.1000, 7208.33.5000, 7208.41.0000, 7208.42.0000, 7208.43.0000, 7208.90.0000, 7210.70.3000, 7210.90.9000, 7211.11.0000, 7211.12.0000, 7211.21.0000, 7211.22.0045, 7211.90.0000, 7212.40.1000, 7212.40.5000, and 7212.50.0000. Included are flat-rolled products of nonrectangular cross-section where such cross-section is achieved subsequent to the rolling process (*i.e.*, products which have been worked after rolling)—for example, products which have been beveled or rounded at the edges. Excluded is grade X–70 plate. These HTS item numbers are provided for convenience and Customs purposes. The written description remains dispositive.

The periods of review (POR) are February 4, 1993, through July 31, 1994.

VAT Tax Methodology

In light of the Federal Circuit's decision in *Federal Mogul* v. *United States*, CAFC No. 94–1097, the Department has changed its treatment of home market consumption taxes. Where merchandise exported to the United States is exempt from the consumption tax, the Department will add to the U.S. price the absolute amount of such taxes charged on the comparison sales in the home market. This is the same methodology that the Department adopted following the decision of the Federal Circuit in *Zenith* v. *United States*, 988 F. 2d 1573, 1582 (1993), and which was suggested by that court in footnote 4 of its decision. The Court of International Trade (CIT) overturned this methodology in *Federal Mogul* v. *United States*, 834 F. Supp. 1391 (1993), and the Department acquiesced in the CIT's decision. The Department then followed the CIT's preferred methodology, which was to calculate the tax to be added to U.S. price by multiplying the adjusted U.S. price by the foreign market tax rate; the Department made adjustments to this amount so that the tax adjustment would not alter a ''zero'' pre-tax dumping assessment.

The foreign exporters in the *Federal Mogul* case, however, appealed that decision to the Federal Circuit, which reversed the CIT and held that the statute did not preclude Commerce from using the ''*Zenith* footnote 4'' methodology to calculate tax-neutral dumping assessments (*i.e.*, assessments that are unaffected by the existence or amount of home market consumption taxes). Moreover, the Federal Circuit recognized that certain international agreements to which the United States is a party, in particular the General Agreement on Tariffs and Trade (GATT) and the Tokyo Round Antidumping Code, required the calculation of tax-neutral dumping assessments. The Federal Circuit remanded the case to the CIT with instructions to direct Commerce to determine which tax methodology it will employ.

The Department has determined that the ''*Zenith* footnote 4'' methodology should be used. First, as the Department has explained in numerous administrative determinations and court filings over the past decade, and as the *Federal Circuit* has now recognized, Article VI of the GATT and Article 2 of the Tokyo Round Antidumping Code required that dumping assessments be tax-neutral. This requirement continues under the new Agreement on Implementation of Article VI of the General Agreement on Tariffs and Trade. Second, the URAA (Uruguay Round Administrative Action) explicitly amended the antidumping law to remove consumption taxes from the home market price and to eliminate the addition of taxes to U.S. price, so that no consumption tax is included in the price in either market. The Statement of Administrative Action (p. 159) explicitly states that this change was intended to result in tax neutrality.

While the ''*Zenith* footnote 4'' methodology is slightly different from the URAA methodology, in that section 772(d)(1)(C) of the pre-URAA law required that the tax be added to United States price rather than subtracted from home market price, it does result in tax-neutral duty assessments. In sum, the Department has elected to treat consumption taxes in a manner consistent with its longstanding policy of tax-neutrality and with the GATT.

Analysis of Comments Received

We gave interested parties an opportunity to comment on the preliminary results. We received comments and rebuttal comments from Algoma Steel Inc. (Algoma), Continuous Colour Coat (CCC), Dofasco Inc./Sorevco, Inc. (Dofasco), Manitoba Rolling Mills (MRM), Stelco Inc. (Stelco), exporters of the subject merchandise, (respondents), and from Bethlehem Steel Corporation, U.S. Steel Group a Unit of USX Corporation, Inland Steel Industries, Inc., Gulf States Steel Inc. Of Alabama, Sharon Steel Corporation, Geneva Steel, and Lukens Steel Company, petitioners. At the request of petitioners, the Department held a hearing on September 29, 1995.

Algoma

Comment 1: Algoma argues that the Department's margin program fails to weight-average all appropriate ''most similar'' matches where there is no identical home market sale to match to a U.S. sale. Algoma's contention is that the computer program ignores all but the last possible ''most similar'' match, and then matches that individual similar home market sale to the U.S. sale. Respondent argues that the Department should modify the program so the appropriate ''most similar'' matches are weight-averaged prior to comparison to a U.S. sale.

Department's Position: The Department agrees with respondent. It is our standard practice to weight-average the most similar matches and we have corrected our calculations for the final results accordingly.

Comment 2: Algoma produces subject merchandise on two rolling mills, a 166″ mill and a 106″ mill. Algoma reported rolling costs only for the 166'' mill, citing the limitations of its accounting system and other factors. Petitioner disagrees with this methodology, and objects to the Department's use of certain information presented by Algoma to the Department at verification. Petitioner's and respondent's arguments regarding the various aspects of this issue, as well as the Department's positions, are found below.

Petitioners contend that even though Algoma acknowledges producing subject merchandise on its 106″ plate mill, it did not submit this mill's cost information as part of its response to the Department's COP/CV questionnaire, but rather, only submitted cost information for its 166″ plate mill. Petitioners argue that Algoma failed to provide actual manufacturing cost information as required by the Department's instructions. Compounding this failure to report all relevant production costs, petitioners contend that Algoma's presentation of new factual information regarding the 106″ mill at verification was improper and untimely. Petitioners argue that the deadline for submitting new information was March 7, 1994, a full six weeks prior to the presentation of this new information at verification. In addition, it is argued that the Department's practice, as explained in *Calcium Aluminate Cement, Cement Clinker and Flux from France,* 59 FR 14136, 14140 (1994) has been to not permit the submission of new information at verification (other than minor corrections). Petitioners also cite *Mechanical Transfer Presses from Germany,* 59 FR 9958 (1994), *Photo Albums and Filler Pages from Korea,* 50 FR 43754 (1985) and *Steel Wire Rope from Taiwan,* 56 FR 46288 (1991).

Moreover, petitioners state that even if the Department does accept this new information, the information provided is of no use because it is based upon total production costs of the mill, not just the costs of producing the subject merchandise. As a result, the utility of this information is minimal, as there is no way, in the view of petitioners, to verify that the production costs of subject merchandise associated with the 106″ mill are lower than the production costs of the 166″ mill, as suggested by Algoma.

Because Algoma did not provide actual production costs as requested in the Department's questionnaire, and did not notify either petitioners or the Department of its failure to use its actual production costs, petitioners argue that the Department should apply total best information available (BIA). Short of that, petitioners suggest that since the 106″ mill produces plate with a gauge less than 3/8″ and less that 96″ in width, all home market sales of material meeting these two physical criteria be deemed to be sold at below cost, and since a valid constructed value comparison would also be impossible, all matching identical and similar U.S. sales should be treated as BIA and be presumed to have been sold at below cost.

Concerning petitioners' contention that Algoma failed to report costs in accordance with the Department's questionnaire, Algoma asserts that it properly calculated a rolling cost for subject merchandise. Algoma contends that because its cost accounting system does not attribute costs of a particular process directly to different gauges of steel, it calculated the average cost per ton of the cost center producing the vast preponderance of the subject merchandise and attributed these costs to individual products. Algoma also argues that it possesses no records that would permit direct calculation of costs incurred at the 106″ mill that relate only to subject merchandise.

Algoma argues that, as demonstrated at verification, the average rolling cost on the 106″ mill is significantly less than that of the 166″ plate mill, thus Algoma used the most conservative approach possible in determining the average rolling cost for subject merchandise. Algoma further argues that this cost information was an appropriate subject of verification. Finally, Algoma cites *Replacement Parts for Self-Propelled Bituminous Paving Equipment from Canada,* 58 FR 15481 (1993) and *Floral Trade Council of Davis Cal.* v. *U.S.* 775 F. Supp 1492, 1499 (CIT 1991) for the proposition that the Department may request information at any time during a proceeding. Thus Algoma disagrees with petitioner's allegations that Algoma's ''Comparison of Costs'' exhibit was new factual information presented at verification. Algoma considers this to be documentation supporting the accuracy and reasonableness of the information submitted and the methodologies employed by Algoma in preparing its questionnaire responses.

Finally, Algoma also takes exception to petitioner's suggestion that the Department resort to total BIA if it determines that Algoma's reported rolling cost data is not appropriate or reasonable. Algoma asserts that petitioners themselves acknowledge that the data available to Algoma pertaining to the 106″ strip mill would not have been an appropriate basis for a COP response. Algoma believes that the approach it has adopted has been reviewed and verified by the Department, and represents a reasonable and conservative approach to account for the rolling costs that were incurred on the 106″ mill.

Department's Position: We agree with respondents. Algoma has two rolling mills: a 166″ mill and a 106″ mill. While the 166″ mill produces only subject merchandise, only a very small percentage of the merchandise produced on the 106″ mill is subject merchandise (the rest being strip products too narrow to be included in the scope of this order). Further, an ''overwhelming majority'' of subject merchandise is produced on the 166″ mill. The Department verified that Algoma could not separate the costs to produce different gauges of steel on the 106″ mill, thus it could not specifically identify the cost to produce subject merchandise on that mill. Therefore, because subject merchandise produced on the 106″ mill is a small percentage of the total quantity of subject merchandise produced, and because the average COP of the 106″ mill is lower than the average of the 166″ mill, the Department finds that it was reasonable for Algoma to use the COP of the 166″ mill as the basis for the COP of all subject merchandise.

Algoma's reporting of rolling costs incurred at only one of its two manufacturing facilities is reasonable, considering (1) the nature of its cost accounting system, (2) Algoma's verified inability to determine specific rolling costs based upon the gauge of the material being manufactured at either facility, and (3) the conservative methodology adopted by Algoma. Algoma stated, and the Department verified, that Algoma is not capable of specifically determining direct calculation of rolling costs incurred at the unreported mill on a basis that would capture costs solely of subject material (which represents a small percentage of that rolling mill's production). The alternative methodology used by Algoma is reasonable.

The Department verified the soundness and reasonableness of Algoma's methodology of calculating rolling costs for all subject merchandise. As stated in the Department's verification report ''Algoma demonstrated that costs at the 166″ (plate mill) were significantly higher than at the 106″ (strip) mill.'' Therefore, this information indicates that the use of the 166″ mill costs was conservative.

The Department also notes, as did petitioners, that rolling cost data from the 106″ strip mill was of limited utility because it is based upon total production costs and not just the costs of rolling the subject merchandise. Because of the limitations of Algoma's cost accounting system, this rolling cost data would have been an inappropriate basis for determining rolling costs for subject merchandise produced on the 106″ strip mill.

In addition, the Department does not consider the rolling mill costs associated with the 106″ strip mill we examined at verification to be new information. The Department's responsibility at verification is to verify the accuracy and completeness of the questionnaire response. In this case, Algoma had clearly stated on the record that the rolling costs it submitted to the Department, for a variety of reasons, reflected only those costs incurred at the 166″ plate mill. Therefore, by verifying all the information available which pertained to the 106″ strip mill, the Department was merely verifying the reasonableness and accuracy of a methodology Algoma had already reported.

Petitioners' citation to *Calcium Aluminate Cement, Cement Clinker and Flux from France* is not relevant here because that case refers to the presentation of new factual information and the Department's treatment of such information with regard to statutory deadlines. In this case, the new information at issue represents the type of supporting documentation which the Department routinely reviews during the course of a verification.

Petitioners reference to *Mechanical Transfer Presses from Germany* is not relevant here because in that instance, the respondent submitted unsolicited post-verification information which it was unable to provide during the actual verification. Petitioners also cite to *Photo Album and Filler Pages from Korea* and *Steel Wire Rope from Taiwan* to support their argument that new information presented at verification is unacceptable because such acceptance precludes the Department from a reasonable and thorough analysis of the information and denies petitioners their right to comment on such information prior to its acceptance. Again, however, the Department finds that the information reviewed at verification was not new information, but rather simply documentation supporting Algoma's contention that it was unable to report meaningful cost data on one particular rolling mill, that the vast majority of subject merchandise was produced on that mill and that the other mill's costs were significantly lower.

Finally, the Department agrees with Algoma that costs associated with movement to the 106″ mill and with coiling and uncoiling were properly included in the average 106″ mill costs which were compared to the 166″ mill costs at verification.

Regarding petitioner's recommendation that the Department apply total BIA or, alternatively, partial BIA to material meeting the gauge and width criteria of subject merchandise rolled on the 106″ strip mill, the Department finds that BIA is not appropriate in this circumstance where the respondent has provided complete information for the mill producing the vast majority of the subject merchandise and supporting documentation for its reported cost.

Comment 3: Petitioners object to Algoma's May 5, 1995, changes to its reported scrap revenue data. Petitioners contend that this new information is not supported by any verification documentation and is inconsistent with existing verification exhibits, and no Departmental request for a recalculation of scrap revenue exists on the record. Petitioners also argue that this new information is untimely.

Petitioners further note that although the Department did request that Algoma submit a revised cost tape following verification, the Department did not solicit any corrections regarding Algoma's reported scrap revenue data. Petitioners allege that Algoma submitted this new information without disclosing it to either petitioners or the Department. Petitioners contend that this inclusion of unsolicited data is improper and is in violation of 19 CFR 353.31(a)(i), which sets a deadline of seven days prior to verification for the submission of unsolicited factual information. Petitioners urge the Department to base its margin calculations on verified data only, citing *Light-Walled Welded Rectangular Carbon Steel Tubing from Argentina* (54 FR 13913), in which the Department was requested by respondent to verify a significant quantity of new information. In addition, in that case, respondent submitted an unsolicited revised response after the preliminary determination. All these factors resulted in the Department's use of total BIA because of the uncertainty of the veracity of the respondent's information.

Algoma contends that all the changes made by Algoma pursuant to the post-verification tape were disclosed to the Department. As explained at verification, Algoma identified a correction for yield loss for Algoma's No. 1 shearing line and reported this correction to the Department at the beginning of verification. This correction increased the calculated generation of scrap, which in turn increased the resulting scrap revenue data as a simple mathematical function (i.e., the higher the yield loss figure, the greater the amount of scrap that is generated and sold or recycled into the production cycle). Respondent holds that this is not ''new information.''

Algoma also contends that petitioners' allegation that this scrap revenue data is inconsistent with the cost verification exhibits and cannot be the product of the yield loss correction is without merit. According to Algoma, petitioners do not understand the scrap revenue calculation and the verification document they cite contains the erroneous data which Algoma later corrected. Algoma adds that petitioners' contention that all product categories should have been revised is incorrect, because only one particular line was affected by this correction.

Department's Position: We agree with respondent that the post-verification submission of information related to yield loss (based upon errors disclosed at the beginning of verification) and the resultant change in scrap revenue does not constitute new information, and is not a violation of 19 CFR 353.31(a)(i).

On April 28, 1995, Algoma filed a ''Corrections Memorandum'' with the Department, which indicated the errors Algoma discovered in its response during the process of preparing for its COP/CV verification. One of the errors discovered was an error in its calculation of yield loss for one of Algoma's production lines. The error, as verified by the Department, involved an understatement of yield loss, which Algoma corrected, pursuant to the Department's instructions following verification. As a result of this correction, in which the yield loss factor was increased, Algoma discovered that as a function of the yield loss correction scrap revenue was increased because the increased yield loss automatically increased the amount of imputed scrap generated, and thus increased Algoma's scrap revenue figure. For Algoma to have acted otherwise (i.e., to have corrected only the yield loss data without having corrected subsequent derivative information) would have been to knowingly submit erroneous data to the Department, and the Department would have had to request a correction.

In addition, petitioners' reference to *Light-Walled Welded Rectangular Carbon Steel Tubing from Argentina* is

not directly relevant to this proceeding because the nature and extent of the respondents' revisions to their responses in that case (at verification and following the preliminary determination) are far in excess of any additional or new information presented by Algoma in the course of this administrative review.

Comment 4: Petitioners allege that Algoma submitted incorrect revised yield loss data for each of its general product categories, as the result of having based its calculation on the wrong yield loss per ton value. Petitioners contend that the correct way to calculate yield loss is to use the value of the loss at each production stage, in order to ensure that the total yield loss value actually reflects the value of the tonnage lost at each stage of production. According to petitioner, Algoma valued the tonnage lost at each production stage before it entered that production process, resulting in an understatement of the value of the total yield loss.

In addition, petitioners argue that Algoma's revised yield loss data is not supported by any documentation and that there is insufficient information on the record to correct for the understated yield loss values. Therefore, petitioners contend that to correct Algoma's misreported yield data, the Department should increase the yield loss amounts for Algoma's other product categories, as reported in their March 27, 1995 cost tape, to correspond to the increase reported by petitioners in their rebuttal brief.

Algoma argues that its revised yield loss figures are correct and that petitioners' arguments are based upon a misunderstanding of the methodology used by Algoma. Apparently, petitioners assume that the variable HRMYLD (plate rolling mill yield loss) contains not just the value of raw materials lost in later processes, but also reflects yield loss of labor and overhead costs added by later processes. In fact, the HRMYLD figure contains only losses in raw material (slab) value that is caused by product waste in downstream processes. Other yield losses are reported as labor, variable overhead, or fixed overhead losses. This reporting methodology was necessitated by the Department's requirement that costs be reported on a consistent basis, per ton of finished plate.

Department's Position: We agree with respondent. Through inspection of verification documentation, specifically, the slab-to-finished-plate-processing-cost sheet and Algoma's documentation supporting its calculation of scrap revenues, and the subsequent corrections submitted to the Department, the Department is satisfied that Algoma has properly reported correct yield loss data for its regular sheared plate.

Comment 5: Petitioner contends that Algoma's short-term interest expense was calculated using an incorrect short-term interest income offset. According to petitioners, two of the items used by Algoma to calculate its interest expense do not belong in the calculation because their interest revenues do not represent income earned from short-term investments of the company's working capital. See *Television Receivers, Monochrome and Color from Japan,* 56 FR 56189, 56192 (1991) (*Television Receivers from Japan*).

Specifically, Algoma has failed to demonstrate that there was (1) an ''investment'', (2) that if there was, that it was short-term, and (3) that if there was an investment, that it was related to the current operations of the company. See *Dynamic Random Access Memory Semiconductors of One Megabit and Above from Korea,* 58 FR 15467, 15473 (1993) (*DRAMS from Korea*). Petitioners also cite *Certain Hot-Rolled Carbon Steel flat products, Certain Cold-Rolled Carbon Steel Flat Products, and Certain Cut-to-Length Carbon Steel Plate from Canada,* 58 FR 37099, 37119 (1993), in which a respondent improperly offset interest expense against interest gained from settlement of a tax case.

Algoma asserts that it properly calculated its interest expense. Algoma contends that petitioners have misstated the law, and that the Court of International Trade has held that respondents may offset against interest expense company interest income ''related to the general operations of the firm'' (*Timken Company* v. *United States,* 852 F. Supp. 1040, 1048 (CIT 1994)). Additionally, it is the Department's practice ''to accept a reduction of total interest expense by such short-term interest income because such income is earned from working capital, which by definition is related to manufacturing and sales operations.'' See *Antifriction Bearings (Other Than Tapered Roller Bearings) and Parts thereof from France,* 60 FR 10900, 10925–26 (1995) (*AFBs from France*).

Department's Position: We agree with respondent. Petitioners' citation to *Flat Rolled Steel from Canada* does not apply. In that case, the Department stated only that it agreed with petitioners' point that a manufacturing line's interest expense ''should be included in the cost of production * * *.'' This comment did not address, nor did the Department's response address, the issue of appropriate interest offsets. Petitioners also cite *Television Receivers from Japan* and *DRAMS from Korea.* In *Television Receivers from Japan,* the Department stated that it would allow an offset to interest expense only with interest income from short-term investments of the company's working capital. However, we disagree with petitioners that methodology applies in this review because since that determination was published, the Department has expanded its view of what constitutes an appropriate offset to interest expense. In *DRAMS from Korea,* the Department stated only that such short-term investments must be ''related to the current operations of the company.'' More recently, however, the Department stated in *AFB's from France,* that ''the interest earned on short-term deposits, on advance payments to suppliers, and on late payments is derived from manufacturing and sales operations. The Department's practice is to accept a reduction of total interest expense by such short-term interest income because such income is earned from working capital, which by definition is related to manufacturing and sales operations. Therefore, we accepted the interest offset as reported by SNR.'' In light of these recent decisions of what constitutes an appropriate interest offset, the Department agrees with Algoma that it properly calculated its interest expense and that all its claimed offsets are allowable.

Comment 6: Petitioners contend that some of Algoma's product specifications and suggested model matches are incorrect. According to petitioners, Algoma made several errors in reporting technical properties in its suggested model match, and when corrected, it becomes clear that certain matches are incorrect.

Algoma argues that one of petitioners' proposed revised model matches is correct but that the other suggested match is less accurate than that originally submitted by Algoma, and that Algoma's original model matching hierarchy be used in that case.

Department's Position: The Department agrees with both parties that one model match modification suggested by petitioners is correct, and that model match is reflected in these final results. The Department also agrees with petitioner that the second disputed model match should be modified on the basis of petitioners' proposal, because the basis upon which Algoma determined the model match is not appropriate, according to the model match hierarchy as laid out in the Department's instructions. The Department agrees that the petitioners' proposed model match is a closer match

than that proposed by Algoma on the basis of comparable chemical characteristics. See also the Department's Analysis Memo.

Comment 7: Petitioners allege that Algoma's allocation of indirect selling expenses is incorrect and must be rejected. Specifically, it is alleged that Algoma failed to properly report its indirect selling expenses on a market-specific basis.

In calculating its indirect selling expense factors for each market, Algoma allocated a certain percentage of its indirect selling expenses exclusively to the home market, with the remainder allocated between markets, including its home market, based upon sales to the home market as a percentage of total sales. Algoma claimed it cannot separately identify U.S. specific indirect selling expenses from expenses related to other markets. Algoma's records indicate that these expenses were classified in six cost centers, four of which support sales in all markets and two supporting sales in Canada only. Thus, Algoma allocated the Canadian cost centers to the home market and the other four across all markets.

Petitioners argue that the record clearly indicates that there are market-specific selling expenses that Algoma could have reported on a market-specific basis (e.g., the ''U.S. Sales Department'') which Algoma combined with its indirect selling expenses to all markets. Petitioners argue that only the percentage of indirect selling expenses properly identified by Algoma as relating to the home market should be used in the calculation of home market indirect selling expenses, citing *Steel Jacks from Canada,* 50 FR 42577 (1985), wherein the Department denied respondent's allocation methodology because it was unable to provide any evidence separating certain selling expenses by product and market.

Algoma argues that its allocation of indirect selling expenses is correct given the constraints of its normal business procedures. As explained by Algoma in submissions and at verification, the ''U.S. Sales Department'' is, in fact, a misnomer. During the POR, this department consisted of one employee, who also had other responsibilities beyond those associated with sales to the United States. In addition, sales to the United States were also handled by other personnel. Consistent with this reality, Algoma does not treat this department as a separate cost center in the normal course of business and demonstrated this at verification. Instead, Algoma distinguishes between the costs of selling in the home market, and all other selling costs to all other markets, and costs in this second category are not, and cannot be, broken out among specific countries.

Department's Position: We agree with respondent. The Department verified each of Algoma's indirect selling cost centers, and we confirmed that although Algoma does maintain some information specific to home market, United States, and ''off-Shore'' sales (quantity, cost of sales, etc.), it does not maintain specific information on selling expenses for each of these three markets. Instead, it maintains some indirect selling expense information only for home market sales while other indirect selling expense information cannot be broken out by market. The former group was only attributed to the home market, while the latter was allocated over all three markets (home market, U.S., and off-shore). Thus the Department is satisfied that Algoma has allocated these indirect selling expenses as specifically as possible given the limitations of its business records. In addition, *Steel Jacks from Canada* is not applicable here because in that case, respondent was not able to demonstrate that these indirect selling expenses related ''solely to sales in the Canadian market.'' In the case of Algoma, it has been able to identify and separate Canada-specific indirect selling expenses from ''other market'' selling expenses, and within the confines of Algoma's financial accounting system, has properly allocated its indirect selling expenses among all appropriate markets.

Comment 8: Petitioners allege that the margin program incorrectly defines U.S. Direct Expense (USDIREXP), and that it fails to include deductions for U.S. Duty and Brokerage expenses. In addition, the commission offsets are incorrectly defined. Algoma agrees with petitioners, and requests that the Department correct these errors in the final results of review.

Department's Position: We agree with both parties, and the corrections are reflected in the Department's final results.

CCC

Comment 9: In its response to the Department's questionnaire concerning the Model Match, CCC did not provide complete physical characteristics data for all sales. Petitioners assert that the Department erred in accepting incomplete data from respondent on physical characteristics for sales in both the U.S. and home markets. Petitioners further state that the use of these missing variables for the purposes of the model match is inconsistent with past practice and contrary to existing statute. Specifically, petitioners assert that 19 U.S.C 1677(16) requires comparisons with identical physical characteristics and that the Department's practice is not consistent with that requirement. In addition, petitioners believe that the methodology violates 19 U.S.C. 1677b(a)(4) in that no diffmers are used to adjust for potentially different physical characteristics. Petitioners insist that the Department use BIA in cases where sales are reported with missing physical characteristics values. Petitioners request that the Department apply either a regular second-tier BIA (the highest calculated rate in either the investigation or the review, 18.71%), or the highest non-aberrant margin found on any CCC sale.

Petitioners conclude that the Department must use BIA if the respondent is unable to provide the adequate information. By failing to report full product characteristics for a number of prime home market and U.S. sales, petitioners state that CCC made it impossible to accurately perform the model match with respect to these sales or to determine accurate costs of these products. Petitioners reason that the Department is required to use BIA whenever a party or any other person refuses or is unable to produce information requested in a timely manner and in the form required, or otherwise significantly impedes an investigation. Petitioners recommend that to ensure that respondents are encouraged to provide complete information, the Department should apply to the relevant transactions either the higher of a calculated margin found in the investigation or review, or the highest non-aberrant margin found on any CCC sale.

Respondents state that the law does not require identical matches to mean identical in every respect, and that the Department can make reasonable interpretations of the term ''identical.'' In addition, respondents assert that petitioners have already accepted the proposition that the Department may depart from product matching criteria. To support this assertion, respondents note that the Department used the exact same methodology in its treatment of missing physical characteristics for seconds produced by Dofasco as outlined in a policy paper dated April 19, 1995, and that petitioners did not object to that policy. Respondents claim that the same policy is applicable to CCC.

Respondents also note that CCC is not a steel substrate manufacturer, but purchases substrate from others, and as such does not know many of the characteristics of the underlying

substrate. In particular, CCC contends that substrate purchased from service centers often lacked specific physical characteristic information and that CCC was unable to obtain said information. CCC argues that its customers are unconcerned with many of the characteristics of the steel substrate which underlies its coated steel products.

Department's Position: We disagree with Petitioners. The Department has the authority to determine what merchandise qualifies as such or similar for the purposes of the statute. *United Engineering & Forging* v. *United States,* 779 F. Supp. 1375, 1380–82 (CIT 1991); *NTN Bearing Corp.* v. *United States,* 747 F. Supp. 726, 735–36 (CIT 1990); *Kerr-McGee Chem. Corp.* v. *United States,* 741 F. Supp. 947, 951–52 (CIT 1990); *Monsanto Co.* v. *United States,* 698 F. Supp. 275, 277–278 (CIT 1988); *Timken Co.* v. *United States* (Timken I), 630 F. Supp. 1327, 1338 (CIT 1986).

The market for the specific products manufactured by CCC is unlike the market for other corrosion-resistant steel products in certain respects. Because CCC's specialized customers are unconcerned with certain characteristics of the steel, CCC has no need to record those characteristics. Moreover, unlike other respondents, CCC does not manufacture steel substrate. Rather, it either paints or galvanizes substrate purchased from other sources. Therefore, for those sales with missing product characteristics, CCC does not possess, or cannot obtain, all of the product characteristics requested in the Department's model match criteria, since some of the criteria in question are only available to the original manufacturer of the substrate. Most importantly, however, because both CCC's U.S. and home market customers are unconcerned with the missing characteristics, there is no reason those characteristics should be used to determine which sales should be compared. Finally, the Department verified that the missing characteristics are not random in nature. Rather, CCC could not report specific sets of characteristics depending upon the type of seller of the original substrate (e.g. steel service centers). As such, the Department determines that any given set of missing characteristics in a sale are the result of a purchase from a particular type of seller of the substrate and not as a result of ''selective reporting'' by the respondent.

In light of the circumstances contained in this review, we believe that the Department's decision to accept a modified matching hierarchy for some sales is proper. The Department is using a similar modified hierarchy for the purposes of comparing certain of Dofasco's such or similar merchandise, in the same administrative review of carbon steel flat products from Canada. Specifically, the methodology used by the Department for CCC is similar to that used for the comparison of non-prime merchandise manufactured by a Dofasco (*See* Department of Commerce Memorandum, A–100–003, of April 19, 1995; ''For those respondents unable to report the same product characteristics for seconds in both markets, the Department could simply drop the missing characteristics and compare products based on the same characteristics reported in both markets.''). As with the market for CCC's coated products, the Department determined that the market for non-prime merchandise was highly specialized, and that, therefore, the standard hierarchy would require parties to report irrelevant characteristics (of which they were unlikely to maintain records) and would produce inappropriate matches. No interested party raised objections to the methodology for matching non-prime merchandise.

In its sales verification, the Department noted that CCC used available information to report type, process, metal, coating weight, thickness, width, and form. In addition, it reported quality, strength, temper rolling, and tension leveling for input coils purchased from Stelco. Stelco provided the reported information requested by CCC. During the verification, the Department confirmed that CCC did not possess the four characteristics previously mentioned for coil purchased from suppliers other than Stelco.

Petitioners cite the *Timken* case as support for their contention that the Department is compelled to use BIA in this case. However, the case in question differs from *Timken* in regard to the facts. In *Timken*, the court directed the Department to collect additional home market sales data from a previous review period which had already been completed. When it requested the additional data, the Department found that the company under review had already disposed of all of its home market data for the period and was unable to provide the necessary information, necessitating the use of BIA. Unlike the situation in *Timken*, CCC did not dispose of the relevant data, but rather had no reason to ever maintain such data. Thus, the use of BIA in this case is not warranted.

Comment 10: Petitioners protest the use of certain slitting expenses incurred by CCC in U.S. sales as an addition to Foreign Market Value. Petitioners claim that the Department should instead deduct the expenses from U.S. price. Petitioners cite 19 U.S.C. § 1677a(d)(2)(A), stating that ''the statute requires that additional costs, charges and expenses incident to bringing the merchandise from the place of shipment in the country of exportation to the United States shall be deducted from U.S. price.''

Department's Position: We disagree with Petitioners. Both CCC and Dofasco had U.S. sales which were slit in the U.S. by unrelated slitters. In both cases, the Department considered the sales to be purchase price sales, and not exporter sales price sales. The slitters in question were unrelated to the companies being reviewed. However, there were slight differences between CCC and Dofasco in terms of the structure of transactions performed by unrelated slitter. In the case of Dofasco, the customer designates the slitter to be used. The slitter invoices Dofasco, which then adds the amount of the charge, noted on a separate line of the invoice, to the price that it charges the customer for the un-slit steel. By contrast, CCC, chooses the slitter, which is a single non-related U.S. company. Furthermore, CCC does not separate the charges but instead includes them in the overall sales price. CCC finalizes the price prior to shipment into the U.S. and maintains a record of the expense charged to it by the slitter.

As a result, the Department simply disregarded the price for the slitting when identifying the price charged by Dofasco. For CCC, however, the slitting expense is a circumstance of sale expense for which the Department must make a circumstance of sale adjustment to FMV under section 773(a)(4).

Petitioners' reliance on section 772(d)(2)(A) is unwarranted. That provision deals with the deduction from USP of movement and related expenses (such as freight, brokerage, handling and port charges). Although the slitting expense was incurred prior to delivery to the customer, that fact alone does not make the expense a movement expense subject to 772(d)(2)(A).

Comment 11: Petitioners object to the Department's price adjustment methodology regarding credit and debit notes for sales in both the U.S. and Canadian markets. Specifically, Petitioners believe that the Department should not allocate such adjustments over multiple sales. Instead, the Department should tie said adjustments directly to specific sales and use BIA when these expenses cannot be tied to specific sales.

Respondents contend that both the Department's policy and various court decisions do not allow for the allocation of such expenses to unspecified invoices. In the case of CCC, however, respondent notes that the adjustments in question are directly related to a specific group of invoices. Therefore, the credit and debit notes are directly related to a set of sales, rather than one sale in particular or to all sales. As such, they meet the criteria of the Department for direct expenses.

Department's Position: While the Department prefers that discounts, rebates and other price adjustments be reported on a transaction-specific basis, the Department has long recognized that some price adjustments are not granted on that basis, and thus cannot be reported on that basis. However, the Department disagrees with CCC's argument that the debits and credits at issue were not granted on a transaction-specific basis. CCC issued the adjustments when a customer over- or under-paid a specific transaction. By including several invoices on the debit or credit note, CCC allocated the debit or credit over the transactions included on the note. Consequently, the debits and credits are transaction-specific but not invoice-specific.

Nevertheless, the Department does not agree with petitioners that this methodology is sufficient to warrant treatment of the adjustments as indirect expenses in the home market (or application of BIA in the U.S. market), under the policy discussed in *Antifriction Bearings (and Parts Thereof) from France,* 58 FR 39729, 39759 (1993), cited by petitioners. In that case, the Department contrasted transaction-specific reporting with customer- or product-specific reporting. In this case, the amount of the ''allocation'' is limited to a few specific transactions, all to the same customer, and typically within a very limited period of time. Thus the danger of allocation, which is the averaging effect on prices, is extremely limited in this case. This case is similar to situations, permitted by the Department as direct adjustments, in which a rebate is granted on a limited number of purchases by a single customer. Because CCC's method of reporting this transaction is reasonable, the Department has allowed it as a direct adjustment.

Dofasco/Sorevco

Comment 12: Respondents claim that the Department improperly reclassified certain home market rebates as post-sale price adjustments in the preliminary results. Dofasco states that, contrary to the Department's assertion, the record shows that the buyer was aware of the conditions to be fulfilled and the approximate amount of the rebates at the time of sale. Respondents also claim that there are no factual differences between the investigation and this administrative review concerning Dofasco's rebates. Finally, respondents assert that the antidumping law was never intended to be so rigid that memoranda or customer letters would be an insufficient basis to show previous knowledge. Therefore, Dofasco says that the Department should classify all of its home market rebates as rebates.

Petitioners assert that respondents have failed in each case to substantiate these home market rebates. For the first type of rebate, petitioners claim that respondents have stated for the record that in the majority of cases, documentation which the Department requested to illustrate ''that their customer knew the conditions and terms of each rebate granted to the customer before the time of the sale'' did not exist. Furthermore, even in the minority of cases where some documentation exists, such evidence does not demonstrate the necessary facts for the Department to classify such expenses as rebates. Likewise, for the other two types of rebates, the documentation Dofasco presents as evidence is, according to petitioners, insufficient proof that the customers were aware of the terms of sale and the amount of the rebates at or before the time the sale was made.

Department's Position: We agree with petitioners. First, the evidence to which respondents have pointed in their case brief in no way demonstrates that Dofasco's customers had knowledge of the terms and conditions of the rebates at or before the time of sale.

For Dofasco-reported REBATE1H, respondents have referred to an internal Dofasco memorandum stating the terms of the rebate for a future period. Respondents argue that, while this internal memorandum ''may not constitute explicit customer notice,'' the fact that the customer had been receiving the rebate for some time previously was a clear indication that the customer knew of the rebate prior to sale.

In this case, respondents have implicitly acknowledged the inherent deficiency of this evidence: namely, that the document to which respondents refer is an *internal* memorandum, and thus by its nature cannot serve as evidence of the customer's prior awareness of the terms and conditions of the rebate. While the customer's receipt of this rebate over time may increase the likelihood that the customer may have expected to continue to receive this rebate, such a condition reflects at most the probability that Dofasco's ''rebate'' policy in this case represented its normal business practice. However, it does not constitute the customer's awareness of the rebate at or prior to the time of the sale.

Furthermore, respondents explicitly acknowledged during verification that ''the majority of its rebate and pricing negotiations are completed over the phone and little written communication is exchanged between Dofasco and the customer.'' *See* Dofasco Sales Verification Report (May 5, 1995), at pg. 24. In fact, for REBATE1H we found no written communication proving prior customer awareness. In this respect, Dofasco's reference to the hand written notation in the example provided in their case brief is unpersuasive. Even presuming the individual in question is employed by the customer (for which we have no evidence), there is no indication when (or whether) the document was sent to the individual.

With regard to Dofasco-reported REBATE2H, respondents have also failed to provide adequate evidence proving prior customer awareness for the example cited. The letters from the customer to Dofasco to which respondents refer in their case brief show nothing about what the customer knew at the time of the sale. Finally, concerning Dofasco-reported REBATE3H, Dofasco's evidence suffers the same defect as REBATE1H: that is, the 1992 document provided as an attachment to respondents' case brief is an internal memorandum which fails entirely in proving the customer's prior awareness.

Second, the Department takes issue with respondents' claim that there are ''no factual differences between the investigation and this administrative review'' concerning Dofasco's rebates. In fact, it is precisely the factual, documentary difference between the LTFV investigation and this administrative review which has led the Department to its decision to disallow the treatment of these ''rebates'' as rebates for the Department's purposes. In the LTFV investigation, Dofasco was able to produce a certain type of document (an Allowance Approval Page) which proved that the customer was aware of the terms and conditions of these rebates at or before the time the sale was made. See, *Dofasco's Response to Sections B, C, and E of the Department's Questionnaire,* October 20, 1992, Appendix B–4. This

Allowance Approval Page is absent from the record of this review.

Finally, concerning respondents' assertion that the antidumping law was never intended to be so rigid that memoranda or customer letters would be an insufficient basis to show previous knowledge, we stress that the Department's requirements in this regard are not arbitrary. The purpose of requiring respondents to prove that the buyer was aware of the conditions to be fulfilled and the approximate amount of the rebates at the time of the sale is to protect against manipulation of the dumping margins by a respondent once it learns that certain sales will be subject to review. See *Antifriction Bearings (other than Tapered Roller Bearings) and Parts Thereof from France (AFBs),* 60 FR 10900, 10930 (February 28, 1995), which notes that the purpose of the rebate rule is to ''prevent respondents, after they realize that their sales will be subject to administrative review, from granting rebates in order to lower dumping margins on particular sales.'' Hence, in order to circumvent any such *ex post facto* downward adjustments of foreign market value, the Department has established the evidentiary requirement of ''prior knowledge''. Therefore, the Department disallows these ''rebates'' as Departmentally-defined rebates for the period of review.

Comment 13: Petitioners argue that the Department should not treat Dofasco's home market rebates as post-sale price adjustments, because the Department has indicated that post-sale price adjustments are generally corrections to the price resulting from clerical or other data input errors. Moreover, petitioners assert that such a reclassification undermines the Department's policy of requiring a respondent to demonstrate that the rebate is justified. Therefore, petitioners conclude that Dofasco's claimed adjustments must be denied. Additionally, petitioners assert that even if the Department adjusts for Dofasco's rebates, it should not directly adjust for two types of ''rebates'' because Dofasco reported these on a customer-specific basis, and not on a transaction or product-specific basis.

Respondents argue that, even if the Department does not accept Dofasco's ''rebates'' as rebates (as defined by the Department), it must at a minimum accept them as post-sale price adjustments, since they reflect a respondent's normal business practice. Regarding the two types of ''rebates'' allegedly reported on a customer-specific basis, Dofasco claims that the Department verified that these rebates have been reported for each customer on a product-specific basis.

Department's Position: We agree in part with respondents. While petitioners have asserted that post-sale price adjustments are ''generally corrections to the price resulting from clerical or other data input errors,'' they have failed to note that in the case from which they cite, the Department also allowed post-sale price adjustments which were *not* data input errors, because they reflected the respondent's ''normal business practice.'' See *AFBs* at 10930. As Dofasco has argued, the post-sale price adjustments in this instance do reflect its normal business practice. The Department reviewed numerous documents at verification which confirmed this, and petitioners have not suggested otherwise. Additionally, although documentation regarding the administration of these ''rebates'' for this administrative review differs from the LTFV investigation, their existence since the beginning of the investigation indicates that the use of these ''rebates'' reflects Dofasco's normal business practice. Nevertheless, in *AFBs* (at 10929), the Department stated that ''as a general matter, the Department only accepts claims for discounts, rebates and price adjustments as direct adjustments to price if actual amounts are reported for each transaction.'' The Department discovered at verification that for certain customers, for two types of Dofasco's claimed rebates (REBATE1H and REBATE2H), ''Dofasco totaled the value of specific credit notes issued to a customer and allocated them over sales to that customer.'' Furthermore, Dofasco demonstrated at verification that it had ''allocated rebates for a number of customers because the credit notes did not specify the invoices on which Dofasco granted the credit, and company officials noted that the invoicing department did not always identify correctly the specific product on which the credit was being granted.'' See *Verification Report* at 22. Thus, it is clear that these adjustments have often not been made on a transaction-specific basis, and the Department will, accordingly, treat them as indirect selling expenses for certain customers.

Finally, the Department disagrees with petitioners' assertion that reclassification undermines the Department's policy with respect to rebates. Rebates typically may be granted as a fixed and constant percentage of sales. The Department's policy is to treat them as direct adjustments if they are reported on that basis. *AFBs* at 10929. By contrast, post-sale price adjustments are usually granted on a transaction-by-transaction basis and, to qualify as direct adjustments, may only be reported on that basis.

Comment 14: Respondents state that the Department's preliminary results give the wrong impression concerning Dofasco's sales of secondary merchandise. Dofasco claims that it has informed the Department ''since the beginning of the LTFV investigation'' that it cannot properly identify all the product characteristics of secondary merchandise. Thus, Dofasco objects to the Department's alleged inference that Dofasco represented as accurate information certain product characteristics of its secondary merchandise.

Petitioners did not comment on this issue.

Department's Position: The Department has not stated at any time in this review that Dofasco has attempted to represent as complete information certain reported product characteristics for its sales of secondary merchandise. The evidence on the record of this review repeatedly confirms that Dofasco has consistently maintained it is unable to properly identify the product characteristics in question. See, *e.g., Response of Dofasco Inc. to Sections IV & V of the Department of Commerce's Antidumping Administrative Review Questionnaire,* pp. 15–17 of Section IV, (November 14, 1994); *Supplemental Response of Dofasco Inc. to Section III, IV, and V of the Department of Commerce's Antidumping Administrative Review Questionnaire,* pp. 21–25 (December 23, 1994); and *Response of Dofasco Inc. to Section III, IV, and V of the Department of Commerce's Antidumping Administrative Review Supplemental Questionnaire,* pg. 6 (February 22, 1995). Furthermore, the Department explicitly verified respondents' contention through a thorough review of Dofasco's records regarding secondary merchandise. See *Sales Verification Report* (May 5, 1995), pp. 8–10. The preliminary results of review merely confirm that the Department performed its model match on these six product characteristics (see also the Department's April 19, 1995 memorandum on secondary merchandise).

Comment 15: Respondents claim that the Department employed a methodology for adjusting for taxes which artificially inflates margins. Dofasco notes that 19 U.S.C. 1677a(d) (1988) of the statute requires the Department to adjust U.S.P. to take into account taxes that are levied upon

foreign market sales, but that are rebated or not collected upon export sales. Respondents argue that because the Department's tax methodology violates the United States' international obligation by increasing or creating dumping margins, the Department should adopt the tax-adjustment methodology upheld by the Court of Appeals in *Federal Mogul Corp.* v. *United States (Federal Mogul),* 94–1097, –1104, at 20–21 (Fed. Cir. Aug. 28, 1995). Dofasco claims that the Court of Appeals specifically held that this U.S.P. tax-adjustment methodology is in accordance with the United States' international agreements and is reasonable.

Petitioners assert that respondents have improperly characterized the *Federal Mogul* opinion, and furthermore, that Dofasco's proposed alternative methodology would ''artificially *deflate* the amount of cash deposits'' (emphasis added). First, petitioners claim that the Court supported the Department's methodology in *Federal Mogul* as consistent with the express statutory language and ''not an unreasonable position.'' Petitioners add that, even if the results are contrary to certain GATT provision, the Court noted in *Federal Mogul* that ''in the event of a conflict between a GATT obligation and a statute, the statute must prevail.'' Therefore, the Court did not order the Department to utilize the methodology in *Federal Mogul* which respondents in this case now advocate. Instead, according to petitioners, the Court allowed the Department discretion to select a tax methodology such as the one used for the preliminary results here.

Second, petitioners argue that the utilization of Dofasco's proposed tax methodology would reduce the estimated duty deposit rate to a level below what it would be if no tax were imposed in the home market. Specifically, petitioners argue that Dofasco's approach, while creating an absolute dumping margin which is tax neutral, would deflate the *ad valorem* margin. Petitioners allege that this significant aspect of the methodology was not addressed by the Court of Appeals in *Federal Mogul,* and that ''no court has ever suggested that it was Congress' intent to *diminish* the amount of cash deposit rate to the detriment of the domestic industries (emphasis original).''

Department's Position: In accordance with *Federal Mogul,* we have changed our VAT methodology (see VAT tax methodology section, above).

Comment 16: Petitioners claim that Dofasco used an improper methodology for calculating its product-specific cost of production (COP), constructed value (CV), and difference in merchandise (difmer) data. Petitioners argue that Dofasco did not calculate its costs using its entire production volume to calculate weighted-average costs per product, but rather used only production for home market sales orders to determine the cost of manufacturing (COM) for COP, and only its production for U.S. sales orders to determine its COM for CV. Furthermore, petitioners claim that Dofasco did not alert the Department in its response concerning its methodology.

Respondents claim that petitioners have misunderstood the cost methodology employed by Dofasco to calculate COP and CV. Respondents state that their calculation methodology is a two-step process. First, Dofasco calculates a per unit production cost based on total production of a Dofasco product. Dofasco then weight-averages all Dofasco products by the Department's control number and by production for sale in a particular market. Dofasco argues that this methodology is in accordance with the statute (19 U.S.C. 1677b(e) (1995) for CV and 19 U.S.C. 1677b(b) (1995) for COP) and in accordance with the Department's questionnaire instructions.

Department's Position: The Department agrees with respondent and considers Dofasco's COP/CV response to be in compliance with the statute and with the Department's questionnaire.

Petitioners' argument that Dofasco used an improper methodology in determining COP and CV for subject merchandise because it does not take into account all of Dofasco's production is incorrect. As documented at verification, Dofasco used costs based on total production (on a control number basis) to determine COP and CV figures.

In addition, as stated in the Department's questionnaire issued to Dofasco, COP represents ''the total cost of production of each product sold in the home market/third country'' and constructed value ''is based upon the costs incurred to produce each product sold in the U.S. market, as if it had been sold in the home market.'' Thus, Dofasco's practice of basing COP and CV on home market sales and U.S. sales respectively is entirely consistent with the Department's practice and intent.

Comment 17: Petitioners claim that Dofasco failed to include third-country production in its weighted-average cost calculations. As a result, according to petitioners, there is no way for the Department to determine accurate product-by-product cost data.

Respondents claim that, as explained in Comment 16 above, the cost of manufacture for each product within a control number is based upon Dofasco's entire production volume of that product, regardless of where each individual production run of that product was sold.

Department's Position: As stated above, the Department verified that Dofasco used costs incurred in its total production (within each CONNUMH and CONNUMU) to determine the COP and CV of subject merchandise. Third country information was only disregarded when Dofasco weight-averaged its costs to determine U.S.-specific CV data and home market-specific COP data.

Comment 18: Petitioners claim that the reliability of Dofasco's COP data is compromised because Dofasco included in its calculations numerous sales orders where there was no cost for slab production, resulting in ''understated'' costs.

Respondents note that, for a small number of products, Dofasco inadvertently has not reported slab costs. Respondents maintain that this was a simple error arising from their presumption that there were no sales in 1994 of steel poured into ingots at Dofasco's ingot mill, which the Department verified had closed in the third quarter of 1993. Respondents argue that petitioners should have informed the Department of this error prior to petitioners' submission of their case brief, and that petitioners' failure to do so was a deliberate attempt to prevent respondents from presenting proof that the actual incidence of missing slab costs is insignificant.

Respondents add that, in the event Dofasco is not allowed the opportunity to correct this obvious error, the Department should adopt Dofasco's proposed methodology to correct this error, which Dofasco claims is adverse because it results in a certain increase in the cost data of all control numbers.

Department's Position: We agree with petitioners in part. Regardless of whether Dofasco's failure to report certain slab costs was an oversight, the Department is obligated to correct such errors. Because of the nature of this error, which prevented the Department from identifying which sales should have included slab costs, the Department has adopted the following methodology: the Department upwardly adjusted Dofasco's reported value for the control number which we verified, utilizing the weighted-average costs of slab production of all sales orders

except those for which slab costs were clearly not included in reported production costs. Then, we applied to all control numbers, for both COP and CV purposes, the percentage difference between the upwardly adjusted value figure and the originally reported value figure as a partial BIA,. Because of the limited nature of this error, and the fact that Dofasco has been cooperative, the Department does not believe that total BIA is appropriate.

Comment 19: Petitioners claim that the problems with Dofasco's cost data, as put forward in comments 16–18 above, also affected the difmer data to the point where such data is inaccurate and unreliable. Petitioners state that the data used to calculate COP, which it claims did not include certain slab cost data, were also used to calculate difmers. Additionally, petitioners argue that the difmers were calculated incorrectly for a significant number of CONNUMs where Dofasco sold the merchandise in both the home and U.S. markets. Finally, petitioners stress that the calculation of accurate difmer data is not possible because Dofasco ignored production for export to third countries in calculating COP, and there is no way to know whether all or only some CONNUMs are affected.

Respondents agree with petitioners that the cost data used to calculate the difmer should be based on both U.S. and home market cost data, but that, due to a programming error, this did not occur in ''a few instances.'' Respondents argue that all the necessary information is currently on the record for the Department to recalculate difmers, and have provided the Department with proposed calculation strings and programming language to correct the data. Therefore, Dofasco asserts that there is no reason for the Department to resort to BIA.

Department's Position: The Department agrees with petitioners that Dofasco's reported difmer data is incorrect. However, the errors are obvious and were brought to the Department's attention in sufficient time for correction. Moreover, as noted by respondent, the Department does possess all the information necessary to correct this data. As a result, the Department corrected this data by using the computer code submitted by respondent. The Department has thoroughly reviewed this language and is satisfied that it fully corrects the difmer data.

Comment 20: Petitioners claim that respondents have under reported general and administrative costs by improperly deducting from its expense two items designated as ''Reversal of Restructuring Costs.'' Petitioners assert that the Department is clear that such prior period reversals are not part of the current year's cost of production. Petitioners argue that the Department should add a certain percentage to Dofasco's COP and CV figures to compensate for this improper calculation.

Respondents argue that petitioners have been ''inconsistent'' on this issue between the LTFV investigation and this review. Respondents claim that, since the Department included the restructuring expenses (as ordinary expenses borne by the entire corporation) in their entirety as part of COP and CV in the LTFV investigation, the Department should now accept a prior period reversal of a portion of those original restructuring estimates. According to Dofasco, this approach would achieve consistency in the Department's treatment of these restructuring expenses, and would also coincide with the Department's ''long-standing practice'' of following the home country's generally accepted accounting principles.

Respondents further argue that petitioners' reliance on *Small Diameter Circular Seamless Carbon and Alloy Steel, Standard, Line and Pressure Pipe from Italy,* 60 FR 31981, 31987 (1995) is misplaced, because in that instance, the respondent attempted to benefit from a reversal during a POI of an expense prior to the POI.

Department's Position: The Department agrees with respondent. In the *Final Determination of Sales at Less Than Fair Value: Certain Hot-Rolled Carbon Steel Flat Products, Certain Cold-Rolled Carbon Steel Flat Products, Certain Corrosion-Resistant Carbon Steel Flat Products, and Certain Cut-to-Length Carbon Steel Plate from Canada* (58 FR 37108), the Department agreed with petitioners that estimated expenditures related to restructuring should have been included in their entirety as part of COP and CV. In the investigation, these expenditures were on Dofasco's financial statements.

In the present review, Dofasco's financial statements include certain partial reversals of those earlier restructuring estimates. In order for the Department to be consistent and abide by its long-standing policy, it must also include these partial reversals in its calculation of COP and CV for Dofasco.

Comment 21: Petitioners note that Dofasco claimed a total of five levels of trade which consisted of distributors, known as service centers, and the following four categories of end-users: automotive, construction, converters, and manufacturers. Petitioners claim that the Department should reject Dofasco's claim that its end-user customers comprised four distinct levels of trade and that Dofasco has not proved distinct selling functions for the reported total of five levels of trade. Petitioners argue that the Department should disallow respondents' claim of different levels of trade within one general category because it is contrary to Departmental practice. Petitioners claim further that any differences pointed to by Dofasco among its purported levels of trade predominantly concern quantities purchased, not function. Petitioners argue that the Department has emphasized in the past that such differences do not warrant distinct level of trade treatment. Finally, petitioners claim that the analysis provided by respondents attempting to show a correlation between price and selling expenses on the one hand and levels of trade on the other is flawed and meaningless. Thus, petitioners state that the Department should allow only two levels of trade: Distributors and end-users.

Respondents note that the Department calculated its dumping margin in the final determination of the LTFV investigation based on its five reported levels of trade, which the Department verified. According to respondents, because the Department has verified these same five levels of trade in this review, and ''*nothing* has changed'' since the investigation regarding Dofasco's levels of trade, a Departmental decision to collapse Dofasco's levels of trade would ''constitute a change of policy * * * from the investigation,'' and that an agency must present an adequate basis for a policy change in such a situation. Moreover, respondents assert that the Department has differentiated among end-users in past cases. Finally, respondents claim that there were no meaningful methodological errors in its analysis of price and selling expenses by trade level, and that the record shows that Dofasco's prices indeed vary by level of trade for each particular product group.

Department's Position: In asking for level of trade information, the Department attempts to determine where in the distribution chain the respondent's customer falls (end-user, distributor, retailer). Thus, ''comparisons are made at distinct, discernible levels of trade based on the function each level of trade performs, such as end-user, distributor, and retailer.'' See *Certain Carbon and Alloy Steel Wire Rod from Canada* (''*Wire Rod from Canada*''), 59 FR 18791, 18794 (April 20, 1994) (Import Administration Policy Bulletin 92/1 (July 29, 1992)).

In this case, Dofasco has reported separate levels of trade among four types of end-users: that is, Dofasco claims that, while all four types of end-users occupy the same spot on the distribution chain, the differences among these end-users are significant enough that the Department would be mistaken to conduct its model match if they were aggregated into one end-user level.

However, the Department normally disallows a respondent's claim of different levels of trade within one general category. See *Disposable Pocket Lighters from Thailand*, 59 FR at 53415, and *Disposable Pocket Lighters from Thailand*, 60 FR 14263, 14264 (final determination) (March 16, 1995). We note that, in its divisions among end-users, the only characteristics of each of these end-users about which Dofasco uniformly informed the Department were quantities and the customer's end-products. This represents the type of information which the Department highlighted as being inadequate in *Wire Rod from Canada* (59 FR at 18794).

In this respect, the Department notes that Dofasco has referred to a case (*Limousines from Canada*, 55 FR 11036, 11039 (1990)), in which two end-users were differentiated due to differences in volume purchased, lower prices, and different sales resources. With regard to quantities purchased, it is noteworthy that the decision in *Limousines from Canada* predates *Wire Rod from Canada* by four years, and as such does not reflect current Department policy with regard to quantities purchased. Moreover, there is no discussion on the record of this review confirming price differentials among construction, converter, and manufacturing end-users. Finally, regarding sales resources, the Department found at verification that Dofasco's construction and manufacturing customers are served by the same sales division, and Dofasco has not set up a sales division to service only its converter customers as it has done, for example, for its automotive customers.

Dofasco also points to *Stainless Steel Bar from Spain*, in which Dofasco maintains that ''the Department separated end-user customers into two levels of trade because the characteristics of those customers were significantly different.'' See *Stainless Steel Bar from Spain*, 59 FR 66931, 66937 (December 28, 1994). In fact, in its discussion Dofasco omitted a crucial distinction between the end-users in the case of *Stainless Steel Bar from Spain*: namely, one set of end-users purchased through one distribution channel (direct from factory), while the other group of end-users made its purchases through a different distribution channel (from related service centers).

Nevertheless, Dofasco did report significantly more information regarding its sales to the automotive industry than it has for its sales to converters and manufacturers. This information includes a differentiated sales process (through a wholly-owned subsidiary), early vendor involvement, the presence of long-term requirements contracts, and generally lower prices. Together, such distinct and discernible functions represent exactly the sort of evidence which serves to distinguish sales to automotive manufacturers from sales to other customers, notwithstanding petitioners' contention regarding the methodological integrity of Dofasco's analysis of price and selling expenses. Moreover, the Department acknowledged in its questionnaire the uniqueness of automotive manufacturers as steel industry customers. Specifically, the computer field CUSTOMER CATEGORY/LEVEL OF TRADE (CUSTLOT) stated that respondents should ''(s)how a different code for each of the basic types of customers to whom you sell the merchandise, *e.g.*, auto manufacturers, steel service centers, etc...'' (emphasis added).

Finally, with regard to Dofasco's assertion that a Departmental decision to collapse Dofasco's levels of trade would constitute a change of policy from the investigation, and that ''an agency must present an adequate basis for a policy change'' (see *British Steel, Plc* v. *United States*, 879 F. Supp. 1254, 1307 (Ct. Int'l Trade 1995), citing *Secretary of Agric.* v. *United States*, 347 U.S. 645, 653–54, 74 S.Ct. 826, 832, 98 L.Ed. 1015 (1954)), the LOT issue addressed in this review was not brought to the Department's attention in the investigation and the Department is not precluded from making a determination on that issue in this administrative review. Neither petitioners nor respondents briefed the issue in the investigation. Each segment of a proceeding (*e.g.* investigations and review) forms a separate administrative record about which parties may raise issues before the Department and seek judicial review.

The Court's decision in *British Steel, Plc* v. *United States* cited by respondents is inapposite to the present case. The British Steel decision addressed a situation where the Department changed an explicitly stated policy between two segments of a proceeding. The issues raised by Petitioners in this proceeding concern the proper treatment of LOT in light of the facts presented and the Department's current policy.

Consequently, in accordance with standard practice, the Department has determined that Dofasco's three reported levels of trade ''construction'', ''converter'', and ''manufacturer'' are combined into one end-user level of trade. We have treated the automotive sector as a separate level of trade for the following reasons: a differentiated sales process (through a wholly-owned subsidiary), early vendor involvement, the presence of long-term requirements contracts, and generally lower prices.

Comment 22: Petitioners assert that, for one term of sale, the Department should include freight revenue to Dofasco in gross unit price and should deduct reported freight rates. Petitioners note that Dofasco did not supply actual freight rates, and that Dofasco acknowledged that in certain cases it did not pay the same amount for freight as the amount charged by Dofasco to its customers. Therefore, petitioners claim that the Department should add freight paid in certain sales, and deduct reported minimum freight for that destination in the home market, and add freight paid in certain United States sales while deducting maximum freight for that destination. Additionally, petitioners claim that an adjustment should also be made to net price for the purposes of the cost test, but that the application of the maximum freight rate (instead of the minimum) should be used as BIA.

Respondents argue that the Department properly accepted the freight amounts charged to Dofasco's customers for one term of sale. First, respondents state that there existed no requirement that Dofasco report actual freight charges. According to respondents, such a requirement would have imposed an unreasonable burden. Second, respondents stress that the Department has no reason to believe that the amounts charged to Dofasco's customers for these sales do not ''reasonably approximate'' Dofasco's actual freight expenses. Finally, respondents assert that petitioners have not indicated how differences between reported freight expenses and minimum/maximum freight rates charged are in any way significant.

Department's Position: In reporting its freight expenses, Dofasco Inc. has used an allocative methodology because, as the Department verified, the carrier invoices Dofasco for this term of sale for a group of shipments, as opposed to individual sales orders. Because (1) it would impose a heavy burden on respondents to report actual freight charges; (2) the terms of the

questionnaire did not prohibit the use of an appropriate allocative methodology in determining freight expenses; and (3) the Department has consistently allowed the use of reasonable allocative methodologies in reporting freight expenses (See, *e.g., Small Diameter Circular Seamless Carbon and Alloy Steel, Standard, Line and Pressure Pie from Italy,* 60 FR 31981, 31987 (June 19, 1995), and *Oil Country Tubular Goods from Korea* (''*OCTG from Korea*''), 60 FR 33561, 33563 (June 28, 1995)), the Department agrees with respondent that respondent's use of allocations for the values reported for freight expense, (*i.e.*, the amounts charged by Dofasco to its customers) is acceptable and we determine that the use of this allocation methodology does not cause inaccuracies or distortions.

Nevertheless, the Department notes that Dofasco reported and the Department verified: (1) The amount Dofasco charged its customer on the invoice and the amount the customer paid Dofasco; and (2) the minimum freight rate charged by the carrier to Dofasco per destination for the home market, the maximum freight rate charged by the carrier to Dofasco per destination for the United States market, and the actual amount Dofasco paid the carrier. The reported minimum freight rates charged by the carrier to Dofasco in the home market reflect the minimum amount to be deducted from foreign market value. Therefore, the Department verified that Dofasco would have lowered its FMV (thereby lowering its margin) had it been able to report actual freight charged by the carrier to Dofasco, because the Department verified that in fact, Dofasco was always charged a higher rate by the carrier in the home market. Similarly, the reported maximum freight rates charged by the carrier to Dofasco in the U.S. market reflect the maximum amount to be deducted from U.S. price. Hence, the Department verified that Dofasco would have raised its USP (thereby lowering its margin) had it been able to report actual freight charged by the carrier to Dofasco, because the Department verified that in fact, Dofasco was always charged a lower rate by the carrier in the U.S. market.

The Department verified that differences between reported freight expenses and minimum/maximum freight rates charged are indeed significant (see, *e.g.*, Dofasco Sales Verification Report, May 5, 1995, pg. 21), and thus, contrary to respondents' assertion, the Department has adequate reason to believe that the amounts charged to Dofasco's customers for these sales do not reasonably approximate what Dofasco actually paid the carrier.

Regarding petitioners' claim that an adjustment should also be made to net price for the purposes of determining whether certain sales have been made below the cost of production, but that the application of the maximum freight rate (instead of the minimum) should be used as BIA (thereby increasing the likelihood that a sale would fail the cost test by deducting a greater amount from the sale's gross unit price), the Department agrees with petitioner that some form of BIA should be used. However, petitioners' proposal in this situation, in which Dofasco has cooperated fully with the Department and has provided extensive information for the record of this review, is not appropriate. Petitioners have proposed that the Department adjust upward Dofasco's minimum freight rate per home market destination by the highest percentage difference between minimum and maximum freight rates for any home market destination. Instead, the Department determines that the percentage difference between minimum and maximum freight rates for the most popular home market destination for this term of sale should be used to upwardly adjust minimum freight rates for all home market destinations. The resulting BIA rate shall be applied to upwardly adjust the minimum freight charged to Dofasco by the carrier for home market sales for the purposes of calculating net price for the cost test.

Therefore, for one term of sale, the Department will add freight paid to Dofasco by the customer and deduct reported minimum freight paid by Dofasco to its carrier for that destination in the home market, and add freight paid to Dofasco by the customer while deducting maximum freight paid by Dofasco to its carrier for that destination in the United States.

Comment 23: Petitioners argue that the Department must deduct estimated antidumping duties paid by the respondent or related parties from U.S. price. Section 772(d)(2)(A) states that the purchase price and exporter's sales price shall be reduced by United States import duties. According to petitioners, antidumping duties are ''incident to bringing the subject merchandise from the place of shipment in the country of exportation to the place of delivery in the United States'' and are therefore properly classified as import duties. Furthermore, petitioners claim that antidumping or countervailing duties are considered ''import duties'' in trade laws unless the provision specifically indicates otherwise.

Respondents rebut petitioners' assertion by noting that the Department, the courts, and the U.S. Congress have rejected petitioners' argument. Dofasco stresses that petitioners have cited ''no legal or other authority whatsoever'' to support their argument. Respondents assert that Congress did not intend for the antidumping law to operate in the manner proposed by petitioners; that furthermore, Congress explicitly rejected such a treatment in drafting the Uruguay Round trade negotiations implementing legislation; and that to follow petitioners' proposal would result in a geometric and infinite margin inflation. Additionally, respondents have only paid ''*estimated duty deposits,*'' and not actual antidumping duties. Therefore, respondents claim that the U.S. Court of International Trade has agreed with the Department's practice of refusing to deduct estimated antidumping duty deposits in calculating margins for a given period of review.

Department's Position: While section 772(d(2)(A) requires the deduction of normal ''import duties,'' cash deposits of estimated antidumping duties are not normal import duties, and do not qualify for deduction under section 772. Contrary to petitioners' argument, the CIT in *Federal-Mogul* v. *United States* 813 F. Supp. 856, 872 (CIT 1993), recognized that the actual amounts of normal duties to be assessed upon liquidation are known because they are based upon rates published in the Harmonized Tariff Schedule and the actual entered value of the merchandise. In contrast, deposits of estimated antidumping duties are based upon past dumping margins and may bear little relation to the actual current dumping margin. Thus, the CIT recognized the distinction between estimated antidumping duties and ''normal'' import duties for purposes of section 772(d)(2)(A).

Petitioners' methodology also conflicts with the holding of the CIT in *PQ Corp.* v. *United States,* 652 F. Supp. 724 (CIT 1987), in which the court addressed the issue of deduction of estimated antidumping duties under section 772(d)(2)(A). The court cited with approval the Department's policy of not allowing estimated antidumping duties, based upon past margins, to alter the calculation of present margins. The court explained ''[i]f deposits of estimated antidumping duties entered into the calculation of present dumping margins, then those deposits would work to open up a margin where none otherwise exists.'' *Id.* At 737.

Petitioners argue at length that the Department should not distinguish

between purchase price and ESP transactions in deducting antidumping duties. However, because the Department does not deduct estimated antidumping duties from any transaction, this argument is inapposite.

The Department agrees with petitioners that statements made in the URAA are not relevant in this review, which is being conducted under pre-URAA law. However, the policies of other countries, cited by petitioners with respect to this issue, are equally irrelevant.

Comment 24: Respondents claim that the Department made a clerical error in its computer program on an inland freight charge for a U.S. sale.

Petitioners claim that the Department made clerical errors in the computer program by: failing to include the further processing field in the U.S. price calculation; failing to deduct a U.S. rebate from U.S. price; improperly classifying U.S. duty and brokerage as U.S. direct expenses instead of movement expenses; and double-counting one home market rebate.

Respondents agree with petitioners' identified clerical errors. Petitioners did not comment on respondents' identified clerical errors.

Department's Position: We acknowledge the clerical errors which both parties have identified, and have corrected them for our final results of review.

MRM

Comment 25: MRM contends that the Department's preliminary results contained a ministerial error affecting its treatment of VAT as it relates to U.S. sales. MRM asserts that the Department should multiply U.S. Price by 1.07 to account for the seven percent VAT tax which should be added to U.S. price.

Petitioner agrees with MRM but argue that a similar error was made affecting FMV.

Department's Position: The Department disagrees with both petitioners and respondents. In response to *Federal Mogul* v. *United States,* we have changed our VAT methodology in a manner not addressed by either party. See the VAT tax methodology section, above.

Comment 26: Petitioners contend that MRM has not substantiated its reported rebate expense by failing to demonstrate that the rebates were contemplated at the time of sale, and that (with one exception) MRM did not have any written rebate agreements with any of its customers. In support for their position, petitioners cite *Antifriction Bearings (Other Than Tapered Roller Bearings) and Parts Thereof From France, et al.; Final Results of Antidumping Duty Administrative Reviews,* 60 FR 10900, 10930 (February 28, 1995). In addition, Petitioners allege that there is no documentary evidence of MRM's reported ''rebate program.'' Given the average value of these ''rebates'', Petitioners argue that the Department should not grant any adjustment to MRM's FMV (with the exception of the one customer who had a written agreement with MRM).

MRM contends that it has satisfied the legal criteria for establishing that the Department should adjust FMV for rebates. MRM holds that it has established that the rebates are directly related to the sales under consideration by tying them directly to sales invoices and making reference to them on the invoice. In addition, MRM states that the Department conducted sales traces at verification that established that MRM paid the rebates and the documentation noted that the rebates were either customer or product specific in nature. MRM also argues that these rebates are fixed and determinable at the time of sale, and that it is a demonstrable business practice of MRM to offer these rebates.

Department's Position: We agree with petitioners that MRM failed to demonstrate that the rebates were contemplated at the time of sale. At verification, we confirmed that in the normal course of business, MRM normally made verbal agreements over the telephone with its customers concerning rebates. Only one of MRM's customers had a written rebate agreement. At verification, we examined documentation for MRM's one customer that had a written rebate agreement. We found that the agreement stated MRM's rebate program for the upcoming year, the rebate amount and the minimum purchase necessary to qualify for the rebate.

For the rebates where there were verbal agreements, we examined correspondence between MRM and its customers. These letters indicated the amount of sales on a monthly basis, the amount of the rebate earned and method of MRM's payment of the rebate to the customer. However, the correspondence from MRM to its customers fail to indicate what the customer knew at the time of the sale. In addition, MRM stated during verification that ''[i]n most cases there is no written agreement but there are verbal agreements between MRM and its customers. Negotiations and inquiries over MRM's rebate program are usually conducted over the telephone. MRM stated that it does not usually send a confirmation letter to its customers.'' See MRM Sales Verification Report (May 5, 1995), at pg. 14. With regard to MRM's rebates, respondent has failed to provide adequate evidence proving prior customer awareness for the claimed rebate.

As we stated in our position in Comment 13 concerning Dofasco's rebates, the Department allows post-sale price adjustments that reflect the respondent's ''normal business practice.'' The Department found that MRM's ''rebate'' program is part of the company's ''normal business practice.'' As the Department reviewed numerous documentation at verification that confirmed that MRM did pay the ''rebate'' amount claimed in the response, and as we tied the payments to the sale of subject merchandise, we will reclassify MRM's rebates to post-sale price adjustments and deduct them from FMV.

Comment 27: Petitioners note that MRM was unable to report actual credit expense because it could not report actual date of payment, and instead estimated credit expense by multiplying its short-term interest rate by the terms of payment offered to the individual customer. Petitioners contend that MRM's credit expense cannot be based upon terms of payment alone, but must reflect actual credit experience in each market, since all customers do not always pay according to agreed terms of payment. In support of their position, petitioners cite *Antifriction Bearings (Other Than Tapered Roller Bearings) and Parts Thereof From France, et al.; Final Results of Antidumping Duty Administrative Reviews,* 60 FR 10900, 10915 (February 28, 1995); and *Final Determination of Sales at Less Than Fair Value; Certain Tapered Roller Bearings from Italy,* 49 FR 2278 (January 19, 1984). Petitioners contend that the Department should make no adjustment to FMV for credit expense and, for U.S. sales, apply as BIA the highest per unit credit expense reported by MRM for any sale.

MRM argues that it reported estimated dates of payment based upon each customer's terms of payment because it does not maintain records of actual date of payment received for each invoice. MRM notes that Canadian GAAP does not require this information be maintained or collected by MRM. However, MRM did keep track of overdue accounts, and included those figures in its estimates.

Department's Position: We disagree with petitioners that MRM's credit expenses should be denied. At verification, we found that MRM was unable to report the actual expense because in the normal course of business, MRM does not maintain

information on the date of payment in its computer system. We find that MRM's use of the average age of invoices for each month of the POR to be an acceptable methodology given the lack of company data concerning date of payment and the fact that the actual number of days outstanding on late payments were included in the estimate. At verification, we found that the credit information contained in the company's sales response tied to the company's internal records. We specifically examined customer-specific information about the number of days outstanding for credit while conducting our examination of MRM's sales traces at verification and found no discrepancies.

We disagree with petitioners' interpretation of *Roller Bearings from Italy* because in that case, the Department rejected the credit expense because ''the seller received payment on various dates *later* than those required under the terms of sale but did not account for this (emphasis added).'' In contrast, MRM's methodology specifically took into account actual credit experience on overdue accounts. We also disagree with petitioners' reliance on *Antifriction Bearings from France* in which the Department stated that it would be inappropriate to make an adjustment based solely on agreed terms rather than actual terms. In this review, MRM was unable to report the actual expense due to its record keeping system but did account for the late payments. Therefore, for the purposes of the final results, we have allowed the claimed credit expense.

Comment 28: Petitioners note that MRM has reported estimated freight expenses despite an ability to report actual freight expenses on an invoice-by-invoice basis. Therefore, Petitioners contend that the Department should reject MRM's freight information and as BIA use the lowest home market freight adjustment for all home market sales and the highest reported expense for constructed value and U.S. sales.

MRM argues that in the ordinary course of business, it does not track actual freight costs to individual invoices. Instead, MRM includes an estimated freight cost in each invoice and when later available, records the actual freight payment in its account payable records. MRM argues that the Department verified the accuracy of these estimates by comparing the monthly variance between actual and estimated freight payments for shipments in both the U.S. and home markets. MRM states that it established the reasonableness of this approach at verification. MRM contends that the Department's preliminary decision to accept MRM's estimated freight expense is both reasonable and supported by substantial evidence on the record.

Department's Position: We agree with respondent. We found that MRM does not track the actual freight payment on a invoice-by-invoice basis in the normal course of business. At verification, we examined documentation concerning MRM's estimated freight amounts and we successfully tied the estimated amounts to the response and proof of payment. In addition, we examined the variances between actual and estimated freight payments for both home market and U.S. sales and found that the variances were either nonexistent or *de minimis* and thus verified the accuracy of the method of estimation. Consequently, we determine that MRM's freight methodology is reasonable and will allow the adjustments for the final results.

Comment 29: Petitioners argue that MRM improperly calculated its interest expense based upon information for 1993 and the first half of 1994, instead of using only annual data. Petitioners contend that using partial year 1994 data is inappropriate and MRM should have used only 1993 information.

MRM argues that the Department verified the reported interest expense by tying it and the cost of goods sold to the audited financial statements of the Canam Manac group. Petitioner notes also that there is no compelling reason to base interest expense solely on annual figures.

Department's Position: We agree with respondents. The Department tied MRM's interest expense at verification from the questionnaire response to the audited financial statements. We specifically examined the annual data from MRM's audited financial statements for 1993 and 1994. Consequently, the Department examined and verified the full year data on interest expense for both 1993 and 1994 and the actual interest expenses during the POR. Accordingly, the Department will use MRM's interest expense as reported in its questionnaire response.

Comment 30: Petitioners note that MRM reported its G&A expenses on a per/ton basis instead of expressing it as a ratio of cost of goods sold. Petitioners contend that the Department should recalculate the G&A expense as a percentage of cost of goods sold. In addition, petitioners assert that the Department should recalculate MRM's G&A expense as a ratio using 1993 annual data only (excluding the use of partial-year 1994 data).

MRM states that it recalculated its G&A expense as a percentage of the cost of goods sold, in accordance with Departmental instructions, and submitted it the Department on May 5, 1995. Regarding Petitioner's argument that G&A expense should be based upon fiscal year figures only (citing *Oil Country Tubular Goods from Argentina* (60 FR 33539, 33549), MRM notes that the case actually states that ''the Department long-standing [sic] practice is to calculate G&A expenses from the audited financial statement which most closely correspond to the POI.'' Therefore, MRM claims it is entirely appropriate to use the audited financial records corresponding directly to the POR.

Department's Position: We agree with petitioners in part. We agree that the G&A expense should be calculated as a percentage of the cost of goods sold. However, petitioners are incorrect in their assertion that MRM's G&A expense is calculated on a per/ton basis. The Department required MRM to recalculate its G&A on a cost of goods sold basis (see *Memorandum to the File,* May 5, 1995, p.2).

However, we disagree with petitioners that the Department should recalculate MRM's G&A expense as a ratio using 1993 annual data only (excluding the use of partial-year 1994 data). As we stated in *Oil Country Tubular Goods,* the Department's methodology for G&A expenses intends to smooth out fluctuations and capture a representative picture of respondent's G&A costs. MRM's G&A expenses are based on the cost of goods sold over the POR which include 1993 and the first seven months of 1994. At verification, we examined MRM's costs over the entire POR to ensure that respondent properly included all relevant costs in the calculation of its G&A expense. We tied the cost of goods sold to MRM's financial records and statements and determined that both the numerator and denominator in the G&A equation were correct and that the costs were not distortive.

We agree with MRM's interpretation of *Oil Country Tubular Goods from Argentina* where the Department stated that its long-standing practice is to calculate G&A expenses from the audited financial statements which most closely correspond to the POI. The Department's position is also explained in Furfuryl Alcohol (see, *Final Determination of Sales at Less Than Fair Value: Furfuryl Alcohol From Thailand,* 60 FR 22557, 22560, May 8, 1995) where the Department determined that the G&A rate should be calculated from the annual audited financial statements. Since the Department confirmed the accuracy of MRM's G&A

expenses and tied the expenses to both its 1993 and 1994 audited financial statements, we will use MRM's G&A costs for the final results.

Stelco

Comment 31: Stelco states that on August 11, 1995, it advised the Department of a significant error contained in the computer program used to calculate the antidumping margin calculation. Stelco maintains that the Department's computer error resulted in the exclusion of more than 60 percent of Stelco's U.S. sales from the antidumping margin calculation.

Department's Position: We agree with respondent and have corrected our calculations for the final results of review.

Comment 32: Petitioners state that the Department must apply BIA for Stelco's sales of prime corrosion-resistant merchandise with missing product characteristics. Petitioners state that the Department's methodology for matching prime sales with missing product characteristics violates three provisions of the antidumping statute. Petitioners contend that the statute requires the Department to determine FMV based on the price at which ''such or similar merchandise'' is sold in the home market. ''Such or similar merchandise,'' say petitioners, is defined by the statute as merchandise that is ''identical in physical characteristics'' or ''like that merchandise in component material or materials.'' Petitioners contend that these provisions compel the Department to match sales based on actual physical characteristics of the products and do not permit the Department to exclude sales with missing physical characteristics or to assume that missing characteristics are the same as reported for missing characteristics on matching sales.

Petitioners continue that the antidumping statute requires the Department to make adjustments to FMV to take into account the differing costs that are present when matched products are similar but not identical.

Petitioners conclude that the Department must use BIA if the respondent is unable to provide the adequate information, citing *Antifriction Bearings (Other than Tapered Roller Bearings) and Parts Thereof from France et al.,* (57 FR 28360, 28379 June 24, 1992). By failing to report full product characteristics for a number of prime home market and U.S. sales, petitioners state that Stelco made it impossible to accurately perform the model match with respect to these sales or to determine accurate costs of these products. Petitioners assert that the Department is required to use BIA whenever a party or any other person refuses or is unable to produce information requested in a timely manner and in the form required, or otherwise significantly impedes an investigation. Petitioners recommend that to ensure that respondents are encouraged to provide complete information, the Department should apply to the relevant transactions the higher of second-tier BIA or the highest non-aberrant margin found on any Stelco sale. Petitioners indicate that this degree of BIA should be applied to all U.S. prime sales with missing product characteristics as well as to all U.S. sales whose best match could have been a home market sale with missing characteristics.

Stelco contends that it did not fail to report any information available to it, nor did it misrepresent any information. Respondent indicates that Stelco informed the Department that there were a few sales for which it was not able to identify all of the product characteristics requested by the Department, and that a majority of these were sales of secondary merchandise and that the remainder were excess prime sales. Stelco explains these sales of seconds and excess prime had lost their ''mill order number'' and the company then lost track of the characteristics of the merchandise and does not know all of the manufacturing processes.

Respondent maintains that petitioners overstate the significance of limited-characteristic sales. Respondent states that these sales equal .04 percent of total U.S. sales volume. Additionally, Stelco reasserts that given its inability to calculate exact costs for excess prime products, it applied its most reasonable surrogate: The average cost of production for all products having those same characteristics.

Furthermore, respondent objects to petitioners' allegation that Stelco purposefully failed to report product characteristics to conceal high-priced home market sales to circumvent the antidumping law. Stelco states that its inability to provide complete characteristics represents an unintended consequence of the characteristics of the company's normal product invoicing system.

Respondent states that petitioners' assertion that the Department's comparison of these sales violates three provisions of the antidumping statute is based on a fundamentally flawed concept of the law. Respondent maintains that there is nothing in the statute that defines ''identical'' as meaning ''identical in every respect,'' that the interpretation of what is identical is up to the Department, and that the Department's comparison of limited-characteristic merchandise is the only reasonable policy in this case.

Department's Position: We disagree with petitioners. The Department has the authority to determine what merchandise qualifies as such or similar for the purposes of the statute. *United Engineering & Forging* v. *the United States,* 779 F. Supp. 1375, 1380–82 (CIT1991); *NTN Bearing Corp.* v. *United States,* 747 F. Supp. 726, 735–36 (CIT 1990); *Kerr-McGee Chem. Corp.* v. *United States,* 741 F. Supp. 947, 951–52 (CIT 1990); *Monsanto Co.* v. *the United States,* 698 F. Supp. 275, 277–278 (CIT 1988); *Timken Co.* v. *United States (Timken I),* 630 F. Supp. 1327, 1338 (CIT 1986).

Stelco's sales of excess prime represent a very small portion of its home market and United States sales and consist of one or more of the following types of merchandise: (1) Material downgraded from use in exposed portions of automobiles to use in unexposed portions; (2) merchandise resulting from production overruns; (3) leftover materials after customers cancel orders; and (4) merchandise with coil weights less than that required by the customer. The Department verified that Stelco customarily effects these sales by offering the customer a list of products it has ready for sale at specific prices, and the customer returns the offer either accepted, rejected or with a counteroffer. The sales process for this merchandise differs significantly from sales of other prime merchandise because under usual circumstances, the buyer and Stelco discuss quantity, quality and price before the merchandise is produced.

The few prime sales Stelco made that did not have complete physical characteristics were orders for which the mill order number had been lost. The Department verified that Stelco designates prime sales lacking complete characteristics as excess prime sales before the product is sold. Stelco then finds customers for this merchandise. Although the material in question is prime, Stelco reported and the Department verified that it is sold at a reduced price, and in the vast majority of cases to distributors. While this merchandise is not defective, full and complete physical characteristics were not needed to make the sale to the customer. The end uses of such material are applications for which knowledge of certain of the product's characteristics was unimportant.

The use of BIA is not appropriate in this case, because Department

methodology properly matches sales based on the information Stelco reported. The Department verified that because of the way that Stelco keeps its records Stelco could not report the full physical characteristics of the small number of sales in question. Petitioners' reference to *AFB's from France* is not precisely relevant, because in that case, the Department used the BIA cited by petitioners as total BIA for companies that either failed to respond to the Department's questionnaire or were unable to complete verification. In this case, Stelco cooperated with the Department and provided all the product matching physical characteristics that it could report. In addition, the Department could use the information that Stelco provided for matching purposes. Consequently, the use of total BIA in this circumstance is unwarranted.

The Department's model match methodology uses a series of matching product characteristics to find such or similar matches. Using these product characteristics, the Department can reasonably find an ''identical'' match although the merchandise may not be identical in every physical characteristic. We note that the Department used the same matching methodology in the LTFV investigation. (See *Memorandum from Roland MacDonald to Joseph Spetrini,* A–100–003, April 19, 1995).

Therefore, because Stelco sold this merchandise in both markets, because the missing physical characteristics were not important to Stelco's customers and because we verified that respondent reported all physical characteristics it could, the Department matched this merchandise based on the limited physical characteristics reported. Since these were the only physical characteristics relevant to the way the product was sold, we conclude that we may make appropriate matches on the basis of only these physical characteristics in this limited circumstance.

Comment 33: Petitioners contend that Stelco incorrectly reported gross unit prices for corrosion resistant and cut-to-length plate sales in both markets and that they should be rejected. Petitioners state that Stelco directly adjusted its reported gross unit prices for various clerical billing errors or other price adjustments. These adjustments were not made on a transaction-specific basis but were allocated over all invoices referenced on a particular credit or debit memo. Furthermore, say petitioners, Stelco's reporting made it unfeasible to decide what adjustments were made to particular sales, because allocated debits and credits were applied directly to gross unit price and not in a separate computer field, as required by the Department. Petitioners maintain that because it is not possible to determine the actual prices for sales to which price adjustments were assigned, the Department must reject Stelco's information with respect to these sales.

Petitioners argue that it is the Department's practice to require respondents to attribute price adjustments to the precise transactions that lead to the adjustments on a transaction-specific basis, citing *Antifriction Bearings (Other than Tapered Roller Bearings) and Parts Thereof from France et al., Final Results of Antidumping Administrative Review,* (58 FR 39729, 39759 July 26, 1993) (*AFBs from France* (1993)). Despite the fact that the Department rejected Stelco's reporting of allocated price adjustments in the original investigation, and although both the CIT and a U.S.—Canada Binational Panel have specifically upheld the Department's policy with respect to price adjustments, Stelco reported allocated price adjustments in this review, declare petitioners.

Petitioners maintain that in the case in which a respondent improperly allocates adjustments, the Department's normal practice is to treat the adjustments as indirect selling expenses in the home market, and to use the highest reported price adjustment as BIA in the U.S. market. Petitioners conclude that Stelco's improper reporting of its price adjustments merits this application of partial BIA, because it did not list these in the manner required by the Department. When a respondent fails to provide usable information for certain sales, the Department's practice is to use second-tier BIA for the misreported U.S. sales, as well as the U.S. sales whose matching FMV is affected by misreported home market sales, maintain petitioners.

Respondent states that as verified by the Department through each selected sale, Stelco's credit and debit notes reference the specific invoice or invoices to which the credit or debit applies. Respondent continues that in the original investigation, adjustments for clerical errors were made on a customer and product-specific basis only. Respondent indicates that this means that in the investigation they allocated the total of all credit and debit notes issued to a customer on subject merchandise over all sales of subject merchandise to that customer: there was no tying of the adjustments to the individual invoices that they referenced in the adjustments. However, respondent states that for this review Stelco matched each credit and debit note to the specific invoice or invoices to which the note applies. Therefore, concludes respondent, the adjustments are no longer customer and product-specific, but are transaction-specific.

Respondent additionally argues that Stelco correctly reported adjustments for clerical errors in billing. Respondent states that Stelco did not report these errors in a separate computer field for ''rebates'' or ''discounts,'' because they do not meet that definition. Respondent concludes that at verification, the Department reviewed numerous transactions involving adjustments for clerical errors and noted in the verification report that ''all values had been entered correctly and that all adjustments had been calculated properly.''

Department's Position: We agree with respondent. The verification report states that the Department examined documentation concerning Stelco's adjustments to price and we determined that Stelco properly allocated debit and credit notes on a transaction-specific basis. *In AFB's from France,* the Department made direct adjustments for reported home market discounts, rebates, and price adjustments if they were calculated on a transaction-specific basis and were not based on allocations. Petitioners' reliance on *AFB's from France,* as the basis for the Department to determine that Stelco incorrectly reported its gross unit sales prices is therefore unfounded because Stelco reported the majority of these expenses on a transaction-specific basis. However, on occasion, Stelco allocated debit and credit notes for a particular customer over more than one invoice. While the Department prefers that discounts, rebates and other price adjustments be reported on a transaction-specific basis, the Department has long recognized that some price adjustments are not granted on that basis, and thus cannot be reported on that basis.

The Department does not agree that Stelco's methodology is sufficient to warrant application of BIA under the policy as discussed in *AFBs from France* (1993) 58 FR at 39759. In that case, the Department contrasted preferred, transaction-specific reporting with customer- or product-specific reporting. In this case, the amount of ''allocation'' is limited to a few specific transactions, all to the same customer, and typically within a very limited period of time. Thus the danger of allocation, which is the averaging effect on prices, is extremely limited in this case. This case is similar to situations,

permitted by the Department as direct adjustments, in which a rebate is granted on a limited number of purchases by a single customer. Because Stelco's method of reporting these adjustments is reasonable, the Department has allowed it as a direct adjustment.

Comment 34: Petitioners assert that the Department should use BIA with respect to Stelco's reported cash discounts for corrosion-resistant sales citing *AFBs from France* and *Antifriction Bearings (Other than Tapered Roller Bearings) and Parts Thereof from France, et al., Final Results of Antidumping Administrative Review,* (60 FR 10,929 February 28, 1995). Petitioners state that the Department should treat these discounts as indirect selling expenses in the home market, and should use the highest reported discount as BIA in the U.S. market for all sales which incurred discounts because Stelco failed to report its early payment discounts on a transaction-specific basis.

Respondent maintains that the Department's decision to accept Stelco's calculation of cash discounts is reasonable and is supported by evidence on the record. To calculate the adjustment for discounts, Stelco calculated total monthly sales and the total cash discount taken per month for each eligible customer. Stelco then calculated the actual percentage of cash discounts taken by each customer for each month. They then applied these percentages to the gross unit price. Stelco thus calculated the most precise early payment discount adjustment that it could from the information it had available from its computerized accounting system.

Department's Position: We agree with petitioners. Although Stelco's submission of January 9, 1995 indicated that it granted the discounts on a transaction-specific basis, due to accounting restraints, Stelco could not report the actual discount amount, if any, granted on each transaction. Consequently, the Department has no basis to treat this discount as a direct selling expense. Consistent with our practice as outlined in *AFBs from France,* we are treating these discounts as indirect selling expenses in the home market and as direct selling expenses in the U.S. market as best information available.

Comment 35: Petitioners maintain that the Department should not make a particular adjustment for certain U.S. sales of corrosion-resistant carbon steel products.

Respondent agrees that if petitioners' allegation is valid, that the Department should carefully examine its program to confirm that the claimed double-counting in fact occurs under the Department's program.

Department's Position: We agree with petitioner and respondent that the adjustment results in double-counting and therefore the Department will not make this adjustment for the final results. Further explanation of this adjustment would reveal business proprietary information. (See Analysis Memorandum).

Comment 36: Petitioners argue that the Department must deduct antidumping duties paid by the respondent or related parties paid on imports. Section 1677a(d) (1994) states that the purchase price and exporter's sales price shall be reduced by United States import duties. Petitioners continue that antidumping duties are ''incident to bringing the subject merchandise from the place of shipment in the country of exportation to the place of delivery in the United States'' and are therefore properly classified as import duties. Furthermore, petitioners claim that ''duties'' or ''import duties'' in trade laws are to be read as antidumping or countervailing duties unless the provision specifically suggests otherwise.

Respondent maintains that the Department has consistently refused to deduct antidumping duties from U.S. price and that it should continue to do so. Respondent asserts that petitioners argue that 19 U.S.C. 1677a(d) requires the Department to deduct antidumping duties from United States price. Respondent cites *Antifriction Bearings (Other Than Tapered Roller Bearings) and Parts Thereof from France, et al.* 60 FR 10900 (1995) and *Antifriction Bearings (Other than Tapered Roller Bearings) and Parts Thereof from France, et al.* 58 FR 39726 (1993) stating that to make an additional deduction from ESP for the same antidumping duties that correct this price discrimination results in double counting, and that the amount of antidumping duties assessed on imports of subject merchandise constitutes a selling expense, and therefore, should be deducted from ESP.

Respondent continues that as recently as a month ago, the Department rejected almost identical arguments in *Certain Hot-Rolled Lead and Bismuth Carbon Steel Plate from the United Kingdom* 60 FR 44009 (1995). In that case, the Department rejected petitioners' arguments and refused to make an adjustment for antidumping duties in its calculation. Respondent concludes, therefore, that the Department should reject petitioners' arguments in this case and continue to deduct antidumping duties from USP.

Department's Position: We disagree with petitioners. For a more detailed explanation, please see Comment 23.

Comment 37: Petitioners contend that Stelco U.S.A.'s slitting expenses must be treated as further manufacturing costs for purposes of calculating ESP. According to petitioners, respondent reported slitting expenses in the fields OTHEXP1U and OTHEXP2U but did not report these expenses in the fields for further manufacturing costs, nor were they treated as further manufacturing costs by the Department in its preliminary results. Instead, argue petitioners, the Department directly deducted these costs as selling expenses in calculating ESP. Petitioners state that Stelco U.S.A.'s slitting constitutes increased value resulting from a process of manufacture performed after importation. Therefore, petitioners assert that the Department must treat these expenses as further manufacturing costs for purposes of the final results.

Respondent maintains that the Department's questionnaire instructs respondents to consider slitting expenses as selling expenses and that Stelco was required to treat these expenses as such for the sales listing, and not as a manufacturing cost. Additionally, continues respondent, the Department decided that Stelco's slitting expenses did not change an ESP sale into a further manufacturing (FMG) sale, but used the slitting expenses as an additional expense to ESP sales.

Department's Position: We agree with petitioners. Stelco U.S.A. arranges for slitting services to be performed by unrelated parties prior to shipment or sale to its customers. Section 772 (e)(3) requires that adjustments to U.S. price be made for ''any increased value, including additional material and labor, resulting from a process of manufacture or assembly performed on the imported merchandise after importation of the merchandise and before its sale to a person who is not the exporter of the merchandise.'' The Department does not agree with Stelco's argument that the fact that further manufacturing expenses are requested in the sales section of the questionnaire gives any indication that such expenses will be treated as selling expenses. Accordingly, the Department is treating this slitting expense as further manufacturing for purposes of the final determination.

Comment 38: Petitioners assert that respondent reported mistaken amounts in the field for variable manufacturing costs. Instead of reporting the correct variable costs amounts from the cost database, Stelco used the total cost of

manufacture for each control number in the sales listing, state petitioners. Petitioners maintain that the Department must correct this error for the final results.

Department's Position: We agree with petitioners and have corrected this error.

Comment 39: Petitioners state that the Department made several errors in its margin calculation programs that should be corrected for the final results. Petitioners list the following as the mistakes in the program for corrosion-resistant products: (A) The Department set various U.S. adjustments to ''0''; (B) the Department placed price adjustments in the field for U.S. direct expenses, and should have included them with other discounts and rebates to be deducted from U.S. price; (C) the Department's program treats credit expenses as indirect selling expenses in calculating ESP; (D) the program fails to convert the fields RCOM, RGNA, and RINTEX into U.S. dollars in calculating the foreign manufacturing costs of imported goods; and (E) the program fails to include technical services in the calculation of purchase price for U.S. sales. Additionally, the program also leaves out the variables for inventory carrying costs and market warehousing expenses in calculating indirect expenses for purchase price sales, contend petitioners. With respect to the program for plate, petitioners state that the Department's program incorrectly treats inventory carrying costs in the home market as a direct expense.

Respondent did not comment on A, and agrees with petitioners on comments B, C, and D and provided additional coding to rectify price adjustments in the field for U.S. direct expenses in the corrosion-resistant margin calculation program. With respect to comment E, respondent states that technical services should be treated as direct expenses and therefore should receive the same treatment in all calculations of net prices involving both corrosion-resistant and cut to length carbon steel plate. Regarding petitioners' comment on the treatment of inventory carrying costs, warehousing, and U.S. indirect expenses, Stelco alleges that contrary to petitioners' request, indirect selling expenses are not deducted from purchase price sales, and that the Department should not deduct such expenses from these sales. Respondent also agrees with petitioners' comments regarding plate and provided coding to correct the claimed inaccuracies.

Department's Position: We agree with petitioners on comment A. We agree with petitioners and respondents on comments B, C, D and E. We also agree with respondents that inventory carrying costs, warehousing and U.S. indirect expenses are not deducted from purchase price sales. We agree with petitioners and respondents regarding the alleged inaccuracies regarding the margin calculation for plate. (See Analysis Memorandum).

Final Results of Reviews

As a result of our reviews, we have determined that the following margins exist:

Manufacturer/exporter	Time period	Margin (percent)
Corrosion-Resistant Steel		
Dofasco, Inc	2/4/93–7/31/94	1.65
Continuous Colour Coat	2/4/93–7/31/94	1.96
Stelco, Inc	2/4/93–7/31/94	0.19
Cut-to-Length Plate		
Algoma Steel Inc	2/4/93–7/31/94	1.82
Manitoba Rolling Mills	2/4/93–7/31/94	0.02
Stelco, Inc	2/4/93–7/31/94	0.92

The Department shall determine, and the Customs Service shall assess, antidumping duties on all appropriate entries. Individual differences between United States price and foreign market value may vary from the percentages stated above. The Department will issue appraisement instructions directly to the Customs Service. Stelco's rate for corrosion-resistant and Manitoba Rolling Mill's rate for plate are *de minimis.*

Furthermore, the following deposit requirements will be effective, upon publication of this notice of final results of review for all shipments of certain corrosion-resistant carbon steel flat products and certain cut-to-length carbon steel plate from Canada entered, or withdrawn from warehouse, for consumption on or after the publication date, as provided for by section 751(a)(1) of the Act: (1) The cash deposit rates for the reviewed companies will be the rates for those firms as stated above (except that if the rate for a particular product is *de minimis i.e.,* less than 0.5 percent, a cash deposit rate of zero will be required for that company); (2) for previously investigated companies not listed above, the cash deposit rate will continue to be the company-specific rate published for the most recent period; (3) if the exporter is not a firm covered in this review, or the original investigation, but the manufacturer is, the cash deposit rate will be the rate established for the most recent period for the manufacturer of the merchandise; and (4) the cash deposit rate for all other manufacturers or exporters will continue to be 18.71 percent for corrosion-resistant steel and 61.88 percent for cut-to-length plate, the all others rate established in the LTFV investigations. See *Amended Final Determination,* 60 FR 49582 (September 26, 1995).

These deposit requirements, when imposed, shall remain in effect until publication of the final results of the next administrative review.

This notice serves as a final reminder to importers of their responsibility under 19 CFR 353.26 to file a certificate regarding the reimbursement of antidumping duties prior to liquidation of the relevant entries during this review period. Failure to comply with this requirement could result in the Secretary's presumption that reimbursement of antidumping duties occurred and the subsequent assessment of double antidumping duties.

This notice also serves as the only reminder to parties subject to administrative protective order (APO) of their responsibility concerning the disposition of proprietary information disclosed under APO in accordance with section 353.34(d) of the Department's regulations. Timely notification of return/destruction of APO materials or conversion to judicial protective order is hereby requested. Failure to comply with the regulations and the terms of an APO is a sanctionable violation.

These administrative reviews and notice are in accordance with section 751(a)(1) of the Act (19 U.S.C. 1675(a)(1)) and 19 CFR 353.22.

Dated: March 20, 1996.

Susan G. Esserman,

Assistant Secretary for Import Administration.

[FR Doc. 96–7462 Filed 3–27–96; 8:45 am]

BILLING CODE 3510–DS–P

[A–428–816]

Certain Cut-To-Length Carbon Steel Plate From Germany: Final Results of Antidumping Duty Administrative Review

AGENCY: Import Administration, International Trade Administration, Department of Commerce.

ACTION: Notice of final results of antidumping duty administrative review.

SUMMARY: On July 13, 1995, the Department of Commerce (the Department) published the preliminary results of the administrative review of the antidumping duty order on certain cut-to-length carbon steel plate from Germany. This review covers one manufacturer/exporter of the subject merchandise to the United States during the period of review (POR), February 4, 1993, through July 31, 1994. We gave interested parties an opportunity to comment on our preliminary results. Based on our analysis of the comments received, we have changed the results from those presented in the preliminary results of review.

EFFECTIVE DATE: March 28, 1996.

FOR FURTHER INFORMATION CONTACT: Nancy Decker or Linda Ludwig, Office of Agreements Compliance, Import Administration, International Trade Administration, U.S. Department of Commerce, 14th Street and Constitution Avenue, N.W., Washington, D.C. 20230; telephone: (202) 482–3793.

SUPPLEMENTARY INFORMATION:

Background

On July 13, 1995, the Department published in the Federal Register (60 FR 36105) the preliminary results of the administrative review of the antidumping duty order on certain cut-to-length carbon steel plate from Germany (58 FR 44170, August 19, 1993). The Department has now completed this administrative review in accordance with section 751 of the Tariff Act of 1930, as amended (the Act).

Applicable Statute and Regulations

Unless otherwise stated, all citations to the statute and to the Department's regulations are references to the provisions as they existed on December 31, 1994.

Scope of These Reviews

The products covered by this administrative review constitute one ''class or kind'' of merchandise: Certain cut-to-length carbon steel plate. These products include hot-rolled carbon steel universal mill plates (*i.e.,* flat-rolled products rolled on four faces or in a closed box pass, of a width exceeding 150 millimeters but not exceeding 1,250 millimeters and of a thickness of not less than 4 millimeters, not in coils and without patterns in relief), of rectangular shape, neither clad, plated nor coated with metal, whether or not painted, varnished, or coated with plastics or other nonmetallic substances; and certain hot-rolled carbon steel flat-rolled products in straight lengths, of rectangular shape, hot rolled, neither clad, plated, nor coated with metal, whether or not painted, varnished, or coated with plastics or other nonmetallic substances, 4.75 millimeters or more in thickness and of a width which exceeds 150 millimeters and measures at least twice the thickness, as currently classifiable in the Harmonized Tariff Schedule (HTS) under item numbers 7208.31.0000, 7208.32.0000, 7208.33.1000, 7208.33.5000, 7208.41.0000, 7208.42.0000, 7208.43.0000, 7208.90.0000, 7210.70.3000, 7210.90.9000, 7211.11.0000, 7211.12.0000, 7211.21.0000, 7211.22.0045, 7211.90.0000, 7212.40.1000, 7212.40.5000, and 7212.50.0000. Included are flat-rolled products of nonrectangular cross-section where such cross-section is achieved subsequent to the rolling process (*i.e.,* products which have been ''worked after rolling'')—for example, products which have been bevelled or rounded at the edges. Excluded is grade X–70 plate. These HTS item numbers are provided for convenience and Customs purposes. The written description remains dispositive.

The POR is February 4, 1993, through July 31, 1994. This review covers entries of certain cut-to-length carbon steel plate by AG der Dillinger Hüttenwerke (Dillinger).

Analysis of Comments Received

We gave interested parties an opportunity to comment on the preliminary results. We received case and rebuttal briefs from the respondent (Dillinger) and petitioners (Bethlehem Steel Corporation, U.S. Steel Company a Unit of USX Corporation, Inland Steel Industries, Inc., Geneva Steel, Gulf States Steel Inc. of Alabama, Sharon Steel Corporation, and Lukens Steel Company). Dillinger requested a hearing then subsequently withdrew its request; therefore, no hearing was held.

Comment 1: Petitioners assert that based on the overwhelming number of problems with Dillinger's information, the Department has no choice but to apply total best information available (BIA). Petitioners base their assertion on a claim that, despite an inordinate number of opportunities to correct its deficient submissions, Dillinger has still failed to provide reliable data on even the most fundamental elements of the Department's analysis. According to petitioners, the Department's verification reports and exhibits demonstrate Dillinger failed verification. Petitioners assert that problems with Dillinger's data include: a majority of Dillinger's home market sales transactions examined at verification contained erroneous data; Dillinger's product coding contains systemic problems; Dillinger failed to demonstrate complete reporting of U.S. sales for 1994 and home market sales for 1992 and 1994; Dillinger failed to resolve a discrepancy between verification documentation and reported U.S. sales quantities; Dillinger did not provide the necessary actual to theoretical weight conversion factors for cost of production (COP), constructed value (CV), and differences in merchandise (DIFMER) adjustment; Dillinger miscoded customer levels of trade; Dillinger failed to demonstrate that certain freight services provided by related parties were at arm's-length; Dillinger failed to demonstrate that commissions paid to related parties were at arm's-length; Dillinger failed to provide information regarding 500 related companies thus preventing the Department from verifying whether they provide Dillinger with services related to subject merchandise; Dillinger extensively misreported dates of sale and failed to demonstrate to the Department that its reported sales took into account changes in price and payment date; Dillinger reported as date of payment the date on which payment was due to it rather than the actual date on which payment for home market sales was received; and Dillinger's data contains numerous additional inaccuracies and omissions.

Petitioners cite the Department's recent decision to assign total (uncooperative) BIA to Mannesmannrohren-Werke AG (MRW)

in *Small Diameter Circular Seamless Carbon and Alloy Steel, Standard, Line and Pressure Pipe from Germany* (60 FR 31978–79—June 19, 1995). Petitioners argue that this makes the case for applying total BIA to Dillinger all the more compelling because Dillinger's errors and omissions are far more egregious than those committed by MRW. In the *Seamless Pipe* case, petitioners note that the Department found that: MRW company officials were unable to explain or provide adequate documentation for numerous discrepancies and omissions; DIFMER data could not be tied to the financial statements; and MRW did not adequately demonstrate that sales data reported to the Department took into account changes in price, quantity, and date of sale. Similarly, the petitioners assert that the Department's verification reports and exhibits indicate that the Department encountered essentially the same problems with respect to Dillinger's responses, and demonstrate that the Department was unable to verify the completeness of either Dillinger's reported home market or U.S. sales databases. Therefore, according to petitioners, Dillinger's home market and U.S. sales databases have not been demonstrated to be reliable and thus cannot be used to calculate accurate dumping margins.

According to petitioners, significant errors in reporting product characteristics, sale dates, and levels of trade effectively eliminate any possibility of matching home market and U.S. sales. Petitioners assert that the failure to identify related parties renders reported charges and expenses meaningless.

Petitioners argue that Dillinger has significantly impeded the Department's administration of this review by providing seriously deficient information. Furthermore, petitioners claim that Dillinger failed to alert the Department to any difficulties with respect to, among other deficient areas, the reporting of: levels of trade; prime/non-prime merchandise; actual/theoretical weights and conversion factors; and dates of sale. Moreover petitioners argue that Dillinger has repeatedly ignored or provided incomplete and/or inaccurate responses to the Department's requests for information. Therefore, petitioners continue, the Department should disregard Dillinger's responses and use as BIA, the highest rate ever applicable to the firm for the same class or kind of merchandise from the investigation.

Finally, petitioners assert that if the Department determines to contradict its standard practice (*see Defrost Timers from Japan* (59 FR 1928—January 13, 1994), *Tapered Roller Bearings from Japan* (60 FR 22349—May 5, 1995), and *Certain Carbon Steel Flat Products from Belgium* (58 FR 37083, 37084, 37090—July 9, 1993)) and erroneously concludes not to apply total BIA, it should make certain adjustments which are discussed in petitioners' other comments.

Respondent argues that petitioners concentrate on arguments which are either not supported by the record evidence, supplant the Department's judgment of what data should have been verified or taken into evidence as verification exhibits, or take out of context judicial opinions and ignore the relevant case law and standard practices of the Department. Certain of petitioners' comments (*i.e.*, regarding the majority of Dillinger's home market sales containing erroneous data) are nothing more than unsupported statements.

Specifically, respondent contends that contrary to petitioners' assertions, the Department verified the completeness of Dillinger's reported home market and U.S. sales databases. Concerning petitioners' allegation that there is a significant discrepancy in Dillinger's reported value of U.S. sales, respondent argues that it satisfactorily demonstrated that its own accounting records list only the price of the merchandise as it leaves Germany. This value does not include expenses, which are incurred by Francosteel (Dillinger's related U.S. selling agent), included in the sales price to the first unrelated purchaser (*e.g.*, U.S. duty, U.S. inland freight, etc.). The respondent contends that the Department verified the total sales value and quantity for both 1993 and 1994 at Francosteel and tied these amounts to Francosteel's financial statements. Therefore, respondent argues that petitioners' allegation has no foundation in fact.

Respondent further argues that petitioners' assertions of significant errors in reporting product characteristics, sales dates, levels of trade, and failure by Dillinger to identify related parties, are without merit. Respondent contends that the evidence on the record unequivocally shows that the data submitted by Dillinger was verified and accurate in all material respects.

With respect to partial BIA, the respondent does not believe any adverse changes should be made to any item addressed by the petitioners, but if the Department decides to change its calculations, only the actual figure attributable to the sale in question should be changed. Alternatively, a reasonable figure, such as an average of the data provided, should be used rather than the most adverse number advocated by petitioners.

Department's Position: We agree with respondent that the use of total BIA is not warranted in this administrative review. Dillinger has been cooperative throughout the proceeding. While we did discover some errors and discrepancies at verification, the extent and magnitude of the errors and discrepancies did not exceed those that are commonly found at verification and were not so large as to render the Dillinger's reported information unusable. Therefore, we find the use of total BIA unjustified. Regarding date of sale, while changes in price or quantity may have occurred after the date of sale Dillinger reported, the reported price and quantity were correct. In other words, only the date of sale may have been wrong. As the verification report notes, home market date of sale is the date a sale is originally booked in the computer; the date is not changed in this database if the order is subsequently modified. As noted in the preliminary results, we have used shipment date as date of sale for home market sales in our calculations. The rest of petitioners' individual allegations are addressed in other comments.

Comment 2: Respondent argues that the Department incorrectly added a reserve for demolition of an old coking plant. It states that the plant was torn down in 1984—ten years prior to the POR, and that it ended production in July 1984. Accordingly, it states that the cost to demolish this plant can correctly be allocated only to the steel which was the beneficiary of this plant's production. Respondent summarizes that since that steel is not subject to this review, no adjustment is permissible.

Petitioners respond that the Department correctly added this accrual to COP and CV. They state that Dillinger apparently capitalized the costs of demolishing the coke plant because these costs were expected to benefit future periods. Petitioners argue that the subsequent accruals, therefore, represent the periodic benefit which Dillinger associated with the demolition. Petitioners argue that the fact that these expenses were included in Dillinger's fiscal 1993 financial records indicates that the accruals continued through the period of review. The petitioners further state that this accrual differs from the reversal of prior year operating expense accruals (which represent a correction of an estimate made in a prior year) which the Department does not include in COP and CV (*see, e.g., Small Diameter*

Circular Seamless Carbon and Alloy, Standard Line, and Pressure Pipe from Italy, 60 FR 31981, 31991, June 19, 1995).

Department's Position: We disagree with the respondent. This accrual was recorded in Dillinger's accounting records during the POR. It is the Department's general practice to include accruals which are recognized in the respondent's audited financial statements in the COP/CV calculations. While the old coking plant does not benefit current operations, its removal does by rationalizing operations which was recognized in the financial statements during the POR. In *Steel Pipe from Italy*, 60 FR 31981, 31992 (June 19, 1995), we found that upon disposal of assets, the gain or loss associated with them would be included in COP/CV at that time. The demolition of the coke plant is equivalent to the disposal of an asset; therefore we are continuing to include this accrual in the calculation of COP/CV.

Comment 3: Respondent argues that the Department should not have added an amount for Rogesa's (Dillinger's supplier of pig iron and a partially owned subsidiary) write-off of receivables from Saarstahl AG (SAG) (Dillinger's sister company), to COP and CV. Respondent argues that this amount resulted from sales of pig iron by Rogesa to SAG, which were written-off by Rogesa as an extraordinary loss solely because of SAG's bankruptcy. Dillinger further states that because Rogesa is a producer of pig iron and because SAG uses the pig iron to manufacture non-scope products (neither Rogesa nor SAG are producers of carbon steel plate), there is no link between this sale of pig iron and the antidumping order on sales of carbon steel plate by Dillinger. Respondent cites the fact that in prior cases, the Department has determined an extraordinary loss should be included in COP only if it relates to the production of subject merchandise (*Antifriction Bearings from Japan: Final Results*, July 11, 1991, 56 FR 31692, 31734). Finally, respondent states that if the Department continues to include this amount in COP and CV, it should at least reduce the amount by 50 percent. It states that the cost verification report acknowledges that Rogesa would be responsible for only half the amount written off because of Rogesa's profit/loss sharing agreement with its parents.

Petitioners respond that the Department has considered expenses related to bankruptcy proceedings to be ordinary operating expenses, as opposed to extraordinary expenses (*see Fresh and Chilled Atlantic Salmon From Norway*, 58 FR 37912, 37915, July 14, 1993); even if these expenses were extraordinary, they still may be included in the COP and CV if they are related to the subject merchandise. The petitioners further state that the relevance of the SAG bankruptcy expenses to Rogesa is indicated by the fact that the expenses were incurred by Rogesa and were entered on Rogesa's accounting records in the normal course of business. Petitioners continue that since Rogesa booked these expenses as extraordinary rather than operating expenses relating to particular merchandise, these expenses relate to Rogesa as a whole rather than to particular merchandise manufactured or sold by Rogesa. Petitioners claim that accordingly, these expenses are properly included in COP and CV. Petitioners note that COP and CV comprise all costs of producing the subject merchandise including general and administrative (G&A) expenses which relate to the company as a whole rather than to the production process. According to the petitioners, including these expenses in the COP of the pig iron was correct since the pig iron sold to Dillinger is used in the production of subject merchandise. Finally, petitioners disagree with respondent that if the Department includes this expense in COP and CV, it should at least be reduced by 50 percent. Petitioners assert that the fact that Rogesa's parent companies absorb its profit or loss has no relevance to the determination of Rogesa's cost of producing the pig iron used in manufacturing the subject merchandise.

Department's Position: We agree with petitioners that these expenses are properly included in the COP for pig iron. We found these expenses to be write-offs of receivables from SAG. Write-offs of receivables are bad debt expenses. The Department considers these to be ordinary operating expenses because they are by their very nature indirect selling expenses since, under generally accepted accounting principles, bad debt is recovered over time by future price increases (see *Fresh Cut Roses from Columbia*, 60 FR 6980, 7014). Since cost information was used for the purchase of pig iron from Rogesa (rather than acquisition price) and since these expenses are ordinary operating expenses, which relate to Rogesa as a whole, they are properly included in Rogesa's COP along with Rogesa's other general expenses. The fact that Rogesa's parents absorb its profit or loss has no relevance. Rogesa's sales must cover all of its expenses (production and general). Rogesa's G&A costs were divided by total production to give a cost per ton of pig iron. We have treated the bankruptcy costs like Rogesa's other general or overhead expenses.

Comment 4: Respondent argues that Department should not have included two expenses related to SAG's bankruptcy in COP and CV. According to respondent, one of the costs related to Dillinger's assumption of SAG's debt to another company. Respondent states that since SAG does not produce carbon steel plate, this cost is not relevant to the antidumping duty order because it is not related to the production or sale of carbon steel plate by Dillinger. According to respondent, the other cost was an extraordinary loss that resulted from the write-off of claims against SAG for pension obligations, which were to be reimbursed to Dillinger. Again, Dillinger claims that since these expenses do not concern the production of carbon steel plate, they have no relevance to the antidumping duty order.

Petitioners argue that Dillinger: booked these expenses as extraordinary expenses rather than operating expenses relating to particular merchandise; entered into an arrangement to assume various debts of SAG and to write-off receivables owed by SAG; and was jointly liable for SAG's tax liability. Petitioners assert that the bankruptcy expenses assumed by Dillinger, therefore, relate to Dillinger ''as a whole'' and should be included in the G&A component of COP and CV.

Department's Position: We disagree with respondent. Contrary to respondent's characterization, we found these expenses to be write-offs of receivables from SAG and its subsidiaries. Write-offs of receivables are bad debt expenses. The Department considers these to be ordinary operating expenses because they are by their very nature indirect selling expenses since, under generally accepted accounting principles, bad debt is recovered over time by future price increases (see *Fresh Cut Roses from Columbia*, 60 FR 6980, 7014). Therefore, we have included these in the indirect selling expense portion of COP/CV.

Comment 5: Petitioners argue that the Department should include all the bankruptcy expenses related to Dillinger Htte Saarstahl (DHS) (Dillinger's and SAG's parent company) and SAG. Petitioners assert the Department considers bankruptcy costs to be ordinary operating expenses (see *Fresh and Chilled Atlantic Salmon from Norway* (58 FR 37912, 37915—July 14, 1993)). According to petitioners, even extraordinary expenses may be included in calculating the COP and CV under

the principle of full absorption costing provided they are related to the subject merchandise (see *Tapered Roller Bearings from Japan* (56 FR 41508, 41516—August 21, 1991) and *Welded Stainless Steel Pipe from Korea* (57 FR 53693 and 53694—November 12, 1992)). Petitioners argue that although Dillinger contended SAG was not involved in the manufacture of subject merchandise, the information Dillinger submitted at verification indicated otherwise. Petitioners assert that the majority of expenses booked by Dillinger and Rogesa involve write-offs of receivables owed by SAG to Dillinger and Rogesa. According to petitioners, these receivables were generated as a result of the operations of Dillinger and Rogesa. Petitioners claim that while the Department adjusted for Rogesa's write-off of receivables from SAG in the preliminary results, it did not adjust for receivables forgiven by Dillinger or for debts assumed by Dillinger and Rogesa, or other expenses of bankruptcy. Petitioners assert that these remaining bankruptcy expenses should be included in Dillinger's COP/CV. Petitioners note that Dillinger and Rogesa incurred G&A costs (which the questionnaire describes as those which relate to the company as a whole rather than to the production process) to save DHS (their parent) from bankruptcy. Petitioners argue that the exclusion of such costs is contrary to Department practice, and therefore, the costs should be included in G&A.

Respondent argues that the Department correctly excluded certain expenses related to SAG's bankruptcy. It argues that these expenses are not G&A, regardless of the petitioners' characterization, and therefore, don't relate to the company as a whole. According to respondent, many are selling expenses unrelated to scope merchandise (incurred by SAG on purchases unrelated to plate). According to respondent, petitioners do not explain how sales of pig iron by Rogesa to SAG, another non-producer of plate, can be tied to the product under review because there is no connection.

Department's Position: Of the bankruptcy expenses, the Department included: Rogesa's write-off of receivables from SAG in the cost of manufacturing (COM), as explained in Comment 3; and Dillinger's write-off of receivables from SAG and its subsidiaries in the indirect selling expense portion of COP/CV, as explained in Comment 4. The Department did not include the following in COP/CV: Dillinger's and Rogesa's assumption of DHS and SAG liabilities (including VAT responsibilities) and bank debts (that is Dillinger and Rogesa assumed some of SAG's bank debts) because these expenses are not directly related to production. The fact that Rogesa and Dillinger assumed some of SAG's debts does not relate to the manufacture of subject merchandise.

Comment 6: Petitioners argue that the Department should include severance payments made during the POR in Dillinger's COP/CV. They state that during the POR, part of a prior period accrual for severance payments was reversed, and a certain amount was actually paid. Neither was included in the COP/CV calculations, but the petitioners argue, the actual payments should have been included. Petitioners assert that although Dillinger had claimed earlier in the proceeding that the reversal should have been included, this amount was properly excluded. Petitioners claim that this conforms with the Department's recent statement in *Steel Pipe from Italy* (60 FR 31981, 31991—June 19, 1995). However, the petitioners argue that the severance payments made in 1993 should be included in COM because they relate to the manufacturing expenses during the POR. According to petitioners, in *Steel Flat Products from Japan* (58 FR 37174), the Department stated that termination allowances represent an expense recognized within the period of investigation and should be reflected in the product cost in accordance with full absorption costing principles.

The respondent argues that the Department should not just exclude the reversal of the accrual for severance payments but deduct the reversal from COP/CV. It claims that the Department included accruals of severance expenses in its COP calculations in the original investigation of Dillinger. It would be inequitable and without justification for the Department to now ignore the reversal of the accrual for the identical expense. Unlike the case cited by petitioners, Dillinger claims it will achieve revenue or reduced operating costs because it will no longer have to pay the sums involved. According to the respondent, the Department's general view in *Steel Pipe from Italy* does not make sense. According to the respondent, the Department will only accept a reversal of an accrual in the same year as the original accrual. Respondent argues that in that case, there would be no accrual in the financial statement in the first place. Respondent argues that this type of adjustment is conceptually identical to a warranty expense. According to respondent, most warranty expenses do not occur for sales within the period of review; they are often granted later, yet the Department recognizes this as a legitimate expense to be allocated over sales to which they do not apply. Respondent argues that the same holds true for reversals of accruals.

Department's Position: We disagree with petitioners that the actual severance payments should be included in COM. These expenses are applicable to the COM of the period in which they were accrued, which is not the period of review. This is in accordance with full absorption costing principles, which, contrary to petitioners' assertion, is consistent with the *Japanese Flat Products* case. In that case, the termination allowances were recognized within the period of investigation and therefore reflected in the product cost in accordance with full absorption costing principles. In the instant review, the severance expenses were recognized and accrued in a prior period. In the period of review, Dillinger is simply paying severance amounts out of the prior period expense/accrual.

We also disagree with respondent that the reversal of the accrual should be included in COM. The original accrual occurred in 1990. The accrual being reversed relates to costs expensed in 1990, which was before the period of investigation. Therefore, these costs do not relate to the merchandise under review. While reversals of accruals are in accordance with generally accepted accounting principles (GAAP), the Department relies on GAAP if it does not distort costs. In this case, reversing costs that were accrued in 1990 distorts costs in the POR. Furthermore, as we found in *Steel Pipe from Italy,* we do not consider it appropriate to reduce current year production costs by the reversal of prior year operating expense accruals and write-downs of equipment and inventory. The subsequent year's reversal of these estimated costs does not represent revenue or reduced operating costs in the year of the reversal. Rather, they represent a correction of an estimate which was made in a prior year. The position of the Department in *Steel Pipe from Italy* considered the facts in that case, which included write-offs and write-downs. These types of costs are not the costs at issue here. There is not justification for distorting actual production costs incurred in a subsequent year by reducing subsequent year costs by the overestimated amount.

Comment 7: Petitioners argue that the Department should correct the reduction Dillinger made to its COP and CV by reversing a prior period accrual for its Stahlzulage (steel subsidy program). As petitioners discussed in

Comment 6, the Department does not consider it appropriate to reduce current year production costs by the reversal of prior year operating expense accruals (see *Small Diameter Circular Seamless Pipe from Italy* (60 FR 31991) and *Al Tech Specialty Steel Corp.* v. *U.S.*, 651 F. Supp. 1421, 1430 (CIT 1986)). Petitioners assert that because Dillinger has reduced its production costs by the reversal of prior period operating expense accruals, the inclusion of Stahlzulage in COM is improper.

The respondent argues that Dillinger's financial statements, in accordance with GAAP, reversed an accrual for a Stahlzulage subsidy. They state that this was verified, and the Department treated this item correctly in the Preliminary Results and should continue to do so in the Final Results.

Department's Position: We disagree with petitioners. The reversal of the Stahlzulage is permitted by German GAAP, and it is related to assets in use during the POR. Therefore, it is appropriate to include this amount in COM. In *Italian Steel Pipe,* the Department did not consider it appropriate to reduce current year production costs by the reversal of prior year operating expense accruals based on the fact that these were estimated expenses. In the instant review, the Stahlzulage is not an estimate but an amount which is intrinsically linked to assets (currently used in production) based on a program which was allowed by German law. Also, petitioners' citation to *Al Tech* is inapposite. The issue in that case was whether a subsidy determination could be made in the context of an antidumping proceeding. The court ruled that such an investigation could not be undertaken. With respect to the present proceeding, there has been no countervailing duty investigation that has resulted in a determination that the ''Stahlzulage'' is in fact a subsidy. Pursuant to *Al Tech,* the Department is precluded from making such a determination in this antidumping administrative review.

Comment 8: The petitioners argue that the Department should correct the understated amount of Usinor Sacilor's G&A attributed to Dillinger. Dillinger's method of identifying the share of its parent's (Usinor Sacilor's) G&A attributable to Dillinger's operations is flawed. Petitioners contend that the unconsolidated amount (*i.e.*, parent operating expenses less operating revenue) used to calculate this part of G&A equals net operating income or loss, not G&A as should have been calculated. Given the oversight nature of Usinor Sacilor and that no information regarding Usinor Sacilor's unconsolidated expenses is on the record, the Department should consider all of Usinor Sacilor's unconsolidated operating expenses as G&A and should recalculate the parent company portion of Dillinger's G&A accordingly.

Respondent contends that it correctly reported Usinor Sacilor's G&A expenses. According to respondent, only the net expenses of Usinor Sacilor, a holding company without any production of its own, are allocated to affiliated companies; therefore, the net expenses represent G&A expenses which are allocated to operating subsidiaries. Respondent claims that as a non-operating company, Usinor Sacilor only incurs G&A expenses. Although Dillinger disagrees that Usinor Sacilor's G&A expense should be included at all, if it is, the Department's methodology was correct.

Department's Position: We disagree with petitioners. The amount Dillinger used to calculate Usinor Sacilor's G&A attributable to Dillinger was taken from Usinor Sacilor's financial statements. Because the unconsolidated company is a non-producing holding company, the only expenses it incurs are general in nature. It would incur expenses on its own behalf and on behalf of its subsidiaries. Revenue it receives (including reimbursements from subsidiaries) offsets the G&A it incurs on behalf of its subsidiaries. The difference between these two amounts is the G&A expense of the parent company itself. A more detailed allocation is not possible, and is not required, given the absence of more detailed information on the record.

Comment 9: Petitioners contend that the Department should include home market commissions paid to related parties in the calculation of home market selling expenses for COP/CV (SELLCOP). The preliminary margin program determines whether sales were made below cost by comparing net price with COP. Yet, the petitioners claim, the Department did not include in this program the expenses related to Dillinger's related party commissions despite the fact that these are clearly costs of production. Petitioners assert that home market commissions should have been included in SELLCOP (which only included indirect selling expenses in the preliminary results).

Respondent argues that the Department should exclude home market commissions paid to related parties in the calculation of home market selling expenses for purposes of COP. Since Dillinger included both its own indirect selling expenses as well as those of its related sales agent, Saarlux, in the indirect selling expense field, the petitioners' methodology of including Saarlux's sales commissions as well would be double counting.

Department's Position: We agree with respondent. Since Saarlux's expenses are included in indirect selling expenses, commissions to Saarlux should not also be included in total selling expenses for COP/CV. Since Dillinger pays Saarlux commissions to cover Saarlux's costs related to Dillinger's sales, to include both the commissions and Saarlux's actual costs would be double-counting. Since Dillinger did not demonstrate that commissions were at arm's-length, we would not use these commissions as a cost in any event.

Comment 10: Petitioners contend that the Department should apply BIA to determine the COP, CV, and DIFMER of sales for which no weight conversion factor was provided. The weight of steel is an essential element in determining unit price. Dillinger reported all U.S. sales on a theoretical weight basis and home market sales on either a theoretical or actual basis. Petitioners assert that Dillinger did not provide conversion factors to compare home market prices reported on a theoretical weight basis to COP reported on an actual weight basis. Petitioners argue that the Department, therefore, cannot apply the sales-below-cost test to such home market sales. In addition, petitioners assert that conversion factors were not provided to compare the CV amounts, reported on an actual weight basis, to U.S. sales on a theoretical weight basis. In the flat-rolled steel investigation, the Department recognized that U.S. and home market prices, as well as COP and CV, must be on the same weight basis to accurately calculate margins (*see Cut-to-Length Carbon Steel Plate from Finland* (58 FR 37122 and 37123—July 9, 1993) and *Certain Welded Stainless Steel Pipes from Taiwan* (57 FR 53705, 53711—November 12, 1992)). Petitioners assert that although Dillinger eventually provided conversion factors to permit price-to-price comparisons on the same weight basis, it did not provide factors for converting the costs of producing merchandise from an actual to theoretical weight basis. Therefore, petitioners continue, sales prices, on a theoretical weight basis, cannot be compared to COP and CV, which are based on actual weight.

Petitioners argue that Dillinger ignored the questionnaire's explicit instruction to report COP and CV on the same basis as sales were reported. Dillinger's responses state that its cost accounting system uses actual material prices and actual material quantities,

and that the average actual cost of materials and processing per ton for all production, at each step, is calculated monthly. The factors Dillinger provided to convert the weight of home market merchandise sold on an actual weight basis to a theoretical weight basis cannot be used to convert COP or CV to a theoretical weight basis because the conversion factors provided are transaction specific and not control number (CONNUM) specific. Accordingly, the Department should apply BIA to all sales for which Dillinger failed to provide a conversion factor to enable the COP/CV to be compared on the same measure of weight as prices (*i.e.,* all U.S. sales compared to CV and all home market sales made on a theoretical weight basis).

Respondent contends that it reported COP, CV, and DIFMER on a theoretical weight basis. Dillinger reported actual costs and actual weights of inputs at the beginning of the production process. According to respondent, the actual cost per ton of the finished product was calculated using theoretical weight. According to Dillinger, it used theoretical weight as the denominator for the per ton calculation of COP, CV, and DIFMER amounts. Respondent further asserts that there is no weighing station at the end of the production line in the factory. Dillinger does not know the actual weight of each production run, much less record it for cost accounting purposes. The Department can therefore correctly calculate dumping margins using COP, CV, and DIFMER data.

Department's Position: We disagree with petitioners that Dillinger reported its costs on an actual weight basis. When Dillinger reported that it uses actual material prices and actual material quantities, the ''actual'' in that sense refers to the actual in actual cost accounting versus standard cost accounting (used for cost inputs), as opposed to the actual in actual weight versus theoretical weight. Verification Exhibit 2 includes a map of the plate rolling mill. This reveals, as respondent contends, that there is a scale at the entrance to the mill, but there is not one at the end of the process. Therefore, they cannot weigh the finished product at the end of the product line, which indicates that finished product costs are based on theoretical weight. Also, on pages 5–6 of Dillinger's November 14, 1994, Section VI response, Dillinger indicates that its inventory value, which is calculated from the actual average cost system, is based on theoretical production. The inventory amount is only adjusted to actual at year-end. Therefore, Dillinger's day-to-day costs in their accounting system are based on theoretical weight. We agree with petitioners that costs and prices must be on the same weight basis to accurately calculate margins. In this case, the costs and prices are on the same weight basis (theoretical), so the petitioners' argument for BIA moot.

Comment 11: Petitioners argue that the Department should assign BIA to Dillinger's misreported product characteristics. As petitioners have previously pointed out and the Department recognized in its preliminary results, Dillinger has misreported non-prime products (Y-grades) as prime products. Petitioners argue that by including non-prime products within the same product specification as prime products, Dillinger has precluded the agency from comparing prime merchandise to prime merchandise in both markets. The Department's computer program excludes all home market sales of products with specifications that cover Y-grade merchandise. However, petitioners assert, by simply excluding all products with those particular specifications, the Department likely has excluded sales of prime merchandise as well. The petitioners argue that the exclusion of the home market control numbers (CONNUMHs) with these particular product specifications from the margin calculation program in the preliminary results, actually favors Dillinger by lowering its margin. According to petitioners, it was inappropriate to reward Dillinger for this error. The petitioners argue that when a respondent fails to provide the information requested, the Department must use BIA. When employing BIA, there should be an adverse assumption on the part of the Department unless special circumstances dictate otherwise. Petitioners assert that as BIA, all U.S. sales matched to the sale of a home market product in which the specification code is one which includes Y-grade products, should be assigned the higher of the highest, non-aberrant margin calculated on any individual transaction for this review or the 36.00 percent margin assigned to Dillinger in the investigation.

Respondent argues that the Department incorrectly assumed that Y-grade material contained both prime and non-prime merchandise. Dillinger informed the Department that non-prime merchandise sold in the home market should not be compared to prime material. In order to facilitate the Department's calculations, Dillinger reported all non-prime home market sales in a separate file. Thus, respondent contends, only prime Y-grade material is contained in Dillinger's primary home market sales file. Dillinger claims that it informed the verification team that Y-grade material was guaranteed for chemistry, dimensions and for tensile strength. According to respondent, no mill test certificate was issued for mechanical properties because none was requested by the customer. Dillinger did provide an analysis report to the customer. There is a published specification sheet for Y-grade material, indicating it is a prime product, made to order. Thus, respondent argues, while the chemical composition of the products in question did not meet their originally intended specifications, they were nevertheless prime material, meeting the requirements of the published Y-grade specifications. Generally speaking, according to Dillinger, it treats Y-grades no differently from any other prime grade (*i.e.,* A36). Dillinger claims that the verification team simply misinterpreted the facts. According to respondent, all sales reported as Y-grade specifications were treated by Dillinger as prime merchandise. Dillinger argues that its non-prime sales are sold in rail car lots containing mixed products (*e.g.,* carbon and alloy), without reference to type, specification, measurement, or grade. According to the respondent, there is nothing on the record (*e.g.,* verification report) to suggest that Y-grade material is considered to be non-prime material. Respondent asserts that the only record evidence (in the verification report) confirms that all non-prime material is sold in unmarked lots.

Department's Position: We disagree with respondent that Y-grades should be treated as prime merchandise. This is a question of methodology. Dillinger believes this to be prime material, since this is how it was reported and sold. We found at verification that there were ''Misfit Cast'' products, which were characterized as such because of an error in pouring. These were classified as Y-grades. The term ''Misfit Cast'' denotes non-prime merchandise. Since Dillinger did not provide enough information to refute this classification, we are continuing to treat Y-grades as non-prime merchandise. However, since Dillinger provided all requested information, and given the relatively small number of sales involved, we have determined simply to exclude from the home market sales database all specification codes containing Y-grade material. We do not agree with petitioners that our methodology (disregarding sales with specifications

that contain Y-grades) actually favors Dillinger. Even though these specification codes contain some prime material, given the structure and hierarchy of the model match, these specification codes would not match to any U.S. sales. Therefore, the impact on the dumping margin is essentially non-existent.

Comment 12: The petitioners argue that the Department should use adverse BIA to account for Dillinger's unreported and unverified home market sales. Petitioners assert that there is no indication that Dillinger's 1994 financial statements were ever examined by the Department during the sales verification. Petitioners continue that the absence of such financial statements during the verification prevented the Department from tying home market sales for 11 of the 23 months for which home market sales were reported, to Dillinger's audited financial statements. The petitioners argue that it is not possible to conclude that all 1992 and 1994 sales in the home market were reported or that accurate information was provided for home market sales in 1992 and 1994 since neither years' sales were traced to their respective audited financial statements. Since Dillinger presented 1994 semi-annual financial statements to the cost verification team but not to the sales verification team, the petitioners assert that this indicates selective presentation of information, which casts further doubt on the completeness of Dillinger's home market sales database. If the Department erroneously concludes that Dillinger's reported home market sales are usable, petitioners argue that BIA should be used to account for unreported or unverified home market sales. Petitioners continue that any U.S. sale made in February or March 1993, or between November 1993 and July 1994, should be assigned as BIA the higher of the highest non-aberrant margin or the 36.00 percent margin from the investigation

Respondent contends that the Department verified the total quantity and value in both the U.S. and home markets for the entire period of review, 1993 and 1994. Dillinger provided all data requested by the Department during verification. Respondent argues that as the petitioners are well aware, the Department does not trace sales to the financial reports for each month in the period of review.

Department's Position: We disagree with petitioners. We consider total home market sales to be verified. Contrary to petitioners' assertion, we were not prevented from verifying certain months during the POR. Verification is a testing procedure and not every single item is examined (*see Monsanto Co. v. U.S.*, 698 F. Supp 275, 281 (CIT 1988)). In the present case, we traced 1993 totals to the audited financial statements and performed completeness checks on various months in 1993 and 1994. For example, we reviewed the general ledger, sales ledger, sales journal, and profit and loss statement from the general ledger for the months of October 1993, February 1994, and June 1994. Dillinger provided all requested information, and contrary to petitioners' assertion, we were not prevented from verifying any month of the period. Because no discrepancies were found, we consider total home market sales to be reported and verified.

Comment 13: Respondent notes that in comparing foreign market value (FMV) to end-user sales in the United States, the Department made an adjustment to FMV to compensate for the problem discovered at verification where Dillinger incorrectly coded the customer code and level of trade for six home market sales. Respondent argues that as a result, the Department used one level of trade in the home market and increased the price of all end-user sales—both those incorrectly coded as well as those correctly coded—by the level of the discount granted to service centers/distributors when compared to end-user sales in the U.S. Respondent argues that this methodology added the full amount of the discount to sales that were correctly coded. Instead, respondent proposes that a smaller adjustment be made to all end-user sales which would be calculated by applying to the discount the ratio of incorrectly coded sales to total sales examined.

Petitioners note that the Department's adjustment incorrectly assumes Dillinger misreported the home market customer level of trade in only one manner—by identifying service center sales as end-user sales. Petitioners note Dillinger also misreported end-user sales as service center sales. Because of Dillinger's improper reporting of level of trade and failure to adequately explain the Handlerrabatt and its commissions have precluded the Department from identifying the correct level of trade, the Department should assume all sales constituted sales to end-users and increase all home market prices by the amount of the discount.

Department's Position: We agree with petitioners that respondent's improper reporting of level of trade and its failure to report separately certain other adjustments have precluded the Department from identifying the correct level of trade. Since the only known difference in terms of sale to service centers/distributors and end-users was that service centers/distributors received a trader discount (Handlerrabatt), in matching home market sales to sales to U.S. end-users, we have adjusted FMV for this discount. We disagree with petitioners that this amount should be added to FMV for all home market sales matching to U.S. service center sales. The Department's methodology in effect treats all home market sales as service center sales. Therefore, there is no reason to increase the FMV for home market sales matched to U.S. service center sales. We also disagree with respondent that we should adjust FMV by a ratio applied to the discount, rather than the full discount. Given the pervasive errors in the respondent's database in the coding of the customer and the level of trade, it is appropriate to treat all home market sales as service center sales and increase FMV for all such home market sales matched to U.S. end-users by the full trader discount.

Comment 14: Respondent states that the sales verification report contained misstatements concerning discounts for home market sales and other expenses. The verification report states that the reported gross unit price is net of a market discount and trader's commission. The report also states that the reported gross unit price includes an end-user discount which is paid directly to the customer and is reported in the other expense field. Respondent states that all discounts granted to service centers/distributors, whether market, trader's or end-user, are subtracted by Dillinger during negotiation with the purchaser, and the invoice price is net of these discounts. Thus, according to respondent, the end-user discount is not found in the other expense field. Respondent states that if the verification report were correct, the other expense field would have an amount corresponding to discounts given to service centers for end-user sales.

Department's Position: We disagree with respondent. Respondent is confusing the end-user rebate with discounts given to service centers for end-user sales. In the verification report the term ''trader's commission'' refers to discounts given to service centers for end-user sales. This discount is netted out of reported gross unit price. However, end-user rebates—paid directly to the service center's customer—are included in reported gross unit price and are reported in the other expense field.

Comment 15: Petitioners state that the Department should correct Dillinger's reported home market gross unit prices

to account for the conversion from actual to theoretical weight.

Respondent agrees that the Department should compare sales in each market on a same weight basis.

Department's Position: We agree that Dillinger's reported home market gross unit prices should be adjusted from actual to theoretical weight and have done so in these final results. Additionally, we have converted to a theoretical weight basis, other Dillinger adjustments which were reported on an actual weight basis (*see Analysis Memorandum*, November 6, 1995).

Comment 16: Petitioners argue that the Department should deny Dillinger's home market credit expenses because Dillinger reported payment due dates rather than the actual dates of payment. Should the Department erroneously grant Dillinger a downward adjustment for home market credit expenses, this adjustment should be limited to the smallest credit expense reported by Dillinger for any home market sale.

Respondent notes that the Department verified the actual dates of payment for Dillinger's home market sales. These dates, according to respondent, were substantially the same as those reported in the responses. Respondent argues that no change in methodology should be made to that used in the preliminary results.

Department's Position: We agree with respondent that we should not deny Dillinger's adjustment to home market price for credit expenses. However, contrary to Dillinger's assertion, at verification we found that Dillinger's actual payment dates were different than reported in that they generally were later than those reported. As such, Dillinger's actual expenses, on those sales that were verified, generally exceeded those that were claimed. Accordingly, we are allowing the claimed expense.

Comment 17: Petitioners argue that the Department should deny Dillinger's claimed adjustment for global credit and debit notes and other expenses. Petitioners state that Dillinger has not given a consistent explanation of these adjustments. Both global credits and debits are reported for certain transactions. According to petitioners, it appears that the other expenses field also includes global credit notes, which would result in double counting of global credit notes. Petitioners question whether gross unit price has already been adjusted for end-user discounts.

Respondent disputes petitioners' claims, noting that Dillinger gave the Department a detailed explanation of the global credit and debit notes at verification and provided the identity of all customers receiving these credits and debits. Respondent asserts that the Department verified how Dillinger allocated these notes on a customer-by-customer basis, and the Department correctly accounted for these notes in the preliminary results. Respondent explains that global credits and debits could have been granted for the same sales because a particular customer could have been granted credits on some sales and debits on other sales. With respect to the other expense variable, respondent notes that this variable is correctly described on page 31 of the sales verification report, which states that this field contains rebates, invoicing errors, or warranty expenses.

Department's Position: We disagree with petitioners. At verification we verified Dillinger's methodology for allocating global credits and debits on a customer-by-customer basis. We found that global credits and debits were accurately reported. We agree with respondent that global credits and debits could have been granted for the same sales because a particular customer could have been granted credits on some sales and debits on other sales. As noted in our verification report, we found at verification that gross unit price had not been adjusted for end-user discounts and this discount was reported in the other expense field. The other expense field does not include global credits or debits. Hence there is no double counting.

Comment 18: Petitioners state that the Department should recalculate Dillinger's overly inclusive and misallocated home market indirect selling expenses. According to petitioners, Dillinger included both their sales cost as well as those of Saarlux. Petitioners assert that this is different than the methodology used to calculate the U.S. indirect selling expenses. Petitioners continue that Dillinger reduced its costs to account for functions performed by Francosteel and Daval (Francosteel's parent and a commission agent on U.S. sales). Petitioners further assert that Dillinger did not provide an explanation for how it determined cost of manufacturing used to allocate U.S. indirect selling expenses. Because of the complete miscalculation of its home market indirect selling expenses, the Department should deny Dillinger any adjustment for home market selling expenses. If the Department determines to grant this adjustment, then at a minimum, the Department should assign the smallest reported home market selling expense for any sale to all home market sales.

Respondent states that it did not double count any home market indirect selling expenses. Dillinger argues that it did not artificially reduce any sales expenses attributable to U.S. sales. According to Dillinger, it simply did not incur many traditional selling expenses applicable to U.S. sales because those functions are performed by Daval and Francosteel. Dillinger asserts that it also does not incur all home market selling expenses because many of them are performed by Saarlux. Dillinger argues that it correctly calculated indirect selling expenses in both markets predicated on cost of manufacturing, and that this is confirmed in verification exhibits.

Department's Position: We agree with respondent. We found both home market and U.S. indirect selling expenses to be allocated on the basis of cost of manufacturing. The methodology used by Dillinger for calculating home market indirect selling expenses was reasonable and not overly inclusive. U.S. indirect selling expenses have not been used in the calculation of antidumping duty margins as we consider Dillinger's U.S. sales to be purchase price and there are no home market commissions to offset with U.S. indirect selling expenses. Therefore, issues relating to the use or calculation of U.S. indirect selling expenses are moot.

Comment 19: Petitioners state that the Department should deny the erroneous adjustment for inventory carrying costs it granted to Dillinger. Petitioners assert that Dillinger failed to provide any support for its method of calculating the number of days between the date of production and the date of shipment. Petitioners summarize that Dillinger has thus failed to demonstrate entitlement to this adjustment, and the Department should deny it.

Respondent argues that it provided a detailed explanation of how it derived inventory carrying costs at verification. According to the respondent, the Department accepted and verified that explanation.

Department's Position: We disagree with petitioners. At verification, Dillinger provided the Department with a copy of a submission estimating the number of days between the date of production and the date of shipment. These figures appeared reasonable at verification, and result in an extremely small adjustment for inventory carrying costs. We note that inventory carrying costs are included in indirect selling expenses. As stated above in the Department's position on question 18, we have not used U.S. indirect selling expenses in our calculations. We further

note that home market indirect selling expenses are only included to the extent that they do not exceed U.S. commissions. As home market indirect selling expenses exceed U.S. commissions even if inventory carrying costs are not included, this issue is moot.

Comment 20: Petitioners argue that the Department should treat Dillinger's U.S. sales as exporter's sales price (ESP) transactions. According to petitioners, there is no documentary evidence that supports Dillinger's assertion that its related selling arm in the United States, Francosteel, is only a processor of sales-related documentation. Petitioners assert that Dillinger's sales through Francosteel do not meet the statutory definition of purchase price. The Department uses a three-part test to determine whether ESP or purchase price should be used to determine United States price (USP) when the sale is made prior to the date of importation. Petitioners argue that only the third factor in this test (whether the related selling agent in the U.S. acted only as a mere processor of sales-related documentation and a communications link with the unrelated U.S. buyers) directly addresses the question for whether the sales took place in a foreign country for exportation to the United States. Before the Department can make a finding that the related party is just a processor of documentation, there has to exist evidence in the record to support that conclusion. Petitioners assert that in this case, the Department only has Dillinger's assertion. Petitioners argue that there is nothing in the record that indicates that Francosteel communicated with Daval before it issued its confirmation of sale. Petitioners argue that the price at which the merchandise is sold to the unrelated purchaser is different from the price at which it was purchased from Daval. Petitioners assert that in *PQ Corp* v. *U.S.*, 652 F. Supp. 732 (CIT 1987), the court noted that this is a factor that supports a determination that the sale is an ESP transaction. Petitioners argue that Dillinger has the burden of producing the information that proves Francosteel is only a processor of sales related documentation, and it has not done so.

Petitioners further argue that Francosteel sells for its own account in the United States. According to petitioners, Francosteel's agreement with Daval demonstrates that Francosteel has undertaken to sell, in the United States, the products of a related party, and that it, Francosteel, not the unrelated purchaser, obtains those products through a purchase from Daval. Because the sale takes place in the United States between a party related to the foreign seller and an unrelated purchaser, the sale is clearly ESP. Petitioners assert that since Francosteel purchases the products from the foreign seller and the unrelated purchaser does not, the transaction falls outside of the purchase price definition.

Petitioners further argue that declarations made on Customs Form 7501 clearly indicate that Francosteel is the purchaser of the imported merchandise. Petitioners assert that given these declarations, this merchandise was apparently entered for appraisement by Dillinger under transaction value, the most common basis of determining Customs value. According to petitioners, transaction value is defined as the price actually paid or payable for the merchandise when sold for exportation to the United States. Petitioners assert that this definition is largely the same as purchase price. Petitioners argue that given the similarity of the statutes, Dillinger's claim that its U.S. sales to the first unrelated purchaser should be treated as purchase price transactions is inconsistent with a claim that the merchandise should be appraised under transaction value at the price established by the Daval/Francosteel transaction.

Respondent asserts that the first unrelated customer purchases the merchandise from Dillinger, not Francosteel. Respondent argues that at the time of the order and order confirmation, Francosteel does not have title to the merchandise. According to respondent, Francosteel merely receives the order from the unrelated customer and forwards it to Dillinger for approval. Respondent further states that once Dillinger approves the order, it notifies Francosteel, and then Francosteel notifies the customer. Dillinger treats the date of sale as the date it enters the order confirmation into its system. According to respondent, only after the plate is produced does the contract between Daval and Francosteel become applicable. Respondent states that at this time the steel has already been sold to the first unrelated customer. Respondent asserts that Francosteel's agreement with Daval operates only from the time that Francosteel obtains the merchandise at the European port until it invoices the U.S. customer upon arrival at the U.S. port. Even if Francosteel took title, in *Outokumpu Copper Rolled Products AB* v. *U.S.*, 829 F. Sup. 1371 (CIT 1993), the Court held that where the subsidiary took title to the exported merchandise and paid customs duties, the sales were nevertheless properly classified as purchase price transactions.

The respondent further asserts that a related U.S. company can receive purchase orders directly from U.S. customers, send invoices directly to those customers, act as an importer of record and receive payment, and still be deemed to be a mere processor of documentation and a communication link (*see E.I. DuPont de Nemours & Co.* v. *U.S.*, 841 F. Supp. 1237 (CIT 1993)). Therefore, the Department should continue to treat U.S. sales as purchase price transactions.

Department's Position: We disagree with petitioners. The Department determined that purchase price, as defined in section 772 of the Tariff Act, was the appropriate basis for calculating USP. All sales were made through Francosteel, a related sales agent in the United States, to unrelated purchasers. Whenever sales are made prior to the date of importation through a related sales agent in the United States, we typically determine that purchase price is the most appropriate determinant of the USP based upon the following factors: 1) the merchandise in question was shipped directly from the manufacturer to the unrelated buyer, without being introduced into the inventory of the related shipping agent; 2) direct shipment from the manufacturer to the unrelated buyers was the customary commercial channel for sales of this merchandise between the parties involved; and 3) the related selling agent in the United States acted only as a processor of sales-related documentation and a communication link with the unrelated U.S. buyers. See *Certain Stainless Steel Wire Rods from France: Final Determination of Sales at Less than Fair Value,* 58 FR 68865, 68868 (December 29, 1993); *Granular Polytetrafluoroethylene Resin from Japan: Final Results of Antidumping Duty Administrative Review,* 58 FR 50343, 50344 (September 27, 1993). In the present review, we found that: the essential terms of sale were set prior to importation by or on approval by Dillinger; the merchandise was shipped immediately to the customer upon importation into the United States, without being introduced into the inventory of the related shipping agent; direct shipment from the manufacturer to the unrelated buyers was the customary commercial channel for sales of this merchandise; the merchandise was not warehoused by Francosteel during the normal course of business; and the related selling agent in the United States acted only as a processor of sales-related documentation and a

communication link with the unrelated U.S. buyers.

Even if Francosteel temporarily takes title to the merchandise, it is not inventoried by them. The term ''inventory'', as it is commonly used in business, implies that the merchandise is in storage and is available for sale. We have determined that the subject merchandise that Francosteel imports (the merchandise is not physically warehoused by Francosteel during the normal course of business) is not generally available for sale. It is awaiting delivery to a specific customer (*see Stainless Steel Wire Rods from France).*

Although Francosteel takes title to the merchandise and participates in sales negotiations, we found at verification that it does not have the flexibility to set the price of the steel and only acts as a processor of sales-related documentation (*see Stainless Steel Wire Rods from France*). Furthermore the Court of International Trade found in *Independent Radionic Workers of America* v. *U.S.,* (Slip Op. 95–45, March 15, 1995 CIT), that while the respondent processed purchase orders, performed invoicing, collected payments, arranged U.S. transportation, and was the importer of record, these duties, while substantial, are not necessarily disqualifying of purchase price treatment.

For all of the above reasons, we are continuing to treat U.S. sales as purchase price sales.

Comment 21: Petitioners argue that the Department should apply BIA to the value of a discrepancy in Dillinger's reported U.S. sales for 1993 and its sales ledger information. Petitioners state that Dillinger underreported both the quantity and value of its U.S. sales.

Respondent counters that it explained at verification the double counting of one invoice. Respondent also states that the discrepancy in the value of U.S. sales is accounted for by expenses incurred by Francosteel which are not contained in Dillinger's books.

Department's Position: We agree with respondent. As Francosteel explained at verification, Dillinger only retained one entry for the same tonnage in its calculations of total volume and value, thinking that the second identical tonnage was a duplication. However, the same tonnage was reported on two separate invoices, and was properly reported in Dillinger's U.S. sales listing. This second ''duplicate'' invoice accounts for virtually all of the tonnage discrepancy. The difference in value is accounted for by expenses incurred by Francosteel.

Comment 22: Petitioners argue that the Department should apply BIA to the value of all 1994 Francosteel imports, as Dillinger failed to demonstrate the completeness of its 1994 U.S. sales at verification.

Respondent states that petitioners' assertion is without any foundation on the record. Nowhere in the verification report does the Department state that any material data was not verified. Accordingly, the Department should continue to use Dillinger's 1994 sales data.

Department's Position: We agree with respondent. As discussed above, verification is a testing procedure and not every single item need be examined. *See Monsanto Co.* v. *U.S.,* 698 F. Supp 275, 281 (CIT 1988). We consider total U.S. sales to be verified. We traced 1993 totals to the audited financial statements and performed completeness tests on various months in 1993 and 1994. For example, we randomly selected sales from Francosteel's invoice registers for the months of August 1993 and August 1994 to determine if products were properly included and/or excluded from Dillinger's U.S. sales listing. Because no discrepancies were found, we consider total U.S. sales to be reported and verified.

Comment 23: Petitioners claim that the Department should apply BIA to unreported sales made by Berg Steel Pipe (Berg). Petitioners state that they gave the Department information indicating that Dillinger failed to report sales of subject merchandise (pipe) by Berg Steel Pipe, a related party to Dillinger. According to petitioners, the Department did not confirm whether there were any sales of subject merchandise made by Berg to unrelated customers in the United States during the POR. Petitioners argue that simply because Dillinger stated that Berg did not purchase subject merchandise from it during the POR does not foreclose the possibility that Berg already had subject merchandise in stock which it could have sold during the POR. Petitioners argue that furthermore, Dillinger permitted the Department to select invoices only from a computer-generated listing at verification, rather than an actual sales journal, and did not demonstrate that the computer program which generated the listing was outputting appropriate and complete information. Publicly available data shows that Francosteel imported and shipped steel plate to Panama City, Florida, where Berg is located, during the POR.

Respondent states that the Department verified that all sales and entries in the POR by Dillinger to Berg were of non-scope merchandise. Respondent asserts that assuming, arguendo, that Berg had sales of scope merchandise in the POR which were entered prior to the POR, the petitioners' point is moot. Respondent argues that entries prior to the POR are not subject to this review and have already been liquidated in any case.

Department's Position: We agree with respondent. While it is true that Dillinger sold plate to Berg during the POR, there is no evidence that any of this steel was subject merchandise. To establish whether any sales of subject merchandise were made to Berg, we examined random invoices selected from a company computer report listing all sales to Berg at verification. This report was generated from Dillinger's normal sales accounting system. The sales invoices we examined described the plate sold to Berg as X–70 grade steel, which is outside the scope of this review. We reviewed mill certificates for certain invoices, confirming that this steel was X–70 grade and the strength levels were above 70,000 pounds per square inch. We found this to be sufficient proof that Dillinger did not sell subject merchandise to Berg during the POR.

Comment 24: Petitioners state that the Department should use BIA for foreign brokerage and handling. Because there has been no demonstration of arm's-length transactions between Dillinger and the related company that provided its foreign brokerage and handling services, the Department should apply adverse BIA.

Respondent notes that the Department verified that the brokerage and handling fees charged by this related company were at arm's-length.

Department's Position: We disagree with petitioners. As noted above, verification is a testing procedure and not every single item need be examined. *See Monsanto Co. v. U.S.,* 698 F. Supp 275, 281 (CIT 1988). We performed an arm's-length test on one related party (a barge company) and found that prices for comparable services charged by the unrelated party were less than those charged by the related party. We also found that another related party providing services to Dillinger was profitable. We have no reason to believe that foreign brokerage and handling were provided on other than an arm's length basis and we are allowing this adjustment.

Comment 25: Petitioners argue that the Department should use BIA for ocean freight. They claim that there has been no demonstration of arm's-length transactions between Dillinger and the

related company that provided ocean transportation services.

Respondent notes that the related party does not own the ships which carry the plates to the United States; this related party simply arranges transportation. Respondent argues that none of the ocean carriers are related to Dillinger, and the payments made for ocean freight were made to unrelated parties.

Department's Position: We agree with respondent. While ocean freight is arranged by a related party, the actual ocean carriers are unrelated parties. As such, there is no need to perform an arm's length test because the actual ocean freight is not provided by a related party.

Comment 26: Petitioners state that the Department should use BIA for foreign inland freight. First, the petitioners argue, Dillinger reported related-party foreign inland freight charges, but failed to demonstrate that they were incurred at arm's-length prices. According to petitioners, Dillinger attempted to demonstrate its foreign inland freight expenses were at arm's-length by providing information at verification concerning a transaction between Dillinger and an unrelated freight company. However, the petitioners assert, the verification report does not indicate the product shipped, the route, or the basis for calculating the rate. Moreover, the petitioners argue, the invoices examined were for a different period than those to its related party. The petitioners argue that Dillinger also claimed its transactions were at arm's-length based on transportation charges between this related party and an unrelated customer. However, the petitioners assert, the supporting documentation provided is merely a translation of an agreement, with no actual original documentation. The petitioners argue that the verification report does not indicate that this information was ever verified. According to petitioners, verification documentation also reveals that Dillinger often incurred foreign inland freight expenses through another related company; Dillinger did not attempt to demonstrate those transactions were at arm's-length. Second, the petitioners assert, the Department's program fails to correct the weight basis used for foreign inland freight. The petitioners argue that Dillinger incorrectly converted a theoretical weight figure to an actual weight figure, even though U.S. sales were reported on a theoretical weight basis. Third, the petitioners assert, Dillinger has failed to include costs associated with loading, unloading, and transportation of the merchandise from Dillinger's factory to the port of Dillingen.

Respondent counters that the verification report accurately portrays the arm's-length nature of the foreign inland freight expenses. According to respondent, the documents inspected by the verification team completely satisfied the Department. The respondent argues that concerning the weight basis of the shipped plate, the Department is confused on the facts. Respondent states that the barge company bills Dillinger on an actual weight basis. Respondent argues that it converted this figure to a theoretical weight basis for purposes of its responses.

Department's Position: We disagree with petitioners. Verification is a testing procedure and not every single item need be examined. *See Monsanto Co.* v. *U.S.*, 698 F. Supp 275, 281 (CIT 1988). We performed an arm's-length test on one related party (a barge company) and found that foreign inland freight charges charged by an unrelated party were less than those charged by the related party. In addition to the checks performed at verification, we have compared the prices charged by this unrelated party to reported foreign inland freight expenses for 1994 U.S. sales. We again found the related expenses to be greater than the unrelated charges. Thus, we believe Dillinger's foreign brokerage and handling expenses to be at arm's length. We agree with respondent that verification exhibits demonstrate that these expenses were reported on a theoretical weight basis. Regarding the costs associated with loading, unloading, and transportation of the merchandise from Dillinger's factory to the port, we found (on the basis of the information submitted and verification findings) these expenses to be included in COP/CV. In Dillinger's accounting system, these expenses are embedded in the cost of production and are not easily separated. These expenses are incurred on both home market and U.S. sales. Also, because of the very short distance from the plant to port, these expenses are extremely minor. Therefore, we are allowing Dillinger's treatment of these loading, unloading, and transportation expenses.

Comment 27: Petitioners state that the Department should reject Dillinger's reported U.S. short-term interest rate. In determining whether to use loans obtained from related parties to calculate credit and inventory carrying costs, the Department examines the terms of these loans to determine whether they were made at arm's-length interest rates. When a respondent fails or is unable to demonstrate that such loans are at arm's-length, the Department excludes these loans from its calculation of interest rate. According to the petitioners, Dillinger did not demonstrate this and failed to exclude these related party interest rates from the weighted-average interest rate used to calculate credit and inventory carrying costs. Petitioners argue that verification exhibits demonstrate that the related party interest rates were not arm's-length. Petitioners assert that there is no indication that Dillinger attempted to demonstrate the reported interest rates reflected all of Francosteel's borrowing during the POR. Petitioners argue that there is no indication of any review of Francosteel's accounts to verify whether Francosteel used other sources of financing. Since Dillinger did not establish the arm's length nature of its related party borrowings or demonstrate that all borrowings were reported, its reported U.S. short-term interest rate should be denied altogether. The Department should use the U.S. prime lending rate or, at a minimum, use the weighted-average short-term interest rate reported by Dillinger calculated without the related party interest rates.

Respondent argues that the Department verified that loans from related parties were at arm's length by comparing them to those obtained from unrelated parties. Therefore, no change should be made to the Department's methodology.

Department's Position: During verification, we examined Francosteel's accounts to determine that all short-term borrowings had been reported for use in the short-term interest rate. To accomplish this, we inquired about all interest expenses on Francosteel's books and their sources. We were satisfied that all borrowings had been reported. We disagree with petitioners in part in that some of the related party loans are considered to be arm's-length when compared for contemporaneous periods. That is, we compared the loan from a related party to those from unrelated parties, looking at when they were made. Some of the related party loans were found to have rates at or above those of unrelated parties, using time and term as the criteria. Accordingly, loans from related parties whose loans were below arm's-length were excluded from the interest rate calculation for purposes of these final results (in the preliminary results, all loans from related parties had been included in the calculations).

Comment 28: Petitioners state that the Department should apply BIA to an unreported U.S. sale. Petitioners state that the Department's examination of

one observation at verification revealed the amount invoiced to the U.S. customer was less than the total amount appearing on the bill of lading. Petitioners argue that although this sale should be included in Dillinger's sales listing, the verification report provides no indication the sales listing was examined to verify that the sale had been reported, nor does it indicate any follow-through during verification to determine similar discrepancies. Therefore, the Department should presume the difference is caused by a missing sale and should apply total BIA to the value of that sale.

Respondent notes that sales to one end user were made each time that customer released tonnage from its inventory. Respondent asserts that all tonnage contained in the bill of lading is accounted for in the observations reported to the Department, and there are no unreported U.S. sales.

Department's Position: We agree with respondent. In verifying the calculation of U.S. duty on the observation in question, we examined the total volume on the entry and verified it was totally reported in Dillinger's submissions across a number of other observations. Therefore, there is no missing U.S. sale.

Comment 29: Petitioners argue that the Department should adjust its program to account for understated U.S. commissions. Petitioners assert that the Department correctly treated Dillinger's U.S. commissions as a direct selling expense. Petitioners argue that although the Department found at verification that some of the reported commissions were understated, the Department's program fails to adjust for this understatement. As BIA, the Department should increase all commissions by the average difference between Dillinger's reported commission and its actual commission on these sales.

Respondent agrees that the Department found a discrepancy in U.S. sales commissions for some sales, but points out that these discrepancies are *de minimis.* If the Department makes a correction, it should only be for the three sales in question.

Department's Position: After further examination of U.S. commissions, we have determined that this expense has been correctly reported. The sales referred to in the verification report include multiple observations for each sale. We have found that taking the total weighted-average of all the U.S. commissions corresponding to all observations on a given invoice results in the amount described in the verification report as the correct value for U.S. commissions (*see Analysis Memorandum,* November 6, 1995).

Comment 30: Petitioners argue that the Department should adjust U.S. price for warehousing expenses. Petitioners assert that although the record indicates that Dillinger incurred warehousing costs for its U.S. sales, Dillinger failed to report these expenses. The Department should make an adjustment to USP to account for the cost of warehousing. The Department should use, as BIA for warehousing expenses, data provided in Francosteel's financial statements.

Respondent argues that the Department verified that Francosteel incurred no warehousing expenses applicable to subject merchandise in the period of review; therefore no adjustment is necessary. According to respondent, warehousing in Francosteel's accounting documents is merely an accounting term, and not a reference to a physical warehouse.

Department's Position: We agree with the respondent. We extensively examined this topic at verification and found that Francosteel did not physically inventory, *i.e.,* warehouse, subject merchandise during the POR (as discussed in the Francosteel verification report). Consequently it did not incur any warehousing costs related to subject merchandise during the POR.

Comment 31: Petitioners argue that the Department must ensure that the value-added tax (VAT) amount added to USP is no more than the VAT amount added to/included in FMV. Petitioners assert that the Department neglected to adhere to the instructions of the CIT in *Federal-Mogul* v. *U.S.,* 862 F. Supp. 384, 394–95 (CIT 1994), requiring the Department to impose a cap on the VAT adjustment made to USP. Accordingly, the Department should ensure that the VAT amount added to USP is, in every instance, no greater than the VAT amount which is added to the FMV to which USP is being compared. The petitioners assert that the deposit rate will be affected by an unwarranted increase in USP caused by the Department's failure to apply a VAT cap.

Department's Position: In light of the Federal Circuit's decision in *Federal Mogul* v. *United States,* CAFC No. 94–1097, the Department has changed its treatment of home market consumption taxes. Where merchandise exported to the United States is exempt from the consumption tax, the Department will add to the U.S. price the absolute amount of such taxes charged on the comparison sales in the home market. This is the same methodology that the Department adopted following the decision of the Federal Circuit in *Zenith* v. *United States,* 988 F. 2d 1573, 1582 (1993), and which was suggested by that court in footnote 4 of its decision. The Court of International Trade (CIT) overturned this methodology in *Federal Mogul* v. *United States,* 834 F. Supp. 1391 (1993), and the Department acquiesced in the CIT's decision. The Department then followed the CIT's preferred methodology, which was to calculate the tax to be added to U.S. price by multiplying the adjusted U.S. price by the foreign market tax rate; the Department made adjustments to this amount so that the tax adjustment would not alter a ''zero'' pre-tax dumping assessment.

The foreign exporters in the *Federal Mogul* case, however, appealed that decision to the Federal Circuit, which reversed the CIT and held that the statute did not preclude Commerce from using the ''*Zenith* footnote 4'' methodology to calculate tax-neutral dumping assessments (*i.e.,* assessments that are unaffected by the existence or amount of home market consumption taxes). Moreover, the Federal Circuit recognized that certain international agreements of the United States, in particular the General Agreement on Tariffs and Trade (GATT) and the Tokyo Round Antidumping Code, required the calculation of tax-neutral dumping assessments. The Federal Circuit remanded the case to the CIT with instructions to direct Commerce to determine which tax methodology it will employ.

The Department has determined that the ''*Zenith* footnote 4'' methodology should be used. First, as the Department has explained in numerous administrative determinations and court filings over the past decade, and as the *Federal Circuit* has now recognized, Article VI of the GATT and Article 2 of the Tokyo Round Antidumping Code required that dumping assessments be tax-neutral. This requirement continues under the new Agreement on Implementation of Article VI of the General Agreement on Tariffs and Trade. Second, the URAA explicitly amended the antidumping law to remove consumption taxes from the home market price and to eliminate the addition of taxes to U.S. price, so that no consumption tax is included in the price in either market. The Statement of Administrative Action (p. 159) explicitly states that this change was intended to result in tax neutrality.

While the ''*Zenith* footnote 4'' methodology is slightly different from the URAA methodology, in that section 772(d)(1)(C) of the pre-URAA law required that the tax be added to United States price rather than subtracted from home market price, it does result in tax-

neutral duty assessments. In sum, the Department has elected to treat consumption taxes in a manner consistent with its longstanding policy of tax-neutrality and with the GATT.

Final Results of Review

As a result of our review, we have determined that the following margin exists:

Manufacturer/exporter	Time period	Margin (percent)
AG der Dillinger Huttenwerke.	2/4/93–7/31/94	1.42

The Department shall determine, and the Customs service shall assess, antidumping duties on all appropriate entries. Individual differences between United States price and foreign market value may vary from the percentages stated above. The Department will issue appraisement instructions directly to the Customs Service.

Furthermore, the following deposit requirements will be effective upon publication of this notice of final results of review for all shipments of plate from Germany entered, or withdrawn from warehouse, for consumption on or after the publication date, as provided for by section 751(a)(1) of the Act: (1) the cash deposit rates for the reviewed company will be the rate for that firm as stated above; (2) for previously reviewed or investigated companies not listed above, the cash deposit rate will continue to be the company-specific rate published for the most recent period; (3) if the exporter is not a firm covered in this review, or the original less than fair value (LTFV) investigation, but the manufacturer is, the cash deposit rate will be the rate established for the most recent period for the manufacturer of the merchandise; and (4) if neither the exporter nor the manufacturer is a firm covered in this review, the cash rate will be 36.00 percent. This is the ''all others'' rate from the LTFV investigation. *See Antidumping Duty Order and Amendment of Final Determination of Sales at Less Than Fair Value: Certain Cut-To-Length Carbon Steel Plate from Germany*, 58 FR 44170 (August 19, 1993). These deposit requirements, when imposed, shall remain in effect until publication of the final results of the next administrative review.

This notice serves as a final reminder to importers of their responsibility under section 353.26 of the Department's regulations to file a certificate regarding the reimbursement of antidumping duties prior to liquidation of the relevant entries during this review period. Failure to comply with this requirement could result in the Secretary's presumption that reimbursement of antidumping duties occurred and the subsequent assessment of double antidumping duties.

This notice also serves as a reminder to parties subject to administrative protective order (APO) of their responsibility concerning the disposition of proprietary information disclosed under APO in accordance with section 353.34(d) of the Department's regulations. Timely notification of return/destruction of APO materials or conversion to judicial protective order is hereby requested. Failure to comply with the regulations and the terms of an APO is a sanctionable violation.

This administrative review and this notice are in accordance with section 751(a)(1) of the Act (19 U.S.C. 1675(a)(1)) and section 353.22 of the Department's regulations.

Dated: March 20, 1996.

Susan G. Esserman,

Assistant Secretary for Import Administration.

[FR Doc. 96–7464 Filed 3–27–96; 8:45 am]

BILLING CODE 3510–DS–P

Quarterly Update to Annual Listing of Foreign Government Subsidies on Articles of Cheese Subject to an In-Quota Rate of Duty

AGENCY: Import Administration, International Trade Administration, Department of Commerce.

ACTION: Publication of quarterly update to annual listing of foreign government subsidies on articles of cheese subject to an in-quota rate of duty.

SUMMARY: The Department of Commerce (the Department), in consultation with the Secretary of Agriculture, has prepared a quarterly update to its annual list of foreign government subsidies on articles of cheese subject to an in-quota rate of duty. We are publishing the current listing of those subsidies that we have determined exist.

EFFECTIVE DATE: April 1, 1996.

FOR FURTHER INFORMATION CONTACT: Brian Albright or Maria MacKay, Office of Countervailing Compliance, Import Administration, International Trade Administration, U.S. Department of Commerce, 14th Street and Constitution Avenue NW., Washington, D.C. 20230, telephone: (202) 482–2786.

SUPPLEMENTARY INFORMATION: Section 702(a) of the Trade Agreements Act of 1979 (as amended) (the Act) requires the Department to determine, in consultation with the Secretary of Agriculture, whether any foreign government is providing a subsidy with respect to any article of cheese subject to an in-quota rate of duty, as defined in section 702(h)(4) of the Act, and to publish an annual list and quarterly updates of the type and amount of those subsidies.

The Department has developed, in consultation with the Secretary of Agriculture, information on subsidies (as defined in section 702(h)(2) of the Act) being provided either directly or indirectly by foreign governments on articles of cheese subject to an in-quota rate of duty. The appendix to this notice lists the country, the subsidy program or programs, and the gross and net amounts of each subsidy for which information is currently available.

The Department will incorporate additional programs which are found to constitute subsidies, and additional information on the subsidy programs listed, as the information is developed.

The Department encourages any person having information on foreign government subsidy programs which benefit articles of cheese subject to an in-quota rate of duty to submit such information in writing to the Assistant Secretary for Import Administration, U.S. Department of Commerce, 14th Street and Constitution Avenue NW., Washington, D.C. 20230.

This determination and notice are in accordance with section 702(a) of the Act.

Dated: March 21, 1996.

Susan G. Esserman,

Assistant Secretary for Import Administration.

APPENDIX.—SUBSIDY PROGRAMS ON CHEESE SUBJECT TO AN IN-QUOTA RATE OF DUTY

Country	Program(s)	Gross [1] subsidy	Net [2] subsidy
Austria	European Union (EU) Restitution Payments	33.1¢/lb.	33.1¢/lb.
Belgium	EU Restitution Payments	32.1¢/lb.	32.1¢/lb.

APPENDIX.—SUBSIDY PROGRAMS ON CHEESE SUBJECT TO AN IN-QUOTA RATE OF DUTY—Continued

Country	Program(s)	Gross [1] subsidy	Net [2] subsidy
Canada	Export Assistance on Certain Types of Cheese	26.1¢/lb.	26.1¢/lb.
Denmark	EU Restitution Payments	35.8¢/lb.	35.8¢/lb.
Finland	EU Restitution Payments	34.1¢/lb.	34.1¢/lb.
France	EU Restitution Payments	33.4¢/lb.	33.4¢/lb.
Germany	EU Restitution Payments	36.0¢/lb.	36.0¢/lb.
Greece	EU Restitution Payments	0.00¢/lb.	0.00¢/lb.
Ireland	EU Restitution Payments	38.1¢/lb.	38.1¢/lb.
Italy	EU Restitution Payments	71.5¢/lb.	71.5¢/lb.
Luxembourg	EU Restitution Payments	32.1¢/lb.	32.1¢/lb.
Netherlands	EU Restitution Payments	31.8¢/lb.	31.8¢/lb.
Norway	Indirect (Milk) Subsidy	19.4¢/lb.	19.4¢/lb.
	Consumer Subsidy	43.1¢/lb.	43.1¢/lb.
		62.5¢/lb.	62.5¢/lb.
Portugal	EU Restitution Payments	30.9¢/lb.	30.9¢/lb.
Spain	EU Restitution Payments	42.7¢/lb.	42.7¢/lb.
Switzerland	Deficiency Payments	187.1¢/lb.	187.1¢/lb.
U.K.	EU Restitution Payments	34.6¢/lb.	34.6¢/lb.

[1] Defined in 19 U.S.C. 1677(5).
[2] Defined in 19 U.S.C. 1677(6).

[FR Doc. 96–7465 Filed 3–27–96; 8:45 am]

BILLING CODE 3510–DS–P

Intent To Revoke Countervailing Duty Order

AGENCY: Import Administration, International Trade Administration, Department of Commerce.

ACTION: Notice of intent to revoke countervailing duty order.

SUMMARY: The Department of Commerce (the Department) is notifying the public of its intent to revoke the countervailing duty order listed below. Domestic interested parties who object to revocation of this order must submit their comments in writing not later than the last day of April 1996.

EFFECTIVE DATE: March 28, 1996.

FOR FURTHER INFORMATION CONTACT: Brian Albright or Cameron Cardozo, Office of Countervailing Compliance, Import Administration, International Trade Administration, U.S. Department of Commerce, 14th Street and Constitution Avenue NW., Washington, D.C. 20230; telephone: (202) 482–2786.

SUPPLEMENTARY INFORMATION:

Background

The Department may revoke a countervailing duty order if the Secretary of Commerce concludes that it is no longer of interest to interested parties. Accordingly, as required by the Department's regulations (at 19 C.F.R. 355.25(d)(4)), we are notifying the public of our intent to revoke the countervailing duty order listed below, for which the Department has not received a request to conduct an administrative review for the most recent four consecutive annual anniversary months.

In accordance with section 355.25(d)(4)(iii) of the Department's regulations, if no domestic interested party (as defined in sections 355.2(i)(3), (i)(4), (i)(5), and (i)(6) of the regulations) objects to the Department's intent to revoke this order pursuant to this notice, and no interested party (as defined in section 355.2(i) of the regulations) requests an administrative review in accordance with the Department's notice of opportunity to request administrative review, we shall conclude that the countervailing duty order is no longer of interest to interested parties and proceed with the revocation. However, if an interested party does request an administrative review in accordance with the Department's notice of opportunity to request administrative review, or a domestic interested party does object to the Department's intent to revoke pursuant to this notice, the Department will not revoke the order.

Countervailing duty order	
Peru:	
Pompon Chrysanthemums (C–333–601)	4/23/87 52 FR 13491

Opportunity To Object

Not later than the last day of April 1996, domestic interested parties may object to the Department's intent to revoke this countervailing duty order. Any submission objecting to the revocation must contain the name and case number of the order and a statement that explains how the objecting party qualifies as a domestic interested party under sections 355.2(i)(3), (i)(4), (i)(5), or (i)(6) of the Department's regulations.

Seven copies of any such objections should be submitted to the Assistant Secretary for Import Administration, International Trade Administration, Room B–099, U.S. Department of Commerce, 14th Street and Constitution Avenue NW., Washington, D.C. 20230.

This notice is in accordance with 19 CFR 355.25(d)(4)(i).

Dated: March 21, 1996.

Joseph A. Spetrini,

Deputy Assistant Secretary for Compliance.

[FR Doc. 96–7466 Filed 3–27–96; 8:45 am]

BILLING CODE 3510–DS–P

National Oceanic and Atmospheric Administration

[I.D. 032296A]

Small Takes of Marine Mammals Incidental to Specified Activities; Haro Strait Oceanographic Experiment

AGENCY: National Marine Fisheries Service (NMFS), National Oceanic and Atmospheric Administration (NOAA), Commerce.

ACTION: Notice of proposed authorization for a small take exemption; request for comments.

SUMMARY: NMFS has received a request from Prof. Henrik Schmidt of the Department of Engineering, Massachusetts Institute of Technology (DE/MIT), Cambridge, MA, for

authorization to take small numbers of marine mammals by harassment incidental to conducting a physical oceanography experiment that uses sound to study the flow field and mixing processes in Haro Strait, Puget Sound, WA. Under the Marine Mammal Protection Act (MMPA), NMFS is requesting comments on its proposal to authorize DE/MIT to incidentally take, by harassment, small numbers of marine mammals in the above-mentioned area between June 10, 1996, and July 5, 1996.

DATES: Comments and information must be received on or before April 29, 1996.

ADDRESSES: Comments on the application should be addressed to Chief, Marine Mammal Division, Office of Protected Resources, National Marine Fisheries Service, 1315 East-West Highway, Silver Spring, MD 20910–3225. A copy of the application, a list of references used in this document, and/or a programmatic Environmental Assessment (EA) may be obtained by writing to this address or by telephoning one of the contacts listed below.

FOR FURTHER INFORMATION CONTACT: Kenneth Hollingshead, Office of Protected Resources at 301–713–2055, or Brent Norberg, Northwest Regional Office at 206–526–6733.

SUPPLEMENTARY INFORMATION:

Background

Section 101(a)(5)(A) of the MMPA (16 U.S.C. 1361 *et seq.*) directs NMFS to allow, upon request, the incidental, but not intentional, taking of marine mammals by U.S. citizens who engage in a specified activity (other than commercial fishing) within a specified geographical region if certain findings are made and regulations are issued.

Permission may be granted if NMFS finds that the taking will have a negligible impact on the species or stock(s); will not have an unmitigable adverse impact on the availability of the species or stock(s) for subsistence uses; and the permissible methods of taking and requirements pertaining to the monitoring and reporting of such taking are set forth.

On April 30, 1994, the President signed Public Law 103–238, the MMPA Amendments of 1994. One part of this law added a new subsection 101(a)(5)(D) to the MMPA to establish an expedited process by which citizens of the United States can apply for an authorization to incidentally take small numbers of marine mammals by harassment. The MMPA defines ''harassment'' as:

> * * * any act of pursuit, torment, or annoyance which (a) has the potential to injure a marine mammal or marine mammal stock in the wild; or (b) has the potential to disturb a marine mammal or marine mammal stock in the wild by causing disruption of behavioral patterns, including, but not limited to, migration, breathing, nursing, breeding, feeding, or sheltering.

New subsection 101(a)(5)(D) establishes a 45-day time limit for NMFS review of an application followed by a 30-day public notice and comment period on any proposed authorizations for the incidental harassment of small numbers of marine mammals. Within 45 days of the close of the comment period, NMFS must either issue or deny issuance of the authorization. Summary of Request

On January 31, 1996, NMFS received a complete application from DE/MIT requesting an authorization for the harassment of small numbers of marine mammals incidental to conducting a physical oceanography experiment that uses sound to study the flow field and mixing processes in Haro Strait, in the San Juan Island Archipelago (Puget Sound) WA, just south of Stuart Island (48°39′00″ N, 123°11′00″ W).

The experiment, which will be from June 10 through July 5, 1996, for a total of 26 days, is scheduled to take advantage of the extreme ebb tides that occur only twice a year. The winter alternative is unacceptable, because weather conditions at that time of the year would make operations extremely difficult and would make marine mammal monitoring virtually impossible.

As described in the application, the experiment consists of three primary components: (1) A vertical array system, which consists of 5 vertical arrays that will be permanently moored to the bottom throughout the experiment; (2) two autonomous underwater vehicles (AUVs), which will be deployed for about 4 hours per day during maximum front formation. The AUVs are equipped for salinity, temperature and pressure sensing and have sound sources for acoustic modem communications as well as tomography sources; and (3) a set of drifters that will move with the flow field and map current speed profiles using Doppler-shift sonar methods. All systems will be integrated using the Autonomous Oceanographic Sampling Network (AOSN). Additional information on the experiment is available in the application. Information on the sound sources to be used during this experiment are provided in Table 1 of this notice.

Source D (the Long-Base-Line (LBL) transponder array) will be deployed on June 10 and will be operated (along with source E) for 4 hours/day until the end of the experiment. The vertical arrays will be deployed on June 11, and sources A, B, and C will operate daily from June 11 until the end of the experiment. Sources F and G will be used in conjunction with the AUVs on a few days before June 24 and will be used daily for 4 hours after June 24. Sources H and I, which are the Institute of Ocean Science's (IOS) side-scan sonars, will be used for 4 hours/day from June 23 until the end of the experiment on July 5, 1996.

TABLE 1.—LIST OF SOUND SOURCES TO BE USED IN THE HARO STRAIT EXPERIMENT[1]

Source	Class	Frequency (kHz)	Amplitude (dB re 1μPa)	Duration (seconds(s))	Duty cycle	Location	Depth m.
Modems	A	13–18	170	2 s.	1/min	5-moor	30
Tomography	B	1–2	170	1 s.	1/min	5-moor	50
Array tracking	C	25–30	160	0.1 s.	1/min	5-moor	200
LBL transponders	D	8–12	192	0.01 s.	10 sec	4/5 trns/ship	100/7
Ultra short-base-line tran-sponders.	E	18–22	184	0.001 s.	10 sec	ship and AUV	
LF ADCP[2]	F	115–125	194	0.0001 s.	5 sec	1 AUV	50
HF ADCP[3]	G	295–305	194	0.0001 s.	5 sec	1 AUV	50
IOS imaging[4]	H	90–110	195	0.0001	0.2 sec	1 AUV	30
IOS drifter[4]	I	90–110	195	0.0001/10s	0.2 sec	1 AUV	30

TABLE 1.—LIST OF SOUND SOURCES TO BE USED IN THE HARO STRAIT EXPERIMENT[1]—Continued

Source	Class	Frequency (kHz)	Amplitude (dB re 1μPa)	Duration (seconds(s))	Duty cycle	Location	Depth m.
Low frequency tomography.	J	0.06–0.3	160	1 s.	10 sec	ship	10

[1] Note that some sources are produced out of more than one transducer.
[2] Low frequency Doppler-shift current profiler.
[3] High frequency Doppler-shift current profiler.
[4] Side-scan Doppler-shift sonar onboard the AUVs (imaging) or the drifter.

The low-frequency tomography source (source J) will be used for 4 hours/day from June 18–June 20, 1996.

Description of Marine Mammals Affected by the Activity

The species of marine mammals that are likely to be present in the affected area at the time of the experiment include the harbor porpoise (*Phocoena phocoena*), killer whale (*Orcinus orca*), Dall's porpoise (*Phocoenoides dalli*), and harbor seal (*Phoca vitulina*). Additional species that are rare or only occasionally seen in the area at the time of the experiment include: Minke whale (*Balaenoptera acutorostrata*), elephant seal (*Mirounga angustirostris*); Pacific white-sided dolphin (*Lagenorhynchus obliquidens*), northern sea lion (*Eumetopias jubatus*), California sea lion (*Zalophus californianus*), humpback whale (*Megaptera novaengliae*), and gray whale (*Eschrichtius robustus*). General information on these species can be found in Barlow *et al.* (1995)[5]. More specific information on marine mammals species in Puget Sound waters can be found in the application, which is available upon request (see **ADDRESSES**), and does not need to be repeated here.

Potential Effects on Marine Mammals

The potential effects on marine mammals from sounds transmitted into the water include harassment, temporary or permanent hearing loss, and short-term habitat displacement. The most severe effect can be death or permanent hearing loss, with less severe effects including pain, masking of communication or echolocation signals, habitat avoidance, increased stress, and behavioral or social disruption (Richardson *et al.* 1991 as cited in the application). Of these reactions, permanent hearing loss and habitat exclusion are the primary effects that have the possibility of causing injury to an animal or group of animals. As detailed below, for the Haro Strait experiment, hearing loss is extremely unlikely, because sources' amplitudes are not high enough to cause damage except at extremely close distances (< 1 m). The amount of habitat that may be excluded is likely to be small in comparison to the total range of these animals, and any observed harmful effects can be mitigated with an effective monitoring plan (described below), which will be in place prior to beginning the experiment.

Permanent Hearing Loss

In humans and other terrestrial mammals, permanent hearing loss may occur from exposure to very loud transient sounds. Lengthy exposure to lower amplitude sounds can also cause permanent hearing loss (Richardson *et al.* 1995). However, none of the sources listed in Table 1 is considered a continuous source. In humans and other terrestrial animals, an impulsive sound with a received sound level of 155 to 160 dB above absolute hearing thresholds may cause permanent hearing damage (Greenlaw 1987, Kryter 1985). While it is unknown if similar levels cause damage in marine mammals (Richardson *et al.* 1991, 1995), until better information is available for marine mammals, NMFS proposes to adopt this level as the onset of permanent hearing damage in marine mammals. NMFS clarifies, however, that both the source and the marine mammal's hearing need to be within the same frequency for this damage to potentially take place.

Using 155 dB above hearing threshold as a first approximation of the received level required for permanent hearing damage in marine mammals, the applicant calculated a radius within which each source (listed in Table 1 of this notice) might affect permanent hearing loss for those three species present in the area for which data is available (harbor porpoise/Dall's porpoise, harbor seal, and killer whale). Calculations indicate that marine mammals would need to be closer than .25 m to source D in order to potentially receive hearing damage; for other sources, animals would need to be even closer (please refer to Table 3 in the application for actual distances). However, the applicant presumes that the near-field effects might cause the distance to be slightly greater (but less than 1 m, than calculated by spherical spreading alone. As a result, NMFS and the applicant believe that there is virtually no possibility of inflicting permanent hearing damage on any marine mammals.

Temporary Hearing Loss

Temporary threshold shift (TTS) is an increase in an individual animal's hearing threshold in response to a loud sound (ARPA, 1995). Until TTS dissipates (minutes to hours), and original hearing abilities return, an animal may not perceive low amplitude sounds that were normally within its hearing. This is expected to have only a negligible impact on those marine mammals in the immediate area of the experiment, as animals are expected to move away from sounds that inflict discomfort on them. Because there are no studies of TTS effects in marine mammals (Richardson *et al.* 1995), comparisons with data on humans may be useful and relevant. In humans, onset of TTS is approximately at 80–100 dB over threshold (ARPA 1995).

Incidental Harassment Takes

In addition to the zone of hearing loss or temporary impairment (mentioned above), Richardson *et al.* (1991, 1995) have identified three zones of influence that may have different effects on marine mammals.

(1) *Zone of audibility (ZOA).* The ZOA is the region where a marine mammal can be expected to hear a sound. It will fluctuate based upon ambient noise level and the hearing threshold of the animal. Using spherical and cylindrical spreading models less absorption, the ZOA for killer whales, harbor porpoise and harbor seals are predicted to be limited to the line-of-sight between the animals and the source(s) for the loudest sources and up to 2 km for sources with lower sound pressure levels. It should be recognized,

[5] A list of references used in this document can be obtained by writing to the address provided above (see **ADDRESSES**).

however, that NMFS does not consider simply hearing noise from an activity to mean that the animals are being harassed as marine mammals in the coastal environment are continually subject to noise from a number of sources, both natural and anthropogenic.

(2) *Zone of responsiveness (ZOR).* The ZOR is the region where a marine mammal may (or may not) behaviorally respond to a sound source. For the sound sources listed in Table 1 of this notice, the predicted ZOR is less than 500 m of most sources except source A, which has a ZOR approximately 2.5 km for killer whales; source D, which has a ZOR approximately 6 km for killer whales and 4 km for harbor porpoise; and source E, which has a ZOR approximately 2 km for killer whales (Schmidt 1996). Because source A is located in five different locations, it will have a ZOR that comprises the entire area inside the arrays in addition to the 2.5 km outside exterior to each array. Table 6 in the application contains the estimated ZOR for each source.

It should be noted that these ZORs are based upon limited information. As a result, the ZORs may be larger or smaller than predicted, depending upon the marine mammal species, the level of background noise, habituation, and the behavioral state of the animals involved.

(3) *Zone of discomfort (ZOD).* The ZOD is the region in which sound levels are expected to be uncomfortable to marine mammals. It is presumed that marine mammals will avoid this zone when the sources are operating and those within the ZOD will leave the area, although in some cases avoidance may not be possible, especially if geological features or water conditions make exiting the area impractical. To mitigate this possibility, the applicant has established a monitoring plan that is described below.

Based upon the level found to cause discomfort in humans (Greenlaw 1987), NMFS and the applicant, propose a contour of 90 dB above threshold hearing to define the ZOD. For killer whales and harbor porpoise, 90 dB above threshold is approximately 135–140 dB for a wide range of frequencies. At least for killer whales, this level is supported by observation (Bain 1995).

For the three species for which audiogram data are available, the applicant's model predicts a small ZOD (<=50 m) for all sources except for source A, which has a predicted ZOD of 173 m for killer whales, source D, with a ZOD of 386 m for killer whales and 220 m for harbor porpoise and source E, which has a ZOD of 158 m for killer whales. Table 7 in the application contains the estimated ZOD for each source.

Habitat Exclusion

The area of the experiment is occupied regularly by harbor porpoise, Dall's porpoise, killer whales and harbor seals and to a significantly lesser extent, by minke whales, elephant seals, Pacific white-sided dolphin, northern sea lions, California sea lions, humpback whales, and gray whales. While sounds from the experiment may be audible to some or all of these species, behavioral effects should not be noticeable until the sounds reach some level of discomfort. As a result of this discomfort, there is the possibility that the research may cause some marine mammals to move out of their preferred habitat.

(1) *Harbor porpoise.* While the immediate area of the experiment does not appear to be primary habitat for harbor porpoise (Baird and Guenther 1994, Raum-Suryan pers. comm. as cited in Schmidt 1996) because of similarity to acoustic deterrent devices (Olesiuk *et al.* 1995), it is predicted that sources D and E will result in the temporary displacement of harbor porpoise, especially on the western side of Haro Strait (Schmidt 1996).

(2) *Killer whale.* Killer whales forage over a large area of water in northern Puget Sound (Schmidt 1996). Therefore, it is highly unlikely that exclusion from the relatively small area of the experiment would have more than a negligible impact on the stock. However, if the sources impeded north-south passage between Haro Strait and Boundary Pass, there might be reason for some concern. While this is not anticipated, mitigation measures are expected to preclude this occurrence.

(3) *Dall's porpoise.* While there is evidence that Dall's porpoise are less disturbed by boats than harbor porpoise are (Osmek *et al.* 1995), other information (McIntyre pers. comm. 1996) indicates that Dall's porpoise can be affected by sonar. Alternatively, other research results of sound effects on Dall's porpoise (Jones *et al.* 1986) are equivocal. As a result of this lack of evidence, and because of the similarity between Dall's porpoise and harbor porpoise, NMFS will presume that Dall's porpoise behavior to the experiment's sound sources will be similar to that observed for harbor porpoise.

(4) *Harbor seal.* The projected ZOR for harbor seal is less than 400 m and the ZOD is less than 40 m for even the loudest source (source D). Because these zones are small, and because the experiment will end prior to the main onset of pupping (Suryan 1995), NMFS does not believe that this experiment would have more than a negligible impact on harbor seals.

(5) *Other marine mammal species.* The remaining marine mammal species identified in this section are considered uncommon in the area. As a result, while this experiment may result in the incidental harassment of an individual animal that might enter into the area of the experiment, the experiment itself is unlikely to result in more than a negligible impact on the species or stock of which the animal is a member.

Monitoring

A monitoring plan has been developed and will be conducted by Patrick Miller, Ph.D. candidate, Marine Bioacoustics Lab, Woods Hole Oceanographic Institution and the Department of Biology, MIT (DB/MIT). In addition, an advisory board for monitoring this activity's impacts on marine mammals has been established.

The goals of the monitoring plan are:

(1) *To document the number of Level B harassment takes by species and number.* To accomplish this task, a cliffside shore station will be established near the sound sources, and area surveys will be conducted using a small inflatable craft. Sampling from both the boat and the cliff site will be based on the schedule of usage of the sound sources to ensure an accurate estimate of the total number of animals present and potentially harassed by the sources. This requirement will vary depending upon which sound sources are activated, especially sources D and E, which are the sources with the largest ZOR. When sources D and E are not operating, the size of the ZOR is small (less than 1 km around each of the sound sources), and censusing animals in this area can be accomplished using a shore station on the western bluff of Spieden Island. When sources D and E are operating, the size of the ZOR is much larger, with a maximum radius of about 6 km around the D source (DE/MIT 1996). To accurately estimate the number of animals by species in an area of water this size will require the use of both the shore station on Spieden Island and a boat to conduct censuses in the area farthest away from Spieden Island. The boat will do point censusing according to NMFS-approved methodologies in several parts of the ZOR while the source is operating.

Acoustical behavior of killer whales will be studied using the vertical arrays, a hydrophone station on Spieden Island, and a towed hydrophone array from the killer whale boat. Specifically, DB/MIT will document changes in vocalization rates and repertoires when the sources

are operating from baseline activity in and around the area of the experiment. Any observed change in killer whale acoustical activity that is directly correlated to a sound produced by the experiment will be classified as a ''take'' by harassment.

(2) *To collect data to mitigate potential effects on marine mammals, especially habitat exclusion for harbor porpoise and killer whales.* To obtain a sufficient number of baseline observations needed to detect a large change in mean abundance of harbor porpoise within the time an animal would be expected to suffer deleterious effects, harbor porpoise observations will begin on May 16, 1996, (25 days prior to startup of the experiment) using a shore station to measure their abundance. To provide a good view of the ZOR on the western side of Haro Island, this shore station will be established on the bluff at Wymond Pt., Sidney Island.

For killer whales, in addition to analyzing data collected in previous years, DB/MIT will conduct a period of baseline observations on killer whale travel behavior in the area. DB/MIT will record the likelihood that killer whales pass from north to south given an approach to the study area.

(3) *To collect data on the effects of sound on those marine mammals present in or near the study area.* Data from shore stations and censusing vessels will be used to document the abundance and distribution of marine mammals in relation to the sound sources over a wide range of amplitude exposures. In addition, monitoring will determine the size of the ZOR for those species present near the sources, compare these measurements to the pre-test calculated ZOR size, and determine displacement for harbor porpoise, killer whales and harbor seals. For killer whales especially, behavior will be monitored by vessel, and data will be collected on swim direction and speed, and group spacing and arrangement. Finally, recovery periods for all species will be determined through a 3-week post-experiment monitoring program.

Mitigation

Mitigation measures include: (1) Developing and incorporating a ramp-up of sound sources A and C over 0.25 sec; (2) incorporating a coded sequence mechanism for shutting off source D; (3) hardwiring the maximum output of source A down from 185 dB (re 1μPa) to 170 dB @ 1 m. and (4) developing a protocol for shutting down sources upon the approach of killer whales in order to use the vertical arrays to record and analyze their sounds.

National Environmental Policy Act (NEPA)

NMFS has conducted a review of the potential impacts from the issuance of an incidental harassment authorization to DE/MIT and has determined that there will be no more than a short-term, negligible impact on marine mammals from the issuance of the harassment authorization. For that reason, NMFS has determined that issuance of an incidental harassment authorization to DE/MIT is categorically excluded (as defined in 40 CFR 1508.4) from the preparation of either an environmental impact statement or an EA under NEPA and section 6.02.c.3(i) of NOAA Administrative Order 216–6 for Environmental Review Procedures (published August 6, 1991).

A programmatic EA on issuing incidental harassment authorizations under section 101(a)(5)(D) of the MMPA, which was released in 1995, is available upon request (see **ADDRESSES**).

Conclusions

NMFS believes that most of the acoustic sources proposed for use in this experiment are of insufficient amplitude and duty cycle to warrant an incidental harassment authorization (literally thousands of similar acoustic devices are in use daily in U.S. waters on vessels as fish finders, bottom sonars, and as acoustic deterrent devices in commercial fisheries); however, because of recent public concern over Scripp's Institution of Oceanography's acoustic thermometry of ocean climate, oceanographic researchers are correctly taking a cautious approach and applying for incidental harassment authorizations to ensure their projects go forward.

NMFS has determined preliminarily that the short-term impact on marine mammals from conducting a physical oceanography experiment between June 10 and July 5, 1996, using high-frequency sound to study the flow field and mixing processes in Haro Strait, Puget Sound, WA, may result in a short-term modification in behavior by certain species of cetaceans. While behavioral modifications may be made by these species of cetaceans to avoid noise, this behavioral change is expected to have only a negligible impact on the animals. However, the mitigation and monitoring measures that will be part of the authorization, if issued, would provide additional protection to ensure that the project's impact on marine mammals is at the lowest level practicable. NMFS has also determined that this experiment will not have an unmitigable adverse impact on the availability of this stock for subsistence uses.

As a result, NMFS proposes to issue an incidental harassment authorization for approximately 60 days for the above described experiment and post-experiment monitoring, provided the above mentioned mitigation and monitoring requirements are incorporated.

Information Solicited

NMFS requests interested persons to submit comments, information, and suggestions concerning this request (see **ADDRESSES**).

Dated: March 22, 1996.

Patricia A. Montanio,

Deputy Director, Office of Protected Resources, National Marine Fisheries Service.

[FR Doc. 96–7624 Filed 3–25–96; 4:31 pm]

BILLING CODE 3510–22–W

[I.D. 031996B]

Western Pacific Fishery Management Council; Public Meeting

AGENCY: National Marine Fisheries Service (NMFS), National Oceanic and Atmospheric Administration (NOAA), Commerce.

ACTION: Notice of public meeting.

SUMMARY: The Western Pacific Fishery Management Council will hold its 89th meeting.

DATES: The meeting will be held on April 24–26, 1996. The Council's standing committees will meet from 8:00 a.m. to 5:00 p.m. on April 24. The full Council will meet from 8:30 a.m. to 5:00 p.m. on April 25–26. There will be a fishermen's forum from 4:00 p.m. to 6:00 p.m. on April 25.

ADDRESSES: The meeting will be held at the Ala Moana Hotel, Garden Lanai Room, 410 Atkinson Dr., Honolulu, HI; telephone: (808) 955–4811.

Council address: Western Pacific Fishery Management Council, 1164 Bishop St., Suite 1405, Honolulu, HI, 96813.

FOR FURTHER INFORMATION CONTACT: Kitty M. Simonds, Executive Director; telephone: 808–522–8220.

SUPPLEMENTARY INFORMATION: The Council will discuss and may take action on the following agenda items:

1. Reports from the islands;

2. Reports from fishery agencies and organizations, including enforcement agencies, and plan to require a Vessel Monitoring System (VMS) on all foreign vessels;

3. Ecosystems and habitat, including:

(a) Report on ocean circulation model, and

(b) Plan for coral reef assessment;

4. Pelagic fishery issues, including:

(a) 1995 draft annual report island-area summaries,

(b) Decline in 1994 Hawaii swordfish landings,

(c) Bycatch issues,

(d) Status of request for single-Council designation for management of domestic pelagic fisheries in the Pacific,

(e) NMFS swordfish research,

(f) Plan for U.S. vessels fishing in the Pacific to report catch and effort and establishment of control date, and

(g) Comprehensive data collection need and strategy for implementation.

5. Crustaceans, including:

(a) Status of Amendment 9,

(b) 1996 quota forecast,

(c) VMS evaluation,

(d) NMFS lobster research, and

(e) Request for experimental fishing permit;

6. Bottomfish issues, including:

(a) 1995 draft annual report island-area summaries,

(b) Department of Land and Natural Resources progress with a management plan for Main Hawaiian Island Onaga and Ehu, and

(c) Reconsideration of Northwestern Hawaiian Islands management system;

7. Native rights and indigenous fishing issues, including: (a) Status of relevant Magnuson Fishery Conservation and Management Act (Magnuson Act) amendments, and

(b) Community-based planning;

8. Program planning, including:

(a) NMFS consolidation of regulations and strategic planning;

(b) University of Hawaii Sea Grant - future of fishery management,

(c) Status of Magnuson Act reauthorization, and

(d) Status of Western Pacific Fisheries Information Network (WesPac FIN);

9. Administrative matters; and

10. Other business as required.

Special Accommodations

This meeting is physically accessible to people with disabilities. Requests for sign language interpretation or other auxiliary aids should be directed to Kitty M. Simonds, 808–522–8220 (voice) or 808–522–8226 (fax), at least 5 days prior to meeting date.

Dated: March 20, 1996.

Richard W. Surdi,

Acting Director, Office of Fisheries Conservation and Management, National Marine Fisheries Service.

[FR Doc. 96–7518 Filed 3–27–96; 8:45 am]

BILLING CODE 3510–22–F

COMMISSION ON CIVIL RIGHTS

Agenda and Notice of Public Meeting of the Florida Advisory Committee

Notice is hereby given, pursuant to the provisions of the rules and regulations of the U.S. Commission on Civil Rights, that a meeting of the Florida Advisory Committee to the Commission will convene at 9:00 a.m. and adjourn at 11:00 a.m. on Tuesday, April 23, 1996, at the Holiday Inn I–95 North, 14670 Duval Road, Jacksonville, Florida 32229. The purpose of the meeting is to hold a press conference to release the report, *Racial and Ethnic Tensions in Florida*; discuss progress and/or problems in the State and Nation; and discuss plans to follow-up on the report.

Persons desiring additional information, or planning a presentation to the Committee, should contact Committee Chairperson Rabbi Solomon Agin, 813–433–0018, or Bobby D. Doctor, Director of the Southern Regional Office, 404–730–2476 (TDD 404–730–2481). Hearing-impaired persons who will attend the meeting and require the services of a sign language interpreter should contact the Regional Office at least five (5) working days before the scheduled date of the meeting.

The meeting will be conducted pursuant to the provisions of the rules and regulations of the Commission.

Dated at Washington, DC, March 20, 1996.

Carol-Lee Hurley,

Chief, Regional Programs Coordination Unit.

[FR Doc. 96–7573 Filed 3–27–96; 8:45 am]

BILLING CODE 6335–01–P

Agenda and Notice of Public Meeting of the Florida Advisory Committee

Notice is hereby given, pursuant to the provisions of the rules and regulations of the U.S. Commission on Civil Rights, that a meeting of the Florida Advisory Committee to the Commission will convene at 3:00 p.m. and adjourn at 6:00 p.m. on Tuesday, April 23, 1996, at the Hotel Inter Continental, 100 Chopin Plaza, Miami, Florida 33121. The purpose of the meeting is to hold a press conference to release the report, *Racial and Ethnic Tensions in Florida*; discuss progress and/or problems in the State and Nation; and discuss plans to followup on the report.

Persons desiring additional information, or planning a presentation to the Committee, should contact Committee Chairperson Rabbi Solomon Agin, 813–433–0018, or Bobby D. Doctor, Director of the Southern Regional Office, 404–730–2476 (TDD 404–730–2481). Hearing-impaired persons who will attend the meeting and require the services of a sign language interpreter should contact the Regional Office at least five (5) working days before the scheduled date of the meeting.

The meeting will be conducted pursuant to the provisions of the rules and regulations of the Commission.

Dated at Washington, DC, March 20, 1996.

Carol-Lee Hurley,

Chief, Regional Programs Coordination Unit.

[FR Doc. 96–7574 Filed 3–27–96; 8:45 am]

BILLING CODE 6335–01–P

Agenda and Notice of Public Meeting of the Indiana Advisory Committee

Notice is hereby given, pursuant to the provisions of the rules and regulations of the U.S. Commission on Civil Rights, that a meeting of the Indiana Advisory Committee to the Commission will convene at 12:45 p.m. and adjourn at 5:00 p.m. on Thursday, April 18, 1996, at the Embassy Suites, 110 West Washington Street, Indianapolis, Indiana 46204. The purpose of the meeting is to hold an Indiana Consultation: Focus on Affirmative Action.

Persons desiring additional information, or planning a presentation to the Committee, should contact Committee Chairperson Paul Chase, 317–920–3190, or Constance Davis, Director of the Midwestern Regional Office, 312–353–8311 (TDD 312–353–8362). Hearing-impaired persons who will attend the meeting and require the services of a sign language interpreter should contact the Regional Office at least five (5) working days before the scheduled date of the meeting.

The meeting will be conducted pursuant to the provisions of the rules and regulations of the Commission.

Dated at Washington, DC, March 20, 1996.

Carol-Lee Hurley,

Chief, Regional Programs Coordination Unit.

[FR Doc. 96–7575 Filed 3–27–96; 8:45 am]

BILLING CODE 6335–01–P

Agenda and Notice of Public Meeting of the Kentucky Advisory Committee

Notice is hereby given, pursuant to the provisions of the rules and regulations of the U.S. Commission on Civil Rights, that a meeting of the Kentucky Advisory Committee to the Commission will convene at 1:00 p.m. and adjourn at 5:00 p.m. on Thursday,

April 25, 1996, at the Radisson Plaza, 369 West Vine Street, Lexington, Kentucky 40507. The meeting will include a discussion of a draft report on ''Bigotry-Related Violence in Kentucky'', discussion of civil rights problems and progress in the State and Nation, and planning for future activity.

Persons desiring additional information, or planning a presentation to the Committee, should contact Committee Chairperson Porter Peeples, 606–233–1561 or Robert L. Knight, Civil Rights Analyst, Southern Regional Office, 404–730–2476 (TDD 404–730–2481). Hearing-impaired persons who will attend the meeting and require the services of a sign language interpreter should contact the Regional Office at least five (5) working days before the scheduled date of the meeting.

The meeting will be conducted pursuant to the provisions of the rules and regulations of the Commission.

Dated at Washington, DC, March 20, 1996.

Carol-Lee Hurley,

Chief, Regional Programs Coordination Unit.

[FR Doc. 96–7576 Filed 3–27––96; 8:45 am]

BILLING CODE 6335–01–P

Agenda and Notice of Public Meeting of the Pennsylvania Advisory Committee

Notice is hereby given, pursuant to the provisions of the rules and regulations of the U.S. Commission on Civil Rights, that a meeting of the Pennsylvania Advisory to the Commission will convene at 10:30 a.m. and adjourn at 3:30 p.m. on Friday, May 3, 1996, at the U.S. Department of Justice, Community Relations Service, Conference Room 208, Second and Chestnut Streets, Philadelphia, Pennsylvania 19106. The purpose of the meeting is to discuss the Committee's current project proposal and plan its project activity on affirmative action for fiscal year 1996. The Committee anticipates inviting speakers to inform the Committee on affirmative action issues in Pennsylvania.

Persons desiring additional information, or planning a presentation to the Committee, should contact Committee Chairperson Joseph Fisher, 215–351–0750, or Ki-Taek Chun, Director of the Eastern Regional Office, 202–376–7533 (TDD 202–376–8116). Hearing-impaired persons who will attend the meeting and require the services of a sign language interpreter should contact the Regional Office at least five (5) working days before the scheduled date of the meeting.

The meeting will be conducted pursuant to the provisions of the rules and regulations of the Commission.

Dated at Washington, DC, March 21, 1996.

Carol-Lee Hurley,

Chief, Regional Programs Coordination Unit.

[FR Doc. 96–7577 Filed 3–27–96; 8:45 am]

BILLING CODE 6335–01–P

Agenda and Notice of Public Meeting of the Vermont Advisory Committee

Notice is hereby given, pursuant to the provisions of the rules and regulations of the U.S. Commission on Civil Rights, that a meeting of the Vermont Advisory to the Commission will convene at 9:30 a.m. and adjourn at 4:30 p.m. on Wednesday, May 15, 1996, at the Memorial Room at City Hall, 39 Main Street, Montpelier, Vermont 05602. The purpose of the meeting is to plan project activity based on information gathered at the meeting from civil rights organizations and members of the community on the status of civil rights in Vermont.

Persons desiring additional information, or planning a presentation to the Committee, should contact Committee Chairperson Dr. Samuel B. Hand, 802–656–3180 or Ki-Taek Chun, Director of the Eastern Regional Office, 202–376–7533 (TDD 202–376–8116). Hearing-impaired persons who will attend the meeting and require the services of a sign language interpreter should contact the Regional Office at least five (5) working days before the scheduled date of the meeting.

The meeting will be conducted pursuant to the provisions of the rules and regulations of the Commission.

Dated at Washington, DC, March 20, 1996.

Carol-Lee Hurley,

Chief, Regional Programs Coordination Unit.

[FR Doc. 96–7578 Filed 3–27–96; 8:45 am]

BILLING CODE 6335–01–P

CONSUMER PRODUCT SAFETY COMMISSION

Sunshine Act Meeting

''FEDERAL REGISTER'' CITATION OF PREVIOUS ANNOUNCEMENT: [insert FR citation].

PREVIOUSLY ANNOUNCED TIME AND DATE OF MEETING: 10:00 a.m., March 27, 1996.

CHANGES IN MEETING: Meeting concerning Charcoal Labeling has been canceled and rescheduled for Tuesday, April 2, 1996.

For a recorded message containing the latest agenda information, call (301) 504–0709.

CONTACT PERSON FOR ADDITIONAL INFORMATION: Sadye E. Dunn, Office of the Secretary, 4330 East West Highway, Bethesda, MD 20207 (301) 504–0800.

Dated: March 26, 1996.

Sadye E. Dunn,

Secretary.

[FR Doc. 96–7755 Filed 3–26–96; 2:41 pm]

BILLING CODE 6355–01–M

Sunshine Act Meeting

TIME AND DATE: 10:00 a.m., Tuesday, April 2, 1996.

LOCATION: Room 420, East West Towers, 4330 East West Highway, Bethesda, Maryland.

STATUS: Open to the Public.

MATTER TO BE CONSIDERED:

Charcoal Labeling

The staff will brief the Commission on a draft final rule that would revise the label currently required by the Commission's regulations for packages of charcoal. The label addresses the hazard of inhalation of carbon monoxide that collects when charcoal is burned in confined areas.

For a recorded message containing the latest agenda information, call (301) 504–0709.

CONTACT PERSON FOR ADDITIONAL INFORMATION: Sadye E. Dunn, Office of the Secretary, 4330 East West Highway, Bethesda, MD 20207 (301) 504–0800.

Dated: March 26, 1996.

Sadye E. Dunn,

Secretary.

[FR Doc. 96–7756 Filed 3–26–96; 2:41 pm]

BILLING CODE 6355–01–M

DEPARTMENT OF DEFENSE

Office of the Secretary

Establishment of the Marshall Center Board of Visitors

ACTION: Notice.

SUMMARY: The Marshall Center Board of Visitors is being established by direction of the Secretary of Defense and in accordance with the provisions of Pub. L. 92–463, the ''Federal Advisory Committee Act.''

The Board will provide advice on matters related to the mission, policy, faculty, students, curricula, educational methods, research, facilities and administration of the Marshall Center. The Marshall Center is a part of the United States European Command, and is located in Garmisch, Germany. The Center's mission is to foster the development defense institutions and

security structures compatible with democratic processes and civilian control among the nations of central Europe and the former Soviet Union.

The Board will be composed of a balanced mix of approximately 15 members who will have expertise relevant to the functions to be performed, and will representatives from the U.S. Congress, former senior government and military officials, and distinguished citizens from academia, business, industry, and other professions associated with national security affairs.

For further information regarding the Board, contact: Colonel Frank Willingham, at (703) 697–1386.

Dated: March 22, 1996.

Patricia L. Toppings,

Alternate OSD Federal Register Liaison Officer, Department of Defense.

[FR Doc. 96–7469 Filed 3–27–96; 8:45 am]

BILLING CODE 5000–04–M

Government-Industry Advisory Committee on the Operation and Modernization of the National Defense Stockpile

ACTION: Notice of meeting.

SUMMARY: The fifth meeting of this committee will be held on April 10, 1996, at the Defense Logistics Agency Headquarters Complex, Fort Belvoir, VA. The meeting is open to the public. This committee was established under Public Law 102–484. The meeting time and agenda are as follows:

TIME: 9:00 a.m. to 2:30 p.m.

AGENDA: The Committee will hear reports from the working group on Sales Methodology and from the working group on Stockpile Modernization. For additional information contact Tom Meeker at 703–767–6476.

Dated: March 22, 1996.

Patricia L. Toppings,

Alternate OSD Federal Register Liaison Officer, Department of Defense.

[FR Doc. 96–7470 Filed 3–27–96; 8:45 am]

BILLING CODE 5000–04–M

Department of the Navy

Chief of Naval Operations (CNO) Executive Panel; Closed Meeting

Pursuant to the provisions of the Federal Advisory Committee Act (5 U.S.C. App. 2), notice is hereby given that the Chief of Naval Operations (CNO) Executive Panel will meet 23 April 1996 from 10:00 a.m. to 11:30 a.m. at the office of the Chief of Naval Operations, 2000 Navy Pentagon, Washington, DC 20350-2000. This session will be closed to the public.

The purpose of this meeting is to conduct the mid-term briefing of the Naval Support to the Land Battle Task Force to the Chief of Naval Operations. These matters constitute classified information that is specifically authorized by Executive order to be kept secret in the interest of national defense and are, in fact, properly classified pursuant to such Executive Order. Accordingly, the Secretary of the Navy has determined in writing that the public interest requires that all sessions of the meeting be closed to the public because they will be concerned with matters listed in section 552b (c) (1) of title 5, United States Code.

For further information concerning this meeting contact: Janice Graham, Assistant for CNO Executive Panel Management, 4401 Ford Avenue, Suite 601, Alexandria, Virginia 22302-0268, Telephone Number: (703) 681-6205.

Dated: March 19, 1996

M. A. Waters,

LCDR, JAGC, USN, Federal Register Liaison Officer.

[FR Doc. 96–7580 Filed 3–27–96; 8:45 am]

BILLING CODE 3810–FF–P

Notice of Intent To Grant Exclusive Patent License; Lumitox Gulf L.C.

SUMMARY: The Department of the Navy hereby gives notice of its intent to grant to Lumitox Gulf L.C., a revocable, nonassignable, partially exclusive license in the United States to practice the Government-owned invention described in U.S. Patent Nos. 5,130,251 entitled ''Stress-Resistant Bioluminescent Dinoflagellates''; 5,143,545 entitled ''Antifouling Marine Coatings''; and 5,192,667 entitled ''Method for Evaluating Anti-Fouling Paints.''

Anyone wishing to object to the grant of this license has 60 days from the date of this notice to file written objections along with supporting evidence, if any. Written objections are to be filed with the Office of Naval Research, ONR 00CC, Ballston Tower One, 800 North Quincy Street, Arlington, Virginia 22217–5660.

FOR FURTHER INFORMATION CONTACT: Mr. R.J. Erickson, Staff Patent Attorney, Office of Naval Research, ONR 00CC, Ballston Tower One, 800 North Quincy Street, Arlington, Virginia 22217–5660, telephone (703) 696–4001.

Dated: March 19, 1996.

M. A. Waters,

LCDR, JAGC, USN, Federal Register Liaison Officer.

[FR Doc. 96–7579 Filed 3–27–96; 8:45 am]

BILLING CODE 3810–01–P

DEPARTMENT OF ENERGY

Federal Energy Regulatory Commission

[Docket No. ER96–1310–000]

Kentucky Utilities Co.; Notice of Filing

March 22, 1996.

Take notice that on March 14, 1996, Kentucky Utilities Company (KU), tendered for filing information on transactions that occurred during February 16, 1996 through February 29, 1996, pursuant to the Power Services Tariff accepted by the Commission in Docket No. ER95–854–000.

Any person desiring to be heard or to protest said filing should file a motion to intervene or protest with the Federal Energy Regulatory Commission, 888 First Street NE., Washington, DC 20426, in accordance with Rules 211 and 214 of the Commission's Rules of Practice and Procedure (18 CFR 385.211 and 18 CFR 385.214). All such motions or protests should be filed on or before April 5, 1996. Protests will be considered by the Commission in determining the appropriate action to be taken, but will not serve to make the protestants parties to the proceeding. Any person wishing to become a party must file a motion to intervene. Copies of this filing are on file with the Commission and are available for public inspection.

Lois D. Cashell,

Secretary.

[FR Doc. 96–7520 Filed 3–27–96; 8:45 am]

BILLING CODE 6717–01–M

[Docket Nos. CP95–149–001 and MT96–11–000]

KO Transmission Co.; Notice of Initial Tariff Filing

March 22, 1996.

Take notice that on March 21, 1996, KO Transmission Company (KO), 139 East Fourth Street, Cincinnati, Ohio 45202, filed in Docket No CP95–149–001 and MT96–11–000 its FERC Gas Tariff, Original Volume No. 1, with a proposed effective date of April 22, 1996.

KO states that the initial tariff filing reflects the required modifications to the general terms and conditions and its cost of service in compliance with the Commission's February 5, 1996, order granting KO its certificate in Docket No. CP95–149–000, 74 FERC ¶ 61,101.

Any person desiring to be heard or to make a protest the subject filing should file a motion to intervene or protest with the Federal Energy Regulatory Commission, 888 First Street, N.E., Washington, D.C. 20426, in accordance with the requirements of the Commission's Rules of Practice and Procedures, 18 CFR 385.214 or 385.211 and the Regulation under the Natural Gas Act, 18 CFR 157.10. All such motions and protests should be filed on or before April 2, 1996. Protests will be considered by the Commission in determining the appropriate action to be taken, but will not serve to make protestants parties to the proceeding. Any person wishing to become a party to a proceeding or to participate as a party in any hearing therein must file a motion to intervene in accordance with the Commission's Rules. Copies of this filing are on file with the Commission and are available for public inspection.

Lois D. Cashell,

Secretary.

[FR Doc. 96–7521 Filed 3–27–96; 8:45 am]

BILLING CODE 6717–01–M

[Docket No. RP96–179–000]

Southern Natural Gas Co.; Notice of Proposed Changes to FERC Gas Tariff

March 22, 1996.

Take notice that on March 19, 1996, Southern Natural Gas Company (Southern) tendered for filing as part of its FERC Gas Tariff, Seventh Revised Volume No. 1, the following tariff sheets to become effective April 1, 1996:

First Revised Sheet No. 142
Original Sheet No. 142a

Southern states that the purpose of this filing is to implement two Tariff revisions proposed by Southern in its Stipulation and Agreement filed on March 15, 1996, in Docket Nos. RP89–224, *et al.*, and approved by the Commission in its order issued on September 29, 1995.

Southern states that the Tariff provisions proposed to be implemented in this filing are (1) to establish a two-day trading period for imbalances after the end of each month, and (2) to allow storage customers to use their gas in storage or firm storage capacity to remedy all or part of their monthly imbalances. Although Southern is not required to implement these provisions until the first of the month after the Commission issues an order on rehearing in Docket Nos. RP89–224, *et al.*, it prefers to place these provisions into effect April 1, 1996, so that such elections are available for application against March 1996 imbalances. Since March 1996 imbalances are subject to a new cash-out mechanism approved in Docket No. RP96–132, it is preferable from a programming standpoint to place the revisions affecting the cash-out mechanism into effect at the same time. Since no party protested these provisions of the Stipulation and Agreement, Southern submits that the Commission should grant it all waivers necessary to place these provisions into effect April 1, 1996.

Any person desiring to be heard or to protest this filing should file a motion to intervene or protest with the Federal Energy Regulatory Commission, Washington, D.C. 20426, in accordance with Rules 211 and 214 of the Commission's Rules of Practice and Procedures (18 CFR Sections 385.211 and 385.214). All such motions and protests must be filed as provided in Section 154.210 of the Commission's Regulations. Protests will be considered by the Commission in determining the appropriate action to be taken, but will not serve to make protestants parties to the proceeding. Any person wishing to become a party must file a motion to intervene. Copies of this filing are on file with the Commission and are available for public inspection in the Public Reference Room.

Lois D. Cashell,

Secretary.

[FR Doc. 96–7522 Filed 3–27–96; 8:45 am]

BILLING CODE 6717–01–M

[Docket No. RP95–197–000, et al.]

Transcontinental Gas Pipe Line Corp.; Notice of Informal Settlement Conference

March 22, 1996.

Take notice that an informal settlement conference will be convened in this proceeding on March 29, 1996, at 10:00 a.m. The conference will be held at the offices of the Federal Energy Regulatory Commission, 888 First Street NE., Washington, DC.

Any party, as defined by 18 CFR 385.102(c), or any participant, as defined in 18 CFR 385.102(b), may attend. Persons wishing to become a party must move to intervene and receive intervenor status pursuant to the Commission's regulations, 18 CFR 385.214.

For additional information, contact Donald Heydt at (202) 208–0740 or Michael Cotleur at (202) 208–1076.

Lois D. Cashell,

Secretary.

[FR Doc. 96–7523 Filed 3–27–96; 8:45 am]

BILLING CODE 6717–01–M

[Docket Nos. RP95–136–000 and RP93–109–000]

Williams Natural Gas Co.; Notice of Informal Settlement Conference

March 22, 1996.

Take notice that an informal settlement conference will be convened in the above-captioned proceedings at 10:00 a.m. on April 2, 1996, at the offices of the Federal Energy Regulatory Commission, 888 First Street NE., Washington, DC 20426, for the purpose of exploring the possible settlement of the above-referenced dockets.

Any party, as defined by 18 CFR 385.102(c), or any participant, as defined by 18 CFR 385.102(b), is invited to attend. Persons wishing to become a party must move to intervene and received intervenor status pursuant to the Commission's regulations (18 CFR 385.214).

For additional information, please contact Arnold H. Meltz at (202) 208–2161 or Donald. A. Heydt at (202) 208–0740.

Lois D. Cashell,

Secretary.

[FR Doc. 96–7524 Filed 3–27–96; 8:45 am]

BILLING CODE 6717–01–M

[Docket No. ER96–1323–000]

Wisconsin Electric Power Company; Notice of Filing

March 22, 1996.

Take notice that on March 15, 1996, Wisconsin Electric Power Company (Wisconsin Electric), tendered for filing an Electric Service Agreement and a Transmission Service Agreement between itself and Coastal Electric Services Company (Coastal). The Transmission Service Agreement allows Coastal to receive transmission service under Wisconsin Electric's FERC Point-to-Point Transmission Tariff, under Docket No. ER95–1474, Rate Schedule STNF.

Wisconsin Electric requests an effective date of March 30, 1996 and waiver of the Commission's notice requirements to allow for economic transactions. Copies of the filing have been served on Coastal, the Public Service Commission of Wisconsin and

the Michigan Public Service Commission.

Any person desiring to be heard or to protest said filing should file a motion to intervene or protest with the Federal Energy Regulatory Commission, 888 First Street, N.E., Washington, D.C. 20426, in accordance with Rules 211 and 214 of the Commission's Rules of Practice and Procedure (18 CFR 385.211 and 18 CFR 385.214). All such motions of protests should be filed on or before April 5, 1996. Protests will be considered by the Commission in determining the appropriate action to be taken, but will not serve to make protestants parties to the proceeding. Any person wishing to become a party must file a motion to intervene. Copies of this filing are on file with the Commission and are available for public inspection.

Lois D. Cashell,

Secretary.

[FR Doc. 96–7525 Filed 3–22–96; 8:45 am]

BILLING CODE 6717–01–M

[Docket No. ER96–1324–000]

Wisconsin Electric Power Company; Notice of Filing

March 22, 1996.

Take notice that on March 15, 1996, Wisconsin Electric Power Company (Wisconsin Electric), tendered for filing an Electric Service Agreement and a Transmission Service Agreement between itself and Valero Power Services Company (Valero). The Transmission Service Agreement allows Valero to receive transmission service under Wisconsin Electric's FERC Point-to-Point Transmission Tariff, under Docket No. ER95–1474, Rate Schedule STNF.

Wisconsin Electric requests an effective date of March 30, 1996 and waiver of the Commission's notice requirements to allow for economic transactions. Copies of the filing have been served on Valero, the Public Service Commission of Wisconsin and the Michigan Public Service Commission.

Any person desiring to be heard or to protest said filing should file a motion to intervene or protest with the Federal Energy Regulatory Commission, 888 First Street NE., Washington, D.C. 20426, in accordance with Rules 211 and 214 of the Commission's Rules of Practice and Procedure (18 CFR 385.211 and 18 CFR 385.214). All such motions or protests should be filed on or before April 5, 1996. Protests will be considered by the Commission in determining the appropriate action to be taken, but will not serve to make protestants parties to the proceeding. Any person wishing to become a party must file a motion to intervene. Copies of this filing are on file with the Commission and are available for public inspection.

Lois D. Cashell,

Secretary.

[FR Doc. 96–7526 Filed 3–27–96; 8:45 am]

BILLING CODE 6717–01–M

[Docket No. CP96–239–000, et al.]

Questar Pipeline Company, et al.; Natural Gas Certificate Filings

March 21, 1996.

Take notice that the following filings have been made with the Commission:

1. Questar Pipeline Company

[Docket No. CP96–239–000]

Take notice that on March 8, 1996, as supplemented on March 14, 1996 and March 18, 1996, Questar Pipeline Company (Questar), 79 South State Street, Salt Lake City, Utah 84111, filed in Docket No. CP96–239–000 a request pursuant to Sections 157.205 and 157.211 of the Commission's Regulations under the Natural Gas Act (18 CFR 157.205 and 157.211) for authorization to 1) construct and operate replacement delivery point metering and regulating facilities and 2) abandon the existing metering and regulating delivery point facilities. The subject delivery point, the Ogden Valley District Regulator Station (Ogden Valley DRS) formerly known as the Weber Basin District Regulator Station (Weber Basin DRS), is located adjacent to Questar's transmission pipeline system in Morgan County, Utah. Questar states that the replacement delivery point facilities will be utilized to provide expanded transportation service to Mountain Fuel Supply Company (Mountain Fuel), a local distribution company which is an affiliate of Questar, under the blanket certificate issued in Docket No. CP82–491–000, pursuant to Section 7(c) of the Natural Gas Act, all as more fully set forth in the request which is on file with the Commission and open to public inspection.

By letter dated February 6, 1996, Questar states that Mountain Fuel requested that additional facilities be installed to provide expanded transportation service. Questar states that the proposed facilities will allow Mountain Fuel to provide expanded service to meet the space-and-water heating requirements of the commercial and residential customers of Upper Ogden Valley area of Weber County, Utah. Specifically, Questar will install a four-inch meter run at an estimated cost of $15,000. Questar proposes to provide the expanded transportation service pursuant to its firm transportation Rate Schedule T–1. Questar notes that the additional deliveries to Mountain Fuel will not exceed the maximum daily quantities of 795,000 Dth/d nor will it cause detriment or disadvantage to its other customers. Questar proposes to initially deliver up to approximately 400 Dth per hour. Questar notes that Mountain Fuel expects its peak-day and annual requirements at the new delivery point to approximate 8,000 Dth/d and 750,000 Dth per year.

The facilities that Questar proposes to abandon have been historically utilized as a transportation delivery point, formerly known as Weber Basin DRS, pursuant to Questar's firm transportation Rate Schedules T–1 and NNT. Specifically, Questar proposes to abandon approximately 100 feet of two, three and four-inch diameter piping, one two-inch meter run and one pressure regulating valve assembly at an estimated cost of $15,000. Weber Basin DRS was originally constructed in 1965 to serve as a delivery point at a cost of $796. As part of its corporate reorganization in Docket Nos. CP80–274, *et al.*, the Commission authorized the transfer of the Weber Basin DRS and other jurisdictional transmission facilities to Questar as interstate facilities subject to the Commission's jurisdiction under the NGA.

Comment date: May 6, 1996, in accordance with Standard Paragraph G at the end of this notice.

2. NorAm Gas Transmission Company

[Docket No. CP96–251–000]

Take notice that on March 15, 1996, NorAm Gas Transmission Company (NGT), 1600 Smith Street, Houston, Texas 77002, filed in Docket No. CP96–251–000 a request pursuant to Sections 157.205 and 157.211 of the Commission's Regulations under the Natural Gas Act (18 CFR 157.205, 157.211) for authorization to construct and operate certain facilities in Columbia County, Arkansas under NGT's blanket certificate issued in Docket No. CP82–384–000, *et al.*, pursuant to Section 7 of the Natural Gas Act, all as more fully set forth in the request that is on file with the Commission and open to public inspection.

NGT proposes to to construct and operate a 2-inch tap and 1-inch first-cut

regulator for the transportation of gas to Petro Chem Operating Co. (Petro Chem). The estimated annual volume to be delivered is 43,800 MMBtu and 120 MMBtu per day. The estimated cost of construction is $81,286.36, which will be reimbursed by Petro Chem.

Comment date: May 6, 1996, in accordance with Standard Paragraph G at the end of this notice.

3. Northwest Pipeline Corporation

[Docket No. CP96–257–000]

Take notice that on March 18, 1996, Northwest Pipeline Corporation (Northwest), 295 Chipeta Way, Salt Lake City, Utah 84158, filed in Docket No. CP96–257–000 an application pursuant to Sections 7(c) and 7(b) of the Natural Gas Act for authorization to construct and operate certain replacement natural gas facilities and for authorization to abandon and remove the facilities being replaced, all as more fully set forth in the application on file with the Commission and open to public inspection.

Northwest proposes to construct and operate approximately one mile of new 26-inch replacement pipeline, partially outside of Northwest's existing right-of-way, and abandon and remove approximately one mile of existing deteriorated pipeline on Northwest's Ignacio to Sumas mainline near the town of Rangely in Rio Blanco County, Colorado.

Northwest states that the installation of replacement pipeline and the removal and abandonment of the existing line is necessary to insure the integrity of its mainline transmission system.

Northwest states that the proposed pipeline replacement will not result in an increase in the capacity of its mainline.

Northwest estimates the total costs to construct the proposed pipeline and remove and abandon the existing pipeline segment at approximately $882,500.

Comment date: April 11, 1996, in accordance with Standard Paragraph F at the end of this notice.

4. Williams Natural Gas Company

[Docket No. CP96–259–000]

Take notice that on March 18, 1996, Williams Natural Gas Company (WNG), P.O. Box 3288, Tulsa, Oklahoma 74101, filed in Docket No. CP96–259–000 a request pursuant to Sections 157.205 and 157.216 of the Commission's Regulations under the Natural Gas Act (18 CFR 157.205, 157.216) for authorization to abandon facilities in Shawnee County, Kansas under WNG's blanket certificate issued in Docket No. CP82–479–000 pursuant to Section 7 of the Natural Gas Act, all as more fully set forth in the request that is on file with the Commission and open to public inspection.

WNG proposes to abandon by sale to KPL, a Western Resources Company (KPL) approximately 8.25 miles of the Forbes 8-inch pipeline, measuring, regulating, and appurtenant facilities.

Comment date: May 6, 1996, in accordance with Standard Paragraph G at the end of this notice.

Standard Paragraphs

F. Any person desiring to be heard or make any protest with reference to said filing should on or before the comment date file with the Federal Energy Regulatory Commission, 888 First Street, N.E., Washington, D.C. 20426, a motion to intervene or a protest in accordance with the requirements of the Commission's Rules of Practice and Procedure (18 CFR 385.211 and 385.214) and the Regulations under the Natural Gas Act (18 CFR 157.10). All protests filed with the Commission will be considered by it in determining the appropriate action to be taken but will not serve to make the protestants parties to the proceeding. Any person wishing to become a party to a proceeding or to participate as a party in any hearing therein must file a motion to intervene in accordance with the Commission's Rules.

Take further notice that, pursuant to the authority contained in and subject to jurisdiction conferred upon the Federal Energy Regulatory Commission by Sections 7 and 15 of the Natural Gas Act and the Commission's Rules of Practice and Procedure, a hearing will be held without further notice before the Commission or its designee on this filing if no motion to intervene is filed within the time required herein, if the Commission on its own review of the matter finds that a grant of the certificate is required by the public convenience and necessity. If a motion for leave to intervene is timely filed, or if the Commission on its own motion believes that a formal hearing is required, further notice of such hearing will be duly given.

Under the procedure herein provided for, unless otherwise advised, it will be unnecessary for the applicant to appear or be represented at the hearing.

G. Any person or the Commission's staff may, within 45 days after the issuance of the instant notice by the Commission, file pursuant to Rule 214 of the Commission's Procedural Rules (18 CFR 385.214) a motion to intervene or notice of intervention and pursuant to Section 157.205 of the Regulations under the Natural Gas Act (18 CFR 157.205) a protest to the request. If no protest is filed within the time allowed therefore, the proposed activity shall be deemed to be authorized effective the day after the time allowed for filing a protest. If a protest is filed and not withdrawn within 30 days after the time allowed for filing a protest, the instant request shall be treated as an application for authorization pursuant to Section 7 of the Natural Gas Act.

Lois D. Cashell,

Secretary.

[FR Doc. 96–7519 Filed 3–27–96; 8:45 am]

BILLING CODE 6717–01–P

[Docket No. RM96–7–000]

Regulation of Negotiated Transportation Services of Natural Gas Pipelines; Notice of Extension of Time

March 22, 1996.

On March 19, 1996, United Distribution Companies, Associated Gas Distributor, The LDC Caucus and American Gas Association (collectively Petitioners) and Interstate Natural Gas Association of America (INGAA) filed respective motions for an extension of time within which to submit initial comments in response to the Commission's Statement of Policy and Request for Comments issued January 31, 1996, in the above-docketed proceeding (61 FR 4633, February 7, 1996). In their motions, Petitioners and INGAA state that additional time for the filing deadline will provide all parties more time to analyze the legal and policy implications of the rulemaking proceeding and give the parties the time needed to develop, if possible, consensus positions. On March 21, 1996, the Independent Petroleum Association of America filed an answer in support of the extension request stating that additional time will allow the gas industry to consider the complex issues fully.

Upon consideration, notice is hereby given that an extension of time for the filing of initial comments is granted to and including May 31, 1996.

Lois D. Cashell,

Secretary.

[FR Doc. 96–7566 Filed 3–27–96; 8:45 am]

BILLING CODE 6717–01–M

ENVIRONMENTAL PROTECTION AGENCY

[FRL–5448–1]

Proposed Settlements; Accidental Release Prevention List of Substances Litigation

AGENCY: Enviornmental Protection Agency (EPA).

ACTION: Notice of proposed settlements; request for public comment.

SUMMARY: In accordance with section 113(g) of the Clean Air Act (''Act''), notice is hereby given of proposed settlements in the following cases: *American Petroleum Institute* v. *U.S. Environmental Protection Agency,* No. 94–1273 (D.C. Cir.), and *Institute of Makers of Explosives* v. *U.S. Environmental Protection Agency,* No. 94–1276 (D.C. Cir.).

These cases involve challenges to the final rule, entitled ''List of Regulated Substances and Thresholds for Accidental Release Prevention; Requirements for Petitions Under Section 112(r) of the Clean Air Act as Amended,'' which, *inter alia,* established a list of substances to be subject to regulation under the accident prevention provisions of the Act and threshold quantities for such substances. 59 Fed. Reg. 4478 (Jan. 31, 1994). Under the terms of the proposed settlements, the Environmental Protection Agency (EPA) would conduct a rulemaking concerning amendment of the above-mentioned final rule to delist certain chemicals and to modify certain other provisions.

For a period of thirty (30) days following the date of publication of this notice, EPA will receive written comments relating to the settlements from persons who were not named as parties to the litigation in question. The Agency or the Department of Justice may withhold or withdraw consent to the proposed settlements if the comments disclose facts or circumstances that indicate that such consent is inappropriate, improper, inadequate, or inconsistent with the requirements of the Act. Copies of the settlements are available from Samantha Hooks, Air and Radiation Division (2344), Office of General Counsel, U.S. Environmental Protection Agency, 401 M Street, SW., Washington, DC 20460, (202) 260–7606. Written comments should be sent to Jon Averback at the above address and must be submitted on or before April 29, 1996.

Dated: March 21, 1996.

Scott C. Fulton,

Acting, General Counsel.

[FR Doc. 96–7599 Filed 3–27–96; 8:45 am]

BILLING CODE 6560–50–M

[FRL–5448–3]

Proposed Settlement Agreement, Clean Air Act Citizen Suit

AGENCY: Environmental Protection Agency.

ACTION: Notice of proposed settlement; request for public comment.

SUMMARY: In accordance with section 113(g) of the Clean Air Act, as amended, (''Act''), notice is hereby given of a proposed partial consent order, which was lodged with the United States District Court for the District of Columbia by the United States Environmental Protection Agency (''EPA'') on November 29, 1995, in a lawsuit filed by the Sierra Club Legal Defense Fund. This lawsuit, which was filed pursuant to section 304(a) of the Act, 42 U.S.C. 7604(a), concerns, among other things, EPA's alleged failure to meet mandatory deadlines under section 112 (d), (e), and (n)(1)(B) of the Clean Air Act.

Since the time that the initial proposed consent order was lodged with the Court, the EPA was shut-down for three weeks due to a lack of appropriated funds. For this and other reasons, EPA and Sierra Club have agreed to reassess the feasibility of the dates in the proposed order.

After providing notice to plaintiff, EPA did not submit the mercury study to Congress pursuant to section 112(n)(1)(B) of the CAA, in accordance with the date in the proposed order. The parties have agreed that such study shall be submitted by April 15, 1996. The revised date will be included in a new proposed consent order that will be lodged with the Court.

With respect to the dates for issuing the maximum achievable control technology (MACT) standards, as established in paragraph 2 of the proposed order, the parties have agreed to revise the dates to provide two additional months for issuance of the standards. The parties plan to lodge an amended proposed order with the Court, which will revise the list in paragraph 2 as follows:

Source category	Date
Acrylonitrile-Butadiene-Styrene Production.	5/15/96
Butyl Rubber Production	7/15/96
Epichlorohydrin Elastomers Production.	7/15/96
Ethylene-Propylene Rubber Production.	7/15/96
Hypalon (TM) Production	7/15/96
Methyl Methacrylate-Acrylonitrile-Butadiene-Styrene Production.	5/15/96
Neoprene Production	7/15/96
Nitrile Butadiene Rubber Production	7/15/96
Polybutadiene Rubber Production	7/15/96
Polystyrene Production	5/15/96
Polysulfide Rubber Production	7/15/96
Styrene-Butadiene Rubber and Latex Production.	7/15/96

The parties plan to file the amended proposed consent order with the Court shortly. The new order will incorporate the revisions described above concerning the submission of the mercury study to Congress and the issuance of twelve MACT standards under section 112(d) of the CAA. Because today's notice provides the schedules that will be incorporated into the revised order, it will not matter if this notice is published before the new consent order is filed with the Court, because this notice will provide adequate notice under section 113(g) of the CAA with respect to the new dates for the mercury study and the twelve MACT categories.

For a period of thirty (30) days following the date of publication of this notice, the Agency will receive written comments relating to the proposed partial consent order, as modified by this notice, from persons who were not named as parties to the litigation in question. EPA or the Department of Justice may withhold or withdraw consent to the proposed partial consent order if the comments disclose facts or circumstances that indicate that such consent is inappropriate, improper, inadequate, or inconsistent with the requirements of the Act. Unless EPA or the Department of Justice determines, following the comment period, that consent is inappropriate, the final consent order will establish deadlines for the regulations covered by § 112(d) and the study provided for by § 112(n)(1)(B).

A copy of the proposed consent order was lodged with the Clerk of the United States District Court for the District of Columbia on November 29, 1995. The dates in that draft consent order will be modified to reflect the date identified in this notice. A revised consent order will be lodged with the Court shortly. Copies of the current November 29, 1995 draft consent order are also available from Sonja Lee, Air and Radiation Division (2344), Office of General Counsel, U.S. Environmental Protection Agency, 401

M Street, S.W., Washington, D.C. 20460, (703) 235–5330. A copy of the revised consent order will be available from Ms. Lee once such draft is filed with the Court. Written comments should be sent to Jan M. Tierney at the address above and must be submitted on or before April 29, 1996.

Dated: March 4, 1996.

Jonathan Z. Cannon,

General Counsel.

[FR Doc. 96–7605 Filed 3–22–96; 8:45 am]

BILLING CODE 6560–50–M

[FRL–5448–5]

National Advisory Council for Environmental Policy and Technology; Public Meeting

AGENCY: Environmental Protection Agency (EPA).

ACTION: Notice of public meeting.

SUMMARY: Under the Federal Advisory Committee Act, PL 92463, EPA gives notice of a two-day meeting of the National Advisory Council for Environmental Policy and Technology (NACEPT). NACEPT provides advice and recommendations to the Administrator of EPA on a broad range of environmental policy issues. This meeting is being held to discuss recommendations that the Committee plans to transmit to EPA regarding Community Based Environmental Protection programs and policies. The Committee will also discuss potential new projects for the coming year.

DATES: The two-day public meeting will be held on Wednesday, April 17, 1996 from 9:00 a.m. to 5:00 p.m. and on Thursday, April 18, 1996 from 8:30 am to 4:00 p.m.

ADDRESSES: On both days, the meeting will be held at the Residence Inn by Marriott, 550 Army Navy Drive, Pentagon City, Arlington, VA 22202.

Material may be transmitted to the Committee through Gordon Schisler, Designated Federal Official, NACEPT, U.S. EPA, Acting Director of the Office of Cooperative Environmental Management (1601), 401 M Street, S.W., Washington, D.C. 20460.

FOR FURTHER INFORMATION CONTACT: Joseph Sierra, Designated Federal Official for Community Based Environmental Protection Committee at 202–260–6839.

Dated: March 20, 1996.

Gordon Schisler,

Designated Federal Official.

[FR Doc. 96–7607 Filed 3–27–96; 8:45 am]

BILLING CODE 6560–50–P

[FRL–5448–2]

Mobile Sources Technical Advisory Committee Meeting

The Mobile Sources Technical Advisory Sub-Committee will meet on April 18, 1996, at the Best Western, Old Colony Inn, 615 First Street, Alexandria, VA 22314, from 9:30 a.m.–4:00 p.m. This meeting will review Sub-Committee progress in the areas previously established as a priority for the Sub-Committee, including in-use deterioration and modeling.

Susan Creel,

Acting Associate Director for Policy Budget and Planning.

[FR Doc. 96–7601 Filed 3–27–96; 8:45 am]

BILLING CODE 6560–50–M

FEDERAL DEPOSIT INSURANCE CORPORATION

Coastal Barrier Improvement Act; Property Availability: Bryant Road Property, Worcester County, MA

AGENCY: Federal Deposit Insurance Corporation.

ACTION: Notice.

SUMMARY: Notice is hereby given that the property known as the Bryant Road Property located on the southerly side of Bryant Road in the Town of Holden, Worcester County, Massachusetts, is affected by section 10 of the Coastal Barrier Improvement Act of 1990, as specified below.

DATES: Written notice of serious interest to purchase or effect other transfer of all or any portion of the property may be mailed or faxed to the FDIC until June 26, 1996.

ADDRESSES: Copies of detailed descriptions of the property, including maps, may be obtained from or are available for inspection by contacting the following person: Ms. Mary Ann Richardson, Federal Deposit Insurance Corporation, Franklin Consolidated Office, 124 Grove Street, Franklin, MA 02038, (508) 520–6186; Fax (508) 520–2688.

SUPPLEMENTARY INFORMATION: The Bryant Road property consists of approximately 155 acres of undeveloped land located on the southerly side of Bryant Road approximately 250 feet south of the intersection with Broad Street (Route 68) in the Town of Holden, Massachusetts. The legal description of the property is shown at the Worcester District Registry of Deeds in Book 16693, Pages 329–330 and is further defined in the Holden Assessor's Office as Map 85, Parcel L–3. The site is irregularly shaped, forested, and zoned residential. The property exhibits an uneven, rolling topography with an overall slope dropping to the south. The Bryant Road property has vegetation predominately composed of mixed deciduous and coniferous trees and has two seasonal streams and a pond. The property contains wetlands and is contiguous with lands managed by the Commonwealth of Massachusetts Metropolitan District Commission and the City of Worcester for watershed and natural resource conservation purposes. This property is covered property within the meaning of Section 10 of the Coastal Barrier Improvement Act of 1990, Public Law 101–591 (12 U.S.C. 1441a–3).

Written notice of serious interest in the purchase or other transfer of all or any portion of the property must be received on or before [insert date 90 days after Federal Register publication date] by the FDIC at the appropriate address stated above.

Eligible Entities

Those entities eligible to submit written notices of serious interest are:

1. Agencies or entities of the Federal government;
2. Agencies or entities of State or local government; and
3. ''Qualified organizations'' pursuant to section 170(h)(3) of the Internal Revenue Code of 1986 (26 U.S.C. 170(h)(3)).

Form of Notice

Written notices of serious interest must be submitted in the following form:

NOTICE OF SERIOUS INTEREST

RE: [insert name of property]
Federal Register Publication Date:_____

[insert Federal Register publication date]

1. Entity name.

2. Declaration of eligibility to submit Notice under criteria set forth in the Coastal Barrier Improvement Act of 1990, P.L. 101–591, section 10(b)(2), (12 U.S.C. 1441a–3(b)(2)), including, for qualified organizations, a determination letter from the United States Internal Revenue Service regarding the organization's status under section 170(h)(3) of the U.S. Internal Revenue Code (26 U.S.C. 170(h)(3)).

3. Brief description of proposed terms of purchase or other offer for all or any portion of the property (e.g., price, method of financing, expected closing date, etc.).

4. Declaration of entity that it intends to use the property for wildlife refuge,

sanctuary, open space, recreational, historical, cultural, or natural resource conservation purposes (12 U.S.C. 1441a–3(b)(4)), as provided in a clear written description of the purpose(s) to which the property will be put and the location and acreage of the area covered by each purpose(s) including a declaration of entity that it will accept the placement, by the FDIC, of an easement or deed restriction on the property consistent with its intended conservation use(s) as stated in its notice of serious interest.

5. Authorized Representative (Name/Address/Telephone/Fax).

List of Subjects

Environmental protection.

Dated: March 21, 1996.

Federal Deposit Insurance Corporation.

Jerry L. Langley,

Executive Secretary.

[FR Doc. 96–7486 Filed 3–27–96; 8:45 am]

BILLING CODE 6714–01–M

Coastal Barrier Improvement Act; Property Availability: Malden Street Property, Worcester County, Massachusetts

AGENCY: Federal Deposit Insurance Corporation.

ACTION: Notice.

SUMMARY: Notice is hereby given that the property known as the Malden Street Property located off Malden Street in the Town of West Boylston, Worcester County, Massachusetts, is affected by section 10 of the Coastal Barrier Improvement Act of 1990, as specified below.

DATES: Written notice of serious interest to purchase or effect other transfer of all or any portion of the property may be mailed or faxed to the FDIC until June 26, 1996.

ADDRESSES: Copies of detailed descriptions of the property, including maps, may be obtained from or are available for inspection by contacting the following person: Ms. Mary Ann Richardson, Federal Deposit Insurance Corporation, Franklin Consolidated Office, 124 Grove Street, Franklin, MA 02038, (508) 520–6186; Fax (508) 520–2688.

SUPPLEMENTARY INFORMATION: The Malden Street property consists of approximately 125 acres of undeveloped land with 50 feet of frontage on Malden Street, in the Town of West Boylston, Massachusetts, and a portion of the property is located in the Town of Holden, Massachusetts. The legal description of the property is shown at the Worcester District Registry of Deeds in Book 16653, Page 206 and further defined in a recorded plan identified in the West Boylston Assessor's Office as Map 135, Parcels 1, 2, 4, & 5, and Map 136, Parcels 13–33, and in the Holden Assessor's Office as Map 93, Parcels 1 & 3. The property is irregular in shape, wooded, and contains a substantial amount of rock ledge associated with surface boulders and soil types that exhibit a high water table and slow percolation rates. The Malden Street property has recreational value and is contiguous with lands managed by the Commonwealth of Massachusetts Metropolitan District Commission for watershed and natural resource conservation purposes. This property is covered property within the meaning of Section 10 of the Coastal Barrier Improvement Act of 1990, P.L. 101–591 (12 U.S.C. 1441a–3).

Written notice of serious interest in the purchase or other transfer of all or any portion of the property must be received on or before June 26, 1996; by the FDIC at the appropriate address stated above.

Eligible Entities

Those entities eligible to submit written notices of serious interest are:

1. Agencies or entities of the Federal government;

2. Agencies or entities of State or local government; and

3. ''Qualified organizations'' pursuant to section 170(h)(3) of the Internal Revenue Code of 1986 (26 U.S.C. 170(h)(3)).

Form of Notice

Written notices of serious interest must be submitted in the following form:

NOTICE OF SERIOUS INTEREST

RE: [insert name of property]
Federal Register Publication
Date: _____

[insert Federal Register publication date]

1. Entity name.

2. Declaration of eligibility to submit Notice under criteria set forth in the Coastal Barrier Improvement Act of 1990, P.L. 101–591, section 10(b)(2), (12 U.S.C. 1441a–3(b)(2)), including, for qualified organizations, a determination letter from the United States Internal Revenue Service regarding the organization's status under section 170(h)(3) of the U.S. Internal Revenue Code (26 U.S.C. 170(h)(3)).

3. Brief description of proposed terms of purchase or other offer for all or any portion of the property (e.g., price, method of financing, expected closing date, etc.).

4. Declaration of entity that it intends to use the property for wildlife refuge, sanctuary, open space, recreational, historical, cultural, or natural resource conservation purposes (12 U.S.C. 1441a–3(b)(4)), as provided in a clear written description of the purpose(s) to which the property will be put and the location and acreage of the area covered by each purpose(s) including a declaration of entity that it will accept the placement, by the FDIC, of an easement or deed restriction on the property consistent with its intended conservation use(s) as stated in its notice of serious interest.

5. Authorized Representative (Name/Address/Telephone/Fax).

List of Subjects

Environmental protection.

Dated: March 21, 1996.

Federal Deposit Insurance Corporation.

Jerry L. Langley,

Executive Secretary.

[FR Doc. 96–7487 Filed 3–27–96; 8:45 am]

BILLING CODE 6714–01–M

FEDERAL EMERGENCY MANAGEMENT AGENCY

[FEMA–3117–EM]

Texas; Amendment to Notice of an Emergency Declaration

AGENCY: Federal Emergency Management Agency (FEMA).

ACTION: Notice.

SUMMARY: This notice amends the notice of an emergency for the State of Texas, (FEMA–3117–EM), dated February 23, 1996, and related determinations.

EFFECTIVE DATE: March 18, 1996.

FOR FURTHER INFORMATION CONTACT: Pauline C. Campbell, Response and Recovery Directorate, Federal Emergency Management Agency, Washington, DC 20472, (202) 646–3606.

SUPPLEMENTARY INFORMATION: The notice of an emergency for the State of Texas, is hereby amended to include the following area among those areas determined to have been adversely affected by the catastrophe declared an emergency by the President in his declaration of February 23, 1996:

Cottle County for emergency assistance as defined in this declaration.

(Catalog of Federal Domestic Assistance No. 83.516, Disaster Assistance)

William C. Tidball,

Associate Director, Response and Recovery Directorate.

[FR Doc. 96–7585 Filed 3–27–96; 8:45 am]

BILLING CODE 6718–02–P

FEDERAL MARITIME COMMISSION

Ocean Freight Forwarder License Applicants

Notice is hereby given that the following applicants have filed with the Federal Maritime Commission applications for licenses as ocean freight forwarders pursuant to section 19 of the Shipping Act of 1984 (46 U.S.C. app. 1718 and 46 CFR 510).

Persons knowing of any reason why any of the following applicants should not receive a license are requested to contact the Office of Freight Forwarders, Federal Maritime Commission, Washington, DC 20573.

Deborah S. Whitte, 975 Morrison Drive, Bldg., C-Suite A, Charleston, SC 29403, Sole Proprietor

Pee Jay International Shipping Worldwide Freight Forwarders, 777 So. S.R.L. Thornton FWY #204 Box 3, Dallas, TX 75203, Jonathan Owens Daniels, Peter Mozle, Partnership

Cargo Services, Inc., 5760 Dividend Drive, Indianapolis, IN 46241, Officers: Steve Fugate, President, William Batton, Vice President

Arriage & Associates, Inc., 7211 North Loop East, Houston, TX 77028, Officers: Pandora Daugherty, President; Darryl William Cullick, Vice President.

Dated: March 22, 1996.

Joseph C. Polking,

Secretary.

[FR Doc. 96–7514 Filed 3–27–96; 8:45 am]

BILLING CODE 6730–01–M

DEPARTMENT OF HEALTH AND HUMAN SERVICES

Health Resources and Services Administration

Availability of Funds for the National Health Service Corps Loan Repayment Program and Grants for State Loan Repayment Programs

AGENCY: Health Resources and Services Administration, PHS.

ACTION: Notice.

SUMMARY: The Health Resources and Services Administration (HRSA) announces that applications will be accepted for fiscal year (FY) 1996 for: 1) awards for educational loan repayment under the National Health Service Corps (NHSC) Loan Repayment Program (LRP) (Section 338B of the Public Health Service (PHS) Act) and 2) grants to States to operate loan repayment programs (Section 338I of the PHS Act).

This program announcement is subject to the final action on the appropriation of funds. At this time, given the continuing resolutions and the absence of a final FY 1996 appropriation for these programs, the specific amount available is not known.

The HRSA, through this notice, invites health professionals to apply for participation in the NHSC LRP and invites States to apply for grants to operate State Loan Repayment Programs (LRPs). Awards will be made for a 1-year budget period and for up to a 5-year project period.

The PHS is committed to achieving the health promotion and disease prevention objectives of *Healthy People 2000*, a PHS-led national activity for setting health priority areas. These programs will contribute to the *Healthy People 2000* objectives by improving access to primary health care services through coordinated systems of care for medically underserved populations in both rural and urban areas. Potential applicants may obtain a copy of *Healthy People 2000* (Full Report, Stock No. 017–001–00474–01) or *Healthy People 2000* (Summary Report; Stock No. 017–001–00473–1) through the Superintendent of Documents, Government Printing Office, Washington, D.C. 20402–9325 (telephone 202–783–3238).

PHS strongly encourages all grant recipients to provide a smoke-free workplace and promote the non-use of all tobacco products. In addition, Public Law 103–227, the Pro-Children Act of 1994, prohibits smoking in certain facilities (or in some cases, any portion of a facility) in which regular or routine education, library, day care, health care or early childhood development services are provided to children.

Part A of this notice contains specific information concerning the NHSC LRP, and Part B contains specific information concerning grants for State LRPs.

Part A—NHSC Loan Repayment Program

ADDRESSES: Application materials may be obtained by calling or writing to: National Health Service Corps Loan Repayment Program, 2070 Chain Bridge Road, Suite 450, Vienna, Virginia 22182–2536, 1–800–221–9393 or (703) 734–6855. Completed applications must be returned to: Loan Repayment Programs Branch, Division of Scholarships and Loan Repayments, Bureau of Primary Health Care, HRSA, 4350 East-West Highway, 10th Floor, Bethesda, Maryland 20814, (301) 594–4400. The 24-hour toll-free phone number is 1–800–435–6464, and the FAX number is 301–594–4981. Applicants for the NHSC LRP will use HRSA Form 873 approved under Office of Management and Budget (OMB) Number 0915–0127.

DATES: The deadline for applications is April 30, 1996, or until all appropriated funds have been obligated, whichever occurs first. Due to limited funding, it is anticipated that all appropriated funds will be obligated prior to April 30, 1996. The volume of applications is historically three times greater than the number of contracts that can be awarded, therefore, to receive consideration for funding, health professionals must submit an application and proof of a job offer at an eligible NHSC LRP Service Site.

Applications will be considered to be on time if they are either: (1) received on or before the deadline date; or (2) postmarked on or before the established deadline date and received in time for orderly processing. Applicants should request a legibly dated U.S. Postal Service postmark or obtain a legibly dated receipt from a commercial carrier or U.S. Postal Service. Private metered postmarks are not acceptable as proof of timely mailing. Applications received after the announced closing date will not be considered for funding.

FOR FURTHER INFORMATION CONTACT: For further program information and technical assistance, please contact Sharley L. Chen, Chief, Loan Repayment Programs Branch, HRSA/BPHC/DSLR, at the above address, phone or FAX number.

SUPPLEMENTARY INFORMATION: Section 338B of the PHS Act (42 U.S.C. 254l-1) authorizes the Secretary to establish the NHSC LRP to help in assuring, with respect to the provision of primary health services, an adequate supply of trained primary care health professionals for the NHSC. The NHSC is used by the Secretary to provide primary health services in federally designated health professional shortage areas (HPSAs). Primary health services are services regarding family medicine, general internal medicine, general pediatrics, obstetrics and gynecology, dentistry, or mental health, that are provided by physicians or other health professionals.

Under the NHSC LRP, the Secretary will repay graduate and undergraduate educational loans incurred by primary care health professionals. For the first 2 years of full-time service at an approved site in a federally designated HPSA, the Secretary will repay up to $25,000 per year of the educational loans of such individual. (There is a minimum 2-year service obligation.) For subsequent years of full-time service, if the NHSC LRP contract is extended, the Secretary will repay up to $35,000 per year. Payments may be made to participants on an advanced quarterly basis (one quarter in

advance of service for the entire service obligation), on an advanced annual basis (one year in advance of service for each year of service) or on an advanced biennial basis (2 years in advance of service but only for the first 2 years of a contract). The Secretary shall, in addition to such payments, make payments to the individual in an amount equal to 39 percent of the total amount of loan repayments made for the taxable year involved. In addition to these amounts, NHSC LRP participants will receive a salary from a private or public entity or, in some cases, the Federal Government during the term of their service.

The Secretary will identify and make available annually a list of those HPSA sites which will be available for service repayment under the NHSC LRP. The Secretary will select applicants for consideration for participation in the NHSC LRP according to the following criteria:

(1) The extent to which an individual's training in a health profession or specialty is determined by the Secretary to be needed by the NHSC in providing primary health services. From time to time, the Secretary will publish a notice detailing the professions and specialties most needed by the NHSC. Current professional and specialty priorities are outlined in this notice at the end of Part A.

(2) The extent to which an individual is determined by the Secretary to be committed to serve in a HPSA.

(3) The extent of an individual's demonstrated interest in providing primary health services.

(4) The immediacy of an individual's availability for service. Individuals who have a degree, have completed all necessary postgraduate training in their professions and specialties (i.e., in the case of physicians, are certified or eligible to sit for the certifying examinations of a specialty board, and in the case of other health professions, are certified in their specialty), and have a current and unrestricted license to practice their profession in the State in which they intend to serve, will receive highest consideration.

(5) The academic standing, prior professional experience in a HPSA, board certification, residency achievements, peer recommendations, and other criteria related to professional competence or conduct will also be considered.

In providing contracts under the NHSC LRP, priority will be given to an applicant:

- Whose health profession or specialty is most needed by the NHSC;
- Who has and whose spouse, if any, has characteristics that increase the probability of continuing to serve in a HPSA upon completion of his or her service obligation;
- Who is from a disadvantaged background, subject to the preceding paragraph.

Eligible Participants

To be eligible to participate in the NHSC LRP, an individual must:

(1)(a) Have a degree in allopathic or osteopathic medicine, dentistry, or other health profession, or be certified, or in accordance with State licensure requirements, as a nurse midwife, nurse practitioner, or physician assistant. Other health professions include clinical psychology, clinical social work, and dental hygiene;

(b) Be enrolled in an approved graduate training program in allopathic or osteopathic medicine, dentistry, or other health profession; or

(c) Be enrolled as a full-time student at an accredited school in a State and in the final year of a course of study or program leading to a degree in allopathic or osteopathic medicine, dentistry, or other health profession.

(2) Be eligible for appointment as a commissioned officer in the Regular or Reserve Corps of the PHS or be eligible for selection for civilian service in the NHSC (e.g., must be a citizen or national of the United States); and

(3) Submit an application for a contract to participate in the NHSC LRP which contract describes the repayment of educational loans in return for the individual serving for an obligated period.

Any individual who previously incurred an obligation for health professional service to the Federal Government, a State Government, or other entity is ineligible to participate in the NHSC LRP unless such obligation is completely satisfied prior to the beginning of service under this Program. Any individual who has breached an obligation for health professional service to the Federal Government, a State Government or other entity is ineligible to participate in the NHSC LRP. Any individual who has a judgment lien against his or her property for a debt to the United States is ineligible to participate in the NHSC LRP until the judgment is paid in full or otherwise satisfied.

No loan repayments will be made for any professional practice performed prior to the effective date of the NHSC LRP contract. All individuals must have a current and unrestricted license to practice their profession in the State of practice prior to beginning service under this Program.

Professions and Specialties Needed by the NHSC

At this time, the Secretary has determined, based on community demand, that priority will be given to: physicians (M.D.s and D.O.s) who are certified or eligible to sit for the certifying examination in the specialty boards of family practice, obstetrics/gynecology, internal medicine, and pediatrics.

Other Award Information

This program is not subject to the provisions of Executive Order 12372, Intergovernmental Review of Federal Programs, since Executive Order 12372 does not cover payments to individuals. In addition, this program is not subject to the Public Health System Reporting Requirements, since the requirements do not cover payment to individuals.

The OMB *Catalog of Federal Domestic Assistance* number for this program is 93.162.

Part B—Grants for State Loan Repayment Programs

ADDRESSES: Application materials for State Loan Repayment Programs may be obtained from: Grants Management Officer, HRSA/BPHC/GMB, 4350 East-West Highway, Room 11–1C3, Bethesda, Maryland 20814, (301) 594–4260, FAX (301) 594–4073. Completed new and competing applications must be returned to: Bureau of Primary Health Care, Grants Management Officer, c/o Houston Associates, Inc., 1010 Wayne Avenue, Suite 240, Silver Spring, Maryland 20910. Completed applications for budget period renewals (i.e., non-competing continuations) must be returned to: Grants Management Officer, HRSA/BPHC/GMB, 4350 East-West Highway, Room 11–1C3, Bethesda, Maryland 20814, (301) 594–4260 and FAX (301) 594–4073. The Grants Management staff is available to provide assistance on business management issues.

Application for these grants will be made on PHS Form 5161–1 (revised in July 1992) with revised face sheet DHHS Form 424, as approved by the OMB under control number 0937–0189. Specific instructions for completing the application form for this program will be sent to any State requesting an application package.

DATES: Applications are due May 1, 1996. Applications will be considered to have met the deadline if they are: (1) received on or before the deadline date; or (2) postmarked on or before the deadline date and received in time for

orderly processing. Applicants should request a legibly dated U.S. Postal Service postmark or obtain a legibly dated receipt from a commercial carrier or the U.S. Postal Service. Private metered postmarks will not be accepted as proof of timely mailing. Late applications will not be considered for funding and will be returned to the applicant.

FOR FURTHER INFORMATION CONTACT: For general program information and technical assistance, please contact Sharley L. Chen, Chief, Loan Repayment Programs Branch, HRSA/BPHC/DSLR, 4350 East-West Highway, 10th Floor, Bethesda, Maryland 20814, (301) 594–4400. The 24-hour toll-free phone number is 1–800–435–6464, and the FAX number is (301) 594–4981.

SUPPLEMENTARY INFORMATION: Section 338I of the PHS Act (42 U.S.C. 254q–1) authorizes the Secretary, acting through the Administrator, HRSA, to make grants to States for the purpose of assisting the States in operating programs as described in this notice for the repayment of educational loans of health professionals in return for their practice in federally designated health professional shortage areas (HPSAs) to increase the availability of primary health services in federally designated HPSAs.

Eligibility Requirements

State Loan Repayment Programs (LRPs) eligible for funding under this announcement must meet the following requirements:

(1) Direct administration by a State agency;

(2) Payment of all or part of the qualifying educational loans (including principal, interest, and related educational loan expenses) of health professionals agreeing to provide primary health services in federally designated HPSAs. ''Qualifying educational loans'' are Government and commercial loans for actual costs paid for tuition, reasonable educational expenses, and reasonable living expenses relating to the graduate or undergraduate education of a health professional;

(3) Assignment of participating health professionals only to public and nonprofit private entities located in and providing primary health services in federally designated HPSAs; and

(4) Participant contracts which provide remedies for any breach of contract by participating health professionals.

Contract Requirements

Contracts provided by a State are not to be on terms that are more favorable to health professionals than the most favorable terms the Secretary is authorized to provide for contracts under the Federal NHSC Loan Repayment Program under Section 338B of the PHS Act, including terms regarding:

(1) The annual amount of payments provided on behalf of the professionals regarding educational loans; and

(2) The availability of remedies for any breach of the contracts by the health professionals involved.

States are required to develop contracts that reflect a minimum of 2 years of obligated full-time clinical service. The annual amount of payments under a contract may not exceed $35,000, unless (1) this excess amount is paid solely from non-Federal contributions, and (2) the contract provides that the health professional involved will satisfy the requirement of full-time clinical service under the contract solely through the provision of primary health services in a federally designated HPSA that is receiving priority for the purposes of section 333A(a)(1), and is authorized to receive assignments of individuals who are participating in the NHSC Scholarship Program.

No loan repayments will be made for any professional practice performed prior to the effective date of the health professional's State Loan Repayment Program contract, and no credit will be given for any practice done while the provider is in a professional school or graduate training program. Any individual who previously incurred an obligation for health professional service to the Federal Government, a State Government, or other entity is ineligible to participate in the State LRP unless such obligation will be completely satisfied prior to the beginning of service under this Program. Any individual who has breached an obligation for health professional service to the Federal Government, a State Government or other entity is ineligible to participate in the State LRP. Any individual who has a judgment lien against his or her property for a debt to the United States is ineligible to participate in the State LRP until the judgment is paid in full or otherwise satisfied.

Program Requirements

States seeking support under this notice for the cost of State LRPs must:

(1) Provide adequate assurance that, with respect to the costs of making loan repayments under contracts with health professionals, the State will make available (directly or through donations from public or private entities) non-Federal contributions in cash in an amount equal to not less than $1 for each $1 of Federal funds provided in the grant. The Federal grant funds and the State matching funds will be used only for loan repayments to health professionals who have entered into contracts with States. In determining the amount of non-Federal contributions in cash that a State has to provide, no other Federal funds may be used.

(2) Provide adequate assurance that the State will assign health professionals participating in the program only to public and nonprofit private entities located in and providing primary health services in federally designated HPSAs, and identify each site available for placement.

(3) Identify the State entity and key personnel who will administer the grant.

(4) Provide an assurance that, with respect to contracts between the State and the health professional, all contract breaches, by either party, will be reported regularly.

Future Support

The Secretary must determine that the State has complied with each of the agreements of the grant in order for funding to continue. Before making a grant for a subsequent year of State LRP support, the Secretary will, in the case of a State with one or more initial breaches by health professionals of the repayment contracts, reduce the amount of a grant to the State for the fiscal year involved. The grant will be reduced by an amount equal to the sum of the expenditures of Federal funds made regarding the State LRP contracts involved, including interest on the amount of such expenditures, determined on the basis of the maximum legal rate prevailing for loans made during the time amounts were paid under the contract, as determined by the Treasurer of the United States. The Secretary may waive the reduction in the subsequent grant award if the Secretary determines that a health professional's breach was attributable solely to the serious illness or death of that professional.

Evaluation Criteria

For new and competing continuation grants the following criteria will be used to evaluate State applications to determine which States are to be supported under this notice: (a) The extent of State's need for health professionals consistent with the health professions and specialties identified later in this notice; (b) the extent to which special consideration will be extended to federally designated HPSAs

with large minority populations; (c) the number and type of providers the State proposes to support through this program; (d) the appropriateness of the proposed placements of State LRP recipients (e.g., consistency and coordination with State-based plans to improve access to primary health services for the underserved communities and individuals); (e) the appropriateness of the qualifications, the administrative and managerial ability of the staff to implement the proposed project; (f) the suitability of the State's approach and the degree to which the plan of a State is coordinated with Federal, State, and other programs for meeting the State's health professional needs and resources, including mechanisms for ongoing evaluation of the program's activities; (g) the source and plans for the use of the State match (the degree to which the State match exceeds the minimum requirements or has increased over time, the amount of the match relative to the needs and resources of the State); and (h) the adequacy and appropriateness of the proposed budget.

For competing continuation applicants only, the following criteria will be used: (a) the grantee's progress in achieving stated goals and objectives for the previous year's grant including the impact the State LRP placements have had on the State's short-term and long-term health professional needs; (b) an assessment of the number of and the reasons for initial breaches by health professionals of repayment contracts; and (c) the grantee's history of compliance with reporting requirements including goals, objectives, evaluation plans, organizational structure, financial management, and personnel changes.

Professions and Specialties Needed

To be supported under this program, the State Program must establish State priorities for the selection of health professionals consistent with the NHSC LRP. At this time the Secretary has determined that priority will be given to the following health professionals: Physicians (M.D.s and D.O.s) who are certified or eligible to sit for the certifying examination in the specialty boards of family practice, obstetrics/gynecology, internal medicine, and pediatrics.

Other Award Information

This program is not subject to the Public Health System Reporting Requirements.

This program is subject to the provisions of Executive Order 12372 concerning intergovernmental review of Federal programs as implemented by 45 CFR part 100. Executive Order 12372 allows States the option of setting up a system to review applications from within their States under certain Federal programs. The application kit, to be made available under this notice, will contain a listing of States which have chosen to set up a review system and will provide a single point of contact (SPOC) in the States for that review. Applicants (other than federally recognized Indian tribal governments) should contact their State SPOC as early as possible to alert them to the prospective applications and receive any necessary instructions on the State process. For proposed projects serving more than one State, the applicant is advised to contact the SPOC of each affected State. The due date for State process recommendations is 60 days after the appropriate application deadline date. The BPHC does not guarantee that it will accommodate or explain its response to State process recommendations received after the due date.

The OMB *Catalog of Federal Domestic Assistance* number for this program is 93.165.

Dated: March 21, 1996.

Ciro V. Sumaya,

Administrator.

[FR Doc. 96–7459 Filed 3–27–96; 8:45 am]

BILLING CODE 4160–15–P

National Institutes of Health

National Institute of Dental Research; Notice of Closed Meetings

Pursuant to Section 10(d) of the Federal Advisory Committee Act, as amended (5 U.S.C. Appendix 2), notice is hereby given of the following National Institute of Dental Research Special Emphasis Panel (SEP) meetings:

Name of SEP: National Institute of Dental Research Special Emphasis Panel—ZDEIGN25–96–25.

Dates: April 4, 1996.

Time: 2:00 pm.

Place: Natcher Building, Rm. 4AN–44F, National Institutes of Health, Bethesda, MD 20892 (teleconference).

Contract Person: Dr. George Hausch, Chief, Grants Review Section, 4500 Center Drive, Natcher Building, Room 4AN–44F, Bethesda, MD 20892, (301) 594–2372.

Purpose/Agenda: To evaluate and review grant applications and/or contract proposals.

This notice is being published less than fifteen days prior to the meeting due to the urgent need to meet timing limitations imposed by the grant review cycle.

Name of SEP: National Institute of Dental Research Special Emphasis Panel-Review of Temporomandibular Disorders Applications 96—11.

Dates: April 23–24, 1996.

Time: 8:00 am.

Place: Marriott Suites, 6711 Democracy Blvd., Bethesda, MD 20892.

Contact Person: Dr. George Hausch, Chief, Grants Review Section, 4500 Center Drive Natcher Building, Room 4AN–44F Bethesda, MD 20892, (301) 594–2372.

Purpose/Agenda: To evaluate and review grant applications and/or contract proposals.

The meetings will be closed in accordance with the provisions set forth in secs. 552b(c)(4) and 552b(c)(6), Title 5, U.S.C. Applications and/or proposals and the discussions could reveal confidential trade secrets or commercial property such as patentable material and personal information concerning individuals associated with the application and/or proposals, the disclosure of which would constitute a clearly unwarranted invasion of personal privacy.

(Catalog of Federal Domestic Assistance Program No. 93.121, Oral Diseases and Disorders Research)

Dated: March 25, 1996.

Susan K. Feldman

Committee Management Officer, NIH.

[FR Doc. 96–7719 Filed 3–27–96; 8:45 am]

BILLING CODE 4140–01–M

National Institute of Environmental Health Sciences; Notice of Closed Meetings

Pursuant to Section 10(d) of the Federal Advisory Committee Act, as amended (5 U.S.C. Appendix 2), notice is hereby given of the following National Institute of Environmental Health Sciences Special Emphasis Panel (SEP) meetings:

Name of SEP: Research on the Inhalation Toxicology of Environmental Chemicals.

Date: April 5, 1996.

Time: 9:00 a.m.

Place: National Institute of Environmental Health Sciences, South Campus, Building 101, Conference Room D–350, Research Triangle Park, NC.

Contact Person: Dr. John Braun, National Institute of Environmental Health Sciences, P.O. Box 12233, Research Triangle Park, NC 27709.

Purpose/Agenda: To review and evaluate contract proposals.

This notice is being published less than fifteen days prior to this meeting due to the urgent need to meet

limitations imposed by the contract review and funding cycle.

Name of SEP: Development of Pathology Tissue Methodologies (Telephone Conference Call).

Date: April 29, 1996.

Time: 11:15 a.m.

Place: National Institute of Environmental Health Sciences, North Campus, Building 17, Conference Room 1713, Research Triangle Park, NC.

Contact Person: Dr. John Braun, National Institute of Environmental Health Sciences, P.O. Box 12233, Research Triangle Park, NC 27709.

Purpose/Agenda: To review and evaluate contract proposals.

These meetings will be closed in accordance with the provisions set forth in secs. 552b(c)(4) and 552b(c)(6), Title 5, U.S.C. Applications and/or proposals and the discussions could reveal confidential trade secrets or commercial property such as patentable material and personal information concerning individuals associated with the applications and/or proposals, the disclosure of which would constitute a clearly unwarranted invasion of personal privacy.

(Catalog of Federal Domestic Assistance Programs Nos. 93.113, Biological Response to Environmental Agents; 93.114, Applied Toxicological Research and Testing; 93.115, Biometry and Risk Estimation; 93.894, Resource and Manpower Development, National Institutes of Health)

Dated: March 25, 1996.

Susan F. Feldman,

Committee Management Officer, NIH.

[FR Doc. 96–7720 Filed 3–27–96; 8:45 am]

BILLING CODE 4140–01–M

Division of Research Grants; Notice of Closed Meetings

Pursuant to Section 19(d) of the Federal Advisory Committee Act, as amended (5 U.S.C. Appendix 2), notice is hereby given of the following Division of Research Grants Special Emphasis Panel (SEP) meetings:

Purpose/Agenda: To review individual grant applications.

Name of SEP: Biological and Physiological Sciences.

Date: April 2, 1996.

Time: 11:00 a.m..

Place: NIH, Rockledge 2, Room 6154, Telephone Conference.

Contact Person: Dr. David Remondini, Scientific Review Administrator, 6701 Rockledge Drive, Room 6154, Bethesda, Maryland 20892, (301) 435–1038.

Name of SEP: Biological and Physiological Sciences.

Date: April 3, 1996.

Time: 2:00 p.m..

Place: NIH, Rockledge 2, Room 6154, Telephone Conference.

Contact Person: Dr. David Remondini, Scientific Review Administrator, 6701 Rockledge Drive, Room 6154, Bethesda, Maryland 20892, (301) 435–1038.

This notice is being published less than 15 days prior to the above meetings due to the urgent need to meet timing limitations imposed by the grant review and funding cycle.

The meetings will be closed in accordance with the provisions set forth in secs. 552b(c)(4) and 552b(c)(6), Title 5, U.S.C. Applications and/or proposals and the discussions could reveal confidential trade secrets or commercial property such as patentable material and personal information concerning individuals associated with the applications and/or proposals, the disclosure of which would constitute a clearly unwarranted invasion of personal privacy.

(Catalog of Federal Domestic Assistance Program Nos. 93.306, 93.333, 93.337, 93.393–93.396, 93.837–93.844, 93.846–93.878, 93.892, 93.893, National Institutes of Health, HHS)

Dated: March 25, 1996.

Susan K. Feldman,

Committee Management Officer, NIH.

[FR Doc. 96–7718 Filed 3–27–96; 8:45 am]

BILLING CODE 4140–01–M

DEPARTMENT OF THE INTERIOR

Fish and Wildlife Service

Notice of Receipt of Applications for Permit

The following applicants have applied for a permit to conduct certain activities with endangered species. This notice is provided pursuant to Section 10(c) of the Endangered Species Act of 1973, *as amended* (16 U.S.C. 1531, *et seq.*):

Applicant: The Hawthorn Corporation, Grayslake, IL, PRT–812757.

The applicant requests a permit to reexport and reimport captive-born tigers (*Panthera tigris*) and progeny of the animals currently held by the applicant and any animals acquired in the United States by the applicant to/from worldwide locations to enhance the survival of the species through conservation education. This notificatation covers activities conducted by the applicant over a three year period.

Applicant: Columbus Zoo, Powell, OH, PRT–812687.

The applicant requests a permit to import one male captive-held jaguar (*Panthera onca*) from ARCAS, Peten, Guatamala for the purpose of enhancement of the species through captive propagation.

Applicant: Robert Landis, Fountain City, IN, PRT–812681.

The applicant requests a permit to import the sport-hunted trophy of one male bontebok (*Damaliscus pygarcus dorcas*) culled from a captive herd maintained under the management program of the Republic of South Africa, for the purpose of enhancement of the survival of the species.

Applicant: Ludwig Muller, Miami, FL, PRT–810114.

The applicant requests a permit to export one male and one female cotton-top tamarin (*Saguinus oedipus*) to the Fundacion Primatologica , Costa Rica, for the purpose of enhancement of the survival of the species through scientific research and propagation.

Applicant: James E. Martin, Gastonia, NC, PRT–812642.

The applicant requests a permit to import the sport-hunted trophy of one bontebok (*Damaliscus pygarcus dorcas*) culled from the captive herd maintained under the management program of the Republic of South Africa, for the purpose of enhancement of the survival of the species.

Applicant: Academy of Natural Sciences, Philadelphia, PA, PRT–678963.

The applicant requests a permit to export and re-import non-living museum specimens of endangered and threatened species of plants and animals previously accessioned into the permittee's collection for scientific research.

Written data or comments should be submitted to the Director, U.S. Fish and Wildlife Service, Office of Management Authority, 4401 North Fairfax Drive, Room 430, Arlington, Virginia 22203 and must be received by the Director within 30 days of the date of this publication.

Documents and other information submitted with these applications are available for review, subject to the requirements of the Privacy Act and Freedom of Information Act, by any party who submits a written request for a copy of such documents to the following office within 30 days of the date of publication of this notice: U.S. Fish and Wildlife Service, Office of Management Authority, 4401 North Fairfax Drive, Room 430, Arlington, Virginia 22203. Phone: (703/358–2104); Fax: (703) 358–2281).

Dated: March 22, 1996.

Caroline Anderson,

Acting Chief, Branch of Permits, Office of Management Authority.

[FR Doc. 96–7468 Filed 3–27–96; 8:45 am]

BILLING CODE 4310–55–P

Notice of Meeting

AGENCY: Fish and Wildlife Service, Interior.

SUMMARY: Pursuant to section 10(a)(2) of the Federal Advisory Committee Act (5 U.S.C. App. I), this notice announces a meeting of the Klamath River Basin Fisheries Task Force, established under the authority of the Klamath River Basin Fishery Resources Restoration Act (16 U.S.C. 460ss *et seq.*). The meeting is open to the public.

DATES: The Klamath River Basin Fisheries Task Force will meet from 9:00 a.m. to 6:00 p.m. on Tuesday, April 23, 1996, and from 8:00 a.m. to 3:40 p.m. on Wednesday, April 24, 1996.

PLACE: The meeting will be held at the B.P.O.E. Elks Lodge, 25 Hawkins Street, Klamath Falls, Oregon.

FOR FURTHER INFORMATION CONTACT: Dr. Ronald A. Iverson, Project Leader, U.S. Fish and Wildlife Service, P.O. Box 1006 (1215 South Main), Yreka, California 96097–1006, telephone (916) 842–5763.

SUPPLEMENTARY INFORMATION: The principal agenda items at this meeting will be a review of the National Biological Survey jurisdictional analysis regarding water management in the Klamath River Watershed; a decision on elements of a water quantity model as part of an instream flow study for the Klamath River Basin; a decision on adoption of a draft Upper Basin Amendment to the Long Range Plan for the Klamath River Basin Conservation Area Fisheries Restoration (KR) Program; consideration of TF comments on the Long Term Klamath Project Operation Plan; a decision on Task Force priorities given a limited budget; a decision on revision of Request for KR Program Proposals and proposal ranking procedures; and the recommendation to recognize private landowners or groups for restoration efforts in the Klamath River Basin.

For background information on the Klamath River Basin Fisheries Task Force, please refer to the notice of their initial meeting that appeared in the Federal Register on July 8, 1987 (52 FR 25639).

Dated: March 21, 1996.

Donald V. Friberg,

Acting Regional Director.

[FR Doc. 96–7596 Filed 3–27–96; 8:45 am]

BILLING CODE 4310–55–P

Bureau of Land Management

[WO–350–1430–01–24 1A]

Extension of Currently Approved Information Collection; OMB Approval Number 1004–0004

AGENCY: Bureau of Land Management, Interior.

ACTION: Notice and request for comments.

SUMMARY: In accordance with the Paperwork Reduction Act of 1995, the Bureau of Land Management (BLM) is announcing its intention to request extension of approval for the collection of information from those persons who apply for a desert-land entry to reclaim, irrigate, and cultivate arid and semiarid public lands in the Western United States. The BLM uses the information to determine if the applicant is eligible to make a desert-land entry under the Desert Land Act of 1877.

DATES: Comments on the proposed information collection must be received by May 28, 1996, to be considered.

ADDRESSES: Comments may be mailed to: Regulatory Management Team (420), Bureau of Land Management, 1849 C Street NW., Room 401LS, Washington, D.C. 20240.

Comments may be sent via Internet to: !WO140@attmail.com. Please include ''Attn: 1004–0004'' and your name and address in your Internet message.

Comments may be hand delivered to the Bureau of Land Management Administrative Record, Room 401 L Street NW., Washington, D.C.

Comments will be available for public review at the L Street address during regular business hours (7:45 A.M. to 4:15 P.M., Monday through Friday).

FOR FURTHER INFORMATION CONTACT: Alzata L. Ransom, Realty Use Group, at (202) 452–7772.

SUPPLEMENTARY INFORMATION: In accordance with 5 CFR 1320.12(a), BLM is required to provide 60-day notice in the Federal Register concerning a collection of information contained in published current rules to solicit comments on (a) whether the collection of information is necessary for the proper performance of the functions of the agency, including whether the information has practical utility; (b) the accuracy of the agency's estimate of the burden of the collection of information, including the validity of the methodology and assumptions used; (c) ways to enhance the quality, utility, and clarity of the information to be collected; and (d) ways to minimize the burden of the collection of information on those who are to respond, including through the use of appropriate automated, electronic, mechanical, or technological collection techniques or other forms of information technology.

The Desert Land Act of March 3, 1877 (19 Stat. 377; 43 U.S.C. 321–323), as amended by the Act of March 3, 1891 (26 Stat. 1096; 43 U.S.C. 231, 323, 325, 327–329), was passed by the Congress to encourage and promote the economic development of the arid and semiarid public lands. Under the Act, U.S. citizens may apply for a desert-land entry to reclaim, irrigate, and cultivate arid and semiarid public lands in the Western United States. The regulations in 43 CFR 2520 provide guidelines and procedures to obtain public lands under the Act. These regulations were adopted on June 13, 1970 (35 FR 9581).

You qualify to file a desert-land entry if you are: (a) a Citizen of the United States; (b) 21 years old; and (c) a resident of the State of Arizona, California, Colorado, Idaho, Montana, New Mexico, North Dakota, South Dakota, Utah, Washington, or Wyoming (no residency is required in the State of Nevada).

You may apply for one or more tracts of public lands totaling no more than 320 acres. The lands are located in the States of Arizona, California, Colorado, Idaho, Montana, Nevada, New Mexico, North Dakota, Oregon, South Dakota, Utah, Washington, and Wyoming. The lands must be surveyed, unreserved, unappropriated, non-mineral, non-timber, and incapable of producing an agricultural crop without irrigation. The lands must be suitable for agricultural purposes and more valuable for that purpose than any other. The tracts of land must be sufficiently close to each other to be managed satisfactorily as an economic unit.

You must find lands that you believe can be economically developed and determine the legal land description. You must contact the BLM State Office where the lands are located and verify the lands are available for desert-land application. If the lands are available for desert-land application, you may obtain a desert land entry application (Form 2520–1) from the BLM State Office.

The information collected on Form 2520–1 is required by the regulations at 43 CFR Part 2520 to process requests for public lands under the provisions of the Desert Land Act. The following information is collected on the form: (a) Description of the lands you are applying for; (b) evidence of your legal right to the use of water for irrigation; (c) a permit from the State Department of Water Administration; (d) detailed description of soil characteristics, irrigation requirements, and economic

feasibility; and (e) full disclosure of your plans, arrangements (financial and otherwise), pertaining to the development and operation of your desert-land entry.

BLM uses the information you provide to (a) determine your eligibility to make a desert-land entry, (b) classify the lands included in the application, and (c) ensure that the requirements of the Desert Land Act and implementing regulations are met. If BLM did not collect this information, beneficial development of desert lands would be precluded. This collection of information is short, simple, and limited to the information necessary for efficient operation of the program. The information, which is required by law, is a voluntary, non-recurring submission necessary to receive a benefit. There is no other source for the information, and failure by the applicant to furnish the required information will result in the applicant not being allowed to reclaim, irrigate and cultivate desert lands.

Based on its experience administering the program, BLM estimates that approximately 20 applications are received annually and that it takes an average of 90 minutes for a applicant to supply the requested information. The frequency of response is once per entry. Based on the estimated number of applications BLM receives annually and the average time it takes an applicant to supply the requested information, the total annual burden is collectively 30 hours.

Any interested member of the public may request and obtain, without charge, a copy of the desert land entry application (Form 2520–1) by contacting the person identified under **FOR FURTHER INFORMATION CONTACT**.

All responses to this notice will be summarized and included in the request for Office of Management and Budget approval. All comments will also become part of the public record.

Dated: March 25, 1996.

Annetta L. Cheek,

Chief, Regulatory Management Team.

[FR Doc. 96–7588 Filed 3–27–96; 8:45 am]

BILLING CODE 4310–84–P

[WO–350–1430–00]

Extension of Currently Approved Information Collection; OMB Approval Number 1004–0010

AGENCY: Bureau of Land Management, Interior.

ACTION: Notice and request for comments.

SUMMARY: In accordance with the Paperwork Reduction Act of 1995, the Bureau of Land Management (BLM) is announcing its intention to request extension of approval for the collection of information from those persons seeking to acquire title to public land under the color-of-title authority. The BLM collects information to assure that statutory requirements for conveyance of title under the Color-of-Title Act have been met.

DATES: Comments on the proposed information collection must be received by May 28, 1996, to be considered.

ADDRESSES: Comments may be mailed to: Regulatory Management Team (420), Bureau of Land Management, 1849 C Street NW., Room 401 LS, Washington, DC 20240.

Comments may be sent via Internet to: !WO140@attmail.com. Please include ''Attn: 1004–0011'' and your name and return address in your Internet address.

Comments may be hand delivered to the Bureau of Land Management Administrative Record, Room 401, L Street NW., Washington, DC 20036.

Comments will be available for public review at the L Street address during regular business hours (7:45 a.m. to 4:15 p.m., Monday through Friday).

FOR FURTHER INFORMATION CONTACT: Vanessa R. Engle, Realty Use Group, (202) 452–7776.

SUPPLEMENTARY INFORMATION: In accordance with 5 CFR 1320.12(a), BLM is required to provide 60-day notice in the Federal Register concerning a collection of information contained in published current rules to solicit comments on (a) Whether the collection of information is necessary for the proper performance of the functions of the agency, including whether the information has practical utility; (b) the accuracy of the agency's estimate of the burden of the collection of information, including the validity of the methodology and assumptions used; (c) ways to enhance the quality, utility, and clarity of the information to be collected; and (d) ways to minimize the burden of the collection of information on those who are to respond, including through the use of appropriate automated, electronic, mechanical, or other technological collection techniques or other forms of information technology. BLM will receive and analyze any comments sent in response to this notice and include them with its request for approval from the Office of Management and Budget under 44 U.S.C. 3501 *et seq.*

The Color-of-Title Act of December 22, 1928, as amended (43 U.S.C. 1068, 1068a, 1068b), provides for the issuance of a land patent (deed) to eligible individuals, groups, or corporations who believe they have a valid claim to public lands under color-of-title. The information collected on Conveyances Affecting Color or Claim of Title Form 2540–2, is required by Departmental regulations 43 CFR 2541.2 (35 FR 9592, June 13, 1970), and is used by the agency to identify information concerning conveyances of title and related matters.

Any individual seeking to acquire a title to public land under the color-of-title authority must make application and provide information essential to compliance with law, regulations, and procedures. As required by the Color-of-Title Act and 43 CFR 2541.2 (b) and (c), information provided on Form 2540–2 is used to certify the applicant's claim for land property title rights from the Federal government. Without this conveyance information, the BLM cannot finalize the claim.

Form 2540–2 may be submitted in person or by mail to the proper BLM office. The following is an explanation of specific items of information requested on Conveyances Affecting Color of Claim of Title 2540–2, pursuant to 43 CFR 2541.2 (b) and (c): (1) the name of applicant is needed to identify the person/entity filing a claim; (2) the legal description of the claimed land must be listed as recorded in public records of the county concerned; (3) grantor-grantee recorded ownership for each conveyance of the subject property as required by law; and (4) certification from the public official administering the county records or a certified abstracter must be provided to determine the validity of the application. Response is mandatory if the color-of-title claimant wishes to obtain the benefits of the statute and gain clear title to the claimed property. Failure to provide the necessary information results in the rejection of the color-of-title application.

If the information on Conveyances Affecting Color or Claim of Title Form 2540–2 was not collected, the BLM would be unable to carry out the mandate of the Color-of-Title Act and the responsibilities for implementing 43 CFR 2540 and 2541. Form 2450–2 requires only the minimal information necessary to determine claim validity. Based on its experience processing Color-of-Title applications, the BLM estimates the public reporting burden for completing Conveyances Affecting Color or Claim of Title Form 2540–2 is one hour. It is estimated that approximately 37 Color-of-Title applications are filed annually for a total annual burden of 37 hours.

Any interested member of the public may request and obtain, without charge, a copy of Conveyances Affecting Color or Claim of Title Form 2540–2 by contacting any BLM Office or the person identified under **FOR FURTHER INFORMATION CONTACT**. All responses to this notice will be summarized and included in the request for Office of Management and Budget approval. All comments will also become part of the public record.

Dated: March 25, 1996.

Annetta L. Cheek,

Chief, Regulatory Management Team.

[FR Doc. 96–7589 Filed 3–27–96; 8:45 am]

BILLING CODE 4310–84–P

[WO–310–1310–01–24–1A]

Extension of Currently Approved Information Collection; OMB Approval Number 1004–0134

AGENCY: Bureau of Land Management, Interior.

ACTION: Notice and request for comments.

SUMMARY: In accordance with the Paperwork Reduction Act of 1995, the Bureau of Land Management (BLM) is announcing its intention to request extension of approval for the collection of information for operators and operating rights owners of Federal and Indian (except Osage) oil and gas leases. BLM uses the information to determine whether proposed operations may be approved to begin, to alter operations, or to allow operations to continue. The information also enables BLM to monitor compliance with granted approvals. Granted approvals include drilling plans, prevention of waste, protection of resources, development of a lease, measurement, production verification, and protection of public health and safety.

DATES: Comments on the proposed information collection must be received by May 28, 1996, to be considered.

ADDRESSES: Comments may be mailed to: Regulatory Management Team (420), Bureau of Land Management, 1849 C Street NW, Room 401 LS, Washington, D.C. 20240.

Comments may be sent via Internet to: !WO140@attmail.com. Please include ''Attn: 1004–0134'' and your name and return address in your Internet message.

Comments may be hand delivered to the Bureau of Land Management Administrative Record, Room 401, 1620 L Street, NW, Washington, D.C.

Comments will be available for public review at the L Street address during regular business hours (7:45 A.M. to 4:15 P.M., Monday through Friday).

FOR FURTHER INFORMATION CONTACT: Barbara Gamble, Compliance Team, Fluids Group, (202) 452–0340.

SUPPLEMENTARY INFORMATION: In accordance with 5 CFR 1320.12(a), BLM is required to provide 60-day notice in the Federal Register concerning a collection of information contained in published current rules to solicit comments on (a) whether the collection of information is necessary for the proper performance of the functions of the agency, including whether the information will have practical utility; (b) the accuracy of the agency's estimate of the burden of the collection, including the validity of the methodology and assumptions used; (c) ways to enhance the quality, utility, and clarity of the information to be collected; and (d) ways to minimize the burden of the collection of information on those who are to respond, including through the use of appropriate automated, electronic, mechanical, or other technological collection techniques or other forms of information technology.

In accordance with the Federal Oil and Gas Royalty Management Act of 1982 (30 U.S.C. 1701 *et seq.*); the Mineral Leasing Act of 1920, as amended (30 U.S.C. 181 *et seq.*); the Mineral Leasing Act for Acquired Lands of 1947, as amended (30 U.S.C. 351–359); the various Indian leasing acts; and the National Environmental Policy Act of 1969 (NEPA), as amended (42 U.S.C. 4321 *et seq.*), BLM's implementing regulations at 43 CFR Part 3160 require affected Federal and Indian (except Osage) oil and gas operators and operating rights owners to maintain records or provide information by means other than the submission of forms.

The recordkeeping and non-form information collection items required under various provisions of 43 CFR Part 3160 pertain to data submitted by the operator or operating rights owner. The information either provides data so that proposed operations may be approved or enables the monitoring of compliance with granted approval and is used to grant approval to begin or alter operations or to allow operations to continue. The specific requirements are listed by regulation section.

The information required under 43 CFR Part 3160 covers a broad range of possible operations, and rarely will any specific operator be required to obtain or provide each item. Many of the requirements are one-time filings used to gain approval to conduct a variety of oil and gas operations. Others are routine data submissions that are used to monitor production and ensure compliance with lease terms, regulations, Orders, Notices to Lessees, and conditions of approval. Production information from each producing lease is used to verify volumes and disposition of oil and gas produced on Federal and Indian lands. All recordkeeping burdens are associated with the non-form items requested.

Based on its experience managing the activities required by these regulations, BLM estimates the annual burden of each provision, including recordkeeping, as follows.

Regulatory information collection (43 CFR)	Description	Total burden hours	Total respondents
3162.3–1(a)	Well-Spacing Program	450	150
3162.3–1(e)	Drilling Plans	28,750	2,875
3162.6	Well Markers	30	300
3162.5–2(b)	Direction Drilling	165	(5% of wells) 165
3162.4–2(a)	Drilling Tests, Logs, Surveys	330	(10% of wells) 330
3162.3–4(a)	Plug and Abandon for Water Injection	600	1,200
3162.3–4(b)	Plug and Abandon for Water Source	600	1,200
3162.7–1(d)	Additional Gas Flaring	400	400
3162.5–1(c)	Report of Spills, Discharges, or Other Undesirable Events	200	200
3162.5–1(b)	Disposal of Produced Water	3,000	1,500
3162.5–1(d)	Contingency Plan	1,000	50
3162.4–1(a) and 3162.7–5(d)(1).	Schematic/Facility Diagrams	28,851	2,350
3162.7–1(b)	Approval and Reporting of Oil in Pits	260	520

Regulatory information collection (43 CFR)	Description	Total burden hours	Total respondents
3164.1 (Order No. 3)	Prepare Run Tickets	15,000	90,000
3162.7–5(b)	Records on Seals	7,500	90,000
3165.1(a)	Application for Suspension	800	100
3165.3(b)	State Director Review	800	100
3162.7–5(c)	Site Security	7,454	2,415
Total		96,190	193,855

The respondents already maintain the types of information collected for their own recordkeeping purposes and need only submit the required information. All information collections in the regulations at 43 CFR Part 3160 that do not require a form are covered by this notice. BLM intends to submit these information collections collectively for approval by the Office of Management and Budget, as they were originally submitted and approved.

All responses to this notice will be summarized and included in the request for Office of Management and Budget approval. All comments will also become part of the public record.

Dated: March 25, 1996.

Annetta L. Cheek,

Chief, Regulatory Management Team.

[FR Doc. 96–7590 Filed 3–27–96; 8:45 am]

BILLING CODE 4310–84–P

[WO–310–1310–01–24–1A]

Extension of Currently Approved Information Collection; OMB Approval Number 1004–0135

AGENCY: Bureau of Land Management, Interior.

ACTION: Notice and request for comments.

SUMMARY: In accordance with the Paperwork Reduction Act of 1995, the Bureau of Land Management (BLM) is announcing its intention to request extension of approval for the collection of information from operators and operating rights owners of Federal and Indian (except Osage) oil and gas leases who submit a Sundry Notices and Reports on Wells (Form 3160–5). BLM uses the information collected to approve proposed operations and ensure compliance with granted approvals.

DATES: Comments on the proposed information collection must be received by May 28, 1996 to be considered.

ADDRESSES: Comments may be mailed to: Regulatory Management Team (420), Bureau of Land Management, 1849 C Street NW, Room 401 LS, Washington, D.C. 20240.

Comments may be sent via Internet to: !WO140@attmail.com. Please include ''Attn: 1004–0135'' and your name and return address in your Internet message.

Comments may be hand delivered to the Bureau of Land Management Administrative Record, Room 401, 1620 L Street, NW, Washington, D.C.

Comments will be available for public review at the L Street address during regular business hours (7:45 A.M. to 4:15 P.M., Monday through Friday).

FOR FURTHER INFORMATION CONTACT: Barbara Gamble, Compliance Team, Fluids Group, (202) 452–0340.

SUPPLEMENTARY INFORMATION: In accordance with 5 CFR 1320.12(a), BLM is required to provide 60-day notice in the Federal Register concerning a collection of information contained in published current rules to solicit comments on (a) whether the collection of information is necessary for the proper performance of the functions of the agency, including whether the information will have practical utility; (b) the accuracy of the agency's estimate of the burden of the collection, including the validity of the methodology and assumptions used; (c) ways to enhance the quality, utility, and clarity of the information to be collected; and (d) ways to minimize the burden of the collection of information on those who are to respond, including through the use of appropriate automated, electronic, mechanical, or other technological collection techniques or other forms of information technology.

In accordance with the Federal Oil and Gas Royalty Management Act of 1982 (30 U.S.C. 1701 *et seq.*); the Mineral Leasing Act of 1920, as amended (30 U.S.C. 181 *et seq.*); the Mineral Leasing Act for Acquired Lands of 1947, as amended (30 U.S.C. 351–359); the various Indian leasing acts; and the National Environmental Policy Act of 1969 (NEPA), as amended (42 U.S.C. 4321 *et seq.*), BLM's regulations at 43 CFR 3162.3–2 require oil and gas operators on Federal and restricted Indian lands to submit Form 3160–5, Sundry Notices and Reports on Wells, in order to obtain authority to perform specific additional operations on a well and to report the completion of such work. In addition, 43 CFR 3162.5–1 provides authority to require the operator to exercise diligence when disposing of produced waters. The specific data required on these forms concerns modifications to existing wells or construction requirements of produced water disposal pits. The regulation at 43 CFR 3162.3–2 divides the proposed action into three categories based on the nature of the impact. Some actions require submitting the form for approval prior to beginning work and again after completion of operations; other actions require submission only after completion; and still others do not require reporting.

All data is delivered to BLM by the operator or its agent. The data pertains to modifying operations conducted under the terms and provisions of an oil and gas lease (a contractual agreement between a lessee and the United States) for Federal or restricted Indian lands. The compilation of this data enables oversight and approval prior to any modifications to existing wells. In the case of a produced water disposal pit approval, this data provides the technical aspects of pit design to allow for sufficient water containment, thereby preventing unnecessary releases of produced water into the environment.

BLM estimates that approximately 34,000 notices will be filed annually with an estimated completion time of 25 minutes each, for a total annual burden of 14,166 hours. Respondents are operators and operating rights owners of Federal and Indian (except Osage) oil and gas leases. The frequency of response is variable depending on the type of activities conducted at oil and gas wells and on operational circumstances.

Any interested member of the public may request and obtain, without charge, a copy of Form 3160–5 by contacting the person identified under **FOR FURTHER INFORMATION CONTACT.**

All responses to this notice will be summarized and included in the request for Office of Management and Budget approval. All comments will also become part of the public record.

Dated: March 25, 1996.

Annetta L. Cheek,

Chief, Regulatory Management Team.

[FR Doc. 96–7591 Filed 3–27–96; 8:45 am]

BILLING CODE 4310–84–P

[CA–065–06–1990–01]

Environmental Statements; California Desert Conservation Area, CA

AGENCY: Bureau of Land Management, Interior.

ACTION: Notice of intent to prepare an Environmental Impact Statement for an open pit, heap leach gold mine on portions of public lands in the California Desert Conservation Area, Kern County, CA; and notice of scoping period and public meetings.

SUMMARY: Pursuant to section 102(2)(c) of the National Environmental Policy Act of 1969, the Bureau of Land Management (BLM) will be preparing a joint Environmental Impact Statement/Environmental Impact Report (EIS/EIR) for addressing impacts of the proposed gold mine development in Kern County, CA. The BLM invites comments and suggestions on the scope of the analysis.

DATES: Public scoping meetings will be held on:

Date: April 16, 1996—Tuesday
Time: 6:30 p.m.–10:00 p.m.
Place: Rosamond High School, 2925 Rosamond Blvd, Rosamond, CA 93560, Glennan Gymnasium

Date: April 17, 1996—Wednesday
Time: 6:30 p.m.–10:00 p.m.
Place: Mojave High School, 15732 ''O'' St., Mojave, CA 93501, Mustang Gymnasium

ADDRESSES: Scoping comments may be sent to: BLM Ridgecrest Resource Area Manager, 300 S. Richmond, Ridgecrest, CA 93555, Attn: Ahmed Mohsen, EIS Coordinator.

SUPPLEMENTARY INFORMATION: Golden Queen is proposing to construct and operate the Soledad Mountain Project, an open pit precious metals (gold and silver) mining and cyanide leaching processing operation at the Soledad Mountain project area located approximately five miles southwest of the town of Mojave in Kern County, California.

The proposed action includes: construction of facilities; mining and processing of precious metals ores at the rate of three to four million tons per year for a period of ten to sixteen years; stockpiling of overburden materials; sales of overburden materials as aggregate and construction materials; and reclamation of the project site.

The project area is approximately 1,228 acres, of which 959 acres are private land and 269 acres are unpatented mining claims on public lands administered by BLM. The proposed surface disturbance is approximately 782 acres on private lands and 153 acres on public lands. The proposed mining operation includes twelve interconnected open pit mining areas within the ultimate pit boundary of the proposed open pit.

FOR FURTHER INFORMATION CONTACT: Ahmed Mohsen, BLM EIS Coordinator at (619) 384–5421.

Dated: March 21, 1996.

Lee Delaney,

Area Manager.

[FR Doc. 96–7495 Filed 3–27–96; 8:45 am]

BILLING CODE 4310–40–M

[OR–015–96–1610–00: G6–0088]

Management Framework Plans; Oregon

AGENCY: Bureau of Land Management, Interior.

ACTION: High Desert Management Framework Proposed Plan Amendment and Final Environmental Impact Statement for Lake Abert Area of Critical Environmental Concern, Notice of Availability.

SUMMARY: Pursuant to section 102(2)(c) of the National Environmental Policy Act, section 202(f) of the Federal Land Policy and Management Act, and 43 CFR Part 1610, the Lakeview District has completed a proposed plan amendment and final environmental impact statement (PA/FEIS) covering a proposal to designate the Lake Abert and the surrounding vicinity as an area of critical environmental concern (ACEC).

The proposed PA/FEIS addresses the management of resources within approximately 123,000 acres of public land and 101,700 acres of reserved mineral estate administered by the BLM located approximately 30 miles north of the town of Lakeview in central Lake County, Oregon. The proposed ACEC includes approximately 49,900 acres of public lands administered by the BLM.

DATES: The public review/protest period for the proposed PA/FEIS will officially begin when the U.S. Environmental Protection Agency publishes its Notice of Availability of the proposed PA/FEIS in the Federal Register, which is expected on or about March 29, 1996.

FOR FURTHER INFORMATION CONTACT: Paul Whitman, BLM, Lakeview District Office, P.O. Box 151, Lakeview, Oregon 97630 (Telephone: 541–947–6110). Those wishing to provide comments should submit them in writing to Scott Florence at the above address.

SUPPLEMENTARY INFORMATION: The document presents management goals, objectives, and seven management alternatives for BLM-administered lands within the planning area. The alternatives range from no action (no change in present management), to designating portions of the planning area as an ACEC with somewhat restrictive management, to designating the entire planning area as an ACEC with very restrictive management. Alternative 7 is the agency preferred plan and involves designating about 49,900 acres of public lands as an ACEC. The area was evaluated and found to meet the ACEC designation criteria and require special management for four resource values: wildlife, visual, cultural, and ecological processes. Off-highway vehicle (OHV) use, mining location, and rights-of-way location would be restricted within the ACEC. Livestock grazing would be restricted within that portion of Abert Rim wilderness study area (WSA) falling within the ACEC, as well as within most riparian zones, and ecologically sensitive areas. Mineral leasing would be closed within approximately 18,000 acres of the ACEC with the remainder of the area being restricted.

A draft plan amendment and environmental impact statement was issued for a 90-day review period in May 1995. The review period ended on August 16, 1995. A total of 37 comment letters were received during the review period. An interdisciplinary planning team assessed these comments and utilized them in making changes in the proposed PA/FEIS. The final document has been prepared in an abbreviated format. Major sections of the draft are not repeated in the final. Copies of the draft are available for reference by contacting the point of contact listed above.

Those individuals, organizations, native American tribes, and agencies with a known interest in the plan have been sent a copy of the proposed PA/FEIS. Persons desiring a copy of the document should contact the point of contact listed above. Reading copies of the document are available at the Lake, Klamath, and Harney County, Oregon, libraries and at the following BLM locations: Office of External Affairs, Main Interior Building, Room 5600, 18th and C Streets, NW, Washington DC 20240, and Public Room, Oregon State Office, 1515 SW 5th, Portland, Oregon 97201.

Administrative Remedies

Approval of this plan amendment constitutes official ACEC designation and will be documented in a public Record of Decision (ROD) which will be made available to all parties who received a copy of the proposed PA/FEIS. The BLM planning process provides an opportunity for an administrative review via a plan protest to the BLM Director, if you believe the approval of the proposed plan amendment would be in error under 43 CFR 1610.5–2. Careful adherence to the following guidelines will assist in preparing such a protest that will assure the greatest consideration to your point of view:

(1) A protesting party may raise only those issues which he/she submitted for the record during the planning process.

(2) There is no provision within BLM's regulations allowing for an extension of time to file a protest, nor will one be granted. To be considered timely, a protest must be postmarked no later than the closing date of the comment/protest period. It is recommended that your protest be sent certified mail, return receipt requested.

(3) Protests must be submitted in writing to: Director (480), Bureau of Land Management, Resource Planning Team, 1849 C Street, NW, Washington, DC 20240.

(4) To be considered complete, a protest must contain, at a minimum, the following information:

(a) The name, address, telephone number, and interest of the person filing the protest.

(b) A statement of the issue(s) being protested.

(c) A statement of the part(s) of the proposed plan amendment being protested, referencing specific pages, paragraphs, sections, tables, maps, etc. * * * within the document.

(d) A copy of all documents addressing the issue(s) that you submitted during the planning process or a reference to the date the issue(s) were discussed by you for the record.

(e) A concise statement explaining why the BLM State Director's decision is believed to be incorrect. A protest which merely expresses disagreement with the State Director's decision, without presenting support data/information, will be dismissed.

Dated: March 15, 1996.

Edwin J. Singleton,

District Manager.

[FR Doc. 96–7510 Filed 3–27–96; 8:45 am]

BILLING CODE 4310–33–P

[OR–050–1020–00: GP6–0101]

Notice of Meeting of John Day-Snake Resource Advisory Council

AGENCY: Bureau of Land Management, Prineville District.

ACTION: Meeting of John Day-Snake Resource Advisory Council; LaGrande, Oregon; May 1–3, 1996.

SUMMARY: A meeting of the John Day-Snake Resource Advisory Council and Council Subgroups will be held on May 1, 1996 from 1:00 pm to 5:00 pm, on May 2, 1996 from 8:00 am to 5:00 pm and on May 3, 1996 from 8:00 am to 12 noon at the La Grande Ranger District, 3502 Highway 30, La Grande, Oregon. Public comments will be received by the Council from 4:00 pm to 5:00 pm on Wednesday, May 1, 1996. Topics to be discussed include the Interior Columbia Basin Ecosystem Management Project, standards for rangeland health and guidelines for livestock grazing, and proposed land exchanges in the John Day-Snake Region. A field trip to discuss riparian and watershed management will be held on May 2, 1996. Transportation will not be provided for the public to the field training site on May 2, 1996.

FOR FURTHER INFORMATION CONTACT: James L. Hancock, Bureau of Land Management, Prineville District Office, 3050 N.E. Third Street, Prineville, Oregon 97754, or call 541–416–6700.

Dated: March 20, 1996.

James L. Hancock,

District Manager.

[FR Doc. 96–7511 Filed 3–27–96; 8:45 am]

BILLING CODE 4310–33–M

[CO–030–06–1610–00–1784]

Southwest Colorado Resource Advisory Council Meetings

AGENCY: Bureau of Land Management, Interior.

ACTION: Notice; Resource Advisory Council Meetings.

SUMMARY: In accordance with the Federal Advisory Committee Act (5 U.S.C.), notice is hereby given that the Southwest Colorado Resource Advisory Council (SW RAC) will meet on Thursday, April 11, 1996, at the Delta County Courthouse in Delta, Colorado, and on Thursday, May 9, 1996, at the Log Cabin in Norwood, Colorado.

DATES: The meetings will be held on Thursday, April 11, 1996, and on Thursday, May 9, 1996. Both meetings will begin at 9:00 a.m. and end at 4:30 p.m.

ADDRESSES: For further information, contact Roger Alexander, Bureau of Land Management, Montrose District Office, 2465 South Townsend Avenue, Montrose, Colorado 81401; Telephone 970–249–7791; TDD 970–249–4639.

SUPPLEMENTARY INFORMATION: The April 11, 1996, meeting is scheduled to begin at 9:00 a.m. in Room 234, Delta County Courthouse, 5th & Palmer, Delta, Colorado. The agenda for the morning will include an update on the development of standards for rangeland health and guidelines for livestock grazing (S&Gs), a presentation on the environmental analysis, land use planning, and public participation components of the S&G process, and time will be provided to address additional issues identified by advisory council members or members of the public attending the meeting. The afternoon session will consist of a field trip to demonstrate how the S&Gs will be used in the management of the public lands. The public is invited to attend both the morning session and the field trip. Field trip participants must provide their own lunch, water, and transportation (four wheel drive or high clearance vehicles are necessary).

The May 9, 1996, meeting is scheduled to begin at 9:00 a.m. in the Log Cabin, 1120 Lucerne, Norwood, Colorado. The morning agenda will focus on collaborative planning efforts, and time will be provided to address additional issues identified by advisory council members or members of the public attending the meeting. The afternoon session will consist of a field trip to key locations within the San Miguel River Area of Critical Environmental Concern/Special Recreation Management Area. The public is invited to attend both the morning session and the field trip. Field trip participants must provide their own lunch, water, and transportation.

All Resource Advisory Council meetings are open to the public. Interested persons may make oral statements to the Council, or written statements may be submitted for the Council's consideration. Depending on the number of persons wishing to make oral statements, a per-person time limit may be established by the Montrose District Manager.

Summary minutes for the Council meeting will be maintained in the Montrose District Office and will be available for public inspection and reproduction during regular business hours within thirty (30) days following the meeting.

Dated: March 25, 1996.

Mark W. Stiles,

District Manager.

[FR Doc. 96–7735 Filed 3–27–96; 8:45 am]

BILLING CODE 4310–JB–P

[CA–017–1920–4686; CACA 36507]

Notice of Intent To Amend Bishop Resource Management Plan, Bakersfield District, California; Notice of Exchange Proposal: Manzanar Exchange, California

AGENCY: Bureau of Land Management, Interior.

ACTION: Notice of Intent to amend the Bishop Resource Management Plan's list of public land disposal parcels, adding a 275 acre parcel and a Notice of Exchange Proposal for the Manzanar Exchange involving public and private lands in Inyo County, CA.

SUMMARY: On March 3, 1992, the President signed the Manzanar Natural Historic Site Act which authorized the acquisition of 500 acres of land at the historic site only by donation or exchange. The site is owned by the City of Los Angeles Department of Water and Power (LADWP). In April 1995 the National Park Service (NPS), Bureau of Land Management (BLM) and the LADWP entered into a Memorandum of Understanding (MOU) regarding an exchange of public land for the Manzanar Site. The General Management Plan for Manzanar identified 585 acres for inclusion in the site and an additional 215 acres having historic value is desired to expand the site to a total of 800 acres more or less. As per the MOU, LADWP would select and receive public land identified in the Bishop Resource Management Plan (RMP) for disposal. The Notice of Intent to amend the Bishop RMP resulted from the selection process by LADWP. A portion of the public land selected by LADWP for the Manzanar exchange is 275 acres having a portion of the dry Owens River. This river portion is also part of the Owens River rewatering project, a project agreed to by LADWP and the County of Inyo. Both LADWP and the County have indicated that ownership of this river portion should be by LADWP which would simplify administering the rewatering project. It is in the public interest to amend the Bishop RMP and identify this 275 acres parcel for disposal thereby facilitating the Manzanar exchange. The Notice of Exchange Proposal is for the Manzanar exchange. In the exchange LADWP would transfer up to 800 acres more or less of the Manzanar site to the NPS and the BLM would exchange public land to the LADWP. LADWP has agreed that the long-term intent is to release the identified exchange land in the Independence area or more suitable land into private ownership for community development. It is in the public interest to proceed with the exchange thereby acquiring the Manzanar Site for the NPS and implementing a portion of the Bishop RMP (Land Disposal). The exchange involves the following lands located in the County of Inyo, California: Offered Non-Federal Lands, to be Conveyed to the United States. These lands are known as the Manzanar Historic Site and are located within the following general description:

Mount Diablo Meridian, California

T. 14 S., R. 35 E.,
Sec. 9, E½E½SE¼;
Sec. 10, All;
Sec. 11, W½SW¼;
Sec. 14, NW¼;
Sec. 15, N½, N½S½;
Sec. 16, E½E½NE¼, E½NE¼SE¼.

Containing 800 acres more or less.

Selected Federal Lands, to be Patented to the City of Los Angeles:

Mount Diablo Meridian, California

T. 11S., R. 35 E.,
Sec. 30, Lots 1 and 2, E½NW¼, E½SW¼, W½SW¼SE¼;
Sec. 31, Lot 8, W½W½NE¼, E½NW¼, W½SE¼.

Containing 275 acres more or less. Known as the Owens River parcel.

T. 13 S., R. 35 E.,
Sec. 18, S½ of Lot 2 of NW¼, Lot 1 and 2 of SW¼, SW¼NE¼, NW¼SE¼.

Containing 282.81 acres. Known as the Independence parcel.

Additional Federal Lands which could be selected for equal value adjustment. These lands are identified in the Bishop RMP for disposal and are located in:

Mount Diablo Meridian, California

T. 7 S., R. 33 E.,
Sec. 30,
Sec. 31.
T. 13 S., R. 35 E.,
Sec. 29.
T. 14 S., R. 36 E.,
Sec. 31.

SUPPLEMENTAL INFORMATION: Final determination on the exchange and the RMP amendment will made using public comments and an environmental assessment. Public land within any Wilderness Study Area will not be involved in this exchange. The value of the lands to be exchanged will be approximately equal. The conveyance document (patent) for the Federal public lands will include the following reservations to the United States:

1. ''A right-of-way thereon for ditches or canals constructed by the authority of the United States. Act of August 30, 1890 (43 U.S.C. 945).''

2. ''Authorized rights-of-way and other valid third party rights will be recognized. The Proponent will negotiate new easement/permit agreements with third party rights. Patents to selected public lands will be issued subject to any third party rights not successfully negotiated and replaced by a Proponent easement or permit.''

Upon publication of this Notice in the Federal Register, the public lands described above are segregated from all forms of appropriation under the public land laws, including the mineral laws for a period of five years from the date of publication. The segregative effect shall terminate as provided by 43 CFR 2201.1(c).

Detailed information concerning the RMP amendment or the Manzanar exchange is available at the Bishop Resource Area Office, 785 N. Main St. Suite E, Bishop, Ca 93514 or by contacting Larry Primosch at (619) 872–4881.

COMMENTS: On or before March 13, 1996, interested parties may submit valid comments on the Bishop RMP amendment or the Manzanar Exchange to the Bishop Resource Area Manager, 785 N. Main St. Suite E, Bishop, CA 93514.

Dated: March 21, 1996.

Genivieve D. Rasmussen,

Area Manager, Bishop Resource Area.

[FR Doc. 96–7390 Filed 3–27–96; 8:45 am]

BILLING CODE 4310–40–P

[OR–014–96–6350–00; G6–0087]

Notice of Availability

AGENCY: Bureau of Land Management, Klamath Falls Resource Area, Interior.

ACTION: Notice of Availability of the Record of Decision, Resource Management Plan, for the Upper Klamath Basin and Wood River Wetland on the Klamath Falls Resource Area of the Lakeview District, Oregon.

SUMMARY: In accordance with the National Environmental Policy Act of 1969 (40 CFR 150.2), and the Federal Land Policy and Management Act of

1976, (43 CFR part 1610 [g]), the Department of the Interior, Bureau of Land Management, Klamath Falls Resource Area of the Lakeview District provides notice of availability of the Record of Decision (ROD), Approved Resource Management Plan (ARMP), for the Upper Klamath Basin and Wood River Wetland on the Klamath Falls Resource Area of the Lakeview District. The ARMP will provide the framework to guide land and resource allocations and management direction for the next 10 to 20 years on the Wood River property in the Klamath Falls Resource Area of the Lakeview District, including designation of the property as an Area of Critical Environmental Concern. This ARMP supersedes any applicable portions of the existing Lost River and Jackson-Klamath Management Framework Plans and other related documents for managing BLM-administered lands and resources in the subject area. The Klamath Falls Resource Area of the Lakeview District is responsible for management of approximately 3,220 acres of public land located approximately 25 miles north of Klamath Falls. It is bounded on the south by Agency Lake, on the east by the Wood River and associated marsh, on the north-northwest by a dike, and on the west by Sevenmile Creek. It is located in Klamath County, just east of the Cascade Range in southern Oregon.

ADDRESSES: Copies of the ARMP/ROD are available upon request by contacting the Klamath Falls Resource Area of the Lakeview District, Bureau of Land Management, 2795 Anderson Ave., Bldg 25, Klamath Falls, Oregon, 97603. The telephone number is (541) 883–6916. This document has been sent to all those individuals and groups who were on the mailing list for the Upper Klamath Basin and Wood River Wetland Proposed Resource Management Plan/ Final Environmental Impact Statement. The full supporting record for the approved Upper Klamath Basin and Wood River Wetland RMP is also available for inspection in the Klamath Falls Resource Area office during normal operating hours, at the office given above. Copies of the draft and final EISs are also available for inspection in the public room at the BLM Oregon/Washington State Office, 1515 S.W. 5th St., Portland, Oregon 97201; and Klamath County library, at 126 S. 3rd St., Klamath Falls, Oregon during normal operating hours.

FOR FURTHER INFORMATION CONTACT: A. Barron Bail, Area Manager, Klamath Falls Resource Area office, Phone (503) 883–6916.

SUPPLEMENTARY INFORMATION: The Upper Klamath Basin and Wood River Wetland ARMP/ROD is essentially the same as the proposed action in the Upper Klamath Basin and Wood River Wetland Resource Management Plan/Final Environmental Impact Statement (PRMP/FEIS). Virtually no changes to the proposed decisions have been made, however some clarifying language has been made in response to several comment letters, and as a result of ongoing staff review. Four alternatives that encompass a spectrum of realistic management options were considered in the planning process. The final plan is a mixture of the management objectives and actions that, in the opinion of the BLM, best resolve the issues and concerns that originally drove the preparation of the plan.

The overall goal of the plan is to restore the Wood River property to its previous function as a wetland community, within the unalterable constraints (such as water rights, land ownership patterns, and funds). Within that goal, the primary objectives would be to improve water quality and quantity entering Agency Lake from the property; and to restore and enhance wetland habitat, primarily for Lost River and shortnose suckers, and secondarily for other species.

Stream Channel Restoration

To provide a wider riparian area and floodplain along Wood River and Sevenmile Creek that would allow for meandering flow patterns to develop. To encourage channel sinuosity and complexity within BLM administered lands and consistant with Oregon water laws. To not adversely affect water use or rights of other landowners.

Wetland Restoration

To restore the majority of the property to a wetland in proper functioning condition, dominated by a native plant community. Vegetation management could occur using several methods, including but not limited to water level fluctuations, livestock grazing, haying, planting and seeding, prescribed fire, and mechanical or chemical methods.

Special Status Species Habitat

To manage for a diversity of habitats for special status species. Maintain a viable population of spotted frogs on the property. To protect habitats of federally listed or proposed threatened or endangered species; to avoid contributing to the need to list category 1 and 2 federal candidate, state listed, and Bureau sensitive species.

Fish and Wildlife Habitat

To improve habitat conditions for suckers and salmonids; to improve habitat for raptors and neotropical migratory birds; and to optimize waterfowl habitat within the constraints of other resource objectives.

Recreation

To provide opportunities for roaded and semi-primitive recreation experiences (opportunities to have a high degree of interaction with the natural environment, to have moderate challenge and risk and to use outdoor skills). To manage the area for day use only.

Day use is defined as two hours before sunrise and one half-hour after sunset. To manage the area for low to moderate recreation use levels. Recreation use and facilities would be secondary to the overall objectives of wetland restoration and water quality improvement. The area will be closed to off-highway vehicles, except for designated roads and trails and administrative or emergency vehicles, as authorized by the Area Manager. In addition, other parties with right-of-way agreements or easements will have limited access rights.

In addition to the above mentioned day use only restrictions, the following rules apply to the Wood River property: No fires of any kind are permitted. No personal property such as hunting decoys, tents, etc. can remain on the Wood River property during the overnight hours. Pit hunting blinds may not be dug on the property. Jet boats and air boats are prohibited from the existing Wood River marsh and in other wetland areas as they are constructed. Small motorized boats are allowed into the wetland areas between October 1 and January 31.

Any person who fails to comply with this closure restriction order is subject to the penalties provided in 8360.0–7. Violoations are punishable by a fine not to exceed $1,000 and/or imprisonment not to exceed 12 months. This Federal Register notice supercedes any previous notices regarding off-highway vehicle restrictions and other rules applying to the Wood River property.

The ARMP/ROD designates the Wood River property as a new Area of Critical Environmental Concern (ACEC) with the restrictions noted below:

Area name	Acres	Vegetation harvest	ORV use	Mining location	Mineral leasing	Rights-of-way
Wood River	3,220	R	P	R	R	R

NC = No Change from existing situation.
R = Use is allowed but with restrictions.
P = Use is prohibited.

The Wood River property is designated an area of critical environmental concern to protect and restore the areas relevant and important values, which are cultural, fish and wildlife values and natural processes and systems. Livestock grazing is restricted to meet management objectives, as noted above. Mineral leasing is subject to no surface occupancy. The area is closed to off-highway vehicle use .

Special Recreation Management Areas: The plan identifies the Wood River property as a new Special Recreation Management Area.

To ensure that mineral activities do not conflict with other management goals, the lands will be withdrawn from (closed to) settlement, sale, location and entry under the general land laws, including the United States Mining Laws (30 U.S.C. Ch.2,1988), but not the mineral leasing laws, subject to valid and existing rights.

Dated: March 15, 1996.

Edwin J. Singleton,

Lakeview District Manager.

[FR Doc. 96–7509 Filed 3–27–96; 8:45 am]

BILLING CODE 4310–33–P

[CO–956–96–1420–00]

Colorado: Filing of Plats of Survey

March 20, 1996.

The plats of survey of the following described land, will be officially filed in the Colorado State Office, Bureau of Land Management, Lakewood, Colorado, effective 10:00 am., March 20, 1996. All inquiries should be sent to the Colorado State Office, Bureau of Land Management, 2850 Youngfield Street, Lakewood, Colorado 80215.

The plat, in 9 sheets, representing the dependent resurvey of a portion of the west boundary, a portion of the subdivisional lines, and certain mineral claims and portions thereof, and the subdivision of section 7 in Township 1 North, Range 72 W., Sixth Principal Meridian, Group 875, Colorado, was accepted March 1, 1996.

The plat, in two sheets, representing the dependent resurvey of a portion of the subdivisional lines and metes-and-bounds surveys in sections 9 and 17, Township 46 North, Range 10 West, New Mexico Principal Meridian, Group 1125, Colorado, was accepted February 27, 1996.

The plat representing the dependent resurvey of portions of the south boundary and subdivisional lines, the subdivision of section 34, and a metes-and-bounds survey in section 34, Township 46 North, Range 11 West, New Mexico Principal Meridian, Group 1125, Colorado, was accepted February 27, 1996.

The supplemental plat showing amended lottings in section 9, Township 14 South, Range 100 West, Sixth Principal Meridian, Colorado, was accepted March 6, 1996.

The plat representing the dependent resurvey of portions of the south boundary, Township 8 South, Range 85 West, portions of the subdivisional lines and certain lot lines in sections 4, 5, 6, and 10 and the subdivision of certain sections, a metes-and-bounds survey between certain lots in section 6, and an informative traverse along the Little Woody Creek Road in section 10, Township 9 South, Range 85 West, Sixth Principal Meridian, Group 988, Colorado, was accepted October 6, 1994.

These surveys were executed to meet certain administrative needs of this Bureau.

The plat representing the dependent resurvey of portions of the east boundary and subdivisional lines, and the subdivision of certain sections in Township 8 North, Range 64 W., Sixth Principal Meridian, Group 997, Colorado, was accepted March 4, 1996.

This survey was executed to meet certain administrative needs of the U.S. Forest Service, Rocky Mountain Region.

Darryl A. Wilson,

Chief Cadastral Surveyor for Colorado.

[FR Doc. 96–7582 Filed 3–27–96; 8:45 am]

BILLING CODE 4310–JB–P

[NV–930–1430–01; NV–59007]

Notice of Proposed Withdrawal and Opportunity for Public Meeting; Nevada; Correction

AGENCY: Bureau of Land Management, Interior.

ACTION: Notice of correction.

SUMMARY: This notice corrects an error in the land description published in the Federal Register, 59 FR 60998, November 29, 1994, for a proposed withdrawal.

FOR FURTHER INFORMATION CONTACT: Dennis J. Samuelson, BLM Nevada State Office, 850 Harvard Way, P.O. Box 12000, Reno, Nevada 89520, 702–785–6507.

SUPPLEMENTARY INFORMATION: The land description in the Notice of Proposed Withdrawal and Opportunity for Public Meeting; Nevada, 59 FR 60998–60999, November 29, 1994, is corrected as follows:

On page 60999, column 1, line 9 from the bottom of the column, which reads ''S½NE¼NW¼, W½NW¼SW¼,'' is hereby corrected to read ''S½NE¼SW¼, W½NW¼SW¼,''.

Dated: March 19, 1996.

William K. Stowers,

Lands Team Lead.

[FR Doc. 96–7496 Filed 3–27–96; 8:45 am]

BILLING CODE 4310–HC–P

Minerals Management Service

Minerals Management Advisory Board; Outer Continental Shelf (OCS); Scientific Committee (SC); Announcement of Plenary Session

This Notice is issued in accordance with the provisions of the Federal Advisory Committee Act, Pub. L. 92–463, 5 U.S.C., Appendix I, and the Office of Management and Budget Circular A–63, Revised.

The Minerals Management Advisory Board OCS SC will meet in plenary sessions on Wednesday, June 12, and Thursday, June 13, 1996, at the Pontchartrain Hotel, 2031 St. Charles Avenue, New Orleans, Louisiana 70140, telephone (504) 524–0581.

The OCS SC is an outside group of scientists which advises the Director, MMS, on the feasibility, appropriateness, and scientific value of the MMS' OCS Environmental Studies Program (ESP).

Below is a schedule of meetings that will occur.

The SC will meet in plenary session on Wednesday, June 12, and on Thursday, June 13, from 8:30 a.m. to 5 p.m. Discussion will focus on:

- Committee Business and Resolutions.

• Environmental Studies Program Status Review.

• MMS Goals and Objectives.

The meetings are open to the public. Approximately 30 visitors can be accommodated on a first-come-first-served basis at the plenary session.

A copy of the agenda may be requested from the MMS by writing Ms. Phyllis Clark at the address below.

Other inquiries concerning the OCS SC meeting should be addressed to Dr. Ken Turgeon, Executive Secretary to the OCS Scientific Committee, Minerals Management Service, 381 Elden Street, Mail Stop 4310, Herndon, Virginia 22070. He may be reached by telephone on (703) 787–1717.

Dated: March 21, 1996.

Thomas Gernhofer,

Associate Director for Offshore Minerals Management.

[FR Doc. 96–7572 Filed 3–27–96; 8:45 am]

BILLING CODE 4310–MR–M

INTERNATIONAL TRADE COMMISSION

[Investigation No. TA–201–66]

Fresh Tomatoes and Bell Peppers

AGENCY: International Trade Commission.

ACTION: Institution and scheduling of an investigation under section 202 of the Trade Act of 1974 (19 U.S.C. § 2252) (the Act).

SUMMARY: Following receipt of a petition filed on March 11, 1996, on behalf of the Florida Fruit & Vegetable Association, Orlando, FL, the Florida Bell Pepper Growers Exchange, Inc., Orlando, FL, the Florida Commissioner of Agriculture, Tallahassee, FL, the Ad Hoc Group of Florida Tomato Growers and Packers, and individual Florida bell pepper growers, the U.S. International Trade Commission instituted Investigation No. TA–201–66 under section 202 of the Act to determine whether fresh tomatoes and bell peppers, provided for in subheadings 0702.00.20, 0702.00.40, 0702.00.60, and 0709.60.40 of the Harmonized Tariff Schedule of the United States, are being imported into the United States in such increased quantities as to be a substantial cause of serious injury, or the threat thereof, to the domestic industry producing an article like or directly competitive with the imported article.[1]

For further information concerning the conduct of this investigation, hearing procedures, and rules of general application, consult the Commission's Rules of Practice and Procedure, part 201, subparts A through E (19 CFR part 201), and part 206, subparts A and B (19 CFR part 206).

EFFECTIVE DATE: March 11, 1996.

FOR FURTHER INFORMATION CONTACT: Jonathan Seiger (202–205–3183), Office of Investigations, U.S. International Trade Commission, 500 E Street SW., Washington, DC 20436. Hearing-impaired persons can obtain information on this matter by contacting the Commission's TDD terminal on 202–205–1810. Persons with mobility impairments who will need special assistance in gaining access to the Commission should contact the Office of the Secretary at 202–205–2000. General information concerning the Commission may also be obtained by accessing its internet server (http://www.usitc.gov or ftp://ftp.usitc.gov).

SUPPLEMENTARY INFORMATION:

Participation in the investigation and service list.—Persons wishing to participate in the investigation as parties must file an entry of appearance with the Secretary to the Commission, as provided in section 201.11 of the Commission's rules, not later than 21 days after publication of this notice in the Federal Register. The Secretary will prepare a service list containing the names and addresses of all persons, or their representatives, who are parties to this investigation upon the expiration of the period for filing entries of appearance.

Limited disclosure of confidential business information (CBI) under an administrative protective order (APO) and CBI service list.—Pursuant to section 206.17 of the Commission's rules, the Secretary will make CBI gathered in this investigation available to authorized applicants under the APO issued in the investigation, provided that the application is made not later than seven days after the publication of this notice in the Federal Register. A separate service list will be maintained by the Secretary for those parties authorized to receive CBI under the APO.

Hearings on injury and remedy.—The Commission has scheduled separate hearings in connection with the injury and remedy phases of this investigation. The hearing on injury will be held beginning at 9:30 a.m. on June 3, 1996, at the U.S. International Trade Commission Building. In the event that the Commission makes an affirmative injury determination or is equally divided on the question of injury in this investigation, a hearing on the question of remedy will be held beginning at 9:30 a.m. on August 1, 1996. Requests to appear at the hearings should be filed in writing with the Secretary to the Commission on or before May 17, 1996, and July 15, 1996, respectively. All persons desiring to appear at the hearings and make oral presentations should attend prehearing conferences to be held at 9:30 a.m. on May 21, 1996, and July 18, 1996, respectively, at the U.S. International Trade Commission Building. Oral testimony and written materials to be submitted at the hearing are governed by sections 201.6(b)(2) and 201.13(f) of the Commission's rules. Parties are strongly encouraged to submit as early in the investigation as possible any requests to present a portion of their hearing testimony *in camera.*

Written submissions.—Each party is encouraged to submit a prehearing brief to the Commission. The deadline for filing prehearing briefs on injury is May 28, 1996; that for filing prehearing briefs on remedy, including any commitments pursuant to 19 U.S.C. § 2252(a)(6)(B), is July 25, 1996. Parties may also file posthearing briefs. The deadline for filing posthearing briefs on injury is June 10, 1996; that for filing posthearing briefs on remedy is August 8, 1996. In addition, any person who has not entered an appearance as a party to the investigation may submit a written statement of information pertinent to the consideration of injury on or before June 10, 1996, and pertinent to the consideration of remedy on or before August 8, 1996. All written submissions must conform with the provisions of section 201.8 of the Commission's rules; any submissions that contain confidential business information must also conform with the requirements of section 201.6 of the Commission's rules.

In accordance with section 201.16(c) of the Commission's rules, each document filed by a party to the investigation must be served on all other parties to the investigation (as identified by the service list), and a certificate of service must be timely filed. The Secretary will not accept a document for filing without a certificate of service.

Authority: This investigation is being conducted under the authority of section 202 of the Trade Act of 1974; this notice is

[1] For purposes of this investigation, ''fresh tomatoes'' are defined as fresh or chilled tomatoes, including but not limited to the varieties known scientifically as *Lycopersicon esculentum*, *Lycopersicon cerasiforme*, and *Lycopersicon pyriforme*, but excluding tomatoes grown for processing. ''Bell peppers,'' also called sweet peppers, are defined as fresh or chilled peppers belonging to the species *Capsicum annuum var. annuum*, but excluding peppers grown for processing.

published pursuant to section 206.3 of the Commission's rules.

Issued: March 22, 1996.

By order of the Commission.

Donna R. Koehnke,

Secretary.

[FR Doc. 96–7492 Filed 3–27–96; 8:45 am]

BILLING CODE 7020–02–P

[Inv. No. 337–TA–386]

Notice of Investigation

In the Matter of Certain Global Positioning System Coarse Acquisition Code Receivers and Products Containing Same.

AGENCY: International Trade Commission.

ACTION: Institution of investigation pursuant to 19 U.S.C. 1337.

SUMMARY: Notice is hereby given that a complaint was filed with the U.S. International Trade Commission on February 21, 1996, under section 337 of the Tariff Act of 1930, as amended, 19 U.S.C. 1337, on behalf of Trimble Navigation, 645 North Mary Avenue, P.O. Box 3642, Sunnyvale, California 94088–3642. Letters supplementing the complaint were filed on March 5 and March 12, 1996. The complaint, as supplemented, alleges violations of section 337 based on the importation into the United States, the sale for importation, and the sale within the United States after importation of certain global positioning system coarse acquisition code receivers and products containing same by reason of infringement of claims 1 and 7 of U.S. Letters Patent 4,754,465. The complaint further alleges that an industry in the United States exists as required by subsection (a)(2) of section 337.

The complainant requests that the Commission institute an investigation and, after the investigation, issue a permanent exclusion order and a permanent cease and desist order.

ADDRESSES: The complaint, except for any confidential information contained therein, is available for inspection during official business hours (8:45 a.m. to 5:15 p.m.) in the Office of the Secretary, U.S. International Trade Commission, 500 E Street, S.W., Room 112, Washington, D.C. 20436, telephone 202–205–1802. Hearing-impaired individuals are advised that information on this matter can be obtained by contacting the Commission's TDD terminal on 202–205–1810.

FOR FURTHER INFORMATION CONTACT: Kent Stevens, Esq., Office of Unfair Import Investigations, U.S. International Trade Commission, telephone 202–205–2579.

Authority: The authority for institution of this investigation is contained in section 337 of the Tariff Act of 1930, as amended, and in section 210.10 of the Commission's Rules of Practice and Procedure, 19 C.F.R. § 210.10.

Scope of Investigation

Having considered the complaint, the U.S. International Trade Commission, on March 22, 1996, Ordered That—

(1) Pursuant to subsection (b) of section 337 of the Tariff Act of 1930, as amended, an investigation be instituted to determine whether there is a violation of subsection (a)(1)(B) of section 337 in the importation into the United States, the sale for importation, or the sale within the United States after importation of certain global positioning system coarse acquisition code receivers or products containing same by reason of infringement of claims 1 or 7 of U.S. Letters Patent 4,754,465, and whether there exists an industry in the United States as required by subsection (a)(2) of section 337.

(2) For the purpose of the investigation so instituted, the following are hereby named as parties upon which this notice of investigation shall be served:

(a) The complainant is—Trimble Navigation, 645 North Mary Avenue, P.O. Box 3642, Sunnyvale, California 94088–3642.

(b) The respondent is the following company alleged to be in violation of section 337, and is the party upon which the complaint is to be served: NovAtel Communications Ltd., 1020 64th Avenue N.E., Calgary, Alberta, Canada T3J 1S1.

(c) Kent Stevens, Esq., Office of Unfair Import Investigations, U.S. International Trade Commission, 500 E Street, SW., Room 401–L, Washington, DC 20436, who shall be the Commission investigative attorney, party to this investigation; and

(3) For the investigation so instituted, the Honorable Sidney Harris is designated as the presiding administrative law judge.

Responses to the complaint and the notice of investigation must be submitted by the named respondent in accordance with section 210.13 of the Commission's Rules of Practice and Procedure. 19 C.F.R. § 210.13. Pursuant to sections 201.16(d) and 210.13(a) of the Commission's Rules, 19 C.F.R. §§ 201.16(d) and 210.13(a), such responses will be considered by the Commission if received not later than 20 days after the date of service by the Commission of the complaint and the notice of investigation. Extensions of time for submitting responses to the complaint and notice will not be granted unless good cause therefore is shown.

Failure of the respondent to file a timely response to each allegation in the complaint and in this notice may be deemed to constitute a waiver of the right to appear and contest the allegations of the complaint and this notice, and to authorize the administrative law judge and the Commission, without further notice to the respondent, to find the facts to be as alleged in the complaint and this notice and to enter both an initial determination and a final determination containing such findings, and may result in the issuance of a limited exclusion order or a cease and desist order or both directed against the respondent.

Issued: March 25, 1996.

By order of the Commission.

Donna R. Koehnke,

Secretary.

[FR Doc. 96–7570 Filed 3–27–96; 8:45 am]

BILLING CODE 7020–02–P

DEPARTMENT OF JUSTICE

Drug Enforcement Administration

[Docket No. 95–7]

Stanley Karpo, D.P.M.; Revocation of Registration

On September 19, 1994, the Deputy Assistant Administrator, Office of Diversion Control, (then titled Director, Office of Diversion Control), Drug Enforcement Administration (DEA), issued an Order to Show Cause to Stanley Karpo, D.P.M., (Respondent) of Norristown, Pennsylvania, notifying him of an opportunity to show cause as to why DEA should not revoke his DEA Certificate of Registration, AK5172515, under 21 U.S.C. 824(a), and deny any pending applications for renewal of such registration as a practitioner under 21 U.S.C. 823(f), as being inconsistent with the public interest. Specifically, in relevant part, the Order to Show Cause alleged that the Respondent had been excluded from participation in a program pursuant to 42 U.S.C. 1320a–7(a), as evidenced by, but not limited to, the following:

(a) Between 1986 and 1989, [the Respondent] submitted 219 fraudulent claims for $32,317.00, to Medicare for medical services not provided.

(b) On July 22, 1991, in the Court of Common Pleas for Montgomery County, Pennsylvania, [the Respondent] pled guilty to 23 counts of Medicaid fraud, and two counts of theft by deception. On October 15, 1991, [the Respondent was] sentenced to a period

of incarceration of between 8–23 months; court costs and fines; two years supervised probation; and ordered to pay restitution to the Pennsylvania Department of Public Welfare.

(c) On March 6, 1992, [the Respondent was] notified by the Department of Health and Human Services of [his] eight-year mandatory exclusion from participation in the Medicare program pursuant to 42 U.S.C. 1320a–7(a).

While this matter was pending, the Respondent filed a request for modification of his DEA Certificate of Registration to reflect his change of address from Norristown, Pennsylvania, to Hollywood, Florida. On November 3, 1994, the Deputy Assistant Administrator, Office of Diversion Control, issued another Order to Show Cause to the Respondent at his Hollywood, Florida address, notifying him of an opportunity to show cause as to why DEA should not only revoke his DEA Certificate of Registration as stated in the earlier show cause order, but also to deny his request for modification under 21 U.S.C. 823(f), for the same reasons as stated in the earlier show cause order.

By letter dated November 25, 1994, the Respondent, representing himself, requested a hearing, and following prehearing procedures, a hearing was scheduled before Judge Paul A. Tenney, for October 11, 1995. However, by letter dated October 5, 1995, the Respondent notified Judge Tenney that he had elected not to contest this matter. By order dated October 10, 1995, Judge Tenney determined that the Respondent's letter was a withdrawal of his request for a hearing, and he cancelled the hearing scheduled for October 11. Judge Tenney also recommended that this case ''be disposed of by a decision based upon the investigative record.'' By letter dated October 18, 1995, Judge Tenney transmitted the record of these proceedings to the Deputy Administrator.

The Deputy Administrator agrees with Judge Tenney's determination that the Respondent's letter dated October 5, 1995, was a withdrawal of his request for a hearing. Accordingly, the Deputy Administrator now enters his final order in this matter without a hearing and based on the investigative file and the prehearing matters submitted by the parties pursuant to 21 CFR 1301.54(e) and 1301.57.

The Deputy Administrator finds that the parties have stipulated before Judge Tenney, and nothing filed by the Respondent indicates his intention to withdraw from this stipulation, as follows:

(1) On July 22, 1991, in the Court of Common Pleas for Montgomery County, Pennsylvania, [the] Respondent pled guilty to twenty-three counts of Medicaid fraud and two counts of theft by deception. On October 15, 1991, [the] Respondent was sentenced to a period of incarceration between 8–23 months; court costs and fines; two years supervised probation; and ordered to pay restitution to the Pennsylvania Department of Public Welfare.

(2) On [March 6, 1992, the] Respondent was notified by the Department of Health and Human Services of his eight-year exclusion from participation in the Medicare Program pursuant to 42 U.S.C. [1320]a–7a. This action is currently under appeal.

Although the parties stipulated that the Respondent appealed the Medicare exclusion determination, neither party has submitted any evidence demonstrating that the Medicare exclusion has been revoked or otherwise altered from the original determination.

The investigate file contains a report indicating that during the Medicare fraud investigation, investigators from the Pennsylvania Attorney General's Medicaid Fraud Section interviewed a number of the Respondent's ex-employees, who had related that the Respondent had treated patients while under the influence of drugs. One of the ex-employees stated that she had seen the Respondent take excessive amounts of Valium during office hours. Valium is a brand name for a product containing diazepam, a Schedule IV controlled substance. Another ex-employee related that the Respondent had inhaled cocaine at his office desk. A number of the Respondent's patients also indicated that they believed he was under the influence of some drug when he treated them.

On April 16, 1993, pursuant to a consent agreement between the Respondent and the State's prosecuting attorney, the Commonwealth of Pennsylvania Department of State Bureau of Professional and Occupational Affairs (Bureau) ordered the Respondent's license to practice podiatry suspended for a period of one year. However, this suspension was stayed in favor of a period of active suspension for twenty-one days, and a three-year period of probation, with specified terms and conditions. One of the terms of probation was that the Respondent remain enrolled in, and successfully participate in, ''the Impaired Professional Program for the duration of his probation, unless earlier released from participation by the Impaired Professional Program Consultant.'' In his prehearing statement, the Respondent indicated that he was participating in such a program, which included weekly meetings, random monthly substance abuse laboratory screenings, and psychological evaluations.

Pursuant to 21 U.S.C. 823(f) and 824(a)(4), the Deputy Administrator may revoke a DEA Certificate of Registration and deny any pending application for such registration, if he determines that the continued registration would be inconsistent with the public interest. Section 823(f) requires that the following factors be considered:

(1) The recommendation of the appropriate State licensing board or professional disciplinary authority.

(2) The applicant's experience in dispensing, or conducting research with respect to controlled substances.

(3) The applicant's conviction record under Federal or State laws relating to the manufacture, distribution, or dispensing of controlled substances.

(4) Compliance with applicable State, Federal, or local laws relating to contolled substances.

(5) Such other conduct which may threaten the public health or safety.

These factors are to be considered in the disjunctive; the Deputy Administrator may rely on any one or a combination of factors and may give each factor the weight he deems appropriate in determining whether a registration should be revoked or a pending application for registration denied. See Henry J. Schwarz, Jr., M.D., Docket No. 88–42, 54 FR 16422 (1989).

In addition, 21 U.S.C. 824(a)(5) specifies that a DEA registration may be revoked or suspended if the registrant ''has been excluded * * * from participation in a program pursuant to [42 U.S.C. 1320a–7(a)].'' Here, the record demonstrates that the Respondent has been so excluded. Although the Respondent asserted that this decision was under appeal, nothing was presented reversing or otherwise altering his Medicare program exclusion. The DEA has previously determined that such an exclusion constitutes grounds for revoking a Respondent's DEA Certificate of Registration. See Richard M. Koenig, M.D., Docket No. 94–32, 60 FR 65069 (1995); Joseph A. Zadrozny, M.D., 60 FR 14304 (1995).

Next, as to the public interest issue, factors one and five are relevant in determining whether the Respondent's continued registration would be inconsistent with the public interest. Specifically, as to factor one, ''[t]he recommendation of the appropriate state licensing board,'' in April of 1993, the Bureau, pursuant to a consent agreement, actively suspended the Respondent's license to practice podiatry for twenty-one days and placed

it on probation for three years. The Bureau ordered the Respondent to participate in an Impaired Professional Program for the duration of his probation. Although the facts concerning the Respondent's alleged acts of substance abuse are not adequately developed for specific findings based upon the record before the Deputy Administrator, it is significant that the Bureau, after reviewing the investigative record before it, ordered the Respondent to participate in an Impaired Professional Program for the duration of the Respondent's three-year probation.

Further, as to factor five, ''[s]uch other conduct which may threaten the public health or safety,'' the Respondent's conduct of submitting false invoices placed into question his trustworthiness and credibility. Such lack of trustworthiness causes concern as to the Respondent's future conduct if entrusted with protecting the public interest in administering controlled substances.

Except for the Respondent's general statement in his prehearing submission that he continues to participate in the Impaired Professional Program, the Respondent has not submitted any other information of his rehabilitative efforts. Given the egregious nature of the Respondent's conduct in intentionally filing false documents with the State and his resulting exclusion from the Medicare Program, the Deputy Administrator finds that the public interest is best served by revoking the Respondent's DEA Certificate of Registration and denying any pending registration application at the present time. *See Sokoloff* v. *Saxbe,* 501 F.2d 571, 576 (2d Cir. 1974) (stating that ''permanent revocation'' of a DEA Certificate of Registration may be ''unduly harsh'').

Accordingly, the Deputy Administrator of the Drug Enforcement Administration, pursuant to the authority vested in him by 21 U.S.C. 823 and 824, and 28 CFR 0.100(b) and 0.104, hereby orders that DEA Certificate of Registration AK5172515, issued to Stanley Karpo, D.P.M., be, and it hereby is, revoked, and any pending application, or request for modification of this registration, submitted by the Respondent is denied. This order is effective April 29, 1996.

Dated March 22, 1996.

Stephen H. Greene,

Deputy Administrator.

[FR Doc. 96–7498 Filed 3–27–96; 8:45 am]

BILLING CODE 4410–09–M

[Docket No. 95–2]

John Porter Richards, D.O.; Grant of Application

On October 4, 1994, the Deputy Assistant Administrator, Office of Diversion Control, Drug Enforcement Administration (DEA), issued an Order to Show Cause to John Porter Richards, D.O., (Respondent) of Elkview, West Virginia, notifying him of an opportunity to show cause as to why DEA should not deny his application for registration as a practitioner under 21 U.S.C. 823(f), as being inconsistent with the public interest. Specifically, the Order to Show Cause alleged that:

(1) In 1984, the Virginia State Police conducted a raid on a sailing vessel docked in Lancaster County, Virginia, and seized six tons of marijuana, a Schedule I controlled substance. The Respondent was subsequently indicted for conspiracy to distribute, and with distribution of marijuana, with respect to this seizure.

(2) On or about July 18, 1985, in the Circuit Court for Lancaster County, Virginia, the Respondent was convicted of conspiracy to distribute marijuana and possession with intent to distribute more than five pounds of marijuana, both felony offenses related to controlled substances. Upon conviction, the Respondent was sentenced to 30 years imprisonment, 20 years of which were suspended.

(3) As a result of the criminal conviction, the Ohio State Board of Medicine revoked the Respondent's license to practice osteopathic medicine in the state, on or about April 9 1986.

On October 21, 1994, the Respondent, through counsel, filed a timely request for a hearing, and following prehearing procedures, a hearing was held in Arlington, Virginia, on February 16, 1995, before Administrative Law Judge Mary Ellen Bittner. At the hearing, both parties called witnesses to testify and introduced documentary evidence, and after the hearing, counsel for both sides submitted proposed findings of fact, conclusions of law and argument. On September 6, 1995, Judge Bittner issued her Opinion and Recommended Ruling, recommending that the Respondent's application for registration be granted. Neither party filed exceptions to her decision, and on October 6, 1995, Judge Bittner transmitted the record of these proceedings to the Deputy Administrator.

The Deputy Administrator has considered the record in its entirety, and pursuant to 21 CFR 1316.67, hereby issues his final order based upon findings of fact and conclusions of law as hereinafter set forth. The Deputy Administrator adopts, in full, the Opinion and Recommended Ruling, Findings of Fact, Conclusions of Law, and Decision of the Administrative Law Judge, and his adoption is in no manner diminished by any recitation of facts, issues and conclusions herein, or of any failure to mention a matter of fact or law.

The Deputy Administrator finds that, on May 23, 1993, the Respondent completed an application for a DEA Certificate of Registration as a practitioner to handle controlled substances. On the application, the Respondent disclosed that in 1985 he had received a felony conviction related to marijuana, that in 1986, his medical license in the State of Ohio had been revoked due to that conviction, and that his prior DEA registration had had no action taken against it. The Respondent testified before Judge Bittner that he had let his prior DEA registration expire.

A DEA inquiry disclosed that on July 18, 1985, the Respondent was convicted, after a jury trial, of one count of possession with intent to distribute approximately 12,000 pounds of marijuana, and one count of conspiracy to distribute the same quantity of marijuana. The Respondent was sentenced to (1) thirty years confinement, with twenty years suspended; (20 supervised probation for three years after his release from confinement; and (3) payment of a $5,000.00 fine. Further, by order dated April 16, 1986, the State Medical Board of Ohio revoked the Respondent's license to practice osteopathic medicine and surgery in that state as a result of this felony conviction.

On April 15, 1988, the State of West Virginia Board of Osteopathy (Board) granted the Respondent a probationary license, with stipulations to include serving a five-year period of probation and a required reporting provision. By letter dated March 19, 1993, the Board removed the restrictions from the Respondent's license to practice and issued him an unrestricted license, effective April 15, 1993. Further, the Respondent submitted a letter from the Board dated December 12, 1994, recommending that the Respondent be granted a DEA Certificate of Registration.

The Respondent testified before Judge Bittner, stating that he had graduated from the Philadelphia College of Osteopathic Medicine, is a diplomat of the National Board of Examiners, and is Board certified in family practice. He stated that he maintains a solo practice in Elkview, West Virginia, a rural community approximately fifteen miles

from Charleston, that there are more than 6,000 patients in his practice, and that he treats a large number of poor patients, about forty percent of which receive Medicare and/or Medicaid benefits. The Respondent testified that he did not have hospital privileges, for he had been told that he needed a DEA Certificate of Registration to qualify for such privileges in his local hospitals.

When asked on cross-examination whether, consistent with his not guilty plea, he continued to maintain that he had not committed the crimes for which he had been convicted, the Respondent testified, ''I accept my conviction,'' and when asked to what extent he did so, he replied, ''In its completeness.'' He also stated that this conviction was his first, that he had no subsequent convictions, and that he did not believe that he would ever again commit any crime ''involving the drug laws.'' The Respondent testified that in October of 1990, he had satisfactorily completed his court-ordered probation.

The Respondent submitted an affidavit from Robert R. Merhige, Jr. The parties stipulated that ''Robert R. Merhige, Jr.[.] is a Senior U.S. District Judge for the Eastern District of Virginia, at Richmond.'' Judge Merhige wrote that he was aware of the Respondent's prior conviction, that he had been told it was his first conviction, and that he had had contact with the Respondent over the years since his conviction. Judge Merhige also wrote that, based upon his association with the Respondent, ''I am of the option that he is unlikely to violate the law, and has the capacity and intention to conduct himself as a worthy citizen,'' that he was ''of the sincere belief that [the Respondent would] conduct himself appropriately and [would] not be a threat to the public health and safety,'' and ''I believe him to be a person worthy of the privilege of prescribing controlled substances pursuant to a valid DEA license.''

The Respondent also submitted documents detailing the barriers he faced as a result of his lack of a DEA Certificate of Registration. Specifically, he submitted documents disclosing his inability to participate in managed health care programs, difficulties in obtaining liability insurance, as well as evidence of the economic decline of his practice.

Pursuant to 21 U.S.C. 823(f), the Deputy Administrator may deny an application for registration as practitioner, if he determines that granting the registration would be inconsistent with the public interest. Section 823(f) requires that the following factors be considered:

(1) The recommendation of the appropriate State licensing board or professional disciplinary authority.

(2) The applicant's experience in dispensing, or conducting research with respect to controlled substances.

(3) The applicant's conviction record under Federal or State laws relating to the manufacture, distribution, or dispensing of controlled substances.

(4) Compliance with applicable State, Federal, or local laws relating to controlled substances.

(5) Such other conduct which may threaten the public health or safety.

These factors are to be considered in the disjunctive; the Deputy Administrator may rely on any one or a combination of factors and may give each factor the weight he deems appropriate in determining whether a registration should be revoked or an application for registration denies. See Henry J. Schwarz, Jr., M.D., Docket No. 88–42, 54 FR 16422 (1989).

In this case, the Deputy Administrator agrees with Judge Bittner, finding that factors one, three, four, and five are relevant in determining whether the Respondent's registration would be inconsistent with the public interest. As to factor one, ''recommendation of the appropriate State licensing board,'' it is significant that, as a result of his felony conviction related to controlled substances, the Respondent's medical license was revoked by the Ohio State Board of Medicine in 1986. Further, in 1988, when the State of West Virginia Board of Osteopathy granted the Respondent a license, it chose to grant a probationary license with reporting requirements. However, also significant is the fact that in 1993, the Board issued the Respondent an unrestricted license to practice medicine. Further, the Board also supports the Respondent's application for a DEA Certificate of Registration, as evidenced by its letter of December 12, 1994.

As to factor three, the Respondent's ''conviction record under Federal or State laws relating to the * * * distribution * * * of controlled substances'' and factor four, the Respondent's ''[c]ompliance with applicable State, Federal, or local laws relating to controlled substances,'' It is undisputed that the Respondent received a felony conviction for the unlawful possession with intent to distribute, and for conspiracy to distribute, 12,000 pounds of marijuana, a Schedule I controlled substance, in violation of State law. As for factor five, ''[s]uch other conduct which may threaten the public health or safety,'' there is no dispute that on the night of the incident which resulted in the Respondent's conviction, he fled the scene of the crime, thereby avoiding law enforcement officials. Thus, the Deputy Administrator agrees with Judge Bittner's conclusion that the ''Respondent's past misconduct constitutes sufficient grounds to deny his application for DEA registration.''

However, the Deputy Administrator also agrees that factors exist which support granting the Respondent's application. First, the Respondent's criminal conduct occurred more than ten years ago. As the Deputy Administrator has previously determined, ''[t]he paramount issue is not how much time has elapsed since [the Respondent's] unlawful conduct, but rather, whether during that time [the] Respondent has learned from past mistakes and has demonstrated that he would handle controlled substances properly if entrusted with DEA registration.'' *Leonardo V. Lopez, M.D.,* 54 FR 36915 (1989). Even though it has been previously found that time, alone, is not dispositive in such situations, it is certainly an appropriate factor to be considered. See *Norman Alpert, M.D.,* 58 FR 67420, 67421 (1993), citing *Thomas H. McCarthy, D.O.,* 54 FR 20936 (DEA 1989), affirmed, *Thomas H. McCarthy, D.O.* v. *Drug Enforcement Administration,* No. 89–3496 (6th Cir. Apr. 5, 1990) (unpublished opinion).

Next, there is no evidence or contention that the Respondent has ever been involved in any other criminal activity. Also, Judge Bittner noted that the Respondent had expressed remorse for his prior misconduct and that ''there is no indication that those expressions of remorse are not genuine.'' The Respondent also testified before Judge Bittner that he certainly did not intend to commit any crime ''involving the drug laws'' in the future. His convictions were corroborated by Judge Merhige's affidavit containing his opinion that the Respondent was ''unlikely to violate the law.'' Further, since the Respondent's release from confinement, he had taken positive steps to improve his professional credentials by becoming Board certified in family practice.

The Deputy Administrator strongly endorses Judge Bittner's observation, that the ''Respondent's involvement in smuggling marijuana was egregious criminal behavior.'' Without condoning such behavior, however, the Deputy Administrator also agrees that granting the Respondent's application for a DEA Certificate of Registration would be consistent with the public's interest at this time and in this case. The Deputy Administrator also finds that the public's interest, as well as the interest

of the Respondent, will be served better by making this order effective upon the date of publication in the Federal Register, rather than thirty days thereafter.

Accordingly, the Deputy Administrator of the Drug Enforcement Administration, pursuant to the authority vested in him by 21 U.S.C. 823, and 28 CFR 0.100(b) and 0.104, hereby orders that the pending application for a DEA Certificate of Registration of John Porter Richards, D.O., be, and it hereby is, approved. This order is effective upon publication in the Federal Register.

Dated: March 22, 1996.

Stephen H. Greene,

Deputy Administrator.

[FR Doc. 96–7499 Filed 3–27–96; 8:45 am]

BILLING CODE 4410–09–M

DEPARTMENT OF LABOR

Women's Bureau; Proposed Collection; Comment Request

ACTION: Notice.

SUMMARY: The Department of Labor, as part of its continuing effort to reduce paperwork and respondent burden conducts a preclearance consultation program to provide the general public and Federal agencies with an opportunity to comment on proposed and/or continuing collections of information in accordance with the Paperwork Reduction Act of 1995 (PRA95) [44 U.S.C. 3506(c)(2)(A)]. This program helps to ensure that requested data can be provided in the desired format, reporting burden (time and financial resources) is minimized, collection instruments are clearly understood, and the impact of collection requirements on respondents can be properly assessed. Currently, the Women's Bureau is soliciting comments concerning the proposed new collection of information on the fair pay issue for implementation of the Fair Pay Information Clearinghouse. A copy of the ICR can be obtained by contacting the office listed below in the addressee section of this notice.

DATES: Written comments must be submitted to the office listed in the addressee section below on or before May 28, 1996. The Department of Labor is particularly interested in comments which:

* Evaluate whether the proposed collection of information is necessary for the proper performance of the functions of the agency, including whether the information will have practical utility;

* Evaluate the accuracy of the agency's estimate of the burden of the proposed collection of information, including the validity of the methodology and assumptions used;

* Enhance the quality, utility, and clarify of the information to be collected; and

* Minimize the burden of the collection of information on those who are to respond, including through the use of appropriate automated, electronic, mechanical, or other technological collection techniques or other forms of information technology, e.g., permitting electronic submissions of responses.

ADDRESSES: Josephine Gomez on (202) 219–6631; fax number (202) 219–5529; Internet address Jgomez@WB.gov or Arline Easley on (202) 219–6601; fax number (202) 219–5529; Internet address Aeasley@WB.gov; Women's Bureau, U.S. Department of Labor, Room S–3317, 200 Constitution Avenue, NW, Washington, DC 20210.

SUPPLEMENTARY INFORMATION:

I. Background

This information is needed because the Administration has made implementation of the Fair Pay Information Clearinghouse a priority for the Women's Bureau for Fiscal Year 1996. The Clearinghouse is a direct response to working women's views, solicited by the Working Women Count! initiative begun in 1994, starting with a voluntary customer satisfaction survey and a scientific random sample. In both the popular survey and the scientific sample, working women clearly conveyed that they do not receive the level of pay and benefits needed to support themselves and their families. Respondents said that ''improving pay scales * * *'' was one of their highest priorities for workplace change. The Fair Pay Information Clearinghouse will assist employees and employers who want to improve wage-setting practices. The Clearinghouse will provide technical assistance to employees, employers and organizations on successful efforts to identify and remove sex and race discrimination in wage setting policies. In addition to providing wage and occupational data, which will be obtained from resources such as the Department's Bureau of Labor Statistics (BLS), the Clearinghouse will also offer profiles of employers that have implemented pay adjustments based on pay equity studies, as well as offering organizational resources to contact for a variety of information on fair pay. Those who contact the Clearinghouse will learn about existing approaches to paying workers for the valuable work they do, regardless of whether or not that work has traditionally been performed by women and by people of color. Since the majority of women still work in traditionally female jobs, the Clearinghouse will provide these workers and their employers helpful tools to secure equal access to fair pay.

II. Current Actions

Solicitors and/or Commissions on Women of 50 states, including local jurisdictions and school districts will be asked to respond to the items appearing on OMB approved form ''Organizations Working on Fair Pay Issues''. Information on the methodology used to implement fair pay adjustments will be gathered over the telephone utilizing OMB approved dialogue. Approximately 20 state entities that have made fair pay adjustments will be asked to provide descriptions of the methodologies used in distributing fair pay adjustments; these data should already be codified and the agencies simply need to send a copy of the descriptions that have been used. Ten researchers working in the field of fair pay will likely be requested to provide manuscripts and publications on the subject. Respondents have the option of transmitting their information electronically. Internet addresses and facsimile numbers are being provided for every aspect of this information collection.

Type of Review: New.

Agency: Women's Bureau.

Title: The Fair Pay Information Clearinghouse Information Collection.

Affected Public: Likely respondents are solicitors and/or Commissions on Women of 50 states, including local jurisdictions and school districts; Approximately 20 state entities that have made fair pay adjustments, and ten researchers working in the field of fair pay will likely be requested to provide manuscripts and publications on the subject.

Total Respondents: Approximately 180 respondents.

Frequency: Annual.

Total Responses: 180.

Average Time per Response: 9 hours.

Estimated Total Burden Hours: 1,600.

Total Burden Cost: (capital/startup): $19,160 (startup only).

Total Burden Cost: (operating/maintaining): $19,160 for each subsequent year (maintenance only).

Comments submitted in response to this comment request will be summarized and/or included in the request for Office of Management and Budget approval of the information

collection request; they will also become a matter of public record.

Dated: March 22, 1996.

Ida L. Castro,

Acting Director.

[FR Doc. 96–7569 Filed 3–27–96; 8:45 am]

BILLING CODE 4510–23–M

Office of the Secretary

Submission for OMB Emergency Review; Comment Request

March 22, 1996.

The Department of Labor has submitted the following (see below) information collection request (ICR), utilizing emergency review procedures, to the Office of Management and Budget (OMB) for review and clearance in accordance with the Paperwork Reduction Act of 1995 (Pub. L. 104–13, 44 U.S.C. Chapter 35). OMB approval has been requested by April 5, 1996. A copy of this ICR, with applicable supporting documentation, may be obtained by calling the Department of Labor Acting Departmental Clearance Officer, Theresa M. O'Malley (202) 219–5095).

Comments and questions about the ICR listed below should be forwarded to the Office of Information and Regulatory Affairs, Attn: OMB Desk Officer for the Women's Bureau, Office of Management and Budget, Room 10235, Washington, DC 20503, (202) 395–7316.

The Office of Management and Budget is particularly interested in comments which:

- Evaluate whether the proposed collection of information is necessary for the proper performance of the functions of the agency, including whether the information will have practical utility;
- Evaluate the accuracy of the agency's estimate of the burden of the proposed collection of information, including validity of the methodology and assumptions used;
- Enhance the quality, utility, and clarity of the information to be collected; and
- Minimize the burden of the collection of information on those who are to respond, including through the use of appropriate automated, electronic, mechanical, or other technological collection techniques or other forms of information technology, e.g., permitting electronic submissions of responses.

Agency: Women's Bureau.

Title: The Fair Pay Information Clearinghouse Information Collection.

Frequency of Response: Annually.

Affected Public: Solicitors and/or Commissions on Women of 50 states, including local jurisdictions and school districts; approximately 20 state entities that have made fair pay adjustments, and ten researchers working in the field of fair pay.

Number of Respondents: Approximately 180 respondents.

Estimated Time Per Respondent: 9 hours.

Total Burden Hours: 1,600.

Total Burden Cost (Startup): $19,160.

Total Burden Cost (Maintenance): $19,160 for each subsequent year.

Description: In May 1994, the United States Department of Labor's Women's Bureau launched an unprecedented nationwide initiative—Working Women Count! The Working Women Count! questionnaire asked working women what they liked and disliked about their jobs, and what they would like to change. More than a quarter of a million women from all 50 states answered: ''Improving pay scales * * *'' was one of their highest priorities for workplace change, along with the way women's work is valued and recognized. They clearly conveyed that they do not receive the level of pay and benefits needed to support themselves and their families. When 75% of working women are paid $25,000 a year or less and a majority of women workers still work in traditionally female, and often low-paid jobs, women have a difficult time providing adequately for their own and their families' needs.

At a White House event in October 1994 to highlight the results of the Working Women Count! survey, President Clinton directed Secretary Robert Reich and the Director of the Women's Bureau to develop a set of proposals to address the concerns expressed in Working Women Count! On April 10, 1995, President Clinton accepted the Women's Bureau recommendations on the Federal government's role in making work better for women. The Fair Pay Information Clearinghouse is an integral component of the Bureau's recommendations to assist employees and employers who want to improve wage-setting practices by valuing the work done by a majority of women workers in the United States.

The Clearinghouse's computerized database information will provide technical assistance on successful efforts to identify and remove sex and race discrimination in wage setting policies. Clearinghouse customers will include employees, employers, and organizations. Technical assistance will be available to customers contacting the Clearinghouse during normal business hours and access to the Clearinghouse database will be available on a 24-hour basis by means of the Internet.

Theresa M. O'Malley,

Acting Departmental Clearance Officer.

[FR Doc. 96–7568 Filed 3–27–96; 8:45 am]

BILLING CODE 4510–23–M

Mine Safety and Health Administration

Petitions for Modification

The following parties have filed petitions to modify the application of mandatory safety standards under section 101(c) of the Federal Mine Safety and Health Act of 1977.

1. Energy West Mining Company

[Docket No. M–96–01–C]

Energy West Mining Company, 15 North Main Street, P.O. Box 310, Huntington, Utah 84528 has filed a petition to modify the application of 30 CFR 75.326 (now 75.350) (air courses and belt haulage entries) to its Deer Creek Mine (I.D. No. 42–00121) located in Emery County, Utah. The petitioner requests amendments to MSHA's Proposed Decision and Order (PDO) regarding its Petition for Modification, Case No. 86–MSA–3, docket number M–85–127–C, proposal to modify application of the existing standards to conduct longwall mining with two entries in longwall panels under deep cover. The petitioner requests changes to two requirements of the previous decision and order due to changes in circumstances at its Deer Creek Mine. The petitioner requests that paragraph III.(c)(4) be amended to strike the first two clauses of the paragraph, so that the paragraph begins with the phrase ''All diesel powered equipment operated on any two-entry longwall development or two-entry longwall panel,'' and to replace the period at the end of the paragraph with a comma and add at the end of the paragraph the phrase: ''with the exception of the following diesel-powered equipment approved under 30 CFR part 32 (Schedule 24): ambulances used in emergency situations, mantrips, and other vehicles used to transport personnel to and from work areas.'' The petitioner asserts that this amendment would provide a more reliable and safer means of transporting personnel to and from work areas. In paragraph III.(o) of the PDO, the petitioner requests that the word ''on'' be removed from the sentence ''Also, during longwall retreat mining in the two-entry panel, a rock dusting unit shall be installed on the last tailgate shield'', and substitute in the words ''at or near.'' The petitioner asserts that this change would permit the use of other rock dusting systems,

such a bulk dusters, installed in the tailgate return entries which were not in use (or available) when the decision and order was issued. In addition, the petitioner asserts that the granting of this petition to amend would provide alternate means of ensuring the safety of the miners based on developments in mining technology at the Deer Creek Mine since the previous decision and order was issued.

2. Ohio County Coal Company, Inc.

[Docket No. M–96–02–C]

Ohio County Coal Company, Inc., 19050 Highway 1078 South, Henderson, Kentucky 42420 has filed a petition to modify the application of 30 CFR 75.901(a) (protection of low- and medium-voltage three-phase circuits used underground) to its Freedom Mine (I.D. No. 15–17587) located in Hopkins County, Kentucky. The petitioner proposes to operate the Diesel Powered Generator without an earth referenced ground. The petitioner states that attaching a grounding conductor to the earth reference ground system reduces the mobility and effectiveness of the unit. The petitioner has listed specific stipulations in its petition to support its alternative method for operating the generator. In addition, the petitioner asserts that the proposed alternative method would provide at least the same measure of protection as would the mandatory standard.

3. D.R. Price Engineering and Land Surveying, Inc., PC

[Docket No. M–96–03–C]

D. R. Price Engineering and Land Surveying, Inc., PC, an MSHA Contractor (I.D. No. NAW), P.O. Box 270, Swords Creek, Virginia 24649 has filed a petition to modify the application of 30 CFR 75.501–2(a)(2) (permissible electric face equipment) for Dominion Coal Corporation, P.O. Box 70, Vansant, Virginia 24656 for its Dominion No. 7 Mine (I.D. No. 44–06499) VA MI No. 13963AA; its Dominion No. 8 Mine (I.D. No. 44–06555) VA MI No. 14024AA; its Dominion No. 16 Mine (I.D. No. 44–06643) VA MI No. 14160AA; its Dominion No. 18 Mine (I.D. No. 44–06577) VA MI No. 14045AA; its Dominion No. 21 Mine (I.D. No. 44–06644) VA MI No. 14161AA; and its Dominion No. 22 Mine (I.D. No. 44–06645) VA MI 14162AA; the Chad Coal Corporation, P.O. Box 890, Oakwood, Virginia 24631 for its Mine No. 4 (I.D. No. 44–06592) VA MI No. 14061AB; and its Mine No. 6 (I.D. No 44–06709) VA MI No. 14247AC all located in Buchanan County, Virginia; the Mackie J. Coal Company, Inc., Rt. 2, Box 530, Grundy, Virginia 24614 for its Mine No. 4 (I.D. No. 44–06051) VA MI No. 12681AD; the Classic Coal Corporation, P.O. Box 1025, Grundy, Virginia for its Mine No. 1 (I.D. No. 44–06195) VA MI No. 13256AB; the Blake Coal Company, Rt. 1, Box 566, Swords Creek, Virginia 24649 for its Mine No. 2 (I.D. No. 44–06486) VA MI No. 04940AB; and its Mine No. 3 (I.D. No. 44–06748) VA MI 14293AC; the Red Baron, Inc., P.O. Box 295, Swords Creek, Virginia 24649 for its Mine No. 1 (I.D. No. 44–06719) VA MI No. 14259AD; and its Mine No. 2 (I.D. No. 44–06779) VA MI No. 14301AC; the Nufac Mining, Inc., for its Mine No. 2 (I.D. No. 44–06758) VA MI No. 14313AB; the East Star Mining, Inc., P.O. Box 189, Swords Creek, Virginia 24649 for its Mine No. 2 (I.D. No. 44–06613) VA MI No. 14100AB; the Rat Contractors, Inc., P.O. Box 768, Grundy, Virginia 24614 for its Mine No. 2 (I.D. No. 44–06793) VA MI No. 14353AB; the Lick Branch Mining, Inc., Rt. 2, Box 50, Oakwood, Virginia 24631 for its Mine No. 4 (I.D. No. 44–06702) VA MI No. 14236AB all located in Buchanan County, Virginia; the C. J. & L Mining, Inc., 315 Railroad Avenue, Box 388, Richlands, Virginia 24641 for its Mine No. 1 (I.D. No. 44–08445); its Mine No. 2 (I.D. No. 44–08518); and its Mine No. 3 (I.D. No. 44–08444) located in McDowell County, West Virginia; the Sea B Mining, Inc., P.O. Box 26, Jewell Ridge, Virginia 24622 for its Seaboard Mine No. 2 (I.D. No. 44–03479) VA MI No. 07168AA; the C & O Mining Company, Inc., P.O. Box 249, Richlands, Virginia 24641 for its Mine No. 1 (I.D. No. 44–06606) VA MI No. 14110AC: the Donna Jean Mining, 126 West Main Street, Tazewell, Virginia 24651 for its Mine No. 1 (I.D. No. 44–06649) VA MI 14176AD; the Westfork No. 3, P.O. Box 309, Cedar Bluff, Virginia 24609 for its Mine No. 3 (I.D. No. 44–06708) VA MI No. 14092AF; the Canada Coal, P.O. Box 1697, Richlands, Virginia 24641 for its Mine No. 1 (I.D. No. 44–06713) VA MI No. 14251AB; and the Middle Creek Energy, P.O. Box 1174, Cedar Bluff, Virginia 24609 for its Mine No. 1 (I.D. No. 44–05772) VA MI No. 12308AA located in Tazewell County, Virginia. The petitioner proposes to use a low-voltage (14.4 V DC maximum), low-amperage (5.65 amps maximum), and low-wattage (81.36 watts maximum) hand-held battery powered drill inby the last open crosscut for drilling holes in the mine roof to install survey spads, instead of using a permissible hand-held battery powered drill. The petitioner states that permissible hand-held battery powered drills are not commercially available and that application of the standard would result in a diminution of safety to the miners.

4. Copperas Coal Corporation

[Docket No. M–96–04–C]

Copperas Coal Corporation, P.O. Box 679, Texas, West Virginia 25569 has filed a petition to modify the application of 30 CFR 75.503 (18.41)(f) (permissible electric face equipment; maintenance) to its Jacks Branch Mine (I.D. No. 46–08513) located in Boone County, West Virginia. The petitioner proposes to replace a padlock on battery plug connectors on mobile battery-powered machines used inby the last open cross-cut with a threaded ring and a spring loaded device to prevent the plug connector from accidently disengaging while under load. The petitioner states that application of the standard would result in a diminution of safety to the miners. The petitioner asserts that the proposed alternative method would provide at least the same measure of protection as would the mandatory standard.

5. Buck Creek Coal Company

[Docket No. M–96–05–C]

Buck Creek Coal Company, R.R. 5, Box 203, Sullivan, Indiana 47882 has filed a petition to modify the application of 30 CFR 75.364(b)(4) (weekly examination) to its Buck Creek Mine (I.D. No. 12–02033) located in Sullivan County, Indiana. Due to deteriorating roof conditions in the intersection outby the approach to the #4 Seal in the northwest Sub Main off the Main North, the area cannot be examined because access to the #4 Seal is blocked. The petitioner proposes to establish a monitoring point to continuously monitor the air quality outby (return side) of the seal; and to examine the monitoring point weekly for air quality and direction. The petitioner states that application of the standard would result in a diminution of safety to the miners.

6. Amax Coal Company

[Docket No. M–96–06–C]

Amax Coal Company has filed a petition to modify the application of 30 CFR 75.364(b)(2) (weekly examination) to its Wabash Mine (I.D. No. 11–00877) located in Wabash County, Illinois. Due to deteriorating roof conditions in certain parts of the 5 West area of the mine and certain areas of the return air course, traveling these areas in its entirety would be unsafe. The petitioner proposes to establish evaluation points at crosscuts No. 24–25 to measure for methane and the quantity of air, and at

crosscuts No. 11–12 to measure the quantity of air; to have a certified person evaluate the air course at each evaluation point once each day where coal production occurs and place their initial, date, and time at each evaluation point and record the results of the examination in a record book kept on the surface and made available for inspection by interested persons. The petitioner states that application of the standard would result in a diminution of safety to the miners. In addition, the petitioner asserts that the proposed alternative method would provide at least the same measure of protection as would the mandatory standard.

7. Consolidation Coal Company

[Docket No. M–96–07–C]

Consolidation Coal Company, Consol Plaza, 1800 Washington Road, Pittsburgh, Pennsylvania 15241–1421 has filed a petition to modify the application of 30 CFR 75.364(b)(4) (weekly examination) to its Shoemaker Mine (I.D. No. 46–01436) located in Marshall County, West Virginia. Due to deteriorating roof conditions in the No. 3 Seal in 1 North of the air course, the area would be unsafe to travel in its entirety. The petitioner proposes to establish a checkpoint and make a weekly examination where an extended probe would be used to examine the No. 3 Seal for methane and a smoke tube would be used to verify the direction of air flow; to have the person making the examination and tests record their initials, date and time in a record book which would be kept on the surface and made available for inspection by interested parties; and to maintain the checkpoint and all approaches to the checkpoint in safe condition at all times. The petitioner asserts that the proposed alternative method would provide at least the same measure of protection as would the mandatory standard.

8. Pehem Industries, Inc.

[Docket No. M–96–08–C]

Pehem Industries, Inc., Route 2, Box 294–C, Delbarton, West Virginia 25670 has filed a petition to modify the application of 30 CFR 75.388(a)(3) (boreholes in advance of mining) to its Pehem No. 1 Mine (I.D. No. 46–08530) located in Nicholas County, West Virginia. The petitioner proposes to mine within 50 feet of the highwall mining holes without drilling boreholes. The petitioner states that this mine would be driven into the Winifrede Seam from a location adjacent to the High Power Energy highwall miner workings; and that the purpose for this request for modification is to avoid the dangers presented by abandoned mine openings and adjacent mines known or suspected of dangerous quantities of water or noxious or explosive gases. The petitioner asserts that the proposed alternative method would provide at least the same measure of protection as would the mandatory standard.

9. Peabody Coal Company

[Docket No. M–96–09–C]

Peabody Coal Company, 1951 Barrett Court, P.O. Box 1990, Henderson, Kentucky 42420–1990 has filed a petition to modify the application of 30 CFR 75.1100–2(b) (quantity and location of firefighting equipment) to its Camp No. 11 Mine (I.D. No. 15–08357) located in Union County, Kentucky. The petitioner proposes to install firehouse outlets with valves in the longwall gate entries every fourth cross-cut at intervals of approximately 440 feet instead of at intervals of 300 feet. The petitioner asserts that the proposed alternative method would provide at least the same measure of protection as would the mandatory standard.

10. Monterey Coal Company

[Docket No. M–96–10–C]

Monterey Coal Company, R. Rt. 4, Box 235, Carlinville, Illinois 62626 has filed a petition to modify the application of 30 CFR 75.1100–2(i)(1) (quantity and location of firefighting equipment) to its No. 1 Mine (I.D. No. 11–00726) located in Macoupin County, Illinois. The petitioner proposes to use the following emergency materials instead of emergency materials required by the mandatory safety standard: 112 Kennedy Metal Shopping Panels with associated head sills and twist clamps; 24 Kennedy Stopping Rib Angles; 3 rolls of tape; 3 twist tools; 2 rolls of brattice cloth; 3 stopping jacks; 3 picks; 3 shovels; 9 buckets of Celtite 10–12 (or equivalent material for stopping; and 5 tons of rock dust. The petitioner asserts that the proposed alternative method would provide at least the same measure of protection as would the mandatory standard.

11. Peabody Coal Company

[Docket No. M–96–11–C]

Peabody Coal Company, R.R. 2, Box 56B2, Carlisle, Indiana 47838 has filed a petition to modify the application of 30 CFR 77.1304(a) (blasting agents; special provisions) to its Hawthorn Mine (I.D. No. 12–00326) located in Greene County, Indiana. The petitioner proposes to used waste petroleum-based lubrication oil recycled from equipment at its mine, blended with diesel fuel oil to create an ANFO blasting agent. The petitioner has outlined in this petition for modification specific procedures for implementing its alternative method of creating the ANFO blasting agent. The petitioner states that Material Safety Data Sheets for the used oil and diesel fuel oil would be maintained on its mine property and made available to the Mine Safety and Health Administration (MSHA) upon request; that records would be maintained for a period of three years and made available to MSHA and the miners' representative when requested; that within 60 days after this petition becomes final, proposed revisions to its training plan would be submitted to the District Manager which would include initial and refresher training and emergency procedures for compliance with the conditions stated in this petition; and that this modification follows MSHA's guidelines for combining used oil and ANFO with a few variations.

12. Torie Mining, Inc.

[Docket No. M–96–12–C]

Torie Mining, Inc., P.O. Box 490, Virgie, Kentucky 41572 has filed a petition to modify the application of 30 CFR 75.342 to its Torie No. 1 Mine (I.D. No. 15–17163) located in Pike County, Kentucky. The petitioner proposes to use a hand-held continuous-duty methane detector on its permissible DC-powered S&S Model 482 scoop machines. The petitioner states that each operator working underground would be certified in the proper use of the hand-held detector. The petitioner asserts that the proposed alternative method would not diminish the level of safety provided by the mandatory standard.

Request for Comments

Persons interested in these petitions may furnish written comments. These comments must be filed with the Office of Standards, Regulations and Variances, Mine Safety and Health Administration, Room 627, 4015 Wilson Boulevard, Arlington, Virginia 22203. All comments must be postmarked or received in that office on or before April 29, 1996. Copies of these petitions are available for inspection at that address.

Dated: March 21, 1996.

Patricia W. Silvey,

Director, Office of Standards, Regulations, and Variances.

[FR Doc. 96–7497 Filed 3–27–96; 8:45 am]

BILLING CODE 4510–43–P

NATIONAL AERONAUTICS AND SPACE ADMINISTRATION

[Notice (96–034)]

Notice of Prospective Patent License

AGENCY: National Aeronautics and Space Administration.

ACTION: Notice of Prospective Patent License.

NASA hereby gives notice that the SR Technology, Inc., of Houston, Texas 77064, has applied for an exclusive license to practice the invention protected by U.S. Patent No. 5,449,211 entitled ''Grapple Fixture for Use With Electromagnetic Attachment Mechanism,'' which was issued on September 12, 1995, and is assigned to the National Aeronautics and Space Administration. Written objections to the prospective grant of a license should be sent to Mr. Hardie R. Barr, Patent Attorney, Johnson Space Center.

DATE: Responses to this notice must be received by May 28, 1996.

FOR FURTHER INFORMATION CONTRACT: Mr. Hardie R. Barr, Patent Attorney, Johnson Space Center, Mail Code HA, Houston, TX 77058–3696; telephone (713) 483–1003.

Dated: March 21, 1996.

Edward A. Frankle,

General Counsel.

[FR Doc. 96–7534 Filed 3–27–96; 8:45 am]

BILLING CODE 7510–01–M

NATIONAL FOUNDATION FOR THE ARTS AND THE HUMANITIES

National Endowment for the Arts; Music Teleconference

Pursuant to Section 10(a)(2) of the Federal Advisory Committee Act (Public Law 92–463), as amended, notice is hereby given that a teleconference of the Music Advisory Panel (Jazz Masters Section) to the National Council on the Arts will be held on April 11, 1996. The teleconference will occur at the Nancy Hanks Center, 1100 Pennsylvania Avenue, NW., Washington, DC 20506. It will convene at 11 a.m. and end when business is completed.

This meeting is for the purpose of application evaluation, under the National Foundation on the Arts and the Humanities Act of 1965, as amended, including discussion of information given in confidence to the Agency by grant applicants. In accordance with the determination of the Chairman on June 22, 1995, these sessions will be closed to the public pursuant to subsections (c)(4), (6) and 9 (B) of section 552b of Title 5, United States Code.

Further information with reference to this meeting can be obtain from Ms. Kathy Plowitz-Worden, Panel Coordinator, National Endowment for the Arts, Washington, DC 20506, or call (202) 682–5691.

Dated: March 22, 1996.

Kathy Plowitz-Worden,

Panel Coordinator, Office of Guidelines and Panel Operations, National Endowment for the Arts.

[FR Doc. 96–7516 Filed 3–27–96; 8:45 am]

BILLING CODE 7537–01–M

NATIONAL LABOR RELATIONS BOARD

Privacy Act of 1974; System of Records

AGENCY: National Labor Relations Board (NLRB).

ACTION: Notice of amended system name and routine uses for NLRB system of records NLRB–20. Agency Disciplinary Case Files.

SUMMARY: This notice amends the system name and the language of four routine uses in the NLRB Privacy Act system of records NLRB–20, Agency Disciplinary Case Files.

EFFECTIVE DATE: These amendments shall become effective without further notice 30 days from the date of this publication, April 29, 1996, unless comments are received on or before that date which results in a contrary determination.

ADDRESSES: Written comments on the amendments may be submitted to the Executive Secretary, National Labor Relations Board, 1099 Fourteenth Street NW., Washington, DC 20570–0001. Copies of comments received will be available for inspection between 8:30 a.m. and 5 p.m. in Room 11600.

FOR FURTHER INFORMATION CONTACT: John J. Toner, Executive Secretary, National Labor Relations Board, 1099 Fourteenth Street NW., Washington, DC 20570–0001.

SUPPLEMENTARY INFORMATION: Pursuant to subsection (e)(11) of the Privacy Act of 1974, 5 U.S.C. 552a, the NLRB is publishing a notice amending the name of its system of records NLRB–20, Agency Disciplinary Case Files and revising existing routine uses Nos. 2, 5, 6, and 9. The system notice of NLRB–20 was last published in its entirety in 58 FR 57633, along with a proposed rule exempting the system from certain provisions of the Privacy Act, on October 26, 1993.

The name of the system is changed by placing the word ''Nonemployees'' at the end in parenthesis after the existing system name: NLRB–20, Agency Disciplinary Case Files (Nonemployees). This is being done in order to make clear that the system is only applicable to attorneys and other individuals who are not current NLRB employees. The four amended routine uses Nos. 2, 5, 6, and 9 respectively narrow the existing routine uses to specify more exactly the information that may be disclosed to a bar association or similar Federal, state, or local licensing authority; an inquiring Federal, state, or local government authority for hiring or retention of an employee; a court or other adjudicatory body in the course of presenting evidence or argument, including disclosure to opposing counsel or witnesses in the course of civil discovery; and an inquiring congressional office about the subject individual who must be the constituent about whom the records are maintained.

A report of this notice to amend the name of the system and the four routine uses in NLRB–20, Agency Disciplinary Case Files was filed pursuant to 5 U.S.C. 552a(r) with the Office of Management and Budget and with Congress. The specific changes to the notice being amended (58 FR 57633, October 26, 1993) are set forth below.

Dated: Washington, DC., March 14, 1996.

By direction of the Board.

John J. Toner,

Executive Secretary.

NLRB–20

SYSTEM NAME:

Agency Disciplinary Case Files (Nonemployees).

ROUTINE USES OF RECORDS MAINTAINED IN THE SYSTEM, INCLUDING CATEGORIES OF USERS AND THE PURPOSES OF SUCH USES:

* * * * *

2. A bar association or similar Federal, State, or local licensing authority, where the record or information, by itself or in connection with other records or information, indicates a violation or potential violation of the standards of professional conduct established or adopted by the licensing authority.

* * * * *

5. A Federal, State, or local government authority, in response to its request, that this system of records contains information relevant to the hiring or retention of an employee, the issuance or retention of a security clearance, the letting of a contract, or the issuance or retention of a license, grant, or other benefit. The other agency

or licensing organization may then make a request supported by the written consent of the individual for the entire record if it so chooses. No disclosure will be made unless the information has been determined to be sufficiently reliable to support a referral to another office within the NLRB or to another Federal agency for criminal, civil, administrative, personnel, or regulatory action.

6. A court, magistrate, administrative tribunal, or other adjudicatory body in the course of presenting evidence or argument, including disclosure to opposing counsel or witnesses in the course of civil discovery, litigation, or settlement negotiations, or in connection with criminal law proceedings, when: (a) The NLRB or any component thereof, or (b) any employee of the NLRB in his or her official capacity; or (c) any employee of the NLRB in his individual capacity where the NLRB has agreed to represent the employee; or (d) the United States Government, is a party to litigation or has interest in such litigation, and determines that such disclosure is relevant and necessary to the litigation and that the use of such records is therefore deemed by the NLRB to be for a purpose that is compatible with the purpose for which the records were collected.

* * * * *

9. A Member of Congress or a Congressional staff member in response to an inquiry of the Congressional office made at the written request of the constituent about whom the records are maintained.

[FR Doc. 96–7370 Filed 3–27–96; 8:45 am]

BILLING CODE 7545–01–M

NATIONAL SCIENCE FOUNDATION

Committee Management; Notice of Establishment

The Director of the National Science Foundation has determined that the establishment of the Advisory Committee for the NSF Science and Technology Centers (STC) Program is necessary and in the public interest in connection with the performance of duties imposed upon the Director, National Science Foundation (NSF), by 42 USC 1861 *et seq.* This determination follows consultation with the Office of Management and Budget and with the Committee Management Secretariat, General Services Administration.

Name of Committee: Advisory Committee for the NSF Science and Technology Centers (STC) Program.

Purpose and Objective: The objective of the Advisory Committee is to advise the NSF on the future of its Science and Technology Center Program. Its charge is to: (1) Consider the value of the STC Program in the context of the NSF strategic plan; (2) obtain input from other agencies that are supporting STCs; (3) consider recommendations of other NSF Advisory Committees; (4) the National Academy of Public Administration Management report; and (5) consider the Government Performance and Results Act (GPRA) report and the National Academy of Science (NAS) Review in order to provide recommendations on the future of the STC Program.

Balanced Membership Plans: To attain a balanced point of view, 15 persons will be selected with representation from academia, industry, and Federal and state governments. Membership will be diverse, including women and representation from underrepresented groups in science.

Duration: About 3 months.

Responsible NSF Officials: Dr. Sonja Sperlich, Associate Director, Science & Technology Centers, National Science Foundation, 4201 Wilson Blvd., Arlington, VA 22230, telephone 202/306–1040.

Dated: March 25, 1996.

M. Rebecca Winkler,

Committee Management Officer.

[FR Doc. 96–7600 Filed 3–27–96; 8:45 am]

BILLING CODE 7555–01–M

Advisory Panel for Biochemistry and Molecular Structure and Function; Notice of Meeting

In accordance with the Federal Advisory Committee Act (Pub. L. 92–463, as amended), the National Science Foundation announces the following meeting.

Name: Advisory Panel for Biochemistry and Molecular Structure and Function—(1134) (Panel A).

Date and Time: Wednesday, Thursday, and Friday, April 17, 18, 19, 1996—8:30 a.m. to 5:00 p.m.

Place: National Science Foundation, 4201 Wilson Blvd., Room 340, Arlington, VA 22230.

Type of Meeting: Closed.

Contact Persons: Drs. Jack Cohen and Valerie Hu, Program Directors for Molecular Biochemistry, Room 655, National Science Foundation, 4201 Wilson Boulevard, Arlington, Virginia 22230. (703/306–1443)

Purpose of Meeting: To provide advice and recommendations concerning proposals submitted to NSF for financial support.

Agenda: To review and evaluate research proposals submitted to the Molecular Biochemistry Program as part of the selection process for awards.

Reason for Closing: The proposals being reviewed include information of a proprietary or confidential nature, including technical information; financial data, such as salaries: and personal information concerning individuals associated with the proposals. These matters are exempt under 5 U.S.C. 552b(c), (4) and (6) of the Government in the Sunshine Act.

Dated: March 25, 1996.

M. Rebecca Winkler,

Committee Management Officer.

[FR Doc. 96–7558 Filed 3–27–96; 8:45 am]

BILLING CODE 7555–01–M

Special Emphasis Panel in Biological Sciences; Notice of Meeting

In accordance with the Federal Advisory Committee Act (Pub. L. 92–463, as amended), the National Science Foundation announces the following meeting.

Date: Special Emphasis Panel in Biological Sciences (#1754).

Date and Time: Tuesday, April 16, through Thursday, April 18, 1996, from 8:30 a.m. to 5:00 p.m.

Place: Room 370, National Science Foundation, 4201 Wilson Boulevard, Arlington, VA 22230

Type of Meeting: Closed.

Contact Person: Dr. DeLill Nasser, Program Director for Eukaryotic Genetics, Division of Molecular and Cellular Biosciences, Room 655, National Science Foundation, 4201 Wilson Boulevard, Arlington, VA 22230. Telephone: (703) 306–1439.

Purpose of Meeting: To provide advice and recommendations concerning proposals submitted to NSF for financial support.

Agenda: To review and evaluate CAREER proposals as part of the selection process for awards.

Reason for Closing: The proposals being reviewed include information of a proprietary or confidential nature, including technical information; financial data, such as salaries and personal information concerning individuals associated with the proposals. These matters are exempt under 5 U.S.C. 552b(c), (4) and (6) of the Government in the Sunshine Act.

Dated: March 25, 1996.

M. Rebecca Winkler,

Committee Management Officer.

[FR Doc. 96–7551 Filed 3–27–96; 8:45 am]

BILLING CODE 7555–01–M

Special Emphasis Panel in Chemistry; Notice of Meeting

In accordance with the Federal Advisory Committee Act (Pub. L. 92–463, as amended), the National Science Foundation announces the following meeting.

Name and Committee Code: Special Emphasis Panel in Chemistry (#1191).

Date and Time: April 15–16, 1996, 8:00 a.m. to 5:00 p.m.

Place: Rooms 310, 360, 365, 370, 375, 380, 390, and 253, National Science Foundation, 4201 Wilson Boulevard, Arlington, VA 22230.

Type of Meeting: Closed.

Contact Person: Dr. Karolyn Eisenstein, Program Director, Office of Special Projects, Chemistry Division, Room 1055, National Science Foundation 4201 Wilson Boulevard, Arlington, VA 22230. Telephone: (703) 306–1850.

Purpose of Meeting: To provide advice and recommendations concerning applications submitted to NSF for financial support.

Agenda: To review and evaluate applications for Postdoctoral Fellowships in Chemistry.

Reason for Closing: The proposals being reviewed include information of a proprietary or confidential nature, including technical information; financial data, such as salaries and personal information concerning individuals associated with the proposals. These matters are exempt under 5 U.S.C. 552b(c) (4) and (6) of the Government in the Sunshine Act.

Dated: March 25, 1996.

M. Rebecca Winkler,

Committee Management Officer.

[FR Doc. 96–7555 Filed 3–22–96; 8:45 am]

BILLING CODE 7555–01–M

Special Emphasis Panel in Cross Disciplinary Activities; Notice of Meeting

In accordance with the Federal Advisory Committee Act (Pub. L. 92–463, as amended), the National Science Foundation announced the following meeting.

Name: Special Emphasis Panel in Cross Disciplinary Activities (#1193).

Date and Time: April 16, 1996; 8:30 a.m.–5:00 p.m.

Place: National Science Foundation, 4201 Wilson Boulevard, Room 1150 and 1120, Arlington, VA 22230.

Type of Meeting: Closed.

Contact Person(s): Harry G. Hedges, Program Director CISE/CDA, Room 1160, National Science Foundation, 4201 Wilson Boulevard, Arlington, VA 22230. Telephone: (703) 306–1980.

Purpose of Meeting: To provide advice and recommendations concerning proposals submitted to NSF for financial support.

Agenda: To review and evaluate CISE Educational Innovation proposals as part of the selection process for awards.

Reason for Closing: The proposals being reviewed include information of a proprietary or confidential nature, including technical information; financial data, such as salaries; and personal information concerning individuals associated with the proposals. These matters are exempt under 5 U.S.C. 552b(c), (4) and (6) of the Government in the Sunshine Act.

Dated: March 25, 1996.

M. Rebecca Winkler,

Committee Management Officer.

[FR Doc. 96–7559 Filed 3–27–96; 8:45 am]

BILLING CODE 7555–01–M

Special Emphasis Panel in Design, Manufacture, and Industrial Innovation; Notice of Meeting

In accordance with the Federal Advisory Committee Act (Pub. L. 92–463, as amended), the National Science Foundation announces the following meeting:

Name: Special Emphasis Panel in Design, Manufacture, and Industrial Innovation—(1194).

Date and Time: April 15, 1996, 9:00 a.m.–4:00 p.m.

Place: Room 565, National Science Foundation, 4201 Wilson Boulevard, Arlington, VA 22230.

Type of Meeting: Closed.

Contact Person: Dr. Sara B. Nerlove, Program Manager, SBIR Office, (703) 306–1391 and Dr. Edward H. Bryan, Program Manager, ENG/BES, (703) 306–1318, National Science Foundation, 4201 Wilson Boulevard, Arlington, VA 22230.

Purpose of Meeting: To provide advice and recommendations concerning proposals submitted to the NSF for financial support.

Agenda: To review and evaluate Environmental Engineering Technology Phase II proposals as part of the selection process for awards.

Reason for Closing: The proposals being reviewed include information of a proprietary or confidential nature, including technical information, financial data such as salaries, and personal information concerning individuals associated with the proposals. These matters are exempt under 5 U.S.C. 552b(c) (4) and (6) of the Government in the Sunshine Act.

Dated: March 25, 1996.

M. Rebecca Winkler,

Committee Management Officer.

[FR Doc. 96–7560 Filed 3–27–96; 8:45 am]

BILLING CODE 7555–01–M

Advisory Panel for Developmental Mechanisms; Notice of Meeting

In Accordance with the Federal Advisory Committee Act (Pub. L. 92–463, as amended), the National Science Foundation announces the following meeting.

Name: Advisory Panel for Developmental Mechanisms (#1141).

Date and Time: April 17–19, 1996 8:30 am to 5:00 pm.

Place: Room 370, National Science Foundation, 4201 Wilson Boulevard, Arlington, Virginia 22230.

Type of Meeting: Part-open.

Contact Person: Dr. Judith Plesset and Dr. Charles Little, Program Directors, Developmental Mechanisms, Room 685, National Science Foundation, 4201 Wilson Boulevard, Arlington, Virginia 22230. Telephone: (703) 306–1417.

Minutes: May be obtained from the contact person listed above.

Purpose of Meeting: To provide advice and recommendations concerning proposals submitted to NSF for financial support.

Agenda: To review and evaluate Developmental Mechanism proposals as part of the selection process for awards.

Reason for Closing: The proposals being reviewed include information of a proprietary or confidential nature, including technical information; financial data, such as salaries; and personal information concerning individuals associated with the proposals. These matters are exempt under 5 U.S.C. 552b(c), (4) and (6) of the Government in the Sunshine Act.

Dated: March 25, 1996.

M. Rebecca Winkler,

Committee Management Officer.

[FR Doc. 96–7553 Filed 3–27–96; 8:45 am]

BILLING CODE 7555–01–M

Earth Sciences Proposal Review Panel; Notice of Meeting

In accordance with the Federal Advisory Committee Act (Public Law 92–463, as amended), the National Science Foundation announces the following meeting:

Name: Earth Sciences Proposal Review Panel (#1569).

Date: April 19, 1996.

Time: 8:00 a.m. to 6:00 p.m. each day.

Place: Room 1060, National Science Foundation, 4201 Wilson Boulevard, Arlington, VA 22230.

Type of Meeting: Closed.

Contact Person: Dr. Thomas O. Wright, Program Director, Tectonics Program, Division of Earth Sciences, Room 785, National Science Foundation, Arlington, VA 22230, (703) 306–1552.

Purpose of Meeting: To provide advice and recommendations concerning proposals submitted to NSF for financial support.

Agenda: To review and evaluate earth sciences as part of the selection process for awards.

Reason for Closing: The proposals being reviewed include information of a proprietary or confidential nature, including technical information; financial data, such as salaries; and personal information concerning individuals associated with proposals. These matters are exempt under 5 U.S.C. 552b(c), (4) and (6) of the Government in the Sunshine Act.

Dated: March 25, 1996.

M. Rebecca Winkler,

Committee Management Officer.

[FR Doc. 96–7552 Filed 3–27–96; 8:45 am]

BILLING CODE 7555–01–M

Advisory Committee for Engineering: Notice of Meeting

In accordance with the Federal Advisory Committee Act (Pub. L. 92–463, as amended), the National Science Foundation announces the following meeting.

Name and Committee Code: Advisory Committee for Engineering (#1170).

Date and Time: April 18, 1996/9:30 a.m.-5:00 p.m. and April 19, 1996/8:30 a.m.–12 Noon.

Place: Room 1235, (National Science Board Meeting Room) National Science Foundation, 4201 Wilson Boulevard, Arlington, VA.

Type: Open.

Contact Person: M. Christina Gabreil, Advisory Committee for Engineering, National Science Foundation, Room 505, 4201 Wilson Boulevard, Arlington, VA 22230. Telephone: (703) 306–1302.

Minutes: May be obtained from the contact person listed above.

Purpose: To provide advice, recommendations and counsel on major goals and policies pertaining to Engineering programs and activities.

Agenda: Discussion on issues, opportunities and future directions for the Engineering Directorate; discussion of Engineering Directorate budget situation as well as other items.

Dated: March 25, 1996.

M. Rebecca Winkler,

Committee Management Officer.

[FR Doc. 96–7554 Filed 3–22–96; 8:45 am]

BILLING CODE 7555–01–M

Special Emphasis Panel in Materials Research; Notice of Meeting

In accordance with the Federal Advisory Committee Act (Pub. L. 92–463 as amended), the National Science Foundation announces the following meeting:

Name: Special Emphasis Panel in Materials Research (DMR) 1203

Dates and Times: April 15, 1996, 1:00 p.m.–9:00 p.m.; April 16, 1996, 8:00 a.m.–6:00 p.m.; April 17, 1996, 8:00 a.m.–5:00 p.m.

Place: National Science Foundation; 4201 Wilson Boulevard, Arlington, VA 22230; Rooms 320, 330, 360, 365, 380, and 970.

Type of Meetings: Closed.

Contact Person: Dr. W. Lance Haworth, Program Director, Materials Research Science and Engineering Centers, Division of Materials Research, Room 1065, National Science Foundation, 4201 Wilson Blvd., Arlington, VA, 22230. Telephone (703) 306–1815.

Purpose of Meetings: To provide advice and recommendations concerning proposals submitted to NSF for financial support by the Materials Research Science and Engineering Centers Program.

Agenda: Review and evaluate proposals as part of the selection process for NSF support.

Reason for Closing: The proposals being reviewed may include information of a proprietary or confidential nature, including technical information, financial data such as salaries, and personal information concerning individuals associated with the proposals. These matters are exempt under 5 U.S.C. 552b(c) (4) and (6) of the Government in the Sunshine Act.

Dated: March 25, 1996.

M. Rebecca Winkler,

Committee Management Officer.

[FR Doc. 96–7562 Filed 3–27–96; 8:45 am]

BILLING CODE 7555–01–M

Advisory Panel for Neuroscience; Notice of Meeting

In accordance with the Federal Advisory Committee Act (Pub. L. 92–463, as amended), the National Science Foundation announces the following meeting:

Name: Advisory Panel for Neuroscience (1158).

Date and Time: April 15–16, 1996; 9:00 a.m. to 5:00 p.m.

Place: Room 310, 4201 Wilson Boulevard, Arlington, VA.

Type of Meeting: Part-Open.

Contact Person: Dr. Christopher Platt, Program Director, Sensory Systems, Division of Integrative Biology and Neuroscience, Suite 685, National Science Foundation, 4201 Wilson Blvd., Arlington, VA 22230 Telephone: (703) 306–1424.

Purpose of Meeting: To provide advice and recommendations concerning proposals submitted to NSF for financial support.

Minutes: May be obtained from the contact person listed above.

Agenda: Open Session: April 15; 2:00 p.m. to 3:00 p.m., to discuss goals and assessment procedures. Closed Session: April 15, 9:00 a.m. to 2:00 p.m., and 3:00 p.m. to 5:00 p.m.; April 16, 9:00 a.m. to 5:00 p.m. To review and evaluate Sensory Systems proposals as part of the selection process for awards.

Reason for Closing: The proposals being reviewed include information of a proprietary or confidential nature, including technical information; financial data, such as salaries; and personal information concerning individuals associated with the proposals. These matters are exempt under 5 U.S.C. 552b(c) (4) and (6) of the Government in the Sunshine Act.

Dated: March 25, 1996.

M. Rebecca Winkler,

Committee Management Officer.

[FR Doc. 96–7557 Filed 3–27–96; 8:45 am]

BILLING CODE 7555–01–M

Advisory Panel for Presidential Faculty Fellows; Notice of Meeting

In accordance with the Federal Advisory Committee Act (Pub. L. 92–463, as amended), the National Science Foundation announces the following meeting:

Name: Advisory Panel for Presidential Faculty Fellows (#139).

Date and Time: April 16–17, 1996; 8:30 a.m. to 5:00 p.m. both days.

Place: Clarendon Room, Arlington Holiday Inn, 4610 North Fairfax Drive, Arlington, VA 22203

Type of Meeting: Closed.

Contact Person: Dr. Margaret A. Cavanaugh, Program Director, National Science Foundation, 4201 Wilson Boulevard, Arlington, VA 22230, Telephone: (703) 306–1842.

Purpose of Meeting: To provide advice and recommendation concerning nominations submitted to NSF for financial support.

Agenda: To review and evaluate nomination for the Presidential Faculty Fellows Program.

Reason for Closing: The nominations being reviewed include information of a proprietary or confidential nature, including technical information; and personal information concerning associated with the proposals. These matters are exempt under 5 U.S.C. 552 b(c) (4) and (6) of the Government in the Sunshine Act.

Dated: March 25, 1996.

M. Rebecca Winkler,

Committee Management Officer.

[FR Doc. 96–7561 Filed 3–27–96; 8:45 am]

BILLING CODE 7555–01–M

Special Emphasis Panel in Research, Evaluation and Communication; Notice of Meeting

In accordance with the Federal Advisory Committee Act (Pub. L. 92–463, as amended), the National Science Foundation announces the following meeting:

Name: Special Emphasis Panel in Research, Evaluation and Communication (#1210).

Date and Time: April 17, 1996; 8:30 a.m. to 5:00 p.m.; April 18, 1996; 8:30 a.m. to 5:00 p.m.; April 19, 1996, 8:30 a.m. to 4:00 p.m.

Place: Rooms 360, 365, and 855, National Science Foundation, 4201 Wilson Boulevard, Arlington, VA 22230.

Type of Meeting: Closed.

Contact Person: Dr. Nora Sabelli, Senior Program Director, 4201 Wilson Boulevard, Room 855, Arlington, VA 22230. Telephone (703) 306–1651.

Purpose of Meeting: To provide advice and recommendations concerning proposals submitted to NSF for financial support.

Agenda: To review and evaluate proposals and provide advice and recommendations as part of the selection process for proposals submitted to the Networking Infrastructure for Education Program.

Reason for Closing: Because the proposals reviewed include information of a proprietary or confidential nature, including technical information; financial data, such as salaries; and personal information concerning individuals associated with proposals, the meetings are closed to the public. These matters are within exemptions

(4) and (6) of 5 U.S.C. 552b(c), Government in the Sunshine Act.

M. Rebecca Winkler,

Committee Management Officer.

[FR Doc. 96–7556 Filed 3–27–96; 8:45 am]

BILLING CODE 7555–01–M

NUCLEAR REGULATORY COMMISSION

[Docket No. 50–302]

Florida Power Corporation; Notice of Consideration of Issuance of Amendment to Facility Operating License, Proposed No Significant Hazards Consideration Determination, and Opportunity for a Hearing

The U.S. Nuclear Regulatory Commission (the Commission) is considering issuance of an amendment to Facility Operating License No. DPR–72, issued to Florida Power Corporation, et al. (the licensee), for operation of the Crystal River Nuclear Generating Plant, Unit No. 3 (CR3 or the facility) located in Citrus County, Florida.

Currently, the technical specifications (TS) for CR3 relating to the Once Through Steam Generator's (OTSG's) tube inspection acceptance criteria, specify repair limit for removing steam generator tubes from service. This repair limit is based on a structural evaluation of a simplified model of tubes with uniform through wall (T/W) thinning. A recent tube-pull examination at CR3 identified a number of low signal-to-noise (S/N) tube eddy current indications. The licensee indicated that these S/N indications are a substantially different morphology from the model used to develop the current TS inspection and acceptance limit. As a result of the small signal amplitude associated with these S/N indications, they could not be accurately sized by conventional bobbin coil phase angle.

By letter dated May 31, 1995, proposed TS changes which involved a broad and long-term criteria addressing both wear and Inter-Granular-Attack (IGA) degradation mechanisms. The licensee's May 31, 1995 request was noticed in the Federal Register on July 5, 1995 (60 FR 35071). By letter dated March 21, 1996, the licensee superseded its May 31, 1995 request and proposed a more focused TS change which would be applicable for one cycle duration, and only to Inter-Granular-Attack (IGA) degradation mechanisms in a limited region of the OTSG. Accordingly, this supersedes that notice in its entirety.

Specifically, the licensee proposed to:

A. Revise TS 3.4.12 item d, to read: ''150 gpd primary to secondary LEAKAGE through any one steam generator (OTSG).''

B. Revise TS 5.6.2.10.2, page 5.0–14, ''The results of each sample inspection shall be classified into one of the following three categories:'' to read: ''The results of each bobbin coil sample inspection shall be classified into one of the following three categories:''

C. Revise the Note in TS 5.6.2.10.2, page 5.0–14, ''In all inspections, previously degraded tubes whose degradation has not been spanned by a sleeve must exhibit a significant increase in the applicable imperfection size measurement (>+0.3V bobbin coil amplitude increase for first span IGA indications or >10% further wall penetration for all other imperfections) to be included in the below percentage calculations.''

D. Revise the second sentence in TS 5.6.2.10.4.a.2, page 5.0–16, ''Eddy-current * * * as imperfections'' to read: ''Any indication below all degraded tube criteria specified in item below may be considered as imperfections.''

E. Revise TS 5.6.2.10.4.a.4, page 5.0–16, to read: ''Degraded Tube means a tube containing a first span IGA indication with a bobbin coil amplitude [greater than or equal to] 0.65V, an axial extent of [greater than or equal to] 0.13 inch, or a circumferential extent of [greater than or equal to] 0.3 inch or other imperfections [greater than or equal to] 20% of the nominal wall thickness caused by degradation except where all such degradation has been spanned by the installation of a sleeve.''

F. Add TS 5.6.2.10.4.a.7 ''First span Inter-Granular-Attack (IGA) indication means a bobbin coil indication located between the lower tubesheet secondary face and the first tube support plate confirmed by MRPC to have a volumetric morphology characteristic of IGA.''

G. As a result of adding the new TS 5.6.2.10.4.a.7 above, revise applicable TS to reflect the new ''first span IGA definition'' term. Renumber 5.6.2.10.4.a.8 and 9 to 5.6.2.10.4.a.9 and 10.

H. Renumber TS 5.6.2.10.4.a.7 to TS 5.6.2.10.4.a.8, and revise to read: ''Plugging/Sleeving Limit means the extent of degradation beyond which the tube shall be restored to serviceability by the installation of a sleeve or removed from service because it may become unserviceable prior to the next inspection. The limit for first span IGA indications is a bobbin coil amplitude of 1.25V, an axial extent of 0.25 inch, or a circumferential extent of 0.6 inch. The limit for indications other than first span IGA is equal to 40% of the nominal tube or sleeve wall thickness. No more than five thousand sleeves may be installed in each OTSG.''

I. Revise TS 5.7.2.c.2, page 5.0–29, to read: ''Following each inservice inspection of steam generator (OTSG) tubes, the NRC shall be notified of the following prior to plant ascension into Mode 4.

1. Number of tubes plugged and sleeved
2. Crack like indications in the first span
3. An assessment of growth in the first span indications, and
4. Results of in-situ pressure testing, if performed.

The complete results of the OTSG tube inservice inspection shall be submitted to the NRC within 90 days following the completion of the inspection. The report shall include:

1. Number and extent of tubes inspected,
2. Location and percent of wall-thickness penetration for each indication of an imperfection,
3. Location, bobbin coil amplitude, and axial and circumferential extent (if determined) for each first span IGA indication, and
4. Identification of tubes plugged and tubes sleeved.''

The licensee requested that the above proposed license amendment be processed as an emergency or exigent amendment to prevent delay of the restart of the facility which is currently in an refueling outage. The licensee described the circumstances involving the request and stated that its request meets the requirements of 10 CFR 50.91a (5) and (6). The licensee stated that the complexity of the issues involved, differences between the licensee's and the industry's approach, and evolving industry/NRC interactions on the steam generator integrity issues resulted in a longer than anticipated NRC staff review time of the licensee's previous submittal (May 31, 1995). As a result, staff review of the licensee's May 31, 1995 submittal has not been completed. Therefore, the licensee proposed this more limited license amendment as described herein. Before issuance of the proposed license amendment, the Commission will have made findings required by the Atomic Energy Act of 1954, as amended (the Act) and the Commission's regulations.

Pursuant to 10 CFR 50.91(a)(6) for amendments to be granted under exigent circumstances, the NRC staff must determine that the amendment request involves no significant hazards consideration. Under the Commission's regulations in 10 CFR 50.92, this means that operation of the facility in accordance with the proposed

amendment would not (1) involve a significant increase in the probability or consequences of an accident previously evaluated; or (2) create the possibility of a new or different kind of accident from any accident previously evaluated; or (3) involve a significant reduction in a margin of safety. As required by 10 CFR 50.91(a), the licensee has provided its analysis of the issue of no significant hazards consideration, which is presented below:

1. The proposed change will not significantly increase the probability or consequences of an accident previously evaluated. The relevant accidents are excessive leakage or steam generator tube rupture (as a consequence of MSLB [Main steam Line Break] or otherwise).

RG [Regulatory Guide] 1.121 establishes a standard method for demonstrating structural integrity under worse-than-DBE [design basis Event] conditions. The existing TS is based on this RG. The first span, IGA disposition strategy continues to rely on this guidance. Current TW [through wall] sizing techniques would allow defects greater than the current TS limit of 40% to remain in service since these techniques do not accurately measure percent wall penetration for small volume indications. The proposed disposition strategy is based on measurable eddy current parameters of voltage, axial extent, and circumferential extent has been shown to provide a higher confidence that unacceptable flaws are removed from service. Therefore, the probability of a Steam Generator Tube Rupture (SGTR) is not increased and may well be decreased by implementation of this S/N disposition strategy.

The probability of OTSG tube leakage during normal operation or accident conditions is not adversely affected by the proposed S/N disposition strategy. Operating history indicates essentially no primary to secondary leakage through the OTSG tubes at CR–3. Growth rate studies imply this trend could be expected to continue. However, for conservatism the OTSG leakage limit has been reduced from 1 gallon per minute through all OTSGs to 150 gallons per day through any one OTSG. This change is consistent with the guidance provided in Generic Letter 95–05. Small volume indications which might leak during worse-case FWLB [Feedwater Line Break] conditions are addressed in the RG 1.121 evaluation. The disposition strategy ensure these indications are removed from service as part of the inservice inspection. Once detected, the proposed criteria is at least as effective in determining those indications which should be removed from service as are the existing TS limits.

The first span IGA disposition strategy is an integral part of an overall effort to better address these and similar phenomena in OTSGs.

2. The proposed change will not create the possibility of a new or different kind of accident from any accident previously evaluated.

The key 'new or different' accidents addressed in this and similar proposals is the potential for MSLB-induced multiple SGTR or excessive primary-to-secondary leakage during such events. While these events are addressed in CR–3 Emergency Operating Procedures (EOPs), they are beyond those licensed for the facility.

However, as noted above, the probability of MSLB induced multiple SGTR is reduced by more effective screening and plugging/sleeving criteria. The probability of detection and identification of tubes which should be removed from service is maintained or improved by the S/N disposition strategy. The likelihood of adverse effects from plugging sound tubes is reduced. The operation of the OTSG or related structures, systems or components is otherwise unaffected.

3. The proposed change will not involve a significant reduction to any margin of safety.

The margins of safety defined in RG 1.121, including the required pressure used in the structural analysis, are retained. The probability of detecting degradation is unchanged since bobbin coil methods will continue to be the primary means of initial detection. The probability of leakage remains acceptably small. The proposed S/N disposition strategy is an enhancement to the inservice inspection of OTSG tubing that will provide a higher level of confidence that tubes exceeding the allowable limits are repaired while sound tubes are left in service. Based upon results of the various growth rate studies, the probability of an accident at the end of cycle is essentially the same as the beginning.

The NRC staff has reviewed the licensee's analysis and, based on this review, it appears that the three standards of 50.92(c) are satisfied. Therefore, the NRC staff proposes to determine that the amendment request involves no significant hazards consideration.

The Commission is seeking public comments on this proposed determination. Any comments received within 15 days after the date of publication of this notice will be considered in making any final determination.

Normally, the Commission will not issue the amendment until the expiration of the 15-day notice period. However, should circumstances change during the notice period, such that failure to act in a timely way would result, for example, in derating or shutdown of the facility, the Commission may issue the license amendment before the expiration of the 15-day notice period, provided that its final determination is that the amendment involves no significant hazards consideration. The final determination will consider all public and State comments received. Should the Commission take this action, it will publish in the Federal Register a notice of issuance. The Commission expects that the need to take this action will occur very infrequently.

Written comments may be submitted by mail to the Rules Review and Directives Branch, Division of Freedom of Information and Publications Services, Office of Administration, U.S. Nuclear Regulatory Commission, Washington, DC 20555, and should cite the publication date and page number of this Federal Register notice. Written comments may also be delivered to Room 6D22, Two White Flint North, 11545 Rockville Pike, Rockville, Maryland, from 7:30 a.m. to 4:15 p.m. Federal workdays. Copies of written comments received may be examined at the NRC Public Document Room, the Gelman Building, 2120 L Street, NW., Washington, DC.

The filing of requests for hearing and petitions for leave to intervene is discussed below.

By April 29, 1996, the licensee may file a request for a hearing with respect to issuance of the amendment to the subject facility operating license and any person whose interest may be affected by this proceeding and who wishes to participate as a party in the proceeding must file a written request for a hearing and a petition for leave to intervene. Requests for a hearing and a petition for leave to intervene shall be filed in accordance with the Commission's ''Rules of Practice for Domestic Licensing Proceedings'' in 10 CFR Part 2. Interested persons should consult a current copy of 10 CFR 2.714 which is available at the Commission's Public Document Room, the Gelman Building, 2120 L Street, NW., Washington, DC, and at the local public document room located at the Coastal Region Library, 8619 W. Crystal Street, Crystal River, Florida 32629. If a request for a hearing or petition for leave to intervene is filed by the above date, the Commission or an Atomic Safety and Licensing Board, designated by the Commission or by the Chairman of the Atomic Safety and Licensing Board Panel, will rule on the request and/or petition; and the Secretary or the designated Atomic Safety and Licensing Board will issue a notice of hearing or an appropriate order.

As required by 10 CFR 2.714, a petition for leave to intervene shall set forth with particularity the interest of the petitioner in the proceeding, and how that interest may be affected by the results of the proceeding. The petition should specifically explain the reasons why intervention should be permitted with particular reference to the following factors: (1) The nature of the petitioner's right under the Act to be made a party to the proceeding; (2) the

nature and extent of the petitioner's property, financial, or other interest in the proceeding; and (3) the possible effect of any order which may be entered in the proceeding on the petitioner's interest. The petition should also identify the specific aspect(s) of the subject matter of the proceeding as to which petitioner wishes to intervene. Any person who has filed a petition for leave to intervene or who has been admitted as a party may amend the petition without requesting leave of the Board up to 15 days prior to the first prehearing conference scheduled in the proceeding, but such an amended petition must satisfy the specificity requirements described above.

Not later than 15 days prior to the first prehearing conference scheduled in the proceeding, a petitioner shall file a supplement to the petition to intervene which must include a list of the contentions which are sought to be litigated in the matter. Each contention must consist of a specific statement of the issue of law or fact to be raised or controverted. In addition, the petitioner shall provide a brief explanation of the bases of the contention and a concise statement of the alleged facts or expert opinion which support the contention and on which the petitioner intends to rely in proving the contention at the hearing. The petitioner must also provide references to those specific sources and documents of which the petitioner is aware and on which the petitioner intends to rely to establish those facts or expert opinion. Petitioner must provide sufficient information to show that a genuine dispute exists with the applicant on a material issue of law or fact. Contentions shall be limited to matters within the scope of the amendment under consideration. The contention must be one which, if proven, would entitle the petitioner to relief. A petitioner who fails to file such a supplement which satisfies these requirements with respect to at least one contention will not be permitted to participate as a party.

Those permitted to intervene become parties to the proceeding, subject to any limitations in the order granting leave to intervene, and have the opportunity to participate fully in the conduct of the hearing, including the opportunity to present evidence and cross-examine witnesses.

If the amendment is issued before the expiration of the 30-day hearing period, the Commission will make a final determination on the issue of no significant hazards consideration. If a hearing is requested, the final determination will serve to decide when the hearing is held.

If the final determination is that the amendment request involves no significant hazards consideration, the Commission may issue the amendment and make it immediately effective, notwithstanding the request for a hearing. Any hearing held would take place after issuance of the amendment.

If the final determination is that the amendment request involves a significant hazards consideration, any hearing held would take place before the issuance of any amendment.

A request for a hearing or a petition for leave to intervene must be filed with the Secretary of the Commission, U.S. Nuclear Regulatory Commission, Washington, DC 20555, Attention: Docketing and Services Branch, or may be delivered to the Commission's Public Document Room, the Gelman Building, 2120 L Street, NW., Washington, DC, by the above date. Where petitions are filed during the last 10 days of the notice period, it is requested that the petitioner promptly so inform the Commission by a toll-free telephone call to Western Union at 1–(800) 248–5100 (in Missouri 1–(800) 342–6700). The Western Union operator should be given Datagram Identification Number N1023 and the following message addressed to Eugene V. Imbro: petitioner's name and telephone number, date petition was mailed, plant name, and publication date and page number of this Federal Register notice. A copy of the petition should also be sent to the Office of the General Counsel, U.S. Nuclear Regulatory Commission, Washington, DC 20555, and to A. H. Stephens, General Counsel, Florida Power Corporation, MAC—A5D, P. O. Box 14042, St. Petersburg, Florida 33733, attorney for the licensee.

Nontimely filings of petitions for leave to intervene, amended petitions, supplemental petitions and/or requests for hearing will not be entertained absent a determination by the Commission, the presiding officer or the presiding Atomic Safety and Licensing Board that the petition and/or request should be granted based upon a balancing of the factors specified in 10 CFR 2.714(a)(1) (i)–(v) and 2.714(d).

For further details with respect to this action, see the application for amendment dated March 21, 1996, which is available for public inspection at the Commission's Public Document Room, the Gelman Building, 2120 L Street, NW., Washington, DC, and at the local public document room, located at the Coastal Region Library, 8619 W. Crystal Street, Crystal River, Florida 32629.

Dated at Rockville, Maryland, this 25th day of March 1996.

For the Nuclear Regulatory Commission.

Bart C. Buckley,

Acting Director, Project Directorate II–1, Division of Reactor Projects—I/II, Office of Nuclear Reactor Regulation.

[FR Doc. 96–7674 Filed 3–27–96; 8:45 am]

BILLING CODE 7590–01–P

Revision of the NRC Enforcement Policy; Correction

AGENCY: Nuclear Regulatory Commission.

ACTION: Policy statement: Correction.

SUMMARY: This document corrects a notice appearing in the Federal Register on June 30, 1995 (60 FR 34381), that announced the revision of the Nuclear Regulatory Commission's (NRC's) Enforcement Policy. This action is necessary to correct an inadvertent omission of the Paperwork Reduction Act Statement for the policy statement. Because this notice and a notice announcing the removal of the NRC's Enforcement Policy from the Code of Federal Regulations (60 FR 34380; June 30, 1995) were subsequently issued in their entirety as NUREG–1600, NUREG–1600 also failed to include the Paperwork Reduction Act Statement for the revised policy statement. An errata for NUREG–1600 is being issued to address this issue.

FOR FURTHER INFORMATION CONTACT: James Lieberman, Director, Office of Enforcement, U.S. Nuclear Regulatory Commission, Washington, DC 20555–0001, telephone (301) 415–2741.

On page 34383, after the first full paragraph in the first column, (i.e., immediately preceding the revised policy statement), insert the following section:

Paperwork Reduction Act Statement

This policy statement does not contain a new or amended information collection requirement subject to the Paperwork Reduction Act of 1980 (44 U.S.C. 3501 *et seq.*). Existing requirements were approved by the Office of Management and Budget, approval number 3150–0136. The approved information collection requirements contained in this policy statement appear in Section VII.C.

Dated at Rockville, Maryland, this 22nd day of March 1996.

For the Nuclear Regulatory Commission.

John C. Hoyle,

Secretary of the Commission.

[FR Doc. 96–7531 Filed 3–27–96; 8:45 am]

BILLING CODE 7590–01–P

[Docket No. 50–244]

Rochester Gas and Electric Corporation; R. E. Ginna Nuclear Power Plant; Environmental Assessment and Finding of No Significant Impact

The U.S. Nuclear Regulatory Commission (NRC) is considering granting an exemption from Facility Operating License No. DRP–18, issued to Rochester Gas and Electric Corporation (RG&E or the licensee), for operation of the R.E. Ginna Nuclear Power Plant (Ginna), located in Wayne County, New York.

Environmental Assessment

Identification of the Proposed Action

The proposed action is the granting of an exemption from Appendix K to Part 50 of Title 10 of the *Code of Federal Regulations* (10 CFR Part 50), Paragraph I.D.3, ''Calculation of Reflood Rate for Pressurized Water Reactors,'' and Paragraph I.D.5, ''Refill and Reflood Heat Transfer for Pressurized Water Reactors.''

The Ginna design relies on upper plenum injection (UPI) for the emergency core cooling system (ECCS) injection during the reflood phase of a large-break (LB) loss-of-coolant accident (LOCA). UPI is therefore not a lower-flooding design, and the prescriptions in Paragraphs I.D.3 and I.D.5 prescriptions do not apply. The evaluation model (EM) described in WCAP–10924–P, Volume 1, Revision 1, Addendum 4, ''Westinghouse UPI Model Improvements,'' dated August 1990 is an empirically verified model, approved by the staff, and is more directly applicable to top-flooding situations at Ginna that satisfy the intent of Appendix K, Paragraphs I.D.3 and I.D.5.

The proposed action is in accordance with the licensee's exemption request dated November 5, 1992, as supplemented by letter dated June 19, 1995.

The Need for the Proposed Action

The licensee has requested the proposed action to support conversion from a 12-month fuel cycle to an 18-month fuel cycle (Cycle 26), which is scheduled to begin with the startup of the plant from the 1996 refueling outage on May 31, 1996. During Cycle 26, the plant will operate with different thermal-hydraulic characteristics and neutron (power) distribution in the core. Higher power distribution limits and larger peaking factors require an update of an ECCS EM that is acceptable to the staff and includes the effects of UPI. The licensee's submittal of November 5, 1992, as supplemented on June 19, 1995, references the EM used to perform an LB LOCA analysis for plants with UPI are described in WCAP–10924–P, Volume 1, Revision 1, Addendum 4, and gives the technical bases for the requested exemption for Ginna.

Environmental Impacts of the Proposed Action

The Commission has completed its evaluation of the proposed action and concludes that the proposed exemption would allow the licensee to use the EM that is described in WCAP–10924–P, Volume 1, Revision 1, Addendum 4, and has been approved by the staff. The staff has concluded that the empirically verified EM model is more directly applicable to top-flooding situations at Ginna, and thus satisfies the intent of Appendix K, Paragraphs I.D.3 and I.D.5.

The exemption will not result in any changes to the facility or the environment.

The R.E. Ginna Nuclear Plant reactor is designed to withstand the effects caused by a loss-of-coolant accident including the double ended severance of the largest pipe in the reactor coolant system. The reactor core and internals together with the safety injection system are designed so that the reactor can be safely shut down, the essential heat transfer geometry of the core preserved following the accident, and the long-term coolability maintained. The ECCS is designed to meet acceptance criteria which preclude fission product release to the environment in excess of the guideline values of 10 CFR Part 100. The acceptance criteria for the LOCA, as prescribed in 10 CFR 50.46, are

(1) The calculated peak fuel element cladding temperature is below the limit of 2200 °F,

(2) The cladding temperature transient is terminated at a time when the core geometry is still amenable to cooling. The localized cladding oxidation of 17% are not exceeded during or after quenching,

(3) The amount of hydrogen generated by fuel element cladding that reacts chemically with water or steam does not exceed an amount corresponding to interaction of 1% of the total amount of Zircaloy in the reactor,

(4) The core remains amenable to cooling during and after the break, and

(5) The core temperature is reduced and decay heat is removed for an extended period of time, as required by the long-lived radioactivity remaining in the core.

These criteria were established to provide significant margin in ECCS performance following a LOCA. The ECCS is designed to meet acceptance criteria even when operating with the most severe single failure.

The anticipated impact of the plant on the environment was evaluated in the Staff's Final Environmental Statement (FES) dated December 1973. Subsequently, in preparation for the Atomic Safety and Licensing Board's (ASLB) hearing on the conversion of Provisional Operating License No. DPR–18 for the R.E. Ginna Nuclear Power Plant to a Full-Term Operating License, the NRC staff performed an Environmental Evaluation (EE) dated June 17, 1983, of the original FES. The staff EE did not identify any significant new environmental impacts or any significant changes from those identified previously in the FES.

The offsite exposure from releases due to postulated design basis accidents has been analyzed by the licensee in the RG&E Ginna Nuclear Power Plant Updated Final Safety Analyses Report (UFSAR). The results of these analyses were within the bounds of 10 CFR Part 100 and considered (1) various accidents, including loss-of-coolant accidents; (2) the radioactivity release calculated for each accident; (3) the assumed meteorological conditions; and (4) population distribution versus distance from the plant. The staff has concluded that neither the types of accidents nor the calculated radioactivity releases will change due to the proposed action. The site meteorology as defined in the UFSAR is essentially a constant. One parameter that would be dependent on the proposed action is the population size and distribution as it could vary with time; however, the projected increase in population densities, as addressed in the FES and EE, are minimal through the year 2009 and the proposed action will not significantly increase doses to the public. Due to design conservatism, maintenance and surveillance programs, inspection programs and the plant Technical Specifications, operation for the remaining life of the plant consistent with the proposed action will have no significant environmental impact.

The proposed action will not increase the probability or consequences of accidents, no changes are being made in the types of any effluents that may be released off site, and there is no significant increase in the allowable individual or cumulative occupational radiation exposure. Accordingly, the NRC staff concludes that no significant radiological environmental impacts are associated with the proposed action.

With regard to potential nonradiological impacts, the proposed action involves features located entirely within the restricted area as defined in

10 CFR Part 20. It does not, however, affect nonradiological plant effluents and has no other environmental impact. Accordingly, the staff concludes that no significant nonradiological environmental impacts are associated with the proposed action.

Alternatives to the Proposed Action

Since the Commission has concluded that no measurable environmental impacts are associated with the proposed action, any alternatives with equal or greater environmental impact need not be evaluated. As an alternative to the proposed action, the staff considered denial of the proposed action. Denial of the application would result in no change in current environmental impacts. The environmental impacts of the proposed action and the alternative action are similar.

Alternative Use of Resources

This action does not involve the use of any resources not previously considered in the Final Environmental Statement for the R.E. Ginna Nuclear Power Plant.

Agencies and Persons Consulted

In accordance with its stated policy, on April 11, 1995, the staff consulted with New York State official F. William Valentino, State Liaison Officer of the New York Energy, Research, and Development Authority, regarding the environmental impact of the proposed action. The State official had no comments.

Finding of No Significant Impact

On the basis of the environmental assessment, the staff concludes that the proposed action will not have a significant effect on the quality of the human environment. Accordingly, it has determined that it will not prepare an environmental impact statement for the proposed action.

For further details with respect to the proposed action, see the licensee's letter dated November 5, 1992, as supplemented by letter dated June 19, 1995, both of which are available for public inspection at the Commission's Public Document Room, The Gelman Building, 2120 L Street, NW., Washington, DC, and at the local public document room located at the Rochester Public Library, 115 South Avenue, Rochester, New York.

Dated at Rockville, Maryland, this 22th day of March 1996.

For the Nuclear Regulatory Commission.

Susan Frant Shankman,

Acting Director, Project Directorate I–1, Division of Reactor Projects—I/II, Office of Nuclear Reactor Regulation.

[FR Doc. 96–7530 Filed 3–27–96; 8:45 am]

BILLING CODE 7590–01–P

PACIFIC NORTHWEST ELECTRIC POWER AND CONSERVATION PLANNING COUNCIL

Northwest Conservation and Electric Power Plan Draft Amendments

AGENCY: Pacific Northwest Electric Power and Conservation Planning Council (Northwest Power Planning Council, Council).

ACTION: Notice of availability of Draft Fourth Northwest Conservation and Electric Power Plan.

SUMMARY: Following the mandate set out in the Pacific Northwest Electric Power Planning and Conservation Act of 1980 (16 U.S.C. 839 *et seq.*) (the Act), in April 1983 the Council adopted a regional power plan, the Northwest Conservation and Electric Power Plan (the plan). The plan was completely amended in 1986. Although the Act requires the Council to review the plan at least every five years, the council has taken up certain parts of the plan more often, to respond to ongoing changes in the regional energy picture and to incorporate the most recent technology and analysis. The Council amended the plan in 1989 by publishing the 1989 Supplement to the 1986 Power Plan, updating certain technical data. In April 1991, the Council adopted another complete amendment of the plan. In March 1966, the Council released for public comment the Draft Fourth Power Plan. Hearings in each of the four Northwest states will be scheduled during the comment period, as required by the Act.

SUPPLEMENTARY INFORMATION: The electricity industry nationwide is undergoing a radical restructuring. To ensure that the four Northwest states have a say in how this restructuring affects the region, the governors of these states have convened a ''Comprehensive Review of the Northwest Energy System.'' A steering committee has been appointed to study the power system and to make recommendations about its future.

In light of this review, the Council's draft Power Plan has taken a different approach from that of earlier plans. The 1991 Power Plan, for example, had as its theme: ''a time for action.'' In contrast, this draft plan focuses on ''Northwest Power in Transition: Issues and Opportunities.'' The draft has few policy determinations or recommended actions. Instead, it is designed to serve as a guidebook for the regional review. It has background on the industry and analysis of the major issues that must be addressed as the Northwest moves into a new energy future. Its goals reflects that of the governors in convening the regional review: to develop, through a public process, recommendations for changes in the institutional structure of the region's electric utility industry. The resulting system, the governors said, should ''protect the region's natural resources and distribute equitably the costs and benefits of a more competitive marketplace'' while still ensuring the region of ''an adequate, efficient, economical and reliable power system,'' in the words of the Northwest Power Act.

This draft plan meets the requirements of the Northwest Power Act, which specifies what components the plan is to have. The Act requires the plan to include a number of elements, including, but not limited to, an energy conservation program, a recommendation for research and development; a methodology for determining quantifiable environmental costs and benefits; a twenty year demand forecast; a forecast of power resources that the Bonneville Power Administration will need to meet its obligations, an analysis of reserve and reserve reliability requirements; and a surcharge methodology. The plan also includes the Council's Fish and Wildlife Program, developed pursuant to other procedural requirements under the Act.

Because of exceptional circumstances in the industry and in light of the ongoing comprehensive review of the region's energy system, the Council has adopted an extended public comment period for this draft plan. Close of comment for written comments if 5:00 P.M., Friday, March 14, 1997. The Council may hold consultations through March 28, 1997.

FOR FURTHER INFORMATION CONTACT: If you would like a copy of the Draft Fourth Power Plan, please contact the Council's Central Office and ask for Document Number 96–5. The Council's address is 851 S.W. 6th Avenue, Suite 1100, Portland, Oregon 97204. The Council's telephone numbers are: (503) 222–5161 and (toll free) (800) 222–3355. The Council's FAX number is (503) 795–3370.

If you are submitting comments on the draft plan, please note prominently that you are commenting on Council Document Number 96–5. Comments may be submitted by mail, by facsimile

transmission (FAX), or by electronic mail at comments@nwppc.org.

Stephen L. Crow,

Executive Director.

[FR Doc. 96–7586 Filed 3–27–96; 8:45 am]

BILLING CODE 0000–00–M

SECURITIES AND EXCHANGE COMMISSION

Proposed Collection; Comment Period

Upon Written Request, Copies Available From: Securities and Exchange Commission, Office of Filings and Information Services, Washington, DC 20549

Extension:

Form F–9—SEC File No. 270–333—OMB Control No. 3235–0377

Form F–10—SEC File No. 270–334—OMB Control No. 3235–0380

Regulation S–T—SEC File No. 270–375—OMB Control No. 3235–0424

Notice is hereby given that pursuant to the Paperwork Reduction Act of 1995 (44 U.S.C. 3501 *et seq.*), the Securities and Exchange Commission (''Commission'') is publishing the following summaries of collections for public comment.

Form F–9 is used to register investment grade debt and preferred securities that are non-convertible or not convertible for at least one year under the Securities Act of 1933, by registrants incorporated or organized under the laws of Canada. This information is needed to provide full and fair disclosure to the investing public. Approximately 210 Forms F–9 will be filed annually by Canadian issuers with an aggregate annual burden hours of 420.

Form F–10 is used to register securities under the Securities Act of 1933, by any substantial issuer incorporated or organized under the laws of Canada. This information is needed to provide full and fair disclosure to the investing public. Approximately 210 Forms F–10 will be filed annually by Canadian issuers with an aggregate annual burden hours of 420.

Regulation S–T sets forth the filing requirements relating to the submission of documents in electronic format through the Electronic Data Gathering and Retrieval (EDGAR) system. While the regulation does not specifically require any information to be disclosed but rather addresses the means by which disclosure required by other forms and regulations must be filed with the Commission. For administrative purposes this Regulation has been assigned 1 burden hour.

Written comments are invited on: (a) Whether the proposed collection of information is necessary for the proper performance of the functions of the agency, including whether the information shall have practical utility; (b) the accuracy of the agency's estimate of the burden of the proposed collection of information; (c) ways to enhance the quality, utility, and clarity of the information to be collected; and (d) ways to minimize the burden of the collection of information on respondents, including through the use of automated collection techniques or other forms of information technology. Consideration will be given to comments and suggestions submitted in writing within 60 days of this publication.

Direct your written comments to Michael E. Bartell, Associate Executive Director, Office of Information Technology, Securities and Exchange Commission, 450 5th Street, NW., Washington, DC 20549.

Dated: March 21, 1996.

Jonathan G. Katz,

Secretary.

[FR Doc. 96–7539 Filed 3–27–96; 8:45 am]

BILLING CODE 8010–01–M

Submission for OMB Review; Comment Request

Upon Written Request, Copies Available From: Securities and Exchange Commission, Office of Filings and Information Services, Washington, DC 20549

Revision:

Regulation S–X—SEC File No. 270–3—OMB Control No. 3235–0009

Regulation S–K—SEC File No. 270–2—OMB Control No. 3235–0071

Notice is hereby given that pursuant to the Paperwork Reduction Act of 1995 (44 U.S.C. 3501 *et seq.*), the Securities and Exchange Commission (''Commission'') has submitted to the Office of Management and Budget proposed amendments to Rule 4–08 of Regulation S–X (17 CFR 210.4–08) and proposed Item 305 of Regulation S–K (17 CFR 229.305) to clarify certain disclosure requirements related to derivative and other financial and commodity instruments, to include additional instruments within existing disclosure requirements, and to provide alternative quantitative disclosures regarding the market risk inherent in those instruments.

Amendments to Rule 4–08 of Regulation S–X would clarify the current requirements under generally accepted accounting principles (''GAAP'') for registrants' disclosures of accounting policies related to derivative and other financial and commodity instruments, and include additional instruments within the existing accounting policy disclosures. This is considered necessary due to the general and uninformative disclosures currently being received by the Commission about such policies. Likely respondents are those registrants filing financial statements under the Securities Act of 1933, the Securities Exchange Act of 1934, the Public Utility Holding Company Act of 1935, and the Investment Company Act of 1940. Reporting should occur annually, with material modifications to the annual information disclosed in quarterly reports. It is estimated that the proposed amendments, if adopted, may result in an aggregate additional reporting burden of 11,000 hours.

Proposed Item 305 of Regulation S–K would require, to the extent material, quantitative and qualitative disclosures about market risks associated with derivative and other financial and commodity instruments. These disclosures are considered necessary to provide transparency into registrants' use of derivative and other financial and commodity instruments and the market risks inherent in those instruments, in order to reduce the number of instances where losses from such transactions ''surprise'' the securities markets. Likely respondents are those registrants filing documents under the Securities Act of 1933, the Securities Exchange Act of 1934, and the Public Utility Holding Company Act of 1935, for whom the proposed disclosures would be material to an understanding of their businesses taken as a whole. Reporting should occur annually, with material modifications to the annual information disclosed in quarterly reports. It is estimated that the proposed amendments, if adopted, may result in an aggregate additional reporting burden of 200,000 hours.

The estimated burden hours would remain unchanged for compliance with Regulation S–X [OMB Number 3235–0009] and Regulation S–K [OMB Number 3235–0071]. Instead, the estimated burden hours for Commission forms that require the filing of financial statements prepared in accordance with Regulation S–X and the information required by the standard disclosure items in Regulation S–K, would be amended to note any increase in such burdens. These forms would include Form 10–K [OMB Number 3235–0063] and Form S–1 [OMB Number 3235–0065].

General comments regarding the estimated burden hours should be directed to the Desk Officer for the Securities and Exchange Commission at the address below. Any comments concerning the accuracy of the estimated average burden hours for compliance with Commission rules and forms should be directed to Michael E. Bartell, Associate Executive Director, Office of Information Technology, Securities and Exchange Commission, 450 Fifth Street, N.W., Washington, D.C. 20549 and Desk Officer for the Securities and Exchange Commission, Office of Information and Regulatory Affairs, Office of Management and Budget, Room 3208, New Executive Office Building, Washington, D.C. 20503.

Dated: March 20, 1996.

Jonathan G. Katz,

Secretary.

[FR Doc. 96–7535 Filed 3–27–96; 8:45 am]

BILLING CODE 8010–01–M

[File No. 1–10668]

Issuer Delisting; Notice of Application to Withdraw From Listing and Registration; (Air-Cure Technologies, Inc., Common Stock, $0.001, Par Value)

March 22, 1996.

Air-Cure Technologies, Inc. (''Company'') has filed an application with the Securities and Exchange Commission (''Commission''), pursuant to Section 12(d) of the Securities Exchange Act of 1934 (''Act'') and Rule 12d2–2(d) promulgated thereunder, to withdraw the above specified security (''Security'') from listing and registration on the American Stock Exchange, Inc. (''Amex'').

The reasons alleged in the application for withdrawing the Security from listing and registration include the following:

According to the Company, it has listed the Security with the New York Stock Exchange, Inc. (''NYSE''). In making the decision to withdraw the Security from listing on the Amex, the Company considered the direct and indirect costs and expenses attendant on maintaining the dual listing of the Security on the Nasdaq National Market System and on the Amex. The Company does not see any particular advantage in the dual trading of the Security and believes that dual listing would fragment the market for its Security.

Any interested person may, on or before April 12, 1996, submit by letter to the Secretary of the Securities and Exchange Commission, 450 Fifth Street, N.W., Washington, D.C. 20549, facts bearing upon whether the application has been made in accordance with the rules of the exchanges and what terms, if any, should be imposed by the Commission for the protection of investors. The Commission, based on the information submitted to it, will issue an order granting the application after the date mentioned above, unless the Commission determines to order a hearing on the matter.

For the Commission, by the Division of Market Regulation, pursuant to delegated authority.

Jonathan G. Katz,

Secretary.

[FR Doc. 96–7504 Filed 3–27–96; 8:45 am]

BILLING CODE 8010–01–M

[Rel. No. IC–21841; 812–9952]

Connecticut Mutual Investment Accounts, Inc., et al.; Notice of Application

March 22, 1996.

AGENCY: Securities and Exchange Commission (''SEC'').

ACTION: Notice of Application for Exemption under the Investment Company Act of 1940 (the ''Act'').

APPLICANTS: Connecticut Mutual Investment Accounts, Inc. (the ''Company''), on behalf of Connecticut Mutual Liquid Account (''CM Liquid Account'') and Connecticut Mutual Government Securities Account (''CM Government Account'') (the ''Acquired Accounts''); Oppenheimer Money Market Fund, Inc. (''Oppenheimer Money Fund'') and Oppenheimer U.S. Government Trust (''Oppenheimer Government Trust'') (the ''Acquiring Funds''); Oppenheimer Funds, Inc. (''Oppenheimer''); and Massachusetts Mutual Life Insurance Company (''Massachusetts Mutual'').

RELEVANT ACT SECTIONS: Order requested under section 17(b) of the Act granting an exemption from section 17(a).

SUMMARY OF APPLICATION: Applicants request an order to permit Oppenheimer Money Fund to acquire substantially all of the assets of CM Liquid Account, and Oppenheimer Government Trust to acquire substantially all of the assets of CM Government Account. Because of certain affiliations, each Acquiring Fund and its corresponding Acquired Account may not rely on rule 17a–8 under the Act.

FILING DATES: The application was filed on January 17, 1996 and amended and restated on March 15, 1996.

HEARING OR NOTIFICATION OF HEARING: An order granting the application will be issued unless the SEC orders a hearing. Interested persons may request a hearing by writing to the SEC's Secretary and serving applicants with a copy of the request, personally or by mail. Hearing requests should be received by the SEC by 5:30 p.m. on April 16, 1996, and should be accompanied by proof of service on the applicants, in the form of an affidavit or, for lawyers, a certificate of service. Hearing requests should state the nature of the writer's interest, the reason for the request, and the issues contested. Persons who wish to be notified of a hearing may request notification by writing to the SEC's Secretary.

ADDRESSES: Secretary, SEC, 450 Fifth Street, NW., Washington, DC 20549. Applicants: The Company, CM Liquid Account, and CM Government Securities Account, 140 Garden Street, Hartford, Connecticut 06154; Oppenheimer Money Fund, Oppenheimer Government Trust, and Oppenheimer, Two World Trade Center, New York, New York 10048; and Massachusetts Mutual, 1295 State Street, Springfield, Massachusetts 01111.

FOR FURTHER INFORMATION CONTACT: Mary Kay Frech, Senior Attorney, at (202) 942–0579, or Alison E. Baur, Branch Chief, at (202) 942–0564 (Office of Investment Company Regulation, Division of Investment Management).

SUPPLEMENTARY INFORMATION: The following is a summary of the application. The complete application may be obtained for a fee at the SEC's Public Reference Branch.

Applicants' Representations

1. The Company is a Maryland corporation registered under the Act as an open-end management investment company. The Company currently offers thirteen series of shares, including the Acquired Accounts.

2. Oppenheimer Government Trust is a Massachusetts business trust registered under the Act as an open-end management investment company. Oppenheimer Money Fund is a Maryland corporation registered under the Act as an open-end management investment company. Oppenheimer is the investment adviser to each Acquiring Fund.

3. On March 1, 1996, pursuant to the terms of an Agreement and Plan of Merger, Connecticut Mutual merged with and into Massachusetts Mutual (the ''Life Company Merger''). Subsequent to the Life Company Merger and effective March 1, 1996, Oppenheimer became the investment adviser to the Acquired Accounts

pursuant to the terms of new investment management agreements, which were approved by the shareholders of each Acquired Account on February 14, 1996. As of March 15, 1996, Massachusetts Mutual owned approximately 50% and 14% of the outstanding voting shares of CM Liquid Account and CM Government Account, respectively.

4. CM Liquid Account and Oppenheimer Money Fund each have outstanding a single class of shares, which shares are offered without any sales charges. CM Government Account and Oppenheimer Government Trust each have outstanding two classes of shares, Class A and Class B shares.[1] CM Government Account's and Oppenheimer Government Trust's Class A shares are offered with a maximum front-end sales charge of 4.00% and 4.75%, respectively, of the offering price, and are subject to a fee imposed in accordance with rule 12b–1 under the Act at an annual rate of up to 0.25% of average net assets. CM Government Account's and Oppenheimer Government Trust's Class B shares are offered subject to a maximum contingent deferred sales charge of 5.00% and a rule 12b–1 fee. CM Government Account's Class B rule 12b–1 fee includes an asset based sales charge of up to 0.75% of average daily net assets and a service fee of up to 0.25% of average daily net assets. Oppenheimer Government Trust's Class B rule 12b–1 fee includes an asset based sales charge at an annual rate equal to 0.75% and a service fee at an annual rate of up to 0.25% of average net assets.

5. Subject to approval by the shareholders of the Acquired Accounts, applicants propose to combine CM Liquid Account with and into Oppenheimer Money Fund and CM Oppenheimer Government Account with and into Oppenheimer Government Trust (the ''Reorganizations''). Pursuant to separate Agreements and Plans of Reorganization (the ''Reorganization Agreements''), each Acquiring Fund would acquire substantially all of the assets of the corresponding Acquired Account in exchange solely for the assumption by such Acquiring Fund of certain liabilities of the corresponding Acquired Account and the issuance of Class A[2] and, if any, Class B shares of the Acquiring Fund to its corresponding Acquired Account. The Acquired Account would distribute such Class A shares to its Class A shareholders and such Class B shares to its Class B shareholders, if any, in proportion to their respective ownership of Acquired Accounts shares, and on the basis of their relative net asset value per share computed as of the close of business on the New York Stock Exchange on the business day preceding the closing date, in liquidation of the Acquired Account. Thereafter, each Acquired Account would be terminated as a series of the Company.

6. On November 17, 1995 and December 14, 1995, respectively, the board of directors of the Acquired Accounts and the boards of directors or trustees of the Acquiring Funds (collectively, the ''Boards''), including the members of the Boards who are not interested persons, found, as required by rule 17a–8 of the Act, that participation in the Reorganization is in the best interests of each Acquired Account and its corresponding Acquiring Fund and that the interests of existing fund shareholders will not be diluted as a result of the Reorganizations.

7. At the same meetings, the Boards unanimously approved the terms and conditions of the Reorganization Agreements. In doing so, the Boards considered (a) the compatibility of the investment objectives and policies of each Acquired Account and its corresponding Acquiring Fund and the disadvantages of operating and marketing each Acquired Account separately from its substantially similar Acquiring Fund; (b) the future cost savings or other advantages that could be achieved by combining an Acquired Account and its corresponding Acquiring Fund; (c) the tax-free nature of the Reorganizations; and (d) the costs associated with the Reorganizations; (e) the investment advisory and rule 12b–1 fees, and the sales charges applicable to an Acquired Account and its corresponding Acquiring Fund; and (f) the potential benefits to Oppenheimer of the transactions contemplated by the Reorganization Agreements.

8. In considering the compatibility of the funds, the respective Boards noted, among other things, that: the investment objectives and policies of each Acquired Account and its corresponding Acquiring Fund generally are similar; the existence of a competing fund within the same fund complex with substantially similar investment characteristics is likely to impede the marketing and asset growth of both funds; each Acquiring Fund has maintained lower expense ratios than the corresponding Acquired Account (before fee or expense limitations); greater diversification of an investment portfolio can be achieved than currently is possible in either the Acquired Accounts or the Acquiring Funds; former shareholders of the Acquired Accounts would remain subject to a class and expenses structure that is similar to, and, in certain respects, more advantageous than the existing expense structure for each class of the Acquired Accounts; and after the Reorganizations, the effective advisory fee rate payable as a percentage of average net assets by the former shareholders of the Acquired Accounts will decrease.

9. On February 15 and 18, 1996, applicants filed with the SEC registration statements on Form N–14 with respect to the respective Reorganizations, each containing a combined prospectus/proxy statement. Applicants intend to submit the Reorganization Agreements to the respective shareholders of the Acquired Accounts for their approval at shareholder meetings expected to be held on April 24, 1996. Massachusetts Mutual intends to vote its interests in the Acquired Accounts in favor of the respective Reorganizations.

10. Applicants agree not to make any material changes to the Reorganization Agreements that affect the application without the prior approval of the SEC. Applicants also will not waive, amend, or modify any provision of the Reorganization Agreements that is required by state or federal law in order to effect the Reorganization. Each Acquired Account's and each Acquiring Fund's Reorganization expenses will be borne by Massachusetts Mutual.

Applicants' Legal Analysis

1. Section 17(a), in pertinent part, prohibits an affiliated person of a registered investment company, or any affiliated person of such a person, acting as principal, from selling to or purchasing from such registered company, or any company controlled by such registered company, any security or other property.

2. Section 2(a)(3) provides, in pertinent part, that any person directly or indirectly owning, controlling, or holding the power to vote, 5% or more of the outstanding voting securities of such other person is an affiliated person of that person. Section 2(a)(3) further provides that the term ''affiliated person of another person'' shall include

[1] Oppenheimer Government Trust also has outstanding a third class of shares, Class C shares, which shares will not be issued in connection with the Reorganization of CM Government Account and Oppenheimer Government Trust.

[2] For ease of reference, all references to Class A shares herein include the single class of shares of each CM Liquid Account and Oppenheimer Money Fund. No Class B shares will be issued in connection with the Reorganization of CM Liquid Account and Oppenheimer Money Fund.

any investment adviser of such other person if such other person is an investment company. Under section 2(a)(9), it is presumed that an entity that owns 25% or more of the outstanding voting securities of another entity controls such other entity.

3. Rule 17a–8 exempt from the prohibitions of section 17(a) mergers, consolidations, or purchases or sales of substantially all of the assets of registered investment companies that are affiliated persons solely by reason of having a common investment adviser, common directors, and/or common officers, provided that certain conditions set forth in the rule are satisfied.

4. Contrary to the requirements of rule 17a–8, each Acquired Account may be deemed ''an affiliated person of an affiliated person'' of its corresponding Acquiring Fund for a reason other than the fact that it has a common adviser, common directors, and/or common officers. Thus, the Reorganizations may not meet the ''solely by reason of'' requirement of rule 17a–8.

5. Massachusetts Mutual holds of record more than 25% of CM Liquid Account. Massachusetts Mutual also holds of record more than 25% of the voting securities of Oppenheimer. Therefore, Massachusetts Mutual may be deemed to control both CM Liquid Account and Oppenheimer under section 2(a)(9) of the Act. CM Liquid Account and Oppenheimer may be considered affiliated persons of each other because they are under the common control of Massachusetts Mutual under section 2(a)(3) in addition to their investment advisory relationship. Oppenheimer, in turn, is an affiliated person of Oppenheimer Money Fund. Massachusetts Mutual also holds of record more than 5% of the outstanding voting securities of CM Government Account. Because of this 5% ownership, CM Government Account might be deemed an affiliated person of Massachusetts Mutual under section 2(a)(3). Massachusetts Mutual, in turn, is an affiliated person of Oppenheimer under section 2(a)(3) by virtue of their common ownership and control. Oppenheimer, in turn, is an affiliated person of CM Government Account under section 2(a)(3) by virtue of its investment advisory relationship with CM Government Account. Therefore, each Acquired Account may be deemed ''an affiliated person of an affiliated person'' of its corresponding Acquiring Fund for a reason other than having common advisers, common directors, and/or common officers.

6. Section 17(b) provides that the SEC may exempt a transaction from the provisions of section 17(a) if evidence establishes that the terms of the proposed transaction, including the consideration to be paid, are reasonable and fair and do not involve overreaching on the part of any person concerned, and that the proposed transaction is consistent with the policy of the registered investment company concerned and with the general purposes of the Act.

7. Applicants believe, consistent with the standards set forth in section 17(b), that the terms of the Reorganizations, including the consideration to be paid or received, are fair and reasonable and do not involve overreaching on the part of any person concerned. The Boards have reviewed the terms of each Reorganization, including the consideration to be paid or received, and have found that participation in the Reorganizations is in the best interest of each Acquired Account and its corresponding Acquiring Fund and that the interests of existing shareholders of such funds will not be diluted as a result of any Reorganization. Applicants further believe that the Reorganizations are consistent with the policies of the Acquired Accounts and the Acquiring Funds and that the Reorganizations, if undertaken in the manner described in the application, are consistent with the purposes of the Act.

8. Applicants believe that the terms and conditions of the Reorganizations are consistent with the provisions, policies, and purposes of the Act in that they are reasonable and fair to all parties, do not involve overreaching, and are consistent with the investment policies of each of the Acquiring Funds and Acquired Accounts.

For the Commission, by the Division of Investment Management, under delegated authority.

Jonathan G. Katz,

Secretary.

[FR Doc. 96–7542 Filed 3–27–96; 8:45 am]

BILLING CODE 8010–01–M

[Rel. No. IC–21839/812–9886]

Dreyfus Massachusetts Municipal Money Market Fund, et al.; Notice of Application

March 21, 1996.

AGENCY: Securities and Exchange Commission (''SEC'').

ACTION: Notice of Application for Exemption under the Investment Company Act of 1940 (the ''Act'').

APPLICANTS: Dreyfus Massachusetts Municipal Money Market Fund (the ''Acquiring Fund'') and The Dreyfus/Laurel Tax-Free Municipal Fund (the ''Trust'').

RELEVANT ACT SECTIONS: Order requested under section 6(c) of the Act that would exempt applicants from section 12(d)(1) of the Act, under section 17(b) of the Act for an exemption from section 17(a) of the Act, and under section 17(d) of the Act and rule 17d–1 thereunder permitting certain joint transactions.

SUMMARY OF APPLICATION: Applicants request an order to permit the combination of one class (the ''Investor shares'') of the Dreyfus/Laurel Massachusetts Tax-Free Money Fund (the ''Transferring Fund''), a series of the Trust, and the existing single class of the Acquiring Fund. The Transferring Fund thereafter would operate as a single class fund offering its other existing class of shares (the ''Class R shares'').

FILING DATE: The application was filed on November 30, 1995 and amended on March 5, 1996.

HEARING OR NOTIFICATION OF HEARING: An order granting the application will be issued unless the SEC orders a hearing. Interested persons may request a hearing by writing to the SEC's Secretary and serving applicant with a copy of the request, personally or by mail. Hearing requests should be received by the SEC by 5:30 p.m. on April 15, 1996, and should be accompanied by proof of service on applicant, in the form of an affidavit or, for lawyers, a certificate of service. Hearing requests should state the nature of the writer's interest, the reason for the request, and the issues contested. Persons who wish to be notified of a hearing may request notification by writing to the SEC's Secretary.

ADDRESSES: Secretary, SEC, 450 Fifth Street, NW., Washington, DC 20549. Applicants, 200 Park Avenue, New York, New York 10166.

FOR FURTHER INFORMATION CONTACT: David W. Grim, Staff Attorney, at (202) 942–0571, or Robert A. Robertson, Branch Chief, at (202) 942–0564 (Division of Investment Management, Office of Investment Company Regulation).

SUPPLEMENTARY INFORMATION: The following is a summary of the application. The complete application may be obtained for a fee at the SEC's Public Reference Branch.

Applicants' Representations

1. The Acquiring Fund is a business trust organized under the laws of the Commonwealth of Massachusetts. The Acquiring Fund is registered under the Act as an open-end management

investment company and offers a single class of its shares. The Acquiring Fund operates as a money market fund complying with rule 2a–7 under the Act, and seeks to provide a high level of current income exempt from federal and Massachusetts income taxes to the extent consistent with the preservation of capital and the maintenance of liquidity.

2. The Transferring Fund is one of seven series of the Trust, a business trust organized under the laws of Massachusetts and registered under the Act as an open-end management investment company. The Transferring Fund operates as a money market fund complying with rule 2a–7 under the Act, and seeks to provide a high level of current income exempt from federal income taxes and Massachusetts personal income taxes for resident shareholders of Massachusetts. The Transferring Fund issues two classes of shares, Investor shares and Class R shares, and operates as a multiple class fund under a plan adopted pursuant to rule 18f–3 under the Act. Investor shares and Class R shares are identical, except as to the services offered and the expenses borne by each class. Investor shares are sold primarily to retail investors, while Class R shares are sold primarily to bank trust departments and other financial service providers.

3. The Dreyfus Corporation (''Dreyfus'') serves as the investment adviser to the Acquiring Fund and the Transferring Fund. Dreyfus is a wholly-owned subsidiary of Mellon Bank, N.A. (''Mellon Bank''), which in turn is a wholly-owned subsidiary of Mellon Bank Corporation (''Mellon'').

4. The Acquiring Fund and the Trust, on behalf of the Transferring Fund, have entered into an Agreement and Plan of Reorganization dated as of November 1, 1995 (the ''Plan''), to effectuate a proposed reorganization (the ''Reorganization''). Under the Plan, the Acquiring Fund will acquire a portion of the Transferring Fund's assets having a value equal to the aggregate net asset value of the Investor shares of the Transferring Fund at noon on the closing date, presently expected to occur on or about May 8, 1996 (the ''Closing Date''). The assets will be transferred at 4 p.m. on the Closing Date and will consist of as nearly a *pro rata* portion of each asset of the Transferring Fund as is reasonably practicable. In exchange for such assets, the Transferring Fund will receive shares of the Acquiring Fund having an aggregate value at noon on the Closing Date equal to the value of the assets transferred. As soon after the closing as is conveniently possible, the Transferring Fund will redeem the Investor shares held of a record as of noon on the Closing Date by distributing in kind *pro rata* to holders of such Investor shares the shares of the Acquiring Fund received by the Transferring Fund in the Reorganization.

5. Prior to the Closing Date, the Transferring Fund will endeavor to discharge all of its known liabilities and obligations attributable to Investor shares. In addition, at the closing the Acquiring Fund and the Transferring Fund will enter into an agreement whereby the Acquiring Fund will same that portion of unknown or contingent liabilities, and acquire that portion of unknown or contingent assets, of the Transferring Fund proportionate to the aggregate net asset value of all Investor shares compared to the aggregate net asset value of all shares of the Transferring Fund (the ''Supplemental Agreement''). The Supplemental Agreement will cover unknown or contingent assets or liabilities at noon on the Closing Date that are identified within one year of the Closing Date.

6. the Plan was unanimously approved by the Board of trustees of the Acquiring Fund, including the non-interested trustees, on November 1, 1995, and by the board of trustees of the Trust, including the independent trustees, on October 25, 1995.

7. In assessing the Reorganization and the terms of the Plan, the factors considered by the board of the Acquiring Fund included: (a) the future prospects of the Fund, both under circumstances where it does not acquire assets of the Transferring Fund and where it does acquire such assets; (b) the compatibility of the investment objectives, policies and restrictions of the Acquiring Fund and the Transferring Fund; (c) the expected favorable impact of the Reorganization on the expense ratios of the Acquiring Fund, potential future cost savings and economies of sale, and the commitment by Dreyfus to limit total expenses of the Acquiring Fund, for a period of one year following the Reorganization, to .60% of average daily net assets; (d) the fact that, although the Reorganization will constitute a taxable transaction, it will have no adverse tax impact on the Acquiring Fund; and (e) the fact that the expenses associated with the Reorganization would be borne by Dreyfus.

8. In making such an assessment with respect to the Transferring Fund, the board of the Trust considered a number of factors, including the anticipated impact of the Reorganization on both Investor and Class R shareholders of the Transferring Fund. The factors included: (a) the future prospects of both Funds, both under circumstances where the Reorganization occurred and where it did not; (b) the compatibility of the investment objectives, policies and restrictions of the Acquiring Fund and the Transferring Fund; (c) the effect of the Reorganization on the expense ratios borne by holders of Investor shares; (d) the relative performance of the Funds; (e) whether any future efficiencies in operations could be achieved by the Reorganization; (f) the fact that, although the Reorganization will constitute a taxable transaction, it will have no adverse tax impact on the Acquiring Fund; (g) the fact that the expenses associated with the Reorganization would be borne by Dreyfus; and (h) alternatives to the Reorganization.

9. Consummation of the Reorganization is contingent upon receipt of the affirmative vote of the holders of at least a majority of the outstanding shares of the Transferring Fund and of each class of the Transferring Fund. This vote will take place at a meeting of the shareholders of the Transferring Fund, expected to be held on April 16, 1996. In addition to shareholder approval, the consummation of the reorganization is conditioned upon receipt from the SEC of the order requested herein.

Applicants' Legal Analysis

1. Section 12(d)(1)(A) of the Act places limitations on the ability of a registered investment company to acquire the securities of any other investment company and on the ability of any investment company to acquire the securities of a registered investment company. Section 12(d)(1)(B) of the Act similarly limits the ability of a registered open-end investment company or certain other persons to sell its securities to another investment company. The proposed Reorganization may be viewed as technically violating section 12(d)(1) even though the Transferring Fund will own the securities of the Acquiring Fund for only a momentary period of time. At the moment that the Transferring Fund transfers to the Acquiring Fund the portion of the assets of the Transferring Fund having a value equal to the aggregate net asset value of the Investor shares, the Transferring Fund will hold shares of the Acquiring Fund in excess of the limitations of section 12(d)(1).

2. Section 12(d)(1)(D) of the Act excepts from the restrictions otherwise imposed by section 12(d)(1) any securities received as a result of a plan of reorganization of a company. Although the transaction is the type

contemplated by section 12(d)(1)(D), it technically does not qualify as a ''reorganization,'' as that term is defined in section 2(a)(33) of the Act, thereby rendering section 12(d)(1)(D) unavailable.

3. Section 6(c) provides that the SEC may exempt any person or transaction from any provision of the Act or any rule thereunder to the extent that such exemption is necessary or appropriate in the public interest and consistent with the protection of investors and the purposes fairly intended by the policy and provisions of the Act.

4. Applicants submit that the requested exemption from section 12(d)(1) meets the section 6(c) standards. Section 12(d)(1) was intended to mitigate or eliminate actual or potential abuses which might arise when one investment company acquires shares of another investment company. These abuses include the acquiring fund imposing undue influence over the management of the acquired funds through the threat of large-scale redemptions, the acquisition by the acquiring company of voting control of the acquired company, the layering of sales charges, advisory fees, and administrative costs, and the creation of a complex pyramidal structure which may be confusing to investors. The Reorganization implicates none of these concerns. The Transferring Fund's ownership of the Acquiring Fund's shares will exist for only an instant, as the Transferring Fund will only hold such shares in order to use those shares to redeem in kind the Investor shares of the Transferring Fund. The Transferring Fund will not have the opportunity to redeem, to vote, or to take other action with respect to the Acquiring Fund's shares, and will hold the shares for only a brief period during which neither their value nor the layering of fees could be an issue. Furthermore, the Reorganization is similar to the types of transactions that Congress specifically exempted from section 12(d)(1) through the enactment of subsection (D) thereof.

5. Section 17(a) of the Act, in pertinent part, prohibits an affiliated person of a registered investment company, acting as principal, from selling to or purchasing from such registered company, any security or other property. Section 17(b) provides that the SEC may exempt a transaction from section 17(a) if evidence establishes that the terms of the proposed transaction, including the consideration to be paid or received, are reasonable and fair and do not involve overreaching on the part of any person concerned, and that the proposed transaction is consistent with the policy of the registered investment company concerned and with the general purposes of the Act.

6. Rule 17a–8 under the Act exempts from the prohibitions of section 17(a) mergers, consolidations, or purchases or sales of substantially all the assets involving registered investment companies that may be affiliated persons solely by reason of having a common investment adviser, common directors/trustees and/or common officers provided that certain conditions are satisfied.

7. The proposed reorganization may not be exempt from the prohibitions of section 17(a) by reason of rule 17a–8. Under the proposed Reorganization, the Transferring Fund will transfer to the Acquiring Fund all of that portion of the assets of the Transferring Fund having a value equal to the aggregate net asset value of the Investor shares, but will not transfer that portion of the assets of the Transferring Fund representing the aggregate net asset value of the Class R shares. Therefore, the proposed Reorganization technically may not be a merger, consolidation, or purchase or sale of substantially all of the assets involving registered investment companies under rule 17a–8. In addition, Mellon, directly or through subsidiaries, holds with power to vote approximately 63% of the Class R shares of the Transferring Fund. As a result, the Transferring Fund would be deemed to be an affiliated person of Mellon and, arguably, of Dreyfus as its wholly-owned subsidiary. Therefore, the Transferring Fund may be deemed an affiliated person of an affiliated person of the Acquiring Fund for reasons not based solely on their common adviser.

8. Applicants believe that the terms of the reorganization satisfy the standards of section 17(b). Each Fund's board, including the non-interested trustees, has reviewed the terms of the Reorganization and have found that participation in the Reorganization as contemplated by the Plan is in the best interests of the respective Fund, and that the interests of existing shareholders of each Fund will not be diluted as a result of the Reorganization. Each Fund's board, including its non-interested trustees, also has concluded that any potential benefits to Dreyfus, Mellon, and their affiliates as a result of the Reorganization are on balance not inappropriate in light of the commitments of Dreyfus to bear the expenses of the Reorganization and to limit total fees of the Acquiring fund to .60 of 1% of average daily net assets for a period of one year following the Reorganization,the potential benefits of the Reorganization to each Fund and its shareholders, and all applicable factors. The investment objectives of the Acquiring Fund, moreover, are consistent with those of the Transferring Fund. Accordingly, the Reorganization will be consistent with the policies of each Fund.

9. Section 17(d) prohibits any affiliated person of a registered investment company, acting as principal, from effecting any transaction in which such registered investment company is a joint participant with such person in contravention of SEC rules and regulations. Rule 17d–1 provides that no joint transaction may be consummated unless the SEC approves the transaction after considering whether the participation of the investment company is consistent with the provisions, policies, and purposes of the Act and the extent to which the participation is on a basis different from or less advantageous than that of other participants.

10. The Supplemental Agreement between the Acquiring Fund and the Transferring Fund could be characterized as a joint enterprise or transaction within the meaning of section 17(d) and rule 17d–1 thereunder. The Supplemental Agreement provides that the holders of the respective Class R shares and the Investor shares of the Transferring Fund, and of shares of the Acquiring Fund, are treated equitable by allocating the unknown or contingent assets and liabilities of the Transferring Fund between the parties of the Reorganization. Applicants submit that the Supplemental Agreement thus meets the standards of rule 17d–1.

For the Commission, by the Division of Investment Management, under delegated authority.

Jonathan G. Katz,

Secretary.

[FR Doc. 96–7502 Filed 3–27–96; 8:45 am]

BILLING CODE, 8010–01–M

[Rel. No. IC–21840; File No. 812–9942]

GNA Variable Investment Account, et al.

March 22, 1996.

AGENCY: Securities and Exchange Commission (the ''SEC'' or the ''Commission'').

ACTION: Notice of Application for an order under the Investment Company Act of 1940 (the ''1940 Act'').

APPLICANTS: GNA Variable Investment Account (the ''Account''), and Great

Northern Insured Annuity Corporation (''GNA'').

RELEVANT 1940 ACT SECTIONS: Order requested under Section 26(b) of the 1940 Act.

SUMMARY OF APPLICATION: Applicants seek an order permitting the substitution of certain securities held by the Account.

FILING DATE: The application was filed on January 16, 1996, and amended on March 12, 1996.

HEARING OR NOTIFICATION OF HEARING: An order granting the application will be issued unless the Commission orders a hearing. Interested persons may request a hearing on this application by writing to the Secretary of the SEC and serving Applicants with a copy of the request, personally or by mail. Hearing requests must be received by the Commission by 5:30 p.m. on April 16, 1996, and should be accompanied by proof of service on Applicants in the form of an affidavit or, for lawyers, a certificate of service. Hearing request should state the nature of the writer's interest, the reason for the request, and the issues contested. Persons may request notification of a hearing by writing to the Secretary of the SEC.

ADDRESSES: Secretary, Securities and Exchange Commission, 450 Fifth Street, N.W., Washington, D.C. 20549. Applicants, J. Neil McMurdie, Esq., Associate Counsel and Assistant Vice-President, Great Northern Insured Annuity Corporation, Two Union Square, Ste. 5600, Seattle, Washington 98111–0490.

FOR FURTHER INFORMATION CONTACT: Patrice M. Pitts, Special Counsel, Office of Insurance Products (Division of Investment Management), at (202) 942–0670.

SUPPLEMENTARY INFORMATION: Following is a summary of the application. The complete application is available for a fee from the Commission's Public Reference Branch.

Applicant's Representations

1. GNA is a stock life insurance company organized under Washington law 1980. GNA is a wholly-owned subsidiary of General Electric Capital Assurance Company, a wholly-owned subsidiary of GNA Corporation, which is a wholly-owned subsidiary of General Electric Capital Corporation.

2. GNA established the Account under Washington law in 1981 to fund variable annuity contracts. The Account is registered with the Commission under the 1940 Act as a unit investment trust. The assets of the Account are divided into twelve subaccounts (each a ''Subaccount''), each of which invests in shares of one of twelve designated portfolios of three registered open-end investment companies. Under certain prescribed circumstances, and with notice to Participants (defined below) and subject to regulatory approval, GNA may transfer assets held in one Subaccount to another Subaccount.

3. There are two outstanding series of registered variable annuity contracts (''Contracts'') participating in the Account. Each Contract is a group allocated contract designed for use in connection with qualified and non-qualified retirement plans. Each person or entity participating under a contract (''Participant'') is issued a certificate which states a Participant's rights under the Contract.

4. The Power Portfolio Variable Annuity Contract (the ''Power Contract'') is designed for a group consisting of clients of a broker-dealer or financial institution, or any other organized group acceptable to GNA. Participants under this contract may allocate certificate values among eight variable investment options: the GNA Growth Portfolio, the GNA Value Portfolio, the GNA Government Portfolio, and the GNA Adjustable Rate Portfolio of GNA Variable Series Trust; and the GE Fixed Income Portfolio, the GE International Equity Portfolio, the GE U.S. Equity Portfolio and the GE Money Market Portfolio of Variable Investment Trust.

5. The Paragon Power Portfolio Variable Annuity Contract (''Paragon Contract'') is designed for a group consisting of customers of banks or bank affiliates that are subsidiaries of Premier Bancorp, Inc. (''Premier''). The only outstanding Paragon Contract was issued to GNA Securities, Inc. Participants under the Paragon Contract are entitled to allocate certificate values among nine variable investment options: the GNA Growth Portfolio, the GNA Government Portfolio and the GNA Adjustable Rate Portfolio of GNA Variable Series Trust; the GE International Equity Portfolio and the GE Money Market Portfolio of Variable Investment Trust; and the Paragon Power Intermediate-Term Bond Portfolio, the Paragon Power Value Growth Portfolio, the Paragon Power Value Equity Income Portfolio, and the Paragon Power Gulf South Growth Portfolio (collectively, the ''Portfolios'') of Paragon Portfolio (the ''Trust''), a registered management investment company.

6. Premier Investment advisers, L.L.C., an indirect subsidiary of Premier, served as investment adviser of the Portfolios. On January 1, 1996, Premier merged with and into a subsidy of Banc One Corporation (''Banc One''), an Ohio bank holding company. The merger resulted in the automatic termination of the investment advisory arrangements between Premier Investment Advisers L.L.C. and the Trust. In anticipation of this effect of the merger, the trustees of the Trust approved a new investment advisory agreement with Banc One Investment Advisers Corporation (''BOIA''), an indirect wholly-owned subsidiary of Banc One, on October 31, 1995. The shareholders of each portfolio of the Trust approved the new investment advisory agreement on December 20, 1995, and the agreement took effect on January 2, 1996.

7. BOIA has notified the Trust that it does not intend to provide investment advisory services to the Portfolios over the long term. OIA notified GNA that the trustees of the Trust determined at their October 31, 1995 meeting that, following the merger of premier and Banc One, the Trust would not longer offer shares of the Portfolios as funding options for the Paragon Contract. BOIA advised GNA to take any actions necessary to substitute alternative investment options for the Portfolios.

8. In light of the contemplated termination of the Portfolios, GNA has restricted additional investment in the Portfolios and provided alternative investment options to present Paragon Contract Participants. On December 11, 1995, GNA notified those present Paragon Contract Participants that, on or after that date: (i) The Portfolios would cease to be investment options under the Contracts; (ii) no purchase payments from present or future Paragon Contract Participants could be allocated to the Portfolios; and (iii) present Paragon Contract Participants could not transfer their account value to the Subaccounts corresponding to the Portfolios. The notification stated that GNA was seeking an order from the Commission to permit GNA to substitute shares of the GE Money Market Portfolio of the Variable Investment Trust for shares of the Portfolios. Pending receipt of the order, transfers would be permitted from the Subaccounts corresponding to the Portfolios at any time, without the assessment of a $25 charge that might otherwise apply. GNA advised Paragon Contract Participants that certificate values invested in the Portfolios before December 11, 1995, could remain so invested until the order requested herein has been granted.

9. On December 11, 1995, GNA commenced an offer to Paragon Contract Participants to exchange certificates under the Power Contract for certificates

under the Paragon Contract.[1] This exchange would make available to Paragon Contract Participants three additional investment options: the GNA Value Portfolio of GNA Variable Series Trust; and the GE Fixed Income Portfolio and the GE U.S. Equity Portfolio of the Variable Investment Trust. A description of the new investment options was provided to Paragon Contract Participants by the prospectuses for the applicable portfolios.

10. Following such an exchange, a former Paragon Contract Participant may reallocate his or her certificate value among the Subaccounts available to Power Contract Participants. Any such reallocation will not be subject to any applicable transfer charge, and any such reallocation and any transfers made under the Paragon Contract in the certificate year prior to the exchange will not be counted as a transfer under the Power Contract so as to limit the number of free transfers per certificate year. Moreover, the exchange will be made without the assessment of any withdrawal charge or market value adjustment provided for the Power Contract, and no charge will be made for effecting the exchange.

11. Upon receipt of SEC approval of the proposed substitution, GNA proposes to transfer any certificate values remaining in the Subaccounts investing in the Portfolios to the Subaccount investing in the GE Money Market Portfolio of the Variable Investment Trust. After that transfer by GNA, the Paragon Contract Participants may transfer amounts allocated to the Subaccount holding shares of the GE Money Market Portfolio to other Subaccounts to the extent permitted under the terms of the Paragon Contract. Neither the transfer (by GNA) of certificate value to the Subaccount investing in the GE Money Market Portfolio, nor the first transfer of certificate value made by an affected Participant thereafter will be subject to any applicable transfer charge or be counted as a transfer so as to limit the number of free transfers per certificate year.

12. The investment objective of the GE Money Market Portfolio is to seek a high level of current income consistent with the preservation of capital and maintenance of liquidity, by investing in a defined group of short-term, U.S. dollar denominated money market instruments. GNA contends that, as the most conservative investment option avalable, the GE Money Market Portfolio is an appropriate substitute for Participants' interests in the Portfolios until such time as those Participants make an affirmative investment decision through the exercise of the transfer or exchange rights available to them.

13. The expense levels of an investment in the GE Money Market Portfolio are favorable to Participants. The GE Money Market Portfolio pays an investment advisory fee at an annual rate of 0.25% and an administration fee at an annual rate of 0.05%. Because of an expense reimbursement arrangement, current total annual expenses of the GE Money Market Portfolio amount to 0.50% of the portfolio's average net assets. In contrast, the management fees of the Paragon Power Intermediate-Term Bond Portfolio and the three other Portfolios are 0.50% and 0.65%, respectively, and total annual expenses were estimated to be 0.75% and 1.00%, respectively, as a percent of average net assets.

14. The proposed transfer of certificate values to the Subaccount investing in the GE Money Market Portfolio will be made in the same manner as any other transfer among Subaccounts, except that no transfer charge otherwise applicable will be assessed. On the date of transfer, shares remaining in the relevant Subaccounts will be redeemed and the cash proceeds thereof will be applied to the purchase of shares of the GE Money Market Portfolio, in each case at net asset value determined in accordance with the requirements of Rule 22c–1 under the 1940 Act. No costs of the substitution of shares of the GE Money Market Portfolio for shares of the Portfolios will be borne by Participants. Moreover, GNA opines that there will be no adverse tax consequences to Participants as a result of the proposed transfer of certificate values.

15. Applicants represent that, on February 22, 1996, certificate values allocated to the Paragon Power Intermediate-Term Bond Portfolio, the Paragon Power Value Growth Portfolio, the Paragon Power Value Equity Income Portfolio, and the Paragon Power Gulf South Growth Portfolio constituted 26.1%, 22.1%, and 17.6% of the total assets of those Portfolios. Under the circumstances, Applicants anticipate that the incidental brokerage costs necessary to effect redemptions from the Portfolios will be insignificant.

Applicants' Legal Analysis

1. Section 26(b) of the 1940 Act prohibits the depositor or trustee of a registered unit investment trust holding the security of a single issuer from substituting another security for such security unless the Commission has approved the substitution. Section 26(b) provides that the Commission will approve a substitution if it is consistent with the protection of investors and the purposes fairly intended by the policy and provisions of the 1940 Act.

2. Applicants submit that the proposed substitution is in the best interests of Paragon Contract Participants. Applicants state that the proposal is being made to protect the interests of the Participants in light of actions beyond the control of Applicants. If Applicants do not force Paragon Contract Participants out of the Subaccounts investing in the Portfolios, those Subaccounts, upon the termination of the Portfolios, will end up holding the liquidation proceeds or other consideration that may be received as a result of such termination.

3. Applicants represent that GNA selected the GE Money Market Portfolio as the investment option to which the involuntary transfers should be made because of the relative safety of an investment in that portfolio. Applicants assert that, as the most conservative investment option available, the GE Money Market Portfolio is an appropriate substitute for Paragon Contract Participants' interests in the Portfolios until those Participants make an affirmative investment decision through the exercise of the transfer or exchange rights available to them. Moreover, applicants state that the expense levels of an investment in the GE Money Market Portfolio are favorable to affected Participants.

4. Applicants represent that, in connection with the proposed substitution, GNA is offering Paragon Contract Participants a variety of alternative investment options which are reasonably comparable to each of the Portfolios being eliminated. In this regard, Applicants represent that: the GNA Government Portfolio and the GNA Adjustable Rate Portfolio, presently available to Paragon Contract Participants, each have investment objectives similar to those of the Paragon Power Intermediate-Term Bond Portfolio that is being eliminated; and the GNA Growth Portfolio, presently available to Paragon Contract Participants, has investment objectives similar to those of the Paragon Power Value Growth Portfolio and the Paragon Power Gulf South Growth Portfolio that are being eliminated. Applicants further represent that Participants who opt to exchange a Paragon Contract for a Power Contract will have available as investment options, not only the GNA Government Portfolio, the GNA

[1] Applicants represent that the exchange is being made in compliance with Rule 11a–2 under the 1940 Act.

Adjustable Rate Portfolio, and the GNA Growth noted above, but also the GE Fixed Income Portfolio, the GNA Value Portfolio, and the GE U.S. Equity Portfolio, which have investment objectives similar to the Portfolios being eliminated.

5. Applicants assert that, notwithstanding the availability of investment options with more comparable investment objectives than the GE Money Market Portfolio, GNA takes the position that it is preferable to have Paragon Contract Participants make an affirmative election of the investment options funding their certificate values rather than have GNA make that election for them.

6. Applicants also assert that, even where the investment objectives of alternative investment options are reasonably comparable, differences in the level of portfolio operating expenses may make the choice among available investment options less than clear-cut. Applicants submit that Paragon Contract Participants with certificate values invested in the Paragon Power Value Growth Portfolio, the Paragon Power Value Equity Income Portfolio, or the Paragon Power Gulf South Growth Portfolio could choose among other growth portfolios with either higher (in the case of the GNA Growth Portfolio or the GNA Value Portfolio) or lower (in the case of the GE U.S. Equity Portfolio) estimated operated expenses. Likewise, Paragon Contract Participants with certificate values invested in the Paragon Power Intermediate-Term Bond Portfolio may choose among income portfolios with higher (in the case of GNA Government Portfolio), the same (in the case of GE Fixed Income Portfolio), or lower (in the case of GNA Adjustable Rate Portfolio) estimated operating expenses. Applicants submit that a choice among investment options with varying expense levels is more appropriately made by the affected Paragon Contract Participants than by GNA.

7. Applicants submit that Section 26(b) of the 1940 Act was intended to provide for Commission scrutiny of proposed substitutions which could, in effect, force shareholders dissatisfied with the substituted security to redeem their shares, thereby possibly incurring either a loss of the sales load deducted from initial purchase payments, an additional sales load upon reinvestment of the proceeds of redemption, or both. Applicants further submit that, while a Paragon Contract Participant may be dissatisfied with the proposed forced transfer of his or her certificate value to the GE Money Market Portfolio Subaccount, GNA also is giving each Participant the opportunity: to transfer Paragon Contract certificate value to any of the four remaining investment options under the Paragon Contract; or, by exchanging a Paragon Contract certificate for a Power Contract certificate, to allocate certificate value among the seven investment options available under the Power Contract. Such transfers and allocations may occur at no cost to the Participant.

Conclusion

For the reasons discussed above, Applicants submit that the proposed substitution of shares of the GE Money Market Portfolio of the Variable Investment Trust for shares of the Portfolios is consistent with the protection of investors and the purposes fairly intended by the policy and provisions of the 1940 Act.

For the Commission, by the Division of Investment Management, pursuant to delegated authority.

Jonathan G. Katz,

Secretary.

[FR Doc. 96–7540 Filed 3–27–96; 8:45 am]

BILLING CODE 8010–01–M

[Release No. 35–26497]

Filings Under the Public Utility Holding Company Act of 1935, as Amended (''Act'')

March 22, 1996.

Notice is hereby given that the following filing(s) has/have been made with the Commission pursuant to provisions of the Act and rules promulgated thereunder. All interested persons are referred to the application(s) and/or declaration(s) for complete statements of the proposed transaction(s) summarized below. The application(s) and/or declaration(s) and any amendments thereto is/are available for public inspection through the Commission's Office of Public Reference.

Interested persons wishing to comment or request a hearing on the application(s) and/or declaration(s) should submit their views in writing by April 15, 1996, to the Secretary, Securities and Exchange Commission, Washington, D.C. 20549, and serve a copy on the relevant applicant(s) and/or declarant(s) at the address(es) specified below. Proof of service (by affidavit or, in case of an attorney at law, by certificate) should be filed with the request. Any request for hearing shall identify specifically the issues of fact or law that are disputed. A person who so requests will be notified of any hearing, if ordered, and will receive a copy of any notice or order issued in the matter. After said date, the application(s) and/or declaration(s), as filed or as amended, may be granted and/or permitted to become effective.

New Century Energies, Inc., (70–8787)

New Century Energies, Inc. (''NCE''), 1225 17th Street, Denver, Colorado 80202, a Delaware corporation not currently subject to the Act, has filed an application-declaration under sections 5, 6(a), 7, 8, 9(a), 10, 13(b) and rules 43, 45, 81, 83, 87, 88, 90 and 91 thereunder.

As described in more detail below, NCE: (1) proposes to acquire, by means of the mergers described below (''Transaction''), all of the issued and outstanding common stock of Public Service Company of Colorado (''PSCo''), Southwestern Public Service Company (''SPS'') and Cheyenne Light, Fuel and Power Company (''Cheyenne''), a Wyoming public utility company and currently a wholly owned subsidiary of PSCo; (2) proposes to form a new service company subsidiary through the acquisition by NCE of all of the outstanding voting securities of New Century Services, Inc. (''NC Services''); (3) requests that NC Services and Utility Engineering Corporation (''UE'')[1] be approved as subsidiary service companies in accordance with the provisions of rule 88 of the Act; (4) requests that the terms of (a) a service agreement among NC Services and the utility subsidiaries of NCE and (b) a nonutility service agreement among NC Services and the nonutility subsidiaries of NCE be approved; (5) requests that the terms of (a) the UE service agreement among UE and the utility subsidiaries of NCE and (b) the UE nonutility service agreement among UE and the nonutility subsidiaries of NCE be approved; (6) proposes to form a new holding company subsidiary to hold NCE's interests in its nonutility subsidiaries through the acquisition by NCE of all of the outstanding voting securities of New Century Hold Co. (''NC Hold''); (7) proposes to acquire all of the outstanding voting securities of West Gas Interstate, Inc. (''WGI'');[2] (8) proposes that UE create two additional subsidiaries—(a) Utility Services,[3] and (b) Key Resource Management

[1] UE is currently a subsidiary of SPS. Following the consummation of the Transaction, UE will be an indirect subsidiary of NCE.

[2] WGI is currently a nonutility subsidiary of PSCo operating in Colorado and Wyoming which is engaged in the natural gas transmission business.

[3] NCE proposes that Utility Services would provide services related to the engineering, design and construction of cooling towers for power plants.

(''KRM'');[4] (9) seeks an exemption from the at-cost provisions of section 13(b) and rules 90 and 91 thereunder for (a) services provided to certain affiliated qualifying facilities (''QFs''), independent power projects (''IPPs''), exempt wholesale generators (''EWGs''), and foreign utility companies (''FUCOs'') by the following entities—(i) e prime, inc.,[5] (ii) KRM, (iii) NC Services, (iv) Quixx Corporation (''Quixx''),[6] (v) Quixx Power Services, Inc. (''QPS''),[7] (vi) UE, (vii) UE Carolina,[8] and (viii) Utility Services, (b) services provided by e prime to Young Gas Storage Co., Ltd.,[9] and (c) goods and services provided by PSCo which are used as components of the products and services marketed by e prime; (10) proposes that NC Hold acquire all of the issued and outstanding common stock of e prime, Natural Fuels Corporation (''Natural Fuels''),[10] and Young Gas Storage Company, Inc. (''Young Gas'') through a transfer of their common stock to NC Hold pursuant to a declaration of a dividend of their common stock to NCE and subsequent capital contribution of their common stock to NC Hold; (11) proposes that NC Hold acquire, in exchange for notes issued to SPS, all of the issued and outstanding common stock of Quixx and UE; (12) proposes that SPS acquire such notes; and (13) proposes to register with the Commission, pursuant to section 5 of the Act, as a new public-utility holding company.

PSCo is an exempt holding company, pursuant to rule 2 under section 3(a)(2) of the Act.[11] PSCo and Cheyenne are primarily engaged in providing electric and gas service in Colorado and Cheyenne, Wyoming. As of December 31, 1994, PSCo provided electric utility service to 1.1 million customers, and Cheyenne provided service to 33,000 customers in the Cheyenne area. In addition, PSCo and Cheyenne provided gas utility service to approximately 920,000 and 26,000 customers, respectively. As of December 12, 1995, there were 63,150,357 shares of PSCo common stock, par value $5.00 per share, and 2,888,652 shares of PSCo preferred stock outstanding.

On a consolidated basis, for the year ended December 31, 1994, PSCo's operating revenues were approximately $2.06 billion of which approximately $1.4 billion were derived from electric operations, $625 million from gas operations and $33 million from other operations. Consolidated assets of PSCo were approximately $4.2 billion, consisting of $2.5 billion in identifiable electric utility property, plant, and equipment and $675 million in identifiable gas utility property, plant, and equipment, and $990 million in other corporate assets.

PSCo has nine direct and indirect nonutility subsidiaries, eight of which are wholly-owned, and controlling interests in several small water and ditch companies. PSCo's nonutility companies are: e prime; Fuel Resources Development Co. which is engaged in the exploration for, and the development and production of, natural gas and oil, principally in Colorado; Green and Clear Lakes Company, which owns water rights and storage facilities for water used at PSCo's Georgetown Hydroelectric Station; Natural Fuels; PS Colorado Credit Corporation, a company that finances (factors) certain of PSCo's current assets; P.S.R. Investments, Inc., which owns and manages company owned life insurance policies on certain past and present employees, the benefits from which are to provide future funding for general corporate purposes; Young Gas; WGI; and 1480 Welton, Inc., a real estate company which own certain of PSCo's real estate interests for use in its utility business.

SPS, a New Mexico corporation, is a public utility company engaged in the generation, transmission, distribution and sale of electric energy.[12] It serves a population of approximately one million in a 52,000 square-mile area of the panhandle and south plains of Texas, eastern and southeastern New Mexico, the Oklahoma panhandle and southwestern Kansas. As of December 12, 1995 there were 40,917,908 shares of SPS common stock, par value $1.00 per share, outstanding. All shares of SPS preferred stock outstanding on that date have been redeemed or repurchased. On a consolidated basis, for the year ended August 31, 1995, SPS's operating revenues were approximately $834 million, and its total assets were approximately $1.9 billion.

SPS has two nonutility subsidiaries, UE and Quixx. Both UE and Quixx hold interests in subsidiaries and affiliates as part of their business operations.

NCE was incorporated in Delaware on August 21, 1995 to become a holding company over PSCo and SPS following the proposed merger. At present, the 200 issued and outstanding shares of NCE common stock are owned in equal parts by PSCo and SPS.

Pursuant to an Agreement and Plan of Reorganization, dated as of August 22, 1995, as amended on December 8, 1995 (''Merger Agreement''), PSCo Merger Corp.[13] will be merged with and into PSCo with PSCo continuing as the surviving corporation and SPS Merger Corp.[14] will be merged with and into SPS, with SPS as the surviving corporation. As a result of these mergers, and the declaration of a dividend by PSCo to NCE of all of the stock of Cheyenne, PSCo, SPS and Cheyenne will become operating subsidiaries of NCE, and NCE will be a

[4] NCE proposes that KRM would provide a resource database service consisting of names of people who can be dispatched to provide temporary services to various projects.

[5] e prime, inc. is a nonutility subsidiary company of PSCo described as a company which offers energy related products and services to energy-using customers and to selected segments of the utility industry.

[6] Quixx is currently a subsidiary of SPS. Quixx's primary business is investing in and developing cogeneration and energy-related projects. Quixx also holds water rights and certain other non-utility assets.

[7] QPS is a wholly owned subsidiary of Quixx which will operate and maintain generation facilities in various locations, including two cogeneration facilities in which Quixx holds an equity interest: (1) BCH Energy Limited Partnership (''BCH''), which is constructing a waste-to-energy cogeneration facility located near Fayetteville, North Carolina to provide steam to a Du Pont De Nemours & Company (''Du Pont'') plant near Fayetteville and electric power to Carolina Power & Light; and (2) Carolina Energy Limited Partnership (''Carolina Energy''), which is developing, and will own and operate solid waste fueled cogeneration facilities in Wilson and Lenoir Counties, North Carolina, which will provide steam to a Du Pont plant and will sell electric power to Carolina Power & Light.

[8] UE Carolina is currently a wholly owned nonutility subsidiary of UE which provides engineering, design and construction related services to the Carolina Energy project.

[9] Young Gas Storage Co., Ltd. is a partnership which owns and underground gas storage facility. Young Gas Storage Company, Inc., currently a subsidiary of PSCo, holds a 47.5% general partnership interest in Young Gas Storage Co., Ltd.

[10] PSCo currently owns 80% of the capital stock of Natural Fuels, a nonutility company which: sells compressed natural gas as a transportation fuel to retail markets; converts vehicles for natural gas usage; constructs fueling facilities; and sells miscellaneous fueling facility equipment.

[11] PSCo's principal executive office is located in Denver, Colorado.

[12] SPS's principal corporate office is located in Amarillo, Texas.

[13] PSCo's Merger Corp. will be incorporated under the laws of the State of Colorado prior to the consummation of the Transaction. The only authorized capital stock of PSCo Merger Corp. will be common stock, no par value and all outstanding shares will be held by NCE. PSCo Merger Corp. has not had, and prior to the closing of the Transaction will not have, any operations other than the activities contemplated by the Merger Agreement necessary to accomplish the combination of PSCo Merger Corp. and PSCo.

[14] SPS Merger Corp. will be incorporated under the laws of the State of New Mexico prior to the consummation of the Transaction. The only authorized capital stock of SPS Merger Corp. will be common stock, no par value, and all outstanding shares will be held by NCE. SPS Merger Corp. has not had, and prior to the closing of the Transaction will not have, any operations other than the activities contemplated by the Merger Agreement necessary to accomplish the combination of SPS Merger Corp. and SPS.

holding company within the meaning of the Act.

Upon consummation of the proposed transaction: (1) each issued and outstanding share of PSCo common stock, together with the appurtenant rights (other than treasury and certain other shares which will be cancelled, fractional shares and shares held by holders who dissent in compliance with Colorado law) will be converted into the right to receive one share of NCE common stock, par value $1.00 per share (''PSCo Conversion Ratio''); (2) each issued and outstanding share of SPS common stock, together with the appurtenant rights, (other than treasury and certain other shares which will be canceled, fractional shares and shares held by holders who dissent in compliance with New Mexico law) will be converted into the right to receive 0.95 of one share of NCE common stock (''SPS Conversion Ratio''); (3) each share of PSCo Merger Corp. common stock issued and outstanding prior to the transaction will be converted into the right to receive one share of common stock of PSCo as the surviving corporation; (4) each share of SPS Merger Corp. common stock issued and outstanding prior to the transaction will be converted into the right to receive one share of common stock of SPS as the surviving corporation and (5) all shares of capital stock of NCE issued and outstanding immediately prior to the transaction will be canceled. The shares of preferred stock of PSCo and SPS outstanding at the time of the consummation of the Transaction will remain preferred stock of PSCo and SPS, respectively. NCE states that the transaction is expected to be tax-free to PSCo and SPS shareholders (except as to dissenters' rights and fractional shares). Based on the capitalization of PSCo and SPS on December 1, 1995, the shareholders of PSCo and SPS would own securities representing approximately 62.0% and 38.0%, respectively, of the outstanding voting power of NCE. NCE states that the proposed merger qualifies for treatment as a pooling of interests.

Following the merger, PSCo, SPS and Cheyenne will become direct public utility subsidiaries of NCE and the nonutility subsidiaries of PSCo and SPS will become either direct or indirect nonutility subsidiaries of NCE. The Merger Agreement provides that NCE's principal corporate office will be in Denver, Colorado, with significant operating offices in Ararillo, Texas. NCE's board of directors will consist of a total of 14 directors, 8 of whom will be designated by PSCo and 6 of whom will be designated by SPS.

NCE proposes that the Commission authorize two system service companies; NC Services and UE. NC Services will be a direct subsidiary of NCE and will be incorporated in Delaware. NC Services will provide companies in the NCE system with a variety of administrative, management and support services. It is anticipated that NC Services will be staffed by a transfer of personnel from PSCo, SPS and their subsidiaries. In contrast, UE will be a subsidiary of an intermediate holding company, NC Hold (discussed below), which will hold the system's nonutility interests. UE will provide a variety of engineering, design, construction, management and other miscellaneous services to NCE system companies.

NCE states that the accounting and cost allocation methods of both NC Services and UE will comply with the Commission's standards for service companies in registered holding-company systems and that NC Services' and UE's billing system will use the Commission's ''Uniform System of Accounts for Mutual Service Companies and Subsidiary Service Companies.'' [15] Except as permitted by the Act or the Commission, and except as summarized below, all services provided by NC Services and UE to affiliated companies will be ''at-cost'' pursuant to rules 90 and 91.

NCE requests an exemption from the at-cost provisions of rules 90 and 91 in connection with the provision of services to affiliated QFs, IPPs, EWGs and FUCOs by the following companies: (1) NC Services, (2) UE, (3) KRM, (4) Utility Services, (5) UE Carolina, (6) Quixx, (7) QPS, and (8) e prime. In addition, NCE requests an exemption from rules 90 and 91 in connection with the provision of services by e prime to Young Gas Storage Co., Ltd. Finally, to facilitate e prime's marketing of certain products and services to nonaffiliates, NCE requests that PSCo be exempted from rules 90 and 91 for the sale of certain products and services to e prime.

NCE further requests authority to form a new subsidiary, NC Hold Co., which will be incorporated in Delaware, to hold certain of the NCE system's nonutility interests. At the consummation of the Transaction, all outstanding shares of NC Hold common stock will be held by NCE. NC Hold will acquire the common stock of certain of PSCo's nonutility subsidiaries via a capital contribution from NCE and will purchase the common stock of SPS's nonutility subsidiaries by issuing debt to SPS.

[15] 17 CFR Part 256 (1995).

The debt issued by NC Hold will have a twenty-year maturity and bear interest at a fixed rate, with interest payments to be made semi-annually. The interest rate will be determined at the time of issuance based on the then prevailing rate which would be charged by an unaffiliated third party. The principal will be repaid in twenty equal annual installments. NC Hold will have the option to prepay the entire obligation, including accrued and unpaid interest, at any time without any prepayment premium.

For the Commission, by the Division of Investment Management, pursuant to delegated authority.

Jonathan G. Katz,

Secretary.

[FR Doc. 96–7541 Filed 3–27–96; 8:45 am]

BILLING CODE 8010–01–M

[Investment Company Act Release No. 21851; 812–9924]

U.S. Trust Corporation, et al.; Notice of Application

March 22, 1996.

AGENCY: Securities and Exchange Commission (''SEC'').

ACTION: Notice of Application for an Order under the Investment Company Act of 1940 (the ''Act'').

APPLICANTS: U.S. Trust Corporation, United States Trust Company of New York (''U.S. Trust''), the Excelsior Institutional Trust (''Excelsior Trust''), the Excelsior Funds, Inc. (''Excelsior Funds, Inc. (''Excelsior Funds''),[1] and any registered open-end management investment company that may be advised by U.S. Trust or any entity controlling, controlled by, or under common control with U.S. Trust (together, with Excelsior Trust and Excelsior Funds, the ''Funds''), the United States Trust Company of New York Pooled Pension and Profit Sharing Trust (''CIF''), and other collective investment funds that may be sponsored by U.S. Trust which U.S. Trust in the future may decide to convert into registered open-end investment companies in the manner described below, and in which, at that time, pension plans established and maintained for the benefit of employees of U.S. Trust and its subsidiaries have invested assets.

RELEVANT ACT SECTIONS: Order requested under sections 6(c) and 17(b) of the Act exempting applicants from section 17(a)

[1] The Excelsior Funds formerly were known as the UST Master Funds, Inc. The name was changed, effective January 2, 1996, primarily for marketing purposes.

of the Act and pursuant to section 17(d) of the Act and rule 17d–1 thereunder.

SUMMARY OF APPLICATION: The requested order would permit the CIF to transfer securities to certain portfolios of the Funds in exchange for portfolio shares.

FILING DATES: The application was filed on December 29, 1995. Applicant's counsel has stated in a letter dated March 18, 1996 that an amendment, the substance of which is incorporated herein, will be filed during the notice period.

HEARING OR NOTIFICATION OF HEARING: An order granting the application will be issued unless the SEC orders a hearing. Interested persons may request a hearing by writing to the SEC's Secretary and serving applicants with a copy of the request, personally or by mail. Hearing requests should be received by the SEC by 5:30 p.m. on April 16, 1996 and should be accompanied by proof of service on applicants, in the form of an affidavit, or, for lawyers, a certificate of service. Hearing requests should state the nature of the writer's interest, the reason for the request, and the issues contested. Persons may request notification of a hearing by writing to the SEC's Secretary.

ADDRESSES: Secretary, SEC, 450 Fifth Street, NW., Washington, DC 20549. Applicants: c/o U.S. Trust Corporation, 114 West 47th Street, New York, New York 10043.

FOR FURTHER INFORMATION CONTACT: David W. Grim, Staff Attorney, at (202) 942–0571, or Alison E. Baur, Branch Chief, at (202) 942–0564 (Division of Investment Management, Office of Investment Company Regulation).

SUPPLEMENTARY INFORMATION: The following is a summary of the application. The complete application may be obtained for a fee from the SEC's Public Reference Branch.

Applicants' Representations

1. U.S. Trust is a state-chartered bank and trust company and wholly-owned subsidiary of U.S. Trust Corporation. U.S. Trust serves as trustee, investment manager, and custodian for numerous pension plan clients. The assets of some of those pension plans are invested in the CIF, which was established by U.S. Trust as an investment vehicle for employee retirement plans qualified under section 401 of the Internal Revenue Code or similar governmental plans. The CIF includes assets of pension plans for the benefit of employees of entities unaffiliated with U.S. Trust (''Other Plans'') as well as assets of pension plans for the benefit of employees of U.S. Trust and its affiliates (''Affiliated Plans'') (Other Plans and Affiliated Plans collectively referred to as ''Plans''). Each of the Affiliated Plans has a five percent or greater beneficial interest in the CIF. The assets of the CIF are invested in one or more investment funds (''CIF Portfolios'') with varying investment objectives.

2. The Excelsior Trust is a Delaware business trust registered under the Act as an open-end management investment company. The Excelsior Trust currently consists of 10 portfolios. The Excelsior Trust is establishing two new portfolios, the Excelsior Trust Institutional Optimum Growth Fund and the Excelsior Trust Institutional Equity Value Fund, which will be the only portfolios of the Excelsior Trust to which Affiliated Plan assets in the CIF will be transferred. Excelsior Funds is a Maryland corporation registered under the Act as an open-end management investment company. Excelsior Funds is currently divided into 20 portfolios. The following portfolios are the only portfolios of Excelsior Funds to which Affiliated Plan assets in the CIF will be transferred: Excelsior Funds Equity Fund, Excelsior Funds International Fund, Excelsior Funds Short-Term Government Securities Fund, Excelsior Funds Managed Income Fund, Excelsior Funds Early Life Cycle Fund, and Excelsior Funds Money Fund (together with the Excelsior Trust Institutional Optimum Growth Fund and the Excelsior Trust Institutional Equity Value Fund, the ''Portfolios''). U.S. Trust serves as investment adviser to the Portfolios.

3. U.S. Trust is terminating the CIF and proposes to transfer the Affiliated Plans' assets of the CIF in-kind to the Portfolios. Under this proposal, each Portfolio will accept a transfer of securities from a corresponding CIF Portfolio with substantially similar investment objectives, in exchange for Portfolio shares. The conversion may occur in stages, with certain transfers occurring before others.

4. The assets of the CIF representing Other Plans may be converted into Funds in accordance with a series of no-action letters in which the SEC staff has permitted similar conversions of collective trust funds into mutual funds.[2] The Affiliated Plans are unable to rely on the no-action letters, however, because each Affiliated plan has a five percent or greater beneficial interest in CIF.[3] As a result, applicants are seeking exemptive relief for the transfer of CIF assets into the Funds on behalf of the Affiliated Plans.

5. Affiliated Plan assets of the CIF will be transferred as follows: the Short-Term Fixed Income CIF Portfolio into the Excelsior Funds Money Fund, the Fixed Income CIF Portfolio into the Excelsior Funds Managed Income Fund, the U.S. Government Short/Intermediate Term CIF Portfolio into the Excelsior Funds Short-Term Government Securities Fund, the International CIF Portfolio into the Excelsior Funds International Fund, the Equity CIF Portfolio into the Excelsior Funds Equity Fund, the Early Life Cycle CIF Portfolio into the Excelsior Funds Early Life Cycle Fund, the Optimum Growth CIF Portfolio into the Excelsior Trust Institutional Optimum Growth Fund, and the Equity Value CIF Portfolio into the Excelsior Trust Institutional Equity Value Fund.

6. Applicants will institute the following procedures to ensure the protection of Plan participants in the proposed transactions. Each Affiliated Plan will have an employee benefit review committee (the ''Committee'') that serves as fiduciary for the Plan. Also, each Affiliated Plan and Other Plan will have a fiduciary, independent of U.S. Trust and its affiliates, that will supervise the investment of that Plan's assets. This independent fiduciary generally will be the Plan's named fiduciary, trustee or sponsoring employee (in the case of the Other Plans), and will be subject, as will the Committee, to fiduciary responsibilities under the Employee Retirement Income Security Act of 1974 (''ERISA''). Under section 404(a) of ERISA, such fiduciaries must ensure that the investment of the Affiliated Plans' assets is prudent and operates exclusively for the benefit of participating employees of U.S. Trust and/or its affiliates and of their beneficiaries.

7. Before transferring the Affiliated Plans' CIF assets to the Portfolios, U.S. Trust will seek and obtain the approval of the Committee and each Affiliated Plan's independent fiduciary. U.S. Trust will provide the Committee and the independent fiduciaries with a current prospectus for the relevant Portfolios and a written statement giving full disclosure of the fees to be received by U.S. Trust and/or its affiliates and the

[2] *See, e.g.,* The DFA Investment Trust Company (pub. avail. Oct. 17, 1995); Federated Investors (pub. avail. Apr. 21, 1994); and Lincoln National Investment Management Company (pub. avail. Apr. 25, 1976).

[3] *See* The DFA Investment Trust Company (pub. avail. Mar. 21, 1996) (clarifying the staff's position that a less than five percent beneficial interest in a collective trust fund conversion by an affiliated person of a fund, or an affiliated person of such affiliated person, is not, in and of itself, a disqualifying affiliation for purposes of rule 17a–7).

terms of the proposed transactions. The disclosure will explain why U.S. Trust believes that the investment of assets of the Affiliated Plans in the Portfolios is appropriate.

8. On the basis of such information, the Committee and the independent fiduciary will decide whether to authorize U.S. Trust to invest the relevant Affiliated Plan's assets in the Fund and to receive fees from the Fund. U.S. Trust does not charge Plan level fees to Affiliated Plans and, therefore, will not collect fees at both the Plan level and the Fund level for managing the same assets. However, the fees charged to the Affiliated Plans may increase as a result of the greater costs of Fund administration as compared to the administration of the CIF. Because U.S. Trust does charge Plan level fees to the Other Plans, it will credit all Fund level fees back to those Plans.

9. Because of the need to obtain approval from various fiduciaries, and the need to obtain effectiveness of the registration statement describing the two new equity Portfolios of the Excelsior Trust, the proposed transactions may occur in more than one stage. Only those Plans that have received the required approval from the Committee and the independent fiduciary will participate at any stage. As of the date of each transfer, U.S. Trust, on behalf of the CIF Portfolios, will deliver to the corresponding Portfolio securities equal in value to the interest of each participating Plan, in exchange for Fund shares with total net asset value equal to the market value of the transferred assets as of the date of the transfer. All securities transferred to a Portfolio in any stage will be securities capable of being priced pursuant to rule 17a–7(b) (1) through (4) under the Act, and will be consistent with the investment objectives and fundamental policies of the corresponding Portfolio. The Fund shares received by the CIF Portfolios then will be distributed, *pro rata*, to all Plans whose interests were converted as of that date.

10. U.S. Trust is terminating the CIF and transferring its assets into the Funds because it believes investment of those assets in mutual fund will better serve the interests of its employee retirement benefit plan clients. Investment of Plan assets in mutual funds will allow the sponsors of and participants in the Plans to monitor more easily the performance of their investments on a daily basis, as information concerning the investment performance of the Portfolios generally will be available in daily newspapers. Additionally, the mutual fund vehicle will provide other advantages, such as daily pricing, and will afford U.S. Trust a better opportunity to market its investment management services. Assuming those marketing efforts result in greater assets under management, this investment also will allow for greater diversification. Also, Plan participants will have the benefit of the heightened disclosure applicable to mutual funds under the federal securities laws.

Applicants' Legal Analysis

1. Section 17(a) of the Act, in relevant part, prohibits an affiliated person of a registered investment company, or an affiliated person of such person, acting as principal, from selling to or purchasing from such investment company any security or other property. Section 2(a)(3) of the Act, in relevant part, defines ''affiliated person'' to include: (a) any person directly or indirectly owning, controlling, or holding with the power to vote, 5% or more of the outstanding voting securities of such other person; (b) any person directly or indirectly controlling, controlled by, or under common control with, such other person; and (c) if such other person is an investment company, any investment adviser thereof.

2. Section 6(c) provides that the SEC may exempt any person or transaction from any provision of the Act or any rule thereunder to the extent that such exemption is necessary or appropriate in the public interest and consistent with the protection of investors and the purposes fairly intended by the policy and provisions of the Act.

3. Section 17(b) provides that the SEC shall exempt a proposed transaction from section 17(a) if evidence establishes that: (a) the terms of the proposed transaction are reasonable and fair and do not involve overreaching; (b) the proposed transaction is consistent with the policies of the registered investment company involved; and (c) the proposed transaction is consistent with the general provisions of the Act.

4. Section 17(d) prohibits an affiliated person of a registered investment company, or an affiliated person of such person, acting as principal, from effecting any transaction in which such investment company is a joint, or joint and several, participant with such person in contravention of SEC rules and regulations. Rule 17d–1 under the Act provides that no joint transaction covered by the rule may be consummated unless the SEC issues an order upon application. In passing upon such applications, the SEC considers whether participation by a registered investment company is consistent with the provisions, policies, and purposes of the Act, and is not on a basis less advantageous than that of other participants.

5. Because the CIF may be viewed as acting as principal in the proposed transactions and because the CIF and the Funds may be viewed as being under the common control of U.S. Trust within the meaning of section 2(a)(3)(C) of the Act, the proposed transactions may be subject to the prohibitions contained in section 17(a). For the same reasons, the proposed transactions might be deemed to be a joint enterprise or other joint arrangement prohibited by section 17(d) and rule 17d–1.

6. Applicants request an order under sections 6(c) and 17(b) granting an exemption from section 17(a), and pursuant to section 17(d) and rule 17d–1. Applicants submit that the terms of the proposed transactions, as set forth above, satisfy the standards for an exemption set forth in sections 6(c) and 17(b) and rule 17d–1.

7. Applicants believe that the proposed transactions will be on terms that are reasonable and fair, and do not involve overreaching on the part of any person. The proposed transactions will comply with rule 17a–7 (b)–(f) under the Act, and also will comply with the policy behind the conditions set forth in rule 17a–8. Applicants assert that the fact that the proposed transactions are designed as in-kind transfers does not negatively affect their fairness. Indeed, if the proposed transactions were effected in cash, the Plans would have to sell their securities, thereby incurring brokerage commissions or the adverse effects of mark-downs. Similarly, following the Plans' investment in the Fund, the Fund would purchase similar securities in the market, causing a second round of brokerage commissions and the adverse effects of mark-ups. In addition, because time could elapse between the sale of Plan securities and the repurchase of similar securities, no assurance could be given that the Funds would be able to purchase those securities at the price for which Plan securities had been sold. In contrast, the proposed transactions would not expose the Plans' assets to transaction costs or timing risk.

8. Applicants contend that the requested exemptive relief also would be consistent with the purposes intended by the policies and provisions of the Act. Applicants believe that the proposed transactions do not give rise to the abuses that sections 17 (a) and (d) and rule 17d–1 were designed to prevent. A primary purpose underlying sections 17 (a) and (d) and rule 17d–1 is to prevent a person with a pecuniary interest in a transaction from using his or her position with a registered

investment company to benefit himself or herself to the detriment of the company's shareholders. After the proposed transactions, each Affiliated Plan will be a shareholder in a Portfolio with substantially similar investment objectives to the CIF Portfolio from which their assets were transferred. In this sense, the proposed transactions can be viewed as a change in the form in which assets are held, rather than as a disposition giving rise to section 17 concerns. Moreover, any transfer will be subject to extensive review and evaluation by independent fiduciaries whose actions are governed by ERISA and by the disinterested members of the board of directors (trustees) of the Funds. For these reasons, the participation will not be on a basis different from or less advantageous than that of other participants for purposes of rule 17d–1.

9. Applicants submit that the proposed transactions meet the section 6(c) standards for relief as necessary or appropriate in the public interest and consistent with the protection of investors and the purposes fairly intended by the policies and provisions of the Act. Shares of the Funds issued as part of the proposed transactions will be issued at prices equal to their net asset values. In addition, the assets of the Affiliated Plans will be valued pursuant to objective standards and are the type that the Portfolios otherwise would purchase through market transactions. Furthermore, the proposed transactions are subject to independent fiduciary approval. Therefore, the transfers will afford no opportunity for affiliated persons of the Funds to effect a transaction detrimental to the Affiliated Plans or to the other shareholders of the Funds.

Applicants' Conditions

Applicants agree that the order granting the requested relief shall be subject to the following conditions:

1. The purchase transactions will comply with the provisions of rules 17a–7(b)–(f).

2. The purchase transactions will not occur unless and until: (a) the boards of directors (trustees) of the Funds (including a majority of their disinterested members) and the Committee and the Affiliated Plans' independent fiduciaries find that the proposed transactions are in the best interest of the Funds and the Affiliated Plans, respectively; and (b) the boards of directors (trustees) of the Funds (including a majority of their disinterested members) find that the interests of the existing shareholders of the Funds will not be diluted as a result of the proposed transactions. These determinations and the basis on which they are made will be recorded fully in the records of the Funds and the Plans, respectively.

3. In order to comply with the policies underlying rule 17a–8, any conversion will have to be approved by the board of directors (trustees) of the Funds and any Affiliated Plan's independent fiduciaries who would be required to find that the interests of beneficial owners would not be diluted.

For the Commission, by the Division of Investment Management, pursuant to delegated authority.

Jonathan G. Katz,

Secretary.

[FR Doc. 96–7543 Filed 3–27–96; 8:45 am]

BILLING CODE 8010–01–M

[Release No. 34–37009; File No. S7–8–96]

Study and Report on Protections for Senior Citizens and Qualified Retirement Plans

AGENCY: Securities and Exchange Commission.

ACTION: Request for comments.

SUMMARY: The Private Securities Litigation Reform Act of 1995 directs the Securities and Exchange Commission (the ''Commission'') to determine whether investors that are senior citizens or qualified retirement plans require greater protection against securities fraud than is currently provided under the federal securities laws; and whether investors that are senior citizens or qualified retirement plans have been adversely impacted by abusive or unnecessary securities fraud litigation, and whether the current provisions of the federal securities laws are sufficient to protect them from such litigation. The Commission is soliciting comment on these questions and on the more general question of the role of senior citizens and qualified retirement plans in our securities markets.

DATES: Comments must be received no later than April 30, 1996.

ADDRESSES: Persons wishing to respond should file three copies of their written comments with Jonathan G. Katz, Secretary, Securities and Exchange Commission, 450 Fifth Street, N.W., Washington, D.C. 20549. Comments may also be submitted electronically at the following E-mail address: rule-commentssec.gov. All written comments should refer to File No. S7–8–96; this file number should be included on the subject line if E-mail is used. The comments will be available for public inspection and copying in the Commission's Public Reference Room, 450 Fifth Street, N.W., Washington, D.C. 20549. Electronically submitted comments will be posted on the Commission's Internet web site (http://www.sec.gov).

FOR FURTHER INFORMATION CONTACT: John W. Avery, Office of the General Counsel, at (202) 942–0816; or Ann M. Gerg, Office of the General Counsel, at (202) 942–0857.

SUPPLEMENTARY INFORMATION:

I. Introduction

On December 22, 1995, Congress overrode the President's veto and enacted the Private Securities Litigation Reform Act of 1995 (the ''Act''). Section 106 of the Act requires the Commission to:

(1) Determine whether investors that are senior citizens or qualified retirement plans require greater protection against securities fraud than is provided in the Act and the amendments made by the Act; and

(2) Determine whether investors that are senior citizens or qualified retirement plans have been adversely impacted by abusive or unnecessary securities fraud litigation, and whether the provisions in the Act or amendments made by the Act are sufficient to protect their investments from such litigation.

If the Commission determines that greater protections are necessary, it must submit a report to the Congress by June 19, 1996.

For purposes of section 106 of the Act, the term ''senior citizen'' means an individual who is 62 years of age or older, and the term ''qualified retirement plan'' has the same meaning as in section 4974(c) of the Internal Revenue Code of 1986.

II. Background

Senior citizens and qualified retirement plans are substantial participants in our financial markets and play a vital role in capital formation. As the population ages, the importance of seniors and qualified retirement plans to our markets will increase. Many employers are moving away from traditional pension plans in which the plan participants have little, if any, investment discretion, to defined contribution plans in which the participants have significant investment discretion. Thus, seniors and qualified retirements plans may be more vulnerable to securities fraud and to the effects of abusive securities fraud litigation.

The Commission believes that it would be valuable to examine generally

the role of senior citizens and qualified retirement plans as investors and their importance to our markets and to capital formation, and to consider whether the federal securities laws provide adequate protections to senior citizens and qualified retirement plans against securities fraud and abusive securities litigation. The Commission also believes that it would be appropriate to consider the special needs of senior citizens and qualified retirement plans and whether changes to the federal securities laws or to the commission's rules or regulations are necessary or desirable to address those needs.

III. Solicitation of Public Comment

The Commission seeks comment on the issues and questions described above and, more particularly, on the following questions with respect to investors that are senior citizens or qualified retirement plans:

1. What is the rule and importance of senior citizens and qualified retirement plans as investors in our financial markets, and how is that role and importance changing?

2. What are their special needs as investors, and what changes to the federal securities laws or to the Commission's rules or regulations may be necessary or desirable to address those needs?

3. Do they require greater protection against securities fraud than is provided in the Act and the amendments made by the Act, or than is provided under the federal securities laws?

4. Have they been adversely impacted by abusive or unnecessary securities fraud litigation? Are the provisions in the Act or amendments made by the Act sufficient to protect their investments from such litigation, or, more generally, are the provisions of the federal securities laws sufficient to protect their investments from such litigation?

5. What changes to the federal securities laws or to the Commission's rules or regulations may be necessary or desirable to thoroughly protect senior citizens and qualified retirement plans against securities fraud and abusive or unnecessary securities fraud litigation?

Commenters are requested to direct their comments to the special needs and circumstances of senior citizens and qualified retirement plans. Comments should not simply voice support for, or criticism of, the Act generally.

By the Commission.

Dated: March 21, 1996.

Jonathan G. Katz,

Secretary.

[FR Doc. 96–7538 Filed 3–27–96; 8:45 am]

BILLING CODE 8010–01–M

[Release No. 34–36996; File No. SR–CBOE–96–10]

Self-Regulatory Organizations; Notice of Filing of Proposed Rule Change by the Chicago Board Options Exchange, Inc., Relating to Multiple Representation

March 20, 1996.

Pursuant to Section 19(b)(1) of the Securities Exchange Act of 1934 (''Act''), 15 U.S.C. 78s(b)(1), notice is hereby given that on March 6, 1996, the Chicago Board Options Exchange, Inc. (''CBOE'' or ''Exchange'') filed with the Securities and Exchange Commission (''SEC'' or ''Commission'') the proposed rule change as described in Items I, II, and III below, which Items have been prepared by the self-regulatory organization. The Commission is publishing this notice to solicit comments on the proposed rule change from interested persons.

I. Self-Regulatory Organization's Statement of the Terms of Substance of the Proposed Rule Change

Currently, CBOE Rule 6.55, ''Multiple Orders Prohibited,'' provides that no CBOE member, for any account in which he has an interest or on behalf of a customer, shall maintain with more than one broker orders for the purchase or sale of the same option contract or other security, or the same combination of option contracts or other securities, with knowledge that such orders are for the account of the same principal. The CBOE proposes to amend CBOE Rule 6.55 by adding paragraph (b), which will provide that, except in accordance with procedures established by the appropriate Floor Procedure Committee, or with such Floor Procedure Committee's permission in individual cases, no market maker shall enter or be present in a trading crowd while a floor broker present in the trading crowd is holding an order on behalf of the market maker's individual account or an order initiated by the market maker for an account in which the market maker has an interest. The proposal will also add Interpretation and Policy .01, which will provide three procedures under which a market maker may enter a trading crowd in which a floor broker is present who holds an order on behalf of the market marker's individual account or an order initiated by the market maker for an account in which the market maker has an interest, and Interpretation and Policy .02, which will advise CBOE members to consult Exchange regulatory circulars concerning joint accounts for procedures government the simultaneous presence in a trading crowd of participants in and orders for the same joint account.

The text of the proposal is available at the Office of the Secretary, CBOE, and at the Commission.

II. Self-Regulatory Organization's Statement of the Purpose of, and Statutory Basis for, the Proposed Rule Change

In its filing with the Commission, the self-regulatory organization included statements concerning the purpose of and basis for the proposed rule change and discussed any comments it received on the proposed rule change. The text of these statements may be examined at the places specified in Item IV below. The self-regulatory organization has prepared summaries, set forth in sections (A), (B), and (C) below, of the most significant aspects of such statements.

(A) Self-Regulatory Organization's Statement of the Purpose of, and Statutory Basis for, the Proposed Rule Change

According to the CBOE, the purpose of CBOE Rule 6.55 is to prevent a person from being disproportionately represented in a trading crowd. In furtherance of this purpose, CBOE Rule 6.55 currently provides that no Exchange member, for a customer or for any account in which the member has an interest, shall maintain with more than one broker orders for the purchase or sale of the same option contract or other security, or the same combination of option contracts or other securities, with the knowledge that such orders are for the account of the same principal.

The CBOE states that, in addition to this prohibition and in furtherance of the same purpose, the Exchange also has had a long-standing policy of prohibiting market makers, except in accordance with procedures established by the appropriate Floor Procedure Committee or with such Floor Procedure Committee's permission in individual cases, from entering or being present in a trading crowd while a floor broker present in the trading crowd is holding an order on behalf of the market maker's individual account or an order initiated by the market maker for an account in which the market maker has an interest.[1] This policy, which is

[1] Exceptions to this policy which have been approved by a Floor Procedure Committee are contained in Exchange Regulatory Circular RG95–64 which concerns the trading activities of joint account participants in the Standard & Poor's (''S&P'') 100 (''OEX'') and S&P 500 (''SPX'') index option classes. *See also* Securities Exchange Act

Continued

reflected in Exchange Floor Report Number 21, dated May 15, 1975, and in educational materials which are provided to Exchange members, prevents a market maker from avoiding CBOE Rule 6.55 by placing an order with a floor broker for a particular option contract or other security and also representing himself or herself in the trading crowd for such option contract or other security. The purpose of the proposed rule change is to specifically delineate this policy in the Exchange's rules by including it in a new paragraph (b) to CBOE Rule 6.55.[2]

In addition, the CBOE proposes to add Interpretation and Policy .01 to CBOE Rule 6.55 to specify three alternative procedures that govern how a market maker may permissibly enter a trading crowd in which a floor broker is present who holds an order on behalf of the market maker's individual account or an order initiated by the market maker for an account in which the market maker has an interest.

Under the first alternative, the market maker must make the floor broker aware of the market maker's intention to enter the trading crowd and the floor broker must time-stamp the order ticket for the market maker order and write the notation ''Cancel'' or ''CXL'' next to the time stamp. If the market maker wishes to re-enter the order upon the market maker's exit from the trading crowd, the floor broker must at that time again time stamp the order ticket and write the notation ''Reentry'' or ''RNTRY'' next to such subsequent time stamp.

Under the second alternative, the market maker must cancel the market maker order by giving the floor broker a written cancellation of the order which is time-stamped by the market maker immediately prior to its transmission to the floor broker. If the market maker wishes to re-enter the order upon the market maker's exit from the trading crowd, a new order ticket must be used.

Under the third alternative, the market maker must cancel the market maker order by taking the order ticket for the order back from the floor broker, provided that the market maker allows the floor broker to retain a copy of the order ticket (which copy the floor broker must time-stamp at the time of cancellation and retain for the floor broker's records). If the market maker wishes to re-enter the order upon the market maker's exit from the trading crowd, a new order ticket must be used.

The CBOE states that the proposed amendment to CBOE Rule 6.55 also codifies past practice by providing that the appropriate Floor Procedure Committee may adopt other procedures which, if followed, would permit a market maker to be exempt from the requirements of paragraph (b) of CBOE Rule 6.55, or may grant permission for a market maker to enter a trading crowd in a particular instance notwithstanding the requirements of that paragraph.

Finally, the proposed amendment makes certain editorial changes to CBOE Rule 6.55 that do not affect its substance, such as changing the title of CBOE Rule 6.55 from ''Multiple Orders Prohibited'' to ''Multiple Representation Prohibited'' in order to more accurately reflect the scope of the amended rule.

The CBOE believes that the proposed rule change is consistent with Section 6(b) of the Act, in general, and furthers the objectives of Section 6(b)(5), in particular, in that it prohibits the multiple representation of an order in a trading crowd, thereby promoting just and equitable principles of trade, removing impediments to and perfecting the mechanism of a free and open market and a national market system, and, in general, protecting investors and the public interest.

(B) Self-Regulatory Organization's Statement on Burden on Competition

The CBOE does not believe that the proposed rule change will impose any burden on competition.

(C) Self-Regulatory Organization's Statement on Comments on the Proposed Rule Change Received From Members, Participants or Others

No written comments were solicited or received with respect to the proposed rule change.

III. Date of Effectiveness of the Proposed Rule Change and Timing for Commission Action

Within 35 days after the publication of this notice in the Federal Register or within such longer period (i) as the Commission may designate up to 90 days of such date if it finds such longer period to be appropriate and publishes its reason for so finding or (ii) as to which the self-regulatory organization consents, the Commission will:

(a) by order approve such proposed rule change, or

(b) institute proceedings to determine whether the proposed rule change should be disapproved.

IV. Solicitation of Comments

Interested persons are invited to submit written data, views and arguments concerning the foregoing. Persons making written submissions should file six copies thereof with the Secretary, Securities and Exchange Commission, 450 Fifth Street, N.W., Washington, D.C. 20549. Copies of the submission, all subsequent amendments, all written statements with respect to the proposed rule change that are filed with the Commission, and all written communications relating to the proposed rule change between the Commission and any person, other than those that may be withheld from the public in accordance with the provisions of 5 U.S.C. 552, will be available for inspection and copying at the Commission's Public Reference Section, 450 Fifth Street, N.W., Washington, D.C. Copies of such filing will also be available for inspection and copying at the principal office of the above-mentioned self-regulatory organization. All submissions should refer to the file number in the caption above and should be submitted by April 18, 1996.

For the Commission, by the Division of Market Regulation, pursuant to delegated authority.[3]

Jonathan G. Katz,

Secretary.

[FR Doc. 96–7507 Filed 3–27–96; 8:45 am]

BILLING CODE 8010–01–M

[Release No. 34–37000; International Release No. 955; File No. SR–ISCC–96–02]

Self-Regulatory Organizations; International Securities Clearing Corporation; Notice of Filing of a Proposed Rule Change To Permit ISCC To Charge and To Collect From Members Charges Imposed by Certain Third Parties

March 21, 1996.

Pursuant to Section 19(b)(1) of the Securities Exchange Act of 1934 (''Act''),[1] notice is hereby given that on March 19, 1996, the International Securities Clearing Corporation (''ISCC'') filed with the Securities and Exchange Commission (''Commission'') the proposed rule change (File No. SR–

Release No. 36977 (March 15, 1996) (order approving File No. SR-CBOE–95–65) (approving regulatory circular which provides that a joint account trading in equity options may be represented simultaneously in a trading crowd by participants trading in person).

[2] The proposal also adds Interpretation and Policy .02 to CBOE Rule 6.55, which states that members should consult Exchange regulatory circulars concerning joint accounts in connection with procedures governing the simultaneous presence in a trading crowd of participants in and orders for the same joint account, since such circulars have in the past granted certain exemptions to the policy proposed to be delineated in CBOE Rule 6.55 with respect to the trading of joint accounts.

[3] 17 CFR 200.30–3(a)(12) (1995).

[1] 15 U.S.C. 78s(b)(1) (1988).

ISCC–96–02) as described in Items I, II, and III below, which items have been prepared primarily by ISCC. The Commission is publishing this notice to solicit comments on the proposed rule change from interested persons.

I. Self-Regulatory Organization's Statement of the Terms of Substance of the Proposed Rule Change

The purpose of the proposed rule change is to expand ISCC's authority to charge and to collect from members fees imposed by third parties.

II. Self-Regulatory Organization's Statement of the Purpose of, and Statutory Basis for, the Proposed Rule Change

In its filing with the Commission, ISCC included statements concerning the purpose of and basis for the proposed rule change and discussed any comments it received on the proposed rule change. The text of these statements may be examined at the places specified in Item IV below. ISCC has prepared summaries, set forth in sections (A), (B), and (C) below, of the most significant aspects of such statements.[2]

(A) Self-Regulatory Organization's Statement of the Purpose of, and Statutory Basis for, the Proposed Rule Change

ISCC proposes to expand its authority to charge and to collect from its members fees imposed by certain third parties. ISCC's current rules permit ISCC to charge members for fees imposed by banks and trust companies in conjunction with the Global Clearance Network Service. The proposed modifications to ISCC's rules will permit ISCC to include on members' settlement statements charges imposed by entitles or organizations with which ISCC has entered into agreements and which provide services or equipment to ISCC members which are integral to the services provided by ISCC.

From time to time, third parties which have entered into agreements with ISCC and which provide ISCC members with certain services or equipment which facilitate access to an ISCC service request that ISCC directly bill its members for the services such third parties provide to members.[3] The proposed rule change will permit such third parties to aggregate individual member charges in one invoice to ISCC and will allow ISCC in turn to include the third parties' charges to individual members on such ISCC members' settlement statements. The proposed rule will thereby enable ISCC members to consolidate their payment obligations. If a member does not consent to such charges or otherwise disputes such charges, ISCC will not fine the member for not paying to ISCC the third party's charges. In addition, ISCC will have no liability to any third party vendors for such charges.

ISCC believes the proposed rule change is consistent with the requirements of Section 17A of the Act and the rules and regulations thereunder because the rule proposal provides for the equitable allocation of dues, fees, and other charges among ISCC's participants.

(B) Self-Regulatory Organization's Statement on Burden on Competition

ISCC does not believe that the proposed rule change will impact or impose a burden on competition.

(C) Self-Regulatory Organization's Statement on Comments on the Proposed Rule Change Received From Members, Participants, or Others

No written comments relating to the proposed rule change have been solicited or received. ISCC will notify the Commission of any written comments received by ISCC.

III. Date of Effectiveness of the Proposed Rule Change and Timing for Commission Action

Within thirty-five days of the date of publication of this notice in the Federal Register or within such longer period (i) as the Commission may designate up to ninety days of such date if it finds such longer period to be appropriate and publishes its reasons for so finding or (ii) as to which ISCC consents, the Commission will:

(a) by order approve such proposed rule change or

(b) institute proceedings to determine whether the proposed rule change should be disapproved.

IV. Solicitation of Comments

Interested persons are invited to submit written data, views, and arguments concerning the foregoing. Persons making written submissions should file six copies thereof with the Secretary, Securities and Exchange Commission, 450 Fifth Street, N.W., Washington, D.C. 20549. Copies of the submission, all subsequent amendments, all written statements with respect to the proposed rule change that are filed with the Commission, and all written communications relating to the proposed rule change between the Commission and any person, other than those that may be withheld from the public in accordance with the provisions of 5 U.S.C. 552, will be available for inspection and copying in the Commission's Public Reference Room, 450 Fifth Street, N.W., Washington, D.C. 20549. Copies of such filing will also be available for inspection and copying at the principal office of ISCC. All submissions should refer to the file number SR–ISCC–96–02 and should be submitted by April 18, 1996.

For the Commission by the Division of Market Regulation, pursuant to delegated authority.[4]

Jonathan G. Katz,

Secretary.

[FR Doc. 96–7501 Filed 3–27–96; 8:45 am]

BILLING CODE 8010–01–M

[2] The Commission has modified the text of the statements prepared by ISCC.

[3] For example, ISCC members may want to obtain computer hardware and/or software to access certain ISCC services. To facilitate such access, ISCC would make arrangements with a third party vendor to supply members with the appropriate hardware and/or software. The third party vendor would send a detailed monthly invoice directly to ISCC reflecting the individual member charge and aggregate charges for the month. ISCC would then include the appropriate charge on each member's monthly statement. ISCC would remit to the vendor within the agreed upon time period the amount that ISCC actually collected from members in connection with the vendor's charges.

[4] 17 CFR 200.30–3(a)(12) (1994).

[Release No. 34–37010; File No. SR–NASD–96–09]

Self-Regulatory Organizations; Notice of Filing of Proposed Rule Change by National Association of Securities Dealers, Inc. Relating to the Distribution of Interim Reports to Beneficial Owners and the Use of New Technology To Communicate Such Information to Shareholders

March 21, 1996.

Pursuant to Section 19(b)(1) of the Securities Exchange Act of 1934 (''Act''), 15 U.S.C. 78s(b)(1), notice is hereby given that on March 13, 1996, the National Association of Securities Dealers, Inc. (''NASD'' or ''Association'') filed with the Securities and Exchange Commission (''SEC'' or ''Commission'') the proposed rule change as described in Items I, II, and III below, which Items have been prepared by the NASD. The Commission is publishing this notice to solicit comments on the proposed rule change from interested persons.

I. Self-Regulatory Organization's Statement of the Terms of Substance of the Proposed Rule Change

The NASD is filing a proposed rule change to Part II of Schedule D to the NASD By-Laws [1] recommending the distribution of interim reports to all beneficial shareholders if sent to any registered shareholders and encouraging the use of communications technology to make timely communications to shareholders. Below is the text of the proposed rule change. Proposed new language is italicized; proposed deletions are in brackets.

Schedule D [2]—Part II; Qualification Requirements for NASDAQ Stock Market Securities

Sec. 1 Qualification Requirements for Domestic and Canadian Securities

* * * * *

(d) Nasdaq issuers which distribute interim reports to shareholders shold distribute such reports to both registered and beneficial shareholders. Nasdaq issuers are also encouraged to consider additional technological methods to communicate such information to shareholders in a timely and less costly manner as such technology becomes available.

Sec. 2 Qualification Requirements for non-Canadian Foreign Securities and American Depository Receipts

* * * * *

(f) Nasdaq issuers which distribute interim reports to shareholders should distribute such reports to both registered and beneficial shareholders. Nasdaq issuers are also encouraged to consider additional technological methods to communicate such information to shareholders in a timely and less costly manner as such technology becomes available.

* * * * *

II. Self-Regulatory Organization's Statement of the Purpose of, and Statutory Basis for, the Proposed Rule Change

In its filing with the Commission, the NASD included statements concerning the purpose of and basis for the proposed rule change and discussed any comments it received on the proposed rule change. The text of these statements may be examined at the places specified in Item IV below. The NASD has prepared summaries, set forth in Sections (A), (B), and (C) below, of the most significant aspects of such statements.

(A) Self-Regulatory Organization's Statement of the Purpose of, and Statutory Basis for, the Proposed Rule Change

The NASD is proposing to add new Section 1(d) to Part II of Schedule D of the By-Laws (''Schedule D'') to recommend that Nasdaq issuers which distribute interim reports [3] to shareholders distribute such reports to both registered and beneficial shareholders.[4] The NASD also is proposing to add the same provision as new section 2(f) of Part II to Schedule D regarding the qualification requirements for issuers of non-Canadian foreign securities and ADRs that are included in The Nasdaq Stock Market.

The NASD proposal is the product of a review by various industry groups, including the American Society of Corporate Secretaries and the Securities Industry Association, of listed [5] companies' dissemination of interim earnings reports to shareholders. The industry groups have been attempting to achieve some uniformity among listed companies in the handling of interim earnings reports. Presently, some listed companies distribute interim reports to both record and beneficial shareholders, some listed companies only send interim reports to record shareholders, and some do not send interim reports to any shareholders. The portion of the proposed rule change recommending that Nasdaq issuers which distribute interim reports to shareholders distribute such reports to both registered and beneficial shareholders is consistent with voluntary provisions adopted by the New York Stock Exchange and the American Stock Exchange and, therefore, would provide the uniformity among these markets regarding the handling of listed company interim earnings reports that was sought by the above noted industry groups.

The NASD also proposes to add language to new Sections 1(d) and (2)(f) to Part II of Schedule D that would encourage Nasdaq issuers to consider additional technological methods to communicate such information to shareholders in a timely and less costly manner as such technology becomes available. This provision is intended to encourage further Nasdaq issuers to utilize the new technological communications available to many but not all beneficial shareholders. This provision of the proposal rule change, therefore, is intended to be considered by Nasdaq issuers as a supplement to the first provision of the proposed rule change recommending that Nasdaq issuers which distribute interim reports to shareholders should distribute such reports to both registered and beneficial shareholders.

The proposed rule change is a recommendation to Nasdaq issuers and is voluntary in nature. Non-compliance with the provisions of the proposed rule change, therefore, would not subject Nasdaq issuers to Nasdaq actions for non-compliance with Nasdaq listing requirements. The proposed rule change would apply to both the Nasdaq National Market and The Nasdaq SmallCap Market tiers of The Nasdaq Stock Market.

The NASD believes that the proposed rule change is consistent with the provisions of Section 15A(b)(6) of the Act in that the proposed rule change is designed to prevent fraudulent and manipulative acts and practices, to promote just and equitable principles of trade, to remove impediments to and perfect the mechanism of a free and open market and a national market system, and, in general to protect investors and the public interest by, among other things, encouraging Nasdaq issuers which distribute interim reports to shareholders to distribute such reports to both registered and beneficial shareholders. This provision of the proposed rule change is consistent with provisions adopted by the New York Stock Exchange and the American Stock Exchange and, therefore, would provide the uniformity among these markets regarding the handling of listed company interim earnings reports that was sought by the above-noted industry groups. The proposed rule change, in addition, would encourage Nasdaq issuers to consider additional technological methods to communicate the information contained in their

[1] *NASD Manual*, Schedules to the By-Laws, Schedule D, Part II (CCH) ¶¶ 1803–06A.

[2] Pursuant to a new rule numbering system for the NASD Manual anticipated to be effective no later than May 1, 1996, Sections 1 and 2 of Part II to Schedule D that are the subject of this proposed rule change will become Rules 4310 (regarding qualification requirements for Nasdaq domestic and Canadian securities and Rule 4320 (regarding qualification requirements for Nasdaq Non-Canadian foreign securities and American Depositary Receipts (''ADRs'')), respectively. *See* Securities Exchange Act Release No. 36698 (January 11, 1996), 61 FR 1419 (January 19, 1996) (order approving SR–NASD–95–51).

[3] Interim reports are reports that are voluntarily distributed by an issuer as part of its shareholder relations activities and do not include quarterly financial reports required to be filed with the Commission pursuant to Sections 13(a) and 15(d) of the Act, 15 U.S.C. §§ 78m(a), 78*o*(d).

[4] The substance of this portion of the proposed rule change has been adopted by the New York Stock Exchange and American Stock Exchange. *See* NYSE Company Manual Rule 203.02 and American Stock Exchange Company Guide Section 623.

[5] The securities of Nasdaq issuers are ''included in'' The Nasdaq Stock Market, they are not ''listed on'' the Nasdaq Stock Market. However, for purposes of this filing, the term ''listed'' will apply to Nasdaq, as well as an exchange-listed securities.

interim reports to shareholders in a timely and less costly manner, as such technology becomes available. The NASD believes that the proposed rule change will enhance shareholder communications in The Nasdaq Stock Market.

(B) Self-Regulatory Organization's Statement on Burden on Competition

The NASD does not believe that the proposed rule change will result in any burden on competition that is not necessary or appropriate in furtherance of the purposes of the Act, as amended.

(C) Self-Regulatory Organization's Statement on Comments on the Proposed Rule Change Received from Members, Participants, or Others

Written comments were neither solicited nor received.

III. Date of Effectiveness of the Proposed Rule Change and Timing for Commission Action

Within 35 days of the date of publication of this notice in the Federal Register or within such longer period (i) as the Commission may designate up to 90 days of such date if it finds such longer period to be appropriate and publishes its reason for so finding or (ii) as to which the self-regulatory organizations consents, the Commission will:

A. by order approve such proposed rule change, or

B. institute proceedings to determine whether the proposed rule change should be disapproved.

IV. Solicitation of Comments

Interested persons are invited to submit written data, views, and arguments concerning the foregoing. Persons making written submissions should file six copies thereof with the Secretary, Securities and Exchange Commission, 450 Fifth Street, NW., Washington DC 20549. Copies of the submission, all subsequent amendments, all written statements with respect to the proposed rule change that are filed with the Commission, and all written communications relating to the proposed rule change between the Commission and any person, other than those that may be withheld from the public in accordance with the provisions of 5 U.S.C. 552, will be available for inspection and copying in the Commission's Public Reference Room. Copies of such filing will also be available for inspection and copying at the principal office of the NASD. All submissions should refer to SR–NASD–96–09 and should be submitted by April 18, 1996.

For the Commission, by the Division of Market Regulation, pursuant to delegated authority, 17 CFR 200.30–3(a)(12).

Jonathan G. Katz,

Secretary.

[FR Doc. 96–7503 Filed 3–27–96; 8:45 am]

BILLING CODE 8010–01–M

[Release No. 34–37006; File No. SR–NASD–96–10]

Self-Regulatory Organizations; Notice of Filing and Immediate Effectiveness of Proposed Rule Change by National Association of Securities Dealers, Inc. Relating to the OTC Bulletin Board® Service

March 21, 1996.

Pursuant to Section 19(b)(1) of the Securities Exchange Act of 1934 (''Act''), 15 U.S.C. 78s(b)(1), notice is hereby given that on March 13, 1996, the National Association of Securities Dealers, Inc. (''NASD'' or ''Association'') filed with the Securities and Exchange Commission (''SEC'' or ''Commission'') the proposed rule change as described in Items I, II, and III below, which Items have been prepared by the NASD. The NASD has designated this proposal as one constituting a change to a due, fee, or other charge under § 19(b)(3)(A)(ii) of the Act, which renders the rule effective upon the Commission's receipt of this filing. The Commission is publishing this notice to solicit comments on the proposed rule change from interested persons.

I. Self-Regulatory Organization's Statement of the Terms of Substance of the Proposed Rule Change

The proposed rule change amends Part VIII of Schedule D to the NASD By-Laws.[1] The text of the proposed rule change is as follows. (Additions are italicized; deletions are bracketed.)

Part VIII—Schedule of NASD Charges for Services and Equipment

A. System Services

* * * * *

14. OTC Bulletin Board Service

The following charge shall apply to a broker-dealer that displays quotations or trading interest in the OTC Bulletin Board service:

Position charge—*$6.00* [$5.00]/security/month

II. Self-Regulatory Organization's Statement of the Purpose of, and Statutory Basis for, the Proposed Rule Change

In its filing with the Commission, the NASD included statements concerning the purpose of and basis for the proposed rule change and discussed any comments it received on the proposed rule change. The text of these statements may be examined at the places specified in Item IV below. The NASD has prepared summaries, set forth in Sections (A), (B), and (C) below, of the most significant aspects of such statements.

(A) Self-Regulatory Organization's Statement of the Purpose of, and Statutory Basis for, the Proposed Rule Change

The OTC Bulletin Board Service (''OTCBB'' or ''Service'') is an electronic quotation medium operated by the Nasdaq Stock market, Inc. that allows eligible members to enter, update, and retrieve quote information and unpriced indications of interest for non-Nasdaq securities. The purpose of this proposed rule change is to increase the OTCBB position charge from $5 to $6 per market maker position per month. The fee increase will be effective as of the beginning of 1996. This fee increase is intended to recover a portion of the costs of a number of enhancements to the Service since it was first launched in 1990, as well as to recognize an increase in costs associated with the operation and regulation of the OTCBB.

Specifically, several enhancements have been in place for over two years without any increase in fees to offset development, implementation, and maintenance costs. These include ACT trade reporting; real time display of high, low, close, previous close, and volume; OTCBB symbols programmable in the Nasdaq Workstation ticker; size requirements for priced issues; the admission of certain regional exchange-listed issues; nightly removal of stale foreign equity quotes; and expedited admission of delisted Nasdaq, NYSE and Amex issues, as well as qualifying issues from other quotation mediums.

In addition, the NASD has submitted a filing with the Commission to permit the quotation of Direct Participation Program securities (''DPPs'') in the OTCBB, and to require transaction reporting for these securities. This will allow for a more centralized and transparent system for the quotation of DPPs, and will provide more efficient price discovery. Costs associated with

[1] Pursuant to a new rule numbering system for the NASD Manual anticipated to be effective no later than May 1, 1996, the rule that is the subject of this proposed rule change will become Rule 7010(m). *See* Exchange Act Release No. 36698 (January 11, 1996) 61 FR 1419 (January 19, 1996) (order approving new rule numbering system).

this initiative that already have been incurred include the creation and maintenance of a DPP ticker symbol database and directory for several thousand identifiable DPP issues.

The NASD believes that the proposed rule change is consistent with the provisions of Section 15A(b)(5)[2] of the Act. Section 15A(b)(5) specifies that the rules of a national securities association shall provide for the equitable allocations of reasonable dues, fees, and other charges among members, issuers, and other persons using any facility or system that the association operates or controls. The fee increase is the first since inception of the Service almost six years ago, and remains competitive with rates of the primary competitor.

(B) Self-Regulatory Organization's Statement on Burden on Competition

The NASD does not believe that the proposed rule change will result in any burden on competition that is not necessary or appropriate in furtherance of the purposes of the Act, as amended.

(C) Self-Regulatory Organization's Statement on Comments on the Proposed Rule Change Received From Members, Participants, or Others

Written comments were neither solicited nor received.

III. Date of Effectiveness of the Proposed Rule Change and Timing for Commission Action

The foregoing rule change has become effective immediately pursuant to Section 19(b)(3)(A)(ii) of the Act and subparagraph (e) of Rule 19b–4 thereunder in that it constitutes a change to a due, fee, or other charge.

At any time within sixty (60) days of the filing of a proposed rule change pursuant to Section 19(b)(3)(A) of the Act, the Commission may summarily abrogate the rule change if it appears to the Commission that such action is necessary or appropriate in the public interest, for the protection of investors, or otherwise in furtherance of the purposes of the Act.

IV. Solicitation of Comments

Interested persons are invited to submit written data, views, and arguments concerning the foregoing. Persons making written submissions should file six copies thereof with the Secretary, Securities and Exchange Commission, 450 Fifth Street, N.W., Washington, D.C. 20549. Copies of the submission, all subsequent amendments, all written statements with respect to the proposed rule change that are filed with the Commission, and all written communications relating to the proposed rule change between the Commission and any person, other than those that may be withheld from the public in accordance with the provisions of 5 U.S.C. § 552, will be available for inspection and copying in the Commission's Public Reference Room. Copies of such filing will also be available for inspection and copying at the principal office of the NASD. All submissions should refer to the file number in the caption above and should be submitted by April 18, 1996.

For the Commission, by the Division of Market Regulation, pursuant to delegated authority, 17 CFR 200.30–3(a)(12).

Jonathan G. Katz,

Secretary.

[FR Doc. 96–7505 Filed 3–27–96; 8:45 am]

BILLING CODE 8010–01–M

[2] 15 U.S.C. § 78*o*–3.

[Release No. 34–37001; File No. SR–NSCC–96–07]

Self-Regulatory Organizations; National Securities Clearing Corporation; Notice of Filing of a Proposed Rule Change To Permit NSCC To Charge and To Collect From Members Charges Imposed by Certain Third Parties

March 21, 1996.

Pursuant to Section 19(b)(1) of the Securities Exchange Act of 1934 (''Act''),[1] notice is hereby given that on March 19, 1996, the National Securities Clearing Corporation (''NSCC'') filed with the Securities and Exchange Commission (''Commission'') the proposed rule change (File No. SR–NSCC–96–07) as described in Items I, II, and III below, which items have been prepared primarily by NSCC. The Commission is publishing this notice to solicit comments on the proposed rule change from interested persons.

I. Self-Regulatory Organization's Statement of the Terms of Substance of the Proposed Rule Change

The purpose of the proposed rule change is to expand NSCC's authority to charge and to collect from members fees imposed by third parties.

II. Self-Regulatory Organization's Statement of the Purpose of, and Statutory Basis for, the Proposed Rule Change

In its filing with the Commission, NSCC included statements concerning the purpose of and basis for the proposed rule change and discussed any comments it received on the proposed rule change. The text of these statements may be examined at the places specified in Item IV below. NSCC has prepared summaries, set forth in sections (A), (B), and (C) below, of the most significant aspects of such statements.[2]

(A) Self-Regulatory Organization's Statement of the Purpose of, and Statutory Basis for, the Proposed Rule Change

NSCC proposes to expand its authority to charge and to collect from its members fees imposed by certain third parties. NSCC's current rules permit NSCC to charge members for fees imposed by self-regulatory organizations or other security industry organizations or entities with which NSCC has entered into agreements. The proposed modifications to NSCC's rules will permit NSCC to include on members' settlement statements charges imposed by other entities or organizations with which NSCC has entered into agreements and which provide services or equipment to members which are integral to the services provided by NSCC.

From time to time, third parties which have entered into agreements with NSCC and which provide NSCC members with certain services or equipment that facilitate access to NSCC services, request that NSCC directly bill its members for the services or equipment such third parties provide to members.[3] The proposed rule change will permit such third parties to aggregate individual member charges in one invoice to NSCC and will allow NSCC in turn to include the third parties' charges to individual members on such NSCC members' settlement statements. The proposed rule will thereby enable NSCC members to consolidate their payment obligations. If a member does not consent to such charges or otherwise disputes such charges, NSCC will not fine the member for not paying to NSCC the third party's charges. In addition, NSCC will have no

[1] 15 U.S.C. § 78s(b)(1) (1988).

[2] The Commission has modified the text of the statements submitted by NSCC.

[3] For example, NSCC members may want to obtain computer hardware and/or software to access certain NSCC services. To facilitate such access, NSCC would make arrangements with a third party vendor to supply members with the appropriate hardware and/or software. The third party vendor would send a detailed monthly invoice directly to NSCC reflecting the individual member charge and aggregate charges for the month. NSCC would then include the appropriate charge on each member's monthly statement. NSCC would remit to the vendor within the agreed upon time period the amount that NSCC actually collected from members in connection with the vendor's charges.

liability to any third party vendors for such charges.

NSCC believes the proposed rule change is consistent with the requirements of Section 17A of the Act and the rules and regulations thereunder because the rule proposal provides for the equitable allocation of dues, fees, and other charges among NSCC's participants.

(B) Self-Regulatory Organization's Statement on Burden on Competition

NSCC does not believe that the proposed rule change will impact or impose a burden on competition.

(C) Self-Regulatory Organization's Statement on Comments on the Proposed Rule Change Received from Members, Participants, or Others

No written comments relating to the proposed rule change have been solicited or received. NSCC will notify the Commission of any written comments received by NSCC.

III. Date of Effectiveness of the Proposed Rule Change and Timing for Commission Action

Within thirty-five days of the date of publication of this notice in the Federal Register or within such longer period (i) as the Commission may designate up to ninety days of such date if it finds such longer period to be appropriate and publishes its reasons for so finding or (ii) as to which NSCC consents, the Commission will:

(a) by order approve such proposed rule change or

(b) institute proceedings to determine whether the proposed rule change should be disapproved.

IV. Solicitation of Comments

Interested persons are invited to submit written data, views, and arguments concerning the foregoing. Persons making written submissions should file six copies thereof with the Secretary, Securities and Exchange Commission, 450 Fifth Street, N.W., Washington, D.C. 20549. Copies of the submission, all subsequent amendments, all written statements with respect to the proposed rule change that are filed with the Commission, and all written communications relating to the proposed rule change between the Commission and any person, other than those that may be withheld from the public in accordance with the provisions of 5 U.S.C. § 552, will be available for inspection and copying in the Commission's Public Reference Room, 450 Fifth Street, N.W., Washington, D.C. 20549. Copies of such filing will also be available for inspection and copying at the principal office of NSCC. All submissions should refer to the file number SR–NSCC–96–07 and should be submitted by April 18, 1996.

For the Commission by the Division of Market Regulation, pursuant to delegated authority.[4]

Jonathan G. Katz,

Secretary.

[FR Doc. 96–7500 Filed 3–27–96; 8:45 am]

BILLING CODE 8010–01–M

[Release No. 34–37003; File No. SR–PHLX–95–68]

Self-Regulatory Organizations; Order Approving Proposed Rule Change by the Philadelphia Stock Exchange, Inc., Relating To Exercise Price Intervals for Index Options

March 21, 1996.

I. Introduction

On January 2, 1996, the Philadelphia Stock Exchange, Inc. (''PHLX'' or ''Exchange'') submitted to the Securities and Exchange Commission (''SEC'' or ''Commission''), pursuant to Section 19(b)(1) of the Securities Exchange Act of 1934 (''Act''),[1] and Rule 19b–4 thereunder,[2] a proposed rule change to amend PHLX Rule 1101A, ''Terms of Option Contracts,'' to provide that the exercise (strike) price interval for near-term index options generally will be $5, except: (1) where the exercise price exceeds $500, the exercise price interval may be $10; and (2) where the exercise price exceeds $1,000, the exercise price interval may be $20. For out-of-the-money, far-term (fifth month),[3] or long-term index option series (long-term options or ''LEAPS''),[4] the proposal provides that the exercise price interval generally will be $25, except: (1) where the exercise price exceeds $500, the exercise price interval may be $50; and (2) where the exercise price exceeds $1,000, the exercise price interval may be $100. In addition, where the exercise price interval is greater than $5, the PHLX may list exercise prices at $5 intervals in response to demonstrated customer interest or a specialist request. The proposal also allows the PHLX to list exercise prices at wider intervals.

Notice of the proposal appeared in the Federal Register on February 7, 1996.[5] No comments were received on the proposed rule change.

II. Description of the Proposal

The PHLX proposes to amend PHLX Rule 1101A to incorporate new exercise price intervals for index options. Currently, PHLX Rule 1101A(a) states that the Exchange shall determine fixed point intervals of exercise prices for index options. According to the PHLX, the interval for index options generally is $5,[6] except in the far-term series of broad-based index options.[7] The PHLX proposes to widen the exercise price interval for all index options in accordance with a formula which takes into consideration the index value and time until expiration. Specifically, the PHLX proposes to list the following exercise price intervals for index options:

Index value	Near-term strikes	5th month/ LEAPS
500 or less	$5	$25
500 to 999	10	50
1,000 or more ...	20	100

Where the exercise price interval is wider than $5, the Exchange proposes to list (fill-in) exercise prices at $5 intervals in response to demonstrated customer interest or a specialist request.

The purpose of the proposal is to list index options with exercise prices at wider intervals, which should reduce the number of index option exercise prices listed on the Exchange.

---

[4] 17 CFR 200.30–3(a)(12) (1995).

[1] 15 U.S.C. § 78s(b)(1) (1988).

[2] 17 CFR 240.19b–4 (1955).

[3] Under PHLX Rule 1101A(b), the Exchange may list index option series of up to four cycle months and up to three consecutive months. According to the PHLX, most index options currently have five months trading at a given time, consisting of three cycle/quarterly series and two consecutive month series. For example, as of September 1995, the National Over-the-Counter Index (''XOC'') had the following months listed: October, November, December, March, and June.

[4] Under PHLX Rule 1101A(b)(iii), the Exchange may list long-term options with up to 60 months until expiration. *See* Securities Exchange Act Release No. 35616 (April 17, 1995), 60 FR 20135 (April 24, 1995) (order approving File No. SR–PHLX–95–11).

[5] *See* Securities Exchange Act Release No. 36796 (January 31, 1996), 61 FR 46599.

[6] *See e.g.*, Securities Exchange Act Release No. 35591 (April 11, 1995), 60 FR 19423 (April 18, 1995) (order approving File No. SR–PHLX–95–07) (listing of USTOP 100 Index (''TPX'') options). The PHLX notes that, generally, the strike price interval of an index option is listed in the contract specifications for the option.

[7] *See* PHLX Rule 1101A, Commentary .02. Commenatary .02 provides that exercise prices for index options shall be $5.00, except exercise prices in the far-term series of XOC options, Value Line Composite Index (''VLE'') options, Big Cap Index options and TPX options shall be $25.00 unless there is demonstrated customer interest at $5.00 intervals. Commentary .02 states that, for purposes of the commentary, demonstrated customer interest includes institutional (firm), corporate or customer interest expressed directly to the Exchange or through the customer's floor brokerage unit, but not interest expressed by a Registered Options Trader (''ROT'') with respect to trading for the ROT's own account.

Specifically, the Exchange proposes to list higher-priced index options (above 500), as well as out-of-the money series, far-term (fifth month) series and long-term options, at wider intervals in order to reduce the number of exercise prices. Although most Exchange index options currently are listed at 5-point intervals the PHLX has observed that $5 exercise price intervals are unnecessary for higher-priced index options, far-term series, and long-term options. According to the PHLX, narrower exercise price intervals generally are most useful where there is little volatility and in lower-priced series. In addition, the PHLX notes that limited trading volume occurs in the far-term series of index options. Thus, the proposed reduction in exercise prices will be concentrated in the series with the least trading interest.

For high-priced, out-of-the money and far-term series, where the PHLX proposes to list exercise prices, generally, at intervals of $25 (or at intervals of $50 where the exercise price exceeds $500 or intervals of $100 where the exercise price exceeds $1,000), the PHLX proposes to list series at intervals as narrow as $5 in response to demonstrated customer interest or specialist request. This proposal is similar to existing PHLX Rule 1101A, Commentary .02, which permits the far-term series of broad-based index options to be listed at $25 intervals, unless there is customer interest for a $5 interval. For purposes of the proposal, demonstrated customer interest includes institutional (firm), corporate or customer interest expressed directly to the Exchange or through the customer's floor brokerage unit, but not interest expressed by an ROT with respect to trading for the ROT's own account. This limitation and definition of customer interest is intended to ensure that only legitimate customer requests lead to the listing of exercise prices at narrower intervals.

The Exchange believes that the ability to add $5 intervals in response to customer interest is important because it will allow the Exchange to respond to the needs of the marketplace and because it will prevent the loss of specific trading opportunities. In addition, the $25 interval preserves key trading strategies because it often represents a 2½ point index movement, which is similar to a stock trading at $25 with the option traded at 2½ point exercise price intervals.

The PHLX states that the proposal will provide $25 intervals in the fifth month and long-term options for most Exchange index options. In addition, the proposal provides for wider exercise price intervals in extraordinary circumstances to permit the PHLX to read to market conditions.

In implementing the wider intervals, the PHLX will begin listing exercise prices at the wider interval following the expiration after Commission approval, listing only the exercise prices required by the proposal. At the subsequent quarterly expiration, when the PHLX lists new five-month and long-term options, the PHLX will list new series at the wider intervals. For example, if the proposal were approved and implemented in January, the PHLX would delist the far-term series (*i.e.*, September) if there was no open interest in the series. Complete implementation of the proposal would begin at the next quarterly expiration in March, when the PHLX lists the December series. Upon implementation of the proposal, the Exchange will list far-term series at wider intervals until there are less than six months remaining until expiration, when intervening exercise prices will be listed at narrower intervals.[8]

The Exchange believes that listing higher-priced index options, far-term series and long-term options at wider intervals should improve the efficiency of quotation dissemination and speedy pricing by reducing the number of listed exercise prices. At the same time, the effect on Exchange systems is likewise notable, with a reduction in system usage and operational burdens. In this regard, the PHLX notes that exercise prices occupy trading floor screen space and line traffic to outside vendors for dissemination. Further, the role of the specialist in monitoring multitudes of exercise prices should be simplified.

With respect to operational burdens, the Exchange expects that reducing the number of exercise prices should also reduce the instances of wrap-around symbols.[9] The use of wrap-around symbols, although common, increases operational burdens, complicates screen displays and potentially confuses investors viewing vendor screens.

The Exchange believes that the proposal is an important contribution to the effort to limit the number of operation exercise prices. In recently approving 2½ point exercise prices on a pilot basis for equity options, the Commission cited the need to balance an exchange's desire to accommodate market participation by offering a wide array of investment opportunities and the need to avoid proliferation of option series.[10] The PHLX believes that the current proposal achieves such a balance by reducing the number of exercise prices and, thus, the associated systems and operational burdens, yet retains trading strategies and investment opportunities by listing wider intervals and providing the flexibility to widen or narrow such intervals in response to investor requests or market conditions.

For these reasons, the Exchange believes that the proposal is consistent with Section 6 of the Act, in general, and, in particular, with Section 6(b)(5), in that it is designed to promote just and equitable principles of trade, remove impediments to and perfect the mechanism of a free and open market, and protect investors and the public interest by eliminating excessive strike prices, thereby improving quotation dissemination capabilities, while maintaining investors' flexibility to better tailor index option trading to meet their investment objectives.

III. Discussion

The Commission finds that the proposed rule change is consistent with the requirements of the Act and the rules and regulations thereunder applicable to a national securities exchange, and, in particular, the requirements of Section 6(b)(5) in that the proposal is designed to protect investors and the public interest and to remove impediments to and perfect the mechanism of a free and open market.[11] Specifically, the proposal will codify the Exchange's rules regarding the exercise price interval for all index options and will allow the PHLX to reduce the number of outstanding series listed for higher-priced index options, far-term index options, out-of-the money index options, and long-term index options by providing a wider exercise price interval for those series.

Because exercise prices for index options must be displayed on the Exchange's trading floor, disseminated to outside vendors and monitored by specialists, the Commission believes that the proposal should reduce the operational burden associated with the

[8] For example, because each quarter a far-term series with nine months until expiration is listed, after December expiration, a September option is listed. After March expiration, the September option is no longer the far-term series, as a December option is added, so that the intervening strike prices would be added to the December series.

[9] A wrap-around occurs when the strike price codes A–T indicating the strike price of an option (from 5 to 100) have been used and additional strike prices require listing the option with a different root symbol. For example, KBW October 310 calls use that symbol ''B'' to denote 310, but the 410 calls would also have used the symbol. Thus, the October 410 calls are traded under the symbol BKV JB.

[10] *See* Security Exchange Act Release No. 35993 (July 19, 1995), 60 FR 38073 (July 25, 1995) (order approving File Nos. SR–PHLX–95–08, SR–Amex–95–12, SR–PSE–95–07, SR–CBOE–95–19, and SR–PSE–95–12).

[11] 15 U.S.C. § 78f(b)(5) (1988).

listing of exercise prices in inactive series of certain index options. By reducing the number of listed exercise prices, the proposal may improve the efficiency of quotation dissemination and speedy pricing of index options, thereby helping the PHLX to maintain fair and orderly options markets. The Commission also believes that the proposal should help to eliminate the potential investor confusion associated with wrap-around symbols.[12] The Commission believes that the proposal strikes a reasonable balance between the PHLX's interest in limiting the number of outstanding exercise prices in inactive series and its interest in accommodating the needs of investors. According to the PHLX, market participants generally do not require $5 exercise price intervals for higher-priced index options, far-term series, and long-term options. In addition, the PHLX notes that there is limited trading volume in far-term series of index options. Thus, the proposed reduction in exercise prices will be concentrated in the series with the least trading interest.

At the same time, the proposal provides the PHLX with the flexibility to accommodate the needs of investors by allowing the Exchange to list exercise prices at $5 intervals in response to demonstrated customer interest or specialist request.[13] This flexibility will allow the Exchange to respond to the needs of the marketplace and, in turn, will allow investors to establish options positions that are tailored to meet their investment objectives. The Commission believes that the customer request provision should help to ensure the availability of options series that will provide investors with a means to adequately hedge their portfolios and implement their trading strategies. In addition, the PHLX has stated that the listing of $25 intervals for far-term series will preserve key trading strategies. The provision of the proposal allowing the PHLX to list exercise prices at wider intervals will provide the Exchange with additional flexibility in the listing of exercise prices.

Finally, the Commission believes that the PHLX will implement the proposal in an orderly manner. Specifically, the PHLX will begin listing exercise prices at the wider interval following the expiration after Commission approval of the proposed rule change. The PHLX will also delist the far-term series if there is no open interest in the series. In addition, after implementing the proposal, the Exchange will list far-term series at wider intervals until there are less than six months remaining until expiration, when intervening exercise prices will be listed at narrower intervals.

IV. Conclusion

For the foregoing reasons, the Commission finds that the PHLX's proposal is consistent with the requirements of the Act and the rules and regulations thereunder.

It is therefore ordered, pursuant to Section 19(b)(2) of the Act,[14] that the proposed rule change (File No. SR–PHLX–95–68) is approved.

For the Commission, by the Division of Market Regulation, pursuant to delegated authority.[15]

Jonathan G. Katz,

Secretary.

[FR Doc. 96–7506 Filed 3–27–96; 8:45 am]

BILLING CODE 8010–01–M

[12] *See* note 9, *supra.*

[13] For purposes of the proposal, demonstrated customer interest includes institutional (firm), corporate or customer interest expressed directly to the Exchange or through the customer's floor brokerage unit, but not interest expressed by an ROT with respect to trading for the ROT's own account. The Commission expects the PHLX to monitor the listing of additional strikes in order to ensure that new strikes are added only in response to ''customer'' requests, as defined in the proposal, or in response to a specialist's request.

[14] 15 U.S.C. § 78s(b)(2).

[15] 17 CFR 200.30–3(a)(12) (1995).

[Release No. 34–37002; File No. SR–Phlx–96–02]

Self-Regulatory Organizations; Notice of Filing of Proposed Rule Change by the Philadelphia Stock Exchange, Inc. Relating to the Adoption of Listing and Listing Maintenance Standards for Unit Investment Trusts

March 21, 1996.

Pursuant to Section 19(b)(1) of the Securities Exchange Act of 1934 (''Act''), 15 U.S.C. 78s(b)(1), notice is hereby given that on January 29, 1996, the Philadelphia Stock Exchange, Inc. (''Phlx'' or ''Exchange'') filed with the Securities and Exchange Commission (''Commission'') the proposed rule change as described in Items I, II, and III below, which Items have been prepared by the self-regulatory organization. On March 7, 1996, the Exchange submitted to the Commission Amendment No. 1 to the proposed rule change,[1] and on March 18, 1996 the Exchange submitted Amendment No. 2 to the proposed rule change.[2] The Commission is publishing this notice to solicit comments on the proposed rule change from interested persons.

I. Self-Regulatory Organization's Statement of the Terms of Substance of the Proposed Rule Change

The Exchange, pursuant to Rule 19b–4 under the Act,[3] proposes to amend Phlx Rule 803 regarding Tier I listing standards in order to add new section (i), which will set forth listing standards for unit investment trusts (''UITs'') and amend Phlx Rule 810 to add new subsections (a)(5) and (a)(6), which will set forth listing maintenance standards for UITs.

II. Self-Regulatory Organization's Statement of the Purpose of, and Statutory Basis for, the Proposed Rule Change

In its filing with the Commission, the self-regulatory organization included statements concerning the purpose of and basis for the proposed rule change and discussed any comments it received on the proposed rule change. The text of these statements may be examined at the places specified in Item IV below. The self-regulatory organization has prepared summaries, set forth in Sections A, B, and C below, of the most significant aspects of such statements.

A. Self-Regulatory Organization's Statement of the Purpose of, and Statutory Basis for, the Proposed Rule Change

1. Purpose

The Exchange proposes to add new section (i) to Phlx Rule 803, the Tier I listing criteria, to adopt listing standards applicable to UITs, which are distinct trading components representing discrete interests in the income, capital appreciation potential or other economic characteristics of the securities deposited in a trust. Such a trust may be based upon the securities of individual issuers, upon a portfolio of stocks included in a domestic, broad-based stock market index, or upon a portfolio or domestic money market instruments or other debt securities. A UIT would be defined as any share, unit or other interest in or relating to a unit investment trust, including any component resulting from the

[1] *See* Letter from Michele R. Weisbaum, Assistant General Counsel, Phlx, to Jon Kroeper, Staff Attorney, SEC, dated March 5, 1996. *See infra* note 4 and text accompanying note 5 for a description of Amendment No. 1.

[2] *See* Letter from Michele R. Weisbaum, Associate General Counsel, Phlx, to Jon Kroeper, Staff Attorney, SEC, dated March 15, 1996. Amendment No. 2 added UIT listing maintenance standards to the proposed rule change. *See infra* text accompanying notes 6 and 7 for a description of Amendment No. 2.

[3] 17 CFR 240.19b–4.

subdivision or separation of such an interest.[4]

Pursuant to proposed subsection 803(i)A, UITs based upon securities of individual issuers may be listed on the Exchange under the following requirements. First, the issuer(s) of the security (or securities) held by the trust must have total assets in excess of $100 million and a net worth in excess of $10 million. Second, there must be at least one million units held beneficially or of record by 800 round lot holders and the UIT cannot hold in excess of 5% of the outstanding common or capital stock of any single issuer. Third, the stated term of the trust may not be less than three years and the units may not be subject to redemption at the election of the trustees prior to the end of the stated term of the trust.[5] Fourth, the trustee of the UIT must be a trust company or banking institution and its executive officer cannot be an officer of the issuing sponsor. Fifth, any voting rights conferred by the UIT interests may be divided between the separate components of the units and must be passed through to beneficial holders of the UIT interests and shareholder communications must be forwarded by the trust to the holders of the voting rights, to the extent that the UIT is reimbursed by the issuer for reasonable expenses. Finally, the UIT must sign a listing agreement with the Exchange which requires compliance with all other provisions of the 800 Series of Phlx Rules applicable to listed companies.

Pursuant to proposed subsection 803(i)B, UITs based on stock indexes or debt instruments may be listed on the Exchange under the following requirements. First, the trust must have total assets of at least $60 million at the time of formation and at least one million shares, units or components that are publicly distributed to at least 400 beneficial or record holders. Second, such UITs cannot have a stated term of less than two years; however, they may be subject to earlier termination if the circumstances under which this may occur are set forth in the trust's governing documents. Third, any voting rights conferred by the UIT interests may be divided between separate components of the units but must be passed through to the beneficial holders of the UIT interests. Fourth, the trustee must be a trust company or banking institution. Finally, the UIT must sign a listing agreement with the Exchange which requires compliance with all other provisions of the 800 Series of Rules applicable to listed companies.[6]

The Exchange also is proposing to adopt listing maintenance standards for UITs under new subsection (a)(5) and (a)(6) to Phlx Rule 810. Proposed Rule 810(a)(5) will permit the Exchange to suspend trading in, or remove from listing, a UIT listed under Rule 803(i)A if the financial condition and/or operating results of the issuer of the securities held by the trust appear to be unsatisfactory, as determined by the existence of one or more of the following criteria: (i) the net tangible assets of the issuer of the securities held by the UIT are not at least $2 million if the issuer has sustained losses from continuing operations and/or net losses in two of its three most recent fiscal years, or $4 million if it has such losses in three of its four most recent fiscal years; (ii) the total assets and net worth of the issuer of the securities held by the UIT are less than $25 million and $4 million, respectively; (iii) there are less than 400 record and/or beneficial holders of the trust units (or trading components thereof); (iv) less than 300,000 trust units (or trading components thereof) remain outstanding; (v) the issuer of the securities held by the UIT has sold or otherwise disposed of its principal operating assets, or has ceased to be an operating company; (vi) the UIT and/or trustee has failed to comply with the Phlx's listing policies or agreements; or (vii) such other event shall occur or conditions exist which, in the Exchange's opinion, makes further dealings on the Exchange inadvisable.[7]

Proposed Rule 810(a)(6) will permit the Exchange to suspend trading in, or remove from listing, a UIT listed pursuant to Rule 803(i)B if one of the following criteria is met: (i) more than 60 days remain until the termination of the UIT and there are less than 50 record and/or beneficial holders of shares, units or trading components thereof for 20 or more consecutive trading days; (ii) the UIT and/or trustee has failed to comply with the Phlx's listing policies or agreements; or (iii) such other event has occurred or condition exists which, in the Exchange's opinion, makes further dealings on the Exchange inadvisable.[8]

2. Statutory Basis

The proposed rule change is consistent with Section 6(b) of the Act[9] in general, and in particular, with Section 6(b)(5) in that it is designed to prevent fraudulent and manipulative acts and practices, to promote just and equitable principles of trade, to foster cooperation and coordination with persons engaged in regulating, clearing, settling, processing information with respect to, and facilitating transactions in securities, to remove impediments to and perfect the mechanism of a free and open market and a national market system, as well as to protect investors and the public interest.

B. Self-Regulatory Organization's Statement on Burden on Competition

The Exchange does not believe that the proposed rule change will impose any inappropriate burden on competition.

C. Self-Regulatory Organization's Statement on Comments on the Proposed Rule Change Received From Members, Participants, or Others

No written comments were either solicited or received.

III. Date of Effectiveness of the Proposed Rule Change and Timing for Commission Action

Within 35 days of the publication of this notice in the Federal Register or within such longer period (i) as the Commission may designate up to 90 days of such date if it finds such longer period to be appropriate and publishes its reasons for so finding or (ii) as to which the self-regulatory organization consents, the Commission will:

(A) by order approve the proposed rule change, or

(B) institute proceedings to determine whether the proposed rule change should be disapproved.

IV. Solicitation of Comments

Interested persons are invited to submit written data, views, and arguments concerning the foregoing. Persons making written submissions should file six copies thereof with the

[4] The Commission notes that prior to listing and trading a UIT based on an index, money market instrument, or debt securities that the Commission has not previously reviewed, the Exchange would have to file a proposed rule change pursuant to Rule 19b–4 under the Act. Such a filing should, among other relevant issues, address any issues arising under the Investment Company Act of 1940 with regard to the listing and trading of a UIT under proposed Rule 803A(i). In addition, the Phlx would be required to adopt appropriate suitability standards for both the trading of any UIT which may be separated into component parts and the component parts themselves.

[5] Amendment No. 1 amends proposed subsection 803(i)A(3), which deals with the stated term of a UIT, to add the following provisions: (1) a listed trust may have only one termination date; (2) individual trading components of the trust units may have only one termination claim; and, (3) only one UIT may have only one termination claim; and, (3) only one UIT on the securities of a single issuer may be listed at a time.

[6] *See* Amendment No. 1, *supra* note 1.

[7] *See* Amendment No. 2, *supra* note 2.

[8] *See* Amendment No. 2, *supra* note 2.

[9] 15 U.S.C. 78f(b).

Secretary, Securities and Exchange Commission, 450 Fifth Street, NW., Washington, DC 20549. Copies of the submission, all subsequent amendments, all written statements with respect to the proposed rule change that are filed with the Commission, and all written communications relating to the proposed rule change between the Commission and any person, other than those that may be withheld from the public in accordance with the provisions of 5 U.S.C. 552, will be available for inspection and copying at the Commission's Public Reference Section, 450 Fifth Street, NW., Washington, DC 20549. Copies of such filing will also be available for inspection and copying at the principal office of the Exchange. All submissions should refer to File No. SR–Phlx–96–02 and should be submitted by April 18, 1996.

For the Commission, by the Division of Market Regulation, pursuant to delegated authority.

Jonathan G. Katz,

Secretary.

[FR Doc. 96–7508 Filed 3–27–96; 8:45 am]

BILLING CODE 8010–01–M

SELECTIVE SERVICE SYSTEM

Forms Submitted to the Office of Management and Budget for Extension of Clearance

The following forms have been submitted to the Office of Management and Budget (OMB) for extension of clearance in compliance with the Paperwork Reduction Act (44 U.S. Chapter 35):

SSS–2, 3B, 3C

Title: The Selective Service System Change of Information, Correction/Change Form and Registration Status Forms.

Purpose: To insure the accuracy and completeness of the Selective Service System registration data.

Respondents: Registrants are required to report changes or corrections in data submitted on SSS Form 1.

Frequency: When changes in a registrant's name or address occur.

Burden: The reporting burden is two minutes or less per report.

Copies of the above identified forms can be obtained upon written request to: Selective Service System, Reports Clearance Officer, 1515 Wilson Boulevard, Arlington, Virginia, 22209–2425.

Written comments and recommendations for the proposed extension of clearance of the forms should be sent within 30 days of publication of this notice, to: Selective Service System, Reports Clearance Officer, 1515 Wilson Boulevard, Arlington, Virginia, 22209–2425.

A copy of the comments should be sent to: Office of Information and Regulatory Affairs, Attention: Desk Officer, Selective Service System, Office of Management and Budget, New Executive Office Building, Room 3235, Washington, DC 20503.

Dated: March 20, 1996.

Gil Coronado,

Director.

[FR Doc. 96–7512 Filed 3–27–96; 8:45 am]

BILLING CODE 8015–01–M

SMALL BUSINESS ADMINISTRATION

Salt Lake City Advisory Council Meeting Public Meeting

The U.S. Small Business Administration, Salt Lake City, Utah District Advisory Council will hold a public meeting on Tuesday, April 23, 1996 at 9:00 a.m. at the Executive Board Room of First Interstate Bank, at 180 South Main Street, Salt Lake City, to discuss matters as may be presented by members, staff of the U.S. Small Business Administration, or others present.

For further information, write or call Mr. Stan Nakano, District Director, U.S. Small Business Administration, 125 South State Street, Salt Lake City, Utah 84138, (801) 524–5804.

Dated: March 22, 1996.

Bill Combs,

Associate Administrator for Office of Communication and Public Liaison.

[FR Doc. 96–7533 Filed 3–27–96; 8:45 am]

BILLING CODE 8025–01–P

DEPARTMENT OF TRANSPORTATION

Office of the Secretary

Hellenikon International Airport, Athens, Greece; Notification of Ineffective Security Measures

Pursuant to 49 U.S.C. 44907d(1), on November 22, 1995, I notified the government of the Republic of Greece that I had determined that Hellenikon International Airport, Athens, Greece, did not maintain and carry out effective security measures. Ninety days have elapsed since my determination, and I have found that Hellenikon International Airport still does not maintain and carry out effective security measures. My determination is based on Federal Aviation Administration assessments which reveal that security measures used at the airport do not meet the standards established by the International Civil Aviation Organization.

Pursuant to 49 U.S.C. 44907d(1), I have directed that a copy of this notice be published in the Federal Register, that my determination be displayed prominently in all U.S. airports regularly being served by scheduled air carrier operations, and that the news media be notified of my determination. in addition, as a result of this determination, all U.S. air carriers and foreign air carriers (and their agents) providing service between the United States and Hellenikon International Airport must provide notice of my determination to any passenger purchasing a ticket for transportation between the United States and Hellenikon International Airport, with such notice to be made by written material included on or with such ticket.

Dated: March 21, 1996.

Federico Peña,

Secretary of Transportation.

[FR Doc. 96–7564 Filed 3–27–96; 8:45 am]

BILLING CODE 4910–62–P

Federal Highway Administration

Environmental Impact Statement; Pitkin County, CO

AGENCY: Federal Highway Administration, (FHWA), Colorado State Department of Transportation (CDOT).

ACTION: Revised notice of intent.

SUMMARY: The FHWA is issuing this revised notice to advise the public that the CDOT is preparing a supplement to the August 1995, Draft Environmental Impact Statement/4(f) Evaluation (DEIS/4(f)) for State Highway 82 Entrance to Aspen Project in Pitkin County, Colorado.

FOR FURTHER INFORMATION CONTACT:

Mr. Ron Speral, Environmental/Right-of-Way Engineer, Colorado Division, Federal Highway Administration, 555 Zang Street, Lakewood, Colorado 80228, (303) 969–6737, ext. 368

Mr. Ralph Trapani, Project Manager, Colorado Department of Transportation, 202 Centennial Drive, Glenwood Springs, Colorado 81601, (970) 945–7629

SUPPLEMENTARY INFORMATION: On February 23, 1994, a Notice of Intent was published in the Federal Register

advising the public that an Environmental Impact Statement (EIS) would be prepared for the above-mentioned project. The Draft EIS/4(f) (DEIS/4(f)) was made available to the public on August 4, 1995. On August 4, 1995, A Notice of Availability of the DEIS/4(f) was published in the Federal Register. As a result of public comments additional alternatives have been proposed, including new termini, which may change the proposed action, and which may result in significant environmental impacts that were not as set out in the DEIS. Pursuant to 23 CFR 771.130(a) a Supplemental DEIS/4(f) (SDEIS/4(f)) is considered necessary.

A public hearing will be held in the vicinity of the project following the release of the SDEIS/4(f). Public notice will be given of the time and place of the public hearing. The SDEIS/4(f) will be available for public and agency review and comment at the time of the hearing.

Issued on March 19, 1996.

Charmaine Farrar,

Program Development Engineer, FHWA, Lakewood, Colorado.

[FR Doc. 96–7581 Filed 3–27–96; 8:45 am]

BILLING CODE 4910–22–M

Federal Railroad Administration

[BS–AP–No. 3381 and BS–AP–No. 3382]

Central Oregon and Pacific Railroad; Public Hearing

The Central Oregon and Pacific Railroad has petitioned the Federal Railroad Administration (FRA) seeking approval of the proposed discontinuance and removal of the automatic block signal system, on the single main track, between Ashland, Oregon, milepost 429.1 and Glendale, Oregon, milepost 510.0, on the Siskiyou Line, a distance of approximately 81 miles, and between Cornutt, Oregon, milepost 538.8 and Springfield Junction, Oregon, milepost 644.3, on the Siskiyou Line, a distance of approximately 105.5 miles.

These proceedings are identified as FRA Block Signal Application Numbers 3381 and 3382 respectively.

FRA has issued a public notice seeking comments of interested parties and is conducting a field investigation in this matter. After examining the proposal FRA has determined that a public hearing is necessary before a final decision is made on this proposal.

Accordingly, a public hearing is hereby set for 9:00 a.m. on Thursday, April 25, 1996, in the Roseburg City Hall, City Council Chambers, located at 900 South East Douglas, Roseburg, Oregon. Interested parties are invited to present oral statements at the hearing.

The hearing will be an informal one and will be conducted in accordance with Rule 25 of the FRA Rules of Practice (Title 49 CFR Part 211.25), by a representative designated by the FRA.

The hearing will be a nonadversary proceeding and, therefore, there will be no cross-examination of persons presenting statements. The FRA representative will make an opening statement outlining the scope of the hearing. After all initial statements have been completed, those persons wishing to make brief rebuttal statements will be given the opportunity to do so in the same order in which they made their initial statements. Additional procedures, if necessary for the conduct of the hearing, will be announced at the hearing.

Issued in Washington, D.C. on March 21, 1996.

Phil Olekszyk,

Deputy Associate Administrator for Safety Compliance and Program Implementation.

[FR Doc. 96–7426 Filed 3–27–96; 8:45 am]

BILLING CODE 4910–06–M

Research and Special Programs Administration

[Docket PS–148]

Notice of Proposed Collection; Comment Request

AGENCY: Research and Special Programs Administration, DOT.

ACTION: Notice and request for comments.

SUMMARY: In accordance with the Paperwork Reduction Act of 1995, this notice announces the Research and Special Programs Administration's (RSPA) intention to request extension of an existing information collection in support of the Office of Pipeline Safety (OPS) for Management Information System (MIS) Standardized Data Collection and Reporting of Drug Testing Materials.

DATES: Comments on this notice must be received on or before May 28, 1996 to be assured of consideration.

FOR FURTHER INFORMATION CONTACT: Marvin Fell, Office of Pipeline Safety, Research and Special Programs Administration, Department of Transportation, 400 Seventh Street, S.W. Washington, D.C. 20950, (202) 366–1640.

SUPPLEMENTARY INFORMATION:

Title: Management Information System (MIS) Standardized Data Collection and Reporting of Drug Testing Materials.

OMB Number: 2137–0579.

Expiration Date of Approval: 12/31/96.

Type of Request: Extension of an existing information collection.

Abstract: This rule requiring information and recordkeeping procedures on drug testing is found in 49 CFR sections 199.1–199.25. This annual data collection is the basis for monitoring implementation and addressing compliance and enforcement issues and evaluating the overall effectiveness of the operator's drug testing programs.

Estimate of Burden: The average burden hours per response is 5.96 hours.

Respondents: Pipeline operators.

Estimated Number of Respondents: 2,419.

Estimated Number of Responses per Respondent: 1.

Estimated Total Annual Burden on Respondents: 12,809 hours.

Copies of this information collection can be reviewed at the Dockets Unit, Room 8421, Research and Special Programs Administration, U.S. Department of Transportation, 400 Seventh St., S.W. Washington, D.C.

Comments are invited on: (a) The need for the proposed collection of information for the proper performance of the functions of the agency, including whether the information will have practical utility; (b) the accuracy of the agency's estimate of the burden of the proposed collection of information including the validity of the methodology and assumptions used; (c) ways to enhance the quality, utility and clarity of the information to be collected; and (d) ways to minimize the burden of the collection of information on those who are to respond, including the use of appropriate automated, electronic, mechanical, or other technological collection techniques. Send written comments to the Dockets Unit, Room 8421, Research and Special Programs Administration, U.S. Department of Transportation, 400 7th Street, S.W., Washington, DC 20590–0001.

All responses to this notice will be summarized and included in the request for OMB approval. All comments will also be a matter of public record.

Issued in Washington, DC on March 22, 1996.

Richard B. Felder,

Associate Administrator for Pipeline Safety.

[FR Doc. 96–7563 Filed 3–27–96; 8:45 am]

BILLING CODE 4910–60–P

DEPARTMENT OF THE TREASURY

Internal Revenue Service

Proposed Collection; Comment Request for Form 1078

AGENCY: Internal Revenue Service (IRS), Treasury.

ACTION: Notice and request for comments.

SUMMARY: The Department of the Treasury, as part of its continuing effort to reduce paperwork and respondent burden, invites the general public and other Federal agencies to take this opportunity to comment on proposed and/or continuing information collections, as required by the Paperwork Reduction Act of 1995, Public Law 104–13 (44 U.S.C. 3506(c)(2)(A)). Currently, the IRS is soliciting comments concerning Form 1078, Certificate of Alien Claiming Residence in the United States.

DATES: Written comments should be received on or before May 28, 1996, to be assured of consideration.

ADDRESSES: Direct all written comments to Garrick R. Shear, Internal Revenue Service, room 5571, 1111 Constitution Avenue NW., Washington, DC 20224.

FOR FURTHER INFORMATION CONTACT: Requests for additional information or copies of the form(s) and instructions should be directed to Martha R. Brinson, (202) 622–3869, Internal Revenue Service, room 5571, 1111 Constitution Avenue NW., Washington, DC 20224.

SUPPLEMENTARY INFORMATION:

Title: Certificate of Alien Claiming Residence in the United States.

OMB Number: 1545–1482.

Form Number: Form 1078.

Abstract: Form 1078 is used by an alien to claim residence in the United States for income tax purposes.

Current Actions: There are no changes being made to the form at this time.

Type of Review: Extension of a currently approved collection.

Affected Public: Individuals or households and business or other for-profit organizations.

Estimated Number of Respondents: 10,000.

Estimated Time per Respondent: 49 min.

Estimated Total Annual Burden Hours: 8,200.

REQUEST FOR COMMENTS: Comments submitted in response to this notice will be summarized and/or included in the request for OMB approval. All comments will become a matter of public record. Comments are invited on: (a) Whether the collection of information is necessary for the proper performance of the functions of the agency, including whether the information shall have practical utility; (b) the accuracy of the agency's estimate of the burden of the collection of information; (c) ways to enhance the quality, utility, and clarity of the information to be collected; and (d) ways to minimize the burden of the collection of information on respondents, including through the use of automated collection techniques or other forms of information technology.

Approved: March 18, 1996.

Garrick R. Shear,

IRS Reports Clearance Officer.

[FR Doc. 96–7610 Filed 3–27–96; 8:45 am]

BILLING CODE 4830–01–U

Nonconventional Source Fuel Credit; Publication of Reference Price for Calendar Year 1995

AGENCY: Internal Revenue Service (IRS), Treasury.

ACTION: Publication of reference price for calendar year 1995 as required by section 29 of the Internal Revenue Code (26 U.S.C. section 29).

SUMMARY: The inflation adjustment factor, nonconventional source fuel credit, and reference price are used in determining the availability of the tax credit for production of fuel from nonconventional sources under section 29.

DATES: The 1995 inflation adjustment factor, nonconventional source fuel credit, and reference price apply to qualified fuels sold during calendar year 1995.

PRICE: The reference price for calendar year 1995 is $14.62. Because the above reference price will not exceed $23.50 multiplied by the inflation adjustment factor, the phaseout of credit provided for in section 29(b)(1) will not occur for any qualified fuel based on the above reference price.

INFLATION FACTOR AND CREDIT: The inflation adjustment factor for calendar year 1995 is not yet available. The inflation adjustment factor and the nonconventional source fuel credit for 1995 will be published as soon as they are known.

FOR FURTHER INFORMATION CONTACT: David McMunn, CC:DOM:P&SI:6, Internal Revenue Service, 1111 Constitution Ave., NW., Washington, DC 20224, Telephone Number (202) 622–3110 (not a toll-free number).

Judith C. Dunn,

Associate Chief Counsel (Domestic).

[FR Doc. 96–7609 Filed 3–27–96; 8:45 am]

BILLING CODE 4830–01–U

Tax on Certain Imported Substances (Butyl Benzyl Phthalate); Notice of Determination

AGENCY: Internal Revenue Service (IRS), Treasury.

ACTION: Notice.

SUMMARY: This notice announces a determination, under Notice 89–61, that the list of taxable substances in section 4672(a)(3) will be modified to include butyl benzyl phthalate.

EFFECTIVE DATE: This modification is effective April 1, 1991.

FOR FURTHER INFORMATION CONTACT: Ruth Hoffman, Office of Assistant Chief Counsel (Passthroughs and Special Industries), (202) 622–3130 (not a toll-free number).

SUPPLEMENTARY INFORMATION:

Background

Under section 4672(a), an importer or exporter of any substance may request that the Secretary determine whether that substance should be listed as a taxable substance. The Secretary shall add the substance to the list of taxable substances in section 4672(a)(3) if the Secretary determines that taxable chemicals constitute more than 50 percent of the weight, or more than 50 percent of the value, of the materials used to produce the substance. This determination is to be made on the basis of the predominant method of production. Notice 89–61, 1989–1 C.B. 717, sets forth the rules relating to the determination process.

Determination

On March 22, 1996, the Secretary determined that butyl benzyl phthalate should be added to the list of taxable substances in section 4672(a)(3), effective April 1, 1991.

The rate of tax prescribed for butyl benzyl phthalate, under section 4671(b)(3), is $5.54 per ton. This is based upon a conversion factor for methane of 0.05, a conversion factor for propylene of 0.17, a conversion factor for xylene of 0.47, a conversion factor for toluene of 0.32, and a conversion factor for chlorine of 0.26.

The petitioner is Monsanto Company, a manufacturer and exporter of this substance. No material comments were received on this petition. The following

information is the basis for the determination.

HTS number: 2917.39.2000
CAS number: 85–68–7

Butyl benzyl phthalate is derived from the taxable chemicals methane, propylene, xylene, toluene, and chlorine and is a liquid produced predominantly by the reaction of n-butanol and phthalic anhydride, followed by a reaction with benzyl chloride in the presence of a catalyst. n-butanol is manufactured by the hydrogenation of n-butyraldehyde, which is derived from propylene and synthesis gas (hydrogen and synthesis gas are derived from natural gas). Benzyl chloride is produced by direct photochemical chlorination of toluene. Phthalic anhydride is produced by the reaction of o-xylene with air in the presence of a catalyst.

The stoichiometric material consumption formula for this substance is:

CH_4 (methane)+C_3H_6 (propylene)+C_8H_{10} (xylene)+3 O_2 (oxygen)+C_7H_8 (toluene)+Cl_2 (chlorine) ————>$C_{19}H_{20}O^4$ (butyl benzyl phthalate)+2 HCl (hydrochloric acid)+H_2 (hydrogen)+2 H_2O (water).

Butyl benzyl phthalate has been determined to be a taxable substance because a review of its stoichiometric material consumption formula shows that, based on the predominant method of production, taxable chemicals constitute 77.25 percent by weight of the materials used in its production.

Dale D. Goode,

Federal Register Liaison Officer, Assistant Chief Counsel (Corporate).

[FR Doc. 96–7608 Filed 3–27–96; 8:45 am]

BILLING CODE 4830–01–U

UNITED STATES INFORMATION AGENCY

Community Connections

ACTION: Notice—Request for Proposals.

SUMMARY: The Office of Citizen Exchanges, Russia/Eurasia Division of the United States Information Agency's Bureau of Educational and Cultural Affairs announces an open competition for an assistance award. Public and private non-profit organizations meeting the provisions described in IRS regulation 26 CFR 1.501 (c)(3)–1 may apply to organize and implement community-based, professional programs for entrepreneurs, legal professionals and government officials from Ukraine and Moldova. The objective of Community Connections is to enhance the participants' skills in business and entrepreneurship, law, and local governance upon returning to Ukraine and Moldova. USIA is interested in proposals that provide both professional experience and exposure to American life and culture through internships hosted by U.S. businesses and local governmental and legal institutions, and homestays with local community members. This program is not academic in nature; rather, it is designed to provide practical, hands-on training in American business and in legal and public sector environments which can be transferred to the individual's professional career at home. The Agency welcomes innovative proposals which combine elements of professional enrichment, job shadowing and internships appropriate to the language ability and interests of the participants.

Overall grant making authority for this program is contained in the Mutual Educational and Cultural Exchange Act of 1961, Public Law 87–256, as amended, also known as the Fulbright-Hays Act. The purpose of the Act is ''to enable the Government of the United States to increase mutual understanding between the people of the United States and the people of other countries * * *; to strengthen the ties which unite us with other nations by demonstrating the educational and cultural interests, developments, and achievements of the people of the United States and other nations * * * and thus to assist in the development of friendly, sympathetic and peaceful relations between the United States and the other countries of the world.'' The funding authority for the program cited above is provided through the *FREEDOM* Support Act. Programs and projects must conform with Agency requirements and guidelines outlined in the Solicitation Package. USIA projects and programs are subject to the availability of funds.

ANNOUNCEMENT TITLE AND NUMBER: All communications with SLUA concerning this announcement should refer to the above title and reference number E/PN–96–32.

DEADLINE FOR PROPOSALS: All copies must be received at the U.S. Information Agency by 5 p.m. Washington, D.C. time on Tuesday, April 30, 1996. Faxed documents will not be accepted, nor will documents postmarked April 30, 1996 but received at later date. It is the responsibility of each applicant to ensure that proposals are received by the above deadline.

FOR FURTHER INFORMATION CONTACT: The Office of Citizen Exchanges, Russia/Eurasia Division, E/PN Room 216, U.S. Information Agency, 301 4th Street SW., Washington, D.C. 20547, Phone: (202) 619–5326, fax: (202) 619–4350, internet: jdelgiud@usia.gov to request a Solicitation Package containing more detailed award criteria, required application forms, and standard guidelines for preparing proposals, including specific criteria for preparation of the proposal budget.

TO DOWNLOAD A SOLICITATION PACKAGE VIA INTERNET: The Solicitation Package may be downloaded from USIA'S website at http://www.usia.gov/ or from the Internet Gopher at gopher://gopher.usia.gov. Select ''Education and Cultural Exchanges'', then select ''Current Request for Proposals (RFPs).'' Please read ''About the following RFPs before beginning to download.

Please specify USIA Program Assistant James Del Giudice on all inquiries and correspondences. Interested applicants should read the complete Federal Register announcement before sending inquiries or submitting proposals. Once the RFP deadline has passed, Agency staff may not discuss this competition in any way with applicants until the Bureau proposal review process has been completed.

SUBMISSIONS: Applicants must follow all instructions given in the Solicitation Package. The original and 12 copies of the application should be sent to: U.S. Information Agency, Ref.: E/PN–96–32, Office of Grants Management, E/XE, Room 326, 301 4th Street, SW., Washington, DC 20547.

DIVERSITY GUIDELINES: Pursuant to the Bureau's authorizing legislation, programs must maintain a non-political character and should be balanced and representative of the diversity of American political, social, and cultural life. ''Diversity'' should be interpreted in the broadest sense and encompass differences including, but not limited to ethnicity, race, gender, religion, geographic location, socio-economic status, and physical challenges. Applicants are strongly encouraged to adhere to the advancement of this principle both in program administration and in program content. Please refer to the review criteria under the 'Support for Diversity' section for specific suggestions on incorporating diversity into the total proposal.

SUPPLEMENTARY INFORMATION:

Overview

Community Connections seeks to establish and strengthen links between American communities and communities in Ukraine and Moldova.

Community Connections will focus on business (particularly entrepreneurship), the legal profession and its relationship to the administration of justice, and issue of concern for local government. Pending the availability of funds, approximately 325 Ukrainian business people, 160 Ukrainian legal professionals, 160 Ukrainian local government officials, 50 Moldovan business people, 25 Moldovan legal professionals, and 25 Moldovan local government officials will be recruited from selected regions of Ukraine and Moldova by experienced U.S. organizations with offices in Ukraine and Moldova. The program will recruit both English-speaking participants and participants with little or no English-language skills in order to expand the reach and impact of Community Connections.

Guidelines

In order to make the most effective use of the limited financial resources available while, at the same time, maintaining a maximum degree of program flexibility, the Office of Citizen Exchanges asks that interested organizations submit proposals to host no fewer than 30 participants in total. Organizations must host at least one group of participants each from two of the three subject components of the program. Groups of legal professionals and local government officials may not be smaller than 10 participants. Programs for business people will be from four to five weeks in length; programs for legal professionals will be from three to four weeks in length; and programs for government officials will be from two to three weeks in length. Programs are to be conducted between October 1, 1996, and December 31, 1997. Care must be taken to allow sufficient time between programs to adequately prepare for the following group. Organizations proposing to develop programs for additional groups of interns beyond the minimum must demonstrate that they have either allowed for sufficient preparatory time between programs or have the necessary human, physical and financial resources to adequately handle any overlap. The Agency strongly prefers that all programs be completed by December 31, 1997.

Recruitment for the ''Community Connections'' program will be conducted by experienced American organizations with offices in Ukraine and Moldova. All candidates for placement in the U.S. will be selected no later than December 1996. The first group of participants will be selected by August 1996 for arrival in the United States no earlier than October 1, 1996. Participants will be assigned to U.S. host communities by the Office of Citizen Exchanges based on the following factors: Existing ties between the regions of origin of the participants, the locations of the U.S. grantee organizations (e.g. Sister City ties), the professional interests of the participants, and the areas of strength of U.S. grantee organizations.

A proposal's cost-effectiveness, including in-kind contributions and ability to keep administrative costs low, is a major consideration in the review process. Cost-sharing may be in the form of allowable direct or indirect costs. The Recipient must maintain written records to support all allowable costs which are claimed as being its contribution to cost participation, as well as costs to be paid by the Federal Government. Such records are subject to audit. The basis for determining the value of cash and in-kind contributions must be in accordance with OMB Circular A–110, Attachment E, ''Cost-Sharing and Matching'' and should be described in the proposal. In the event that the Recipient does not provide the minimum amount of cost-sharing as stipulated in the Recipient's budget, the Agency's contribution.

Proposed Budget

Organizations must submit a comprehensive line item budget based on the specific guidance in the Solicitation Package. Average per capita cost for participants hosted should not exceed $6,300.

Grants awarded to eligible organizations with less than four years of experience in conducting international exchange programs will be limited to $60,000.

Review Process

USIA will acknowledge receipt of all proposals and will review them for technical eligibility. Proposals will be deemed ineligible if they do not fully adhere to the guidelines stated herein and in the Solicitation Package. Eligible proposals will be forwarded to panels of USIA officers for advisory review. All eligible proposals will be reviewed by the program office, as well as the USIA Office of Eastern European and NIS Affairs and the USIA posts in Ukraine and Moldova. Proposals may be reviewed by the Office of the General Counsel or by other Agency elements. Funding decisions are at the discretion of the USIA Associate Director for Educational and Cultural Affairs. Final technical authority for assistance awards (grants or cooperative agreements) resides with the USIA grants officer.

Review Criteria

Technically eligible applications will be competitively reviewed according to the criteria stated below:

1. Program planning and ability to achieve objectives: Detailed agenda and relevant work plan should demonstrate careful and thorough preparation to carry out substantive programs which have a high likelihood of achieving program objectives. Agenda and plan should adhere to the program overview and guidelines described above. Objectives should be reasonable, feasible, and flexible.

2. Institutional capability: Organization should demonstrate sufficient skills and experience in hosting visitors from other countries and ability to utilize local business, legal and governmental resources and voluntary support. Thematic expertise in project subject areas should be demonstrated.

3. Cost-effectiveness: The overhead and administrative components of the proposal, including salaries and honoraria, should be kept as low as possible. All other items should be necessary and appropriate. Proposals should also maximize cost-sharing through other private sector support as well as institutional direct funding contributions.

4. Support of Diversity: Proposals should demonstrate the recipient's commitment to promoting the awareness and understanding of diversity.

Notice

The terms and conditions published in this RFP are binding and may not be modified by any USIA representative. Explanatory information provided by the Agency that contradicts published language will not be binding. Issuance of the RFP does not constitute an award commitment on the part of the Government. The Agency reserves the right to reduce, revise, or increase proposal budgets in accordance with the needs of the program and the availability of funds. Awards made will be subject to periodic reporting and evaluation requirements.

Notification

Final awards cannot be made until funds have been appropriated by Congress, allocated and committed through internal USIA procedures.

Dated: March 21, 1996.

Dell Pendergrast,

Deputy Associate Director for Educational and Cultural Affairs.

[FR Doc. 96–7467 Filed 3–27–96; 8:45 am]

BILLING CODE 8230–01–M

federal register

Thursday
March 28, 1996

Part II

Department of Transportation

Coast Guard

33 CFR Part 175, et al.

46 CFR Part 2, et al.

Approval of Inflatable Personal Flotation Devices (PFDs) for Recreational Boaters and Standards; Final Rules

DEPARTMENT OF TRANSPORTATION

Coast Guard

33 CFR Parts 175, 179 and 181

46 CFR Parts 2, 159, and 160

[CGD 93–055]

RIN 2115–AE58

Approval of Inflatable Personal Flotation Devices (PFDs) for Recreational Boaters

AGENCY: Coast Guard, DOT.

ACTION: Final rule.

SUMMARY: As part of the Presidential Regulatory Reform Initiative, the Coast Guard is establishing approval procedures for recreational inflatable personal flotation devices (PFDs), designating recreational inflatable PFDs as ''associated equipment'' for purposes of defect notification, revising the approval procedures for other kinds of recreational PFDs, and making editorial changes. These procedures are intended to establish an efficient approval procedure for PFDs. The Coast Guard anticipates that recreational boaters will be more likely to wear inflatable PFDs than currently approved devices, thereby increasing use of PFDs by the boating public and saving lives.

DATES: This rule is effective on April 29, 1996. The Director of the Federal Register approves as of April 29, 1996 the incorporation by reference of certain publications listed in the regulations.

FOR FURTHER INFORMATION CONTACT: Mr. Kurt J. Heinz, Marine Safety and Environmental Protection Directorate, Lifesaving and Fire Safety Standards Branch (G–MMS–4), telephone (202) 267–1444, facsimile (202) 267–1069, or electronic mail ''Kurt____Heinz/G–M@cgsmtp.uscg.mil''.

SUPPLEMENTARY INFORMATION:

Regulatory History

On November 9, 1993, the Coast Guard published an Advance Notice of Proposed Rulemaking (ANPRM) entitled ''Inflatable Personal Flotation Devices'' in the Federal Register (58 FR 59428). The ANPRM addressed structural and performance standards for inflatable PFDs, and procedures for approval and carriage requirements. On June 23, 1995, the Coast Guard published a notice of proposed rulemaking (NPRM) entitled ''Approval of Inflatable Personal Flotation Devices (PFDs) for Recreational Boaters'' in the Federal Register (60 FR 32861). The Coast Guard received 3 letters commenting on the NPRM. No public hearing was requested and none was held.

Background and Purpose

In the same Federal Register as the NPRM for this rulemaking, the Coast Guard published an interim rule (IR) containing structural and performance standards for recreational inflatable personal flotation devices (60 FR 32836). Limited procedures to allow for approval of these devices were included in the IR. The NPRM for this rulemaking proposed, as part of the Presidential Regulatory Reform Initiative, a reinvention of the process for approval of inflatable and other PFDs for recreational boats. The proposed rules would remove duplicative requirements from multiple subparts dealing with various types of PFDs, and allow for wider participation of independent laboratories in the approval process. These proposed rules were not published as part of the IR because they may affect the approval of other types of PFDs to a limited extent and the public had not yet had a chance to fully participate in their development.

Discussion of Comments and Changes

The NPRM proposed to designate inflatable PFDs as ''associated equipment'' in 33 CFR Part 179 in accordance with 46 U.S.C. 4310. The effect of this designation would be to require manufacturers to establish and maintain a list of first purchasers of inflatable PFDs, and to notify those purchasers of any defects which have been discovered after the PFDs have been produced and sold.

Comments on this proposed provision were received from two PFD manufacturers and from the association representing PFD manufacturers. All three comments opposed the proposal. The association's comment suggested that designation of inflatable PFDs as ''associated equipment'' would place an inappropriate and inconsistent burden on inflatable PFDs in relation to requirements for other items of personal protection equipment. The two manufacturers' comments noted that the designation of inflatable PFDs as ''associated equipment'' did not appear to be consistent with the items which are currently so designated, i.e., inboard and outboard engines and stern drive units.

The Coast Guard does not agree with the comments which opposed designation of inflatable PFDs as ''associated equipment'' based solely on perceived similarity, or lack of similarity, to existing equipment. In the recreational boating arena, approved inflatable PFDs are an entirely new class of equipment with which the Coast Guard and the boating public have had little practical experience. The Coast Guard is concerned that as manufacturers begin producing approved inflatable PFDs for the recreational boating market for the first time, there may be latent defects in manufacturing or materials introduced into the product which would become apparent only after extended use and exposure in the marine environment. The provisions in 46 U.S.C. 4310(c)(1)(A) for notification of first purchasers of ''associated equipment'' in the event of known defects or failures of compliance would facilitate the widespread introduction of inflatable PFDs into this unfamiliar market with a minimum of risk to both users and manufacturers. The designation of inflatable PFDs for recreational boats as ''associated equipment'' complements the ''Recreational Inflatable Personal Flotation Device Standards'' final rule published elsewhere in today's Federal Register, which allows for approval of these devices with a minimum of restrictions or conditions. Consequently, 33 CFR 179.03, paragraph (d) under ''Associated equipment'' is retained as proposed in the NPRM. Because this provision is intended only to manage the risk involved in the introduction of a new product to a generally inexperienced market, the Coast Guard will re-evaluate it five years from the effective date of these regulations and remove it if it determines it is no longer necessary. As was discussed in the NPRM, these regulations (like all regulations affecting recreational boats) are reviewed periodically at public meetings of the National Boating Safety Advisory Council (NBSAC).

The NPRM proposed that as a means of developing and maintaining a list of first purchasers, PFD manufacturers be required to provide a postage-paid product registration card with each inflatable PFD, and to retain the returned cards on file for five years. Two comments from PFD manufacturers opposed the requirement, in proposed new Subpart H of 33 CFR Part 181, for PFD manufacturers to provide a postage-paid registration card with each inflatable PFD sold. The comments cited the burden and expense associated with the provision of such cards.

In response to the comments, the Coast Guard has decided not to include the proposed 33 CFR Part 181, Subpart H in this final rule. With the designation of inflatable PFDs as ''Associated equipment'' in the new 33 CFR 179.05, PFD manufacturers will be expected to ''exercise reasonable diligence in establishing and maintaining a list of

(first) purchasers and their current addresses.'' The Coast Guard acknowledges that there are other suitable means of accomplishing this end than by a mandated postage-paid card to be filled in by the first retail purchaser. PFD manufacturers may arrange for assistance of dealers and distributors in obtaining information concerning first purchasers, or provide for toll-free telephone or on-line registration by first purchasers. The removal of the postage-paid postcard requirement gives manufacturers flexibility to adopt the means best suited to their individual situations.

There are no comments on any of the other proposals in the NPRM. Those proposals were discussed in detail in the preamble to the NPRM, and are being adopted in this final rule with only minor editorial refinements and corrections, such as updating of Coast Guard staff symbols to reflect a recent Coast Guard reorganization.

The only substantive addition not specifically proposed in the NPRM is to redesignated 46 CFR 159.010–19, which specifies procedures for termination of acceptance or recognition of laboratories. Since termination of acceptance or recognition of a laboratory by the Commandant constitutes a final agency action, procedural measures have been added to ensure that such action cannot be taken by the Commandant without due process.

Incorporation by Reference

The Director of the Federal Register has approved the material in 33 CFR 181.4 and 46 CFR 159.001–4 for incorporation by reference under 5 U.S.C. 552 and 1 CFR part 51. The material is available as indicated in those sections.

Regulatory Evaluation

This rulemaking is not a significant regulatory action under section 3(f) of Executive Order 12866 and does not require an assessment of potential costs and benefits under section 6(a)(3) of that order. It has not been reviewed by the Office of Management and Budget under that order. It is not significant under the regulatory policies and procedures of the Department of Transportation (DOT) (44 FR 11040; February 26, 1979).

The Coast Guard expects the economic impact of this rulemaking to be so minimal that a full Regulatory Evaluation under paragraph 10e of the regulatory policies and procedures of DOT is unnecessary. These rules are generally procedural, enabling boaters to purchase and use inflatable PFDs on their boats if they wish to do so. The only rule that will require affected parties to do something they are not already doing is the designation of inflatable PFDs as ''associated equipment'', which will require that manufacturers ''exercise due diligence in establishing and maintaining a list of (first) purchasers and their current addresses.'' Compliance with this requirement can be as simple as maintenance of returned postage-prepaid registration cards, as was proposed in the NPRM. Since that specific requirement is not included in this final rule, manufacturers will have flexibility to comply with the statutory requirement in the least burdensome manner for their particular circumstances. The total cost for this requirement, including overhead, is expected to be no more than 50¢ per device, resulting in a total cost to the industry of only $25,000 annually if 50,000 units per year are produced.

Small Entities

Under the Regulatory Flexibility Act (5 U.S.C. 601 *et seq.*), the Coast Guard must consider whether this rulemaking will have a significant economic impact on a substantial number of small entities. ''Small entities'' may include (1) small businesses and not-for-profit organizations that are independently owned and operated and are not dominant in their fields and (2) governmental jurisdictions with populations of less than 50,000.

These rules are generally procedural, enabling boaters to purchase and use inflatable PFDs on their boats if they wish to do so. As discussed above, the economic impact of the new requirements is expected to be minimal, and no comments were received concerning the impact of this rulemaking on small entities. Therefore, the Coast Guard certifies under section 605(b) of the Regulatory Flexibility Act (5 U.S.C. 601 *et seq.*) that this rule will not have a significant economic impact on a substantial number of small entities.

Collection of Information

This rule contains collection-of-information requirements. The Coast Guard has submitted the requirements to the Office of Management and Budget (OMB) for review under section 3504(h) of the Paperwork Reduction Act (44 U.S.C. 3501 *et seq.*). The Coast Guard will publish a notice in the Federal Register when they have been approved. The section number is 46 CFR 159.010–7.

Federalism

The Coast Guard has analyzed this rulemaking under the principles and criteria contained in Executive Order 12612 and has determined that it does not have sufficient federalism implications to warrant the preparation of a Federalism Assessment. This rulemaking establishes and revises procedures for Coast Guard approval of inflatable and other PFDs. The authority to establish these requirements is committed to the Coast Guard by Federal statutes. Furthermore, since PFDs are manufactured and used in the national marketplace, safety standards for PFDs should be national in scope to avoid burdensome variances. Therefore, this rule preempts State action on the same subject matter.

Environment

The Coast Guard considered the environmental impact of this rulemaking and concluded that, under paragraph 2.B.2 of Commandant Instruction M16475.1B, this rulemaking is categorically excluded from further environmental documentation. This rulemaking is procedural in nature, and contains nothing that would affect the environment.

List of Subjects

33 CFR Part 175

Marine safety.

33 CFR Part 179

Marine safety, Reporting and recordkeeping requirements.

33 CFR Part 181

Incorporation by Reference, Labeling, Marine safety, Reporting and recordkeeping requirements.

46 CFR Part 2

Marine safety, Reporting and recordkeeping requirements, vessels.

46 CFR Part 159

Business and industry, Incorporation by Reference, Laboratories, Marine safety, Reporting and recordkeeping requirements.

46 CFR Part 160

Marine safety, Reporting and recordkeeping requirements.

For the reasons set out in the preamble, the Coast Guard amends 33 CFR parts 175, 179 and 181; and 46 CFR parts 2, 159, and 160 as follows:

Title 33—[Amended]

PART 175—EQUIPMENT REQUIREMENTS

1. The authority citation for part 175 continues to read as follows:

Authority: 46 U.S.C. 4302; 49 CFR 1.46.

2. In § 175.21, paragraph (a) is revised to read as follows:

§ 175.21 Condition; size and fit; approval marking.

* * * * *

(a) In serviceable condition as provided in § 175.23;

* * * * *

3. Section 175.23 is added to read as follows:

§ 175.23 Serviceable condition.

A PFD is considered to be in serviceable condition for purposes of § 175.21(a) only if the following conditions are met:

(a) No PFD may exhibit deterioration that could diminish the performance of the PFD, including—

(1) Metal or plastic hardware used to secure the PFD on the wearer that is broken, deformed, or weakened by corrosion;

(2) Webbings or straps used to secure the PFD on the wearer that are ripped, torn, or which have become separated from an attachment point on the PFD; or

(3) Any other rotted or deteriorated structural component that fails when tugged.

(b) In addition to meeting the requirements of paragraph (a) of this section, no inherently buoyant PFD, including the inherently buoyant components of a hybrid inflatable PFD, may exhibit—

(1) Rips, tears, or open seams in fabric or coatings, that are large enough to allow the loss of buoyant material;

(2) Buoyant material that has become hardened, non-resilient, permanently compressed, waterlogged, oil-soaked, or which shows evidence of fungus or mildew; or

(3) Loss of buoyant material or buoyant material that is not securely held in position.

(c) In addition to meeting the requirements of paragraph (a) of this section, an inflatable PFD, including the inflatable components of a hybrid inflatable PFD, must be equipped with—

(1) Except as provided in paragraph (d) of this section, a properly armed inflation mechanism, complete with a full inflation medium cartridge and all status indicators showing that the inflation mechanism is properly armed;

(2) Inflatable chambers that are all capable of holding air;

(3) Oral inflation tubes that are not blocked, detached, or broken;

(4) A manual inflation lanyard or lever that is not inaccessible, broken, or missing; and

(5) Inflator status indicators that are not broken or otherwise non-functional.

(d) The inflation system of an inflatable PFD need not be armed when the PFD is worn inflated and otherwise meets the requirements of paragraphs (a) and (c) of this section.

PART 179—DEFECT NOTIFICATION

4. The authority citation for Part 179 is revised to read as follows:

Authority: 43 U.S.C. 1333; 46 U.S.C. 4302, 4307, 4310, and 4311; 49 CFR 1.46.

5. Section 179.01 is revised to read as follows:

§ 179.01 Purpose.

This part prescribes rules to implement 46 U.S.C. 4310, governing the notification of defects in boats and associated equipment.

6. Section 179.03 is revised to read as follows:

§ 179.03 Definitions.

Associated equipment means the following equipment as shipped, transferred, or sold from the place of manufacture and includes all attached parts and accessories:

(1) An inboard engine.

(2) An outboard engine.

(3) A stern drive unit.

(4) An inflatable personal flotation device approved under 46 CFR 160.076.

Boat means any vessel—

(1) Manufactured or used primarily for noncommercial use;

(2) Leased, rented, or chartered to another for the latter's noncommercial use; or

(3) Engaged in the carrying of six or fewer passengers.

Manufacturer means any person engaged in—

(1) The manufacture, construction, or assembly of boats or associated equipment;

(2) The manufacture or construction of components for boats and associated equipment to be sold for subsequent assembly; or

(3) The importation into the United States for sale of boats, associated equipment, or components thereof.

7. Section 179.05 is revised to read as follows:

§ 179.05 Manufacturer discovered defects.

Each manufacturer who is required to furnish a notice of a defect or failure to comply with a standard or regulation under 46 U.S.C. 4310(b), shall furnish that notice within 30 days after the manufacturer discovers or acquires information of the defect or failure to comply.

8. Section 179.07 is revised to read as follows:

§ 179.07 Notice given by "more expeditious means".

Each manufacturer who gives notice by more expeditious means as provided for in 46 U.S.C. 4310(c)(1)(C), must give such notice in writing.

9. In § 179.09 the introductory paragraph is revised to read as follows:

§ 179.09 Contents of notification.

Each notice required under 46 U.S.C. 4310(b) must include the following additional information:

* * * * *

10. Section 179.11 is revised to read as follows:

§ 179.11 Defects determined by the Commandant.

A manufacturer who is informed by the Commandant under 46 U.S.C. 4310(f) that a boat or associated equipment contains a defect relating to safety or failure to comply with a standard or regulation issued under the authority of 46 U.S.C. 4302, shall within 30 days of receipt of the information—

(a) Furnish the notification described in 46 U.S.C. 4310(d) to the persons designated in 46 U.S.C. 4310(c), or

(b) Provide information to the Commandant by certified mail stating why the manufacturer believes there is no defect relating to safety or failure of compliance.

10a. In § 179.13, paragraphs (a) introductory text, (a)(1), and (a)(2) are revised to read as follows:

§ 179.13 Initial report to the Commandant.

(a) When a manufacturer gives a notification required under 46 U.S.C. 4310, the manufacturer shall concurrently send to the Commandant by certified mail—

(1) A true or representative copy of each notice, bulletin, and other communication given to persons required to be notified under 46 U.S.C. 4310(c);

(2) The manufacturer's best estimate of the total number of boats or items of associated equipment potentially affected by the defect or failure to comply with a standard or regulation prescribed under 46 U.S.C. 4302; and

* * * * *

11. Section 179.17 is revised to read as follows:

§ 179.17 Penalties.

Each manufacturer who fails to comply with a provision of 46 U.S.C. 4310 or the regulations in this part, is subject to the penalties as prescribed in 46 U.S.C. 4311.

12. Section 179.19 is revised to read as follows:

§ 179.19 Address of the Commandant.

(a) Each report and communication sent to the Coast Guard and required by this part concerning boats and associated equipment other than inflatable personal flotation devices, must be submitted to Commandant (G–OPB–3), U.S. Coast Guard, 2100 Second St., SW., Washington, DC 20593–0001.

(b) Each report and communication sent to the Coast Guard and required by this part concerning inflatable personal flotation devices, must be submitted to Commandant (G–MMS–4), U.S. Coast Guard, 2100 Second St. SW., Washington, DC 20593–0001.

PART 181—MANUFACTURER REQUIREMENTS

13. The authority citation for part 181 is revised to read as follows:

Authority: 46 U.S.C. 4302 and 4310; 49 CFR 1.46.

Subpart A—General

14. In § 181.4, paragraph (b) is revised to read as follows:

§ 181.4 Incorporation by reference.

* * * * *

(b) The materials approved for incorporation by reference in this part, and the sections affected are:

Underwriters Laboratories, Inc.

333 Pfingsten Road, Northbrook, IL 60062.

UL 1123, Marine Buoyant Devices, 181.703.

February 17, 1995.

Subpart G—Instruction Pamphlet For Personal Flotation Devices

15. Section 181.702 is revised to read as follows:

§ 181.702 Information pamphlet: requirement to furnish.

(a) Each manufacturer of a Type I, II, III, IV, or V personal flotation device (PFD) must furnish with each PFD that is sold or offered for sale for use on a recreational boat, an information pamphlet meeting the requirements of § 181.703, § 181.704, or § 181.705 of this subpart, as appropriate.

(b) No person may sell or offer for sale for use on a recreational boat, a Type I, II, III, IV, or V PFD unless an information pamphlet required by this section is attached in such a way that it can be read prior to purchase.

16. Section 181.703 is revised to read as follows:

§ 181.703 Information pamphlet: Contents.

Unless otherwise specified in this subpart, each information pamphlet must contain the information specified in sections 33, 34 and 35 of UL 1123.

17. Section 181.704 is added to read as follows:

§ 181.704 contents of information pamphlet: Recreational hybrid PFD.

Each information pamphlet for a recreational hybrid PFD approved under 46 CFR 160.077 must contain the information specified in 46 CFR 160.077–27.

18. Section 181.705 is added to read as follows:

§ 181.705 Contents of information pamphlet: Recreational inflatable PFD.

Each information pamphlet for a recreational inflatable PFD approved under 46 CFR 160.076 must contain the information required by 46 CFR 160.076–35.

Title 46—[Amended]

PART 2—VESSEL INSPECTIONS

19. The authority citation for part 2 is revised to read as follows:

Authority: 33 U.S.C. 1903; 43 U.S.C. 1333; 46 U.S.C. 3306, 3703; E.O. 12334, 3 CFR, 1980 Comp., p. 277; 49 CFR 1.46; subpart 2.45 also issued under the authority of Act Dec. 27, 1950, Ch. 1155, secs. 1, 2, 64 Stat. 1120 (see 46 U.S.C. App. note prec. 1).

20. In § 2.75–1, paragraph (f) is revised to read as follows:

§ 2.75–1 Approvals.

* * * * *

(f) A listing of current and formerly approved equipment and materials is published by the Coast Guard from time to time in ''Equipment Lists'' (COMDTINST M16714.3 series), which is available for sale from the Superintendent of Documents, Government Printing Office.

§ 2.75–17 [Removed]

21. Section 2.75–17 is removed.

§ 2.75–18 [Removed]

22. Section 2.75–18 is removed.

§ 2.75–19 [Removed]

23. Section 2.75–19 is removed.

§ 2.75–20 [Removed]

24. Section 2.75–20 is removed.

§ 2.75–30 [Removed]

25. Section 2.75–30 is removed.

26. In § 2.75–50, the section heading and paragraph (a) are revised and a new paragraph (c) is added to read as follows:

§ 2.75–50 Withdrawals or terminations of approvals and appeals.

(a) The Commandant may withdraw approval for any item which is found not to be in compliance with the conditions of approval, found to be unsuitable for its intended purpose, or does not meet the requirements of applicable regulations.

* * * * *

(c) Any person directly affected by a decision to deny, withdraw, or terminate an approval may appeal the decision to the Director of Marine Safety and Environmental Protection (Commandant (G–M)) as provided in § 1.03–15 of this chapter.

PART 159—APPROVAL OF EQUIPMENT AND MATERIALS

27. The authority citation for part 159 is revised to read as follows:

Authority: 46 U.S.C. 3306, 3703; 49 CFR 1.45, 1.46; Section 159.001–9 also issued under the authority of 44 U.S.C. 3507.

28. Section 159.001–2 is revised to read as follows:

§ 159.001–2 Right of appeal.

Any person directly affected by a decision or action taken under this subchapter, by or on behalf of the Coast Guard, may appeal to the Director of Marine Safety and Environmental Protection (Commandant (G–M)) as provided in § 1.03–15 of this chapter.

29. Section 159.001–3 is revised to read as follows:

§ 159.001–3 Definitions.

As used in this part:

Classification society means an organization involved in the inspection of ships and ship equipment, and which, as determined by the Commandant, meets the standards in IMO Resolution A.739(18).

Independent laboratory means an organization which meets the standards for acceptance in § 159.010–3 of this part, and which is accepted by the Coast Guard for performing certain tests and inspections. In addition to commercial testing laboratories, the Commandant may also accept classification societies and agencies of governments that are involved in the inspection and testing of marine safety equipment that meet the requirements of § 159.010–3.

Memorandum of Understanding (MOU) is an agreement between the Coast Guard and a laboratory that specifies the approval functions a recognized independent laboratory performs for the Coast Guard and the recognized independent laboratory's working arrangements with the Coast Guard.

Recognized independent laboratory means an independent laboratory which meets the standards of § 159.010–3, and is accepted by the Coast Guard to

perform certain equipment approval functions on behalf of the Coast Guard, as described in a Memorandum of Understanding signed by the laboratory and the Coast Guard in accordance with § 159.010–7(b).

30. Section 159.001–4 is added to read as follows:

§ 159.001–4 Incorporation by reference.

(a) Certain materials is incorporated by reference into this part with the approval of the Director of the Federal Register under 5 U.S.C. 552(a) and 1 CFR part 51. To enforce any edition other than that specified in paragraph (b) of this section, the Coast Guard must publish notice of change in the Federal Register; and the material must be available to the public. All approved material is available for inspection at the Office of the Federal Register, 800 North Capitol Street NW, suite 700, Washington, DC, and at the U.S. Coast Guard, Lifesaving and Fire Safety Standards Branch (G–MMS–4), 2100 Second Street SW, Washington, DC 20593–0001, and is available from the sources indicated in paragraph (b) of this section.

(b) The material approved for incorporation by reference in this part (subchapter) and the sections affected are as follows:

International Maritime Organization (IMO)

Publications Section, 4 Albert Embankment, London SE1 7SR, England.

Resolution A.739(18), Guidelines for the Authorization of Organizations Acting on Behalf of the Administration, November 22, 1993—159.001–3.

31. Section 159.001–5 is revised to read as follows:

§ 159.001–5 Correspondence and applications.

Unless otherwise specified, all correspondence and applications in connection with approval and testing of equipment and materials must be addressed to: Commandant (G–MMS–4), U.S. Coast Guard, 2100 Second Street SW, Washington, DC 20593–0001, Telephone: (202) 267–1444, Facsimile: (202) 267–1069, Electronic mail: MVI–3/G–M@cgsmtp.uscg.mil.

Subpart 159.005—Approval Procedures

32. In § 159.005–13, paragraph (a)(4) is revised to read as follows:

§ 159.005–13 Equipment or material: approval.

(a) * * *

(4) Publishes a record of the approval in ''Equipment Lists.'' The most recent edition of ''Equipment Lists'' U.S. Coast Guard Publication M16714.3 (series) is available from the Superintendent of Documents, U.S. Government Printing Office, P.O. Box 371954, Pittsburgh, PA 15250–7954.

* * * * *

33. The title of subpart 159.010 is revised to read as follows:

Subpart 159.010—Independent Laboratory: Acceptance, Recognition, and Termination

34. Section 159.010–1 is revised to read as follows:

§ 159.010–1 Purpose.

This subpart contains the following:

(a) The standards and procedures under which the Coast Guard accepts an independent laboratory that a manufacturer proposes to use.

(b) The standards and procedures under which a laboratory is accepted as a recognized laboratory under applicable subparts.

(c) The circumstances under which the acceptance or recognition of a laboratory is terminated.

35. Section 159.010–5 is revised to read as follows:

§ 159.010–5 Independent laboratory: application for acceptance.

(a) Each application for acceptance of an organization as an independent laboratory must contain the following:

(1) The name and address of the organization.

(2) A list of the equipment or material that the organization would inspect, or test, or both, under this subchapter.

(3) A description of the organization's experience and its qualifications for conducting the inspections and tests required in the applicable subpart.

(4) A description of the apparatus and facilities available to the organization for conducting those inspections and tests.

(5) If instruments are used in the required tests and inspections, a description of the instrument calibration program applying to those instruments.

(6) The position titles of personnel who are to perform, supervise, or witness those inspections or tests, along with the training and experience required for personnel in those positions.

(7) A statement signed by the chief officer of the organization or the chief officer's representative, that an official representative of the Coast Guard is allowed access upon request to the place where tests and inspections take place, to verify the information submitted in the application, or to witness tests and inspections.

(b) Each application for acceptance as an independent laboratory that is not submitted by an agency of a state or another national government, or by a classification society, must also contain the following:

(1) The name and address of each subsidiary and division of the organization, or a statement that none are involved in the testing or manufacturing of equipment approved under this subchapter.

(3) The name, title, address, and principal business activity of each of the organization's officers and directors, and the name, address, and principal business activity of each person, company, or corporation that owns at least three-percent interest in the organization or in a company or corporation that controls the organization.

§ 159.010–7 [Removed]

36. Section 159.010–7 is removed.

§ 159.010–9 [Redesignated as § 159.010–7]

37. Section 159.010–9 is redesignated 159.010–7, and revised to read as follows:

§ 159.010–7 Recognized independent laboratory: Memorandum of Understanding.

(a) Only laboratories that have entered into an MOU with the Coast Guard may perform the functions of a recognized laboratory under this chapter.

(b) An independent laboratory seeking to become a recognized independent laboratory must submit a signed MOU to the Commandant that includes—

(1) A statement of purpose;

(2) An identification and description of the parties involved;

(3) A description of the problem resolution and appeals processes;

(4) A description of the process for measuring effectiveness and efficiency of the program under the MOU;

(5) The effective date of the MOU and terms for its termination;

(6) A statement to the effect that the MOU is not an exclusive agreement between the recognized independent laboratory and the Coast Guard;

(7) An agreement to conduct comparison testing with other recognized laboratories as directed by the Coast Guard, no more often than twice each year, with the laboratory bearing the cost of sample acquisition and testing;

(8) A statement as to how the costs of implementing the MOU will be borne; and

(9) A description of each party's responsibilities for—

(i) Equipment review and approval;

(ii) Coast Guard oversight of the recognized independent laboratory's procedures and processes;

(iii) Coordination between the parties;

(iv) Developing and maintaining regulations and standards;

(v) Handling review and approval of new and novel items not anticipated by existing regulations and standards;

(vi) Testing and inspection facilities and procedures;

(vii) Production quality control; and

(vii) Maintenance of records.

(c) The signature on the MOU required by paragraph (b) of this section must be that of the chief officer of the independent laboratory or the chief officer's representative. The Commandant or an authorized representative of the Commandant will review the MOU to ensure that it contains the information required by paragraph (b) of this section, and that the substantive provisions submitted in compliance with that paragraph are equivalent to those contained in other MOUs signed by the Commandant. If the Commandant determines that the MOU is acceptable and the independent laboratory is capable of carrying out the equipment approval functions identified in the MOU in accordance with all appropriate requirements, the Commandant or authorized representative may at his discretion sign the MOU. Where qualitative tests or determinations are required for approval or follow-up, provision must be made for conducting comparison tests with other recognized laboratories.

(d) Copies of MOUs signed by the Commandant in accordance with this part and of lists of independent laboratories which have been accepted as recognized laboratories but which have not yet been added to the lists included in this subchapter may be obtained at the address listed in § 159.001–5.

§ 159.010–11 [Removed]

38. Section 159.010–11 is removed.

§ 159.010–17 [Redesignated as § 159.010–11]

39. Section 159.010–17 is redesignated 159.010–11, and revised to read as follows:

§ 159.010–11 Changes in the laboratory's qualifications.

(a) If any of the information submitted under § 159.010–5(a) changes, the laboratory shall notify the Commandant in writing of each change within 30 days after the change has occurred.

(b) If any change in the independent laboratory occurs which affects its performance under the MOU required under § 159.010–7, the laboratory shall notify the Commandant in writing within 30 days after the change occurs. The Commandant may terminate the MOU, or may require amendments or revisions.

§ 159.010–19 [Redesignated § 159.010–17]

40. Section 159.010–19 is redesignated 159.010–17, and revised to read as follows:

§ 159.010–17 Termination of acceptance or recognition of an independent laboratory.

The acceptance or recognition of a laboratory terminates if the laboratory—

(a) Requests termination;

(b) Is no longer in business;

(c) Knowingly fails to perform or supervise an inspection or test, or both, as required in an applicable subpart;

(d) Knowingly attests to the lack of errors, omissions, or false statement of an approval test report that contains errors omissions, or false statements;

(e) Does not meet the requirements of § 159.010–3(a);

(f) Does not comply with § 159.010–11;

(g) Contracts or transfers the performance or supervision of required inspections or tests to another laboratory or person without the approval of the Commandant; or

(h) Fails to, or in the opinion of the Commandant is unable to, carry out its responsibilities under an MOU required by § 159.010–7.

§ 159.010–21 [Redesignated as § 159.010–19]

41. Section 159.010–21 is redesignated 159.010–19, and revised to read as follows:

§ 159.010–19 Termination of acceptance or recognition: Procedure.

(a) If the Coast Guard receives evidence of grounds for termination of acceptance or recognition of an independent laboratory under § 159.010–17, the Commandant will notify the laboratory that termination is under consideration. The laboratory may submit written comments to the Commandant within 21 days of receipt of the notification. The Commandant will take all timely written comments into account before taking final action in the matter, and in no case will the Commandant take final action until at least 30 days after the laboratory has received the notification. Any final action taken by the Commandant is final agency action on the matter.

(b) If a deficiency could materially affect the validity of an approval issued under an applicable subpart, the Commandant may temporarily suspend the acceptance of the laboratory and may direct the holder of the certificate of approval to cease claiming that the items tested or inspected by the laboratory are Coast Guard approved, pending a final decision in the matter.

PART 160—LIFESAVING EQUIPMENT

42. The authority citation for Part 160 continues to read as follows:

Authority: 46 U.S.C. 2103, 3306, 3703, and 4302; E.O. 12234, 3 CFR, 1980 Comp., p. 277; 49 CFR 1.46.

Subpart 160.021—Hand Red Flare Distress Signals

§ 160.021–9 [Removed]

44. Section 160.021–9 is removed.

Subpart 160.022—Floating Orange Smoke Distress Signals (5 Minutes)

§ 160.022–9 [Removed]

43. Section 160.022–9 is removed.

Subpart 160.023—Hand Combination Flare and Smoke Distress Signals

§ 160.023–9 [Removed]

44. Section 160.023–9 is removed.

Subpart 160.024—Pistol-Projected Parachute Red Flare Distress Signals

§ 160.024–9 [Removed]

45. Section 160.024–9 is removed.

Subpart 160.028—Signal Pistols For Red Flare Distress Signals

§ 160.028–9 [Removed]

46. Section 160.028–9 is removed.

Subpart 160.031—Line-Throwing Appliance, Shoulder Gun Type (And Equipment)

§ 160.031–9 [Removed]

47. Section 160.031–9 is removed.

Subpart 160.036—Hand-Held Rocket-Propelled Parachute Red Flare Distress Signals

§ 160.036–9 [Removed]

48. Section 160.036–9 is removed.

Subpart 160.037—Hand Orange Smoke Distress Signals

§ 160.037–9 [Removed]

49. Section 160.037–9 is removed.

Subpart 160.040—Line-Throwing Appliance, Impulse-Projected Rocket Type (And Equipment)

§ 160.040–9 [Removed]

50. Section 160.040–9 is removed.

Subpart 160.047—Specifications for a Buoyant Vest, Kapok, or Fibrous Glass, Adult and Child

§ 160.047–6a [Removed]

51. Section 160.047–6a is removed.

§ 160.047–6b [Removed]

52. Section 160.047–6b is removed.

§ 160.047–6c [Removed]

53. Section 160.047–6c is removed.

54. Section 160.047—7 is revised to read as follows:

§ 160.047–7 Recognized Laboratory

(a) A manufacturer seeking Coast Guard approval of a product under this subpart shall follow the approval procedures of subpart 159.005 of this chapter, and shall apply for approval directly to a recognized independent laboratory. The following laboratories are recognized under § 159.010–7 of this part, to perform testing and approval functions under this subpart:

Underwriters Laboratories, 12 Laboratory Drive, P.O. Box 13995, Research Triangle Park, NC 27709–3995, (919) 549–1400.

(b) Production oversight must be performed by the same laboratory that performs the approval tests unless, as determined by the Commandant, the employees of the laboratory performing production oversight receive training and support equal to that of the laboratory that performed the approval testing.

§ 160.047–9 [Removed]

55. Section 160.047–9 is removed.

§ 160.047–10 [Removed]

56. Section 160.047—10 is removed.

Subpart 160.048—Specification for a Buoyant Cushion, Fibrous Glass

§ 160.048–7 [Amended]

57. Section 160.048–7, removed paragraphs (a) and (b) and redesignate paragraphs (b), (c), and (e) as (a), (b), and (c) respectively.

§ 160.048–7a [Removed]

58. Section 160.048–7a is removed.

59. Section 160.048–8 is revised to read as follows:

§ 160.048–8 Recognized Laboratory.

(a) A manufacturer seeking Coast Guard approval of a product under this subpart shall follow the approval procedures of subpart 159.005 of this chapter, and shall apply for approval directly to a recognized independent laboratory. The following laboratories are recognized under § 159.010–7 of this part, to perform testing and approval functions under this subpart:

Underwriters Laboratories, 12 Laboratory Drive, P.O. Box 13995, Research Triangle Park, NC 27709–3995, (919) 549–1400.

(b) Production oversight must be performed by the same laboratory that performs the approval tests unless, as determined by the Commandant, the employees of the laboratory performed production oversight receive training and support equal to that of the laboratory that performed the approval testing.

§ 160.048–9 [Removed]

60. Section 160.048–9 is removed.

§ 160.048–10 [Removed]

61. Section 160.048–10 is removed.

Subpart 160.049—Specification for a Buoyant Cushion, Plastic Foam

62. In § 160.049–7, revise the heading, remove paragraphs (a) and (d) and redesignate paragraphs (b), (c), and (e) as (a), (b), and (c) respectively, to read as follows:

§ 160.049–7 Procedure for approval

§ 160.049–7a [Removed]

63. Section 160.049–7a is removed.

63. Section 160.049–8 is revised to read a follows:

§ 160.049–8 Recognized laboratory.

(a) A manufacturer seeking Coast Guard approval of a product under this subpart shall follow the approval procedures of subpart 159.005 of this chapter, and shall apply for approval directly to a recognized independent laboratory. The following laboratories are recognized under § 159.010–7 of this part, to perform testing and approval functions under this subpart:

Underwriters Laboratories, 12 Laboratory Drive, P.O. Box 13995, Research Triangle Park, NC 27709–3995, (919) 549–1400.

(b) Production oversight must be performed by the same laboratory that performs the approval tests unless, as determined by the Commandant, the employees of the laboratory performing production oversight receive training and support equal to that of the laboratory that performed the approval testing.

§ 160.049–9 [Removed]

65. Section 160.049–9 is removed.

§ 160.049–10 [Removed]

66. Section 160.049–10 is removed.

Subpart 160.052—Specification For a Buoyant Vest, Unicellular Plastic Foam, Adult and Child

§ 160.052–8a [Removed]

67. Section 160.052–8a is removed.

§ 160.052–8b [Removed]

68. Section 160.052–8b is removed.

§ 160.052–8c [Removed]

69. Section 160.052–8c is removed.

70. Section 160.052–9 is revised to read as follows:

§ 160.052–9 Recognized Laboratory.

(a) A manufacturer seeking Coast Guard approval of a product under this subpart shall follow the approval procedures of subpart 159.005 of this chapter, and shall apply for approval directly to a recognized independent laboratory. The following laboratories are recognized under § 159.010–7 of this part, to perform testing and approval functions under this subpart:

Underwriters Laboratories, 12 Laboratory Drive, P.O. Box 13995, Research Triangle Park, NC 27709–3995, (919) 549–1400.

(b) Production oversight must be performed by the same laboratory that performs the approval tests unless, as determined by the Commandant, the employees of the laboratory performing production oversight receive training and support equal to that of the laboratory that performed the approval testing.

§ 160.052–11 [Removed]

71. Section 160.052–11 is removed.

§ 160.052–12 [Removed]

72. Section 160.052–12 is removed.

Subpart 160.057—Floating Orange Smoke Distress Signals (15 Minutes)

§ 160.057–9 [Removed]

73. Section 160.057–9 is removed.

Subpart 160.060—Specification For a Buoyant Vest, Unicellular Polyethylene Foam, Adult and Child

§ 160.060–8a [Removed]

74. Section 160.060–8a is removed.

§ 160.060–8b [Removed]

77. Section 160.060–8b is removed.

§ 160.060–8c [Removed]

75. Section 160.060–8c is removed.

76. Section 160.060–9 is revised to read as follows:

§ 160.060–9 Recognized Laboratory.

(a) A manufacturer seeking Coast Guard approval of a product under this subpart shall follow the approval

procedures of subpart 159.005 of this chapter, and shall apply for approval directly to a recognized independent laboratory. The following laboratories are recognized under § 159.010–7 of this part, to perform testing and approval functions under this subpart:

Underwriters Laboratories, 12 Laboratory Drive, P.O. Box 13995, Research Triangle Park, NC 27709–3995, (919) 549–1400.

(b) Production oversight must be performed by the same laboratory that performs the approval tests unless, as determined by the Commandant, the employees of the laboratory performing production oversight receive training and support equal to that of the laboratory that performed the approval testing.

§ 160.060–11 [Removed]

77. Section 160.060–11 is removed.

§ 160.060–12 [Removed]

78. Section 160.060–12 is removed.

Subpart 160.064—Marine Buoyant Devices

§ 160.064–5 [Removed]

79. Section 160.064–5 is removed.

§ 160.064–5a [Removed]

80. Section 160.064–5a is removed.

§ 160.064–5b [Removed]

81. Section 160.064–5b is removed.

82. Section 160.064–7 is revised to read as follows:

§ 160.064–7 Recognized Laboratory.

(a) A manufacturer seeking Coast Guard approval of a product under this subpart shall follow the approval procedures of subpart 159.005 of this chapter, and shall apply for approval directly to a recognized independent laboratory. The following laboratories are recognized under § 159.010–7 of this part, to perform testing and approval functions under this subpart:

Underwriters Laboratories, 12 Laboratory Drive, P.O. Box 13995, Research Triangle Park, NC 27709–3995, (919) 549–1400.

(b) Production oversight must be performed by the same laboratory that performs the approval tests unless, as determined by the Commandant, the employees of the laboratory performing production oversight receive training and support equal to that of the laboratory that performed the approval testing.

§ 160.064–8 [Removed]

83. Section 160.064–8 is removed.

§ 160.064–9 [Removed]

84. Section 160.064–9 is removed.

Subpart 160.066—Distress Signal for Boats, Red Aerial Pyrotechnic Flare

85. In § 160.066–11, paragraph (c) is revised to read as follows:

§ 160.066–11 Approval procedures.

* * * * *

(c) The approval tests must be performed by an independent laboratory accepted by the Commandant under Subpart 159.010 of this chapter.

§ 160.066–18 [Removed]

86. Section 160.066–18 is removed.

Subpart 160.077—Hybrid Inflatable Personal Flotation Devices

87. Section 160.077–9 is revised to read as follows:

§ 160.077–9 Recognized Laboratory.

(a) A manufacturer seeking Coast Guard approval of a product under this subpart shall follow the approval procedures of subpart 159.055 of this chapter, and shall apply for approval directly to a recognized independent laboratory. The following laboratories are recognized under § 159.010–7 of this part, to perform testing and approval functions under this subpart:

Underwriters Laboratories, 12 Laboratory Drive, P.O. Box 13995, Research Triangle Park, NC 27709–3995, (919) 549–1400.

(b) Production oversight must be performed by the same laboratory that performs the approval tests unless, as determined by the Commandant, the employees of the laboratory performing production oversight receive training and support equal to that of the laboratory that performed the approval testing.

Dated: March 20, 1996.

J.C. Card,

Rear Admiral, U.S. Coast Guard Chief, Office of Marine Safety, Security and Environmental Protection.

[FR Doc. 96–7302 Filed 3–27–96; 8:45 am]

BILLING CODE 4910–14–M

---

46 CFR Part 160

[CGD 94–110]

RIN 2115–AE96

Recreational Inflatable Personal Flotation Device Standards

AGENCY: Coast Guard, DOT.

ACTION: Final rule.

SUMMARY: The Coast Guard is adopting a final rule that establishes structural and performance standards for inflatable personal flotation devices (PFDs) for recreational boaters, as well as the procedures for Coast Guard approval of inflatable PFDs. These standards allow for approval of inflatable PFDs which are more amendable to continuous wear by recreational boaters than inherently buoyant PFDs, thereby encouraging use of PFDs by the boating public and saving lives.

DATES: This rule is effective on September 24, 1996.

ADDRESSES: Unless otherwise indicated, documents referred to in this preamble are available for inspection or copying at the office of the Executive Secretary, Marine Safety Council (G–LRA/3406), U.S. Coast Guard Headquarters, 2100 Second Street SW., room 3406, Washington, DC 20593–0001, between 8 a.m. and 3 p.m., Monday through Friday, except Federal holidays.

FOR FURTHER INFORMATION CONTACT:

Mr. Robert L. Markle, U.S. Coast Guard, Marine Safety and Environmental Protection Directorate, telephone (202) 267–6446, facsimile (202) 267–1069, or electronic mail ''mvi–3/G-M18@cgsmtp.uscg.mil''. A copy of this final rule may be obtained by calling the Coast Guard's toll-free Customer Infoline, 1–800–368–5647. In Washington, DC, call (202) 267–0780.

SUPPLEMENTARY INFORMATION:

Regulatory History

On November 9, 1993, the Coast Guard published an Advance Notice of Proposed Rulemaking (ANPRM) entitled ''Inflatable Personal Flotation Devices'' in the Federal Register (58 FR 59428). On June 23, 1995, the Coast Guard published an interim rule (IR) entitled ''Inflatable Personal Flotation Device Standards'' in the Federal Register (60 FR 32836). This IR became effective on July 24, 1995. Due to requests, a public meeting, announced in the August 2, 1995, Federal Register (60 FR 39268), was held at Coast Guard Headquarters on August 28, 1995. On October 10, 1995, the Coast guard published a notice in the Federal Register (60 FR 52631, October 10, 1995) extending the comment period on the IR from October 23, 1995, to November 6, 1995, to allow discussion of the rule at the National Boating Safety Advisory Council (NBSAC) meeting on October 30–31, 1995. Additionally, minor editorial changes reflecting Coast Guard organizational changes were made to the regulations established by the IR by a final rule published September 29, 1995, in the Federal Register (60 FR 50455).

In addition to this rulemaking project, a separate rulemaking project (CGD 93–055) resulted in the publication of a Notice of Proposed Rulemaking (NPRM) which proposed complementary rules governing the carriage, use, registration, and defect notification for inflatable PFDs for recreational boats (June 23, 1995), Federal Register (60 FR 32861)). Additional procedures for approval of inflatable PFDs, and other types of PFDs, were included in the NPRM. These provisions were proposed separately because they affect other types of PFDs besides inflatables. The Final Rule for this project (CGD 93–055) is being published elsewhere in today's Federal Register.

This rule, establishing minimum safety standards for inflatable PFDs, is being made effective 180 days after publication in the Federal Register pursuant to 46 U.S.C. 4302(b). Although the IR was effective 30 days after its publication, it provided a new category for approval of PFDs, and did not change any existing approval procedures. Since this Final Rule changes regulations now in effect, it could affect persons who relied upon regulations in the IR which are now being changed. For this reason, the 180 day delay in the effective date under 46 U.S.C. 4302(b) applies. This should not affect the progress of manufacturers' design and testing, and therefore should not result in delay in getting approved devices to market. Manufacturers can proceed with design and testing during this period.

Public Meeting

A number of initial comments to the IR expressed confusion about the basis and applicability of the ''Life-Saving Index'' (LSI) used in the IR as an alternative path for approval. The LSI is a probability based risk assessment tool designed to evaluate a PFD design's overall lifesaving potential. Based on comments, the Coast Guard held a public meeting and training seminar to aid interested persons in understanding and applying the LSI analysis process. The meeting was attended by six PFD manufacturers, two inflation system manufacturers, an official from a boat owners association, a member of the public from the National Boating Safety Advisory Council (NBSAC), and representatives from Underwriters Laboratories (UL), the only laboratory currently recognized to perform the approval tests for inflatable PFD devices. A summary and video tape of the meeting are available as part of the public docket for inspection and copying where indicated under **ADDRESSES.** During the meeting, Coast Guard personnel discussed the history of this rulemaking, with emphasis on the development of the LSI and its role and usefulness in evaluating the overall lifesaving potential of various PFD designs. There was also a discussion of the PFD information pamphlet which accompanies the sale of inflatable PFDs and provides important information to the potential consumer before a PFD is purchased. Specific details of the meeting are discussed below in the appropriate sections.

Approval History

Under the IR, Coast Guard approval of inflatable PFDs and component materials has been possible since July 24, 1995. To this date, four manufacturers have started the approval process for at least 6 models of inflatable PFDs, but no device has yet received final approval. Additionally, no inflator or inflation chamber material has been completely tested to be accepted by the Coast Guard as meeting the requirements of the UL 1191 consensus standard for component materials incorporated by reference into the Coast Guard regulations. Although a number of manufacturers have completed preliminary testing of prototype designs of PFDs, sample PFDs for final testing have not been constructed. This is due to a lack of accepted component materials since a sample PFD undergoing final testing for Coast Guard approval must be constructed of the same or equivalent materials that will be used in commercially available manufactured products to ensure that the final products meet the approval standards.

Regulatory Information

The two main standards adopted by the IR and retained in this rulemaking are Underwriters Laboratories (UL) standards for inflatable PFDs and PFD components (UL 1180 and 1191, respectively). These standards were developed in accordance with the American National Standards Institute (ANSI) procedure for voluntary industry standards. In accordance with the ANSI procedures, interested parties were provided with an opportunity to participate in the development of the standards. The public was also given an opportunity to comment on the adoption of approval standards for inflatable PFDs in the ANPRM published on November 9, 1993 (58 FR 59428), and the IR published on June 23, 1995 (60 FR 32836). The ANPRM advised of the intention to use an industry consensus standard and encouraged interested, knowledgeable persons to participate in the ANSI standards making process. On February 24, 1994, notice was published in the Federal Register (59 FR 9015) of the Coast Guard's participation in the first consensus standards meeting with UL. This notice again invited interested technical experts knowledgeable in the field to participate in the meeting and process. Comments received in response to the ANPRM and IR were generally in favor of development of structural and performance standards for inflatable personal flotation devices and procedures for Coast Guard approval of inflatable PFDs. The UL standard (UL 1180) is complete, with the exception of several reserved sections.

Background and Purpose

The regulations in this final rule are intended to allow approval of PFDs which may be more appealing to recreational boaters than currently approved PFDs, thereby increasing the percentage of PFDs actually used by the boating public and saving lives. However, the Coast Guard notes that the currently approved inherently buoyant PFDs have an excellent lifesaving record. The Coast Guard boating statistics show that while boating activity was increased several fold, the number of fatalities has dropped from about 1,800 to 800 per year over the past 25 years, and this decrease is in part due to use of these inherently buoyant PFDs. The Coast Guard also notes that inherently buoyant PFDs are more appropriate for non-swimmers than inflatable PFDs. Non-swimmers may panic when they enter the water, and may therefore not be able to manually or orally inflate an inflatable PFD. Moreover, there are a number of boating applications for which inflatable PFDs are not suitable, as listed in the PFD information pamphlet. Therefore, inherently buoyant PFDs will continue to play a vital role in boating safety programs for the public.

Advisory Committee and Other Consultations

In developing these regulations the Coast Guard consulted with the National Boating Safety Advisory Council (NBSAC) and the National Association of State Boating Law Administrators (NASBLA). In May 1994, NBSAC passed a resolution recommending approval for Type I, II, III, IV, and V inflatable PFDs. PFDs differ in Type based on the environment in which they are designed to perform and their intended use. The various Types of PFDs are described in more detail in the IR. In 1988, 1993 and 1994, NASBLA also passed resolutions urging that approvals for inflatable PFDs be

granted as soon as possible. Additionally, the National Transportation Safety Board has recommended that the Coast Guard approve inflatable PFDs.

NBSAC formed a subcommittee to study the implementation of the various types of approvals that might be granted by the Coast Guard and developed an ''inflatable PFD objectives statement'' and ''performance goals''. Copies of these documents are included in the docket file for this rulemaking. The documents identified a number of goals that NBSAC determined to be appropriate in the effort to set standards for the manufacture and approval of inflatable PFDs. In November 1994, the full council passed a resolution supporting the objectives statement and goals.

After publication of the IR, NBSAC and NASBLA again considered the issue of inflatable PFD approval and passed resolutions recommending approval of inflatable PFDs. Both resolutions, though, objected to the modifications to the UL 1180 standard that the Coast Guard included in the IR. The details of the most recent deliberations and the resolutions are discussed with the appropriate comments below and the resolutions are included in the docket file for this rulemaking.

Inflatable PFD Studies

As discussed in the IR, the Coast Guard has sponsored two studies on the suitability of inflatable PFDs in the recreational boating environment: a 1981 Inflatable PFD Field Test, Report No. CG–M–84–1 and a 1993 study conducted by the BOAT/U.S. Foundation for Boating Safety. Each study involved the use of about 500 inflatable PFDs in a recreational boating environment. Copies of these studies are included in the docket file for this rulemaking. Initial review of these studies indicated that inflatable PFDs could not be approved without extensive servicing requirements or conditions on approval. However, as discussed below, developments in inflatable PFDs have allowed the Coast Guard to establish the approval standards for inflatable PFDs adopted in this final rule.

New Developments in Inflatable PFDs and UL Standards

New developments in the manufacture of inflatable PFDs, along with work done by UL in this area since the testing was conducted in the above studies, have improved the chances that inflatable PFDs will work when used and maintained by the average boater. The problems revealed by the two studies discussed above have been addressed in the UL standard. Consequently, PFDs meeting the requirements of the new UL standard, along with certain additional requirements included in this final rule, should not have the problems that prevented the Coast Guard from approving recreational inflatable PFDs in the past.

The Coast Guard is issuing a final rule for approval of inflatable PFDs at this time based on the need for more wearable PFDs, boater demand for alternatives and the development of more ''user serviceable'' inflatable PFDs. With these user serviceable PFDs there is a good chance that the user of the PFD will (1) recognize when the PFD needs servicing and (2) be able to perform the servicing correctly. These improved PFDs are equipped with inflation mechanisms (inflators) that are more user-friendly than previous models. User-friendly features are often referred to as mechanisms that are designed with ''good human factors''. Good human factors relate to the ease with which boaters can determine when their inflatable PFD needs rearming and the ease with which they can correctly rearm the PFD. Good human factors design will decrease the incidence of unarmed inflatable PFDs that were evident in the studies discussed above.

The UL standard defines two different performance levels for inflators. For an inflator to meet the requirements of the UL standard, a high percentage of test subjects must be able to correctly identify whether an inflator is properly armed and to be able to rearm the device with no training other than use of the owner's manual provided by the manufacturer and toll-free calls to a manufacturer's help line, if one is available. The performance level assigned is based on the percentage of passing test results. At this time, an inflator capable of being accepted at the highest level is not available at a reasonable cost, but at least one such inflator is under development. The characteristics of the higher performing inflators (use code 1F) are described in item 1 of the discussion of specific comments below. If properly maintained, inflatable PFDs with the lower level performing inflation mechanisms provide high reliability, though the probability of proper maintenance (maintainability) remains a key component of ensuring their effectiveness. The information pamphlet and owner's manual required to accompany the sale of inflatable PFDs will emphasize the need for proper maintenance of these devices. Additionally, the inflatable PFD label will include warnings to check that the unit is fully armed before donning and to perform a service test at least once each year.

Discussion of Comments and Changes

Seventy comments were received from fifty-seven individuals and organizations in response to the interim final rule (IR) published June 23, 1995. Thirty-eight of those commenting were boaters, nine were PFD and component manufacturers or PFD consultants, and seven were from organizations or associations representing manufacturers, boaters, cities or state boating law enforcement. The remaining three groups commenting were laboratories or dealers. A number of manufacturers and organizations commented more than once. The Coast Guard has reviewed all of the comments and revised the rule as appropriate. The comments have been grouped by general and specific issues, and are discussed below.

General Comments

None of the comments opposed Coast Guard approval of inflatable PFDs; 49 comments urged the Coast Guard to approve inflatable PFDs as soon as possible.

Boaters submitted the largest number of comments. Nearly all of their comments supported Coast Guard approval of inflatable PFDs as soon as possible, and many of them indicated that boaters would be inclined to wear an inflatable PFD more frequently than a currently approved PFD. Many of these comments either explicitly or implicitly cited the published views of a boating organization, which opposed many of the IR provisions. Two comments also specifically favored the use of inflatables for Coast Guard Auxiliary patrols because of their increased wearability. Additionally, one comment pointed out the potential increased safety benefit of greater flotation of inflatable PFDs when compared to presently approved inherently buoyant PFDs.

Wear Rates and Wearability: Ten comments noted that they favored the use of inflatable PFDs because of their comfort (i.e., easy to wear, not as hot, less bulky, and greater maneuverability when performing operations aboard a boat). Six commenters indicated that they currently owned yoke style inflatable PFDs that they were pleased with. Eight commenters, including all but one of the above owners, indicated they currently wear a PFD continuously. Eight more comments indicated that the writer would wear an inflatable if approved and available. In addition,

several comments from boaters indicated that they were not opposed to a requirement that inflatables be worn to be considered as approved devices. Approval of a PFD signifies that the PFD can be counted towards the ''carriage requirements'' (33 CFR 175, Subpart B) which requires boats to have on board specified quantities and Types of approved PFDs. This totals 21 comments whose writers either presently wear or would wear inflatable PFDs if they were approved. Three comments from boaters indicated that they opposed any condition that required PFDs to be worn to meet the carriage requirements.

Four comments indicated the belief that inflatable PFDs would save lives because people would be more apt to wear them. This view was bolstered by two comments which noted that 80 percent of drownings occur as a result of people not wearing PFDs, as opposed to wearing the wrong kind of PFD, and that these accidents were usually sudden events that precluded the donning of a PFD after recognizing the event was about to happen. Five other comments indicated that if an impact on boating accident drownings is expected, there needs to be an incentive to increase wear rate of PFDs, such as requiring that PFDs be worn to count as meeting the carriage requirements, particularly on small boats. The Coast Guard recognizes that increased wear of PFDs is essential to increase the number of lives saved.

Maintainability: Two comments noted that inflatable PFDs have been in military use since the beginning of World War II. One of these comments noted using Navy-issue inflatables in World War II and questioned why the Coast Guard would delay the approval of inflatables for the boating community, when a perfectly satisfactory inflatable PFD was available 50 years ago. The Coast Guard notes that inflatables used by the military both in the past and currently are not maintained by the individual user, but rather by trained professionals. As discussed in the ANPRM and IR, ensuring that inflatable PFDs are maintainable by the user has been one of the key concerns for introduction of inflatables to recreational boating. As previously mentioned, lack of proper maintenance adversely affects reliability due to the probability that some PFDs will not be rearmed or will be rearmed improperly. Due to the importance of this aspect of inflatable PFD use, the Coast Guard emphasizes that users should check their inflation mechanisms frequently.

Non-swimmers and Children: Six comments from boaters expressing support for approval of inflatable PFDs indicated that their support was based on concerns about the safety of family members who were either children or poor swimmers. These comments suggested that children and poor swimmers would be more likely to wear an inflatable PFD than other types of currently approved PFDs due to an inflatable PFD's increased comfort and more desirable appearance. These comments concern the Coast Guard because they suggest that the desire for a more comfortable device may lure people to use inflatable PFDs inappropriately. The Coast Guard notes that the consensus committee preparing the UL 1180 Standard, incorporated into this rule, specifically pointed out that PFDs approved under the standard are not suitable for non-swimmers or children. Additionally, this issue was specifically raised in the ANPRM and IR of this rulemaking. The Coast Guard emphasizes that under this rule, inflatable PFDs cannot be approved for children and that non-swimmers should be strongly discouraged from choosing this type of lifesaving device.

Approval of inflatable PFDs for children is not now considered appropriate by the Coast Guard and UL consensus standard committee due to concerns about a child's ability to take the necessary steps to initiate inflation in an emergency or perform backup inflation in case the primary system fails. The Coast Guard notes that the issue of inflatable devices for children may be revisited after more experience is gained with approval of inflatable PFDs for adults.

As for the use of inflatable PFDs by non-swimmers, as noted in the IR, the Coast Guard acknowledges that there is no practical way that law enforcement officials can conduct a field assessment of swimming abilities, and thus there are no regulations restricting the use of inflatable PFDs by non-swimmers. However, because of the unique risks associated with these devices, the labeling and information pamphlet for these PFDs are required to explicitly state that the devices are not recommended for use by non-swimmers.

Terminology: One comment suggested that the barrier between wearable inflatables and many potential consumers is that the use of the word ''approved'' by the Coast Guard to denote devices which have met the stated requirements, and that the term ''approved'' is not the most accurate or effective term. The comment suggested substituting ''recognized as a required device'' or ''meets Coast Guard minimum carriage requirements'' for the term ''approved''. The Coast Guard has not adopted this suggestion. As previously discussed in the IR, the Coast Guard acknowledges that the term ''approved'' may cause some confusion and misperceptions to the public. However, both the terms suggested by the comment may cause even more confusion. The term ''approved'' is well recognized by the public and has been used by the Coast Guard for over 50 years to denote that a lifesaving device meets Coast Guard minimum safety standards. The term ''recognized as a required device'' may confuse the boating public as to the implications of a device being ''recognized'' versus ''approved''. As for the phrase ''meets the Coast Guard minimum carriage requirements'', in addition to possible confusion over the implications of a new term, the phrase is not being adopted because it may cause boaters to mistakenly believe that the carriage requirements are met by merely having that one device. In almost all cases, this is not true and to meet the carriage requirements, boaters may have to have several devices aboard their vessel.

Inflatable PFD Costs/Affordability: Thirteen comments from eleven boaters, one dealer, and a boat club addressed the issue of ensuring the approval of reasonably-priced inflatable PFDs. Comments on this issue were solicited in the initial ANPRM and were discussed in the IR. One comment acknowledged that Coast Guard approval of inflatable PFDs may bring costs down by increasing sales and competition. On the other hand, several of these comments indicated the belief that the Coast Guard's modifications to the UL 1180 standard would substantially increase the cost of approved inflatable PFDs without saving significantly more lives. Five of these comments specifically indicated the view that increased testing costs due to Coast Guard additions to the UL standard would keep manufacturers from seeking approval while another comment was concerned that Coast Guard approval would merely lead to the availability of limited products at high prices. Four comments thought that boaters would be less able to afford the PFDs made under the Coast Guard modifications than inflatable PFDs that only met the UL standard. Several others were simply concerned that the cost of inflatables would deter many boaters from buying an inflatable PFD. Two commenters specifically noted that they have been wearing the yoke style PFD with harness and found that

although many boaters inquired about the devices, the high cost seemed to be a deterrent to most boaters. One of these comments noted also that the rearming kits are fairly expensive.

Four comments urged the Coast Guard to make the regulations for inflatables stringent for safety purposes, but not to the point so as to drive the prices ''out of sight''. One of these comments expressed concern that the manufacturers would pass on the expense of additional approval requirements to the consumer, making the resultant PFDs unaffordable. The comment stated that safety of the boating public should be a high priority for the government and that the Coast Guard's requirements should result in an easy-to-wear, affordable, and comfortable inflatable lifejacket that meets the carriage requirements.

A number of PFD and component material manufacturers' comments also addressed cost. These comments objected to the IR's required use of use code 1F inflators, in place of the LSI evaluation. The objections centered on the fact that currently, the only use code 1F inflator which could be accepted would be disposable, and therefore prohibitively expensive to maintain. At the time the IR was published, the Coast Guard believed that use code 1F inflators would be available at a reasonable cost. Unfortunately, since that time, no affordable use code 1F inflator has been produced. However, while the IR did encourage use of 1F inflators, it did not require them for approval.

Additionally, several manufacturers objected to some of the costs of testing associated with the requirements added by the Coast Guard to the UL requirements. These objections are discussed further with the specific comments below.

The Coast Guard notes that the lowest priced PFDs permitted by the UL standard are eligible for approval under the IR and this final rule. Less expensive PFDs that differ from UL 1180 may also be approved under the equivalency provisions contained in the IR and which are being retained in the final rule. The additional testing costs imposed by the Coast Guard modifications to the UL standard requirements under the IR are minimal and will decrease under this final rule. In addition, the lifesaving benefits of the additional provisions retained in this final rule outweigh the associated costs as discussed under ''Regulatory Evaluation.''

Comments on specific requirements are discussed below under ''Specific Comments and Major Areas of Revision''.

IR Consistency with UL Standards: Nine comments from manufacturers, manufacturing organizations, and boating organizations and various comments from boaters requested that the Coast Guard amend the requirements for approval of inflatable PFDs contained in the IR so as to make them more consistent or, in the case of a few comments, identical with the requirements of UL 1180 and UL 1191 standards.

A number of comments objected to the perceived delay in making Coast Guard-approved inflatable PFDs available to recreational boaters. These comments expressed the opinion that these delays were caused by the Coast Guard requirements contained in the two UL standards adopted, UL 1180 and 1191. The general consensus of these comments was that the increased safety benefits of having approved inflatables available and worn by boaters would outweigh any potential increase in safety benefits resulting from the manufacture of inflatable PFDs that met the IR's additional requirements. One comment suggested that the IR places too much emphasis on ensuring that the vests are 100 percent perfect, and other comments cited overregulation as the major obstacle to having the vests approved.

The Coast Guard notes that though a number of manufacturers have completed preliminary testing of designs, no inflatable PFD has yet been submitted for final testing and approval. This delay has been caused by the lack of accepted component materials (inflators of any use code and inflation chamber material) which are needed to produce any device submitted to the Coast Guard for final approval. The interim rule did not impose any additional requirements to the UL 1191 consensus standard, which sets the acceptance standards for component materials.

Several comments indicated that changes to the UL standard embodied in the IR were not consistent with the promises the Coast Guard made to the industry. The Coast Guard notes the statements in the ANPRM and meeting notice for the first consensus committee meeting which clearly define the Coast Guard's intentions and commitments in entering into the rulemaking process with the aim of using an industry consensus standard. These documents show that the Coast Guard anticipated the possible need for additions or modifications to the consensus standard to meet the minimum level of safety deemed necessary and clearly stated that such modification or additions would be incorporated into the final approval standards if necessary.

Two of the comments discussed above requested that the final rule base Coast Guard approval on the requirements of UL 1180 with additional requirements limited to product marking and point-of-sale consumer information. UL commented that they expected the rule to contain a limited number of requirements supplemental to the UL 1180 and UL 1191 such as a USCG information pamphlet and PFD production quality control related requirements. UL also recommended that the Coast Guard make additional modifications and additions to the first edition of the 1180 standard, such as making trade-offs between requirements for donning and secureness of fit, revising the added visibility looking to the side test, and adding warning markings. The individual changes suggested are discussed below.

Two comments included resolutions requesting that the Coast Guard rescind those portions of the interim rule that impose additional requirements for Coast Guard approval beyond those imposed by UL 1180. As noted above, one of these resolutions was passed by the National Association of State Boating Law Administrators (NASBLA) which noted that its membership is deeply concerned that additional requirements beyond the UL 1180 standard may jeopardize the development and approval of fully inflatable PFDs. NASBLA recommended that the Coast Guard amend the IR to reflect only those standards currently in the incorporated UL standards.

The second resolution was submitted by the PFD Manufacturers Association (PFDMA), which represents manufacturers of PFDs and component materials. PFDMA and supporters commented that the Coast Guard should rescind almost all portions of the IR which impose additional requirements to the UL standards. However, the comments did note that the Coast Guard approval regulations do need to address labeling and information pamphlet requirements, areas which UL 1180 either does not address or does not do so adequately. The Coast Guard notes that two sections of the UL standard are ''Reserved'', those dealing with production quality control requirements and with the information pamphlet. As a result, the Coast Guard's requirements in these areas are the only requirements for those items.

NBSAC, an advisory committee charged with advising the Coast Guard on boating safety issues, approved a resolution, by a vote of 10 to 8, that

recommended that the Coast Guard requirements for approval of inflatable PFDs congruent with the consensus standard embodied in UL 1180 without exception or additional requirements. However, in a written survey of the NBSAC members, immediately following the meeting which adopted the resolution, many of the members indicated support for the Coast Guard's modifications to the UL standards. The Coast Guard therefore intends to raise some of these issues in the consensus committee when UL reopens UL 1180 and UL 1191 for revision.

Several comments from individuals favored the Coast Guard's modifications to the UL standards. One comment opposed the idea of merely adopting the UL standard by stating that it is not desirable to set a rigid pass/fail criteria for approval of any device in the form of an adopted consensus standard that fixes for a long period requirements based on currently available technology and designs. The comment continued by explaining that the Coast Guard's approval process should encourage and reward improvements in reliability and effectiveness above the level of what is feasible today at a reasonable cost. According to the comment, this approach would lead manufacturers into entering a desirable, continuing race to produce more comfortable and affordable PFDs, and that an industry consensus standard alone cannot provide such an incentive. Additionally, one comment from a PFD design consultant expressed the view that by having a clearly defined alternative to strict compliance with UL 1180, innovative and consumer responsive products would be more likely to make it to market. The Coast Guard notes that both the IR and this final rule allow for the possibility of approval of alternative designs that do not conform to the promulgated standards. As a result, manufacturers have had, and continue to have, the option of receiving approval for innovative inflatable PFD designs. The Coast Guard recognizes that trade-offs must be made between absolute safety and making inflatable PFDs both affordable and available to recreational boaters who would not typically wear currently approved devices and who are prepared to accept the increased care and servicing requirements needed to maintain reliability.

UL Standard Conflicts and Shortcomings: Comments from UL and manufacturers indicated that there were areas in the UL standard that need revisions or improvement as discussed below. Most of these changes are in areas addressed by the IR but some deal with conflicting requirements or requirements that are believed by some manufactures to be set unintentionally too high within the UL standard.

One comment stated that even without the most objectionable provisions of the IR, that is the LSI and ''Approved Only When Worn'' provisions, the standard as recommended by the consensus standard committee was problematic in many areas. The comment expressed the view that the UL standards were difficult and unrealistic in many areas, but might be ''fixable''. The commenter also expressed the belief that as large and complex as the UL documents were, they would likely have contradictions or deficiencies requiring correction consistent with the specification's stated goals. The commenter expected that, for example, the sections of the UL standard that conflicted with the use of disposable inflation mechanisms would be modified, and that the goal of having disposable inflators as an option would not be abandoned.

Missing Standards for Wearability and Approval Type: The Coast Guard notes that the UL standard calls for the USCG to set approval type for inflatable PFDs based on a PFD's performance, serviceability, and status indicators, but does not establish how these characteristics are to be used. As discussed at the first consensus standards meeting in March 1994, the Coast Guard indicated that its approval type would be determined after the characteristics of the PFDs were identified by the standards. As stated in the ANPRM ''[t]he consensus standard may not address all the issues and characteristics essential to the Coast Guard,'' and alternatives ''remaining unresolved will presented * * * for comment.''

As initially drafted, the UL standard had a test for the projected wear rate that a PFD design would provide. This provision, which was referred to as ''wearability'', was deleted from the standard at the final standards committee meeting. The consensus committee was informed by the Coast Guard that the lack of a wearability standard would have to be justified or otherwise addressed. The committee failed to do so. Therefore, in the IR the Coast Guard provided conditional approval, requiring a device to be worn to meet carriage requirements, in addition to the UL standard as one way to address the lack of a wearability standard. One comment indicated that unconditional approval based on what is available today is undesirable and others supported the IR's conditional approval as discussed above. The lack of a wearability standard within the consensus standard will require the Coast Guard to closely monitor accident statistics and revise the rules if necessary. Conditional approval is discussed further below.

Based on the above comments and on internal discussions within the Coast Guard detailed below, the Coast Guard is minimizing the additions and modifications to UL 1180 required for Coast Guard approval but retaining those which in the Coast Guard's judgment are essential to safety. The Coast Guard is retaining the two provisions of the IR for which the UL standard had reserved sections. These two areas, the PFD information pamphlet and production quality control, as mentioned above, were discussed by several commenters.

Nearly all the provisions being deleted from the IR may, in the future, further the lifesaving goals adopted by NBSAC and the Coast Guard as discussed in the IR. Therefore, those provisions will be proposed by the Coast Guard for inclusion in UL 11180. This will allow the Coast Guard to pursue the incorporation of these changes in concert with the industry and other interested parties, as many comments indicated the desire to proceed.

The Coast Guard notes that the PFDMA had expressed an interest in working with the Coast Guard, Underwriters Laboratories (UL), and others to revise the interim rule based on comments and resolutions which have been forwarded. As mentioned above, the Coast Guard does intend to continue to work with the consensus standards committee with the goal of incorporating as many of the provisions being deleted from the IR by this rulemaking as possible into UL 1180.

The comments on specific provisions of the regulation and the revisions made by this rulemaking are discussed below.

Timeline for approval: Two comments discussed the validity of the stated goal of the Coast Guard in the IR to have significant numbers of approved inflatable PFDs available to the public for the 1996 boating season. One comment noted that for approved inflatables to be available for the 1996 boating season, achievable and well defined requirements needed to be in place well in advance of the October 23, 1995, comment deadline for the IR. Another comment stated that it is highly unlikely that manufacturers will be able to make significant number of inflatable PFDs available to the public in 1996. The comment explained that because of the many unanticipated problems associated with meeting the requirements of the IR, manufacturers

would have to return to the design phase to re-engineer their products before submitting them for approval. According to the comment, when this process is completed, 1996 will probably be over. The comment projected that unless requirements are substantially changed, the regulation established by the IR would not result in inflatable PFDs becoming more than 3 percent of the total PFDs sold by the year 2007. The comment also stated that the Coast Guard and NBSAC goal of saving 210 lives by increasing the wear rate to 66 percent is desirable but not a rational projection resulting from the IR.

The Coast Guard shares the concerns regarding making approved inflatable PFDs available as soon as possible, however, it must balance that concern with the need to ensure that Coast Guard standards for approved inflatable PFDs will achieve a reasonable balance between safety and cost. The Coast Guard notes that nothing currently prevents the sale of non-approved inflatable PFDs to the public.

Specific Comments and Major Areas of Revision

The major areas of comment and revision to the IR standard are separated into categories and discussed below. For those areas in which the Coast Guard is deleting requirements from the IR, the Coast Guard intends to suggest that most of the deleted requirements be considered for inclusion in a revised version of the UL 1180 standard. Additionally, the Coast Guard intends to suggest the requirements from the IR which are being retained be considered for inclusion in a revised version of the UL 1180 standard. If the UL 1180 standard is revised to include the changes, the rules will be revised to delete these provisions from the subpart and update the incorporation by reference to cite the revised standard.

1. Lifesaving Index (LSI) and Use Code 1F Inflator [Sections 160.076–5, –7, –9, –13(c)(10), –21(e), –23(a)(1), –27, and –37(b)(4 & 5)]

As the IR's approval requirements concerning use code 1F inflators and the LSI are interdependent, they are being discussed as one category.

IR Requirement: Under the requirements for inflatable PFDs in the IR, the Coast Guard requires that, except for inflatable PFDs equipped with inflators with 1F use codes, an LSI analysis be performed to evaluate the overall lifesaving potential of an inflatable PFD submitted for approval. A use code 1F inflator, which has a cylinder seal indicator, provides a visible indication to the user of the cylinder status. The same readily visible indication of inflation cylinder status is not available with use code 2F and 3F inflators. The LSI analysis, therefore, was provided as an alternative to allow other reliability and wearability factors to compensate for the lack of visible cylinder status indication. Under the IR, the Approval Type (I, II, III, or V) given to any particular PFD design, except for those with 1F inflators, would depend on the results of the LSI analysis. If, as a result of the LSI analysis, it was determined that a conditional approval would be appropriate for a particular PFD, the most likely condition for approval would be the requirement that a PFD would be required to be worn to count toward the PFD carriage requirement.

Comments on Use Code 1F Inflator Requirement: Thirteen commenters specifically discussed the requirements related to inflation system indicators with a 1F use code. Of these, four comments favored the IR's requirements regarding the use of a 1F inflator. One cylinder manufacturer described the IR as a great step towards saving lives and commended the Coast Guard and UL for properly addressing the gas cylinder issue by including indicators within the inflator mechanism. Another comment favoring use code 1F inflator requirements did so by reasoning that the Coast Guard's approval process should encourage and reward improvements in reliability and effectiveness beyond what is feasible today at reasonable cost and therefore should have a built in mechanism, such as the requirement for the LSI analysis and 1F inflators to encourage technological advances. Three comments, including one of the above, expressed hope that the Coast Guard's regulations would require approved PFDs to have an easy way to check the CO_2 cartridge to ensure it was charged, such as fire extinguisher gauges or push-and-release pop-out pins. Use code 1F inflators include indicators that satisfy this need.

The remaining nine commenters that discussed inflators disagreed with the IR's emphasis on cylinder indication to increase operational reliability of inflatable PFDs. Seven comments suggested that the Coast Guard withdraw the requirement to either have a use code 1F inflator or utilize the LSI analysis, for all but Type I inflatable PFDs. Four of these comments indicated that there is lack of current technology to provide full cylinder indication at a reasonable cost. These comments reasoned either that use code 1F inflators remain beyond state-of-the-art and therefore their use should not be required or that the use code 1F requirement may possibly delay the production of Coast Guard approved inflatable PFDs. One comment added that the highest level of cylinder indicator was not necessary because the requirements for redundant inflation systems and for swimming ability, adequately compensates for the remote possibility of primary inflation system failure. The Coast Guard notes that a ''recommendation'' against use by non-swimmers is not equivalent to a ''requirement'' and that, as discussed above, any swimming requirement would be unenforceable.

One comment cautioned the Coast guard with regard to drawing conclusions from the informal study at NASBLA's annual meeting discussed in the IR, where only 2 out of 18 participants were able to correctly identify the serviceability of 4 older style inflation mechanisms. The comment remainded the Coast Guard that the newer styles of inflators are designed so that it is easier to determine when an inflator has already been fired. The comment also cautioned the Coast Guard not to presume that all systems were represented in the field study, and that no mechanism is completely foolproof, including one with a cylinder seal indicator.

The Coast Guard remains concerned with the inflation systems used on inflatable PFDs. The design of the inflation mechanism is important because proper maintenance plays a crucial role in ensuring the reliability of an inflatable PFD. If the status of the inflator mechanism is easy to check, then it is more likely that a boater will check the status often and correctly. A recent Coast Guard study of the causes of marine casualties indicated that 80% or more of all marine casualties are caused by human error and that these were often induced by inadequate attention to human factors in the design and performance standards for equipment. The Coast Guard's findings on this subject are reported in the ''Prevention Through People'' quality action team report, the Notice of Availability of which was published in the February 16, 1996, Federal Register (61 FR 6283).

Comments on PFD Life-Saving Index Evaluation: Twelve commenters specifically noted reservations about the ''Life-Saving Index'' (LSI), while three comments expressed unqualified support of this alternative approval path, generally because of the flexibility and encouragement of improvements thought to be fostered by the LSI requirement. Additionally, the October 30, 1995, NBSAC resolution discussed

above favored continued development of the LSI for possible future use.

The three comments which supported the LSI concept thought that the LSI might be the most potentially beneficial portion of the IR, with one stating that it would ''allow approval of unique and novel designs that offer lifesaving potential equal to or greater than that of approved devices * * * these designs may prove to be very comfortable, affordable and popular with the boating public.'' The comment continued that promoting innovation in design actually allows the end user to have a voice in what can be used to meet Coast Guard requirements.

Another comment which supported the LSI expressed pleasure with the results of the NBSAC member survey for retaining the LSI, in which 9 out of 14 respondents indicated that they favored retaining the LSI as a clearly defined alternative to strict compliance to UL 1180. The comment continued that through the LSI, innovative and consumer responsive products will be able to make it to market, and that without the LSI, inflatable PFDs will be static in design. Also the comment indicated that if the LSI were eliminated, the Coast Guard would be limiting the ability of manufacturers of innovative PFDs to fairly compete with current products. As mentioned above, the Coast Guard notes that both the IR and this final rule allow for the possibility of approval of alternative designs that do not conform to the promulgated standards. As a result, manufacturers have had, and continue to have, the option of receiving approval for innovative inflatable PFD designs.

One comment which supported the overall concept of the LSI objected to the LSI scheme if inflatable PFDs of low reliability or effectiveness receive the same Coast Guard approval status as other PFDs. If this were to occur, the comment continued, the boating public should be notified of the reduced reliability of the device at the point of sale.

On the other hand, most comments received by the Coast Guard expressed reservations about the LSI analysis as presented in the IR. Six of these comments expressing concerns noted that LSI concepts have merit in a broad application, but indicated apprehension about its application to individual items.

Five comments specifically requested that the Coast Guard delete the LSI from the IR. One of these comments also stated that, as opposed to the LSI, what the industry needs is a realistic standard of performance, keyed to individual product types. Another comment stated that the LSI and conditional approval provisions added by the IR to the UL standard will hamper the Coast Guard's desire for a flow of innovative, new products.

Two comments and a number of participants in the public meeting stated that mandating the use of the LSI as an alternative to having the use code 1F inflation mechanism, is unacceptable. These comments criticized the LSI saying the validity of the LSI elements chosen and weights which have been applied, do not appear statistically valid, uniformly applied, or adequately defined. Another comment noted that adequate development of the LSI process would likely require an *ad hoc* committee effort.

A concern expressed at the public meeting on the LSI and in several comments, related to the IR's provisions for an annual review of the LSI. This concern focused on the fear that an annual review could potentially subject manufacturers to revocation of approval and the resulting possible liability. In addition, several other comments and meeting participants cautioned that the LSI factors will become moving targets that will unnecessarily invite litigation against manufacturers as factors and weights are changed.

Two comments noted that approval classification, i.e., the USCG Type designation for a PFD, should coincide directly with UL 1180 ''performance type'' without requiring an LSI evaluation for approval of any specific PFD model. These comments reasoned that because the performance required by UL 1180 is significantly higher than required for any other recreational use PFD, there is no need to ensure the lifesaving potential of a device through the LSI. The Coast Guard notes that while the UL standard requires in-water performance and other increases, it also permits a decrease in reliability compared to inherently buoyant PFDs. The Coast Guard believes that the increase in wearability expected by many commenters will be needed in addition to the UL performance increases for the lifesaving potential of most inflatable PFDs to equal that of inherently buoyant PFDs.

Final rule requirements: The requirement that a device either have a use code 1F inflator or be subjected to the LSI evaluation for approval was based on two studies, one conducted by BOAT/U.S. from 1990 to 1993 and one conducted by the Coast Guard with the USCG Auxiliary from 1979 to 1981. Both of these studies concluded that inflatable PFDs without visible indicators of the state of inflation cylinder charge would not be properly maintained by a substantial percentage of typical users. The maintenance deficiencies reported in the studies were of such a nature that the devices would not operate as intended. The Coast Guard was concerned that if a substantial percentage of lower-performing inflatables were not properly maintained, as the studies suggest, the widespread use of these types of devices could actually lead to an increase in drowning fatalities. In addition, the Coast Guard was concerned that as the lower-performing devices would be the least expensive, and therefore most accessible to boaters, the risk of improper maintenance would be compounded. The use of the LSI as an approval evaluation tool was intended to ensure that the inherent lesser reliability of inflatable PFDs, coupled with the lower in-water effectiveness and the additional reduction in reliability for lower-performing devices due to human error as observed in the studies, would be offset by other features or approval conditions on the PFD.

Most of the comments received on the IR, as discussed above, opposed the use of the LSI as an approval evaluation tool. The comments cited the untested, and potentially subjective, nature of the LSI. As discussed above, these comments strongly urged the adoption of the UL 1180 consensus standard for approval of inflatable PFDs without any additions or modifications except to address those areas in which UL 1180 is incomplete or inadequate. This view was supported by resolutions of NBSAC, NASBLA, and PFDMA.

After careful review of all of the comments, the Coast Guard has reconsidered its previous interpretation of the study results the NBSAC recommendation, and of the improvements to PFD inflation hardware which occurred as a result of the development of UL 1180 and 1191. Upon reconsideration, the Coast Guard noted that the correlation of the study results to actual use patterns in the market may not be entirely conclusive. In particular, the different methodologies of the Coast Guard Auxiliary and BOAT/U.S. Foundation studies yielded somewhat different results, calling into question the relative validity of those methodologies in assessing the behaviors of the overall boating population. The Coast Guard notes that many comments received from boaters, as discussed below under ''Approval Type'', suggest that wear rates for approved inflatables would be higher than was observed in the studies. Additionally, the inflators on the PFDs used in the studies did not incorporate

the performance improvements mentioned above. Furthermore, the comments from PFD manufacturers indicated that the IR requirement for conducting an LSI analysis for devices with 2F and 3F inflators, which was based upon the Coast Guard's initial interpretation of the studies, would severely hamper the efforts of PFD manufacturers to bring inflatable PFDs to market thereby delaying the safety gains considered possible as a result of introducing approved inflatable PFDs.

In the absence of conclusive evidence that the use of the LSI to evaluate inflatable PFDs with use code 2F and 3F inflators is necessary to avoid undesirable outcomes as the result of approval of inflatable PFDs for recreational use, the Coast Guard has removed the LSI from this final rule as a required evaluation tool for approval of all PFDs not having a use code 1F inflator. As suggested in many comments, this final rule provides for approval of inflatable PFDs with use code 1F, 2F, or 3F inflators in accordance with the requirements of the UL 1180 consensus standard, supplemented only as needed to address the portions of UL 1180 which are acknowledged as being incomplete or having significant safety implications. The Coast Guard believes that the potential benefit of increased PFD wear as the result of approval of inflatable PFDs for recreational boaters, in conjunction with the inflatable PFD performance improvements established in UL 1180, outweigh the potential risk of PFD failures due to human error. Nevertheless, the Coast Guard is strongly encouraging PFD manufacturers to emphasize the need for proper maintenance in their marketing and instructional materials. As inflatable PFDs are introduced to the recreational boating market, the Coast Guard will carefully monitor casualty data to ensure that appropriate adjustments are made to the UL standards or requirements in the event of negative outcomes.

The Coast Guard notes that it has used the LSI to aid its evaluation and analysis of PFD rulemaking projects since 1985, but this is the first regulatory project in which it was to be used as an approval evaluation tool. The Coast Guard's intent in inserting this requirement was to provide more flexibility for design approval. Although it is no longer required as an approval evaluation tool, the Coast Guard anticipates that the LSI will be used in the future as an evaluation tool for novel designs not specifically covered by UL 1180 and to evaluate rule changes, establish policy, and make equivalency interpretations. Additionally, the Coast Guard will continue development of the LSI as was suggested by a number of the comments discussed above, and the October 30, 1995, NBSAC resolution which favored continued development of the LSI for possible future use. Therefore the following sections are revised or deleted accordingly: §§ 160.076–5, –7(a)(1), –9(b), –13(c)(10), –21(e), –23(a)(1), –27, and –37(b)(4 & 5).

Future action: The uncertainty the LSI caused for manufacturers needs to be addressed in order for the probabilistic risk based assessment embodied in the LSI to be a truly viable alternate approval path. The Coast Guard will propose to develop the LSI as a consensus standard with participation of industry. If the LSI can be developed adequately to be a viable alternative path, it may be proposed as part of the approval process for PFDs in the future. As noted above, the Coast Guard will carefully monitor the effect of deleting the LSI and approving PFDs with either use code 1F, 2F or 3F inflators.

2. Approval Type [Sections 160.076–7, –9, and –39(c)]

IR Requirement: Under the approval requirements for inflatable PFDs in the IR, the Coast Guard provided the option of approving inflatable PFDs as Type V PFDs, which either would require that the PFD be worn to count towards the carriage requirement, or would have other conditions appropriate to their intended use. In the latter case, conditional approvals would be allowed for special PFDs designed for special circumstances, such as those for diving with recreational submersibles. Approval of this special category of devices is not addressed by the UL standard.

Comments on Conditional Approval and Approved Only When Worn:

Five comments indicated the need for an incentive, such as a condition that a PFD only be approved as meeting the carriage requirements if it is worn, to increase PFD wear rates. After noting that 80% of drownings occur because the victim is not wearing a PFD, one of these comments concluded that any regulation relating to PFDs should require that PFDs be worn, particularly on small boats, if the Coast Guard expects to have an impact on boating accident drownings. Several comments from boaters indicated that they were not opposed to a requirement for inflatables to be worn, and as discussed above, there were 21 comments that either favor required wear, presently wear, or would wear inflatable PFDs.

One of the comments requested that approval of all inflatable PFDs be conditional on the PFD being worn and noted that approvals that are contingent on the device being worn may increase use, grant boaters access to approved devices, allow the industry to sell approved devices, and allow price and comfort to drive the market. Another comment from a manufacturer that also favored conditional approval for all inflatable PFDs, not just Type V, noted that the condition would benefit and promote: wear among those who purchase an inflatable PFD, better care and maintenance of the inflation among those who wear it, and redundancy in personal lifesaving equipment aboard vessels where space is not limited.

One comment suggested adding the condition ''in presence of perceived danger'' to the ''approved only when worn'' provision to make the conditional approval more acceptable and reasonable. It is the Coast Guard's view that for most accidents danger is often unperceived, and that such a requirement would, instead of encouraging increased wear, result in boaters wearing PFDs less often under the mistaken belief that the need for them was limited to situations when imminent danger is apparent. Additionally, as with a swimming ability requirement, it would not be feasible for law enforcement personnel to enforce such a condition.

Two comments that favored required wear, noted that to get more comfortable PFDs on the market and achieve wider use than currently approved PFDs, it may be necessary for the Coast Guard to relax the standards of reliability and effectiveness. One of these comments indicated that reduced ''reliability or effectiveness'' in combination with the condition that a PFD is ''approved only when worn'' should be an available approval option to permit manufacturers to reduce the cost of a device.

On the other hand, several comments from manufacturers and from boaters indicated that they were opposed to any requirement for inflatables to be worn. Three comments from boaters indicated that they opposed any condition that required PFDs to be worn to meet the carriage requirements. One stated that the introduction of the ''Approved Only When Worn'' concept is curious in light of the results of another Coast Guard interim rule which set approval standards for hybrid inflatable life jackets (50 FR 33923; August 22, 1985) which had adopted the same requirement. A hybrid PFD uses a mixture of inherently buoyant material and inflation to provide flotation. In the commenter's opinion the effect of the action was the ''kiss of death'' for hybrid

PFDs. In addition, the comment noted that if this requirement was truly justified for inflatables, then it is equally justified for inherently buoyant vests. The Coast Guard notes that there are two significant differences between the hybrid PFDs and inflatables: comfort and price. Hybrid PFDs do not provide as much improvement in comfort, and hence increased wearability, as inflatables because of their greater bulk and body coverage. Additionally, inflatables only have one means of buoyancy, and therefore will be less expensive than hybrids and represent a much smaller incremental increase above the cost of an inherently buoyant PFD. The Coast Guard also notes that the option of approving hybrid PFDs without the requirement that they be worn to be considered approved has been available since February 1995. Since that time only one manufacturer has sought approval without this condition. This fact appears to confirm that the approval condition is not the sole reason for the lack of retail success of hybrid PFDs.

Final rule requirements: The Coast Guard adopted the option of conditional approval in the IR for inflatable PFDs without use code 1F inflators but, as discussed above in the discussion of the use code 1F inflators and the LSI, the Coast Guard is deleting the use code 1F inflator provision as imposing conditional approval from the final rule for PFDs meeting UL 1180 because of the potential impediment that the conditions may have on the sales of devices to recreational boaters.

In this final rule, conditional approval is being used only for PFDs which do not comply with the UL standards and which are intended to be used in some special application or manner, such as diving with a ''wet'' submersible vessel, i.e., a vessel designed to propel a person using SCUBA, or partially wet submersible vessel. The Coast Guard believes that such designs can provide boaters with an effective lifesaving alternative only if the user understands the PFD's limitations and is used accordingly. Conditional approval serves these ends and may make more affordable alternatives available to users who wish to have an approved supplemental PFD on board for occasional use or who are willing to comply with the approval conditions to have the device count as a replacement PFD to meet the carriage requirements. The lack of a wearability standard within the consensus standard or conditional approval in the regulations will require the Coast Guard to closely monitor accident statistics and revise the rules if necessary. Therefore, the following sections are revised or deleted accordingly: §§ 160.076–7, –9, and –39(c).

3. Repack Evaluation (Section 160.076–25(c)(2))

IR Requirement: UL 1180 does not address repacking. Under the IR, however, an inflatable PFD being tested for approval must pass an evaluation in which test subjects demonstrate that they can repack the PFD, or refold the yoke-style design so that it will function properly when donned and used again. After being repacked the PFD must be ready for donning and manual inflation in or out of the water, and for oral inflation in the water. There is no time limit associated with the test. The test is not required for devices the manufacturer requires to be professionally serviced.

Comments: One manufacturer commented that the requirement for a repack evaluation test is a good improvement, because most designs currently available are very difficult to repack. However, a second comment stated that the requirement that each test subject perform three repack evaluations is excessive and adds expense. The comment noted that a single repack evaluation would adequately address the necessary safety considerations. The Coast Guard notes that as the requirement is written in the IR, the PFD's suitibility for use in the specific test conditions noted above must be assessed after the repacking. The Coast Guard believes that all of these conditions can be properly evaluated after the test subject performs only one repack. Therefore, only one repack evaluation is needed for approval, but a follow-up assessment must be conducted by the test laboratory to ensure that all of the cited UL 1180 conditions are evaluated.

Final rule requirements: The Coast Guard is retaining the repack evaluation requirement in § 160.076–25(c)(2), but is making editorial revisions to clarify that only one repack evaluation is required. Inflatable PFDs that pass this test will have a higher in-service operational reliability than designs not meeting the requirement because they will be less likely to be repacked or refolded such that inflation lanyards and the like are inaccessible for emergency use or unusable without disassembly.

4. 45-Sec. Average Donning Time, Donning Relaxation, and Reporting Subject Disqualification [Section 160.076–25(c)(1)]

IR Requirements: A 45-second average donning time requirement was included in the IR in addition to the UL 1180 imposed 60-second maximum limit for each subject. Additionally, unusual problems with the reference vest used for the donning time test are required to be reported to the Coast Guard, as this is a new reference vest that has not been previously used for testing purposes. A longer donning time is permitted for designs requesting approval with conditions which are not yet addressed in UL 1180.

Comments: Except for the NBSAC survey discussed above, comments on the average donning time test were not favorable and advocated elimination of this requirement. One comment noted that in administering a donning time test, consideration should be given to the trade-off that exists between the simplicity of donning a PFD and the secureness of the device during water entry. The comment suggested that the Coast Guard eliminate the 45-second average donning time requirement and only require the 60-second maximum in UL 1180. Another comment indicated that the average time requirement has reduced the time limit from 60 to 45 seconds, and did not understand why an inflatable PFD should be donned faster than an inherently buoyant PFD. The Coast Guard notes that the 45-second average donning time requirement is actually a second requirement in addition to the UL 1180 60-second maximum donning time requirement. The requirement is not a significant reduction in donning time but a change in the method of evaluating the test results.

Final rule requirements: The average donning requirement was added in the IR as a supplement to the 60-second maximum time requirement contained in the UL 1180 standard, in order to effectively measure donning-time performance of PFDs. Historically, nearly all designs of inherently buoyant and hybrid PFDs that pass a 60-second maximum requirement, have been shown to pass a 45-second average requirement as well. The Coast Guard inserted the average requirement in the IR because, overall it is a better tool for assessing whether designs are improving or whether they are getting more difficult to don. No reasonable PFD design would be denied approval solely as a result of the average requirement. Unless PFDs are required to be worn, donning is a critical part of the survival process.

However, the average donning time test provides limited additional safety and may slow the availability of inflatable PFDs to boaters. Therefore, the Coast Guard is deleting the average donning time test requirements contained in the IR at § 160.076–25(c)(1)

but retaining the requirement that a PFD meet the 60-second maximum donning time requirement in UL 1180.

5. Average Freeboard for Type II and Freeboard Reporting (Section 160.076–25(c)(3)(i) and −25(c)(4)(i))

IR Requirement: UL 1180 contains both an average and minimum freeboard requirement for performance types I and III PFDs, but only contains a minimum freeboard requirement for performance type II PFDs. To make the requirements consistent for all types of PFDs, the IR contained an average freeboard requirement for approval Type II PFDs. As part of the IR, freeboard is required to be measured and reported in order that PFD performance trends can be effectively monitored by the Coast Guard.

Comments: One comment stated that the 4.25 inch average freeboard requirements for Type II PFDs contained in the IR is excessive based on the 3.25 inch per subject minimum freeboard requirement, contained in UL 1180. The commenter informed the Coast Guard that they had never seen an average freeboard requirement applied and were not aware of any body of data to support its use. As mentioned above, the Coast Guard notes that the UL 1180 standard has both minimum and average freeboard requirements already in place for performance type I and III PFDs and that the performance type II requirements are the exception.

Final rule requirements: Although UL 1180 contains both average and minimum freeboard requirements for type I and II PFDs, the UL standards committee could not come to an agreement on the average requirement for performance type II PFDs and therefore omitted the average requirement for type IIs only. As a result, UL 1180 only contains a minimum freeboard requirement for Type II PFDs and no average requirement. Although adequate for safety, a minimum requirement is not conducive to monitoring trends, comparing performance, or promoting continuous improvement.

The Coast Guard is deleting the average freeboard requirement for Type II PFDs as well as the freeboard reporting requirement, and will ask UL to voluntarily measure and calculate average freeboard and report the results to the Coast Guard. As a result, although the safety of any individual PFD will not be effected, until the UL standard can be updated, an inconsistency will remain between the freeboard evaluation method of performance type II PFDs versus types I and III.

6. Wearer's View from PFD (Section 160.076–25(c)(3)(ii) and –25(c)(4)(ii))

IR Requirement: The IR requirements ensure that the inflated PFD does not unduly interfere with the wearer's ability to see in front and to the sides (''side mark view'') without having to tread water. The UL standard does not address these issues.

Comments: Three comments addressed these provisions. One comment suggested that the side mark view evaluation be performed at 20 feet, rather than the 3 m (10 ft) requirement in the IR, to make it consistent with other standards and regulations which use this type of PFD performance requirement. The Coast Guard notes that the approval requirements for hybrid and commercial inflatable PFDs require that this evaluation occur at 3 m rather than 20 feet (46 CFR Part 160.077 and 160.176). In addition, the comment indicated that the in-water performance evaluation relating to front and side views should only be conducted with the device positioned in its intended wear condition. The comment indicated that if the PFD shifts during water entry it should not be judged a failure for inadequacy of vision; it does not matter if unconscious people have their vision restricted. However, the comment agreed that the remaining in-water requirements (e.g., turns, freeboard, etc.) are applicable to both conscious and unconscious users. In addition, the comment requested that the front mark view requirement not apply to Type III PFDs.

The second comment also discussed the IR requirement that the water surface be visible to the subject when looking to the side. The comment suggested that this only apply to Type I devices and even then not rigidly. The comment added that a relaxed head position without constant visibility of the lowest point on the horizon is not an unsafe condition. Another comment stated that the IR requirement for static measurements of the side mark view, freeboard, and retroreflective material location creates an excessive amount of testing and continues to increase the cost of approval.

Final rule requirements: The Coast Guard is deleting both of the wearer view requirements contained in § 160.076–25(c)(3)(ii) and –25(c)(4)(ii) as these provisions add limited additional safety and may slow inflatable PFDs from being available to boaters.

7. Retroreflective Tape and Light Visibility (Section 160.076–25(c)(3)(iii))

IR Requirement: Any retroreflective tape or light provided on the PFD is required to be visible while worn in the water. The Coast Guard instituted these requirements to ensure that the retroreflective material is effective for search and rescue purposes. The Coast Guard believes that it would be an unnecessary expense and misleading to the user to provide these materials at locations that do not aid search and rescue. The UL 1180 standard does not address these provisions.

Comments: One comment opposed the requirement in § 160.076–25(e)(3)(iii) that requires 75 percent of the reflective material to be above the water line. The comment noted that this type of requirement, and others like it, do not encourage improved performance. Instead, a minimum surface area of reflective material above the water line should be required. The comment added that manufacturers should be encouraged, not discouraged to provide more reflective material.

Final rule requirements. The Coast Guard is deleting the additional requirements relating to retroreflective material above those required in UL 1180. UL practice is to require manufacturers to ensure that the minimum area needed for effective search and rescue is covered with retroreflective material if the device is sold as one that will aid in search and rescue, or if sold for use on commercial vessels. Therefore, the Coat Guard expects that most PFDs with such material tested by UL will meet this requirement.

8. Chamber Material Physical Properties, Production Oversight, Production Tests, and Manufacturer's Records Sections 160.076(b) & (c), -25(d)(2), -29, -31, and -33]

IR Requirement: To set a baseline, the IR requires that tests be conducted on materials taken from prototypes of PFDs tested for approval. There are no pass/fail criteria associated with these tests during approval, but they provide baseline data essential for production quality control limits and for use at a later date if the manufacturer proposes changes in materials. The production oversight and tests established by the IR also cover all the usual elements of a quality control program including the division of production units into lots, running various tests on each lot, establishing and retaining certain records, and establishing criteria for product acceptance and resolution of problems.

Comments on inflation chamber properties: One comment indicated that § 160.076–25(d)(2), which requires testing of inflation chamber properties from the tested prototype PFD, should

be revised to permit PFD manufacturers to bypass the inflation chamber properties tests by using material from the same lot, or equivalent, as that evaluated for the compartment material manufacturer. The comment did not define equivalent, and the Coast Guard knows of no way to determine equivalence other than by testing these physical properties. However, other methods of demonstrating equivalence can be considered.

Another comment opposed this requirement because of the difficulty and questionable value of remaining within close limits of minimum design on all components and assembly parameters in an inflatable PFD used for approval testing. The comment went on to say that production lots of components occasionally dip below the assumed safe level, and that both wide deviations within relatively small lots as well as testing errors on a specific sample are possible. This comment points out the competing demands of economical production and assurance that a produced product is adequately represented by the samples which have been tested for safety during the approval process.

Comments on Lot numbering: One comment indicated that the § 160.076–29(d) requirement to change PFD lot numbers whenever an incoming component lot number changes, would create a hardship for manufacturers. Another comment indicated that changes in lot numbers for component lot changes should only be required for changing lots of fabric and inflation mechanisms. Additionally, one comment noted that the suggestion that PFDs be manufactured in batches and given sequential serial numbers is burdensome and unnecessary. The comment suggested that this method of numbering be an available option, but not a requirement. The Coast Guard notes that the lot numbering requirements in the IR are the same as for other kinds of PFDs and that in the IR providing sequential serial numbers is an option, not a requirement.

Comments on production tests: One comment questioned why § 160.76–29(e)(2) requires two sets of samples for every fifth lot, and indicated that the tests conducted by the inspectors should replace the tests conducted by manufacturers for these lots. The Coast Guard notes that these provisions are the same as for other PFDs and are based on the quality assurance concept of counter checking the primary quality control provider's results.

One comment indicated that § 160.076–29(e)(4) (vi) and (5)(iii) requires testing without regard to production schedules. The Coast Guard notes that these paragraphs are notes to the manufacturer's and inspector's sampling plan tables and thus only apply to testing when there is production in process, as the comment indicated should be the case.

One comment indicated that the seam strength test in § 160.076–31(c)(2) is redundant with the over-pressure and air retention tests. The Coast Guard notes that in fact the latter tests provide no meaningful measure against which production control limits for the material or process can be set because they are simply pass/fail tests and thus cannot be used to monitor or predict developing problems. Seam strength offers a measure that can show trends and thereby indicate when to intervene to prevent problems.

Comments on supervision: One comment indicated that § 160.076–31(d)(3) which requires that the examiner not be supervised by someone who is responsible for meeting production schedules would sometimes initially cause problems in production start-up. The Coast Guard notes that such start-up conflicts are expected and are handled on a case by case basis, by waiving the requirement until the product line is established.

Comments on records retention: One comment questioned why § 160.076–33(a) requires the records for inflatable PFDs to be retained longer than for inherently buoyant PFDs. Another comment questioned why § 160.076–33(b)(4)(ii) requires dates of purchase and receipt of components to be recorded in addition to the component lot number. The comment indicated the lot number provides the necessary tracking information.

Final rule requirements: Performance of approval tests on production inflation chamber materials as required by the IR, avoids the necessity and cost for manufacturers to retest a PFD design in the event of a material change. The results of these types of material tests indicate the level of quality that the materials used in production must achieve to ensure production PFDs are capable of passing the UL 1180 approval tests. The production requirements section of UL 1180 is ''Reserved''. Production oversight is a fundamental component for all approval processes. The IR provisions require essentially the same production oversight as for other kinds of PFDs. Therefore, the Coast Guard is retaining the baseline material and production tests to establish the quality of the fundamental element of an inflatable PFD's ability to provide durable flotation. Under the IR and the final rule, manufacturers are provided the option of qualifying several alternate inflation chamber materials, while still being prevented from unwittingly submitting a ''lab queen'' for initial approval. Inflation chamber material properties as well as production oversight and tests, as with all PFDs, are essential quality control provisions that ensure production units comply with specifications of the tested prototypes.

As to the lot numbering requirements, though the IR requirements are being retained in this final rule the Coast Guard will work with UL and the PFD industry to establish equivalent numbering systems, and if such a requirement is adopted into the UL standard the Coast Guard will delete the requirement for the Coast Guard regulations.

The Coast Guard is retaining the records and recordkeeping provisions in the final rule as published in the IR, because records are an essential element to its oversight responsibilities. The UL standard does not address these provisions. As the Coast Guard gains experience with regulated use and user servicing of inflatables, the Coast Guard believes that long-term records are necessary to allow for tracking of defects during the initial period of approval. Additionally, a more extensive record retention will benefit manufacturers by limiting the scope of any necessary defect notification solely to affected units. Inherently buoyant PFDs have a shorter records retention period than those for inflatables because of their ''self inspecting'' qualities of the PFDs as discussed in the ANPRM. The Coast Guard interprets the subpart lot recordkeeping requirement as being complied with if the component lot number provides the manufacturer with the other required information.

9. Waterproof Marking Durability [Section 160.076–31(c)(8)]

IR Requirement: The IR requires a waterproof marking test that is moderately more stringent than the test required for other kinds of PFDs.

Comments: One comment indicated that § 160.076–31(c)(8), waterproof marking test, should not require elevated temperature and mild detergent since the same is not required for other PFDs.

Final rule requirements: The Coast Guard agrees that all PFD marking should be tested in the same manner, but had established the test in the IR because the impermanence of markings is a common complaint on presently approved PFDs, and because the modified test is no challenge to current technology. However, to avoid excessive differences between this and other Coast

Guard regulations and UL requirements, the waterproof marking requirement in the IR is beign revised in this final rule to make the test consistent with that applicable to other PFDs.

10. Inflator Marking [Sections 160.076–21(f) and −39(d)(1)(ii)]

IR Requirement: The IR requires that both inflators and PFDs be marked with the model number of the inflator used for approval testing.

Comments: PFDMA, the industry association, and one manufacturer acknowledged in comments the need for the Coast Guard to address PFD marking issues as the UL standard does not completely address these concerns.

Final rule requirements: The Coast Guard is retaining the marking requirements in the final rule to aid in enforcement of the serviceability requirements in Title 33 Part 175. Additionally, these provisions are to discourage boaters from switching to less reliable and less capable after-market inflators after purchasing a PFD, and to minimize the possibility of a boater being harmed as a result of an unauthorized modification to an approved PFD. The provision will also help to prevent inadvertent voiding of approval.

11. Adhesive Requirements [Section 160.076–21(d)]

IR Requirement: The IR requires that any adhesive used in the PFD must meet a simple performance standard. The UL standard is not specific in this area.

Final rule requirements: The Coast Guard has decided to drop this restriction from the final rule. Currently, adhesives are not extensively used in most inflatable PFDs produced. The Coast Guard included the requirement in the IR because adhesives have been used in the past and may possibly come into use again. Even without the Coast Guard requirement, if adhesives are used in a PFD submitted for approval, the adhesive will still need to be evaluated for suitability in the intended application according to section 1.4 of UL 1180, which provides general testing standards for components and materials different from the standard.

12. Inflation Discomfort [Section 160.076–23(a)(2)]

IR Requirement: PFDs must not be so uncomfortable during inflation or after inflation so as to cause distress or panic to the user.

Final rule requirements: The Coast Guard is removing this requirement from the final rule. The UL 1180 Standard partially covers this area in section 6.11.4, which requires the PFD to have acceptable comfort up to 90% of the maximum inflation pressure. If after a design is approved, the Coast Guard determines that some boaters are experiencing distress upon inflation, the need for additional requirements in this area will be reevaluated.

13. Textile Cut Edges [Section 160.076–239b)]

IR Requirement: Textile cut edges must be finished to minimize premature unraveling failures. This is a durability and product value issue and not a safety issue.

Final rule requirements: The Coast Guard is removing this requirement from the final rule. As a result, some products will need to be removed from service sooner than if the requirement were in effect; however, a shortened life span should not be catastrophic or life threatening.

14. Pamphlet Requirements [Section 160.076–35]

IR Requirement: An information pamphlet must be provided which is similar in format to that required for inherently buoyant and hybrid PFDs, but which covers the features of inflatable PFDs.

Comments: In comments, PFDMA and three manufacturers acknowledged the need for this information pamphlet section. They provided no specific comments or suggested improvements to the requirements. The UL comments indicate that they expected the Coast Guard to fill in these requirements until the UL standard could be completed. The general consensus of the attendees at the public meeting, discussed above, was support of the approach to the pamphlet published in the IR.

Final rule requirements: All Coast Guard-approved PFDs are required by 33 CFR 181 to be provided with a PFD pamphlet. The UL standard has a section reserved for this item. Without requirements specific to inflatable PFDs in this section, the pamphlet for inherently buoyant PFDs specified in 33 CFR 181 would be required. This result would add no benefit to the public as that pamphlet fails to address inflatable PFDs. Therefore, the Coast Guard is retaining the requirement regarding the information pamphlet in the final rule as published in the IR. Proper selection guidance is critical for a potential inflatable PFD consumer to make an informed purchase decision.

15. Owner's manual [Section 160.076–37 (b)(1), (b)(2), (b)(3), (b)(4), and (b)(5)]

IR Requirement: In addition to the UL 1180 requirements for the type of information to be provided in an owner's manual, the IR requires five additional issues to be addressed: (1) instructions to inform users to partially deflate a PFD to ease climbing out of the water; (2) service life disclosure; (3) warning against misuse that could be hazardous; (4) explanation of the meaning of any approval conditions; and (5) estimate of user's chances of survival if approval conditions are or are not met.

Comments: Several comments addressed this issue. One manufacturer acknowledged the need for the IR's owner's manual section. Two comments indicated that the requirement is § 160.076–37(b)(2), to state the expected service life in owners manual, was not prudent due to enormous diversity of usage conditions. One of these comments went on to say that the components which will be used in the first inflatable PFDs are newly developed to meet the new standard and have no historical data to justify any claims of expected service life. Additionally, a comment from UL indicated that the example in § 160.076–37(b)(3), which requires a warning against wearing a PFD with automatic inflation under restrictive clothing, should be revised to indicate that such a warning be provided with all inflatable PFDs since any inflatable PFD worn under clothing is hazardous.

Final rule requirements: During the development of UL 1180, PFD manufacturers were divided on the service life disclosure issue, and the UL committee could not reach a consensus on the issue. Because the IR provisions requiring additional information to be included in owner's manual add limited additional safety benefits and may delay designs being available to boaters, those provisions are being deleted in the final rule. The UL standard still requires an owner's manual to be included and manufacturers who choose to, can include the material which would have been required by the IR.

16. PFD Markings [Section 160.076–39 (c), (d), and (f)]

IR Requirement: In addition to the UL 1180 marking requirements for PFDs and component materials, the IR requires several additional marking items including information about use on commercial vessels, the approved inflator model, and warnings of foreseeable hazards. Additionally, conditional approval markings are permitted for manufacturers seeking such approval.

Comments; General: The PFDMA acknowledged that, in general, the Coast Guard's marking provisions in the IR

were necessary. The Association provided no specific comments.

Comments; Marking size: There were two comments on the size of the marking required on the inflation handle of a manual inflator. Both comments indicated that smaller marking would be adequate.

Comments; Use on Commercial Vessels: There were two comments on the requirements in § 160.076–39(d)(1)(i) which require markings on an approved PFD to state that the PFDs are ''NOT APPROVED FOR USE ON COMMERCIAL VESSELS.'' Both comments believed that there was a high likelihood that the marking would be misinterpreted as prohibiting use of these recreational inflatable PFDs on commercial vessels. One comment noted that the marking would create the misperception in the minds of many crew members of commercial vessels, that they are not allowed to wear inflatable PFDs. The comment stated that as a result, the marking will be a disservice to thousands of men and women on board commercial vessels. Further, the comment noted, it will greatly diminish the stated objective of getting people to take the preventive measure of actually wearing a PFD and advocated that all inflatable PFDs be marked ''Meets USCG Carriage Requirements Only When Worn.''

The other comment also favored use of the devices on uninspected vessels with certain conditions. This comment stated that for uninspected passenger vessels for hire, there appears to be no basis for allowing inflatable PFDs in lieu of inherently buoyant PFDs unless they are worn by the passengers during the voyage.

Comments; Reliability Disclosure: One of the comments discussed above also requested that inflatable PFDs be marked with their reliability (after five years of typical service), for the consumer's information at the point of sale. The comment indicated that comparative figures for inherently buoyant PFDs should be allowed. The comment also suggested that the inflatable PFD should be marked with an indication of its reliability and effectiveness when worn.

Final rule requirements: Based on the comments the Coast Guard is revising the marking requirements in the final rule to require the PFDs to be marked ''NOT APPROVED TO MEET CARRIAGE REQUIREMENTS ON COMMERCIAL VESSELS.'' This will make it clear that Type I, II, or III inflatable PFDs may be used as additional equipment on uninspected commercial vessels, in the same fashion as most other recreational PFDs. This would allow crew members to use these inflatables in addition to Type V PFDs permitted to be used on these vessels in accordance with their labels. In a future rulemaking the Coast Guard intends to consider revising 46 CFR part 25 to address use of these PFDs to meet certain commercial vessel carriage requirements and to address the associated maintenance responsibilities and perhaps wear requirements as suggested in the comments.

The Coast Guard has decided not to require markings concerning reliability of the PFD on the PFD label as requested because, among other things, it cannot be adequately explained in a brief statement. This information may be addressed in the information pamphlet or the owner's manual. The pamphlet is intended for point of sale information. In this final rule, the Coast Guard is not requiring this information to be provided either on the label or in the owner's manual because the rating would depend on how the PFD is used and cared for or would require the development of a standardized typical service life which is not available at this time.

As to the other comments on marking requirements in § 160.076–39, the Coast Guard is deleting paragraphs (d)(2) and (f) regarding foreseeable misuse and manual inflation handle marking, as these provisions add limited additional safety and may delay designs being available to boaters.

Editorial Corrections

In addition to the above changes, a number of editorial changes are being made in the final rule to conform the text of the rule to the new organization of the Coast Guard. Additionally, the production test and inspection sampling plan tables in § 160.076–29 are corrected in two areas. The lot size headings are relocated to not confuse them with the number of samples per lot. Also, in the notes to the tables the symbols ''/@'' are replaced with ''§ ''.

Incorporation by Reference

The following material is incorporated by reference in § 160.076–11: Fully Inflatable Recreational Personal Flotation Devices (UL 1180), first edition, May 15, 1995; Components for Personal Flotation Devices (UL 1191), May 16, 1995; Marine Buoyant Devices (UL 1123), February 17, 1995; American Society for Testing and Materials, ASTM D 751–79, Standard Methods of Testing Coated Fabrics, 1979; ASTM D 1434–75, Gas Transmission Rate of Plastic Film and Sheeting, 1975; and Federal Standards, Federal Test Method Standard No. 191A, July 20, 1978. Copies of the material are available for inspection where indicated under ''ADDRESSES.'' Copies of the material are available from the sources listed in § 160.076–11.

The Director of the Federal Register has approved the material in § 160.076–11 for incorporation by reference under 5 U.S.C. 552 and 1 CFR part 51. The material is available as indicated in that section.

Regulatory Evaluation

This rule is not a significant regulatory action under section 3(f) of Executive Order 12866 and does not require an assessment of potential costs and benefits under section 6(a)(3) of that order. It has not been reviewed by the Office of Management and Budget under that order. It is not significant under the regulatory policies and procedures of the Department of Transportation (DOT) (44 FR 11040; February 26, 1979).

A Regulatory Evaluation under paragraph 10e of the DOT regulatory policies and procedures has been prepared and is available in the docket for inspection or copying where indicated under **ADDRESSES.** The Evaluation is summarized as follows.

The requirements of this final rule open up a new marketing opportunity for inflatable PFD manufacturers by allowing them to obtain Coast Guard approval of recreational inflatable PFDs, if they so choose. The final rule will also allow boaters to purchase and use inflatable PFDs on their boats, if they wish to do so. Manufacturers may still make and sell unapproved inflatable PFDs, and boaters may continue to use such PFDs as additional equipment. Manufacturers who wish to obtain approval will have to pay for the approval testing at the recognized laboratory, pay the cost of the required quality control and oversight, and provide the information pamphlet and manuals required by this rule.

The estimated total initial approval cost per inflatable PFD design is expected to be approximately $18,500, excluding the cost of inflation system acceptance which could be amortized over several designs of PFDs. This cost is almost entirely due to tests required by the industry consensus standard, which are not included in the cost imposed by this rule. Costs to approve other types of PFDs are approximately $6,000, excluding component acceptance costs. The additional cost to approve inflatable PFDs could easily be absorbed in the cost of the units produced. The cost increase per device would be small considering the number of devices which could be produced under authorization of each approval

certificate. The Coast Guard anticipates that it will approve 36 inflatable PFD designs within the first 10 years after issuing this rule.

Production inspection costs imposed by these regulations will be approximately $1,000 for the largest size lot of inflatable PFDs permitted. This cost is similar to that incurred for other types of approved PFDs.

The retail cost, per device, is expected to be between $50 and $200 for inflatable PFDs. Currently approved PFDs range in price from $7–$200.

If 500,000 units per year are produced, costs for the requirements imposed over those imposed by the industry consensus standard is estimated to be $618,000 annually to the industry.

Small Entities

Under the Regulatory Flexibility Act (5 U.S.C. 601 *et seq.*), the Coast Guard must consider the economic impact on small entities of a rule for which a general notice of proposed rulemaking is required. ''Small entities'' may include (1) small businesses and not-for-profit organizations that are independently owned and operated and are not dominant in their fields and (2) governmental jurisdictions with populations of less than 50,000.

As the requirements of this final rule open up a new marketing opportunity for inflatable PFD manufacturers by allowing them to obtain Coast Guard approval of recreational inflatable PFDs, a general notice of proposed rulemaking was not required. The Coast Guard has nevertheless reviewed this rule for its potential impact on small entities. The final rule will also allow boaters to purchase and use inflatable PFDs on their boats. As discussed above, the economic impact of the new requirements is expected to be minimal.

Therefore, the Coast Guard certifies that this rule will not have a significant economic impact on a substantial number of small entities.

Collection of Information

This rule contains collection-of-information requirements. The Coast Guard has submitted the requirements to the Office of Management and Budget (OMB) for review under section 3504(h) of the Paperwork Reduction Act (44 U.S.C. 3501 *et seq.*), and OMB has approved them. The section numbers are §§ 160.076–13, 160.076–21, 160.076–29, 160.076–31, 160.076–33, 160.076–35, and 160.076–39 and the OMB approval number is OMB Control Number 2115–0619.

Federalism

The Coast Guard has analyzed this rule under the principles and criteria contained in Executive Order 12612 and has determined that this rule does not have sufficient federalism implications to warrant the preparation of a Federalism Assessment. This rulemaking establishes procedures for Coast Guard approval of inflatable PFDs. The authority to establish these requirements are committed to the Coast Guard by Federal statutes. Furthermore, since PFDs are manufactured and used in the national marketplace, safety standards for PFDs should be national in scope to avoid burdensome variances. Therefore, the Coast Guard intends this rule to preempt State action on the same subject matter.

Environment

The Coast Guard considered the environmental impact of this rule and concluded that under paragraph 2.B.2 of Commandant Instruction M16475.1B, this rule is categorically excluded from further environmental documentation. This rule has no environmental impact other than reducing the volume of unicellular plastic foam being used in inherently buoyant PFDs. A ''Categorical Exclusion Determination'' is available in the docket for inspection or copying where indicated under **ADDRESSES**.

List of Subjects in 46 CFR Part 160

Marine safety, Reporting and recordkeeping requirements, Incorporation by reference.

Accordingly, the interim rule amending 46 CFR part 160, which was published at 60 FR 32836 on June 23, 1995, is adopted as final with the following changes:

PART 160—LIFESAVING EQUIPMENT

1. The authority citation for part 160 is revised to read as follows:

Authority: 46 U.S.C. 2103, 3306, 3703 and 4302; E.O. 12234, 45 FR 58801, 3 CFR, 1980 Comp., p. 277; 49 CFR 1.46.

2. Section 160.076–5 is amended by revising the definition of ''Commandant'', and removing the definition of ''LSI'' to read as follows:

§ 160.076–5 Definitions.

* * * * *

Commandant means the Chief of the Lifesaving and Fire Safety Standards Branch, U.S. Coast Guard Marine Safety and Environmental Protection Directorate. Address: Commandant (G–MMS–4), U.S. Coast Guard Headquarters, 2100 Second St. SW., Washington, DC 20593–0001; phone: 202–267–1444; facsimile: 202–267–1069; electronic mail: ''mvi-3/G-M18@cgsmtp.uscg.mil''.

* * * * *

3. In § 160.076–7, paragraph (a) is revised to read as follows:

§ 160.076–7 PFD approval Type.

(a) An inflatable PFD may be approved without conditions as a Type I, II, or III PFD for persons over 36 kg (80 lb) if it meets the requirements of this subpart.

* * * * *

4. In § 160.076–9, paragraph (b) is revised to read as follows:

§ 160.076–9 Conditional approval.

* * * * *

(b) PFDs not meeting the performance specifications for type I, II, or III PFDs in UL 1180 may be classified as Type V, conditionally approved PFDs, when the Commandant determines that the performance or design characteristics of the PFD make such classification appropriate.

5. In § 160.076–11, paragraph (b) is revised to read as follows:

§ 160.076–11 Incorporation by reference.

* * * * *

(b) The materials approved for incorporation by reference in this subpart, and the sections affected are as follows:

American Society for Testing and Materials (ASTM)

100 Barr Harbor Drive, West Conshohocken, PA 19428–2959.

ASTM D 751–79 Standard Methods of Testing Coated Fabrics, 1979, 160.076–25;

ASTM D 1434–75 Gas Transmission Rate of Plastic Film and Sheeting, 1975, 160.076–25.

Federal Standards

Naval Publishing and Printing Center, Customer Service, 700 Robbins Avenue, Philadelphia, PA 19120.

In Federal Test Method Standard No. 191A (dated July 20, 1978) the following methods:

(1) Method 5100, Strength and Elongation, Breaking of Woven Cloth; Grab Method, 160.076–25;

(2) Method 5132, Strength of Cloth, Tearing; Falling-Pendulum Method, 160.076–25;

(3) Method 5134, Strength of Cloth, Tearing; Tongue Method, 160.076–25.

Underwriters Laboratories (UL)

Underwriters Laboratories, Inc., P.O. Box 13995, Research Triangle Park, NC 27709–3995 (Phone (919) 549–1400; Facsimile: (919) 549–1842)

UL 1123, ''Marine Buoyant Devices'', February 17, 1995, 160.076–35;

UL 1180, ''Fully Inflatable Recreational Personal Flotation Devices'', May 15, 1995, 160.076–7; 160.076–21; 160.076–23; 160.076–25; 160.076–29; 160.076–31; 160.076–37; 160.076–39.

UL 1191, ''Components for Personal Flotation Devices'', May 16, 1995, 160.076–21; 160.076–25; 160.076–39.

§ 160.076–13 [Amended]

6. In § 160.076–13 paragraph (c)(10) is removed.

§ 160.076–21 [Amended]

7. In § 160.076–21 paragraphs (d) and (e) are removed and paragraph (f) is redesignated as paragraph (d).

8. In § 160.076–23, paragraphs (a)(2) and (b) are removed, paragraph (a)(3) is redesignated as (a)(2), and paragraph (a)(1) is revised to read as follows:

§ 160.076–23 Construction and performance requirements.

(a) * * *

(1) Meet the requirements in UL 1180 applicable to the PFD performance type for which approval is sought; and

* * * * *

9. In § 160.076–25, paragraph (c) is revised to read as follows:

§ 160.076–25 Approval testing.

* * * * *

(c) Each test subject participating in the tests in UL 1180, section 6 shall in addition, demonstrate that the test subject can repack the PFD such that it can be used in the donning tests and manual activation tests required by—

(1) Section 6.2.3 of UL 1180; and

(2) Sections 6.4.1, and 6.4.2 of UL 1180, if the test engineer cannot verify that the manual and oral inflators are properly stowed.

* * * * *

§ 160.076–27 [Removed and reserved]

10. § 160.076–27 is removed and reserved.

§ 160.076–29 [Amended]

11. In § 160.076–29, Tables 160.076–29A and 160.076–29B are revised to read as follows:

* * * * *

TABLE 160.076–29A—MANUFACTURER'S SAMPLING PLAN

	Number of Samples Per Lot (Lot size)					
	1–100	101–200	201–300	301–500	501–750	751–1000
Tests:						
Inflation Chamber Materials	See Note (a)					
Seam Strength	1	1	2	2	3	4
Over-pressure (b)(c)	1	2	3	4	6	8
Air Retention	EVERY DEVICE IN THE LOT					
Buoyancy and Inflation Medium Retention	1	2	3	4	6	8
Tensile Strength	See Note (d)					
Detailed Product Examination	2	2	3	4	6	8
Retest Sample Size (b)	.....	.....	13	13	20	20
Final Lot Inspection	EVERY DEVICE IN THE LOT					

Notes to Table.
(a) See § 160.076–29(e)(4)(i).
(b) See § 160.076–29(e)(4)(ii).
(c) See § 160.076–29(e)(4)(iii).
(d) See § 160.076–29(e)(4)(iv).

TABLE 160.076–29B—INSPECTOR'S SAMPLING PLAN

	Number of Samples Per Lot (Lot size)					
	1–100	101–200	201–300	301–500	501–750	751–1000
Tests:						
Over-pressure (a)	1	1	2	2	3	4
Air Retention	1	1	2	2	3	4
Buoyancy & Inflation Medium Retention	1	1	2	2	3	4
Tensile Strength	See Note (b)					
Waterproof marking	See Note (c)					
Detailed Project Examination	1	1	1	2	2	3
Retest Sample Size (a)	10	10	13	13	20	20
Final Lot Inspection	10	15	20	25	27	30

Notes to Table:
(a) See § 160.076–29(e)(5)(i).
(b) See § 160.076–29(e)(5)(ii).
(c) See § 160.076–29(e)(5)(iii).

* * * * *

12. In § 160.076–31, paragraph (c)(8) is revised to read as follows:

§ 160.076–31 Production tests and examinations.

* * * * *

(c) * * *

(8) *Waterproof Marking Test.* Each sample must be completely submerged in fresh water for at least 30 minutes. The sample must then be removed, immediately placed on a hard surface, and the markings vigorously rubbed with the fingers for 15 seconds. If the printing becomes illegible, the sample must be rejected.

* * * * *

13. In § 160.076–37, paragraph (b) is revised to read as follows:

§ 160.076–37 Owner's manual.

* * * * *

(b) *Manual contents.* Each owner's manual must contain the information specified in section 11 of UL 1180, and, if the PFD is conditionally approved, an explanation of the meaning of, and reasons for, the approval conditions.

14. In § 160.076–39, paragraph (d)(2) is removed and reserved, paragraphs (c) and (d)(1)(i) are revised and paragraph (f) is removed to read as follows:

§ 160.076–39 Marking.

* * * * *

(c) A Type V, conditionally approved, inflatable PFD must be marked with the approval conditions specified on the approval certificate.

(d) * * *

(1) * * *

(i) ''NOT APPROVED TO MEET CARRIAGE REQUIREMENTS ON COMMERCIAL VESSELS.''

* * * * *

Dated: March 20, 1996.

J.C. Card,

Rear Admiral, U.S. Coast Guard, Chief, Office of Marine Safety, Security and Environmental Protection.

[FR Doc. 96–7301 Filed 3–27–96; 8:45 am]

BILLING CODE 4910–14–M

federal register

Thursday
March 28, 1996

Part III

Department of Housing and Urban Development

Office of Community Planning and Development; Fiscal Year 1995 Funding Availability for the Early Childhood Development Program; Notice

DEPARTMENT OF HOUSING AND URBAN DEVELOPMENT

[Docket No. FR–3961–N–01]

Office of Community Planning and Development; Fiscal Year 1995 Notice of Funding Availability for the Early Childhood Development Program

AGENCY: Office of Community Planning and Development, HUD.

ACTION: Notice of Funding Availability (NOFA) for Fiscal Year (FY) 1995.

SUMMARY: This NOFA announces the availability of $21 million to assist non-profit organizations in providing early childhood development services for lower-income families who reside in public housing, and for homeless families or those at risk of becoming homeless. In keeping with the Clinton Administration's commitment to create communities of opportunity by providing a coordinated package of programs to highly distressed areas, this competition is limited to non-profit organizations that will provide early childhood development services in or near public housing located in urban and rural Federally-designated Empowerment Zones and Enterprise Communities (EZ/ECs). Funded programs will be linked to and build upon the self-sufficiency activities outlined in EZ/EC communities' strategic plans.

DATES: An original and three copies of the completed application for grant funds must be received in HUD Headquarters prior to 5 p.m. Eastern Time on June 26, 1996.

ADDRESSES: Applications will be accepted at the following address: Processing and Control Unit, Office of Community Planning and Development, Department of Housing and Urban Development, 451 Seventh Street, SW, Room 7251, Washington, DC 20410. ATTN: Childhood Development Program. By 5 p.m. Eastern Time on the deadline date applications will be received at either room 7251 or the South Lobby of the Department of Housing and Urban Development at the above address.

Late applications will be deemed to have been received by the deadline date if postmarked by the United States Postal Service no later than three days prior to the deadline date. Late express delivery items will be deemed to have been received by the deadline date upon submission of documentary evidence that they were placed in transit with the express delivery service no later than the day before the deadline.

FOR FURTHER INFORMATION CONTACT: Elizabeth A. Butler, Office of Economic Development, Office of Community Planning and Development, Department of Housing and Urban Development, Room 7134, 451 Seventh Street, SW, Washington, DC 20410, fax (202) 708–7543. A telecommunications device for hearing or speech impaired persons (TTY) is available at 1–800–877–8339 (Federal Information Relay Service TTY). (Except for the ''800'' number, these are not toll-free telephone numbers.)

SUPPLEMENTARY INFORMATION:

I. Paperwork Reduction Act Statement

The information collection requirements contained in this notice have been submitted to the Office of Management and Budget (OMB) for review under the provisions of the Paperwork Reduction Act of 1995 (44 U.S.C. 3501–3520). An agency may not conduct or sponsor, and a person is not required to respond to, a collection of information unless the collection displays a valid control number. The OMB control number, when assigned, will be announced in the Federal Register.

II. Purpose and Substantive Description

(a) Background

This announcement solicits applications from nonprofit organizations serving Federally-designated urban and rural Enterprise Zones/Empowerment Communities (EZ/ECs). To ensure that grants are provided to the largest number of nonprofit organizations practicable, all applicants are limited to $500,000 per project. The average award per project is expected to be approximately $200,000. These funds are intended to establish childhood development services to facilitate the employability of the parents or guardians of children who are residing in public housing, and to provide early childhood development services to families who are homeless or at risk of becoming homeless.

(b) Program Purpose

This program is designed to determine the extent to which the availability of early childhood development services in or near lower-income housing projects facilitates the employability of the parents or guardians of children who are residing in public housing, and to provide early childhood development services in or near lower-income housing projects to families who are homeless or at risk of becoming homeless. These funds may be used for the operating expenses and/or for minor renovations of child care facilities located in or near public housing developments.

All of these funds will be awarded through a competitive process to nonprofit agencies establishing or expanding child care services in Federally-designated urban and rural EZ/ECs. Any grants awarded must be expended for their appropriate activities within eighteen (18) months of the date of award. This announcement anticipates that a likely use of the grant funds will be to create child care facilities in or near public housing developments or to develop ''wrap-around'' child care services in or near housing developments currently offering programs.

Wrap-around child care services means added hours and days of service will be provided to allow parents the opportunity to retain, train for or seek employment. Proposed wrap-around services must be substantially different from services already provided. Funds from grants awarded under this announcement may only be used to finance the additional hours or days of services.

To the extent the program is designed to serve children who are homeless or at risk of becoming homeless, the services should be coordinated with the community's Continuum of Care system or approach for assisting homeless persons and preventing homelessness.

(c) Definitions

(1) *A person at risk of becoming homeless* means an individual or family who is precariously housed and lacks the resources and support network needed for stable housing.

(2) *Continuum of Care* means a system or approach designed to assist homeless families and individuals and prevent homelessness, involving a community process for coordinating resources and consisting of four basic components:

(i) A system of outreach and assessment for determining the needs and conditions of an individual or family who is homeless, or whether assistance is necessary to prevent an individual from becoming homeless;

(ii) Emergency shelters with appropriate supportive services to help ensure that homeless individuals and families receive adequate emergency shelter and referral to necessary service providers or housing finders;

(iii) Transitional housing with appropriate supportive services to help those homeless individuals and families who are not prepared to make the transition to permanent housing and independent living; and

(iv) Permanent housing, or permanent supportive housing, to help meet the long-term needs of homeless individuals and families.

(3) *Empowerment Zone/Enterprise Community (EZ/EC)* means an urban or rural area so designated by the Secretary of HUD or the Secretary of Agriculture pursuant to sections 1391–1393 of the Omnibus Budget Reconciliation Act of 1993. For purposes of this NOFA, this term shall include Supplemental Empowerment Zones and Enhanced Enterprise Communities, as defined below.

(4) *Supplemental Empowerment Zone/Enhanced Enterprise Community (SEZ/EEC)* means an urban area which was designated by the Secretary of HUD as either a Supplemental Empowerment Zone (SEZ) or an Enhanced Enterprise Community (EEC) and announced as such in the Notice of Designation printed in the Federal Register on February 23, 1995 (60 FR 10018).

(5) *Full-day child care* means provision of child care that permits parents or guardians to work at full-time employment.

(6) *Homeless family* means:

(i) An individual or family who lacks a fixed, regular, and adequate nighttime residence; and

(ii) An individual or family who has a primary nighttime residence that is:

(A) A supervised publicly- or privately-operated shelter designed to provide temporary living accommodations (including welfare hotels, congregate shelters, and transitional housing for the mentally ill);

(B) An institution that provides a temporary residence for individuals intended to be institutionalized; or

(C) A public or private place not designed for, or ordinarily used as, a regular sleeping accommodation for human beings.

(7) *Lower-income families* has the meaning given such term in section 3(b)(2) of the U.S. Housing Act of 1937.

(8) *Lower-income or public housing* has the meanings given such terms in section 3(b)(1) of the U.S. Housing Act of 1937.

(9) *Non-profit organization* means an organization:

(i) That no part of the net earnings of which inures to the benefit of any member, founder, contributor or individual;

(ii) That, in the case of a private nonprofit organization, has a voluntary board;

(iii) That has an accounting system, or has designated a fiscal agent in accordance with requirements established by the Secretary; and

(iv) That practices nondiscrimination in the provision of assistance.

(10) *Public Housing Agency* has the meaning given such term in section 3(b)(2) of the United States Housing Act of 1937.

(d) Available Funds

(1) This announcement solicits applications from non-profit organizations that wish to apply for a portion of the $21 million in grant funds that are available under HUD's Early Childhood Development program. Up to 20 percent of available funds can be awarded to rural EZ/ECs.

(2) The average award per project is expected to be approximately $200,000. Individual grants awarded under this announcement shall not exceed $500,000, in order to ensure that funds are provided to as large a number of EZ/EC communities as possible. An EZ/EC cannot receive more than $1 million. It should be noted that while an applicant may apply for funds to establish or expand services for more than one project, no single project will be funded for more than $500,000. The grants are intended to cover operating expenses or one-time renovation costs and will be funded for a period of eighteen (18) months. HUD reserves the right to fund less than the full amount requested in any application.

(e) Eligible Applicants

Applicants must be non-profit organizations, whose service areas include an EZ/EC, that wish to locate child care facilities in or near public housing developments by:

(1) Establishing one or more full-day child care centers or family day care homes, or

(2) Expanding current part-day centers for EZ/EC residents. Family-based facilities may be in the homes of one or more residents of a public housing development.

(f) Eligible Activities

Awarded funds may only be used for operating expenses and minor renovations of facilities necessary for the provision of childhood development services in or near public housing developments located in EZ/ECS. Funds may not be used for new construction of a facility.

(1) Operating expenses include such expenses as planning and development costs, administration, leasing and/or the purchase of equipment and/or leasing vehicles, maintenance, minor or routine repairs, security, utilities, furnishings, equipment and supplies (including curriculum), insurance, and staff salaries.

(2) Minor renovations include the reconfiguration of space; installation of bathrooms or kitchens; renovations necessary to achieve compliance with physical accessibility standards for persons with disabilities or required to meet State or local licensing and building code standards; landscaping; painting; and lighting. Minor renovations does not include the cost associated with lead-based paint abatement since removal of lead-based paint is funded through another HUD program.

III. Special Requirements

Interested applicants must adhere to the following requirements when developing a proposal:

(a) The program should not propose to serve children of the same ages as those currently being served by existing child care programs in or near the targeted public housing development. This prohibition does not apply to those applicants who propose to extend the hours of child care services provided by a center already located in or near the development.

(b) The appropriate public housing authority must agree to provide, at nominal or no cost, suitable facilities to the grantee for provision of full-day child care services.

(c) The full-day child care services program must serve pre-school and school children to permit parents or guardians to obtain, retain or train for employment.

(d) The full-day child care center must hire qualified staff who have received appropriate training specific to age groups served to carry out activities that support early childhood development.

(e) The full-day child care services program must involve the parents of children benefiting from such program, to the extent practicable, in the classroom.

(f) To the extent practicable, the full-day child care services program must provide opportunities for the employment of residents from the public housing development area, especially elderly residents.

(g) The full-day child care services and facilities must comply with all applicable state and local laws, regulations and ordinances.

IV. Criteria for Review and Evaluation of the Grant Application

The following are the criteria for the review and evaluation of grant applications which HUD will use in selecting grantees:

(a) *Program Quality:* comprehensiveness and effectiveness of

the proposed program. (Maximum: 25 points). The application should describe:

(1) The process by which the full-day child care center or family day care home will become operational within a reasonable period of time. Applicants should include items such as a timetable covering the projected beginning and ending dates of the minor renovations, projected date by which staff will be hired, and projected date for beginning operations.

(2) How families and children who are in need of full-day child care services and who are residents of public housing or are homeless or at risk of becoming homeless will be identified and recruited.

(3) The range of ages and number of children that will be cared for, the adult/child ratios and group sizes by age, the operating hours of the full-day child care, and the cost per child of providing services.

(4) What measures will be taken to ensure the health and safety of children and staff participating in the program.

(5) How quality full-day child care services will continue to be provided at a reasonable cost at the end of the grant period, including an adequate plan for monitoring the quality of programs and services.

(6) The consistency of care delivered to each child by a particular caregiver or caregiver team.

(b) *Capability:* the qualifications, experience, or potential capabilities of the applicant and participating parties (Maximum: 25 points). The application should describe:

(1) The ability and experience of applicant, co-applicants and/or subcontractors to perform functions.

(2) The qualifications of proposed staff, such as a Child Development Associate Credential or similar standard.

(c) *Objectives:* the extent to which the application reflects the purpose of the program. (Maximum: 25 points). The application should describe:

(1) The extent to which the child care services will serve and assist the parents or guardians to seek, retain or train for employment.

(2) The community benefit added by the service.

(3) The public housing development the services will be in or near, including street address and the number of resident children in need of proposed services.

(4) How opportunities for employment will be provided, to the extent practicable, by the program to public housing development residents.

(d) *Coordination and Resources:* partnerships formed with and participation of the community stakeholders. (Maximum: 25 points). The application should describe:

(1) How community stakeholders, including parents and the public housing authority, have worked in partnership in preparing program design and implementation.

(2) The extent to which the services will be coordinated with current supportive services, such as Americorps' VISTA and Foster Grandparent programs or similar initiatives.

(3) If the program will serve children who are homeless or at risk of becoming homeless, how the services will be coordinated with the community's Continuum of Care system or approach.

(4) Other resources; funds, staff, in-kind or other, committed to support the proposed program, including letters of commitment.

(5) Assurances or firm commitments from community sources to continue the project funding beyond the initial funding period.

(e) *EZ/EC Performance:* Progress made by the EZ/EC in the implementation of its strategic plan and benchmark activities. (Maximum: 15 points and two pages). Application should describe achievements made in:

(1) Job creation and business expansion.

(2) Job training and retention.

(3) Advancing self-sufficiency.

(4) Human services delivery.

(5) Youth development.

(6) Other activities supportive of the purpose of this NOFA.

V. Application Process

(a) Nonprofit organizations seeking Childhood Development Program assistance must make a specific request for that assistance, in accordance with this NOFA.

(b) *Timing of Submission.* One original and three copies of applications for assistance are due in HUD Headquarters on or before 5 p.m. Eastern Time on the deadline date. HUD will treat as ineligible applications that are received after that deadline. *Applications may not be sent by facsimile (FAX).*

(c) *Other Submission Requirements.* All pages of the application shall be numbered sequentially. Applications of no more than 22 pages should be submitted on 8.5″ x 11″ paper. In addition to the materials requested in Section IV of this notice, the nonprofit organization shall submit the following:

(1) SF–424, Application for Federal Assistance;

(2) The certification regarding lobbying required under 24 CFR part 87;

(3) Certification of a Drug-Free Workplace, in accordance with the Drug-Free Workplace Act of 1988, and HUD's regulations at 24 CFR part 24, subpart F;

(4) A copy of the organization's IRS ruling providing tax-exempt status under section 501(c) of the IRS Code of 1986, as amended;

(5) Line-item budget;

(6) A written certification stating the project will operate within EZ/EC area; and

(7) A signed statement from the local PHA committing space and/or renovation funds to the establishment/expansion of child care facility.

(d) Each grantee will be required to submit to HUD a progress report, in a form prescribed by HUD, within 90 days after the completion of the project. Each report shall describe the use of the grant funds and include a description and an analysis of the project, the approaches taken, and the level of cooperation among participating parties.

VI. Technical Deficiencies

To the extent permitted by law, HUD may advise the applicant of technical deficiencies in the applications and permit them to be corrected. Due to the requirements of the HUD Reform Act, HUD staff is limited in the assistance it is permitted to provide regarding applications for grants. The assistance and advice that can be provided includes such activities as explaining and responding to questions about program requirements, identification of those parts of an application that need substantive improvement, the dates by which decisions will be made and procedures that are required to be performed to process an application. This term, however, does not include advising the applicant how to make those improvements.

In addition, any information published in the Federal Register and in this NOFA and any information that has been made public through a means other than the Federal Register or NOFA may be discussed.

VII. Other Matters

(a) *Environmental Impact.* A Finding of No Significant Impact with respect to the environment has been made in accordance with HUD regulation at 24 CFR part 50, implementing section 102(2)(C) of the National Environmental Policy Act of 1969 (42 U.S.C. 4332). The Finding of No Significant Impact is available for public inspection and copying between 7:30 am and 5:30 pm weekdays at the Office of the Rules

Docket Clerk, 451 7th St. SW Room 10276, Washington, DC 20410.

(b) *Environmental Review.* Any selected application containing funding for minor renovations is subject to environmental review by HUD and selection of such an application does not imply HUD approval of any particular property for use in the project. HUD will complete an environmental review with respect to particular properties, to the extent required under 24 CFR part 50, prior to execution of the grant agreement. The recipient may not commit HUD or other funds for minor renovations until it receives HUD approval of the property. If an application is funded only for operating expenses, environmental approval by HUD is not required.

(c) *Federalism.* The General Counsel, as the Designated Official under section 6(a) of Executive Order 12612, Federalism, has determined that this NOFA will not have substantial, direct effects on States, on their political subdivisions, or on their relationship with the Federal Governments, or on the distribution of power and responsibilities between them and other levels of governments.

(d) *Family.* The General Counsel, as the Designated Official for Executive Order 12606, The Family, has determined that the policies announced in the NOFA do not have the potential for significant impact on family formation, maintenance and general well-being within the meaning of the Order. No significant change in existing HUD policies and programs will result from issuance of this NOFA, as those policies and programs relate to family concerns.

(e) *Prohibition Against Lobbying.* The use of funds awarded under this NOFA is subject to the disclosure requirements and prohibitions of section 319 of the Department of Interior and Related Agencies Appropriation Act for Fiscal Year 1990 (31 U.S.C. 1351) and the implementing regulations at 24 CFR part 87. These authorities prohibit recipients of Federal contracts, grants, or loans from using appropriated funds for lobbying the Executive or Legislative Branches of the Federal Government in connection with a specific contract, grant, or loan. The prohibition also covers the awarding of contracts, grants, cooperative agreements, or loans unless the recipient has made an acceptable certification regarding lobbying. Under 24 CFR part 87, applicants, recipients, and subrecipients of assistance exceeding $100,000 must certify that no Federal funds have been or will be spent on lobbying activities in connection with the assistance.

(f) *Prohibition Against Advance Disclosure of Funding Decisions.* HUD's regulations implementing section 103 of the HUD Reform Act are codified at 24 CFR part 4 and apply to the funding competition announced today. The requirements of part 4 continue to apply until the announcement of the selection of successful applicants.

HUD employees involved in the review of applications and in the making of funding decisions are restrained by part 4 from providing advance information to any person (other than an authorized employee of HUD) concerning funding decisions, or from otherwise giving any applicant an unfair competitive advantage. Persons who apply for assistance in this competition should confine their inquiries to the subject areas permitted by 24 CFR part 4.

Applicants or employees who have ethics related questions should contact the HUD Office of Ethics (202) 708–3815. (This is not a toll-free number.) For HUD employees who have specific program questions, such as whether subject matter can be discussed with persons outside HUD, the employee should contact the appropriate Field Office Counsel, or Headquarters counsel for the program to which the question pertains.

(g) *Accountability in the Provision of HUD Assistance.* HUD's regulation implementing section 102 of the HUD Reform Act is codified at 24 CFR part 12. Section 102 contains a number of provisions that are designed to ensure greater accountability and integrity in the provision of certain types of assistance administered by HUD. On January 16, 1992 (57 FR 1942), following publication of the final rule, HUD published additional information that gave the public (including applicants for, and recipients of, HUD assistance) further information on the implementation, public access, and disclosure requirements of section 102. The requirements of section 102 are applicable to assistance awarded under this NOFA.

(1) *Documentation and Public Access Requirements.* HUD will ensure documentation and other information regarding each application submitted pursuant to this NOFA are sufficient to indicate the basis upon which assistance was provided or denied. This material, including any letters of support, will be made available for public inspection for a five-year period beginning not less than 30 days after the award of the assistance. Material will be made available in accordance with the Freedom of Information Act (5 U.S.C. 552) and HUD's implementing regulations at 24 CFR part 15. In addition, HUD will include the recipients of assistance pursuant to this NOFA in its Federal Register notice of all recipients of HUD assistance awarded on a competitive basis. (See 24 CFR 12.14 (a) and 12.6 (b), and the notice published in the Federal Register on January 16, 1992 (57 FR 1942) for further information on these requirements.)

(2) *Disclosures.* HUD will make available to the public for five years all applicant disclosure reports (HUD Form 2880) submitted in connection with this NOFA. Update reports (also Form 2880) will be made available along with the applicant disclosure reports, but in no case for a period of less than three years.

Authority: Section 222 of the Housing and Urban-Rural Recovery Act of 1983 and the Departments of Veterans Affairs and Housing and Urban Development and Independent Agencies Appropriations Acts of 1994 and 1995 (P.L. 103–327 and P.L. 103–327, respectively).

Applicant Certifications

To be Signed By The Authorized Representative of the Applicant and Submitted with the Application.

The Applicant hereby assures and certifies that:

A. It meets the criteria for eligible applications defined in the Early Childhood Development NOFA and has the legal authority to apply for Federal assistance and the institutional, managerial and financial capability to ensure proper planning, management and completion of the project described in this application and it shall comply with all applicable Federal and state civil rights and housing laws and implementing regulations as those requirements now exist, or as they may be enacted, promulgated or amended from time to time.

B. It will comply with the requirements of the Fair Housing Act (42 U.S.C. 3601–19) and implementing 24 CFR Part 100, Part 109 and Part 110; Executive Order 11063, as amended (Equal Opportunity in Housing) and implementing 24 CFR 107; Titles II and V of the Americans with Disabilities Act, 42 U.S.C. §§ 12101 et seq.; and Title VI of the Civil Rights Act of 1964 (42 U.S.C. 2000d) (Nondiscrimination in Federally Assisted Programs) and implementing at 24 CFR Part 1, or, for applicants which are Indian Tribes or Indian Housing Authorities, the Indian Civil Rights Act (25 U.S.C. 1201 et seq.).

C. It will comply with the requirements of the Age Discrimination Act of 1975 (42 U.S.C. 6101–07) and implementing 24 CFR 146, and Section 504 of the Rehabilitation Act of 19973

(29 U.S.C. 794) and implementing 24 CFR 8.

D. It will comply with the requirements of Executive Order 11426, as amended (Equal Employment Opportunity) and implementing 41 CFR Part 60 and the requirements of Executive Orders 11625, 12432, and 12138, which state that recipients must make efforts to encourage the use of minority-and women-owned business enterprises in connection with funded activities.

E. It will comply with the requirements of Section 3 of the Housing and Urban Development Act of 1968, (U.S.C. 1701u) (Employment Opportunities for Lower Income Persons in Connection with Assisted Projects); and Section 109 of the Housing and Community Development Act of 1974, 42 U.S.C. 5309.

F. It will comply with the requirements of section 1352, Title 31, U.S.C. and the implementing 24 CFR Part 87, and, if this application is requesting more than $100,000, it certifies that:

(1) No Federally appropriated funds have been paid or will be paid, by or on behalf of the undersigned, to any person for influencing or attempting to influence an officer or employee of any agency, a Member of Congress, an officer or employee of Congress, or an employee of a Member of Congress in connection with the awarding or modification of this grant.

(2) If any funds other than Federally appropriated funds have been paid or will be paid to any person for influencing or attempting to influence any person defined in (1) above in connection with this Federal grant, the undersigned shall complete and submit Standard Form-LLL, ''Disclosure form to Report Lobbying,'' in accordance with its instructions.

(3) The undersigned shall require that the language of this certification be included in the award documents for all subawards at all tiers (including subcontracts, subgrants and contracts under this grant) and that all subrecipients shall certify and disclose accordingly.

Any person who fails to file the required certification shall be subject to a civil penalty of not less than $10,000 and of not more than $100,000 for each such failure. Indian Housing Authorities (IHAs) established by an Indian tribe as a result of the exercise of its sovereign power are excluded from coverage, but IHAs established under state law are not excluded from coverage.

G. It and its principals: (1) are not presently debarred suspended, proposed for debarment, declared ineligible, or voluntarily excluded from covered transactions (see 24 CFR 24,.110) by any Federal department or agency; (2) have not within a three-year period preceding this proposal been convicted of or had a civil judgment rendered against them for commission of embezzlement, theft, forgery, bribery, falsification or destruction of records, making false statements, or receiving stolen property; (3) are not presently indicated for or otherwise criminally or civilly charged by a governmental entity (Federal, State or local) with the commission of any of the offenses enumerated in (2) above; and (4) have not within a three-year period preceding this application had one or more public transactions terminated for cause or default. Where the applicant is unable to certify any of the statements in this certification, such applicant shall attach an explanation behind this page.

_____

Signature of Authorized Certifying Official and Date

_____

Title

_____

Organization

Certification Regarding Drug-Free Workplace Requirements

Instruction for Certification

1. By submitting this application, the applicant is providing certification set out below.

2. The certification set out below is a material representation of fact upon which reliance will be placed if HUD determines to award a grant to the applicant. If it is later determined that the applicant knowingly rendered a false certification, or otherwise violates the requirements of the Drug-Free Workplace Act, HUD, in addition to any other remedies available to the Federal Government, may take action authorized under the Drug-Free Workplace Act.

Certification Regarding Drug-Free Workplace Requirements

A. The applicant certifies that it will provide drug-free workplace by:

(a) publishing a statement notifying employees that the unlawful manufacture, distribution, dispensing, possession, or use of a controlled substance is prohibited in the grantee's workplace and specifying the actions that will be taken against employees for violation of such prohibition;

(b) establishing an ongoing drug-free awareness program to inform employees about:

(1) the dangers of drug abuse in the workplace;

(2) the grantee's policy of maintaining a drug-free workplace;

(3) any available drug counseling, rehabilitation, and employee assistance programs; and

(4) the penalties that may be imposed upon employees for drug abuse violations occurring in the workplace;

(c) making it a requirement that each employee to be engaged in the performance of the grant be given a copy of the statement required by paragraph (a);

(d) notifying the employee in the statement required by paragraph (a) that, as a condition of employment under the grant, the employee will:

(1) abide by the terms of the statement; and

(2) notify the employer of any criminal drug statute conviction for the violation occurring in the workplace no later than five days after such conviction:

(e) notifying HUD within ten days after receiving notice under subparagraph (d)(2) from an employee or otherwise receiving actual notice of such conviction.

(f) taking one of the following actions, within 30 days of receiving notice under subparagraph (d)(2), with respect to any employee who is so convicted:

(1) taking appropriate personnel action against such an employee, up to an including termination; or

(2) requiring such employee to participate satisfactorily in a drug abuse assistance or rehabilitation program approved for such purposes by a Federal, State or local health, law enforcement or other appropriate agency;

(g) making a good faith effort to continue to maintain a drug-free workplace through implementation of paragraphs (a) through (f) above.

B. The applicant shall insert in the space provided below the site(s) for the performance of work done in connection with the specific grant.

_____

Place of Performance (street address, city, state and zip code)

_____

Signature of Authorized Certifying Official and Date

_____

Title

_____

Organization

Dated: March 12, 1996.

Andrew Cuomo,

Assistant Secretary for Community Planning and Development.

[FR Doc. 96–7490 Filed 3–27–96; 8:45 am]

BILLING CODE 4210–29–P

federal register

Thursday
March 28, 1996

Part IV

Securities and Exchange Commission

17 CFR Part 230, et al.

Revisions to Rules Regulating Money Market Funds; Final Rule

SECURITIES AND EXCHANGE COMMISSION

17 CFR Parts 230, 239, 270, and 274

[Release Nos. 33–7275; IC–21837; S7–34–93]

RIN 3235–AE17

Revisions to Rules Regulating Money Market Funds

AGENCY: Securities and Exchange Commission.

ACTION: Final rule.

SUMMARY: The Commission is adopting amendments to rules and forms under the Securities Act of 1933 and the Investment Company Act of 1940 that govern money market funds. The amendments tighten the risk-limiting conditions imposed on tax exempt money market funds by rule 2a–7 under the Investment Company Act of 1940; impose additional disclosure requirements on tax exempt funds; and make certain other changes applicable to all money market funds. The amendments are designed to reduce the likelihood that a tax exempt fund will not be able to maintain a stable net asset value.

EFFECTIVE DATE: June 3, 1996. Several different compliance dates apply to the amendments. For specific compliance dates for particular amendments, see Section V. of this Release.

FOR FURTHER INFORMATION CONTACT: Martha H. Platt, Senior Attorney, (202) 942–0725, or Kenneth J. Berman, Assistant Director, Office of Regulatory Policy, (202) 942–0690, Division of Investment Management, Securities and Exchange Commission, 450 Fifth Street, N.W., Washington, D.C. 20549. Requests for formal interpretive advice should be directed to the Office of Chief Counsel (202) 942–0659, Division of Investment Management, 450 Fifth Street, N.W., Washington, D.C. 20549.

SUPPLEMENTARY INFORMATION: The Securities and Exchange Commission (''Commission'') is adopting amendments to rule 2a–7 [17 CFR 270.2a–7] (''rule 2a–7'' or the ''rule'') under the Investment Company Act of 1940 [15 U.S.C. 80a–1 *et seq.*] (''1940 Act''), the rule governing the operations of money market funds (''money funds'' or ''funds'').[1] The Commission is also adopting a new rule, rule 17a–9 under the 1940 Act [17 CFR 270.17a–9], and amendments to the following rules and forms: rule 134 under the Securities Act of 1933 [17 CFR 230.134]; rules 2a41–1, 12d–3 and 31a–1 under the 1940 Act [17 CFR 270.2a–41–1, 270.12d3–1, and 270.31a–1]; Form N–1A [17 CFR 239.15A and 274.11A]; Form N–3 [17 CFR 239.17a and 274.11b]; and Form N–SAR [17 CFR 274.101]. The Commission is also publishing three new or revised staff guides to Forms N–1A and N–3 that do not appear in the Code of Federal Regulations.

Table of Contents

Executive Summary
I. Background
II. Amendments to Rule 2a–7
A. Preliminary Matters
B. Portfolio Quality and Diversification
1. Five Percent Diversification Test
a. Application to Tax Exempt Funds
b. Scope of the Diversification Standards
2. Quality Limitations on Portfolio Securities
a. Proposed Limitations for Single State Funds
b. Application of the Second Tier Securities Tests to Conduit Securities
c. Definition of the Term ''Conduit Security''
C. Diversification and Quality Standards for Put Providers
1. Put Diversification Standards
a. Uniform Diversification Standards for Conditional and Unconditional Puts
b. The Twenty-Five Percent Put Basket
c. Issuer-Provided Demand Features
d. Multiple Puts and Guarantees
2. Quality Standards
a. Rating Requirement for Demand Features
b. Providers of Puts in Excess of Five Percent of Fund Assets
c. Certain Unrated Securities
3. Conditional Demand Features
4. Other Issues Applicable to Put Providers
a. Accrued Interest
b. Notice of Substitution of Put Provider
c. Liquidity Requirements for Money Funds and the Three Business Day Settlement Cycle
5. Short-Term Ratings
D. Other Diversification and Quality Standards
1. Repurchase Agreements
2. Pre-Refunded Bonds
3. Diversification Safe Harbor
4. Three-Day Safe Harbor
E. Asset Backed Securities and Synthetic Securities
1. Background
2. Definitions
3. Diversification Standards
a. Diversification: General
(1) Special Purpose Entity as Issuer
(2) Looking through the Special Purpose Entity
b. Diversification: First Loss Guarantees
4. Quality Standards
5. Maturity Standards
F. Variable and Floating Rate Securities
1. Maturity Determinations: Floating Rate Securities
2. Maturity Determinations: Variable Rate Securities
3. Adjustable Rate Government Securities
4. Other Issues Concerning Adjustable Rate Securities
a. Background
b. Recordkeeping Requirement
G. Other Amendments to Rule 2a–7
1. U.S. Dollar Denominated Instruments
2. Investment in Other Money Funds
3. Board Approval and Reassessment of Certain Securities
4. Recordkeeping
5. Defaulted Securities
6. Technical Amendments
III. Amendments to Disclosure Rules
A. Single State Funds
B. Disclosure Concerning Exposure to Put Providers
C. Risk Disclosure in Certain Communications
IV. Exemptive Rule Governing Purchases of Certain Portfolio Securities By Affiliated Persons
V. Compliance Dates
A. General Compliance Date
B. Grandfathered Securities
C. Disclosure and Reporting
VI. Regulatory Flexibility Analysis
VII. Statutory Authority
VIII. Text of Rule and Form Amendments

Executive Summary

The Commission is adopting amendments to rule 2a–7 under the 1940 Act, the rule that governs the operations of money funds. The primary purpose of the amendments is to tighten the risk-limiting conditions of the rule applicable to tax exempt money funds and thereby reduce the likelihood that a tax exempt fund will not be able to maintain a stable net asset value. The amendments also affect taxable money funds in certain respects. In addition, the Commission is adopting revisions to the prospectus disclosure requirements for tax exempt money funds and a new rule exempting certain transactions from the 1940 Act's limitations on affiliated transactions.

In considering these amendments, the Commission has made changes from the proposal designed to simplify compliance with the rule while retaining the degree of flexibility necessary for money funds to operate in accordance with their investment objectives. A brief summary of the rule amendments is provided below.

Issuer Diversification and Quality Standards

The amendments extend the rule's diversification requirements to tax exempt funds. A ''national'' tax exempt fund is limited to investing no more than five percent of its assets in securities of a single issuer (other than Government securities) (the ''Five Percent Diversification Test''). A ''single state'' tax exempt fund is subject to the same limitation but only with respect to seventy-five percent of its assets; the remaining twenty-five percent of a

[1] Unless otherwise noted, all references to rule 2a–7, as amended, or any paragraph of the rule, will be to 17 CFR 270.2a–7 as amended by this Release.

single state fund's assets (''twenty-five percent basket'') may be invested in securities of one or more issuers, provided that they are ''first tier securities,'' as the term is defined in the rule. A tax exempt fund is limited to investing five percent of its assets in ''second tier securities'' that are ''conduit securities,'' as these terms are defined in the rule, with investment in the conduit securities of any one issuer limited to one percent of fund assets. To provide an additional element of flexibility, a security subject to an ''unconditional demand feature issued by a non-controlled person,'' as defined in the rule, will be subject only to the rule's put diversification requirements.

Diversification and Quality Standards Applicable to Providers of Puts and Demand Features

The amendments provide that a fund cannot, with respect to seventy-five percent of its assets, invest more than ten percent of its assets in securities subject to puts from, or directly issued by, the same institution. The remaining twenty-five percent of a fund's assets (''twenty-five percent put basket'') may be subject to puts from, or directly issued by, one or more institutions, provided that the puts are first tier securities. A fund may not invest more than five percent of its assets in securities subject to puts that are second tier securities.

As proposed, a demand feature is an ''eligible security'' (as defined in the rule) only if the demand feature (or its issuer) has received a short-term rating from a nationally recognized statistical rating organization (''NRSRO''). A conditional demand feature is an eligible security if the limitations on its exercise can be readily monitored by the fund's board of directors (or its delegate). The amendments as adopted, however, do not specify the conditions that may be included in a conditional demand feature.

Asset Backed Securities and ''Synthetic'' Securities

The amendments clarify the credit quality, diversification and maturity determination standards applicable to synthetic and asset backed securities (''ABSs''). Among other things, an ABS must have a rating from a NRSRO to be eligible for fund investment.

Interest Rate Risk Analysis

The amendments also clarify that floating rate and variable rate securities (''adjustable rate securities'') must reasonably be expected to have market values that approximate their amortized cost values on each interest rate adjustment date through their final maturity dates. The amendments require funds to review periodically whether such securities can reasonably be expected to have market values that approximate their amortized cost values upon readjustment of their interest rates.

Exemptive Rule

The Commission is adopting rule 17a–9 under the 1940 Act to permit (but not require) an affiliate of a fund to purchase from the fund securities that are no longer eligible securities at the higher of their amortized cost values (including accrued interest) or market values, without having to obtain a Commission order.

I. Background

Money funds are open-end management investment companies registered under the 1940 Act that have as their investment objective generation of income and preservation of capital and liquidity through investment in short-term, high quality securities. More than $775 billion in assets is currently invested in approximately 25 million money fund shareholder accounts.[2] Approximately sixteen percent of money fund assets ($127 billion) are held by funds that have as their principal objective distribution of income exempt from federal income taxes (''tax exempt funds'').[3] Approximately one third of the assets held by tax exempt funds ($43 billion) are held by funds that seek to distribute income that is also exempt from the income taxes of a specific state or locality (''single state funds'').[4] The balance is held by funds that do not limit their investments to securities exempt from the income taxes of a specific state (''national funds'').

Unlike other investment companies, money funds seek to maintain a stable share price, typically $1.00 per share. This stable share price of $1.00 has encouraged investors to view investments in money funds as an alternative to either bank deposits or checking accounts, even though money funds lack federal deposit insurance, and there is no guarantee that money funds will maintain a stable share price.[5]

To maintain a stable share price, most money funds use the amortized cost method of valuation (''amortized cost method'')[6] or the penny-rounding method of pricing (''penny-rounding method'')[7] permitted by rule 2a–7. The 1940 Act and applicable rules generally require investment companies to calculate current net asset value per share by valuing portfolio instruments at market value or, if market quotations are not readily available, at fair value as determined in good faith by, or under the direction of, the board of directors.[8] Rule 2a–7 exempts money funds from these provisions, but contains conditions designed to minimize the deviation between a fund's stabilized share price and the market value of its portfolio.[9] If the deviation does become significant, the fund may be required to take certain steps to address the

[2] *IBC's Money Fund Report* at 2, Dec. 29, 1995 (''*Money Fund Report*''); *Investment Company Institute Mutual Fund Fact Book* at 58–59 (35th ed. 1995). For a summary of the development of money funds, which were first introduced in the early 1970s, *see* Investment Company Act Rel. No. 17589 (July 17, 1990) [55 FR 30239 (July 25, 1990)] (''Release 17589'') at nn.3–7 and 15–18 and accompanying text.

[3] *Money Fund Report, supra* note 2, at 2.

[4] Single state funds are currently available for sixteen states: Alabama, Arizona, California, Connecticut, Florida, Massachusetts, Michigan, Minnesota, Missouri, New Jersey, New York, North Carolina, Ohio, Pennsylvania, Texas and Virginia. *Id.*

[5] A money fund is required to disclose prominently on the cover page of its prospectus that: (1) the shares of the fund are neither insured nor guaranteed by the U.S. Government; and (2) there can be no assurance that the fund will be able to maintain a stable net asset value of $1.00 per share. *See, e.g.,* Item 1(vi) of Form N–1A. The prescribed legend must appear in money fund sales literature and advertisements as well. *See* paragraph (a) of rule 34b–1 under the 1940 Act, and paragraph (a)(7) of rule 482 under the Securities Act of 1933 (''1933 Act'').

[6] Under the amortized cost method, portfolio securities are valued by reference to their acquisition cost as adjusted for amortization of premium or accretion of discount. Paragraph (a)(1) of rule 2a–7, as amended.

[7] Share price is determined under the penny-rounding method by valuing securities at market value, fair value or amortized cost and rounding the per share net asset value to the nearest cent on a share value of a dollar, as opposed to the nearest one tenth of one cent. Paragraph (a)(15) of rule 2a–7, as amended. *See also* Investment Company Act Rel. No. 13380 (July 11, 1983) [48 FR 32555 (July 18, 1983)] (''Release 13380'') (adopting rule 2a–7) at n.6, and Investment Company Act Rel. No. 12206 (Feb. 1, 1982) [47 FR 5428 (Feb. 5, 1982)] (''Release 12206'') (proposing rule 2a–7) at n.5.

[8] *See* section 2(a)(41) of the 1940 Act [15 U.S.C. 80a–2(a)(41)], together with rules 2a–4 and 22c–1 [17 CFR 270.2a–4 and 270–22c–1]. *See also* Accounting Series Release No. 118 (Dec. 23, 1970 [35 FR 19986 (Dec. 31, 1970)] (board may appoint persons to assist in determination of securities' values).

[9] If shares are sold or redeemed based on a net asset value which has been either understated or overstated in comparison to the amount at which portfolio instruments could have been sold, the interests of either existing shareholders or new investors will be diluted. *See* Investment Trusts and Investment Companies: Hearings on S. 3580 Before a Subcomm. of the Sen. Comm. on Banking and Commerce, 76th Cong., 3d Sess. 136–138, 288 (1940), Report of the Staff of the Division of Investment Management of the Securities and Exchange Commission on the Regulation of Money Market Funds Before the Subcommittee on Financial Institutions of the Senate Committee on Banking, Housing, and Urban Affairs at 9 (Jan. 24, 1980), and Release 17589, *supra* note 2, at n.7.

deviation, including selling and redeeming its shares at less than $1.00 (''breaking a dollar'').[10]

In February 1991, the Commission amended rule 2a–7 (the ''1991 Amendments'')[11] to respond to developments in the commercial paper market since the rule was adopted in 1983.[12] Among other things, the 1991 Amendments permit funds to invest only in ''eligible securities,'' defined generally as securities that are rated in one of the highest two short-term rating categories by the ''requisite NRSROs,''[13] or comparable unrated securities. Taxable funds must further limit their investments in the securities of any one issuer (other than Government securities)[14] to five percent of fund assets (''Five Percent Diversification Test''),[15] and limit fund investment in second tier securities[16] to no more than five percent of fund assets, with investment in the second tier securities of any one issuer being limited to the greater of one percent of fund assets or one million dollars (''Second Tier Securities Tests'').[17]

The 1991 Amendments did not apply the Five Percent Diversification Test and the Second Tier Securities Tests to tax exempt funds.[18] At that time, the Commission concluded that most tax exempt funds could not satisfy these tests without substantially restructuring their portfolios and, perhaps, losing some of their tax advantages.[19] Single state funds were thought to present particular problems because they concentrate their investments in debt securities issued by a single state (or issuers located within that state), making diversification more difficult to achieve. After the adoption of the 1991 Amendments, the Commission closely examined the characteristics of short-term tax exempt securities, the markets in which they trade, and tax exempt fund portfolios to determine what, if any, revisions to rule 2a–7 should be proposed to provide tax exempt fund investors with protections similar to those afforded taxable fund investors by the 1991 Amendments.

The results of the Commission's examination of the tax exempt markets were reflected in amendments to rule 2a–7 that were proposed for comment on December 17, 1993 (''Proposing Release'').[20] A primary objective of the proposed amendments was to tighten the diversification and portfolio quality standards applicable to tax exempt funds to make them more similar to the standards applicable to taxable funds. The proposed diversification and quality standards for tax exempt funds took into account the different investment objectives and portfolio compositions of national funds and single state funds, and would have established different requirements for each type of tax exempt fund.

The Commission received comments on the proposed amendments from seventy-one commenters, including twelve municipal issuers, twenty-two mutual fund complexes, and nine professional and trade associations.[21] The comment letters reflect a wide variety of views on almost every topic discussed in the Proposing Release. A number of commenters, expressing a general concern over the complexity of the rule, urged that the rule's diversification and quality standards for taxable and tax exempt funds be as consistent with each other as practicable so that the rule would not become too complicated.

As part of its evaluation of the proposal, the Commission considered recent events in the markets for municipal securities that had a significant effect on money funds. One such event was the bankruptcy of Orange County, California, a large municipal issuer of short-term taxable and tax exempt notes.[22] At the time of

[10] Paragraphs (c)(6) and (c)(7) of rule 2a–7, as amended.

[11] Investment Company Act Rel. No. 18005 (Feb. 20, 1991) [56 FR 8113 (Feb. 27, 1991)] (''Release 18005''). The 1991 Amendments were proposed in Release 17589, *supra* note 2, and became effective on June 1, 1991.

[12] Before the 1991 Amendments, rule 2a–7 permitted funds to invest in ''high quality'' securities, that is, securities that had received at least the second highest rating from one NRSRO. *See* Release 13380, *supra* note 7, at n.34. In the summer of 1989 and the spring of 1990, several taxable funds held approximately $125 million in defaulted commercial paper issued by Mortgage and Realty Trust or Integrated Resources Inc.; in the fall of 1990 several funds held commercial paper issued by MNC Financial Corp. that was downgraded to below high quality, resulting in a significant decline in its market price. In all three cases, the commercial paper had the second highest rating from one NRSRO when purchased by the funds and thus was eligible for fund investment under rule 2a–7 as then in effect. Shareholders of funds that held these commercial paper issues were not adversely affected, however, because each fund's investment adviser purchased the paper from the funds at amortized cost or principal amount or otherwise agreed to indemnify the fund. *See* Release 17589, *supra* note 2, at n.18 and accompanying text.

[13] ''Requisite NRSROs'' are defined as: (1) any two NRSROs that have issued a rating with respect to an instrument or class of debt obligations of an issuer, or (2) if only one NRSRO has issued a rating with respect to such instrument or issuer at the time the fund purchases or rolls over the security, that NRSRO. Paragraph (a)(19) of rule 2a–7, as amended.

The term ''NRSRO'' is defined in paragraph (a)(14) of rule 2a–7 to have the same meaning as in the Commission's uniform net capital rule [17 CFR 240.15c3–1(c)(2)(vi)(E), (F) and (H)]. The Commission's Division of Market Regulation responds to requests for NRSRO designation through no-action letters. Currently, the Division of Market Regulation has designated six NRSROs: Duff and Phelps, Inc., Fitch Investors Services, Inc., Moody's Investors Service Inc., Standard & Poor's Corp., and two specialized NRSRO's: IBCA Limited and its subsidiary, IBCA Inc., which is recognized as a NRSRO only with respect to its ratings of debt issued by banks, bank holding companies, United Kingdom building societies, broker-dealers and broker-dealers' parent companies, and bank-supported debt, and Thomson BankWatch, Inc., which is recognized as a NRSRO only with respect to ratings for debt issued by banks, bank holding companies, non-bank banks, thrifts, broker-dealers, and broker-dealers' parent companies. In recognition of the expanded use of credit ratings in Commission rules, the Commission solicited comment on the process employed to designate rating agencies as NRSROs and the nature of the Commission's oversight role with respect to NRSROs in a concept release issued in 1994. Exchange Act Rel. No. 34616 (Aug. 31, 1994) [59 FR 46314 (Sept. 7, 1994)].

[14] Under paragraph (a)(13) of rule 2a–7, as amended, the term ''Government Security'' means those securities issued or guaranteed by the United States or its instrumentalities—the definition of that term given in section 2(a)(16) of the 1940 Act [15 U.S.C. 80a–2(a)(16)]. It does not include securities issued or guaranteed by the state governments or instrumentalities. For a discussion of securities issued by government-sponsored enterprises (''GSEs''), *see Joint Report on the Government Securities Market* (Jan. 1992) at p. D–1.

[15] Paragraph (c)(4)(i) of rule 2a–7, as amended. A limited exception is provided for certain securities held for not more than three business days. *See infra* Section II.D.4. of this Release.

[16] A ''second tier security'' is an eligible security that is not a ''first tier security.'' Paragraph (a)(20) of rule 2a–7, as amended. A first tier security is generally a security that is rated by the requisite NRSROs in the highest rating category for short-term debt obligations, and comparable unrated securities. Paragraph (a)(11) of rule 2a–7, as amended.

[17] Paragraph (c)(4)(iv)(A) of rule 2a–7, as amended. The 1991 Amendments also shortened the maximum dollar-weighted portfolio maturity that a fund may maintain from 120 to ninety days, and codified the actions that a fund must take when certain events occur, including defaults and rating downgrades. *See* paragraphs (c)(2) and (c)(5) of rule 2a–7, as amended. The 1991 Amendments also require that the cover page of fund prospectuses and certain fund advertisements and sales literature state prominently that investment in a fund is not guaranteed or insured by the U.S. Government and that there can be no assurance that a fund can maintain a stable net asset value per share. *See* Form N–1A, item 1(a)(vi); Form N–3, item 1(a)(ix); rule 482(a)(7) under the 1933 Act [17 CFR 230.482(a)(7)]; and rule 34b–1 under the 1940 Act [17 CFR 270.34b–1].

[18] Tax exempt funds continue to be subject to a diversification test with respect to puts, as they had been prior to the adoption of the 1991 Amendments. Paragraphs (c)(4)(v) and (c)(4)(vi)(B) of rule 2a–7, as amended.

[19] Release 17589, *supra* note 2, at Section II.6.

[20] Investment Company Act Rel. No. 19959 (Dec. 17, 1993) [58 FR 68585 (Dec. 28, 1993)] at Section I.A.

[21] The comment period for the Proposing Release was extended from April 6, 1994 to May 6, 1994. *See* Investment Company Act Rel. No. 20184 (Mar. 31, 1994) [59 FR 16576 (Apr. 7, 1994)]. The comment letters and a summary of the comments prepared by the Commission staff are included in File No. S7–34–93.

[22] On December 6, 1994, Orange County and investment pools managed by the Orange County treasurer (''Orange County Pools'') filed for protection under chapter 9 of the Federal

Orange County's bankruptcy, a number of taxable and tax exempt funds held notes issued by either Orange County or municipalities that invested in investment pools managed by the Orange County treasurer (''Orange County notes''). While no fund holding Orange County notes has broken a dollar to date (in large part because of actions taken by their advisers to support the funds' share prices) the Orange County bankruptcy reinforced the need to amend rule 2a–7 to address issues unique to tax exempt funds.[23]

II. Amendments to Rule 2a–7

A. Preliminary Matters

The Commission is today adopting the second of two sets of amendments to rule 2a–7 under the 1940 Act designed to tighten the risk-limiting conditions of the rule. These amendments primarily deal with tax exempt funds; they are intended to provide investors in tax exempt money market funds with protections similar to those provided to investors in taxable funds by the 1991 Amendments. The Commission believes that these amendments are necessary to provide greater assurance that tax exempt money market funds meet investors' expectations for safety and convenience by reducing the likelihood that these funds will not be able to maintain a stable net asset value using pricing procedures permitted by rule 2a–7.

The amendments to rule 2a–7 adopted in 1991, while not insulating funds from all events that could threaten their net asset values, appear to have reduced the riskiness of money market funds at a modest cost to money fund investors in terms of reduced yield.[24] The Commission acknowledges that none of its rules can eliminate completely the risk that a money market fund will break a dollar as a result of a decrease in value of one or more of its portfolio securities. Thus, in adopting these amendments, the Commission is prescribing minimum standards designed not to ensure that a fund will not break a dollar, but rather to require the management of funds in a manner consistent with the investment objective of maintaining a stable net asset value.

A money fund's board of directors has oversight responsibility for the sound management of the fund.[25] The fund's adviser is typically delegated responsibility for selecting appropriate investments for the fund. Rule 2a–7 requires that fund investments should be made in accordance with procedures ''reasonably designed'' to maintain a stable net asset value or share price.[26] In addition, investments made in accordance with such procedures should be consistent with maintaining a stable net asset value or share price. Rule 2a–7 provides an analytical framework for fund advisers to follow when making such investment decisions, including decisions regarding new types of securities not specifically addressed by the rule, Commission releases, or staff interpretive letters. As the Commission stated in 1991, that a particular security is technically eligible for fund investment under rule 2a–7 is not itself an adequate basis for an investment in the security.[27] For example, a number of money funds recently invested in certain structured notes that were Government securities on the asserted belief that the provisions of rule 2a–7 dealing with adjustable rate Government securities would permit such an investment. When short-term interest rates increased in early 1994, the values of these securities decreased and many became illiquid.[28] These and other types of losses are more likely to be avoided if a fund has in place, and operates in accordance with, procedures designed to determine whether investment in the security is consistent not only with the technical requirements of rule 2a–7, but with the rule's analytical framework and with the fund's investment objective of maintaining a stable net asset value.

In preparing these rules for adoption, the Commission has weighed carefully the need to provide a similar level of safety for investors in tax exempt and taxable money funds and the need, frequently expressed by fund commenters, to allow tax exempt funds sufficient flexibility to cope with a limited supply of high quality municipal securities. For example, while the amendments adopted today limit all funds to investing not more than five percent of assets in the securities of any one issuer, the amendments limit the application of this standard to only seventy-five percent of single state fund assets and exclude from the diversification requirements for all funds securities subject to certain types of demand features, refunding agreements, and issuer-provided puts.[29]

In response to comment letters, the Commission has simplified the operation of the rule in several respects. Where possible, the same provisions are applied to all types of funds, separate diversification tests for issuers of conditional and unconditional puts have been eliminated, and fund board involvement is no longer required regarding matters with which directors can be expected to have little expertise. Wherever possible, headings and cross-references have been added to the rule to assist a reader in understanding how its provisions interrelate.

B. Portfolio Quality and Diversification

1. Five Percent Diversification Test

a. *Application to Tax Exempt Funds.* As discussed above, taxable funds are subject to the Five Percent Diversification Test, that is, no more than five percent of the total assets of a taxable money fund may be invested in securities of a single issuer. In proposing to extend diversification standards to tax exempt funds, the Commission took into account the differences between national and single state funds. Most national funds elect to meet the diversification requirements of section 5(b)(1) of the 1940 Act,[30] and

---

Bankruptcy Code [11 U.S.C. 901 *et seq.*]. The U.S. Bankruptcy Court for the Central District of California subsequently determined that the Orange County Investment Pools were not eligible to seek protection under chapter 9. *See* ''Orange County, Mired in Investment Mess, Files for Bankruptcy,'' *Wall St. J.*, Dec. 7, 1994 at A1, A6; Michael Utley, ''Judge Rules Pool's Bankruptcy Filing Invalid, But Impact is Mostly Academic,'' *Bond Buyer,* May 26, 1995 at 1, 36.

[23] The Division of Investment Management addressed analogous issues raised by the Orange County bankruptcy in July 1991, when New Jersey regulators seized Mutual Benefit Life Insurance Company (''MBLI''). A number of securities held by tax exempt funds were subject to demand features provided by MBLI. After its seizure by the New Jersey insurance regulators, MBLI could no longer honor its obligations under the terms of the demand features it provided. Advisers to funds holding MBLI-backed securities took various actions to prevent shareholder losses that would have occurred had the funds been required to break a dollar. The advisers either repurchased the MBLI-backed instruments from the funds at their amortized cost or obtained a replacement guarantor.

[24] *See* ''Has the SEC Reduced the Riskiness of Money Market Funds? An Assessment of the Recent Changes to Rule 2a–7,'' S. Collins and P. Mack (Nov. 1993)(study by economists for the Board of Governors of the Federal Reserve System of money fund data indicated decrease in risk and 20 basis point reduction in yields due to 1991 Amendments).

[25] *See* Investment Company Act Rel. No. 13380, *supra* note 7, at nn. 40–42 and accompanying text.

[26] Paragraphs (c)(6)(i) and (c)(7) of rule 2a–7, as amended.

[27] Release 18005, *supra* note 11, at Section II.A.

[28] *See infra* Section II.F.4.a. of this Release.

[29] *See infra* Sections II.B.1.b., II.C.1.c. and II.D.2. of this Release, and paragraphs (c)(4) (i) and (ii), (c)(4)(vi)(A)(*2*) and (c)(4)(vi)(B)(*1*) of rule 2a–7, as amended.

[30] Section 5(b)(1) provides that a diversified investment company may not, with respect to seventy-five percent of its assets, invest more than five percent of its assets in instruments of any one issuer, other than cash, cash items, Government securities (as defined in section 2(a)(16) of the 1940 Act [15 U.S.C. 80a–2(a)(16)]) and securities of other investment companies. The remaining twenty-five percent of its assets (the ''twenty-five percent

Continued

choose not to use the ''twenty-five percent basket'' (the portion of a diversified fund's assets that is not required to be diversified) to invest more than five percent of their assets in a single issuer. Most commenters, including most mutual fund commenters, supported the extension of the Five Percent Diversification Test to national funds, which the Commission is adopting as proposed.[31]

Unlike national funds, many single state funds are not diversified under section 5(b)(1), and could not satisfy the Five Percent Diversification Test because their investment objectives provide them with a much narrower range of high quality investment alternatives.[32] Although the Commission expressed concern about the risks involved in a non-diversified portfolio of a money fund, it was unclear to the Commission that it would be possible for single state funds to satisfy the Five Percent Diversification Test. Accordingly, the proposed amendments would not have required single state funds to comply with any issuer diversification test under the rule. To reduce the risks associated with a non-diversified portfolio, the Commission proposed to limit single state funds to investing in first tier securities, and proposed additional disclosure requirements to inform investors of the risks of an undiversified single state fund.[33] The Commission also asked commenters to consider whether single state funds should be required to satisfy a diversification standard under the rule.[34]

Most commenters supported the exception from the Five Percent Diversification Test for single state funds. Many of these commenters, however, opposed the proposed first tier securities restriction, and asserted that this requirement would exacerbate the supply problem without making funds more safe by forcing single state funds to be less diversified. Other commenters maintained that the rule should mandate some diversification with respect to single state funds, which they asserted present greater risks than other types of money funds. One commenter suggested that single state funds offering securities from ''large'' states should be subject to the same diversification standards as national funds. Another commenter went even further, stating that the rule should impose the diversification standards applicable to national funds to all single state funds. The views of these commenters, as well as the Commission's experience in administering rule 2a–7 since the amendments were proposed, have led the Commission to reconsider its proposal to exempt single state funds entirely from a diversification test.

In proposing the 1991 Amendments, the Commission noted that a fund's ability to maintain a stable net asset value under the rule may be impaired to the extent it invests heavily in one or more issuers that subsequently experience credit problems or default on their securities.[35] The validity of that observation has been proven by many of the incidents of the past two years in which advisers to funds have taken steps to prevent the fund from breaking a dollar as a result of holding a distressed security.[36] In each case, the smaller the position, the less of an effect the distressed security had on the fund.

In the case of the bankruptcy of Orange County, most of the funds holding the notes held a fairly small portion of their assets in Orange County notes.[37] As a result, in some cases, the fund could maintain its share price without any assistance from the fund's adviser; in other cases, the adviser was in a position to take steps to prevent the fund from breaking a dollar only because the fund's Orange County Note position was relatively small. While, as the Commission has stated several times, no adviser is required to guarantee its fund against the possibility of breaking a dollar,[38] experience has demonstrated that diversification may not only limit investment risk, but also may place the fund in a better position to address (or avoid) significant deviation between a fund's market-based and amortized cost values.

The Commission recognizes that single state funds face a limited choice of very high quality issuers in which to invest, and that the number of first tier issuers in several states is especially limited. Application of the Five Percent Diversification Test to one hundred percent of the assets of these funds could force some funds to invest in lower quality issuers than those in which they would otherwise invest. While greater diversification provides an additional measure of safety for investors where there are many issuers to choose from, the Commission is concerned that too stringent a diversification standard could result in a net reduction in safety for certain single state funds. As a result, the Commission has decided to require single state funds to be diversified at the five percent level only as to seventy-five percent of their assets; the remaining twenty-five percent basket may be invested only in the first tier securities of one or more issuers. The availability of the twenty-five percent basket will provide single state funds with the flexibility to retain several positions of over five percent in very high quality investments.[39]

The Commission has decided to exclude from the application of the

basket'') may be invested in any manner. If an investment company invests more than five percent of its assets in a single issuer, the entire investment is placed in the twenty-five percent basket, and then aggregated with other investments that are greater than five percent to determine whether the fund is in compliance with section 5(b)(1). The investment company may not invest more than twenty-five percent of its assets in a single issuer by splitting its investment into two lots between the twenty-five percent basket and the diversified portion of its portfolio. *See* Lybrand, Ross Bros. & Montgomery (Oct. 24, 1941) (pub. avail. Nov. 22, 1991). Section 5(b)(1) also prohibits a diversified fund, with respect to seventy-five percent of its assets, from investing in securities that comprise more than ten percent of the outstanding voting securities of an issuer.

[31] Paragraph (c)(4)(i) of rule 2a–7, as amended.

[32] Proposing Release, *supra* note 20, at Sections II.A. and II.A.2.

[33] Proposed amendments to Form N–1A would have required a single state fund to disclose in its prospectus risks related to lack of diversification. Proposing Release, *supra* note 20, at Section III.A.

[34] Proposing Release, *supra* note 20, at Section II.A.2.

[35] Release 17589, *supra* note 2, at Section II.1.

[36] Transactions of this type occurred within the last two years because funds held either long-term adjustable rate securities whose market values declined when short-term interest rates were increased, or notes issued by Orange County. Twenty-five advisers or related persons purchased adjustable rate securities from their funds at the securities' amortized cost values to avoid any fund shareholder losses. Thirty-eight advisers or related persons either purchased Orange County notes from, or entered into credit support arrangements with their affiliated funds in order to maintain the funds' stable share price of $1.00. These transactions are prohibited by section 17 of the 1940 Act [15 U.S.C. 80a–17] in the absence of a Commission exemption. *See infra* Section IV. of this Release.

[37] The thirty-eight funds that sought and were granted ''no-action'' relief from the Division of Investment Management either to sell the Orange County notes to affiliated persons, or to arrange for affiliated persons to provide some type of credit support for the benefit of the funds, are illustrative. Most of these funds had no more than five percent of their assets invested in notes issued by Orange County, or one of the participants in the Orange County Investment Pools. Within this group, the fund (a single state fund) that had the greatest concentration of its assets in securities issued by a single issuer had 8.7 percent of its assets invested in that issuer.

[38] *See, e.g.*, Release 18005, *supra* note 11, at Section II.H.; Testimony of Arthur Levitt, Chairman, U.S. Securities and Exchange Commission, Concerning Issues Affecting the Mutual Fund Industry Before the Subcommittee on Telecommunications and Finance, Committee on Energy and Commerce, U.S. House of Representatives, 23–25 (Sept. 27, 1994); Testimony of Arthur Levitt, Chairman, U.S. Securities and Exchange Commission, Concerning Municipal Bond and Government Securities Markets Before the Committee on Banking, Housing and Urban Affairs, U.S. Senate, 10–11 (Jan. 5, 1995).

[39] Application of the non-diversified basket will track the comparable provision of section 5(b)(1) of the 1940 Act [15 U.S.C. 80a–5(b)(1)]. *See supra* note 30.

diversification requirement securities that are subject to an unconditional demand feature from a non-controlled person, as defined in the rule.[40] This approach will be applicable to all money funds, not only single state funds. The Commission believes that this approach, described in more detail below, will provide the advantages of diversification while permitting funds sufficient flexibility to respond to the available supply of eligible securities.

b. *Scope of the Diversification Standards.* A large percentage (sixty to seventy percent) of the securities currently held in tax exempt fund portfolios consist of long-term adjustable rate securities that are subject to unconditional demand features.[41] The provider of an unconditional demand feature assumes the credit risks presented by a particular issuer by agreeing to provide principal and interest payments in the event the issuer of the underlying security is unable to do so. Funds generally rely on the credit quality of the issuer of an unconditional demand feature to satisfy the rule's quality standards.[42] In light of this reliance, two commenters questioned the necessity of requiring a fund to satisfy the rule's issuer diversification and quality standards with respect to the issuer of the underlying security.[43]

If a security subject to an unconditional demand feature was in default or otherwise became distressed, a money fund normally would be expected to exercise the demand feature and receive the entire principal amount of the security and any interest payments due or accrued.[44] Thus, lack of diversification in the underlying security may be less important to a money fund's ability to maintain a stable net asset value than the ability to exercise the demand feature. Demand features are subject to a separate diversification requirement under the rule and, thus, excessive reliance on the credit of a single issuer is already addressed by the rule.[45]

Based on these considerations, and in light of the greater flexibility that would be afforded to single state funds, the Commission has decided to amend the rule so that the issuer diversification requirement—for all money funds—excludes securities subject to an ''unconditional demand feature issued by a non-controlled person,'' as defined in the rule.[46] The Commission is limiting this exclusion to securities whose unconditional demand features are issued by non-controlled persons to reduce a fund's exposure to the credit risks presented by a single economic enterprise.[47] Securities subject to other types of puts, including conditional demand features, would continue to be subject to the rule's issuer diversification standard.

2. Quality Limitations on Portfolio Securities

Rule 2a–7 limits both taxable and tax exempt funds to investing only in eligible securities—securities receiving at least the second highest rating from the requisite NRSROs (as defined in the rule) or comparable unrated securities.[48] Taxable funds must comply with the Second Tier Securities Tests—investment in second tier securities is limited to five percent of fund assets, and investment in the second tier securities of any one issuer is limited to the greater of one percent of fund assets or one million dollars. The proposed amendments to the rule would have established different quality standards for national and single state funds.

a. *Proposed Limitations for Single State Funds.* The proposed amendments would have limited single state fund investment to first tier securities. The Commission stated in the Proposing Release that the first tier securities restriction was designed to reduce the additional risks that may accompany lower levels of diversification as a result of the Commission's proposal not to extend the Five Percent Diversification Test to single state funds. As noted above, most fund commenters objected to this limitation. In light of the requirement that single state funds be diversified as to seventy-five percent of their assets,[49] the Commission has decided not to adopt the proposed first tier securities restriction.

b. *Application of the Second Tier Securities Tests to Conduit Securities.* The proposed amendments to the rule would have extended the Second Tier Securities Tests only to national fund investment in ''conduit securities.'' The Proposing Release explained that, in contrast to traditional state and municipal securities, conduit securities are issued to finance non-governmental private projects, such as retirement homes, private hospitals, local housing projects, and industrial development projects, with respect to which the ultimate obligor is not a governmental entity. Conduit securities are not backed by a revenue source from any essential public facility or by the taxing authority of any state or municipality. As a result, the risk of default for conduit securities is significantly higher than it is for traditional state or municipal securities.[50] Therefore, the Commission proposed to treat a national fund's investment in conduit securities no differently than a taxable fund's investment in securities typically issued by a private concern.

Most commenters supported the application of the Second Tier Securities Tests to national fund investment in conduit securities. These commenters generally agreed that this limited application of the Second Tier Securities Tests would allow national funds maximum flexibility to invest in the type of tax exempt securities that present the least risk of default. A smaller group of commenters, however, asserted that the proposed limitation would further limit the supply of eligible securities.[51] Many conduit securities in which money funds invest are subject to unconditional demand features. Because the Second Tier

[40] Paragraphs (c)(4)(i) and (ii) of rule 2a–7, as amended.

[41] Proposing Release, *supra* note 20, at Section I.B.

[42] Paragraph (c)(3)(ii) of rule 2a–7, as amended, permits a fund to rely on the credit quality of the unconditional demand feature in determining whether the underlying security is an eligible security or a first tier security.

[43] The commenters discussed this issue within the context of the rule's put diversification standards. *See infra* Section II.C.2. of this Release.

[44] Paragraph (c)(5)(ii) of rule 2a–7, as amended, requires a money fund to dispose of a defaulted or distressed security (*e.g.*, one that no longer presents minimal credit risks) ''as soon as practicable,'' absent a finding by the board of directors that disposal would not be in the best interests of the fund.

[45] Demand features and other types of puts that enhance underlying securities continue to be subject to the rule's put diversification requirements. *See infra* Section II.C.1. of this Release.

[46] An ''unconditional demand feature issued by a non-controlled person'' is defined in the rule to mean an ''unconditional put'' that is also a ''demand feature issued by a non-controlled person.'' Paragraph (a)(26) of rule 2a–7, as amended. A ''demand feature issued by a non-controlled person'' is defined to mean ''a demand feature issued by a person that, directly or indirectly, does *not* control, and is not controlled by or under common control with the issuer of the security subject to the Demand Feature. *Control* shall mean 'control' as defined in section 2(a)(9) of the Act.'' Paragraph (a)(8) of rule 2a–7, as amended.

[47] Similarly, the twenty-five percent put basket will not be available for puts that do not meet the definition of a put issued by a non-controlled person. *See infra* Section II.C.1.b. of this Release.

[48] *See supra* nn. 12 and 13 and accompanying text and paragraph (a)(19) of rule 2a–7, as amended.

[49] *See supra* Section II.B.1.a. of this Release and paragraph (c)(4)(iii) of rule 2a–7, as amended.

[50] *See Municipal Bond Defaults—The 1980's: A Decade in Review* (J.J. Kenny & Co., Inc. 1993). Bankruptcies and defaults by major municipal issuers, such as Orange County, California, are rare events. Of the approximately 120 municipal bankruptcies since 1979, most have involved small, local governments or special tax districts. *See* ''Banging a Tin Cup With a Silver Spoon,'' *N.Y. Times*, June 4, 1995 at F1.

[51] *See supra* note 29 and accompanying text.

Securities Tests will not be applied to conduit securities with unconditional demand features issued by non-controlled persons, the application of the Second Tier Securities Tests to these securities should have a limited effect on the supply of tax exempt securities.[52]

The Commission has decided to extend the Second Tier Securities Tests to national and single state fund investment in conduit securities. Under amendments to the rule being adopted, the non-governmental entity ultimately responsible for the payment of principal and interest is treated as the issuer of the conduit security for purposes of the rule's issuer diversification requirements.[53] Credit quality determinations for a conduit security must be made by reference to the underlying corporate or project issuer, unless the conduit security is subject to an unconditional demand feature, in which case the conduit security will not be subject to the Second Tier Securities Tests.[54] Credit quality determinations for conduit securities subject to conditional demand features must be made by reference to the provider of the demand feature and the long-term rating of the underlying corporate or project issuer.[55] In addition, for purposes of calculating compliance with the one percent limit on second tier securities of a single issuer, the issuer of the conduit is the corporation or project.[56]

c. *Definition of the Term ''Conduit Security''.* The proposed amendments would have defined the term ''conduit security'' to mean a security issued through a state or territory of the United States, or any political subdivision or instrumentality thereof, which is *not:* (1) payable from the revenues of such governmental unit (''Revenue Clause''); (2) unconditionally guaranteed by such governmental unit; (3) related to a project or facility owned and operated by such governmental unit; or (4) related to a facility leased to and under the control of an industrial or commercial enterprise that is part of a public project owned and under the control of such governmental unit. The definition was intended to exclude securities for which the ultimate obligor is a governmental unit.

Several commenters advised the Commission that portfolio managers would be able to identify conduit securities more readily and without obtaining legal and other expert opinions if the rule affirmatively stated what a conduit security is, instead of what it is not. Several commenters also urged that the Revenue Clause be deleted because it might result in excluding from the Second Tier Securities Tests a security for which the ultimate obligor is a private entity.[57] The Commission has modified the definition of the term ''conduit security'' to reflect some of these concerns.[58]

The term ''conduit security'' is defined as a security issued by a municipal issuer involving an arrangement or agreement entered into, directly or indirectly, with an issuer other than a municipal issuer, which arrangement or agreement provides for or secures repayment of the security.[59] The term ''conduit security'' does not include a security that is: (1) unconditionally guaranteed by a municipal issuer; (2) payable from the general revenues of the municipal issuer (other than revenues derived from an agreement or arrangement with a person who is not a municipal issuer that provides for or secures repayment of the security); (3) related to a project owned and operated by a municipal issuer; or (4) related to a facility leased to and under the control of an industrial or commercial enterprise that is part of a public project which, as a whole, is owned and under the control of a municipal issuer.[60]

C. Diversification and Quality Standards for Put Providers

A substantial portion of securities held by tax exempt funds are subject to puts and demand features.[61] A ''put'' is the right to sell a specified underlying security within a specified period of time and at a specified exercise price that may be sold, transferred, or assigned only with the underlying security.[62] A demand feature is a put that may be exercised at specified intervals not exceeding 397 calendar days and upon no more than thirty days' notice.[63] Demand features can serve three different purposes: (1) to shorten the maturity of a variable or floating rate security;[64] (2) to enhance the security's credit quality; and (3) to provide liquidity support for the security. If the demand feature can be exercised on seven days' notice, then the security will be treated as a liquid security under the appropriate guidelines.[65]

Demand features may be conditional or unconditional.[66] Under rule 2a–7, a demand feature used as a substitute for

[52] As adopted, the rule exempts from the Second Tier Securities Tests any conduit security subject to an unconditional demand feature issued by a non-controlled person, whether the demand feature is first or second tier. Paragraph (c)(4)(iv)(B) of rule 2a–7, as amended.

[53] Paragraph (c)(4)(vi)(A)(3) of rule 2a–7, as amended.

[54] Paragraph (c)(4)(iv)(B) of rule 2a–7, as amended.

[55] *See infra* Section II.B.2.b. of this Release and paragraph (c)(3)(iii) of rule 2a–7, as amended.

[56] *See* paragraph (c)(4)(vi)(A)(3) of rule 2a–7, as amended. For example, a municipal security issued to finance a private hospital that meets the definition of a conduit security would be considered—for diversification purposes—to have been issued by the hospital, not the municipality.

[57] For example, a governmental unit could issue bonds on behalf of a private firm for the purpose of raising funds to construct facilities for a company, such as a plant or a residential real estate project. The payment of principal or interest on the bonds would be secured through a lease arrangement under which the private firm makes periodic payments to the governmental unit. If these payments were characterized as ''revenue,'' then the bonds issued by the governmental unit would not be treated as conduit securities under the proposed definition.

[58] In the Proposing Release, the Commission asked commenters whether the rule's definition of a conduit security should reference the provisions of the Internal Revenue Code (''IRC'') governing the treatment of private activity bonds, IRC sections 141–174 [26 U.S.C. 141–147]. Most commenters discussing the definition of a conduit security strongly opposed this approach, generally observing that it would have the effect of treating certain general obligation bonds, and bonds issued to finance property owned by a governmental unit, as conduit securities that are subject to the Second Tier Securities Tests, which would be inconsistent with the Commission's objective of subjecting only obligations of non-governmental issuers to the Second Tier Securities Tests. The Commission has decided not to reference the IRC's private activity bond rules in defining the term ''conduit security.''

[59] Paragraph (a)(6) of rule 2a–7, as amended. The rule amendments, as adopted, define the term ''municipal issuer'' to mean a state or territory of the United States, or any political subdivision or instrumentality thereof. The term ''state'' is defined in the 1940 Act to mean any state, the District of Columbia, Puerto Rico, the Virgin Islands, or any other possession of the United States [15 U.S.C. 80a–2(a)(39)].

[60] Paragraph (a)(6) of rule 2a–7, as amended.

[61] Proposing Release, *supra* note 20, at Section I.B.

[62] Paragraph (a)(16) of rule 2a–7, as amended.

[63] Paragraph (a)(7) of rule 2a–7, as amended.

[64] Paragraphs (d)(3) and (d)(5) of rule 2a–7, as amended. Initially, rule 2a–7 provided that only demand features that ran to the issuer of the security could be used to shorten maturities. *See* Release 13380, *supra* note 7, at n.9. This was changed by the amendments to rule 2a–7 adopted in 1986. Investment Company Act Rel. No. 14983 (Mar. 12, 1986) [51 FR 9773 (Mar. 21, 1986)] (''Release 14983'').

[65] A money fund is limited to investing no more than ten percent of its assets in illiquid securities. *See* Release 13380, *supra* note 7, at nn.37–38 and accompanying text. *See also* Investment Company Institute (pub. avail. Dec. 9, 1992). The Division of Investment Management has provided guidance concerning the implementation of three business days as the standard settlement period for trades effected by brokers and dealers, and a fund's determination of whether securities it holds should be deemed liquid for purposes of complying with the ten percent restriction. Letter from Jack W. Murphy, Associate Director and Chief Counsel, Division of Investment Management, to Paul Schott Stevens, General Counsel, Investment Company Institute (May 26, 1995) (''T+3 Letter'').

[66] Both conditional and unconditional puts may operate as demand features to shorten the maturities of adjustable rate securities. As discussed in Section II.C.3. of this Release, *infra,* amendments to rule 2a–7 limit the types of conditions to which exercise of a demand feature can be subject. Paragraph (c)(3)(iii)(B) of rule 2a–7, as amended.

the credit quality of the underlying security must be an ''unconditional put,'' defined to include any guarantee, letter of credit (''LOC'') or similar unconditional credit enhancement that by its terms would be readily exercisable in the event of a default in payment of principal or interest on the underlying security.[67] A demand feature that is not an ''unconditional put'' may serve as the basis for determining whether a security is an eligible security and categorizing it as a first or second tier security; however, the long-term credit quality of the security subject to a conditional demand feature must also be analyzed.[68]

The Commission is adopting several amendments to the provisions of the rule relating to puts and demand features.

1. Put Diversification Standards

Under rule 2a–7, a taxable money fund may not invest more than five percent of its assets in securities subject to conditional puts from, or securities directly issued by, the same institution. The percentage limitation applicable to unconditional puts is ten percent. A tax exempt fund is required to comply with these two requirements with respect to seventy-five percent of its assets; there is no diversification requirement with respect to the remaining twenty-five percent (''twenty-five percent put basket''). The Commission proposed to apply a uniform ten percent limitation on all puts issued by the same institution and to eliminate the twenty-five percent put basket for tax exempt funds.[69]

a. *Uniform Diversification Standards for Conditional and Unconditional Puts.* Under the proposed amendments, a fund could not have invested more than ten percent of its assets in securities subject to conditional and unconditional puts, and securities directly issued by, the same issuer. A fund would have been required to aggregate conditional and unconditional puts issued by the same issuer in applying the ten percent restriction. Most of the commenters who addressed these aspects of the proposal supported the aggregation of conditional and unconditional puts in applying a uniform percentage restriction. Other commenters disagreed, either urging that the ten percent limit be raised or that the rule's put diversification standards continue to distinguish between puts that provide liquidity support (conditional puts) and puts that provide credit support (unconditional puts).

The Commission has decided to adopt the uniform ten percent limitation as proposed, and eliminate the current distinction between conditional and unconditional puts under the rule's put diversification standards.[70] Although there are differences between the risks incurred by the put provider and the nature of the reliance by the investor in each case, the Commission does not believe that these differences are significant enough to warrant continued disparate treatment under the rule. Moreover, aggregating conditional and unconditional puts and applying a single put diversification standard to the aggregate number should simplify compliance with the rule.

b. *The Twenty-Five Percent Put Basket.* The proposed amendments to the rule would have eliminated the twenty-five percent put basket so that a tax exempt fund would have been required to meet the rule's put diversification standards with respect to one hundred percent of its assets. The Commission explained that extensive reliance on a single put provider or a few providers could present considerable risks, particularly for a single state fund which, under the amendments as proposed, would not have been required to be diversified with respect to underlying securities.[71]

Most commenters urged the Commission to retain the twenty-five percent put basket in some form. Many concluded that eliminating the twenty-five percent put basket would increase reliance by funds on less creditworthy put providers and decrease the flexibility currently afforded funds in enhancing the credit quality and liquidity of securities. The commenters disagreed with the Commission's assumption that one probable effect of the elimination of the twenty-five percent put basket would be new entrants to the market as put providers.

A number of commenters suggested that, in light of the Commission's proposal to require that when a fund invests more than five percent of its assets in securities subject to puts from a single put provider, the puts be first tier securities,[72] it would be appropriate to retain the twenty-five percent put basket. The Commission has decided to incorporate this approach in amendments to the rule's put diversification standards.

The amendments provide that the twenty-five percent put basket is available to all money funds for first tier puts, but only if the put is a ''put issued by a non-controlled person''—a put issued by a person that does not directly or indirectly control, and is not controlled by or under common control with the issuer of the security subject to the put.[73] The Commission is restricting fund use of the twenty-five percent put basket to non-controlled persons to minimize a fund's concentration of assets in a single economic enterprise.

c. *Issuer-Provided Demand Features.* The put diversification standards under rule 2a–7 apply to ''securities issued by or subject to Puts from the institution that issued the Put.'' [74] In the Proposing Release, the Commission requested comment on the treatment of puts by the issuer of the underlying securities (''issuer-provided demand features'').[75] Some commenters asserted that funds should be permitted to exclude issuer-provided demand features from the put diversification requirements because issuer-provided demand features can be viewed as the functional equivalent of short-term securities that are ''rolled over'' periodically. The commenters also suggested that including issuer-provided demand features as puts in determining compliance with the rule's put diversification standards amounts to ''double counting.'' The Commission agrees and has added language to the rule to clarify that a fund is not required to aggregate an issuer-provided put with the security subject to the put for purpose of determining compliance with the put diversification requirement of the rule.[76]

[67] Paragraph (a)(27) of rule 2a–7, as amended.

[68] Paragraph (c)(3)(iii)(B) of rule 2a–7, as amended.

[69] *See* Proposing Release, *supra* note 20, at Section II.C.2.

[70] Paragraph (c)(4)(v)(B) of rule 2a–7, as amended.

[71] Proposing Release, *supra* note 20, at Section II.C.2.b.

[72] *See infra* Section II.C.2.b. of this Release.

[73] Paragraphs (a)(17) (definition of ''put issued by a non-controlled person'') and (c)(4)(v) of rule 2a–7, as amended. The Commission is adopting amendments that limit fund investment in puts that are second tier securities to five percent of fund assets. *See infra* Section II.C.2.b. of this Release and paragraph (c)(4)(v)(B) of rule 2a–7, as amended. Further, a fund that has invested more than ten percent of its assets in securities subject to puts and in securities directly issued by a single issuer must count the total amount invested towards the twenty-five percent undiversified put basket. In other words, a fund may not use all or a portion of its twenty-five percent put basket and an additional amount of its diversified assets to invest more than twenty-five percent of its assets in a single issuer. *See supra,* note 30.

[74] Paragraph (c)(4)(v)(A) of rule 2a–7, as amended.

[75] *See* Proposing Release, *supra* note 20, at Section II.C.2.d.(3). The Commission noted that rule 2a–7, as originally adopted, provided that only issuer-provided demand features could be used to shorten the maturity of a security. *See* Release 13380, *supra* note 7, at n.10 and accompanying text.

[76] Paragraph (c)(4)(vi)(B)(*1*) of rule 2a–7, as amended. Under this paragraph, a put issued by the same institution that issued the underlying security

Continued

d. *Multiple Puts and Guarantees.* The proposed amendments would have amended rule 2a–7's put diversification standards to address how put diversification calculations should be made when a security is subject to several puts (''multiple puts''). Under the proposed amendments, different calculation methods would have been applied when: (i) each multiple put provider had contractually agreed to guarantee only a portion of the total principal value of the underlying security (''fractional puts''), and (ii) each multiple put provider had an obligation that was not limited contractually (''layered puts''). The proposed amendments would have clarified that an institution that provides a fractional put would be treated as guaranteeing only that portion of the principal value of the security that it contractually agreed to provide.[77] An institution providing a layered put would have been deemed to cover the entire principal amount of the security, notwithstanding that the security is subject to puts from other institutions.

Most commenters who discussed these issues supported the proposed treatment of fractional puts. These commenters stated that it was appropriate to allocate exposure among put providers for diversification purposes in accordance with the put providers' contractual obligations. The Commission has decided to adopt these amendments to the rule as proposed.[78]

Most commenters opposed treating each put provider in a layered put structure as the guarantor of the entire amount guaranteed because, they argued, the approach ignored the fact that the fund may be relying only on the guarantee of one of the put providers. The Commission has decided to adopt amendments to the rule that reflect these comments. For a security subject to layered puts, the rule permits a fund that is not relying on a particular put for satisfaction of the rule's credit quality[79] or maturity standards,[80] or for liquidity, to exclude that put when determining its compliance with the rule's put diversification standards.[81] The fund must document this determination in its records.[82]

In the context of describing the proposed amendments regarding treatment of multiple puts under the rule's diversification standards, the Commission indicated that bond insurance was a type of put under rule 2a–7.[83] A number of commenters disagreed with this analysis of bond insurance, arguing that bond insurance does not provide liquidity and is not viewed by the market as a substitute for the credit of the underlying issuer. Because bond insurance guarantees the timely payment of principal and interest by the insured issuer,[84] it meets the rule's definition of an unconditional put, permitting credit substitution in the eligibility determination. The Commission has amended the rule to clarify this matter.[85]

The Commission recognizes, however, that bond insurance may not be relied upon by a fund when determining a security's eligibility under the rule. One commenter argued that, in the case of a security subject to a guarantee, such as bond insurance, and a demand feature, the fund is very likely to look only to the issuer of the demand feature if it needs to sell the security and thus, as a practical matter, to the issuer of the demand feature for credit support. Therefore, this commenter concluded, the guarantee should not be counted for purposes of rule 2a–7's diversification requirements. The Commission agrees, and has amended the rule to permit a fund holding a security subject to a put (including bond insurance) and an unconditional demand feature to count only the demand feature for purposes of the put diversification calculation.[86] A fund relying on this provision of the rule is not required to maintain contemporaneous records of its determination that the fund is not relying on the guarantee to determine credit quality.

2. Quality Standards

a. *Rating Requirement for Demand Features.* The proposed amendments to the rule would have limited funds to investing in demand features (other than standby commitments) that are rated, or provided by institutions that are rated, by NRSROs. Most commenters discussing this issue opposed the proposed rating requirement for demand features and suggested that the rule should permit a fund to purchase a security subject to an unrated demand feature if it can make a comparability determination similar to the determination permitted under the rule in connection with the purchase of unrated securities.[87] Other commenters asserted that the fund manager's obligation under the rule to determine that all portfolio securities present minimal credit risk obviated the need for the proposed rating requirement.[88]

The Commission explained in the Proposing Release that NRSRO ratings assigned to demand features or the issuer of demand features may provide additional protection by ensuring input into the minimal credit risk determination by an outside source. This extra source of protection may be particularly important in light of the

would not be subject to the rule's put diversification requirements, and would be subject only to the rule's issuer diversification requirements. For example, a security representing four percent of a fund's total assets that had an issuer-provided demand feature would be treated as a four percent position in ''securities issued by or subject to Puts from the institution that issued the Put,'' not eight percent [quoting paragraph (c)(4)(iv)(A) of rule 2a–7, as amended].

[77] For example, if two banks issued puts on the same VRDN and each agreed to absorb fifty percent of the losses, then each would be deemed to guarantee no more than fifty percent of the VRDN under the rule's put diversification standards.

[78] Paragraph (c)(4)(vi)(B)(*2*) of rule 2a–7, as amended.

[79] Under the rule, a fund holding a security that is subject to an unconditional demand feature may satisfy the rule's credit quality standards with respect to the underlying security based solely on the short-term rating of the demand feature provider. Paragraph (c)(3)(ii) of rule 2a–7, as amended.

[80] Rule 2a–7 generally permits a fund to measure the maturity of an adjustable rate security subject to a demand feature by reference to the date on which principal can be recovered through demand. *See infra* Sections II.F.1. and II.F.2. of this Release and paragraphs (d)(3) and (d)(5) of rule 2a–7, as amended.

[81] Paragraph (c)(4)(vi)(B)(*4*) of rule 2a–7, as amended. This paragraph of the rule also permits a fund holding a security subject to a single put that it is not relying on to satisfy the rule's credit quality or maturity standards, or for liquidity, to disregard that put in determining its compliance with the rule's put diversification standards. If a fund is relying on separate puts for each of these purposes (*e.g.*, a conditional demand feature for purposes of liquidity and maturity, and an unconditional put for purposes of credit quality), then each put would have to satisfy the rule's put diversification standards.

[82] Paragraphs (c)(8)(ii) and (c)(9)(vi) of rule 2a–7, as amended. A fund would document this determination when it acquires the security. The fund may subsequently determine that it is or is not relying on a particular put, but must reflect the change in its written records.

[83] Proposing Release, *supra* note 20, at note 81.

[84] Eli Nathans, *Municipal Bond Insurance—The Economics of the Market*, 13 Mun. Fin. J., No.2 (Summer 1992) 1, 2.

[85] Paragraph (a)(27) of rule 2a–7, as amended. A bond insurance policy that permits the holder of the security to receive all principal and interest payments at the time of the default of the insured obligation would also be an unconditional demand feature. By contrast, a policy under which the fund would only receive periodic payments of principal and interest as those payments came due under the terms of the insured obligation would be an unconditional put, but not an unconditional demand feature.

[86] Paragraph (c)(4)(vi)(B)(*3*) of rule 2a–7, as amended.

[87] Paragraph (a)(9)(iii) of rule 2a–7, as amended, permits a fund to treat an unrated security as an eligible security if the fund's board of directors determines that the unrated security is of comparable quality to a rated security.

[88] Paragraph (c)(3) of rule 2a–7, as amended, limits fund investment to securities that its ''board of directors determines present minimal credit risks.'' This determination must be based on factors pertaining to credit quality ''in addition to any rating assigned to such securities by an NRSRO'' (emphasis added).

Commission's decision to preserve the twenty-five percent diversification basket for put providers, and to eliminate the applicability of rule 2a–7's diversification requirements to securities subject to certain unconditional demand features.[89] In addition, funds may have limited ability to monitor the credit quality of some demand feature providers, such as foreign banks.[90] The Commission is adopting the rating requirement for demand features as proposed.[91]

b. *Providers of Puts in Excess of Five Percent of Fund Assets.* The proposed amendments would have prohibited a money fund from investing more than five percent of its assets in securities subject to a put from a single put provider that is not a first tier put. Compliance with this provision would be measured at the time the put was acquired by the fund. All the commenters discussing this aspect of the proposal agreed that it is appropriate to limit fund investment in puts that are not first tier securities (''second tier puts''), and the Commission is adopting the limit as proposed.[92]

If more than five percent of a fund's assets were subject to a demand feature from a single institution that was no longer a first tier put, the proposed amendments also would have required the fund to reduce the amount of the securities subject to the demand feature to not more than five percent of the fund's assets by exercising the demand feature at the next succeeding exercise date. Most commenters were critical of this proposed requirement and suggested that it might be in the best interests of fund shareholders for the fund either to retain the securities subject to the demand features or dispose of the securities in an orderly manner. Because there may be some circumstances during which it may be in the best interest of the fund to continue to hold the securities subject to the put, the Commission is adopting the amendment with the express provision that a fund's board of directors may determine that disposal of the securities is not in the best interest of the fund, and determine to permit the fund to continue to hold the securities.[93]

c. *Certain Unrated Securities.* Rule 2a–7 currently provides that an unrated security that, when issued, was a long-term security but when purchased by the fund has a remaining maturity of less than 397 calendar days may be considered to be an eligible security based on whether the security is comparable in quality to a rated security, unless the security has received a long-term rating from any NRSRO that is not within the two highest categories of long-term ratings. Under this provision, a long-term rating from an NRSRO below the top two rating categories results in the security becoming ineligible for investment by a money market fund. One commenter stated that, because many issuers with long-term ratings in the third highest ratings categories have first tier short-term ratings, the rule was unnecessarily restrictive. The Commission agrees, and has expanded this provision to accommodate long-term ratings within the top three ratings categories.[94] Funds will continue to be required to determine that such a security is of ''comparable quality'' to rated eligible securities.[95]

3. Conditional Demand Features

Rule 2a–7 does not currently restrict the types of conditions to which a demand feature may be subject. The inability of a fund to exercise a demand feature because of the occurrence of a condition precluding exercise would likely result in violations of the maturity limitations of rule 2a–7, the liquidity requirements of the 1940 Act,[96] and a loss of value of the underlying security, when, for example, a short-term security paying interest at short-term rates is transformed into a long-term security. Therefore, the proposed amendments would have limited the permissible conditions with respect to conditional puts to the following: (1) default in the payment of principal or interest on the underlying security; (2) the bankruptcy, insolvency, or receivership of the issuer or a guarantor of the underlying security; (3) the downgrading of either the underlying security or a guarantor by more than two full rating categories; and (4) in the case of a tax exempt security, a determination by the Internal Revenue Service of taxability with respect to the interest on the security.[97] These conditions were designed to permit the fund to monitor the continued availability of a demand feature and to take steps to sell the security or replace the demand feature if it appears that conditions are likely to occur that would limit the ability of the fund to exercise the demand feature.[98]

Many commenters objected to the proposed definition of the term ''conditional put.'' These commenters stated that the current market has few, if any, variable rate demand notes (''VRDNs'') with conditional puts that would satisfy the proposed definition. Even the commenters who recommended the proposed conditions conceded that although most put providers have conditions similar to those included in the proposed amendments, every provider uses somewhat different, often broader, language.[99] As a result, modifying the scope of one or more of the four conditions would not address this concern.

The Commission has decided to adopt an alternative approach suggested by several commenters by revising the rule to provide general guidance concerning the types of conditions that are appropriate for money fund investment. Rule 2a–7, as amended, provides that a security subject to a conditional demand feature is an eligible security only if the fund's board of directors (or its delegate) determines that there is ''minimal risk'' of occurrence of the conditions that

[89] *See supra* Section II.B.1.b. of this Release.

[90] Proposing Release, *supra* note 20, at Section II.C.2.d.(2).

[91] Paragraph (a)(9)(iii)(D)(*1*) of rule 2a–7, as amended. The amendments remove from the definition of eligible security unrated securities that are subject to demand features. Thus, in order for a security subject to a demand feature to be eligible for fund investment, the demand feature must be rated.

[92] Paragraph (c)(4)(v)(B) of rule 2a–7, as amended.

[93] Paragraph (c)(5)(i)(C) of rule 2a–7, as amended. This determination may not be delegated. Paragraph (e) of rule 2a–7, as amended. If the demand feature is no longer an eligible security, paragraph (c)(5)(ii) of rule 2a–7 requires the fund to obtain a new demand feature or dispose of the underlying security (unless the board of directors finds that it would be in the best interest of the fund not to dispose of the security). *See* Release 18005, *supra* note 11 at Section II.E.1. for a discussion of securities held by a money fund that are in default, are no longer eligible securities, or no longer present minimal credit risks.

[94] Paragraph (a)(9)(iii)(B) of rule 2a–7, as amended.

[95] Paragraph (a)(9)(iii) of rule 2a–7, as amended.

[96] The money fund could lose liquidity at a time when it is most necessary. A money fund is limited to investing no more than ten percent of its assets in illiquid securities. *See supra* note 65 and accompanying text and *infra* Section II.C.4.c. of this Release.

[97] The proposed amendments to the rule incorporated recommendations of Fidelity Management & Research Company (''Fidelity'') and the Investment Company Institute (''ICI''). *See* Letter from Matthew Fink, Senior Vice President and General Counsel, ICI, to Marianne Smythe, Director, Division of Investment Management (Mar. 25, 1991); Letter from Thomas D. Maher, Associate General Counsel, Fidelity, to Jonathan G. Katz, Secretary, U.S. Securities and Exchange Commission (Sept. 24, 1990), in File No. S7–13–90.

[98] Proposing Release, *supra* note 20, at Section II.C.3.

[99] *See* Letter from Thomas D. Maher, Associate General Counsel, Fidelity, to Jonathan G. Katz, Secretary, U.S. Securities and Exchange Commission (May 5, 1994); Letter from Thomas D. Maher, Associate General Counsel, Fidelity, to Kenneth J. Berman, Deputy Office Chief, Office of Disclosure and Investment Adviser Regulation, Division of Investment Management, U.S. Securities and Exchange Commission (June 17, 1994); Letter from Paul Schott Stevens, General Counsel, ICI, to Jonathan G. Katz, Secretary, U.S. Securities and Exchange Commission (May 5, 1994), in File No. S7–34–93.

would result in the demand feature not being exercisable.[100] The fund's board of directors (or its delegate) also must determine that: (1) the conditions limiting exercise can be monitored readily by the fund, or relate to the taxability, under federal, state or local law, of the interest payments on the security; or (2) the terms of the demand feature require that the fund receive notice of the occurrence of the condition and the opportunity to exercise the demand feature.[101]

Rule 2a–7 currently provides that a security subject to a conditional demand feature (''underlying security'') is an eligible security only if the demand feature is an eligible security and the underlying security has received a long-term rating from the Requisite NRSROs in one of the two highest long-term ratings categories or, if unrated, is determined to be of comparable quality. The rule thus assumes securities subject to conditional demand features are always long-term securities. The Commission is amending rule 2a–7 to provide that, in the case of an underlying security that has a remaining maturity of 397 days or less, the underlying security is an eligible security only if the demand feature is an eligible security and the underlying security has received a short-term rating from the requisite NRSROs in one of the two highest short-term ratings categories or, if unrated, is determined to be of comparable quality.[102]

4. Other Issues Applicable to Put Providers

a. *Accrued Interest.* The Commission proposed amendments to the definition of the term ''put'' and also requested comment whether additional amendments to the rule were necessary to restrict fund investment to certain types of credit and liquidity enhancements. The proposed amendments would have amended the definition of a ''put'' to specify that the put must enable the holder to receive not only the amortized cost of the securities, but also accrued interest. The Commission is adopting these amendments as proposed.[103]

b. *Notice of Substitution of Put Provider.* The Commission stated in the Proposing Release that it is aware of several instances in which a money fund had invested in a security backed by a LOC or other credit or liquidity enhancement that was replaced during the life of the underlying security without notice to the fund.[104] A fund must know the identity of the put provider for a number of reasons, which include a determination of whether the fund is in compliance with the rule's put diversification and credit quality provisions. The Proposing Release asked commenters to consider whether the rule should be amended to limit fund investment in puts that obligate the issuer of the underlying security (or the trustee under any applicable indenture) to inform investors of the substitution of the put provider. All the commenters responding to this question agreed with the Commission that it is essential for the control of credit risk and for compliance with the rule that funds be aware of the identity of their put providers at all times, and that rule amendments would be appropriate.[105]

The Commission is adopting amendments to address these concerns. Under the amendments, a security subject to a demand feature is not eligible for fund investment unless arrangements are in place to notify the fund holding the security in the event that there is a change in the identity of the issuer of a demand feature.[106]

c. *Liquidity Requirements for Money Funds and the Three Business Day Settlement Cycle.* Section 22(e) of the 1940 Act provides, with certain exceptions, that no registered investment company may postpone the date of payment upon redemption of a redeemable security for more than seven days after the security is tendered for redemption. The Commission has stated that all mutual funds should limit their holdings of illiquid securities to ensure that they can satisfy all redemption requests within the seven day period. The Commission considers a security to be illiquid if it cannot be disposed of within seven days in the ordinary course of business at approximately the price at which the fund has valued it.[107] The limit on money fund holdings of illiquid securities is ten percent of fund assets.[108]

Rule 15c6–1 under the Securities Exchange Act of 1934, which recently became effective, established three business days (''T+3'') as the standard settlement period for securities trades effected by a broker or dealer.[109] The Division of Investment Management provided advice regarding the implications of the T+3 standard in determining whether a security held by a fund should be deemed liquid for purposes of the restrictions described above.[110] This issue is significant for money funds, because a large percentage of money fund assets consist of securities with a seven day demand feature.[111]

The Division noted that, because rule 15c6–1 applies to brokers and dealers and does not apply directly to funds, its implementation does not change the standard for determining liquidity, which is based on the requirements of section 22(e) of the 1940 Act. As a practical matter, however, many funds (including money funds) will have to meet redemption requests within three days because a broker or dealer will be involved in the redemption process. Many of these funds hold portfolio securities that do not settle within three days. In light of the T+3 standard, the Division recommended that funds should assess the mix of their portfolio holdings to determine whether, under normal circumstances, they will be able to facilitate compliance with the T+3 standard by brokers or dealers. Factors the funds should consider include the percentage of the portfolio that would settle in three days or less, the level of cash reserves, and the availability of lines of credit or interfund lending facilities. The Commission shares the Division's concerns and urges money funds to monitor carefully their liquidity needs in light of the shorter settlement period.

5. Short-Term Ratings

Rule 2a–7 currently distinguishes between short-term and long-term

[100] Paragraph (c)(3)(iii)(B) of rule 2a–7, as amended.

[101] *Id.*

[102] Paragraph (c)(3)(iii)(C)(*1*) of rule 2a–7, as amended.

[103] Paragraph (a)(16) of rule 2a–7, as amended.

[104] Proposing Release, *supra* note 20, at Section II.D.1.c.

[105] A number of these commenters discussed the problems a fund may encounter in obtaining notice of the substitution of a put provider when the securities are held by an intermediary, such as a securities depository. The Commission was advised that intermediaries employ methods to transmit notice of this type to their participants.

[106] Paragraph (a)(9)(iii)(D)(*2*) of rule 2a–7, as amended. The obligation to provide notice may be the obligation of the issuer of the underlying security, the issuer of the demand feature, or a third party, such as the dealer from which the fund wishes to purchase the security.

[107] Release 14983, *supra* note 64; Securities Act Rel. No. 6862 (Apr. 23, 1990) [55 FR 17933 (Apr. 30, 1990)] (adopting Rule 144A under the Securities Act of 1933 (discussing the definition of ''liquid'' and citing Release 14983).

[108] Release 14983, *supra* note 64 at Section A.4.; Investment Company Institute (pub. avail. Dec. 9, 1992).

[109] Rule 15c6–1 [17 CFR 240.15c6–1] generally provides that ''a broker or dealer shall not effect or enter into a contract for the purchase or sale of a security (other than an exempted security, government security, municipal security, commercial paper, bankers' acceptances, or commercial bills) that provides for payment of funds and delivery of securities later than the third business day after the date of the contract unless otherwise expressly agreed to by the parties at the time of the transaction.'' Securities Exchange Act Rel. No. 33023 (Oct. 6, 1993) [58 FR 52891 (Oct. 13, 1993)].

[110] *See* T+3 Letter, *supra* note 65.

[111] *Id.*

securities based on whether the security has a remaining maturity of 366 days—primarily for the purpose of distinguishing between securities that have short-term and long-term ratings. NRSROs do not always draw such a line when assigning ratings.[112] Therefore, the Commission has revised the rule to replace references to ''short-term securities'' and ''long-term securities'' in various sections of the rule with references to securities that have received short-term and long-term ratings from a NRSRO.[113] Whether a security has received a long- or a short-term rating from a NRSRO will depend upon how the NRSRO has characterized its rating.

D. Other Diversification and Quality Standards

1. Repurchase Agreements

Rule 2a–7 allows a fund to ''look through'' a repurchase agreement (''repo'') to the underlying collateral for diversification purposes when the obligation of the counterparty is ''collateralized fully.'' [114] Under the current rule, a repo is collateralized fully if, among other things, the collateral consists entirely of Government securities or securities that, at the time the repo is entered into, are rated in the highest rating category by the requisite NRSROs.[115] The Commission is adopting, as proposed, amendments to permit a fund to treat the repo as collateralized fully only if it is collateralized by securities that would qualify the repo for preferential treatment under the Federal Deposit Insurance Act [116] or the Federal Bankruptcy Code.[117] The Proposing Release noted that if the collateral does not qualify for special treatment under either of these statutes, a fund could encounter significant liquidity problems if a large percentage of its assets were invested in a repo with a bankrupt counterparty.[118] Although some commenters argued that the rule should encompass types of collateral that fall outside the repo specific provisions of the Bankruptcy Code, the Commission believes that the ''look through'' provisions of the rule would be inappropriate in these circumstances because the credit and liquidity risks assumed by the fund would be tied directly to the counterparty rather than the issuers of the underlying collateral.[119]

2. Pre-Refunded Bonds

The Proposing Release noted that a significant portion of tax exempt fund assets consist of pre-refunded bonds—bonds the payment of which are funded by and secured by escrowed Government securities.[120] The proposed amendments to the rule would have allowed funds to ''look through'' the pre-refunded bonds to the escrowed securities for diversification purposes if the underlying securities are Government securities and the escrow arrangement satisfies certain conditions designed to assure that the bankruptcy of the issuer of the pre-refunded bonds would not affect payments on the bonds from the escrow account. The proposed amendments would have limited fund investment in pre-refunded bonds issued by the same issuer to twenty-five percent of its assets. Because these securities would, in effect, be treated as Government securities, they would not be subject to a diversification limitation.

Most commenters supported the proposed treatment of pre-refunded bonds. A few of these commenters suggested that the twenty-five percent limitation per issuer was not necessary since the issuer's credit typically does not secure such bonds.[121] The Commission agrees, and has eliminated this limitation.[122] The Commission has decided to make additional technical modifications to the conditions applicable to the escrow arrangements that were suggested by the commenters.[123] The Commission is also amending the rule to include within the definition of an ''unrated security'' a rated security that subsequently was made subject to a refunding agreement.[124] This amendment clarifies that a fund must disregard ratings given to a security before the security became a ''refunded security'' (as that term is defined in the rule) in determining whether the security is an eligible security (as that term is also defined in the rule).

---

[112] *See, e.g.,* Fitch Ratings Book (May 1995) (short-term ratings apply to debt payable on demand or to securities with original maturities of up to three years), and Orrick, Herrington & Sutcliffe (pub. avail. July 20, 1994) (synthetic warrants maturing in twenty-two months given short-term ratings by NRSROs).

[113] Paragraphs (a)(9) (definition of ''eligible security''), (a)(11) (definition of ''first tier security''), (a)(29) (definition of ''unrated security''), and (c)(3)(iii)(C) (requirements for security subject to conditional demand feature) of rule 2a–7, as amended. In addition, the Commission has eliminated the definitions of ''short-term'' and ''long-term'' from the rule.

[114] Paragraph (c)(4)(vi)(A)(*1*) of rule 2a–7, as amended. A money fund investing in a repurchase agreement that does not meet the requirements of this paragraph may not ''look through'' and must instead treat the counterparty to the agreement as the issuer.

[115] *See* Proposing Release, *supra* note 20, at Section II.D.3.

[116] *See also* 12 U.S.C. 1821(e)(8) (A) and (C) (affording preferential treatment to ''qualified financial contracts''), 12 U.S.C. 1821(e)(8)(D)(i) (defining qualified financial contract to include repurchase agreements) and 12 U.S.C. 1821(e)(8)(D)(v) (defining repurchase agreement).

Not all collateral that would qualify a repo for preferential treatment under the Federal Deposit Insurance Act would be permitted. Of the mortgage-related securities referred to in 12 U.S.C. 1821(e)(8)(D)(c), only ''mortgage related securit[ies]'' as defined in Section 3(a)(41) of the 1934 Act [15 U.S.C. 78c(a)(41)] would be permitted.

See sections 101(47) of the Federal Bankruptcy Code (''Bankruptcy Code'') (defining ''repurchase agreement''), and 559 (protecting repo participants from the Bankruptcy Code's automatic stay provisions) [11 U.S.C. 101(47), 559]. The Bankruptcy Code defines a repurchase agreement as follows:

An agreement, including related terms which provides for the transfer of certificates of deposit, eligible bankers' acceptances, or securities that are direct obligations of, or that are fully guaranteed as to principal and interest by, the United States or any agency of the United States against the transfer of funds by the transferee of such certificates of deposit, eligible bankers' acceptances, or securities with a simultaneous agreement by such transferee to transfer to the transferor thereof certificates of deposit, eligible bankers' acceptances, or securities as described above, at a date certain no later than one year after such transfer or on demand, against the transfer of funds.

[117] Paragraph (a)(4) of rule 2a–7, as amended. Depository institutions are not eligible for protection under the Bankruptcy Code. Section 109 of the Bankruptcy Code [11 U.S.C. 109]. Instead, the bank regulatory laws provide for the establishment of conservatorship and receiverships of depository institutions in default. *See, e.g.,* section 11 of the Federal Deposit Insurance Act [12 U.S.C. 1821].

[118] Proposing Release, *supra* note 20, at n. 172.

[119] *Id.*

[120] *Id.*

[121] The twenty-five percent limitation was a condition specified in a ''no-action'' position taken by the Division of Investment Management in T. Rowe Price Tax-Free Funds (pub. avail. June 24, 1993) regarding the treatment of these securities for purposes of section 5(b)(1) of the 1940 Act. *See* Proposing Release, *supra* note 20, at n. 38 and accompanying text.

[122] The Commission is also eliminating the limitation for funds other than money funds that otherwise rely on the staff no-action position set forth in T. Rowe Price Tax-Free Funds.

[123] Paragraphs (a)(18) and (c)(4)(vi)(A)(*2*) of rule 2a–7, as amended. The proposed amendments would have permitted a fund to ''look through'' the pre-refunded bonds to the escrowed securities for diversification purposes if: (1) the escrowed securities were Government securities; (2) the escrowed securities were pledged only with respect to the payment of principal, interest and premiums on the pre-refunded bonds; and (3) either an independent certified public accountant or a NRSRO certified that the escrowed securities would satisfy all scheduled payments of principal, interest and premiums on the pre-refunded bonds. Commenters urged the Commission to clarify condition (2) by stating that excess proceeds could be remitted to the issuer or a third party. Commenters also noted that NRSROs rarely provide the certification described in condition (3), and requested that the reference to a NRSRO be deleted from the text. The rule reflects these comments; only independent certified public accountants may provide the certification.

[124] Paragraph (a)(29)(iii) of rule 2a–7, as amended. If the security has a NRSRO rating that does reflect the existence of the refunding agreement, then the security would not be considered unrated. *Id.*

3. Diversification Safe Harbor

A money fund that elects to be diversified must comply with the requirements of section 5(b)(1) of the 1940 Act and the rules under that section.[125] These requirements are applicable to most taxable and many tax exempt money funds, since most elect to be diversified. Although rule 2a–7's diversification requirements are more strict, under certain circumstances a money fund may be in compliance with rule 2a–7, but not in compliance with section 5(b)(1).[126] The proposed amendments would have provided that money funds complying with rule 2a–7's diversification requirements are deemed to be diversified under section 5(b)(1) (''diversification safe harbor''). Commenters discussing this aspect of the proposal supported the diversification safe harbor, and the Commission is adopting the amendments as proposed.[127]

4. Three-Day Safe Harbor

Rule 2a–7 currently permits a fund to invest more than five percent of its assets in the first tier securities of a single issuer for up to three business days (the ''three-day safe harbor'') and does not contain any limitation on the percentage of fund assets that can be invested in accordance with this provision. Since the provision is primarily applicable to taxable funds, which typically are diversified companies within the meaning of section 5(b)(1), funds could not use this provision to invest more than twenty-five percent of their assets in the securities of a single issuer. The Commission proposed to extend the availability of the three-day safe harbor to national funds. To assure that the three-day safe harbor could not have the effect of allowing funds that are not diversified to invest an inordinate portion of their assets in a single issuer at any time, the proposed amendments would have limited to twenty-five percent the percentage of fund assets that may be invested under the safe harbor at any one time. The Commission is adopting this amendment substantially as proposed.[128]

E. Asset Backed Securities and Synthetic Securities

1. Background

The proposed amendments would have amended rule 2a–7 to clarify the application of the rule to ''synthetic'' tax exempt securities and ABSs. Both types of securities rely on demand features and complex liquidity arrangements that are designed to meet the risk-limiting conditions of the rule.

An ABS represents an interest in a pool of financial assets, such as credit card or automobile loan receivables. Typically, an ABS is sponsored by a bank or other financial institution to pool financial assets and convert them into capital market instruments, thereby enabling the sponsor to transform illiquid assets into cash and increase balance sheet liquidity.[129] The ABS is structured to assure that the issuer of the ABS will not be affected by the bankruptcy of the sponsor. In addition, the structure of the ABS affects the nature and amount of the credit enhancement. While structural issues affect the risks associated with many types of securities, they are particularly important in evaluating ABSs.[130]

Synthetic securities are another form of ABSs that have been developed to address the shortage in the supply of short-term tax exempt securities.[131] While a variety of synthetic structures exist, all involve trusts and partnerships that, in effect, convert long-term fixed-rate bonds into variable or floating rate demand securities. Typically, one or two long-term, high quality, fixed-rate bonds of a single state or municipal issuer (the ''core securities'') are deposited in a trust by the sponsor. Interests in the trust may be distributed through an offering of securities to the public registered under the 1933 Act, or through an offering exempt from the Act's registration requirements, such as a ''private placement.'' Holders of interests in the trust receive interest at the current short-term market rate and the sponsor receives the difference (after administrative expenses) between the current market interest rate and the long-term rate paid by the core securities. An affiliate of the sponsor or a third party (usually a bank) issues a conditional demand feature permitting holders to recover principal at par within a specified period. The demand features are conditional to address tax-related concerns.

The proposed amendments to the rule would have established specific criteria for fund investment in ABSs, and would have addressed issues concerning the diversification, maturity and quality standards applicable to these types of securities. Most commenters argued that it was not necessary to amend the rule in order to provide for the treatment of ABSs because the diversification, quality, and maturity standards applicable to ABSs could be addressed within the existing framework of the rule. Questions were raised, however, concerning the applicability of the rule to ABSs both prior to and after the publication of the Proposing Release,[132] and commenters presented widely divergent and, sometimes, conflicting views on how ABSs should be treated. The Commission therefore has concluded that amendments are necessary to reduce uncertainty concerning the application of the rule to these securities.

2. Definitions

The Commission is adopting, substantially as proposed, certain definitions used in the rule. The term ''asset backed security'' is defined as a fixed-income security issued by a ''special purpose entity,'' substantially all the assets of which consist of

[125] *See supra* note 30; Proposing Release, *supra* note 20, at n. 29 and accompanying text.

[126] One difference that may cause this to occur is the timing of the measurement of diversification. Compliance with section 5(b)(1) of the 1940 Act is measured at the time of a purchase based on the value of the fund's total assets as of the end of the preceding fiscal quarter. *See* rule 5b–1 [17 CFR 270.5b–1]). For purposes of rule 2a–7, both the fund's total assets (as defined in the rule) and compliance with the rule's diversification requirements are measured at the time a purchase is made. *See* paragraph (c)(4)(i) of rule 2a–7, as amended.

[127] Paragraph (c)(4)(vii) of rule 2a–7, as amended.

[128] Paragraph (c)(4)(iii) of rule 2a–7, as amended. Because single state funds are required to be diversified only as to seventy-five percent of their assets, they have available a twenty-five percent basket to accommodate purchases in excess of five percent. Paragraph (c)(4)(i) of rule 2a–7, as amended. As a result, the three-day safe harbor of paragraph (c)(4)(ii) of the amended rule is not extended to them.

[129] For a detailed discussion of ABSs, *see* U.S. Securities and Exchange Commission Division of Investment Management, *Protecting Investors: A Half Century of Investment Company Regulation*, May 1992, at 1–103 and Investment Company Act Rel. No. 18736 (May 29, 1992) [57 FR 23980 (June 5, 1992)] and Investment Company Act Rel. No. 19105 (Nov. 19, 1992) [57 FR 56248 (Nov. 27, 1992)] respectively proposing and adopting rule 3a–7 under the 1940 Act [17 CFR 270.3a–7], the rule excluding the issuers of certain ABSs from the definition of investment company.

[130] While the structure of ABSs vary, the ABSs that have been marketed to money funds have generally involved: (i) the trust, which issues the ABSs; (ii) the sponsor, which contributes the assets to the trust; (iii) the servicer, which is responsible for administering the assets in the pool; (iv) the trustee, which monitors the activities of the servicer, and (v) the bank, which provides some form of liquidity and/or credit enhancement to assure that the trust will have sufficient funds to meet interest and amortization payments in the event that cash flow from the underlying assets is insufficient to meet the payment schedule of the ABSs.

[131] *See, e.g.*, Peter Heap, ''Inside Derivatives Price and Demand Are Guide in Building Secondary Market Derivatives,'' *Bond Buyer*, Mar. 14, 1995 at 4; ''Portfolio Manager Paints Derivatives with a Broad Brush,'' *The Guarantor*, Oct. 10, 1994 at 3.

[132] *See, e.g.*, Donaldson, Lufkin & Jenrette Securities Corporation (pub. avail. Sept. 23, 1994); Orrick, Herrington & Sutcliffe (pub. avail. July 27, 1994).

''qualifying assets.'' [133] The term ''special purpose entity'' is defined as a trust, corporation, partnership or other entity organized for the sole purpose of issuing fixed-income securities, which securities entitle their holders to receive payments that depend primarily on the cash flow from qualifying assets.[134] Finally, the term ''qualifying assets'' is defined as financial assets, either fixed or revolving, that by their terms convert to cash within a finite time period, plus any rights or other assets designed to assure the servicing or timely distribution of proceeds to security holders.[135]

3. Diversification Standards

a. *Diversification: General.* The proposed diversification standards would have distinguished between qualifying assets that consist of the securities of ten or fewer issuers, and qualifying assets that consist of the securities of more than ten issuers. In the case of qualifying assets that consist of securities issued by ten or fewer issuers (*e.g.*, most tax exempt tender option bond structures),[136] the issuer of each core security would have been treated as the issuer for issuer diversification purposes. The sponsor of the ABS would have been treated as the issuer when the ten issuer limit was exceeded.

(1) *Special Purpose Entity as Issuer.* In proposing to treat the sponsor of the special purpose entity as the issuer of the ABS, the Commission assumed that the credit quality of the ABS reflects the asset origination practices of the sponsor.[137] While some commenters agreed with the Commission's analysis, most commenters addressing the subject strongly opposed treating the sponsor of the ABS as the issuer for diversification purposes. They argued that the special purpose entity is protected in the event of the sponsor's bankruptcy so that an investment in an ABS does not reflect the credit risks associated with an investment in the sponsor. The commenters pointed out that the NRSRO ratings assigned to ABSs are premised on the integrity of the structure of the special purpose entity. These commenters urged that the rule treat the special purpose entity as the issuer of the ABS. Commenters also pointed out that the proposed treatment of the sponsor as the issuer of the ABS was inconsistent with the approach of the Commission elsewhere in the securities laws.[138]

The Commission has decided to modify the proposal to conform with its treatment of the special purpose entity as the sponsor of the ABS in other contexts. The diversification standards adopted treat the special purpose entity as the issuer of the ABS, subject to the exception described below.[139]

(2) *Looking through the Special Purpose Entity.* Several commenters agreed that in some circumstances it would be appropriate to ''look through'' the special purpose entity and treat the obligor of the qualifying assets as the issuer of a portion of the ABS. These commenters asserted that whether to look through the special purpose entity should not turn on the number of qualifying assets, as the Commission proposed, but the extent to which the special purpose entity is concentrated in the assets of a single obligor.

The Commission believes that the approach recommended by the commenters has advantages over that included in the proposal. The proposed approach was designed primarily to require a fund to look through the special purpose entity in the case of a tender option bond or other synthetic security that tends to have few underlying securities. These structures may have more underlying securities, but it would be appropriate to continue to look to the ultimate obligor of the underlying security if the security constitutes a sufficiently large portion of the obligations underlying the ABS. Moreover, it would be appropriate to treat an obligor in a more traditional ABS as the issuer of a proportionate portion of the ABS when the security represents a sufficiently large portion of the ABS.

Based on these considerations, the Commission has revised the rule to provide that the special purpose entity generally is treated as the issuer of the ABS; however, any entity whose obligations constitute ten percent or more of the principal amount of the qualifying assets backing the ABS is deemed to be the issuer of that portion of the ABS equal to the percentage of the qualifying assets represented by all of the obligations of the entity included in the pool.[140] As amended, the rule provides that a special purpose entity whose qualifying assets are themselves ABSs (''secondary ABSs'') will be treated as the issuer of the secondary ABSs.[141] A fund holding ABSs is required to make the calculations necessary to determine the issuer of the ABSs for diversification purposes on a periodic basis.[142]

b. *Diversification: First Loss Guarantees.* The Proposing Release noted that some ABSs are issued with guarantees as to first losses, in which an institution guarantees all losses up to a specified percentage (*e.g.*, ten percent of the assets of the pool).[143] Because the loss coverage is usually a multiple of the likely losses to be experienced, the possibility of the losses exceeding the coverage generally is considered to be remote. Because a first loss guarantee exposes the guarantor to essentially the same risk as a guarantor of the entire value of the security, the Commission proposed that a first loss guarantor be treated as guarantor of the entire principal amount of the security for purposes of the put diversification standards.

Only one commenter supported this aspect of the Commission's proposal. The remaining commenters opposed the proposed amendment, and generally argued that the proposed treatment of first loss guarantors was inconsistent with the proposed treatment of put providers whose obligations are limited

[133] Paragraph (a)(2) of rule 2a–7, as amended.

[134] This term excludes investment companies. *Id.*

[135] *Id.* The Division of Investment Management has received requests for interpretive guidance under rules 2a–7 and 3a–7 under the 1940 Act regarding trusts that hold assets that may not be redeemed or mature within a ''finite time period.'' *See, e.g.*, Donaldson, Lufkin & Jenrette Securities Corp. (pub. avail. Sept. 23, 1994) (auction rate preferred stock issued by closed-end fund that remains outstanding after sale at auction); Brown & Wood (pub. avail. Feb. 24, 1994) (cumulative preferred stock with no determinable liquidation date). The Commission welcomes requests for interpretive guidance or exemptive relief concerning such instruments. Rule 2a–7, as amended, should not be interpreted to permit investments in ABSs that hold assets that are not ''qualifying assets'' if the rule's conditions applicable to investment in ABSs (*e.g.*, the rating requirement) are not complied with.

[136] *See* Proposing Release, *supra* note 20, at Section II.C.4.d.

[137] *Id.*

[138] One commenter stated that a test different from the one proposed—that is, one based on asset concentration, would be consistent with certain positions taken by the Division of Corporation Finance. An asset concentration in excess of ten percent may elicit staff comments requesting disclosure of financial information regarding the obligor of the assets. *See* Staff Accounting Bulletins 71 and 71A (''SAB 71/71A'').

[139] Paragraph (c)(4)(vi)(A)(*4*) of rule 2a–7, as amended.

[140] *Id.* A diversification test of this type is consistent with a no-action position taken by the Division of Investment Management under section 5(b)(1) of the 1940 Act (Hyperion Capital Management, Inc. (pub. avail. Aug. 1, 1994)) and accounting positions taken by the Division of Corporation Finance (SAB 71/71A, *supra* note 136). *See also* Securities Exchange Act Release No. 34961 (Nov. 10, 1994) [59 FR 59590 (Nov. 17, 1994)] at n.80 and accompanying text.

[141] Paragraph (c)(4)(vi)(A)(*4*) of rule 2a–7, as amended.

[142] Paragraphs (c)(8)(iv) and (c)(9)(v) of rule 2a–7, as amended. The calculations are required to be made periodically because of the revolving nature of many ABSs' assets.

[143] Proposing Release, *supra* note 20, at Section II.C.4.e.

by contract.[144] One commenter objected because the amendment appeared to be addressing the guarantor's exposure to losses, rather than the fund's. Another commenter noted that, because of the contractual limit on the first loss guarantor's obligations, that guarantor is only required to make payment for losses experienced by the pool to the extent of its guarantee, and additional losses would have to be borne by the holder of the ABS.

Rule 2a–7 diversification requirements are designed to limit the exposure of the fund to any single issuer or credit enhancer.[145] Because the exposure of a first loss guarantor to losses the pool may incur is substantially greater than the exposure of a fractional guarantor, the exposure of the fund to the first loss guarantor is also substantially greater.[146] Therefore, the Commission believes that it is appropriate to treat first loss guarantees differently from fractional guarantees. Because first loss guarantees typically are designed to cover likely losses to be experienced, a statement made in the Proposing Release no commenter contradicted, it seems appropriate to treat the first loss guarantor as guaranteeing the entire value of the security. The Commission is adopting this amendment as proposed.[147]

4. Quality Standards

The proposed amendments to rule 2a–7 would have limited funds to investing only in an ABS that has a short-term rating from a NRSRO and, when the final maturity of the ABS exceeds 397 days, a long-term debt rating from a NRSRO. Many commenters opposed this proposed requirement, arguing that it would be redundant because the rule currently requires fund managers to perform a thorough legal, structural and credit analysis with respect to all securities. The Commission notes that the legal, structural and credit analysis required by rule 2a–7 is to be conducted independently of any determination of a security's credit quality made by a NRSRO.[148] In addition, the Commission continues to believe that, in view of the role NRSROs have played in the development of the structured finance markets, a rating requirement should not be burdensome.[149] Because both short- and long-term debt ratings from NRSROs reflect the NRSROs' legal, structural, and credit analyses, the rule requires that an ABS be rated in order to be eligible for fund investment, but does not specify whether the rating received must be short- or long-term.[150]

5. Maturity Standards

The proposed maturity standards for ABSs would have taken into account the difference between ''pay-through'' ABSs and ''pass-through'' ABSs. A pay-through ABS has a maturity and payment schedule different from that of its underlying assets. A pass-through ABS is one in which the cash generated by the underlying assets passes through directly to the ABS holders. Pass-through ABSs held by funds generally are not scheduled to return a holder's principal for three to five years. They typically provide for periodic interest rate resets and for principal to be returned after some period (not exceeding thirteen months) after a demand for payment has been made.

The proposed amendments would have provided that the final maturity of an ABS is the date on which principal is scheduled to be returned to the holder, regardless of whether demand has been made. The proposed amendments also would have permitted a fund to measure the maturity of an ABS with an adjustable rate of interest subject to a demand feature by reference to the time principal is scheduled to be repaid once demand is made, but only if the holder is entitled to receive principal and interest within thirteen months of making demand.

Several commenters expressed concern regarding the treatment of a pass-through ABS with a ''scheduled'' maturity. The commenters noted that the effect of the proposed amendments would be to allow funds to determine the maturity of an ABS by relying on the date on which principal is scheduled, but not necessarily required, to be repaid. These commenters concluded that the proposed amendments' reference to a scheduled principal repayment is troublesome because on that date there is no binding obligation under which the fund would receive payment. In light of the comments, the Commission has decided to modify the ABS maturity determination by amending the definition of ''demand feature'' to include a feature of an ABS permitting the fund unconditionally to receive principal and interest within thirteen months of making demand.[151]

[144] Under proposed amendments to the rule's put diversification provisions, the issuer of a fractional put would have been treated as guaranteeing only that portion of the value of the security which it contractually agreed to provide. *See* Proposing Release, *supra* note 20, at Section II.C.2.c. The Commission is adopting these amendments as proposed. *See supra* Section II.C.1.d. of this Release and paragraph (c)(4)(vi)(B)(*2*) of rule 2a–7, as amended.

[145] *See* Proposing Release, *supra* note 20, at Section II.A.

[146] For example, if a fractional put provider guarantees ten percent of the losses experienced by a $1 million pool, and the pool has losses of seven percent, the put provider's exposure is $7,000. By contrast, if a first loss guarantor guarantees the first ten percent of losses experienced by a $1 million pool, and the pool has losses of seven percent, the guarantor's exposure is $70,000—an amount ten times greater than the fractional put provider's exposure.

[147] Paragraph (c)(4)(vi)(B)(*2*) of rule 2a–7, as amended. The Commission also notes that the proposed treatment of first loss guarantees under rule 2a–7 is consistent with a notice of proposed rulemaking issued by the Department of the Treasury, the Federal Reserve System, and the Federal Deposit Insurance Corporation. ''Risk-Based Capital Requirements—Recourse and Direct Credit Substitutes; Proposed Rule,'' 59 FR 27115 (May 25, 1994). As described in that release, the Office of the Comptroller of the Currency, Department of the Treasury, The Board of Governors of the Federal Reserve System, the Federal Deposit Insurance Corporation and the Office of Thrift Supervision, Department of the Treasury proposed revisions to their risk-based capital standards that would treat certain first loss guarantees as a guarantee of the entire principal amount of the assets enhanced.

[148] Paragraph (c)(3)(i) of rule 2a–7, as amended; Release 18005, *supra* note 11, at Section II.A. (adopting amendments to paragraph (c)(2) of rule 2a–7); Letter to Registrants (pub. avail. May 8, 1990). For a discussion of the limitations of NRSRO ratings for evaluating certain aspects of ABSs, *see* Investment Company Act Rel. No. 20509 at § I.B.1 (Aug. 31, 1994) [59 FR 46304 (Sept. 7, 1994)].

[149] Proposing Release, *supra* note 20, at Section II.C.4.b.

[150] Paragraph (a)(9)(iii)(C) of rule 2a–7, as amended.

[151] Paragraph (a)(7)(ii) of rule 2a–7, as amended. For example, prior to the fund's election to receive principal payments, the maturity of an adjustable rate ABS with a five year final maturity and a demand feature permitting the fund to obtain principal and interest within thirteen months would be considered a thirteen month instrument at all times (*i.e.*, on a rolling basis). After the election is made, a fund could treat such an instrument as having a maturity equal to the date when principal will be returned (*i.e.*, each day that the fund holds the instrument after election, the fund could reduce the security's maturity by one day).

This amendment supersedes an interpretive position taken by the Division of Investment Management in Merrill, Lynch, Pierce, Fenner & Smith (pub. avail. Apr. 6, 1987). In Merrill, Lynch, the Division addressed the maturity determination for a type of variable rate coupon note. A holder of the notes was required to satisfy certain conditions in order to receive principal on ''the date noted on the face of the instrument'' (quoting paragraph (d)(1) of rule 2a–7, prior to amendment), and, so long as the notes continued to be held, their maturity was automatically extended at the end of each interest rate reset period by one additional such period. The Division concluded that, subject to certain conditions, a money fund could treat such a security as having a maturity equal to the date specified on the face of the instrument, as automatically extended by an additional interest payment period. The Merrill, Lynch position is inconsistent with paragraph (d) of rule 2a–7, as amended, which provides that an instrument's maturity is the date on which ''the principal amount must unconditionally be paid'' and with the maturity determination requirements for ABS discussed in the text of this release. Money funds may, however, continue to treat a ''mandatory tender'' feature as an unconditional right to receive principal, provided that the issuer's obligation to pay is not dependent on the fund taking any action (such as giving notice to the issuer of the intent to

The maturity of an ABS with a final maturity in excess of 397 days may be determined by reference to a demand feature only if the ABS also meets the definition of a floating or variable rate security.[152]

F. Variable and Floating Rate Securities

Rule 2a–7 generally prohibits a money fund from acquiring a security with a remaining maturity of more than 397 calendar days. The purpose of this requirement and the other maturity provisions of the rule is to limit a fund's exposure to interest rate risk.[153] The rule generally requires a fund to measure the maturity of a portfolio security by reference to the security's final maturity date. A fund, however, may measure the maturity of a ''variable rate security'' or a ''floating rate security'' (collectively, ''adjustable rate securities'') by reference to a date that is earlier than the final maturity date.

Rule 2a–7 defines a ''variable rate security'' as an instrument the terms of which provide for the adjustment of the interest rate on specified dates and that, upon adjustment, can reasonably be expected to have a market value that approximates par value. A ''floating rate'' security is defined as an instrument the terms of which provide for the adjustment of its interest rate whenever a specified benchmark changes and that, at any time, can reasonably be expected to have a market value that approximates par value. Rule 2a–7 allows certain adjustable rate securities to be treated as having maturities shorter than their final maturities; however, the manner in which an adjustable rate instrument is treated depends upon whether it has a demand feature, the final maturity of the instrument and whether the instrument is a Government security.

1. Maturity Determinations: Floating Rate Securities

Under the current rule, the maturity of a floating rate security subject to a demand feature is the period remaining until principal can be recovered through demand. The same test is generally applicable in determining the maturity of a variable rate security subject to a demand feature, the principal amount of which is scheduled on the instrument's face to be paid in more than 397 days. In contrast, a variable rate security (without a demand feature) scheduled to be paid in 397 days or less may be treated as having a maturity equal to the period remaining until the next readjustment of the interest rate. There is no parallel provision for floating rate securities with final maturities of 397 days or less.

Because variable and floating rate securities expose funds to similar types of interest rate risk, the Commission proposed to amend the rule to permit funds to determine the maturity of floating rate securities with final maturities of 397 days or less by referring to the interest rate reset. Commenters supported the proposed amendment, which the Commission is adopting substantially as proposed.[154] The interest rate of a floating rate security moves in tandem with changes in the interest rate to which it is linked, and the amendments will permit funds to treat these instruments as having one-day maturities.

2. Maturity Determinations: Variable Rate Securities

Under the current rule, when the period remaining until the final maturity of a variable rate demand instrument (*i.e.*, its maturity without reference to the demand feature) is less than 397 days, its maturity under rule 2a–7 is the longer of the period remaining until the next interest rate readjustment or the date on which principal can be recovered on demand. A variable rate security with the same final maturity that does not have a demand feature is treated as having a remaining maturity equal to the period remaining until the next readjustment in the interest rate. The effect of these provisions is that a variable rate security with a final maturity of less than 397 days will have a *longer* maturity when a demand feature is added to it.

To correct this anomaly, the Commission proposed that only a variable rate demand security with a final maturity in excess of 397 days would have its maturity measured by the longer of the period remaining until its next interest rate adjustment or the date on which principal can be recovered on demand; the maturities of securities with final maturities of 397 days or less would be measured by reference to the earlier of the date on which the interest rate next readjusts or the date on which principal can be recovered on demand. Commenters supported the proposed amendment, which the Commission is adopting as proposed.[155]

3. Adjustable Rate Government Securities

Rule 2a–7 provides that ''an instrument that is issued or guaranteed by the United States government or any agency thereof which has a variable rate of interest adjusted no less frequently than every 762 days'' is deemed to have a maturity equal to the period remaining until the next readjustment of the interest rate.[156] The Commission is adopting two amendments to clarify the scope of this provision.

First, the amendments clarify that the maturity of the security may only be determined by reference to the interest readjustment date if, upon readjustment, the security can reasonably be expected to have a market value that approximates par value.[157] This change makes explicit that Government securities are treated the same way as other adjustable rate securities under the rule.[158]

Second, the reference to Government securities in paragraph (d)(1) of rule 2a–7 is being conformed to other provisions of the rule relating to Government securities. As amended, the provision applies to all Government securities, including securities issued by persons controlled or supervised by and acting as instrumentalities of the U.S. Government.[159]

4. Other Issues Concerning Adjustable Rate Securities

a. *Background*. Rule 2a–7 allows the maturity of adjustable rate securities to be determined by reference to interest rate adjustment dates if the security ''can reasonably be expected to have a market value that approximates its par value'' upon adjustment of the interest

redeem), other than physically delivering the notes or bonds for redemption.

[152] Paragraphs (d)(3) and (d)(5) of rule 2a–7, as amended. The maturity of a floating or variable rate ABS may also be determined by reference to a demand feature meeting the requirements of paragraph (a)(7)(i) of the amended rule.

[153] *See* Release 13380, supra note 7, at n.14 and accompanying text; State of Wisconsin (pub. avail. Mar. 3, 1983).

[154] Floating rate securities with final maturities of more than 397 days that are subject to demand features are deemed to having maturities equal to the period remaining until principal can be recovered through demand. Paragraph (d)(5) of rule 2a–7, as amended.

[155] Paragraph (d)(2) of rule 2a–7, as amended.

[156] Paragraph (d)(1) of rule 2a–7, as amended. Generally, the readjustment must occur every 397 days to reflect the rule's maturity requirements. For certain funds that mark-to-market, however, readjustment may occur every 762 days. Paragraph (c)(2)(ii) of rule 2a–7, as amended.

[157] This codifies the interpretation of the current rule. *See* Investment Company Institute (pub. avail. June 16, 1993); Morgan Keegan & Company, Inc. (pub. avail. July 24, 1992) at n.7.

[158] The amendments also make clear that this provision applies to floating rate Government securities. Paragraph (d)(1) of rule 2a–7, as amended.

[159] The amendment reflects a no-action position taken by the Division of Investment Management with respect to securities issued by instrumentalities of the U.S. government. *See* Student Loan Marketing Association (pub. avail. Jan. 18, 1989).

rate.[160] The Commission proposed to clarify that the board of directors or its delegate must have a reasonable expectation that, upon each adjustment of the interest rate until the final maturity of the security or until the principal amount can be recovered through demand, the security will have a market value approximating its amortized cost.[161]

Several commenters discussed the proposed amendments to the maturity determination provisions of the rule as they relate to adjustable rate Government securities. Commenters opposing this aspect of the proposed amendments emphasized that the amendments should exclude adjustable rate Government securities ''based on the lack of credit risk'' inherent in these instruments. The maturity determination provisions of the rule, however, are designed to limit a fund's exposure to interest rate, rather than credit, risk and recent history demonstrates that an investment in a Government security can expose the fund to substantial interest rate risk.[162] The Commission is, therefore, adopting the amendment as proposed.

The effect of the new provision is to prohibit funds from purchasing an adjustable rate Government security with a remaining maturity of more than 397 days unless the interest rate readjustment mechanism can reasonably be expected to return the instrument to par upon all interest rate adjustment dates during the life of the instrument. A fund could purchase an adjustable rate Government security with a remaining maturity of 397 days or less, the value of which the fund does not expect to return to par on all interest rate adjustment dates, but would have to treat the security as a fixed rate security and measure its maturity by reference to its final maturity. Adjustable rate securities with demand features generally would not be affected by the proposed changes because if a discount develops or is likely to develop a fund could exercise the demand feature and receive the amortized cost value of the instrument.

b. *Recordkeeping Requirement.* The Commission proposed to require a money market fund to maintain a written record of its determination that an adjustable rate security, the maturity of which is determined by reference to its interest rate readjustment date, will either maintain a value of par or return to par on each interest rate readjustment date through the life of the security. A number of commenters who opposed this requirement stated that further guidance regarding the definition of the term ''approximates par'' was necessary or that the rule should specifically state the amount of deviation that would be permissible. The Commission believes that this approach would be rigid and unnecessary, absent an indication that decisions reached in this area by funds are inconsistent with the purposes of the rule.

Other commenters asserted that the paperwork burden this requirement could entail might outweigh benefits to shareholders, and might have the effect of forcing funds to purchase higher proportions of fixed rate securities that may have a higher degree of price volatility than adjustable rate securities. The Commission is not persuaded by this argument. One of these commenters suggested that if the determination regarding the return to par would be common to a group of securities, a single documentation of the analysis should be sufficient. The Commission agrees. The amendments do not require a fund's board of directors to maintain a written determination for each individual adjustable rate security in the fund's portfolio—it is sufficient for the fund to maintain the required record for each type of security (*e.g.*, one record could be maintained for several different adjustable rate securities of similar credit quality whose interest rate readjustment mechanisms are tied to LIBOR plus or minus a number of basis points that make the securities similarly sensitive to interest rate changes). The Commission has decided to adopt the amendments as proposed.[163]

G. Other Amendments to Rule 2a–7

1. U.S. Dollar Denominated Instruments

To avoid exposure to foreign currency risk, rule 2a–7 limits fund investment to ''United States dollar-denominated securities.'' [164] The proposed amendments would have defined the term ''United States dollar-denominated'' to clarify that it means: (a) the payment of interest and principal must be made in U.S. dollars at all times; and (b) an eligible security's interest rate may not vary or float with a rate tied to foreign currencies, foreign interest rates, or any index expressed in a currency other than U.S. dollars.

Several commenters were critical of the proposed definition and recommended that the rule permit fund investment in securities on which the amount of interest payable is based on changes in the value of a foreign currency as long as principal and interest are payable in full in U.S. dollars. The Commission believes that amending the rule in this manner would have the effect of exposing the fund to currency fluctuations. The Commission has decided to adopt the definition of

[160] Paragraphs (a)(7) and (a)(21) of rule 2a–7 [17 CFR 270.2a–7(a)(7) and (a)(21)], prior to amendment. Adjustable rate securities may be priced at a premium to par value when the security pays interest above market rates. A fund may treat the security as an adjustable rate security for purposes of rule 2a–7's maturity provisions if the fund reasonably expects that upon readjustment of the interest rate, the market value of the security will approximate its amortized cost. The premium generally would be amortized over the life of the security. It is critical that the fund carefully consider all factors involved in the valuation of the security, particularly the likelihood of prepayment before the premium is fully amortized. An accelerated return of principal will require the fund to write off the premium before it is amortized, and could result in a significant deviation between the amortized cost and market value of the security.

[161] Paragraphs (a)(12) and (a)(30) of rule 2a–7, as amended.

[162] In the Proposing Release, the Commission noted that a number of adjustable rate securities developed specifically for money market funds had interest rate readjustment formulas that could not be expected to reflect short-term interest rates under certain conditions. At that time, the Commission expressed the concern that changes in interest rates or other conditions that could reasonably be foreseen to occur during the life of the securities could result in their market values not returning to par at the time of an interest rate readjustment. The Commission identified securities that displayed this characteristic, and concluded that such securities presented risks that were not appropriate for money market funds to assume. *See* Proposing Release, *supra* note 20, at nn.161–164 and accompanying text.

In June 1994, the Division of Investment Management provided money market funds and their advisers with additional guidance concerning investments in adjustable rate securities. The Division reminded fund managers of their general obligations under rule 2a–7 to ensure that money market funds invest only in securities that are consistent with maintaining stable net asset values, and directed money market funds that held these securities to work with their advisers in developing plans for their orderly disposition. *See* Letter from Barry P. Barbash, Director, Division of Investment Management, to Paul Schott Stevens, General Counsel, Investment Company Institute (June 30, 1994). Money market funds holding adjustable rate securities of the type described in the Proposing Release experienced problems when short-term interest rates increased last year. To maintain their funds' stable net asset values, a number of fund advisers took actions which included purchasing certain adjustable rate securities from their money market funds at their amortized cost value (plus accrued interest), or contributing capital to the funds. One fund holding notes of this type, the U.S. Government Money Market Fund, a series of Community Bankers Mutual Fund, Inc., announced in September 1994 that it would liquidate and distribute less than $1.00 per share to its shareholders. Press reports generally treated this liquidation as the first instance in which a money market fund had ''broken a dollar.'' *See* Brett D. Fromson, ''Losses on Derivatives Lead Money Fund to Liquidate,'' *Washington Post*, Sept. 28, 1994 at F1; Leslie Wayne, ''For Money Market Fund Investors, New Cautions,'' *N.Y. Times*, Sept. 29, 1994 at D1, D8.

[163] Paragraphs (c)(8)(iii) and (c)(9)(iv) of rule 2a–7, as amended.

[164] Paragraph (c)(3)(i) of rule 2a–7, as amended.

''United States dollar-denominated'' as proposed.[165]

2. Investment in Other Money Funds

The Commission is adopting, as proposed, amendments to rule 2a–7 to clarify that shares in other money funds that comply with the rule: (a) are first tier securities;[166] and (b) should be treated as having a rolling maturity equal to the period of time within which the acquired fund is required to make payment upon redemption under applicable law.[167] A shorter maturity may be used if the fund making the investment has a contractual arrangement with the other money fund for more rapid receipt of redemption proceeds.[168]

For diversification purposes, an investment in another money fund generally may be treated as an investment in any other issuer (and therefore generally cannot exceed five percent of a fund's assets).[169] An exception to this treatment is made for funds that invest substantially all of their assets in shares of another money fund (the ''underlying fund'') in which case the fund is permitted to ''look through'' the shares to the assets of the underlying fund.[170] These include funds in ''master-feeder'' arrangements and certain separate accounts offering variable insurance products. Such a fund will be deemed to be in compliance with rule 2a–7 for diversification and other purposes if the board of directors reasonably believes that the underlying money fund is in compliance with the rule.[171] The board of directors of the fund is not required to monitor every investment decision made by the underlying fund. Rather, the board could review the underlying fund's procedures and obtain regular reports concerning the underlying fund's compliance with the rule.[172]

3. Board Approval and Reassessment of Certain Securities

Rule 2a–7 currently requires the board of directors of a taxable fund to approve or ratify purchases of unrated securities and securities that are rated by only one NRSRO. The amendments eliminate this requirement.[173]

Rule 2a–7 also requires funds to limit portfolio investments to securities determined to present minimal credit risks. In compliance with this requirement, the fund's board of directors must reassess promptly whether a security presents minimal credit risks when the fund's investment adviser becomes aware that an unrated security or a second tier security has been given a rating by any NRSRO below the NRSRO's second highest rating category. The Proposing Release requested comment on whether to permit delegation of the reassessment requirement.[174] All the commenters who responded to this request suggested that the rule should permit delegation of the reassessment requirement to the fund's investment adviser. These commenters stated that the investment adviser is in a better position to make credit determinations given its staff and analytical and information resources. The Commission agrees, and is amending the rule as suggested.[175]

4. Recordkeeping

Amendments to rule 2a–7 require a fund to maintain a written record of the determination that a portfolio security presents minimal credit risks and to maintain a record of NRSRO ratings (if any) used to determine the status of a security under the rule.[176] The Commission is also adopting, as proposed, amendments to rule 31a–1 under the 1940 Act that require money funds to maintain in their portfolio investment records information identifying: (a) each security by its legal name; (b) any liquidity or credit enhancements associated with each security; and (c) any coupons, accruals, maturities, puts, calls or any other information necessary to identify, value and account for each security.

5. Defaulted Securities

Rule 2a–7 imposes certain obligations regarding defaulted securities.[177] The Commission proposed amending the rule to include ''events of insolvency'' as events that would trigger these obligations, and is adopting those amendments substantially as they were proposed.[178] The Commission is adopting as proposed an amendment to the rule that would require a fund to notify the Commission of the default of a security subject to a credit enhancement or demand feature only in the event that the provider of the enhancement or demand feature failed to fulfill its obligations to the fund.[179]

6. Technical Amendments

The Commission is adopting technical amendments to rule 2a–7 to clarify its terminology. References to ''instruments'' are being changed to ''securities.'' In addition, references to the requirement that the market value of an adjustable rate security must reasonably approximate its par value are being changed to clarify that the security's market value must reasonably approximate its amortized cost.[180] The definition of ''unrated security'' also is being revised to clarify that if an unrated security becomes rated while held by the fund, the fund may continue to treat it as an unrated security, in the same manner as a fund may continue to determine whether a security rated by a single NRSRO is first or second tier if a second NRSRO rates the security after it is acquired by the fund.[181] The definition of ''first tier security'' is also being amended to include government securities.[182]

III. Amendments to Disclosure Rules

The Commission is adopting amendments to the forms and advertising rules used by tax exempt

[165] Paragraph (a)(28) of rule 2a–7, as amended.

[166] Paragraph (a)(11)(iv) of rule 2a–7, as amended.

[167] Paragraph (d)(8) of rule 2a–7, as amended. *See also* Proposing Release, *supra* note 20, at n.182 and accompanying text; T+3 Letter, *supra* note 65.

[168] *Id.*

[169] Investment by one fund in another is limited by section 12(d)(1)(A) of the 1940 Act [15 U.S.C. 80a–12(d)(1)(A)]. Section 12(d)(1)(A) provides that a fund may not invest more than ten percent of its assets in securities issued by other investment companies, invest more than five percent of its assets in any single investment company, or acquire more than three percent of the voting securities of another investment company.

[170] Paragraph (c)(4)(vi)(A)(5) of rule 2a–7, as amended. The restrictions of section 12(d)(1)(A) do not apply if the fund making the investment invests all of its assets in shares of another fund, subject to certain conditions. Section 12(d)(1)(E) [15 U.S.C. 80a–12(d)(1)(E)].

[171] Paragraph (c)(4)(vi)(A)(5) of rule 2a–7, as amended. The responsibility for making this determination may be delegated by the board to the fund's adviser. Paragraph (e) of rule 2a–7, as amended.

[172] In addition, the investment objectives and policies of the two funds should not be inconsistent. *See* Guide 34 to Form N–1A and Guide 38 to Form N–3.

[173] Paragraph (c)(3) of rule 2a–7, as amended.

[174] Proposing Release, *supra* note 20, at Section II.D.6.

[175] Paragraphs (c)(5)(i)(A) and (e) of rule 2a–7, as amended.

[176] Paragraph (c)(9)(iii) of rule 2a–7, as amended.

[177] *See* Proposing Release, *supra* note 20, at Section II.D.8.

[178] Paragraphs (a)(10) and (c)(5)(ii) of rule 2a–7, as amended.

[179] Paragraph (c)(5)(iv) of rule 2a–7, as amended.

[180] Paragraphs (a)(12), (a)(30), and (c)(8)(iii) of rule 2a–7, as amended. *See supra* Section II.F.4.a. (discussion of determination that par will be approximated).

[181] Paragraph (a)(29) of rule 2a–7, as amended.

[182] Paragraphs (a)(11)(v) and (a)(13) of rule 2a–7, as amended. Prior to the adoption of today's amendments, a fund purchasing a government security would have been required to treat the security as an unrated first tier security (paragraph (a)(11)(iii) of rule 2a–7, as amended), because NRSROs do not rate government securities. As a result, the fund would have been required to perform a comparability analysis. Under the amended definition of ''first tier security,'' a fund may treat a government security as first tier without conducting a comparability analysis, even though the security has not received a rating from an NRSRO.

funds and is publishing a Staff Guide designed to elicit disclosures concerning the specific risks of investing in tax exempt funds.

A. Single State Funds

To alert investors to the greater risks of investing in single state funds, proposed amendments to Form N–1A would have a required a single state fund to disclose in its prospectus that: (1) its investments are concentrated geographically; (2) for a single state fund that does not meet the Five Percent Diversification Test, that the fund may invest a significant percentage of its assets in the securities of a single issuer; and (3) that an investment in the fund therefore may be riskier than an investment in other types of money funds.

Several commenters, while generally supporting additional disclosure, expressed concern that the proposed disclosure for single state funds might exaggerate the risk of investing in these funds, leading to investor confusion. These commenters urged the Commission not to require a single state fund to disclose that an investment in it may be riskier than an investment in another type of money fund. The amendments to rule 2a–7 require single state funds to be diversified at the five percent level as to seventy-five percent of their assets, but these funds are less diversified than other types of money market funds and are still dependent on the financial health of a particular state.[183] Because of the importance of diversification in protecting a fund from exposure to a particular issuer, the Commission has decided to require a single state fund that is not diversified as to 100% of assets to disclose on the cover page of the prospectus that it may invest a significant percentage of its assets in the securities of a single issuer, and that an investment in the fund may therefore be riskier than investment in other types of money funds. The Commission has also decided to adopt the disclosure requirement regarding geographic concentration, which may be placed in the text of the prospectus, substantially as proposed.[184]

B. Disclosure Concerning Exposure to Put Providers

The Commission is publishing an amendment to Staff Guide 21 to Form N–1A. The amendment interprets the form as requiring a money fund having more than forty percent of its portfolio subject to third party credit enhancements to disclose that the safety of its portfolio (and the ability of the fund to maintain a stable share price) is largely dependent upon guarantees from foreign and domestic banks and that these arrangements are not subject to federal deposit insurance. The wording of the guide has been changed somewhat from the draft published in the Proposing Release [185] to reflect the approach taken by the Commission in proposing to simplify money market fund prospectuses.[186]

Under the proposed amendments, money fund portfolio schedules would have been required to include information regarding put providers.[187] Those amendments are not being adopted at this time. The Commission is currently examining portfolio schedule requirements for investment companies generally and will continue to consider the proposed amendments in connection with that project.

C. Risk Disclosure in Certain Communications

Money funds are required to include in certain advertisements and sales literature a statement that an investment in a money fund is not insured or guaranteed by the U.S. Government and there can be no assurance that the fund will maintain a stable net asset value.[188] The amendments extend this requirement to ''tombstone'' advertisements under rule 134 of the 1933 Act.[189]

IV. Exemptive Rule Governing Purchases of Certain Portfolio Securities by Affiliated Persons

The Proposing Release noted that when money funds have held a security that is no longer eligible for fund investment, fund advisers or related persons frequently have repurchased the security from the fund at the security's amortized cost value to avoid any fund shareholder loss.[190] These transactions came within section 17(a)(2) of the 1940 Act [15 U.S.C. 80a–17(a)(2)], which prohibits an affiliated person of a fund, or an affiliated person of such a person, from knowingly purchasing a security from the fund in the absence of a Commission exemption. Nevertheless, the transactions appeared to be reasonable, fair, in the best interests of fund shareholders, and consistent with the actions that a fund should take in the event of a default of a portfolio security.[191] Thus, the staff of the Division of Investment Management advised parties to these transactions that the staff would not recommend enforcement action to the Commission if these transactions were consummated.

Based upon the Commission's experience with actions taken by funds and their affiliates to dispose of portfolio securities that were no longer eligible under rule 2a–7,[192] the Commission proposed new rule 17a–9 to exempt from section 17(a) of the 1940 Act the purchase of a security that is no longer an eligible security. Several commenters, including the ICI, opposed the adoption of rule 17a–9, asserting that its mere existence would cause investors to expect a fund's adviser to purchase ineligible securities from the fund, and guarantee that the fund will maintain a stable net asset value.

The Commission believes that existing rules applicable to money funds already address this concern by requiring money fund prospectuses and sales literature to disclose prominently that there is no assurance or guarantee that a fund will be able to maintain a stable net asset value of $1.00 per share.[193] Moreover, the Commission believes it unlikely that the existence of an exemptive rule alone will create any investor expectations.

The Commission has decided to adopt the rule as proposed. In doing so, the Commission is not suggesting that affiliated persons of funds have any legal obligation to enter into transactions covered by the new rule. The exemption applies to transactions where: (a) the purchase price is paid in cash; and (b) the purchase price is equal to the greater of the amortized cost of the security or its market price (in each

[183] *See supra* Section II.B.1.a. of this Release and paragraph (c)(4)(ii) of rule 2a–7, as amended.

[184] Item 4(c) of Form N–1A, as amended.

[185] Guide 21 to Form N–1A, as amended.

[186] Investment Company Act Rel. No. 21216 (July 19, 1995) [60 FR 38454 (July 26, 1995)].

[187] Proposing Release, *supra* note 20, at Section III.C.

[188] *See* paragraph (a)(7) of rule 482 [17 CFR 230.482(a)(7)] and introductory paragraph of rule 34b–1 [17 CFR 270.34b–1].

[189] Paragraph (e) or rule 134, as amended [17 CFR 230.134(e)].

[190] Proposing Release, *supra* note 20, at nn.12 and 28 and accompanying text.

[191] Paragraph (c)(5)(ii) of rule 2a–7, as amended, requires a fund holding a defaulted security to dispose of the security as soon as practicable consistent with achieving an orderly disposition of the security, unless the fund's board of directors concludes that disposal would not be in the best interests of the fund.

[192] *See* Testimony of Arthur Levitt, Chairman, U.S. Securities and Exchange Commission, Concerning Issues Affecting the Mutual Fund Industry Before the Subcommittee on Telecommunications and Finance, Committee on Energy and Commerce, U.S. House of Representatives, 23–25 (Sept. 27, 1994); Testimony of Arthur Levitt, Chairman, U.S. Securities and Exchange Commission, Concerning Municipal Bond and Government Securities Markets Before the Committee on Banking, Housing and Urban Affairs, U.S. Senate, 10–11 (Jan. 5, 1995).

[193] *See* Release 18005, *supra* note 11, at Section II.H. (adopting amendments to Item 1(a)(ix) of Form N–1A).

case, including accrued interest).[194] The rule, as adopted, is available for transactions involving securities that are no longer eligible securities because they no longer satisfy either the credit quality or maturity limiting provisions of the rule (*e.g.*, the securities are long-term adjustable rate securities whose market values no longer approximate their par values on the interest rate readjustment dates).

V. Compliance Dates

A. General Compliance Date

Money funds may comply with any of the amendments or rules adopted today upon publication of this release in the Federal Register. Beginning October 3, 1996, money funds must comply with all amendments and rules adopted today not specifically addressed below in paragraphs B. and C.[195] The Commission is delegating to the Division Director the authority to address issues regarding compliance dates that are not addressed in this section, unless the Director believes that it is necessary in the public interest or in the interest of investors that the Commission consider the issue.

Rule 2a–7 requires funds to meet the rule's diversification requirements with respect to a particular issuer on the date the fund acquires a security of that issuer.[196] Therefore, phase-in rules for the new diversification requirements for tax exempt funds are unnecessary. A tax exempt fund holding a greater percentage of its total assets in the securities of an issuer than the applicable diversification requirement permits as of October 3, 1996 may not purchase additional securities or ''roll over'' current holdings until such securities purchased or rolled over will not cause the fund to exceed the applicable diversification requirements immediately after the purchase or rollover. Funds are not required to exercise puts or otherwise dispose of portfolio holdings to meet the new diversification requirements.

B. Grandfathered Securities

To minimize disruption to funds and markets as a result of adoption of these amendments, the Commission is ''grandfathering'' certain securities first issued on or before June 3, 1996 that do not meet the following requirements of the amended rule:

(1) requirement that demand features be rated;[197]

(2) requirement that, in order for a security subject to a demand feature to be an eligible security, the fund must receive notice from the demand feature's issuer or another institution if there is a substitution of the provider of the demand feature;[198]

(3) new requirements for ABSs regarding maturity determinations and ratings;[199]

(4) revised definition of ''put'' to include ability to recover principal *and* any accrued interest;[200] and

(5) requirement that security subject to conditional demand feature is an eligible security only if board of directors or its delegate makes certain determinations regarding the demand feature's exercisability.[201]

A money fund may continue to hold these ''grandfathered'' securities or acquire such securities provided that they satisfy the other provisions of the rule, as amended, and are issued on or before June 3, 1996.

C. *Disclosure and Reporting*

The following amendments pertaining to disclosure and advertising will become effective as follows:

(1) amendments to Form N–1A will be effective: (1) for investment companies whose registration statements become effective on or after June 3, 1996 upon use of any prospectus on or after June 3, 1996; and (2) for all other investment companies, upon use of any prospectus contained in any post-effective amendment filed on or after June 3, 1996;

(2) amendments to Form N–SAR will be effective for any report required by rules 30a–1 and 30b1–1 [17 CFR 270.30a–1 and 270.30b1–1] filed on or after July 3, 1996; and

(3) the amendment to rule 134 under the Securities Act of 1933 will be effective for ''tombstone'' advertisements used after June 3, 1996.

VI. Regulatory Flexibility Analysis

A summary of the Initial Regulatory Flexibility Analysis regarding the proposed rule and form amendments was published in the Proposing Release. No comments were received. The Commission has prepared a Final Regulatory Flexibility Analysis in accordance with 5 U.S.C. 604, a copy of which may be obtained by contacting Martha H. Platt, Senior Attorney, Mail Stop 10–6, Securities and Exchange Commission, 450 Fifth Street, N.W., Washington, D.C. 20549.

VII. Statutory Authority

The Commission is amending rule 2a–7 under the exemptive and rulemaking authority set forth in sections 6(c) [15 U.S.C. 80a–6(c)], 8(b) [15 U.S.C. 80a–8(b)], 22(c) [15 U.S.C. 80a–22(c)], 34(b) [15 U.S.C. 80a–34(b)], and 38(a) [15 U.S.C. 80a–37(a)] of the Investment Company Act of 1940. The Commission is adopting rule 17a–9 under the exemptive and rulemaking authority set forth in sections 6(c) [15 U.S.C. 80a–6(c)] and 38(a) [15 U.S.C. 80a–37(a)] of the Investment Company Act of 1940. The authority citations for the amendments to the rules and forms precede the text of the amendments.

VIII. Text of Rule and Form Amendments

List of Subjects in 17 CFR Parts 230, 239, 270 and 274

Investment companies, Reporting and recordkeeping requirements, Securities.

For the reasons set out in the preamble, the Commission is amending chapter II, title 17 of the Code of Federal Regulations as follows:

PART 230—GENERAL RULES AND REGULATIONS, SECURITIES ACT OF 1933

1. The authority citation for Part 230 continues to read in part as follows:

Authority: 15 U.S.C. 77b, 77f, 77g, 77h, 77j, 77s, 77sss, 78c, 78d, 78*l*, 78m, 78n, 78o, 78w, 79*ll*(d), 79t, 80a–8, 80a–29, 80a–30, and 80a–37, unless otherwise noted.

* * * * *

2. Section 230.134 is amended by adding paragraph (e) to read as follows:

§ 230.134 Communications not deemed a prospectus.

* * * * *

(e) In the case of an investment company registered under the Investment Company Act of 1940 that holds itself out as a ''money market fund,'' a communication used under

[194] *See* rule 17a–9, as adopted. A fund must notify the Commission in the event of default with respect to portfolio securities that account for one half of one percent or more of a fund's assets immediately before the occurrence of default. *See* paragraph (c)(5)(iii) of rule 2a–7, as amended.

[195] To the extent these amendments involve clarification of Commission or staff interpretations of the current provisions of rule 2a–7, these compliance dates are not intended to suggest that non-compliance prior thereto does not involve a violation of rule 2a–7.

[196] Paragraphs (c)(4) (i) and (ii) (with respect to diversification generally) and (c)(4)(v) (with respect to diversification of puts) of rule 2a–7, as amended.

[197] Paragraph (a)(9)(iii)(D)(*1*) of rule 2a–7, as amended.

[198] Paragraph (a)(9)(iii)(D)(*2*) of rule 2a–7, as amended.

[199] Paragraphs (a)(7)(ii) (definition of demand feature for ABS) and (a)(9)(iii)(C) (rating requirements) of rule 2a–7, as amended. Note, however, that funds are required to apply the diversification requirements for ABS in accordance with Section V.A., *supra*, of this Release. *See also* paragraph (c)(4)(vi)(A)(*4*) of rule 2a–7, as amended (diversification calculation for ABSs).

[200] Paragraph (a)(16) of rule 2a–7, as amended.

[201] Paragraph (c)(3)(iii)(B) of rule 2a–7, as amended.

this section shall contain the disclosure required by § 230.482(a)(7).

PART 270—RULES AND REGULATIONS, INVESTMENT COMPANY ACT OF 1940

3. The authority citation for Part 270 is amended by removing the third paragraph in the sub-authority to read as follows:

Authority: 15 U.S.C. 80a–1 *et seq.*, 80a–37, 80a–39 unless otherwise noted;

* * * * *

4. Section 270.2a–7 is revised to read as follows:

§ 270.2a–7 Money market funds.

(a) *Definitions.*

(1) *Amortized Cost Method* of valuation shall mean the method of calculating an investment company's net asset value whereby portfolio securities are valued at the fund's acquisition cost as adjusted for amortization of premium or accretion of discount rather than at their value based on current market factors.

(2) *Asset Backed Security* shall mean a fixed income security (other than a Government security) issued by a Special Purpose Entity (as hereinafter defined), substantially all of the assets of which consist of Qualifying Assets (as hereinafter defined). *Special Purpose Entity* shall mean a trust, corporation, partnership or other entity organized for the sole purpose of issuing fixed income securities which entitle their holders to receive payments that depend primarily on the cash flow from *Qualifying Assets,* but does not include a registered investment company. Qualifying Assets shall mean financial assets, either fixed or revolving, that by their terms convert into cash within a finite time period, plus any rights or other assets designed to assure the servicing or timely distribution of proceeds to security holders.

(3) *Business Day* shall mean any day, other than Saturday, Sunday, or any customary business holiday.

(4) *Collateralized Fully* in the case of a repurchase agreement shall mean that:

(i) The value of the securities collateralizing the repurchase agreement (reduced by the transaction costs (including loss of interest) that the money market fund reasonably could expect to incur if the seller defaults) is, and during the entire term of the repurchase agreement remains, at least equal to the Resale Price (as defined hereinafter) provided in the agreement; and

(ii) The money market fund or its custodian either has actual physical possession of the collateral or, in the case of a security registered on a book entry system, the book entry is maintained in the name of the money market fund or its custodian; and

(iii) The money market fund retains an unqualified right to possess and sell the collateral in the event of a default by the seller; and

(iv) The collateral consists entirely of securities that are direct obligations of, or that are fully guaranteed as to principal and interest by, the United States or any agency thereof, and/or certificates of deposit, bankers' acceptances which are eligible for acceptance by a Federal Reserve Bank, and, if the seller is a depositary institution as defined in 12 U.S.C. 1813(c), mortgage related securities (as such term is defined in section 3(a)(41) of the Securities Exchange Act of 1934 [15 U.S.C. 78c(a)(41)]) that, at the time the repurchase agreement is entered into, are rated in the highest rating category by the Requisite NRSROs.

(v) *Resale Price* shall mean the purchase price paid to the seller of the securities plus the accrued resale premium on such purchase price. The accrued resale premium shall be the amount specified in the repurchase agreement or the daily amortization of the difference between the purchase price and the resale price specified in the repurchase agreement.

(5) *Conditional Demand Feature* shall mean a Demand Feature that is not an Unconditional Demand Feature.

(6) *Conduit Security* shall mean a security issued by a Municipal Issuer (as hereinafter defined) involving an arrangement or agreement entered into, directly or indirectly, with a person other than a Municipal Issuer, which arrangement or agreement provides for or secures repayment of the security. *Municipal Issuer* shall mean a state or territory of the United States (including the District of Columbia), or any political subdivision or public instrumentality of a state or territory of the United States. A Conduit Security *does not* include a security that is:

(i) Fully and unconditionally guaranteed by a Municipal Issuer; or

(ii) Payable from the general revenues of the Municipal Issuer or other Municipal Issuers (other than those revenues derived from an agreement or arrangement with a person who is not a Municipal Issuer that provides for or secures repayment of the security issued by the Municipal Issuer); or

(iii) Related to a project owned and operated by a Municipal Issuer; or

(iv) Related to a facility leased to and under the control of an industrial or commercial enterprise that is part of a public project which, as a whole, is owned and under the control of a Municipal Issuer.

(7) *Demand Feature* shall mean:

(i) A Put that may be exercised either:

(A) At any time on no more than 30 days' notice; or

(B) At specified intervals not exceeding 397 calendar days and upon no more than 30 days' notice; or

(ii) A feature permitting the holder of an Asset Backed Security unconditionally to receive principal and interest within thirteen months of making demand.

(8) *Demand Feature Issued By A Non-Controlled Person* shall mean a Demand Feature issued by a person that, directly or indirectly, does *not* control, and is not controlled by or under common control with the issuer of the security subject to the Demand Feature. *Control* shall mean ''control'' as defined in section 2(a)(9) of the Act [15 U.S.C. 80a–2(a)(9)].

(9) *Eligible Security* shall mean:

(i) A security with a remaining maturity of 397 calendar days or less that has received a short-term rating (or that has been issued by an issuer that has received a short-term rating with respect to a class of debt obligations, or any debt obligation within that class, that is comparable in priority and security with the security) by the Requisite NRSROs in one of the two highest short-term rating categories (within which there may be sub-categories or gradations indicating relative standing); or

(ii) A security:

(A) That at the time of issuance had a remaining maturity of more than 397 calendar days but that has a remaining maturity of 397 calendar days or less; and

(B) Whose issuer has received from the Requisite NRSROs a rating with respect to a class of debt obligations (or any debt obligation within that class) that is now comparable in priority and security with the security, in one of the two highest short-term rating categories (within which there may be sub-categories or gradations indicating relative standing); or

(iii) An Unrated Security that is of comparable quality to a security meeting the requirements of paragraphs (a)(9)(i) or (ii) of this section, as determined by the money market fund's board of directors; *Provided, however,* that:

(A) The board of directors may base its determination that a Standby Commitment that is not a Demand Feature is an Eligible Security upon a finding that the issuer of the commitment presents a minimal risk of default;

(B) A security that at the time of issuance had a remaining maturity of more than 397 calendar days but that has a remaining maturity of 397 or less and that is an Unrated Security is not an Eligible Security if the security has received a long-term rating from any NRSRO that is not within the NRSRO's three highest long-term ratings categories (within which there may be sub-categories or gradations indicating relative standing);

(C) An Asset Backed Security shall not be an Eligible Security unless it has a debt rating from an NRSRO; and

(D) A security that is subject to a Demand Feature shall not be an Eligible Security unless:

(*1*) The Demand Feature has received a short-term rating from an NRSRO (or the issuer of the Demand Feature has received from an NRSRO a short-term rating with respect to a class of debt obligations or any debt obligation within that class that is comparable in priority and security to the Demand Feature); and

(*2*) The issuer of the Demand Feature, or another institution, undertakes to notify promptly the holder of the security in the event that the Demand Feature is substituted with a Demand Feature provided by another issuer.

(10) *Event of Insolvency* shall mean, with respect to an issuer or guarantor:

(i) An admission of insolvency, the application by the issuer or guarantor for the appointment of a trustee, receiver, rehabilitator, or similar officer for all or substantially all of its assets, a general assignment for the benefit of creditors, the filing by the issuer of a voluntary petition in bankruptcy or application for reorganization or an arrangement with creditors; or

(ii) The institution of similar proceedings by another person which proceedings are not contested by the issuer or guarantor; or

(iii) The institution of similar proceedings by a government agency responsible for regulating the activities of the issuer or guarantor, whether or not contested by the issuer or guarantor.

(11) *First Tier Security* shall mean any Eligible Security that:

(i) Has received a short-term rating (or that has been issued by an issuer that has received a short-term rating with respect to a class of debt obligations, or any debt obligation within that class, that is comparable in priority and security with the security) by the Requisite NRSROs in the highest short-term rating category for debt obligations (within which there may be sub-categories or gradations indicating relative standing); or

(ii) Is a security described in paragraph (a)(9)(ii) of this section whose issuer has received from the Requisite NRSROs a short-term rating with respect to a class of debt obligations (or any debt obligation within that class) that now is comparable in priority and security with the security, in the highest short-term rating category for debt obligations (within which there may be sub-categories or gradations indicating relative standing); or

(iii) Is an Unrated Security that is of comparable quality to a security meeting the requirements of paragraphs (a)(11)(i) and (ii) of this section, as determined by the fund's board of directors; or

(iv) Is a security issued by a registered investment company that is a money market fund; or

(v) Is a Government Security.

(12) *Floating Rate Security* shall mean a security the terms of which provide for the adjustment of its interest rate whenever a specified interest rate changes and which, at any time until the final maturity of the instrument or the period remaining until the principal amount can be recovered through demand, can reasonably be expected to have a market value that approximates its amortized cost.

(13) *Government Security* shall mean any Government Security as defined in section 2(a)(16) of the Act [15 U.S.C. 80a–2(a)(16)].

(14) *NRSRO* shall mean any nationally recognized statistical rating organization, as that term is used in paragraphs (c)(2)(vi)(E), (F) and (H) of § 240.15c3–1 of this Chapter that is not an affiliated person, as defined in section 2(a)(3)(C) of the Act [15 U.S.C. 80a–2(a)(3)(C)], of the issuer of, or any insurer, guarantor or provider of credit support for, the security.

(15) *Penny-Rounding Method* of pricing shall mean the method of computing an investment company's price per share for purposes of distribution, redemption and repurchase whereby the current net asset value per share is rounded to the nearest one percent.

(16) *Put* shall mean a right to sell a specified underlying security or securities within a specified period of time and at an exercise price equal to the amortized cost of the underlying security or securities plus accrued interest, if any, at the time of exercise, that may be sold, transferred or assigned only with the underlying security or securities. A Put will be considered to be from the party to whom the money market fund will look for payment of the exercise price.

(17) *Put Issued by a Non-Controlled Person* shall mean a Put issued by a person that, directly or indirectly, does not control, and is not controlled by or under common control with the issuer of the security subject to the Put. *Control* shall mean ''control'' as defined in section 2(a)(9) of the Act [15 U.S.C 80a–2(a)(9)].

(18) *Refunded Security* shall mean a debt security the principal and interest payments of which are to be paid by Government Securities (''deposited securities'') that have been irrevocably placed in an escrow account pursuant to agreement between the issuer of the debt security and an escrow agent that is not an affiliated person, as defined in section 2(a)(3)(C) of the Act [15 U.S.C. 80a–2(a)(3)(C)], of the issuer of the debt security, and, in accordance with such escrow agreement, are pledged only to the payment of the debt security and, to the extent that excess proceeds are available after all payments of principal, interest, and applicable premiums on the Refunded Securities, the expenses of the escrow agent and, thereafter, to the issuer or another party; *provided* that:

(i) The deposited securities shall not be redeemable prior to their final maturity;

(ii) At the time the deposited securities are placed in the escrow account, an independent certified public accountant shall have certified to the escrow agent that the deposited securities will satisfy all scheduled payments of principal, interest and applicable premiums on the Refunded Securities; and

(iii) The escrow agreement shall prohibit the substitution of the deposited securities unless the substituted securities are Government Securities and, at the time of such substitution, the escrow agent shall have received a certification from an independent certified public accountant substantially the same as that required by paragraph (a)(18)(ii) of this section which certification shall give effect to the substitution.

(19) *Requisite NRSROs* shall mean:

(i) Any two NRSROs that have issued a rating with respect to a security or class of debt obligations of an issuer; or

(ii) If only one NRSRO has issued a rating with respect to such security or class of debt obligations of an issuer at the time the fund purchases or rolls over the security, that NRSRO.

(20) *Second Tier Security* shall mean any Eligible Security that is not a First Tier Security. *Second Tier Conduit Security* shall mean any Conduit Security that is an Eligible Security that is not a First Tier Security.

(21) *Single State Fund* shall mean a Tax Exempt Fund that holds itself out as primarily distributing income exempt

from the income taxes of a specified state or locality.

(22) *Standby Commitment* shall mean a Put that entitles the holder to achieve same day settlement.

(23) *Tax Exempt Fund* shall mean any money market fund that holds itself out as distributing income exempt from regular federal income tax.

(24) *Total Assets* shall mean, with respect to a money market fund using the Amortized Cost Method, the total amortized cost of its assets and, with respect to any other money market fund, the total market-based value of its assets.

(25) *Unconditional Demand Feature* shall mean an Unconditional Put that is also a Demand Feature.

(26) *Unconditional Demand Feature Issued By A Non-Controlled Person* shall mean an Unconditional Put that is also a Demand Feature Issued By A Non-Controlled Person.

(27) *Unconditional Put* shall mean a Put (including any guarantee, financial guarantee (bond) insurance, letter of credit or similar unconditional credit enhancement) that by its terms would be readily exercisable in the event of a default in payment of principal or interest on the underlying security or securities.

(28) *United States Dollar-Denominated* shall mean, with reference to a security, that all principal and interest payments on such security are payable to security holders in United States dollars under all circumstances and that the interest rate of, the principal amount to be repaid, and the timing of payments related to such security do not vary or float with the value of a foreign currency, the rate of interest payable on foreign currency borrowings, or with any other interest rate or index expressed in a currency other than United States dollars.

(29) *Unrated Security* shall mean:

(i) A security with a remaining maturity of 397 calendar days or less issued by an issuer that did not, at the time the security was acquired or rolled over by the fund, have a current short-term rating assigned by any NRSRO:

(A) To the security; or

(B) To the issuer of the security with respect to a class of debt obligations (or any debt obligation within that class) that is comparable in priority and security with the security, or a Demand Feature with respect to the security; and

(ii) A security:

(A) That at the time of issuance had a remaining maturity of more than 397 calendar days but that has a remaining maturity of 397 calendar days or less; and

(B) Whose issuer had not at the time it was acquired or rolled over by the fund received from any NRSRO a short-term rating with respect to a class of debt obligations (or any debt obligation within that class) that now is comparable in priority and security with the security; and

(iii) A security that is a rated security and is the subject of an external credit support agreement (including an arrangement by which the security has become a Refunded Security) that was not in effect when the security (or the issuer) was assigned its rating unless the security has a rating from an NRSRO reflecting the existence of the credit support agreement.

(iv) A security is not an Unrated Security if any debt obligation (*reference security*) that is issued by the same issuer and is comparable in priority and security with that security has a short-term rating by an NRSRO. The status of such security as an Eligible Security or First Tier Security shall be the same as that of the reference security.

(30) *Variable Rate Security* shall mean a security the terms of which provide for the adjustment of its interest rate on set dates (such as the last day of a month or calendar quarter) and which, upon each adjustment until the final maturity of the instrument or the period remaining until the principal amount can be recovered through demand, can reasonably be expected to have a market value that approximates its amortized cost.

(b) *Holding Out.* It shall be an untrue statement of material fact within the meaning of section 34(b) of the Act [15 U.S.C. 80a–33(b)] for a registered investment company, in any registration statement, application, report, account, record, or other document filed or transmitted pursuant to the Act, including any advertisement, pamphlet, circular, form letter, or other sales literature addressed to or intended for distribution to prospective investors that is required to be filed with the Commission by section 24(b) of the Act [15 U.S.C. 80a–24(b)] to:

(1) Adopt the term ''money market'' as part of its name or title or the name or title of any redeemable securities of which it is the issuer; or

(2) Hold itself out to investors as, or adopt a name which suggests that it is, a money market fund or the equivalent of a money market fund, unless such registered investment company meets the conditions of paragraphs (c)(2), (c)(3), and (c)(4) of this section. For purposes of this paragraph, a name which suggests that a registered investment company is a money market fund or the equivalent thereof shall include one which uses such terms as ''cash,'' ''liquid,'' ''money,'' ''ready assets'' or similar terms.

(c) *Share Price Calculations.* The current price per share, for purposes of distribution, redemption and repurchase, of any redeemable security issued by any registered investment company (''money market fund''), notwithstanding the requirements of section 2(a)(41) of the Act [15 U.S.C. 80a–2(a)(41)] and of §§ 270.2a–4 and 270.22c–1 thereunder, may be computed by use of the Amortized Cost Method or the Penny-Rounding Method; *Provided, however,* That:

(1) *Board Findings.* The board of directors of the money market fund shall determine, in good faith, that it is in the best interests of the fund and its shareholders to maintain a stable net asset value per share or stable price per share, by virtue of either the Amortized Cost Method or the Penny-Rounding Method, and that the money market fund will continue to use such method only so long as the board of directors believes that it fairly reflects the market-based net asset value per share.

(2) *Portfolio Maturity.* The money market fund shall maintain a dollar-weighted average portfolio maturity appropriate to its objective of maintaining a stable net asset value per share or price per share; *Provided, however,* That the money market fund will not:

(i) Except as provided in paragraph (c)(2)(ii) of this section, purchase any instrument with a remaining maturity of greater than 397 calendar days; or

(ii) In the case of a money market fund not using the Amortized Cost Method, purchase a Government Security with a remaining maturity of greater than 762 calendar days; or

(iii) Maintain a dollar-weighted average portfolio maturity that exceeds ninety days.

(3) *Portfolio Quality.*

(i) *General.* The money market fund shall limit its portfolio investments, including Puts and repurchase agreements, to those United States Dollar-Denominated securities that the fund's board of directors determines present minimal credit risks (which determination must be based on factors pertaining to credit quality in addition to any rating assigned to such securities by an NRSRO) and which are at the time of acquisition Eligible Securities.

(ii) *Securities Subject to Unconditional Demand Features.* A security that is subject to an Unconditional Demand Feature may be determined to be an Eligible Security or a First Tier Security based solely on

whether the Unconditional Demand Feature is an Eligible Security or First Tier Security, as the case may be.

(iii) *Securities Subject to Conditional Demand Features.* A security that is subject to a Conditional Demand Feature (''Underlying Security'') may be determined to be an Eligible Security or a First Tier Security only if:

(A) The Conditional Demand Feature is an Eligible Security or First Tier Security, as the case may be; and

(B) At the time of the purchase of the Underlying Security, the money market fund's board of directors has determined that there is minimal risk that the circumstances that would result in the Conditional Demand Feature not being exercisable will occur; and

(*1*) The conditions limiting exercise either can be monitored readily by the fund, or relate to the taxability, under federal, state or local law, of the interest payments on the security; or

(*2*) The terms of the Conditional Demand Feature require that the fund will receive notice of the occurrence of the condition and the opportunity to exercise the Demand Feature in accordance with its terms; and

(C) (*1*) If the Underlying Security has a remaining maturity of 397 days or less, the Underlying Security (or the debt securities of issuer of the Underlying Security) has received a short-term rating by the Requisite NRSROs within the NRSROs' two highest short-term ratings categories (within which there may be sub-categories or gradations indicating relative standing) or, if unrated, is determined to be of comparable quality by the money market fund's board of directors; or

(*2*) If the Underlying Security has a remaining maturity of more than 397 calendar days, the Underlying Security (or the debt securities of the issuer of the Underlying Security) has received a long-term rating by the Requisite NRSROs within the NRSROs' two highest long-term rating categories (within which there may be sub-categories or gradations indicating relative standing) or, if unrated, is determined to be of comparable quality by the money market fund's board of directors.

(4) *Portfolio Diversification.*

(i) *Taxable and National Funds.* Immediately after the acquisition of any security (other than a Government Security or a security subject to an Unconditional Demand Feature Issued By a Non-Controlled Person), a money market fund other than a Single State Fund shall not have invested more than five percent of its Total Assets in securities issued by the issuer of the security.

(ii) *Single State Funds.* With respect to 75 percent of its Total Assets, immediately after the acquisition of any security (other than a Government Security or a security subject to an Unconditional Demand Feature Issued By a Non-Controlled Person), a Single State Fund shall not have invested more than five percent of its Total Assets in securities issued by the issuer of the security; *Provided, however,* That a Single State Fund shall not invest more than five percent of its Total Assets in securities issued by the issuer of the security unless the securities are First Tier Securities.

(iii) *Safe Harbor.* Notwithstanding paragraph (c)(4)(i) of this section, a money market fund other than a Single State Fund may invest up to twenty-five percent of its Total Assets in the First Tier Securities of a single issuer for a period of up to three Business days after the purchase thereof.

(iv) *Second Tier Securities.*

(A) *Taxable Funds.* Immediately after the acquisition of any Second Tier Security, a money market fund that is not a Tax Exempt Fund shall not have invested more than:

(*1*) The greater of one percent of its Total Assets or one million dollars in securities issued by that issuer which, when acquired by the money market fund (either initially or upon any subsequent roll over) were Second Tier Securities; and

(*2*) Five percent of its Total Assets in securities which, when acquired by the money market fund (either initially or upon any subsequent roll over) were Second Tier Securities.

(B) *Tax Exempt Funds.* Immediately after the acquisition of any Second Tier Conduit Security that is not subject to an Unconditional Demand Feature Issued By a Non-Controlled Person, a money market fund that is a Tax Exempt Fund shall not have invested more than:

(*1*) The greater of one percent of its Total Assets or one million dollars in securities issued by that issuer which, when acquired by the money market fund (either initially or upon any subsequent roll over) were Second Tier Conduit Securities not subject to an Unconditional Demand Feature Issued By a Non-Controlled Person; and

(*2*) Five percent of its Total Assets in Conduit Securities which, when acquired by the money market fund (either initially or upon any subsequent roll over) were Second Tier Conduit Securities not subject to an Unconditional Demand Feature Issued By a Non-Controlled Person.

(v) *Puts.*

(A) *General.* Immediately after the acquisition of any Put or security subject to a Put, with respect to seventy-five percent of the assets of a money market fund, no more than ten percent of the fund's Total Assets may be invested in securities issued by or subject to Puts from the institution that issued the Put, subject to sections (c)(4)(v)(B) and (C) of this section.

(B) *Second Tier Puts.* Immediately after the acquisition of any Put (or a security after giving effect to the Put) that is a Second Tier Security, a money market fund shall not have invested more than five percent of its Total Assets in securities issued by or subject to Puts from the institution that issued the Put.

(C) *Puts Issued by Non-Controlled Persons.* Immediately after the acquisition of any security subject to a Put, a money market fund shall not have invested more than ten percent of its Total Assets in securities issued by, or subject to Puts from the institution that issued the Put, unless, with respect to any security subject to Puts from that institution, the Put is a Put Issued By a Non-Controlled Person.

(iv) *Diversification Calculations.*

(A) *General.* For purposes of making calculations under paragraphs (c)(4)(i) through (iv) of this section:

(*1*) *Repurchase Agreements.* The acquisition of a repurchase agreement may be deemed to be an acquisition of the underlying securities, provided that the obligation of the seller to repurchase the securities from the money market fund is Collateralized Fully.

(*2*) *Refunded Securities.* The acquisition of a Refunded Security shall be deemed to be an acquisition of a Government Security.

(*3*) *Conduit Securities.* A Conduit Security shall be deemed to be issued by the issuer (other than the Municipal Issuer) ultimately responsible for payments of interest and principal on the security.

(*4*) *Asset Backed Securities.* An Asset Backed Security shall be deemed to be issued by the Special Purpose Entity that issued the Asset Backed Security, *Provided, however,* any person whose obligations constitute ten percent or more of the principal amount of the Qualifying Assets shall be deemed to be an issuer of the portion of the Asset Backed Security such obligations represent. For purposes of the foregoing, if the Qualifying Assets held by the Special Purpose Entity are themselves Asset Backed Securities (''Secondary Asset Backed Securities''), then the Special Purpose Entity shall be treated as holding directly the Secondary Asset Backed Securities.

(*5*) *Shares in Master Funds.* A money market fund substantially all of the

assets of which consist of shares of another money market fund acquired in reliance on section 12(d)(1)(E) of the Act [15 U.S.C. 80a–12(d)(1)(E)] shall be deemed to be in compliance with this section if the board of directors reasonably believes that the money market fund in which it has invested is in compliance with this section.

(B) *Put Diversification Calculations.* In making calculations under the Put diversification requirements of paragraph (c)(4)(v) of this section, the following rules apply:

(*1*) *Issuer-Provided Puts.* In the case of a security subject to a Put from the same institution that issued the underlying security, the value of the securities subject to the Put may be excluded from the Put diversification requirements of paragraph (c)(4)(v) of this section.

(*2*) *Fractional Puts.* In the case of a security subject to a Put from an institution by which the institution guarantees a specified portion of the value of the security, the institution shall be deemed to guarantee the specified portion thereof, *Provided, however,* if the security is an Asset Backed Security and the Put is a guarantee of all or a portion of the first losses with respect to the security, the institution providing the Put shall be deemed to have guaranteed the entire principal amount of the security.

(*3*) *Layered Puts.* In the case of a security subject to Puts from multiple institutions that have not limited the extent of their obligations as described in paragraph (c)(4)(vi)(B)(*2*) of this section, each institution shall be deemed to have guaranteed the entire principal amount of the security, *Provided, however,* in the case of a security subject to an Unconditional Demand Feature and a Put (or Puts) that is not a Demand Feature, the Put diversification requirements of paragraph (c)(4)(v) of this section need only be satisfied as to the institution issuing the Unconditional Demand Feature.

(*4*) *Puts Not Relied Upon.* If the fund's board of directors determines that the fund is not relying on a Put to determine the quality (pursuant to paragraphs (c)(3)(ii) or (c)(3)(iii) of this section), or maturity (pursuant to paragraph (d) of this section), or liquidity of the portfolio security and maintains a record of this determination (pursuant to paragraphs (c)(8)(ii) and (c)(9)(vi) of this section), the Put diversification requirements of paragraph (c)(4)(v) of this section need not be satisfied as with respect to such put.

(vii) *Diversification Safe Harbor.* A money market fund that satisfies the applicable diversification requirements of paragraph (c)(4) of this section shall be deemed to have satisfied the diversification requirements of section 5(b)(1) of the Act [15 U.S.C. 80a–5(b)(1)] and the rules adopted thereunder.

(5) *Downgrades, Defaults and Other Events.*

(i) *Downgrades.*

(A) *General.* Upon the occurrence of either of the events specified in paragraphs (c)(5)(i)(A)(*1*) and (*2*) of this section with respect to a portfolio security, the board of directors of the money market fund shall reassess promptly whether such security continues to present minimal credit risks and shall cause the fund to take such action as the board of directors determines is in the best interests of the money market fund and its shareholders:

(*1*) A portfolio security of a money market fund ceases to be a First Tier Security (either because it no longer has the highest rating from the Requisite NRSROs or, in the case of an Unrated Security, the board of directors of the money market fund determines that it is no longer of comparable quality to a First Tier Security); and

(*2*) The money market fund's investment adviser (or any person to whom the fund's board of directors has delegated portfolio management responsibilities) becomes aware that any Unrated Security or Second Tier Security held by the money market fund has, since the security was acquired by the fund, been given a rating by any NRSRO below the NRSRO's second highest rating category.

(B) *Securities To Be Disposed Of.* The reassessments required by paragraph (c)(5)(i)(A) of this section shall not be required if, in accordance with the procedures adopted by the board of directors, the security is disposed of (or matures) within five Business days of the specified event and, in the case of events specified in paragraph (c)(5)(i)(A)(*2*) of this section, the board is subsequently notified of the adviser's actions.

(C) *Special Rule for Certain Securities Subject to Demand Features.* In the event that after giving effect to a rating downgrade, more than five percent of the fund's Total Assets are invested in securities issued by or subject to Demand Features from a single institution that are Second Tier Securities, the board of directors (or its delegate) shall cause the fund to reduce its investment in securities issued by or subject to Demand Features from that institution to no more than five percent of its Total Assets by exercising the Demand Features at the next succeeding exercise date(s), absent a finding by the board of directors that disposal of the portfolio security would not be in the best interests of the money market fund.

(ii) *Defaults and Other Events.* Upon the occurrence of any of the events specified in paragraphs (c)(5)(ii)(A) through (D) of this section with respect to a portfolio security, the money market fund shall dispose of such security as soon as practicable consistent with achieving an orderly disposition of the security, by sale, exercise of any Demand Feature or otherwise, absent a finding by the board of directors that disposal of the portfolio security would not be in the best interests of the money market fund (which determination may take into account, among other factors, market conditions that could affect the orderly disposition of the portfolio security):

(A) The default with respect to a portfolio security (other than an immaterial default unrelated to the financial condition of the issuer);

(B) A portfolio security ceases to be an Eligible Security;

(C) A portfolio security has been determined to no longer present minimal credit risks; or

(D) An Event of Insolvency occurs with respect to the issuer of or the provider of any Put with respect to a portfolio security other than a Put with respect to which a non-reliance determination has been made pursuant to paragraph (c)(4)(vi)(B)(4) of this section.

(iii) *Notice to the Commission.* In the event of a default with respect to one or more portfolio securities (other than an immaterial default unrelated to the financial condition of the issuer) or an Event of Insolvency with respect to the issuer of the security or any Put to which it is subject, where immediately before default the securities (or the securities subject to the Put) accounted for ½ of 1 percent or more of a money market fund's Total Assets, the money market fund shall promptly notify the Commission of such fact and the actions the money market fund intends to take in response to such situation. Notification under this paragraph shall be made telephonically or by means of a facsimile transmission, followed by letter sent by first class mail, directed to the attention of the Director of the Division of Investment Management.

(iv) *Defaults for Purposes of Paragraphs (c)(5)(ii) and (iii).* For purposes of paragraphs (c)(5)(ii) and (iii) of this section, an instrument subject to a Demand Feature or unconditional credit enhancement shall not be deemed to be in default (and an Event of Insolvency with respect to the security

shall not be deemed to have occurred) if:

(A) In the case of an instrument subject to a Demand Feature, the Demand Feature has been exercised and the fund has recovered either the principal amount or the amortized cost of the instrument, plus accrued interest; or

(B) The provider of the credit enhancement is continuing, without protest, to make payments as due on the instrument.

(6) *Required Procedures: Amortized Cost Method*. In the case of a money market fund using the Amortized Cost Method:

(i) *General*. In supervising the money market fund's operations and delegating special responsibilities involving portfolio management to the money market fund's investment adviser, the money market fund's board of directors, as a particular responsibility within the overall duty of care owed to its shareholders, shall establish written procedures reasonably designed, taking into account current market conditions and the money market fund's investment objectives, to stabilize the money market fund's net asset value per share, as computed for the purpose of distribution, redemption and repurchase, at a single value.

(ii) *Specific Procedures*. Included within the procedures adopted by the board of directors shall be the following:

(A) *Shadow Pricing*. Written procedures shall provide:

(*1*) That the extent of deviation, if any, of the current net asset value per share calculated using available market quotations (or an appropriate substitute which reflects current market conditions) from the money market fund's amortized cost price per share, shall be calculated at such intervals as the board of directors determines appropriate and reasonable in light of current market conditions;

(*2*) For the periodic review by the board of directors of the amount of the deviation as well as the methods used to calculate the deviation; and

(*3*) For the maintenance of records of the determination of deviation and the board's review thereof.

(B) *Prompt Consideration of Deviation*. In the event such deviation from the money market fund's amortized cost price per share exceeds ½ of 1 percent, the board of directors shall promptly consider what action, if any, should be initiated by the board of directors.

(C) *Material Dilution or Unfair Results*. Where the board of directors believes the extent of any deviation from the money market fund's amortized cost price per share may result in material dilution or other unfair results to investors or existing shareholders, it shall cause the fund to take such action as it deems appropriate to eliminate or reduce to the extent reasonably practicable such dilution or unfair results.

(7) *Required Procedures: Penny-Rounding Method*. In the case of a money market fund using the Penny-Rounding Method, in supervising the money market fund's operations and delegating special responsibilities involving portfolio management to the money market fund's investment adviser, the money market fund's board of directors undertakes, as a particular responsibility within the overall duty of care owed to its shareholders, to assure to the extent reasonably practicable, taking into account current market conditions affecting the money market fund's investment objectives, that the money market fund's price per share as computed for the purpose of distribution, redemption and repurchase, rounded to the nearest one percent, will not deviate from the single price established by the board of directors.

(8) *Specific Procedures: Amortized Cost and Penny-Rounding Methods*. Included within the procedures adopted by the board of directors for money market funds using either the amortized cost or penny-rounding methods shall be the following:

(i) *Securities for Which Maturity is Determined by Reference to Demand Features*. In the case of a security for which maturity is determined by reference to a Demand Feature, written procedures shall require ongoing review of the security's continued minimal credit risks, which review must be based on, among other things, financial data for the most recent fiscal year of the issuer of the Demand Feature and, in the case of a security subject to a Conditional Demand Feature, the issuer of the security, whether such data is publicly available or provided under the terms of the security's governing documentation.

(ii) *Securities Subject to Puts*. In the case of a security subject to one or more Puts, written procedures shall require periodic evaluation of the determination described in paragraph (c)(4)(vi)(B)(*4*)(puts not relied upon) of this section.

(iii) *Adjustable Rate Securities Without Demand Features*. In the case of a Variable Rate or Floating Rate Security that does not have a Demand Feature and for which maturity is determined pursuant to paragraphs (d)(1), (d)(2) or (d)(4) of this section, written procedures shall require periodic review of whether the security, upon readjustment of its interest rate, can reasonably be expected to have a market value that approximates its amortized cost.

(iv) *Asset Backed Securities*. In the case of an Asset Backed Security, written procedures shall require the fund to periodically determine whether a person other than the Special Purpose Entity is the issuer of all or a portion of the Asset Backed Security for purposes of paragraph (c)(4)(vi)(A)(*4*) of this section.

(9) *Record Keeping and Reporting*.

(i) *Written Procedures*. For a period of not less than six years following the replacement of such procedures with new procedures (the first two years in an easily accessible place), a written copy of the procedures (and any modifications thereto) described in paragraphs (c)(5) through (c)(8) and (e) of this section shall be maintained and preserved.

(ii) *Board Considerations and Actions*. For a period of not less than six years (the first two years in an easily accessible place) a written record shall be maintained and preserved of the board of directors' considerations and actions taken in connection with the discharge of its responsibilities, as set forth in this section, to be included in the minutes of the board of directors' meetings.

(iii) *Credit Risk Analysis*. For a period of not less than three years from the date that the credit risks of a portfolio security were most recently reviewed in accordance with paragraph (c)(8)(i) of this section, a written record of the determination that a portfolio security presents minimal credit risks and the NRSRO ratings (if any) used to determine the status of the security as an Eligible Security, First Tier Security or Second Tier Security shall be maintained and preserved in an easily accessible place.

(iv) *Determinations With Respect to Adjustable Rate Securities*. For a period of not less than three years from the date when the determination was most recently made, a written record shall be preserved and maintained, in an easily accessible place, of the determination required by paragraph (c)(8)(iii) of this section (that a Variable Rate or Floating Rate Security that does not have a Demand Feature and for which maturity is determined pursuant to paragraphs (d)(1), (d)(2) or (d)(4) of this section can reasonably be expected, upon readjustment of its interest rate at all times during the life of the instrument, to have a market value that approximates its amortized cost).

(v) *Determinations with Respect to Asset Backed Securities.* For a period of not less than three years from the date when the determination was most recently made, a written record shall be preserved and maintained, in an easily accessible place, of the determination required by paragraph (c)(8)(iv) of this section (whether a person other than the Special Purpose Entity is the issuer of all or a portion of an Asset Backed Security pursuant to paragraph (c)(vi)(4) of this section). The written record shall include the identities of the issuers of the Qualifying Assets whose obligations constitute ten percent or more of the principal value of the Qualifying Assets, the percentage of the Qualifying Assets constituted by the securities of each such issuer and the percentage of the fund's Total Assets that are invested in securities of each such issuer.

(vi) *Evaluations with Respect to Securities Subject to Puts.* For a period of not less than three years from the date when the evaluation was most recently made, a written record shall be preserved and maintained, in an easily accessible place, of the evaluation required by paragraph (c)(8)(ii) (regarding securities subject to one or more Puts) of this section.

(vii) Inspection of Records. The documents preserved pursuant to this paragraph (c)(9) shall be subject to inspection by the Commission in accordance with section 31(b) of the Act [15 U.S.C. 80a–30(b)] as if such documents were records required to be maintained pursuant to rules adopted under section 31(a) of the Act [15 U.S.C. 80a–30(a)]. If any action was taken under paragraphs (c)(5)(ii) (with respect to defaulted securities and events of insolvency) or (c)(6)(ii) (with respect to a deviation from the fund's share price of more than ½ of 1 percent) of this section, the money market fund will file an exhibit to the Form N–SAR [17 CFR 274.101] filed for the period in which the action was taken describing with specificity the nature and circumstances of such action. The money market fund will report in an exhibit to such Form any securities it holds on the final day of the reporting period that are not Eligible Securities.

(d) *Maturity of Portfolio Securities.* For purposes of this section, the maturity of a portfolio security shall be deemed to be the period remaining (calculated from the trade date or such other date on which the fund's interest in the security is subject to market action) until the date on which, in accordance with the terms of the security, the principal amount must unconditionally be paid, or in the case of a security called for redemption, the date on which the redemption payment must be made, except as provided in paragraphs (d)(1) through (8) of this section:

(1) *Adjustable Rate Government Securities.* A Government Security which is a Variable Rate Security where the variable rate of interest is readjusted no less frequently than every 762 days shall be deemed to have a maturity equal to the period remaining until the next readjustment of the interest rate. A Government Security which is a Floating Rate Security shall be deemed to have a remaining maturity of one day.

(2) *Short-Term Variable Rate Securities.* A Variable Rate Security, the principal amount of which, in accordance with the terms of the security, must unconditionally be paid in 397 calendar days or less shall be deemed to have a maturity equal to the earlier of the period remaining until the next readjustment of the interest rate or the period remaining until the principal amount can be recovered through demand.

(3) *Long-Term Variable Rate Securities.* A Variable Rate Security, the principal amount of which is scheduled to be paid in more than 397 days, that is subject to a Demand Feature shall be deemed to have a maturity equal to the longer of the period remaining until the next readjustment of the interest rate or the period remaining until the principal amount can be recovered through demand.

(4) *Short-Term Floating Rate Securities.* A Floating Rate Security, the principal amount of which, in accordance with the terms of the security, must unconditionally be paid in 397 calendar days or less shall be deemed to have a maturity of one day.

(5) *Long-Term Floating Rate Securities.* A Floating Rate Security, the principal amount of which is scheduled to be paid in more than 397 days, that is subject to a Demand Feature, shall be deemed to have a maturity equal to the period remaining until the principal amount can be recovered through demand.

(6) *Repurchase Agreements.* A repurchase agreement shall be deemed to have a maturity equal to the period remaining until the date on which the repurchase of the underlying securities is scheduled to occur, or, where the agreement is subject to demand, the notice period applicable to a demand for the repurchase of the securities.

(7) *Portfolio Lending Agreements.* A portfolio lending agreement shall be treated as having a maturity equal to the period remaining until the date on which the loaned securities are scheduled to be returned, or where the agreement is subject to demand, the notice period applicable to a demand for the return of the loaned securities.

(8) *Money Market Fund Securities.* An investment in a money market fund shall be treated as having a maturity equal to the period of time within which the acquired money market fund is required to make payment upon redemption, unless the acquired money market fund has agreed in writing to provide redemption proceeds to the investing money market fund within a shorter time period, in which case the maturity of such investment shall be deemed to be the shorter period.

(e) *Delegation.* The money market fund's board of directors may delegate to the fund's investment adviser or officers the responsibility to make any determination required to be made by the board of directors under this section (other than the determinations required by paragraphs (c)(1), (c)(5)(i)(C), (c)(5)(ii), (c)(6)(i), (c)(6)(ii)(A), (B), and (C), and (c)(7) of this section) provided:

(1) *Written Guidelines.* The Board shall establish and periodically review written guidelines (including guidelines for determining whether securities present minimal credit risks as required in paragraph (c)(3) of this section) and procedures under which the delegate makes such determinations:

(2) *Oversight.* The Board shall exercise adequate oversight (through periodic reviews of fund investments and the delegate's procedures in connection with investment decisions and prompt review of the adviser's actions in the event of the default of a security or Event of Insolvency with respect to the issuer of the security or any Put to which it is subject that requires notification of the Commission under paragraph (c)(5)(iii) of this section) to assure that the guidelines and procedures are being followed.

5. Section 270.2a41–1 is amended by revising paragraph (a) introductory text to read as follows:

§ 270.2a41–1 Valuation of standby commitments by registered investment companies.

(a) A standby commitment as defined in § 270.2a–7(a)(22) may be assigned a fair value of zero, Provided, That:

* * * * *

6. Section 270.12d3–1 is amended by revising paragraph (d)(7)(v) to read as follows:

§ 270.12d3–1 Exemption of acquisitions of securities issued by persons engaged in securities related businesses.

* * * * *

(d) * * *

(7) * * *

(v) Acquisition of Puts, as defined in § 270.2a–7(a)(16), provided that, immediately after the acquisition of any Put, the company will not, with respect to 75 percent of the total value of its assets, have invested more than ten percent of the total value of its assets in securities underlying Puts from the same institution. For the purposes of this section, a Put will be considered to be from the party to whom the company will look for payment of the exercise price.

* * * * *

7. Section 270.17a–9 is added to read as follows:

§ 270.17a–9 Purchase of certain securities from a money market fund by an affiliate, or an affiliate of an affiliate.

The purchase of a security that is no longer an Eligible Security (as defined in paragraph (a)(9) of § 270.2a–7) from an open-end investment company holding itself out as a ''money market'' fund shall be exempt from section 17(a) of the Act [15 U.S.C. 80a–17(a)], provided that:

(a) The purchase price is paid in cash; and

(b) The purchase price is equal to the greater of the amortized cost of the security or its market price (in each case, including accrued interest).

8. Section 270.31a–1 is amended by adding a sentence to the end of paragraph (b)(1) to read as follows:

§ 270.31a–1 Records to be maintained by registered investment companies, certain majority-owned subsidiaries thereof, and other persons having transactions with registered investment companies.

* * * * *

(b) * * *

(1) * * * In the case of a money market fund, also identify the provider of any put (as defined in § 270.2a–7(a)(16)) or guarantee with respect to a portfolio security and give a brief description of the nature of the put (*e.g.*, unconditional demand feature, conditional demand feature, guarantee, letter of credit, or bond insurance) and, in a subsidiary portfolio investment record, provide the complete legal name and accounting and other information (including sufficient information to calculate coupons, accruals, maturities, puts, and calls) necessary to identify, value, and account for each investment.

* * * * *

PART 239—FORMS PRESCRIBED UNDER THE SECURITIES ACT OF 1933

PART 274—FORMS PRESCRIBED UNDER THE INVESTMENT COMPANY ACT OF 1940

9. The authority citation for part 239 continues to read, in part, as follows:

Authority: 15 U.S.C. 77f, 77g, 77h, 77j, 77s, 77sss, 78c, 78*l*, 78m, 78n, 78o(d), 78w(a), 78*ll*(d), 79e, 79f, 79g, 79j, 79*l*, 79m, 79n, 79q, 79t, 80a–8, 80a–29, 80a–30 and 80a–37, unless otherwise noted.

* * * * *

10. The authority citation for Part 274 continues to read as follows:

Authority: 15 U.S.C. 77f, 77g, 77h, 77j, 77s, 78c(b), 78*l*, 78m, 78n, 78o(d), 80a–8, 80a–24, and 80a–29, unless otherwise noted.

Note: Form N–1A does not and the amendments will not appear in the Code of Federal Regulations.

§§ 239.15A and 274.11A [Amended]

11. Form N–1A (referenced in 17 CFR 239.15A and 274.11A) is amended by redesignating paragraph (a)(vii) as paragraph (a)(viii) and by adding paragraph (a)(vii) and an instruction to the end of paragraph (a)(vii) of Part A, Item 1 to read as follows:

FORM N–1A

* * * * *

PART A—INFORMATION REQUIRED IN A PROSPECTUS

* * * * *

Item 1. Cover Page

* * * * *

(vii) In the case of a Registrant that holds itself out as a money market fund primarily distributing income exempt from the income taxes of a specified state or locality (''single state fund''), a prominent statement that the registrant may invest a significant percentage of its assets in a single issuer, and that therefore investment in the Registrant may be riskier than an investment in other types of money market funds.

Instruction: The disclosure required for money market funds by Item 1(a)(vii) may be omitted if the registrant limits investment in a single issuer to five percent of fund assets as to 100 percent of assets.

* * * * *

§§ 239.15A and 274.11A [Amended]

12. Form N–1A (referenced in 17 CFR 239.15A and 274.11A) is amended by adding a sentence and an Instruction to the end of paragraph (c) of Part A, Item 4 to read as follows:

FORM N–1A

* * * * *

PART A—INFORMATION REQUIRED IN A PROSPECTUS

* * * * *

Item 4. General Description of Registrant

* * * * *

(c) * * * In the case of a Registrant that holds itself out as a money market fund primarily distributing income exempt from the income taxes of a specified state or locality (''single state fund''), a prominent statement that the registrant is concentrated in securities issued by the state or entities within the state and that therefore investment in the Registrant may be riskier than an investment in other types of money market funds.

* * * * *

Note: Form N–3 does not and the amendments will not appear in the Code of Federal Regulations.

§§ 239.17a and 274.11b [Amended]

13. Form N–3 (referenced in 17 CFR 239.17a and 274.11b) is amended by adding Instruction 11.e. to Part A, paragraph (a) of Item 4 to read as follows:

FORM N–3

* * * * *

PART A—INFORMATION REQUIRED IN A PROSPECTUS

* * * * *

Item 4. Condensed Financial Information

(a) * * *

Instructions

11. The portfolio turnover rate to be shown at caption 10 shall be calculated as follows:

* * * * *

e. A registrant that holds itself out as a money market fund is not required to provide a portfolio turnover rate in response to this Item.

* * * * *

Note: Form N–SAR does not and the amendments will not appear in the Code of Federal Regulations.

§ 274.101 [Amended]

14. Form N–SAR (referenced in 17 CFR 274.101) is amended by revising the definition of ''Money Market Fund'' in General Instruction G to read as follows:

FORM N–SAR

* * * * *

GENERAL INSTRUCTIONS

* * * * *

G. Definitions

* * * * *

Money Market Fund: The term ''money market fund'' shall mean any open-end fund that meets the maturity, quality and diversification conditions of paragraphs (c)(2), (c)(3), and (c)(4) of rule 2a–7 [17 CFR 270.2a–7].

* * * * *

15. Form N–SAR (referenced in 17 CFR 274.101) is amended by revising the last sentence of the Instruction to Item 63 to read as follows:

FORM N–SAR

* * * * *

Instructions to Specific Items

* * * * *

ITEM 63: Dollar weighted average maturity

* * * A money market fund shall determine the weighted average portfolio maturity in the same manner as it would in monitoring compliance with the average portfolio maturity provisions of rule 2a–7.

16. Form N–SAR (referenced in 17 CFR 274.101) is amended by adding a sentence at the end of the first paragraph of the Instruction to Item 71 to read as follows:

FORM N–SAR

* * * * *

Instructions to Specific Items

* * * * *

ITEM 71: Portfolio turnover rate

* * * A money market fund should enter a portfolio turnover rate of ''0'' even if it owns securities that have maturities in excess of one year.

* * * * *

17. Guide 21 (Disclosure of Risk Factors) to Form N–1A (referenced in 17 CFR 239.15A and 274.11A) is amended by adding a paragraph to the end of the Guide to read as follows:

Guide 21. Disclosure of Risk Factors

* * * * *

In many cases, a substantial portion of the portfolio securities held by tax exempt money market funds is supported by credit and liquidity enhancements from third parties, generally letters of credit from foreign or domestic banks. These securities include variable rate demand notes, tender or ''put'' bonds and similar securities. Where more than forty percent of a money market fund registrant's portfolio consists, or is likely to consist, of securities subject to these features, the registrant should, in response to Item 4, state that, because the fund invests in securities backed by banks and other financial institutions, changes in the credit quality of these institutions could cause losses to the fund and effect its share price.

§§ 239.15A and 274.11A [Amended]

18. Guide 35 is added to Form N–1A (referenced in 17 CFR 239.15A and 274.11A] to read as follows:

Guide 35. Money Market Fund Investments in Other Money Market Funds.

Money market funds are permitted to invest in the securities of other money market funds in accordance with the provisions of rule 2a–7 and section 12(d)(1) of the 1940 Act. Except when a fund has invested substantially all of its assets in the other money market fund, the investing fund does not need to ''look through'' the shares of the fund(s) in which it is investing in order to determine compliance with the diversification or Second Tier Security limitations of rule 2a–7.[45] However, the investment objectives and policies of the money market fund making the investment and the money market fund(s) in which it is investing should not be inconsistent. Paragraph (c)(4)(iv)(A)(5) of rule 2a–7 describes the obligations of a fund that invests substantially all of its asset in another money market fund.

§§ 239.17a and 274.11b [Amended]

19. Guide 38 is added to Form N–3 (referenced in 17 CFR 239.17a and 274.11b) to read as follows:

Guide 38. Money Market Fund Investments in Other Money Market Funds

Money market funds are permitted to invest in the securities of other money market funds in accordance with the provisions of rule 2a–7 and section 12(d)(1) of the 1940 Act. Except when a fund has invested substantially all of its assets in the other money market fund, the investing fund does not need to ''look through'' the shares of the fund(s) in which it is investing in order to determine compliance with the diversification or Second Tier Security limitations of rule 2a–7.[45] However, the investment objectives and policies of the money market fund making the investment and the money market fund(s) in which it is investing should not be inconsistent. Paragraph (c)(4)(v)(A)(5) of rule 2a–7 describes the obligations of a fund that invests substantially all of its assets in another money market fund.

By the Commission.

Margaret H. McFarland,

Deputy Secretary.

Dated: March 21, 1996.

[FR Doc. 96–7334 Filed 3–27–96; 8:45 am]

BILLING CODE 8010–01–P

[45] See Investment Company Act Rel. No. 21837 (March 21, 1996) at Section II.G.2.

[45] See Investment Company Act Rel. No. 21837 (March 21, 1996) at Section II.G.2.

federal register

Thursday
March 28, 1996

Part V

Department of Housing and Urban Development

24 CFR Part 261, et al.

Consolidated Drug Elimination Program Requirements for Assisted Housing and Public Housing; Final Rule

DEPARTMENT OF HOUSING AND URBAN DEVELOPMENT

Office of the Secretary

24 CFR Parts 261, 761, and 961

[Docket No. FR–3997–F–01]

RIN 2501–AC18

Consolidated Drug Elimination Program Requirements for Assisted Housing and Public Housing

AGENCY: Office of the Secretary, HUD.

ACTION: Final rule.

SUMMARY: This final rule consolidates and streamlines HUD's regulations for the Assisted Housing Drug Elimination Program and the Public Housing Drug Elimination Program. This rule is part of HUD's efforts to comply with the President's regulatory reform initiatives. Since the requirements for the two programs are very similar, this consolidation will eliminate redundant and unnecessary provisions in HUD's regulations.

EFFECTIVE DATE: April 29, 1996.

FOR FURTHER INFORMATION CONTACT: *For questions concerning the Assisted Housing Drug Elimination Program (AHDEP), contact:* Michael E. Diggs, Office of Multifamily Housing Programs, Office of Housing, Room 6130, telephone number (202) 708–0614, ext. 2514.

For questions concerning the Public Housing Drug Elimination Program (PHDEP), contact: Malcolm E. (Mike) Main, Crime Prevention and Security Division, Office of Community Relations and Involvement, Office of Public and Indian Housing, Room 4116, telephone (202) 708–1197, ext. 4232.

The address for the above persons is: Department of Housing and Urban Development, 451 Seventh Street, SW., Washington, DC 20410. Hearing- or speech-impaired persons may call (800) 877–8339 (Federal Information Relay Service TDD). (Except for the ''800'' number, these telephone numbers are not toll-free.)

SUPPLEMENTARY INFORMATION:

I. Background

The Public Housing Drug Elimination Program was first authorized by chapter 2, subtitle C, title V of the Anti-Drug Abuse Act of 1988 (42 U.S.C. 11901–11908). The purpose of the Drug Elimination Program is to make grants for use in eliminating drug-related crime and the problems associated with it. HUD first issued implementing regulations for this program in 24 CFR part 961 on July 3, 1990 (55 FR 27598). Under this original authorization, public housing agencies (PHAs) and Indian housing authorities (IHAs) were eligible to apply for and receive grants under the program. (IHAs and PHAs will be collectively referred to as HAs.)

Section 581 of the National Affordable Housing Act (NAHA) (Pub. L. 101–625, approved November 28, 1990) amended the Public Housing Drug Elimination Program in a number of ways, and HUD implemented these amendments through a final rule published on January 7, 1993 (58 FR 3160). As described in the preamble to the January 7, 1993 final rule, that rule also implemented two amendments to the program from the Housing and Community Development Act of 1992 (Pub. L. 102–550, approved October 28, 1992).

In addition to enhancing the Public Housing Drug Elimination Program, the National Affordable Housing Act included the authorization for the Assisted Housing Drug Elimination Program. Under the Assisted Housing Program, HUD can provide grants to private for-profit and nonprofit owners of Federally assisted low-income housing. For purposes of the Assisted Housing Drug Elimination Program, NAHA also permits HUD to establish other criteria, in addition to those applicable to the Public Housing Drug Elimination Program, for the evaluation of funding applications submitted by owners of Federally assisted low-income housing. HUD issued a final rule implementing the Assisted Housing Drug Elimination Program on January 26, 1995 (60 FR 5280). The January 26, 1995 final rule followed the regulations for the Public Housing Drug Elimination Program very closely. The main difference from the Public Housing Program's regulations reflected the flexibility in the submission requirements and eligible activities provided by NAHA for the Assisted Housing Program.

II. Regulatory Reinvention

In response to Executive Order 12866 and President Clinton's memorandum of March 4, 1995 to all Federal departments and agencies on the subject of regulatory reinvention, HUD has reviewed all its regulations to determine whether certain regulations can be eliminated, streamlined, or consolidated with other regulations. As part of this review, HUD determined that the regulations for the Assisted Housing Drug Elimination Program and the Public Housing Drug Elimination Program are very similar, and HUD can consolidate them into one part.

Therefore, this final rule will consolidate the regulations in parts 261 (Assisted Housing Drug Elimination Program) and 961 (Public Housing Drug Elimination Program), into one set of regulations in part 761 (in chapter VII of title 24 of the Code of Federal Regulations (CFR)). Chapter VII of HUD's regulations is an appropriate place for the Drug Elimination Program regulations, since that chapter has historically contained those regulations common to programs under the authority of the Assistant Secretary for Housing—Federal Housing Commissioner (such as the Assisted Housing Drug Elimination Program) and to programs under the authority of the Assistant Secretary for Public and Indian Housing (such as the Public Housing Drug Elimination Program).

This final rule also streamlines the Drug Elimination Program regulations to the extent possible. For example, some of the provisions merely repeat language in the authorizing statute (42 U.S.C. 11901–11908). It is unnecessary to maintain statutory requirements in the CFR, since those requirements are otherwise fully accessible and binding. Furthermore, if regulations contain statutory language, HUD must amend the regulations whenever Congress amends the statute. Therefore, this final rule will remove repetitious statutory language and replace it with a citation to the specific statutory section for easy reference.

This rule also removes information in the regulations that is nonregulatory and would more appropriately appear in the separate Notices of Funding Availability (NOFAs) for the two programs, such as details about the selection criteria and examples of eligible activities. This final rule streamlines the regulations to provide that specific information on these topics will be included in the annual NOFAs.

Specifically, this final rule accomplishes the following:

1. Consolidates the regulations from parts 261 and 961 into part 761;

2. Removes the definitions of terms that are either not used in the regulations or are defined in the statute;

3. Removes the nonregulatory examples from the definition of *''program income''* and from the new § 761.15—Applicants and activities; and

4. Removes statutory language from the new § 761.15—Applicants and activities.

As a result of the streamlining efforts in this rule, HUD will eliminate approximately 7 pages of unnecessary regulations from the CFR.

II. Justification for Final Rulemaking

HUD generally publishes a rule for public comment before issuing a rule for effect, in accordance with HUD's regulations on rulemaking found in 24 CFR part 10. However, part 10 provides for exceptions from the general rule if the agency finds good cause to omit advance notice and public participation. The good cause requirement is satisfied when prior public procedure is ''impracticable, unnecessary, or contrary to the public interest'' (24 CFR 10.1). HUD finds that good cause exists to publish this rule for effect without first soliciting public comment, in that prior public procedure is unnecessary. This final rule merely consolidates and streamlines two sets of similar regulations; it does not change HUD's policies or substantive requirements.

III. Other Matters

Regulatory Flexibility Act

The Secretary, in accordance with the Regulatory Flexibility Act (5 U.S.C. 605(b)), has reviewed and approved this final rule, and in so doing certifies that this rule will not have a significant economic impact on a substantial number of small entities. This rule merely streamlines regulations by removing unnecessary provisions. The rule will have no adverse or disproportionate economic impact on small businesses.

Environmental Impact

This rulemaking does not have an environmental impact. This rulemaking simply amends existing regulations by consolidating and streamlining provisions and does not alter the environmental effect of the regulations being amended. Separate Findings of No Significant Impact with respect to the environment were made in accordance with HUD regulations in 24 CFR part 50 that implement section 102(2)(C) of the National Environmental Policy Act of 1969 (42 U.S.C. 4332) at the time of initial development of the regulations for the Drug Elimination Programs. The findings remain applicable to this rule, and are available for public inspection between 7:30 a.m. and 5:30 p.m. weekdays in the Office of the Rules Docket Clerk, Office of General Counsel, Room 10276, Department of Housing and Urban Development, 451 Seventh Street, SW, Washington, DC.

Executive Order 12612, Federalism

The General Counsel, as the Designated Official under section 6(a) of Executive Order 12612, *Federalism,* has determined that this rule will not have substantial direct effects on States or their political subdivisions, or the relationship between the Federal Government and the States, or on the distribution of power and responsibilities among the various levels of government. No programmatic or policy changes will result from this rule that would affect the relationship between the Federal Government and State and local governments.

Executive Order 12606, The Family

The General Counsel, as the Designated Official under Executive Order 12606, *The Family,* has determined that this rule will not have the potential for significant impact on family formation, maintenance, or general well-being, and thus is not subject to review under the Order. No significant change in existing HUD policies or programs will result from promulgation of this rule.

List of Subjects

24 CFR Part 261

Drug abuse, Drug traffic control, Grant programs—housing and community development, Grant programs—low and moderate income housing, Reporting and recordkeeping requirements.

24 CFR Part 761

Drug abuse, Drug traffic control, Grant programs—housing and community development, Grant programs—Indians, Grant programs—low and moderate income housing, Indians, Public housing, Reporting and recordkeeping requirements.

24 CFR Part 961

Drug abuse, Drug traffic control, Grant programs—housing and community development, Grant programs—Indians, Grant programs—low and moderate income housing, Indians, Public housing, Reporting and recordkeeping requirements.

Accordingly, under the authority of 42 U.S.C. 3535(d), for the reasons stated in the preamble, in title 24 of the Code of Federal Regulations, parts 261 and 961 are removed, and part 761 is added as follows:

PART 261—[REMOVED]

1. Part 261 is removed.

2. In chapter VII, the heading is revised to read as follows:

CHAPTER VII—OFFICE OF THE SECRETARY, DEPARTMENT OF HOUSING AND URBAN DEVELOPMENT (HOUSING ASSISTANCE PROGRAMS AND PUBLIC AND INDIAN HOUSING PROGRAMS)

3. A new part 761 is added to read as follows:

PART 761—DRUG ELIMINATION PROGRAMS

Subpart A—General

Sec.
761.1 Purpose and scope.
761.5 Public and Indian housing; encouragement of resident participation.
761.10 Definitions.

Subpart B—Use of Grant Funds

761.15 Applicants and activities.

Subpart C—Application and Selection

761.20 Application selection and requirements.
761.25 Resident comments on grant application.

Subpart D—Grant Administration

761.30 Grant administration.
761.35 Periodic grantee reports.
761.40 Other Federal requirements.

Authority: 42 U.S.C. 3535(d) and 11901 *et seq.*

Subpart A—General

§ 761.1 Purpose and scope.

This part 761 contains the regulatory requirements for the Assisted Housing Drug Elimination Program and the Public Housing Drug Elimination Program. The purposes of these programs are to:

(a) Eliminate drug-related crime and problems associated with it in and around the premises of Federally assisted low-income housing, and public and Indian housing developments;

(b) Encourage owners of Federally assisted low-income housing, public housing agencies and Indian housing authorities (collectively referred to as HAs), and resident management corporations to develop a plan that includes initiatives that can be sustained over a period of several years for addressing drug-related crime and problems associated with it in and around the premises of housing proposed for funding under this part; and

(c) Make available Federal grants to help owners of Federally assisted low-income housing, HAs, and RMCs carry out their plans.

§ 761.5 Public and Indian housing; encouragement of resident participation.

For the purposes of the Public Housing Drug Elimination Program, the elimination of drug-related crime and problems associated with it within public housing developments requires the active involvement and commitment of public housing residents and their organizations. To enhance the ability of HAs to combat drug-related crime and problems associated with it within their developments, Resident Councils (RCs),

Resident Management Corporations (RMCs), and Resident Organizations (ROs) will be permitted to undertake management functions specified in this part, notwithstanding the otherwise applicable requirements of 24 CFR parts 950 and 964.

§ 761.10 Definitions.

The definitions ''*Department*'', ''HUD'', ''*Indian*'', ''*Indian Housing Authority (IHA)*'', and ''*Public Housing Agency (PHA)*'' are defined in 24 CFR part 5.

Controlled substance shall have the meaning provided in section 102 of the Controlled Substance Act (21 U.S.C. 802).

Drug intervention means a process to identify assisted housing or public housing resident drug users, to assist them in modifying their behavior, and/or to refer them to drug treatment to reduce or eliminate drug abuse.

Drug prevention means a process to provide goods and services designed to alter factors, including activities, environmental influences, risks, and expectations, that lead to drug abuse.

Drug-related crime shall have the meaning provided in 42 U.S.C. 11905(2).

Drug treatment means a program for the residents of an applicant's development that strives to end drug abuse and to eliminate its negative effects through rehabilitation and relapse prevention.

Federally assisted low-income housing, or *assisted housing*, shall have the meaning provided in 42 U.S.C. 11905(4). However, sections 221(d)(3) and 221(d)(4) market rate projects with tenant-based assistance contracts and section 8 projects with tenant-based assistance are not considered federally assisted low-income housing and are not eligible for funding under this part 761.

Governmental jurisdiction means the unit of general local government, State, or area of operation of an Indian tribe in which the housing development administered by the applicant is located.

In and around means within, or adjacent to, the physical boundaries of a housing development.

Indian tribe means any tribe, band, pueblo, group, community, or nation of Indians, or Alaska Natives.

Local law enforcement agency means a police department, sheriff's office, or other entity of the governmental jurisdiction that has law enforcement responsibilities for the community at large, including the housing developments owned or administered by the applicant. In Indian jurisdictions, this includes tribal prosecutors that assume law enforcement functions analogous to a police department or the Bureau of Indian Affairs (BIA). More than one law enforcement agency may have these responsibilities for the jurisdiction that includes the applicant's developments.

Problems associated with drug-related crime means the negative physical, social, educational, and economic impact of drug-related crime on assisted housing residents or public and Indian housing residents, and the deterioration of the assisted housing or public and Indian housing environment because of drug-related crime.

Program income means gross income received by a grantee and directly generated from the use of program funds. When program income is generated by an activity only partially assisted with program funds, the income shall be prorated to reflect the percentage of program funds used.

Resident council (RC), for purposes of the Public Housing Program, means an incorporated or unincorporated nonprofit organization or association that meets each of the following requirements:

(1) It must be representative of the residents it purports to represent;

(2) It may represent residents in more than one development or in all of the developments of a HA, but it must fairly represent residents from each development that it represents;

(3) It must adopt written procedures providing for the election of specific officers on a regular basis (but at least once every three years); and

(4) It must have a democratically elected governing board. The voting membership of the board must consist of residents of the development or developments that the resident organization or resident council represents.

Resident Management Corporation (RMC), for purposes of the Public Housing Program, means the entity that proposes to enter into, or that enters into, a management contract with a PHA under 24 CFR part 964 in accordance with the requirements of that part, or with an IHA under 24 CFR part 950, or with an IHA in accordance with the requirements of this part 761. The corporation must have each of the following characteristics:

(1) It must be a nonprofit organization that is incorporated under the laws of the State or the Indian tribe in which it is located;

(2) It may be established by more than one resident organization or resident council, so long as each such organization or council:

(i) Approves the establishment of the corporation, and;

(ii) Has representation on the Board of Directors of the corporation;

(3) It must have an elected Board of Directors;

(4) Its by-laws must require the Board of Directors to include representatives of each resident organization or resident council involved in establishing the corporation;

(5) Its voting members must be residents of the development or developments it manages;

(6) It must be approved by the resident council or resident organization. If there is no council or organization, a majority of the households of the development must approve the establishment of such an organization to determine the feasibility of establishing a corporation to manage the development; and

(7) It may serve as both the resident management corporation and the resident council or the resident organization, so long as the corporation meets the requirements of part 964 of this chapter for a resident council or the requirements of this part for a resident organization.

Resident organization (RO) shall have the same meaning as *Resident council (RC)*, as defined in this § 761.10.

State means any of the several States of the United States, the District of Columbia, the Commonwealth of Puerto Rico, any territory or possession of the United States, or any agency or instrumentality of a State exclusive of local governments. The term does not include any public or Indian housing agency under the United States Housing Act of 1937 (42 U.S.C. 1437 *note*).

Unit of general local government means any city, county, town, municipality, township, parish, village, local public authority (including any public or Indian housing agency under the United States Housing Act of 1937) or other general purpose political subdivision of a State.

Subpart B—Use of Grant Funds

§ 761.15 Applicants and activities.

In any particular funding round, the separate Notices of Funding Availability (NOFAs) published in the Federal Register will contain specific information concerning eligible and ineligible applicants and activities.

(a) *Eligible applicants.* (1) Under the Public Housing Drug Elimination Program (PHDEP), specific information with regard to eligible applicants will appear in the NOFA for each funding round.

(2) Under the Assisted Housing Program (AHDEP), eligible applicants

are owners of federally assisted low-income housing, as the term ''*Federally assisted low-income housing*'' is defined in § 761.10.

(b) *Eligible activities.* An application for funding under the Assisted Housing Program or the Public Housing Program may be for one or more of the eligible activities described in 42 U.S.C. 11903, as further explained or limited in paragraph (b) of this section and in the separate annual Notices of Funding Availability (NOFAs) for each program. All personnel funded by these programs in accordance with an eligible activity must meet, and demonstrate compliance with, all relevant Federal, State, tribal, or local government insurance, licensing, certification, training, bonding, or other similar law enforcement requirements.

(1) *Employment of security personnel,* as provided in 42 U.S.C. 11903(a)(1). For purposes of the Public Housing Program, the following provisions in paragraphs (b)(1)(i) and (b)(1)(ii) of this section apply:

(i) *Security guard personnel.* (A) Contract security personnel funded by this program must perform services not usually performed by local law enforcement agencies on a routine basis.

(B) The applicant, the cooperating local law enforcement agency, and the provider (contractor) of the security personnel are required, as a part of the security personnel contract, to enter into and execute a written agreement that describes the following:

(*1*) The activities to be performed by the security personnel, their scope of authority, and how they will coordinate their activities with the local law enforcement agency;

(*2*) The types of activities that the security personnel are expressly prohibited from undertaking.

(ii) *Employment of HA police.* (A) If additional HA police are to be employed for a service that is also provided by a local law enforcement agency, the applicant must provide a cost analysis that demonstrates the employment of HA police is more cost efficient than obtaining the service from the local law enforcement agency.

(B) Additional HA police services to be funded under this program must be over and above those that the existing HA police, if any, provides, and the tribal, State or local government is contractually obligated to provide under its Cooperation Agreement with the applying HA (as required by the HA's Annual Contributions Contract). An applicant seeking funding for this activity must first establish a baseline by describing the current level of services provided by both the local law enforcement agency and the HA police, if any (in terms of the kinds of services provided, the number of officers and equipment and the actual percent of their time assigned to the developments proposed for funding), and then demonstrate to what extent the funded activity will represent an increase over this baseline.

(C) The applicant and the cooperating local law enforcement agency are required to enter into and execute a written agreement that describes the following:

(*1*) The activities to be performed by the HA police, their scope of authority, and how they will coordinate their activities with the local law enforcement agency;

(*2*) The types of activities that the HA police are expressly prohibited from undertaking.

(2) *Reimbursement of local law enforcement agencies for additional security and protective services,* as provided in 42 U.S.C. 11903(a)(2). For purposes of the Public Housing Program, the following provisions in paragraphs (b)(2)(i) and (b)(2)(ii) of this section apply:

(i) Additional security and protective services to be funded must be over and above those that the tribal, State, or local government is contractually obligated to provide under its Cooperation Agreement with the applying HA (as required by the HA's Annual Contributions Contract). An application seeking funding for this activity must first establish a baseline by describing the current level of services (in terms of the kinds of services provided, the number of officers and equipment, and the actual percent of their time assigned to the developments proposed for funding) and then demonstrate to what extent the funded activity will represent an increase over this baseline.

(ii) Communications and security equipment to improve the collection, analysis, and use of information about drug-related criminal activities in a public housing community may be eligible items if used exclusively in connection with the establishment of a law enforcement substation on the funded premises or scattered site developments of the applicant. Funds for activities under this section may not be drawn until the grantee has executed a contract for the additional law enforcement services.

(3) *Physical improvements to enhance security,* as provided in 42 U.S.C. 11903(a)(3). For purposes of the Public Housing Program, the following provisions in paragraphs (b)(3)(i) through (b)(3)(iv) of this section apply:

(i) An activity that is funded under any other HUD program shall not also be funded by this program.

(ii) Funding is not permitted for physical improvements that involve the demolition of any units in a development.

(iii) Funding is not permitted for any physical improvements that would result in the displacement of persons.

(iv) Funding is not permitted for the acquisition of real property.

(4) *Employment of investigating individuals,* as provided in 42 U.S.C. 11903(a)(4). For purposes of the Public Housing Program, the following provisions in paragraphs (b)(4)(i) and (b)(4)(ii) of this section apply:

(i) If one or more investigators are to be employed for a service that is also provided by a local law enforcement agency, the applicant must provide a cost analysis that demonstrates the employment of investigators is more cost efficient than obtaining the service from the local law enforcement agency.

(ii) The applicant, the cooperating local law enforcement agency, and the investigator(s) are required, before any investigators are employed, to enter into and execute a written agreement that describes the following:

(A) The nature of the activities to be performed by the investigators, their scope of authority, and how they will coordinate their activities with the local law enforcement agency;

(B) The types of activities that the investigators are expressly prohibited from undertaking.

(5) *Voluntary tenant patrols,* as provided in 42 U.S.C. 11903(a)(5). For purposes of the Public Housing Program, the following provisions in paragraphs (b)(5)(i) through (b)(5)(iv) of this section apply:

(i) The provision of training, communications equipment, and other related equipment (including uniforms), for use by voluntary tenant patrols acting in cooperation with officials of local law enforcement agencies is permitted. Grantees are required to obtain liability insurance to protect themselves and the members of the voluntary tenant patrol against potential liability for the activities of the patrol. The cost of this insurance will be considered an eligible program expense.

(ii) The applicant, the cooperating local law enforcement agency, and the members of the tenant patrol are required, before putting the tenant patrol into effect, to enter into and execute a written agreement that describes the following:

(A) The nature of the activities to be performed by the tenant patrol, the patrol's scope of authority, and how the

patrol will coordinate its activities with the local law enforcement agency;

(B) The types of activities that a tenant patrol is expressly prohibited from undertaking, to include but not limited to, the carrying or use of firearms or other weapons, nightsticks, clubs, handcuffs, or mace in the course of their duties under this program;

(C) The type of initial tenant patrol training and continuing training the members receive from the local law enforcement agency (training by the local law enforcement agency is required before putting the tenant patrol into effect).

(iii) Tenant patrol members must be advised that they may be subject to individual or collective liability for any actions undertaken outside the scope of their authority and that such acts are not covered under a HA's or RMC's liability insurance.

(iv) Grant funds may not be used for any type of financial compensation for voluntary tenant patrol participants. However, the use of program funds for a grant coordinator for volunteer tenant foot patrols is permitted.

(6) *Drug prevention, intervention, and treatment programs,* as provided in 42 U.S.C. 11903(a)(6).

(7) *Funding resident management corporations (RMCs), resident councils (RCs), and resident organizations (ROs).* For purposes of the Public Housing Program, funding may be provided for HAs that receive grants to contract with RMCs and incorporated RCs and ROs to develop security and drug abuse prevention programs involving site residents, as provided in 42 U.S.C. 11903(a)(7).

(8) *Eliminating drug-related crime in HA-owned housing,* under the Public Housing Program, as provided in 42 U.S.C. 11903(b).

(c) *Continuation of current program activities.* For purposes of both drug elimination programs, the Department will evaluate an applicant's performance under any previous Drug Elimination Program grants within the past five years. Subject to evaluation and review are the applicant's financial and program performance; reporting and special condition compliance; accomplishment of stated goals and objectives under the previous grant; and program adjustments made in response to previous ineffective performance. If the evaluation discloses a pattern under past grants of ineffective performance with no corrective measures attempted, it will result in a deduction of points from the current application.

(d) *Ineligible activities.* For purposes of the Public Housing Program, the following provisions in paragraph (d) of this section apply:

(1) Joint applications are not eligible for funding under this program.

(2) Funding is not permitted for costs incurred before the effective date of the grant agreement, including, but not limited to, consultant fees for surveys related to the application or the actual writing of the application.

(3) Funding is not permitted for the costs related to screening or evicting residents for drug-related crime. However, investigators funded under this program may participate in judicial and administrative proceedings.

Subpart C—Application and Selection

§ 761.20 Application selection and requirements.

(a) *Selection criteria.* HUD will review each application that it determines meets the requirements of this part 761 and evaluate it by assigning points in accordance with the selection criteria in 42 U.S.C. 11904 and in the separate NOFAs published for each program.

(b) *Plan requirement.* Each application must include a plan for addressing the problem of drug-related crime and/or the problems associated with it on the premises of the housing for which the application is being submitted. For applications that cover more than one development, the plan does not have to address each development separately if the same activities will apply to each development. The plan must address each development separately only where program activities will differ from one development to another.

(c) *Notices of Funding Availability.* HUD will publish specific Notices of Funding Availability (NOFAs) in the Federal Register as appropriate for each program to inform the public of the availability of grant amounts under this part 761. The NOFAs will provide specific guidance with respect to the grant process, including the deadlines for the submission of grant applications; the limits (if any) on maximum grant amounts; the information that must be submitted to permit HUD to score each of the selection criteria; the maximum number of points to be awarded for each selection criterion; the contents of the plan for addressing drug-related crime and problems associated with it that must be included with the application; the listing of any certifications and assurances that must be submitted with the application; and the process for ranking and selecting applicants. NOFAs will also include any additional information, factors, and requirements that HUD has determined to be necessary and appropriate to provide for the implementation and administration of the program under this part 761.

(d) *Environmental review.* Grants under this part 761 are categorically excluded from review under the National Environmental Policy Act of 1969 (NEPA) (42 U.S.C. 4321), in accordance with 24 CFR 50.20(p). However, prior to an award of grant funds under this part, HUD will perform an environmental review to the extent required by HUD's environmental regulations in 24 CFR part 50, including the applicable related authorities in 24 CFR 50.4.

§ 761.25 Resident comments on grant application.

The applicant must provide the residents of developments proposed for funding under this part 761, as well as any RMCs, RCs, or ROs that represent those residents (including any HA-wide RMC, RC, or RO), if applicable, with a reasonable opportunity to comment on its application for funding under these programs. The applicant must give these comments careful consideration in developing its plan and application, as well as in the implementation of funded programs. Grantees must maintain copies of all written comments submitted for three years.

Subpart D—Grant Administration

§ 761.30 Grant administration.

(a) *General.* Each grantee is responsible for ensuring that grant funds are administered in accordance with the requirements of this part 761, any specific Notices of Funding Availability (NOFAs) issued for these programs, 24 CFR part 85 (as applicable), applicable laws and regulations, applicable OMB circulars, HUD fiscal and audit controls, grant agreements, grant special conditions, the grantee's approved budget (SF–424A), budget narrative, plan, and activity timetable.

(b) *Grant term extensions.* (1) *Grant term.* Terms of the grant agreement may not exceed 12 months for the Assisted Housing Program, and 24 months for the Public Housing Program, unless an extension is approved by the local HUD Office or local HUD Office of Native American Programs. Any funds not expended at the end of the grant term shall be remitted to HUD.

(2) *Extension.* HUD may grant an extension of the grant term in response to a written request for an extension stating the need for the extension and indicating the additional time required. HUD will not consider requests for retroactive extension of program periods. HUD will permit only one

extension. HUD will only consider extensions if the grantee meets the extension criteria of paragraph (b)(5) of this section at the time the grantee submits for approval the request for the extension.

(3) *Receipt.* The request must be received by the local HUD Office or local HUD Office of Native American Programs prior to the termination of the grant, and requires approval by the local HUD Office or local HUD Office of Native American Programs with jurisdiction over the grantee.

(4) *Term.* The maximum extension allowable for any program period is 6 months.

(5) *Extension criteria.* The following criteria must be met by the grantee when submitting a request to extend the expenditure deadline for a program or set of programs.

(i) *Financial status reports.* There must be on file with the local HUD Office or local HUD Office of Native American Programs current and acceptable Financial Status Reports, SF–269As.

(ii) *Grant agreement special conditions.* The grantee must have satisfied all grant agreement special conditions except those conditions that the grantee must fulfill in the remaining period of the grant. This also includes the performance and resolution of audit findings in a timely manner.

(iii) *Justification.* The grantee must submit a narrative justification with the program extension request. The justification must provide complete details, including the circumstances that require the proposed extension, and an explanation of the impact of denying the request.

(6) *HUD action.* The local HUD Office or local HUD Office of Native American Programs will attempt to take action on any proposed extension request within 15 days after receipt of the request.

(c) *Duplication of funds.* To prevent duplicate funding of any activity, the grantee must establish controls to assure that an activity or program that is funded by other HUD programs, or programs of other Federal agencies, shall not also be funded by the Drug Elimination Program. The grantee must establish an auditable system to provide adequate accountability for funds that it has been awarded. The grantee is responsible for ensuring that there is no duplication of funds.

(d) *Insurance.* Each grantee shall obtain adequate insurance coverage to protect itself against any potential liability arising out of the eligible activities under this part. In particular, applicants shall assess their potential liability arising out of the employment or contracting of security personnel, law enforcement personnel, investigators, and drug treatment providers, and the establishment of voluntary tenant patrols; evaluate the qualifications and training of the individuals or firms undertaking these functions; and consider any limitations on liability under tribal, State, or local law. Grantees shall obtain liability insurance to protect the members of the voluntary tenant patrol against potential liability as a result of the patrol's activities under § 761.15(b)(5). Voluntary tenant patrol liability insurance costs are eligible program expenses. Subgrantees shall obtain their own liability insurance.

(e) *Failure to implement program.* If the grant plan, approved budget, and timetable, as described in the approved application, are not operational within 60 days of the grant agreement date, the grantee must report by letter to the local HUD Office or the local HUD Office of Native American Programs the steps being taken to initiate the plan and timetable, the reason for the delay, and the expected starting date. Any timetable revisions that resulted from the delay must be included. The local HUD Office or local HUD Office of Native American Programs will determine if the delay is acceptable, approve/disapprove the revised plan and timetable, and take any additional appropriate action.

(f) *Sanctions.* (1) HUD may impose sanctions if the grantee:

(i) Is not complying with the requirements of this part 761, or of other applicable Federal law;

(ii) Fails to make satisfactory progress toward its drug elimination goals, as specified in its plan and as reflected in its performance and financial status reports;

(iii) Does not establish procedures that will minimize the time elapsing between drawdowns and disbursements;

(iv) Does not adhere to grant agreement requirements or special conditions;

(v) Proposes substantial plan changes to the extent that, if originally submitted, the applications would not have been selected for funding;

(vi) Engages in the improper award or administration of grant subcontracts;

(vii) Does not submit reports; or

(viii) Files a false certification.

(2) HUD may impose the following sanctions:

(i) Temporarily withhold cash payments pending correction of the deficiency by the grantee or subgrantee;

(ii) Disallow all or part of the cost of the activity or action not in compliance;

(iii) Wholly or partly suspend or terminate the current award for the grantee's or subgrantee's program;

(iv) Require that some or all of the grant amounts be remitted to HUD;

(v) Condition a future grant and elect not to provide future grant funds to the grantee until appropriate actions are taken to ensure compliance;

(vi) Withhold further awards for the program; or

(vii) Take other remedies that may be legally available.

§ 761.35 Periodic grantee reports.

Grantees are responsible for managing the day-to-day operations of grant and subgrant supported activities. Grantees must monitor grant and subgrant supported activities to assure compliance with applicable Federal requirements and that performance goals are being achieved. Grantee monitoring must cover each program, function or activity of the grant.

(a) *Semi-annual (nonconstruction) performance reports.* For purposes of the Public Housing Program only, the following provisions in paragraph (a) of this section apply:

(1) In accordance with 24 CFR 85.40(b)(1)(2) and 85.50(b), grantees are required to provide the local HUD Office or the local HUD Office of Native American Programs with a semi-annual performance report that evaluates the grantee's performance against its plan. These reports shall include (but are not limited to) the following in summary form:

(i) Any change or lack of change in crime statistics or other indicators drawn from the applicant's plan assessment and an explanation of any difference;

(ii) Successful completion of any of the strategy components identified in the applicant's plan;

(iii) A discussion of any problems encountered in implementing the plan and how they were addressed;

(iv) An evaluation of whether the rate of progress meets expectations;

(v) A discussion of the grantee's efforts in encouraging resident participation; and

(vi) A description of any other programs that may have been initiated, expanded, or deleted as a result of the plan, with an identification of the resources and the number of people involved in the programs and their relation to the plan.

(2) *Reporting period.* Semi-annual performance reports (for periods ending June 30 and December 31) are due to the local HUD Office or the local HUD Office of Native American Programs on July 30 and January 31 of each year. If

the reports are not received by the local HUD Office or the local HUD Office of Native American Programs on or before the due date, grant funds will not be advanced until the reports are received.

(b) *Final performance report.* For purposes of both the Assisted Housing Program and the Public Housing Program, the following provisions in paragraph (b) of this section apply:

(1) *Evaluation.* Grantees are required to provide the local HUD Office or the local HUD Office of Native American Programs, as applicable, with a final cumulative performance report that evaluates the grantee's overall performance against its plan. This report shall include (but is not limited to) the information listed in paragraphs (a)(1)(i) through (a)(1)(vi) of this section, in summary form.

(2) *Reporting period.* The final performance report shall cover the period from the date of the grant agreement to the termination date of the grant agreement. The report is due to the local HUD Office or the local HUD Office of Native American Programs, as applicable, within 90 days after termination of the grant agreement.

(c) *Semi-annual financial status reporting requirements.* For purposes of both the Assisted Housing Program and the Public Housing Program, the following provisions in paragraph (c) of this section apply, as specified below:

(1) *Forms.* The grantee shall provide a semi-annual financial status report. For purposes of the Public Housing Program, this report shall be in accordance with 24 CFR 85.41 (b) and (c). For both the Assisted Housing and Public Housing Programs, the grantee shall use the form SF–269A, Financial Status Report-Long Form, to report the status of funds for nonconstruction programs. The grantee shall use SF–269A, block 12, ''Remarks,'' to report on the status of programs, functions, or activities within the program.

(2) *Reporting period.* Semi-annual financial status reports (SF–269A) must be submitted as follows:

(i) For purposes of the Assisted Housing Program, semi-annual financial status reports covering the first 180 days of funded activities must be submitted to the local HUD Office between 190 and 210 days after the date of the grant agreement. If the SF–269A is not received on or before the due date (210 days after the date of the grant agreement) by the local HUD Office, grant funds will not be advanced until the reports are received.

(ii) For purposes of the Public Housing Program, semi-annual financial status reports (for periods ending June 30 and December 31) must be submitted to the local HUD Office or the local Office of Indian Programs, as applicable, by July 30 and January 31 of each year. If the local HUD Office or the local HUD Office of Native American Programs, as applicable, does not receive the SF–269A on or before the due date, the grant funds will not be advanced until the reports are received.

(d) *Final financial status report (SF–269A).* For purposes of both the Assisted Housing Program and the Public Housing Program, the following provisions in paragraph (d) of this section apply:

(1) *Cumulative summary.* The final report will be a cumulative summary of expenditures to date and must indicate the exact balance of unexpended funds. The grantee shall remit all Drug Elimination Program funds owed to HUD, including any unexpended funds, as follows:

(i) For purposes of the Assisted Housing Program, the grantee must remit such funds to HUD within 90 days after the termination of the grant agreement.

(ii) For purposes of the Public Housing Program, the local HUD Office or the local HUD Office of Native American Programs shall notify the grantee, in writing, of the requirement to remit such funds to HUD. The grantee shall remit such funds prior to or upon receipt of the notice.

(2) *Reporting period.* The final financial status report shall cover the period from the date of the grant agreement to the termination date of the grant agreement. The report is due to the local HUD Office or the local HUD Office of Native American Programs, as applicable, within 90 days after the termination of the grant agreement.

§ 761.40 Other Federal requirements.

In addition to the nondiscrimination and equal opportunity requirements set forth in 24 CFR part 5, subpart A, use of grant funds requires compliance with the following Federal requirements:

(a) *Labor standards.* (1) When grant funds are used to undertake physical improvements to increase security under § 761.15(b)(3), the following labor standards apply:

(i) The grantee and its contractors and subcontractors must pay the following prevailing wage rates, and must comply with all related rules, regulations and requirements:

(A) For laborers and mechanics employed in the program, the wage rate determined by the Secretary of Labor pursuant to the Davis-Bacon Act (40 U.S.C. 276a et seq.) to be prevailing in the locality with respect to such trades;

(B) For laborers and mechanics employed in carrying out nonroutine maintenance in the program, the HUD-determined prevailing wage rate. As used in paragraph (a) of this section, nonroutine maintenance means work items that ordinarily would be performed on a regular basis in the course of upkeep of a property, but have become substantial in scope because they have been put off, and that involve expenditures that would otherwise materially distort the level trend of maintenance expenses. Nonroutine maintenance may include replacement of equipment and materials rendered unsatisfactory because of normal wear and tear by items of substantially the same kind. Work that constitutes reconstruction, a substantial improvement in the quality or kind of original equipment and materials, or remodeling that alters the nature or type of housing units is not nonroutine maintenance.

(ii) The employment of laborers and mechanics is subject to the provisions of the Contract Work Hours and Safety Standards Act (40 U.S.C. 327–333).

(2) The provisions of paragraph (a)(1) of this section shall not apply to labor contributed under the following circumstances:

(i) Upon the request of any resident management corporation, HUD may, subject to applicable collective bargaining agreements, permit residents (for purposes of the Public Housing Program, residents of a program managed by the resident management corporation) to volunteer a portion of their labor.

(ii) An individual may volunteer to perform services if:

(A) The individual does not receive compensation for the voluntary services, or is paid expenses, reasonable benefits, or a nominal fee for voluntary services; and

(B) Is not otherwise employed at any time in the work subject to paragraphs (a)(1)(i)(A) or (a)(1)(i)(B) of this section.

(b) *Flood insurance.* Grants will not be awarded for proposed activities that involve acquisition, construction, reconstruction, repair or improvement of a building or mobile home located in an area that has been identified by the Federal Emergency Management Agency (FEMA) as having special flood hazards unless:

(1) The community in which the area is situated is participating in the National Flood Insurance Program in accordance with 44 CFR parts 59 through 79; or

(2) Less than a year has passed since FEMA notification to the community regarding such hazards; and

(3) Flood insurance on the structure is obtained in accordance with section 102(a) of the Flood Disaster Protection Act of 1973 (42 U.S.C. 4001).

(c) *Lead-based paint.* The provisions of section 302 of the Lead-Based Paint Poisoning Prevention Act, 42 U.S.C. 4821–4846, and implementing regulations in 24 CFR part 965, subpart H apply to activities under these programs as set out in this paragraph (c). Paragraph (c) of this section is promulgated pursuant to the authority granted in 24 CFR 35.24(b)(4) and supersedes, with respect to all housing to which it applies, the requirements (not including definitions) prescribed by subpart C of 24 CFR part 35.

(1) *Applicability.* The provisions of paragraph (c) of this section shall apply to all developments constructed or substantially rehabilitated before January 1, 1978, and for which assistance under this part is being used for physical improvements to enhance security under § 761.15(b)(3).

(2) *Definitions.* The term ''*applicable surfaces*'' means all intact and nonintact interior and exterior painted surfaces of a residential structure.

(3) *Exceptions.* The following activities are not covered by this section:

(i) Installation of security devices;

(ii) Other similar types of single-purpose programs that do not involve physical repairs or remodeling of applicable surfaces of residential structures; or

(iii) Any non-single-purpose rehabilitation that does not involve applicable surfaces and that does not exceed $3,000 per unit.

(d) *Conflicts of interest.* In addition to the conflict of interest requirements in 24 CFR part 85 for the Public Housing Program, no person, as described in paragraphs (d)(1) and (d)(2) of this section, may obtain a personal or financial interest or benefit from an activity funded under these drug elimination programs, or have an interest in any contract, subcontract, or agreement with respect thereto, or the proceeds thereunder, either for him or herself or for those with whom he or she has family or business ties, during his or her tenure, or for one year thereafter:

(1) Who is an employee, agent, consultant, officer, or elected or appointed official of the grantee, that receives assistance under the program and who exercises or has exercised any functions or responsibilities with respect to assisted activities; or

(2) Who is in a position to participate in a decisionmaking process or gain inside information with regard to such activities.

(e) *For IHAs,* § 950.115 of this title, ''Applicability of civil rights requirements,'' and § 950.120 of this title, ''Compliance with other Federal requirements,'' apply and control to the extent they may differ from other requirements of this section;

(f) *Indian preference.* For purposes of the Public Housing Program, applicants are subject to the Indian Civil Rights Act (24 U.S.C. 1301), the provisions of section 7(b) of the Indian Self-Determination and Education Assistance Act (25 U.S.C. 450e(b)), and the Indian preference rules in the IHA procurement regulations at 24 CFR 950, subpart B. These provisions require that, to the greatest extent feasible, preference and opportunities for training and employment be given to Indians, and that preference in the award of subcontracts and subgrants be given to Indian Organizations and Indian Owned Economic Enterprises.

(g) *Intergovernmental Review.* The requirements of Executive Order 12372 (3 CFR, 1982 Comp., p. 197) and the regulations issued under the Order in 24 CFR part 52, to the extent provided by Federal Register notice in accordance with 24 CFR 52.3, apply to these programs.

PART 961—[REMOVED]

4. Part 961 is removed.

Dated: March 15, 1996.

Henry G. Cisneros,

Secretary.

[FR Doc. 96–7272 Filed 3–27–96; 8:45 am]

BILLING CODE 4210–32–P

federal register

Thursday
March 28, 1996

Part VI

Department of Education

34 CFR Part 656

Higher Education Programs in Modern Foreign Language Training and Area Studies—National Resource Centers Program for Foreign Language and International Studies; Proposed Rule

DEPARTMENT OF EDUCATION

34 CFR Part 656

RIN 1840–AC27

Higher Education Programs in Modern Foreign Language Training and Area Studies—National Resource Centers Program for Foreign Language and Area Studies or Foreign Language and International Studies

AGENCY: Department of Education.

ACTION: Notice of Proposed Rulemaking.

SUMMARY: The Secretary proposes to amend the regulations governing the Higher Education Programs in Modern Foreign Language Training and Area Studies—National Resource Centers Program for Foreign Language and Area Studies or Foreign Language and International Studies (National Resource Centers Program). These amendments are needed in order to improve the application review process and to update the regulations in light of developments in the field of foreign language, area, and international studies. In the spirit of reinventing government, the goal of the proposed changes is to markedly reduce the burden associated with the application process. These proposed regulations would (a) reduce the burden on applicants and readers by clarifying and redesigning selection criteria to remove ambiguity and eliminate repetition of information presented in applications, (b) facilitate grantee selection by providing a larger point spread for greater differentiation of rankings, and (c) improve program quality, efficiency, and flexibility by adopting changes program management experience shows to be appropriate.

DATES: Comments must be received on or before April 29, 1996.

ADDRESSES: All comments concerning these proposed regulations should be addressed to Sara West, U.S. Department of Education, 600 Independence Avenue, S.W., Suite 600B, Portals Building, Washington, D.C. 20202–5331. Comments may also be sent through the Internet to ''National__Resource@ed.gov''.

Comments that concern information collection requirements must be sent to the Office of Management and Budget at the address listed in the Paperwork Reduction Act section of this preamble. A copy of those comments may also be sent to the Department representative named in the preceding paragraph.

FOR FURTHER INFORMATION CONTACT: Sara West. Telephone: (202) 401–9782. Individuals who use a telecommunications device for the deaf (TDD) may call the Federal Information Relay Service (FIRS) at 1–800–877–8339 between 8 a.m. and 8 p.m., Eastern time, Monday through Friday.

SUPPLEMENTARY INFORMATION:

Background

The National Resource Centers Program is one of several international education programs authorized under Part A of Title VI of the Higher Education Act of 1965, as amended. The main provisions of the regulations govern the awarding of grants designed to assist eligible institutions of higher education in improving and developing their programs in modern foreign languages and area or international studies.

In the spirit of reinventing government, it is the Secretary's goal to simplify the application process and management of the National Resource Centers Program. The Secretary proposes changes to add clarity to the review process, to decrease the current burden on applicants and peer reviewers, to facilitate the application of uniform standards among peer reviewers, and to increase flexibility in program management for funded grantees and for the Secretary.

The Secretary proposes to amend the regulations for the National Resource Centers Program by modifying the selection criteria for applications and by adding activities to the list of definitions and to the list of priorities.

Selection Criteria. The selection criteria currently used are very general, leading to some misinterpretation of questions asked, frequent repetition of information, and the inclusion of information that is not pertinent to the purpose of the National Resource Centers Program. The proposed changes seek to retain much of the sense of the current criteria while removing ambiguity regarding requested information. The purpose of the changes is to clarify what information should be presented so that (a) all applicants will provide more focused information necessary for evaluation of a proposal under this program, (b) applicants will be able to present all relevant information within fewer pages of proposal narrative, and (c) peer reviewers will be able to more easily and accurately evaluate and rank proposals based on comparative strengths.

A reorganized, broader point scale and clearly identified point allocations for individual paragraphs of the selection criteria are proposed in order to (a) enable peer reviewers to score more carefully and accurately differentiate between proposals of high caliber, (b) discourage peer reviewers from overlooking any individual question to be scored, and (c) clarify for peer reviewers and applicants exactly what requested information corresponds to each point value.

Expanded Definitions. The Secretary proposes to amend the regulations in keeping with current standards in the field of area, language, and international studies by (a) expanding the definition of a comprehensive center to include curriculum development and community outreach and (b) expanding the activities that define a comprehensive center to include ''training'' as well as research. These activities have long been standard at successful comprehensive National Resource Centers.

Expanded Possible Priorities. The Secretary proposes to increase flexibility in program management by expanding the list of possible funding priorities to include course development. Course development has long been a standard activity at National Resource Centers because it is a primary means by which training programs are strengthened. Including it in the list of possible priorities is, therefore, in keeping with the purpose of the National Resource Centers Program.

Explanation of Changes

The proposed changes include the following:

Section 656.3. What activities define a comprehensive or undergraduate National Resource Center?

Section 656.3(e)(2). The Secretary proposes to expand the list of activities defining a comprehensive center to include training. The current list does not accurately reflect the fact that National Resource Centers train specialists in area, language, and international studies.

Section 656.7. What definitions apply?

Section 656.7(d)(5). The Secretary proposes to expand the list of activities under the comprehensive center definition to reflect two activities commonly engaged in by successful grantees: curriculum development and community outreach. Curriculum development is very important for strengthening language and area centers and programs, while community outreach is necessary in order for centers to function as national resources. These activities are, therefore, integral to the purpose of the National Resource Centers Program. Including curriculum development and

community outreach in the list of activities would further clarify to the public the purpose of the grants and activities commonly engaged in by grantees.

Section 656.20. How does the Secretary evaluate an application?

Section 656.20(b). The Secretary proposes to expand the range of possible points for applications in order to enable peer reviewers to more carefully and accurately differentiate among proposals of high caliber in scoring. It has been the Secretary's experience that competition for grants under the National Resource Centers Program is strong. Recent winning applicants have scored in the 80's and low 90's on the current 100-point scale. As a result, there has been narrow point differentiation between successful applicants and high-ranking unsuccessful applicants. The Secretary believes that expanding the possible point range would facilitate funding decisions by providing peer reviewers with a larger scale on which to rank applications, allowing for greater differentiation of scores for applications of similar but different merit. The changed point scale, reflecting changes in the technical review criteria and their point allocations, would add 50 possible points for competitions for which there are no announced competitive priorities and 60 possible points for competitions for which competitive priorities have been announced.

Section 656.21. What selection criteria does the Secretary use to evaluate an application for a comprehensive center?

The Secretary proposes extensive changes in the sections dealing with selection criteria for comprehensive and undergraduate centers in order to improve the program's application review process and to reflect current standards in the field of foreign language, area and international studies. Modifications to the criteria are meant to more clearly identify the information that is relevant to the competition and to allow applicants to streamline their applications, thereby facilitating proposal writing for applicants and evaluation for peer reviewers. The proposed criteria incorporate most aspects of the current criteria, and applicants would, therefore, be expected to provide much of the same information as in the past. By more specifically identifying information to be provided in an application, the proposed criteria would allow applicants to exclude less helpful, generalized, and sometimes repetitious information and provide a concise justification for proposed activities in light of the purpose of the National Resource Centers Program.

Section 656.21(a). The Secretary proposes to replace the Plan of operation criterion with a criterion called Program planning and budget. The Program planning and budget criterion incorporates related elements of the current Plan of operation, Budget and cost effectiveness, and the Need and potential impact criteria. It has been the Secretary's experience that the language of these current criteria requires modification in order to avoid confusion among applicants and peer reviewers regarding the meaning of the questions asked. For example, one question under the Plan of operation criterion asks to what extent the objectives of the project relate to the purpose of the program. Applicants and evaluators are frequently uncertain whether ''program'' refers to the National Resource Centers grant program or to the applicant's training program. Additionally, the separation of these related elements under the present criteria frequently causes applicants to repeat the same information under several criteria. The Secretary proposes to clarify information to be presented and eliminate repetition by asking very explicit questions regarding the administration, cost-effectiveness, quality, and long-term impact of proposed activities in one criterion.

Section 656.21(b). The Secretary proposes to replace the Quality of key personnel criterion with a criterion called Quality of staff resources. The staff resources criterion would ask for the same kind of information as the current key personnel criterion but would also require more explicit information to be presented regarding faculty and staff involvement in center activities and oversight and professional development opportunities.

Section 656.21(c). The Secretary proposes to eliminate the current Budget and cost effectiveness criterion due to relocating questions on this subject matter under the proposed Program planning and budget criterion. The Secretary proposes a new Impact and evaluation criterion that would combine related aspects of the current Need and potential impact, Evaluation plan, and Plan of operation criteria. The combination of these questions in one criterion is logical due to the interrelatedness of questions about past performance and evaluating future performance.

Section 656.21(d). The Secretary proposes to eliminate the current Evaluation plan criterion due to the inclusion of similar questions under the proposed Impact and evaluation criterion. The Secretary proposes to redesignate the criterion Commitment to the subject area on which the center focuses, with a minor modification of language in order to identify the information to be presented.

Section 656.21(e). The Secretary proposes to modify and redesignate the Strength of library criterion. Due to the changes in information technologies and the rising costs of maintaining traditional collections, a library's book and periodical holdings are no longer the only factor that should be considered in evaluating the strength of a National Resource Center's library. The proposed regulations would clarify information to be presented and take into account that library resources can be provided in print and non-print media, through cooperative collection and access arrangements with other library collections, and through on-line, electronic data bases.

Section *656.21(f).* The Secretary proposes to insert a new criterion called Quality of the center's non-language instructional program. The proposed criterion would incorporate related elements of the current Quality of the center's instructional program and Quality of the center's relationships within the institution criteria. The Secretary believes that including all questions related to non-language course offerings in one section would allow grantees to streamline their proposals and avoid repetition. It has been the Secretary's experience that combining questions about non-language and language courses in the same criterion can lead to applicants' neglecting to provide full information about both non-language and language training. Further, the comprehensive nature of a resource center is reflected by the extent to which it incorporates non-language training in addition to training in language, literature, and linguistics. For these reasons, the Secretary proposes to ask parallel questions regarding the quality of language and non-language training under two separate criteria. It is the opinion of the Secretary that separate criteria would emphasize the importance to the National Resource Centers Program of both language and area or international studies training.

Section 656.21(g). The Secretary proposes to address under this criterion the Quality of the center's language instructional program. Questions asked under this criterion are similar to questions currently asked under Quality of the center's instructional program criterion but more specifically identify information to be provided.

Section 656.21(h). The Secretary proposes to eliminate the current Quality of the center's relationships within the institution criterion due to the inclusion of similar questions under the proposed Quality of the center's non-language instructional program criterion. The Secretary proposes a new Quality of curriculum design criterion that would combine elements of the current Quality of the center's relationships within the institution and Overseas activities criteria. The new criterion would allow applicants to focus on the issue of training options for students within the context of a single criterion.

Section 656.21(i). The Secretary proposes to eliminate the current Overseas activities criterion due to the inclusion of related questions under the proposed Quality of curriculum design, Commitment to the subject area on which the center focuses, and Quality of staff resources criteria. It has been the Secretary's experience in this program that overseas opportunities and activities have been critical to providing successful training options for students and professional development opportunities for faculty. Therefore, the Secretary believes that it is more appropriate and more clearly related to the purpose of the National Resource Centers Program to ask questions regarding overseas activities in the context of curriculum design and staff resources. The Secretary proposes to insert in this section a modified Outreach activities criterion. Proposed changes to this criterion reflect the Secretary's experience that outreach to postsecondary institutions, business, the media, and the general public is frequently overlooked in favor of elementary and secondary school outreach. By specifying separate point allocations for different kinds of outreach, the Secretary hopes to emphasize the importance to the National Resource Centers Program of outreach to all communities.

Section 656.21(j). The Secretary proposes to eliminate the current Need and potential impact criterion due to the inclusion of related questions under the proposed Program planning and budget and Impact and evaluation criteria. The Secretary proposes to replace this criterion with the current Degree to which priorities are served criterion, decreasing the point value from 20 points to 10. It has been the Secretary's experience that most proposals submitted for competitions under this program succeed in securing almost all of the points assigned to the competitive priority. A 20-point allocation to the competitive priority can result in applications with weaker scores on the mandatory criteria outscoring more fundamentally sound applications that do not meet the priority. A 10-point competitive priority allocation would continue to ensure that quality proposals that meet the competitive priority are funded before quality proposals that do not meet the priority. The Secretary proposes to decrease the total possible points allocated for priorities in order to maintain proportion in the competition and to ensure that only high quality proposals are funded.

Section 656.21(k). The Secretary proposes to delete this paragraph since the Outreach activities criterion would be included as previously noted.

Section 656.21(l). The Secretary proposes to delete this paragraph since the Degree to which priorities are served criterion would be included as previously noted.

Section 656.22. What selection criteria does the Secretary use to evaluate an application for an undergraduate center?

Like the criteria for comprehensive centers, the proposed undergraduate center selection criteria incorporate most aspects of the current criteria but are restructured to enable applicants to present the appropriate information more succinctly and with less repetition. The same selection criteria proposed for comprehensive centers are proposed for undergraduate centers, with small variances in point values and questions. The primary difference is that, for undergraduate centers, only questions related to undergraduate training programs are asked, while the comprehensive center selection criteria encompass undergraduate, graduate, and professional training programs.

Section 656.22(a). As in the comprehensive centers selection criteria, the Secretary proposes to replace the Plan of operation criterion with a criterion called Program planning and budget. The Program planning and budget criterion incorporates related elements of the current Plan of operation, Budget and cost effectiveness, and Need and potential impact criteria. It has been the Secretary's experience that the language of these current criteria requires modification in order to avoid confusion among applicants and peer reviewers regarding the meaning of the questions asked. Additionally, the separation of these related elements into individual criteria frequently causes applicants to repeat the same information under several guises. The Secretary proposes to clarify information to be presented and eliminate the need for repetition by asking very explicit questions regarding the administration, cost-effectiveness, quality, and long-term impact of proposed activities in one criterion.

Section 656.22(b). As in the comprehensive centers selection criteria, the Secretary proposes to replace the Quality of key personnel criterion with a criterion called Quality of staff resources. The staff resources criterion would ask for the same kind of information as the current key personnel criterion, but would also require more explicit information to be presented regarding faculty and staff involvement in center activities and oversight and professional development opportunities.

Section 656.22(c). As in the comprehensive center selection criteria, the Secretary proposes to eliminate the current Budget and cost effectiveness criterion due to relocating similar questions under the proposed Program planning and budget criterion. The Secretary proposes a new Impact and evaluation criterion that would combine related aspects of the current Need and potential impact, Evaluation plan, and Plan of operation criteria. The combination of these questions in one criterion is logical due to the interrelatedness of questions about past performance and evaluating future performance.

Section 656.22(d). The Secretary proposes to eliminate the current Evaluation plan criterion due to the inclusion of similar questions under the proposed Impact and evaluation criterion and to redesignate the current criterion Commitment to the subject area on which the center focuses, with a minor modification of language in order to identify the information to be presented.

Section 656.22(e). As in the comprehensive center selection criteria, the Secretary proposes to modify and redesignate the Strength of library criterion. Due to the changes in information technology and the rising costs of maintaining traditional collections, a library's book and periodical holdings are no longer the only factor that should be considered in evaluating the strength of a National Resource Center's library. The proposed regulations would clarify information to be presented and take into account that library resources can be provided in print and non-print media, through cooperative collections and access arrangements with other library collections, and through on-line, electronic data bases.

Section 656.22(f). As in the comprehensive center selection criteria,

the Secretary proposes to add a new criterion called Quality of the center's non-language instructional program. The proposed criterion would incorporate related elements of the current Quality of the center's instructional program and Quality of the center's relationships within the institution criteria. The Secretary believes that including all questions related to non-language course offerings in one section would allow grantees to streamline their proposals and avoid repetition. It has been the Secretary's experience that combining questions about non-language and language courses in the same criterion can lead to applicants neglecting to provide full information about both non-language and language training. For that reason, the Secretary proposes to ask parallel questions regarding the quality of language and non-language training under two separate criteria. It is the opinion of the Secretary that separate criteria would emphasize the importance to the National Resource Centers Program of both language and area or international studies training.

Section 656.22(g). The Secretary proposes to address under this criterion the Quality of the center's language instructional program. Questions asked under this criterion are similar to questions currently asked under Quality of the center's instructional program criterion but more specifically identify information to be provided.

Section 656.22(h). As in the comprehensive center selection criteria, the Secretary proposes to eliminate the current Quality of the center's relationships within the institution criterion due to the inclusion of similar questions under the proposed Quality of the center's non-language instructional program criterion. The Secretary proposes a new Quality of curriculum design criterion that would combine elements of the current Quality of the center's relationships within the institution and Overseas activities criteria. The new criterion would allow applicants to focus on the issue of training options for undergraduate students within the context of a single criterion.

Section 656.22(i). The Secretary proposes to eliminate the current Overseas activities criterion due to the inclusion of related questions under the proposed Quality of curriculum design, Commitment to the subject area on which the center focuses, and Quality of staff resources criteria. It has been the Secretary's experience in this program that overseas activities have been critical to providing successful training options for students and professional development opportunities for faculty. Therefore, the Secretary believes that it is more appropriate and more clearly related to the purpose of the National Resource Centers Program to ask questions regarding overseas activities in the context of curriculum design and staff resources. The Secretary proposes to add under this section a modified Outreach activities criterion. Proposed changes to this criterion reflect the Secretary's experience that outreach to postsecondary institutions, business, the media, and the general public is frequently overlooked in favor of elementary and secondary school outreach. By specifying separate point allocations for different kinds of outreach, the Secretary hopes to emphasize the importance to the National Resource Centers Program of outreach to all communities.

Section 656.22(j). As in the comprehensive center selection criteria, the Secretary proposes to eliminate the current Need and potential impact criterion due to the inclusion of related questions under the proposed Program planning and budget and Impact and evaluation criteria. The Secretary proposes to replace this criterion with the current Degree to which priorities are served criterion, decreasing the point value from 20 points to 10. It has been the Secretary's experience that most proposals submitted for competitions under this program succeed in securing almost all of the points assigned to the competitive priority. A 20-point allocation to the competitive priority can result in applications with weaker scores on the mandatory criteria outscoring more fundamentally sound applications that do not meet the priority. A 10-point competitive priority allocation would continue to ensure that quality proposals that meet the competitive priority are funded before quality proposals that do not meet the priority. The Secretary proposes to decrease the total possible points allocated for priorities in order to maintain proportion in the competition and to ensure that only high quality proposals are funded.

Section 656.22(k). The Secretary proposes to delete this paragraph since the Outreach activities criterion would be included as previously noted.

Section 656.22(l). The Secretary proposes to delete this paragraph since the Degree to which priorities are served criterion would be included as previously noted.

Section 656.23. What priorities may the Secretary establish?

The Secretary proposes two modifications to this section that would help to clarify and expand possible funding priorities.

Section 656.23(a)(3). The Secretary proposes to clarify that intensive language instruction is not limited to 10 contact hours per week by adding the phrase ''or more.'' Ten contact hours of instruction per week is normally considered the minimum for what constitutes intensive language training rather than the standard.

Section 656.23(a)(4). The Secretary proposes to expand the list of types of activities to be carried out by adding ''course development.'' Course development is an important tool for strengthening training programs and, therefore, is in keeping with the purpose of the National Resource Centers Program.

Executive Order 12866

Clarity of the Regulations

Executive Order 12866 requires each agency to write regulations that are easy to understand.

The Secretary invites comments on how to make these proposed regulations easier to understand, including answers to questions such as the following: (1) Are the requirements in the regulations clearly stated? (2) Do the regulations contain technical terms or other wording that interfere with their clarity? (3) Does the format of the regulations (grouping and order of sections, use of headings, paragraphing, etc.) aid or reduce their clarity? Would the regulations be easier to understand if they were divided into more (but shorter) sections? (A ''section'' is preceded by the symbol ''§'' and a numbered heading; for example, § 656.20 *How does the Secretary evaluate an application*?) (4) Is the description of the proposed regulations in the ''Supplementary Information'' section of this preamble helpful in understanding the proposed regulations? How could this description be more helpful in making the proposed regulations easier to understand? (5) What else could the Department do to make the regulations easier to understand?

A copy of any comments that concern how the Department could make these proposed regulations easier to understand should also be sent to Stanley M. Cohen, Regulations Quality Officer, U.S. Department of Education, 600 Independence Avenue, SW. (Room 5100 FB–10B), Washington, DC 20202–2241.

Regulatory Flexibility Act Certification

The Secretary certifies that these proposed regulations would not have a

significant economic impact on a substantial number of small entities.

These proposed regulations merely correct or simplify and clarify provisions contained in previous regulations and would impose minimal requirements to ensure the proper expenditure of program funds. The small entities that would be affected by these proposed regulations are small institutions of higher education receiving Federal funds under this program. However, the regulations would not have a significant economic impact on the institutions affected because the regulations would not impose excessive regulatory burdens or require unnecessary Federal supervision.

Paperwork Reduction Act of 1995

Sections 656.21 and 656.22 contain information collection requirements. As required by the Paperwork Reduction Act of 1995 (44 U.S.C 3507(d)), the Department of Education has submitted a copy of these sections to the Office of Management and Budget (OMB) for its review.

Collection of Information: National Resource Centers Program for Foreign Language and Area Studies or Foreign Language and International Studies.

Institutions of higher education and consortia of institutions of higher education are eligible to apply for grants under these regulations. The information to be collected is specified by the proposed selection criteria and includes information currently collected under regulations for this program. This information is needed and used by the Department to make grants.

The Secretary estimates that this information collection will decrease the current estimated burden of 155 hours per response to 100 hours per response. The estimated burden includes the time for reviewing instructions, searching existing data sources, gathering and maintaining the data needed, and completing and reviewing the application to be submitted. Competitions for the National Resource Centers Program are held every three years, with approximately 150 respondents per competition.

Organizations and individuals desiring to submit comments on the information collection requirements should direct them to the Office of Information and Regulatory Affairs, OMB, Room 10235, New Executive Office Building, Washington, DC 20503; Attention: Wendy Taylor.

The Department considers comments by the public on these proposed collections of information in—

- Evaluating whether the proposed collections of information are necessary for the proper performance of the functions of the Department, including whether the information will have practical utility;
- Evaluating the accuracy of the Department's estimate of the burden of the proposed collections of information, including the validity of the methodology and assumptions used;
- Enhancing the quality, usefulness, and clarity of the information to be collected; and
- Minimizing the burden of the collection of information on those who are to respond, including through the use of appropriate automated, electronic, mechanical, or other technological collection techniques or other forms of information technology; e.g., permitting electronic submission of responses.

OMB is required to make a decision concerning the collections of information contained in these proposed regulations between 30 and 60 days after publication of this document in the Federal Register. Therefore, a comment to OMB is best assured of having its full effect if OMB receives it within 30 days of publication. This does not affect the deadline for the public to comment to the Department on the proposed regulations.

Intergovernmental Review

This program is subject to the requirements of Executive Order 12372 and the regulations in 34 CFR Part 79. The objective of the Executive order is to foster an intergovernmental partnership and a strengthened federalism by relying on processes developed by State and local governments for coordination and review of proposed Federal financial assistance.

In accordance with the order, this document is intended to provide early notification of the Department's specific plans and actions for this program.

Invitation to Comment

Interested persons are invited to submit comments and recommendations regarding these proposed regulations.

All comments submitted in response to these proposed regulations will be available for public inspection, during and after the comment period, in Suite 600B, Portals Building, 1280 Maryland Avenue, SW., Washington, DC, between the hours of 8:30 a.m. and 4:00 p.m., Monday through Friday of each week except Federal holidays.

Assessment of Educational Impact

The Secretary particularly requests comments on whether the proposed regulations in this document would require transmission of information that is being gathered by or is available from any other agency or authority of the United States.

List of Subjects in 34 CFR Part 656

Colleges and universities, Education, International education, Reporting and recordkeeping requirements.

(Catalog of Federal Domestic Assistance Number 84.015)

Dated: March 25, 1996.

David A. Longanecker,

Assistant Secretary for Postsecondary Education.

The Secretary proposes to amend Title 34 of the Code of Federal Regulations by revising Part 656 as follows:

PART 656—NATIONAL RESOURCE CENTERS FOR FOREIGN LANGUAGE AND AREA STUDIES OR FOREIGN LANGUAGE AND INTERNATIONAL STUDIES

1. The authority citation for Part 656 continues to read as follows:

Authority: 20 U.S.C. 1122, unless otherwise noted.

§ 656.3 [Amended]

2. Section 656.3 is amended by adding ''training and'' before ''research'' in paragraph (e)(2).

3. Section 656.7 is amended by removing the word ''and'' at the end of paragraph (d)(3), removing the period at the end of paragraph (d)(4) and adding, in its place, ''; and'', and adding paragraph (d)(5) to read as follows:

§ 656.7 What definitions apply?

* * * * *

(d) * * *

(5) Engages in curriculum development and community outreach.

* * * * *

4. Section 656.20 is amended by revising paragraph (b) to read as follows:

§ 656.20 How does the Secretary evaluate an application?

* * * * *

(b) In general, the Secretary awards up to 150 possible points for these criteria. However, if the criterion in §§ 656.21(l) or 656.22(l) is used, the Secretary awards up to 160 possible points. The maximum possible points for each criterion are shown in parentheses.

5. Section 656.21 is revised to read as follows:

§ 656.21 What selection criteria does the Secretary use to evaluate an application for a comprehensive center?

The Secretary uses the following criteria in evaluating an application for a comprehensive center:

(a) *Program planning and budget.* (20 points) The Secretary reviews each application to determine—

(1) The extent to which the activities for which the applicant seeks funding are of high quality and directly related to the purpose of the National Resource Centers Program (5 points);

(2) The extent to which the applicant provides a development plan or timeline demonstrating how the proposed activities will contribute to a strengthened program and whether the applicant uses its resources and personnel effectively to achieve the proposed objectives (5 points);

(3) The extent to which the costs of the proposed activities are reasonable in relation to the objectives of the program (5 points); and

(4) The long-term impact of the proposed activities on the institution's undergraduate, graduate, and professional training programs (5 points).

(b) *Quality of staff resources.* (20 points) The Secretary reviews each application to determine—

(1) The extent to which teaching faculty and other staff are qualified for the current and proposed center activities and training programs, are provided professional development opportunities (including overseas experience), and participate in teaching, supervising, and advising students (10 points);

(2) The adequacy of center staffing and oversight arrangements, including outreach and administration and the extent to which faculty from a variety of departments, professional schools, and the library are involved (5 points); and

(3) The extent to which the applicant, as part of its nondiscriminatory employment practices, encourages applications for employment from persons who are members of groups that have been traditionally underrepresented, such as members of racial or ethnic minority groups, women, persons with disabilities, and the elderly (5 points).

(c) *Impact and evaluation.* (20 points) The Secretary reviews each application to determine—

(1) The extent to which the center's activities and training programs have a significant impact on the university, community, region, and the Nation as shown through indices such as enrollments, graduate placement data, participation rates for events, and usage of center resources; and the extent to which the applicant supplies a clear description of how the applicant will provide equal access and treatment of eligible project participants who are members of groups that have been traditionally underrepresented, such as members of racial or ethnic minority groups, women, persons with disabilities, and the elderly (10 points); and

(2) The extent to which the applicant provides an evaluation plan that will be comprehensive and objective and that will produce quantifiable, outcome-measure-oriented data; and the extent to which recent evaluations have been used to improve the applicant's program (10 points).

(d) *Commitment to the subject area on which the center focuses.* (10 points) The Secretary reviews each application to determine the extent to which the institution provides financial and other support to the operation of the center, teaching staff for the center's subject area, library resources, linkages with institutions abroad, outreach activities, and qualified students in fields related to the center.

(e) *Strength of library.* (10 points) The Secretary reviews each application to determine—

(1) The strength of the institution's library holdings (both print and non-print, English and foreign language) in the subject area and at the educational levels (graduate, professional, undergraduate) on which the center focuses; and the extent to which the institution provides financial support for the acquisition of library materials and for library staff in the subject area of the center (5 points); and

(2) The extent to which research materials at other institutions are available to students through cooperative arrangements with other libraries or on-line databases and the extent to which teachers, students, and faculty from other institutions are able to access the library's holdings (5 points).

(f) *Quality of the center's non-language instructional program.* (20 points) The Secretary reviews each application to determine—

(1) The quality and extent of the center's course offerings in a variety of disciplines, including the extent to which courses in the center's subject matter are available in the institution's professional schools (5 points);

(2) The extent to which the center offers depth of specialized course coverage in one or more disciplines of the center's subject area (5 points);

(3) The extent to which the institution employs a sufficient number of teaching faculty to enable the center to carry out its purposes and the extent to which teaching assistants are provided with pedagogy training (5 points); and

(4) The extent to which interdisciplinary courses are offered for undergraduate and graduate students (5 points).

(g) *Quality of the center's language instructional program.* (20 points) The Secretary reviews each application to determine—

(1) The extent to which the center provides instruction in the languages of the center's subject area and the extent to which students enroll in those language courses (5 points);

(2) The extent to which the center provides three or more levels of language training and the extent to which courses in disciplines other than language, linguistics, and literature are offered in appropriate foreign languages (5 points);

(3) Whether sufficient numbers of language faculty are available to teach the languages and levels of instruction described in the application and the extent to which language teaching staff (including faculty and teaching assistants) have been exposed to current language pedagogy training appropriate for performance-based teaching (5 points); and

(4) The quality of the language program as measured by the performance-based instruction being used or developed, the adequacy of resources for language teaching and practice, and language proficiency requirements (5 points).

(h) *Quality of curriculum design.* (15 points) The Secretary reviews each application to determine—

(1) The extent to which the center's curriculum has incorporated undergraduate instruction in the applicant's area or topic of specialization into baccalaureate degree programs (for example, major, minor, or certificate programs) and the extent to which these programs and their requirements (including language requirements) are appropriate for a center in this subject area and will result in an undergraduate training program of high quality (5 points);

(2) The extent to which the center's curriculum provides training options for graduate students from a variety of disciplines and professional fields and the extent to which these programs and their requirements (including language requirements) are appropriate for a center in this subject area and result in graduate training programs of high quality (5 points); and

(3) The extent to which the center provides academic and career advising

services for students; the extent to which the center has established formal arrangements for students to conduct research or study abroad and the extent to which these arrangements are used; and the extent to which the institution facilitates student access to other institutions' study abroad and summer language programs (5 points).

(i) *Outreach activities.* (15 points) The Secretary reviews each application to determine the extent to which the center demonstrates a significant and measurable regional and national impact of, and faculty and professional school involvement in, outreach activities that involve—

(1) Elementary and secondary schools (5 points);

(2) Postsecondary institutions (5 points); and

(3) Business, media, and the general public (5 points).

(j) *Degree to which priorities are served.* (10 points) If, under the provisions of § 656.23, the Secretary establishes specific priorities for Centers, the Secretary considers the degree to which those priorities are being served.

(Authority: 20 U.S.C. 1122)

6. Section 656.22 is revised to read as follows:

§ 656.22 What selection criteria does the Secretary use to evaluate an application for an undergraduate center?

The Secretary uses the following criteria in evaluating an application for an undergraduate center:

(a) *Program planning and budget.* (20 points) The Secretary reviews each application to determine—

(1) The extent to which the activities for which the applicant seeks funding are of high quality and directly related to the purpose of the National Resource Centers Program (5 points);

(2) The extent to which the applicant provides a development plan or timeline demonstrating how the proposed activities will contribute to a strengthened program and whether the applicant uses its resources and personnel effectively to achieve the proposed objectives (5 points);

(3) The extent to which the costs of the proposed activities are reasonable in relation to the objectives of the program (5 points); and

(4) The long-term impact of the proposed activities on the institution's undergraduate training program (5 points).

(b) *Quality of staff resources.* (20 points) The Secretary reviews each application to determine—

(1) The extent to which teaching faculty and other staff are qualified for the current and proposed center activities and training programs, are provided professional development opportunities (including overseas experience), and participate in teaching, supervising, and advising students (10 points);

(2) The adequacy of center staffing and oversight arrangements, including outreach and administration and the extent to which faculty from a variety of departments, professional schools, and the library are involved (5 points); and

(3) The extent to which the applicant, as part of its nondiscriminatory employment practices, encourages applications for employment from persons who are members of groups that have been traditionally underrepresented, such as members of racial or ethnic minority groups, women, persons with disabilities, and the elderly (5 points).

(c) *Impact and evaluation.* (20 points) The Secretary reviews each application to determine—

(1) The extent to which the center's activities and training programs have a significant impact on the university, community, region, and the Nation as shown through indices such as enrollments, graduate placement data, participation rates for events, and usage of center resources; the extent to which students matriculate into advanced language and area or international studies programs or related professional programs; and the extent to which the applicant supplies a clear description of how the applicant will provide equal access and treatment of eligible project participants who are members of groups that have been traditionally underrepresented, such as members of racial or ethnic minority groups, women, persons with disabilities, and the elderly (10 points); and

(2) The extent to which the applicant provides an evaluation plan that will be comprehensive and objective and produce quantifiable, outcome-measure-oriented data; and the extent to which recent evaluations have been used to improve the applicant's program (10 points).

(d) *Commitment to the subject area on which the center focuses.* (10 points) The Secretary reviews each application to determine the extent to which the institution provides financial and other support to the operation of the center, teaching staff for the center's subject area, library resources, linkages with institutions abroad, outreach activities, and qualified students in fields related to the center.

(e) *Strength of library.* (10 points) The Secretary reviews each application to determine—

(1) The strength of the institution's library holdings (both print and non-print, English and foreign language) in the subject area and at the educational levels (graduate, professional, undergraduate) on which the center focuses; and the extent to which the institution provides financial support for the acquisition of library materials and for library staff in the subject area of the center (5 points); and

(2) The extent to which research materials at other institutions are available to students through cooperative arrangements with other libraries or on-line databases and the extent to which teachers, students, and faculty from other institutions are able to access the library's holdings (5 points).

(f) *Quality of the center's non-language instructional program.* (20 points) The Secretary reviews each application to determine—

(1) The quality and extent of the center's course offerings in a variety of disciplines (5 points);

(2) The extent to which the center offers depth of specialized course coverage in one or more disciplines of the center's subject area (5 points);

(3) The extent to which the institution employs a sufficient number of teaching faculty to enable the center to carry out its purposes and the extent to which teaching assistants are provided with pedagogy training (5 points); and

(4) The extent to which interdisciplinary courses are offered for undergraduate students (5 points).

(g) *Quality of the center's language instructional program.* (20 points) The Secretary reviews each application to determine—

(1) The extent to which the center provides instruction in the languages of the center's subject area and the extent to which students enroll in those language courses (5 points);

(2) The extent to which the center provides three or more levels of language training and the extent to which courses in disciplines other than language, linguistics, and literature are offered in appropriate foreign languages (5 points);

(3) Whether sufficient numbers of language faculty are available to teach the languages and levels of instruction described in the application and the extent to which language teaching staff (including faculty and teaching assistants) have been exposed to current language pedagogy training appropriate for performance-based teaching (5 points); and

(4) The quality of the language program as measured by the performance-based instruction being

used or developed, the adequacy of resources for language teaching and practice, and language proficiency requirements (5 points).

(h) *Quality of curriculum design.* (15 points) The Secretary reviews each application to determine—

(1) The extent to which the center's curriculum has incorporated undergraduate instruction in the applicant's area or topic of specialization into baccalaureate degree programs (for example, major, minor, or certificate programs) and the extent to which these programs and their requirements (including language requirements) are appropriate for a center in this subject area and will result in an undergraduate training program of high quality (10 points); and

(2) The extent to which the center provides academic and career advising services for students; the extent to which the center has established formal arrangements for students to conduct research or study abroad and the extent to which these arrangements are used; and the extent to which the institution facilitates student access to other institutions' study abroad and summer language programs (5 points).

(i) *Outreach activities.* (15 points) The Secretary reviews each application to determine the extent to which the center demonstrates a significant and measurable regional and national impact of, and faculty and professional school involvement in, outreach activities that involve—

(1) Elementary and secondary schools (5 points);

(2) Postsecondary institutions (5 points); and

(3) Business, media and the general public (5 points).

(j) *Degree to which priorities are served.* (10 points) If, under the provisions of § 656.23, the Secretary establishes specific priorities for centers, the Secretary considers the degree to which those priorities are being served.

(Authority: 20 U.S.C. 1122)

7. Section 656.23 is amended by revising paragraphs (a)(3) and (a)(4) to read as follows:

§ 656.23 What priorities may the Secretary establish?

(a) * * *

(3) Level or intensiveness of language instruction, such as intermediate or advanced language instruction, or instruction at an intensity of 10 contact hours or more per week.

(4) Types of activities to be carried out, for example, cooperative summer intensive language programs, course development, or teacher training activities.

* * * * *

[FR Doc. 96–7595 Filed 3–27–96; 8:45 am]

BILLING CODE 4000–01–P

federal register

Thursday
March 28, 1996

Part VII

Department of Education

34 CFR Part 657

Higher Education Programs in Modern Foreign Language Training and Area Studies—Foreign Language and Area Studies Fellowships Program; Proposed Rule

DEPARTMENT OF EDUCATION

34 CFR Part 657

RIN 1840–AC28

Higher Education Programs in Modern Foreign Language Training and Area Studies—Foreign Language and Area Studies Fellowships Program

AGENCY: Department of Education.

ACTION: Notice of Proposed Rulemaking.

SUMMARY: The Secretary proposes to amend the regulations governing the Higher Education Programs in Modern Foreign Language Training and Area Studies—Foreign Language and Area Studies (FLAS) Fellowships Program. These amendments are needed in order to improve the application review process and to update the regulations in light of developments in the field of foreign language, area, and international studies. In the spirit of reinventing government, the goal of the proposed changes is to markedly reduce the burden associated with the application review process. These regulations are intended to (a) reduce the burden on applicants and readers by clarifying and restructuring selection criteria to remove ambiguity and eliminate repetition of information presented in applications, (b) facilitate funding decisions by providing a larger possible point spread for greater differentiation of rankings, (c) simplify the application process for applicants, improve the cost-effectiveness of the program, and standardize program management by adopting the fellowship award allocation system currently used to administer other Federal fellowship programs, and (d) improve program quality, efficiency, and flexibility by adopting changes program management experience shows to be appropriate.

DATES: Comments must be received on or before April 29, 1996.

ADDRESSES: All comments concerning these proposed regulations should be addressed to Sara West, U.S. Department of Education, 600 Independence Avenue, S.W., Suite 600B, Portals Building, Washington, D.C. 20202–5331. Comments may also be sent through the Internet to ''FLAS—Fellowship@ed.gov''.

Comments that concern information collection requirements must be sent to the Office of Management and Budget at the address listed in the Paperwork Reduction Act section of this preamble. A copy of those comments may also be sent to the Department representative named in the preceding paragraph.

FOR FURTHER INFORMATION CONTACT: Sara West. Telephone: (202) 401–9782. Individuals who use a telecommunications device for the deaf (TDD) may call the Federal Information Relay Service (FIRS) at 1–800–877–8339 between 8 a.m. and 8 p.m., Eastern time, Monday through Friday.

SUPPLEMENTARY INFORMATION:

Background

The Foreign Language and Area Studies Fellowships Program is one of several international education programs authorized under Part A of Title VI of the Higher Education Act of 1965, as amended (HEA). The main provisions of the regulations govern the awarding of grants designed to provide fellowship assistance to students enrolled in advanced programs of modern foreign language and area or international studies.

In the spirit of reinventing government, it is the Secretary's goal to simplify the application process and management of the Foreign Language and Area Studies Fellowships Program to benefit the public. The Secretary intends the proposed changes to add clarity to the review process, to decrease the current burden on applicants and peer reviewers, to facilitate the application of uniform standards among peer reviewers and in Federal fellowship program management, to increase cost-effectiveness of the program, and to increase flexibility in program management for funded grantees and for the Secretary.

The Secretary proposes to amend the regulations for the Foreign Language and Area Studies Fellowships Program by modifying the selection criteria for applications, by eliminating references to undergraduate programs and fellowship recipients in keeping with statutory requirements, by adopting a new system of allocating fellowship awards, and by easing restrictions on the use of fellowship awards abroad and clarifying that only academic year awards may be used for research abroad.

Selection Criteria. The selection criteria currently used are very general, leading to some misinterpretation of questions asked, frequent repetition of information, and inclusion of information that is not pertinent to the purpose of the Foreign Language and Area Studies Fellowships Program. The proposed changes seek to retain much of the sense of the current criteria while removing ambiguity regarding requested information. The purpose of the changes is to clarify what information should be presented so that (a) all applicants will provide more focused information necessary for evaluation of a proposal under this program, (b) applicants will be able to present all relevant information within fewer pages of the proposal narrative, and (c) peer reviewers will be able to more easily and accurately evaluate and rank proposals based on comparative strengths.

A reorganized, broader point scale and clearly identified point allocations for individual paragraphs of the technical review criteria are proposed in order to (a) enable peer reviewers to score more carefully and accurately differentiate between proposals of high caliber, (b) discourage peer reviewers from overlooking any individual question to be scored, and (c) clarify for peer reviewers and applicants exactly what requested information corresponds to each point value.

Undergraduate References. The Higher Education Amendments of 1992, Pub. L. 102–325, amended section 603 of the HEA to limit the awarding of FLAS fellowships to graduate students. For that reason, the Secretary eliminates references to undergraduate students or programs and use of ambiguous terms such as ''advanced.'' The purpose of these changes is to bring the regulations in line with the authorizing statute and to clarify program requirements for applicants and grantees.

System of Allocation. The Secretary proposes to increase cost-effectiveness, simplify the application process and program management for grantees, and bring the Foreign Language and Area Studies Fellowships Program more in line with other government fellowship programs by amending the system of allocation. Under the system of allocation currently used to administer this program, a FLAS fellowship consists of a student subsistence allowance and tuition plus all required fees. Grantees are expected to submit in their proposal budgets a variety of tuition rates for graduate students at differing levels of study and enrolled in different academic programs; for example, public institutions provide different rates based upon residency requirements, while both public and private institutions often have varying tuition rates for graduate students enrolled in arts and sciences or professional degree programs or at the dissertation level. Grant monies are then allocated based on a combination of awards at a variety of tuition rates for an individual grantee institution. Because the rates supplied are projections based on rates in effect at the time of application and not actual prospective tuition rates, and because the grantee institutions do not know at

the time of the grant competition which students will compete successfully for awards, the current system of allocation is imprecise. While the Secretary might allocate funds for five awards to an institution, there is no guarantee that the institution will make five awards in the amounts assumed. Depending on the students selected, it might actually make two awards at a high tuition rate or seven awards at a low tuition rate.

Under the proposed system of allocation, a FLAS fellowship consists of a student subsistence allowance and a standard institutional payment (rather than full tuition plus fees) to be established by the Secretary and announced in the application notice. This system of allocation is commonly referred to as the ''cost-of-education allowance'' system. By applying for an allocation of fellowship awards, the institution agrees to accept the institutional payment published in the application notice in lieu of any additional costs of tuition and fees. In cases in which the institutional payment is greater than the actual cost of tuition and fees at the institution, the excess institutional payment funds must be applied toward additional fellowship awards. The purpose of this amendment is to (a) simplify the budget portion of the application process for applicants; (b) make the Foreign Language and Area Studies Fellowships Program more ''user-friendly'' for the public by adopting a system of allocation currently used for a variety of Federal fellowship programs administered by the U.S. Department of Education and other agencies; (c) simplify grantee institutions' own competitions for fellowship candidates by treating each applicant equally, regardless of tuition rate; (d) eliminate imprecision in how funds will actually be used by grantees and increase the accountability of grantee institutions by requiring them to make a minimum number of awards with their grant allocations; and (e) increase the cost-effectiveness of the program by requiring institutions with high tuition rates to accept a standard institutional payment in lieu of full tuition and fees.

Easing Limits on Overseas Use of Fellowships. Proposed changes to the limitations on the use of funds for overseas fellowships seek to expand grantees' program management options and clarify the appropriate use of awards. The requirement that students using awards at overseas language programs be at the advanced level of language study is expanded to include intermediate-level study for all eligible languages as well as beginning-level study of languages for which appropriate instruction is not available in the United States. Additional modifications are intended to clarify that only academic year awards may be used abroad for research, and summer fellowships are to be used for intensive language training rather than for short-term dissertation research.

Explanation of Changes

The Secretary proposes to make the following changes:

Section 657.1 What is the Foreign Language and Area Studies Fellowships Program?

Section 657.1(a). The Secretary proposes to modify this section to clarify that only graduate-level students are eligible to receive awards since the 1992 reauthorization of the HEA. The current language indicates that students who receive fellowships must be enrolled in ''advanced'' training. The Secretary believes that substituting the word ''graduate'' for ''advanced'' more clearly states the statutory requirement.

Section 657.2 Who is eligible to receive an allocation of fellowships?

Section 657.2(d). The Secretary proposes to eliminate the reference to the Undergraduate International Studies and Foreign Language Program because undergraduate students are no longer eligible to receive awards since the 1992 reauthorization of the HEA.

Section 657.3 Who is eligible to receive a fellowship?

Section 657.3(a)(3). The Secretary proposes to eliminate the entire paragraph referring to students who are permanent residents of the Trust Territory of the Pacific Islands, because there is no longer a Trust Territory of the Pacific Islands.

Section 657.20 How does the Secretary evaluate an institutional application for an allocation of fellowships?

Section 657.20(b). The Secretary proposes to expand the range of possible points for applications in order to enable peer reviewers in scoring to more carefully and accurately differentiate between proposals of high caliber. It has been the Secretary's experience that competition for grants under the Foreign Language and Area Studies Fellowships Program is strong; recent winning applicants have scored within a 15-point range on the current scale. As a result, there has been narrow point differentiation among winning applicants and the highest scoring unsuccessful applicants. The Secretary believes that expanding the possible point range would facilitate funding decisions by providing peer reviewers with a larger scale on which to rank applications, allowing for greater differentiation of scores for applications of similar but different merit. The changed point scale, reflecting changes in the selection criteria and their point allocations, would add 40 possible points for competitions for which there are no announced competitive priorities and 50 possible points for competitions for which competitive priorities have been announced.

Section 657.21 What criteria does the Secretary use in selecting institutions for an allocation of fellowships?

The Secretary proposes extensive changes in this section in order to improve the program's application review process and to reflect current standards in the field of foreign language, area and international studies. The proposed selection criteria identify specific information to be provided in an application, thereby facilitating proposal writing for applicants and evaluation for peer reviewers. The proposed criteria incorporate most aspects of the current criteria but are restructured to enable applicants to present information in a more succinct and less repetitious manner.

Section 657.21(a). The Secretary proposes to eliminate the current Plan of operation criterion and substitute a Foreign language and area studies awardee selection procedures criterion that incorporates elements of the current Plan of operation and Need and potential impact criteria. It has been the Secretary's experience that the language of the current criterion has led to some confusion among grantees and peer reviewers regarding what information should be presented. For example, one question in the Plan of operation criterion asks about the extent to which the objectives of the project relate to the purpose of the program. Applicants and peer reviewers are often uncertain whether ''program'' refers to the Foreign Language and Area Studies Fellowships Program or to the applicant's training program. The Secretary believes that the proposed language would eliminate uncertainty and assist applicants in writing, and peer reviewers in evaluating, proposals for fellowship awards.

Section 657.21(b). The Secretary proposes to replace the Quality of key personnel criterion with a criterion called Quality of staff resources. The staff resources criterion would ask the same kind of questions as the current key personnel criterion, but would also require explicit information to be

presented regarding faculty and staff involvement in fellowship program activities and oversight and professional development opportunities.

Section 657.21(c). The Secretary proposes to eliminate the current Evaluation plan criterion. The Secretary proposes an Impact and evaluation criterion that would combine related aspects of the current Need and potential impact, Evaluation plan, and Plan of operation criteria. Combining elements of these criteria is logical due to the interrelatedness of questions about past performance and evaluating future performance.

Section 657.21(d). The Secretary proposes to modify the language of the Commitment to the subject area on which the center or program focuses criterion by clarifying those areas for which institutional support should be identified. In the past, some applicant institutions have shown support for the applicant's students by offering matching funds or tuition waivers for fellowship grants received. Although the Foreign Language and Area Studies Fellowships Program does not have a cost-matching requirement, the Secretary would like to encourage institutional efforts to promote the cost-effectiveness of the program as well as institutional commitment to the applicant's training program. For this reason, this criterion also asks applicants to provide information about the extent to which the institution provides financial support to graduate students in fields related to the applicant's teaching program.

Section 657.21(e). The Secretary proposes to modify and redesignate the Strength of library criterion. Due to the changes in information technology and the rising costs of maintaining traditional collections, a library's book and periodical holdings are no longer the only factor that should be considered in evaluating the strength of an applicant institution's library. The proposed regulations would clarify information to be presented and take into account that library resources can be provided in print and non-print media, through cooperative collections and access arrangements with other library collections, and through on-line, electronic data bases.

Section 657.21(f). The Secretary proposes to add a new criterion called Quality of the applicant's non-language instructional program. The proposed criterion would incorporate related elements of the current Quality of the applicant's instructional program and Quality of the applicant's relationships within the institution criteria. The Secretary believes that including all questions related to non-language course offerings in one section would allow grantees to streamline their proposals and avoid repetition. It has been the Secretary's experience that combining questions about non-language and language courses in the same criterion can lead to applicants neglecting to provide full information about both non-language and language training. For that reason, the Secretary proposes to ask parallel questions regarding the quality of language and non-language training under two separate criteria. It is the opinion of the Secretary that separate criteria would emphasize the importance to the Foreign Language and Area Studies Fellowships Program of both language and area or international studies training.

Section 657.21(g). The Secretary proposes to address under this criterion the Quality of the applicant's language instructional program. Questions asked under this criterion are similar to questions currently asked under Quality of the applicant's instructional program criterion but more specifically identify information to be provided.

Section 657.21(h). The Secretary proposes to replace the current Overseas activities criterion with a criterion called Quality of curriculum design. Relevant questions about overseas activities would be asked under the proposed Quality of curriculum design, Commitment to the subject area on which the applicant focuses, and Quality of staff resources criteria. It has been the Secretary's experience in this program that overseas activities have been critical to providing successful training options for students and professional development opportunities for faculty. Therefore, the Secretary believes that it is more appropriate and more clearly related to the purpose of the Foreign Language and Area Studies Fellowships Program to ask questions regarding overseas activities in the context of curriculum design and staff resources. The proposed Quality of curriculum design criterion would combine elements of the current Overseas activities and Quality of the applicant's relationships within the institution criteria. The new criterion would allow applicants to focus on the issue of training options for students within the context of a single criterion.

Section 657.21(i). The Secretary proposes to eliminate the current Need and potential impact criterion because related questions would be asked under the proposed Foreign language and area studies fellowships awardee selection procedures and Impact and evaluation criteria. The Secretary proposes to redesignate the current Priorities criterion as § 657.21(i) and to decrease the point value from 20 points to 10. It has been the Secretary's experience that most proposals submitted for competitions under this program succeed in securing almost all of the points allocated to the competitive priority. A 20-point allocation to the competitive priority can result in applications with weaker scores on the mandatory criteria ranking higher than quality proposals that do not meet the priority. A 10-point competitive priority allocation would continue to ensure that quality proposals that meet the competitive priority are funded before quality proposals that do not meet the priority. The Secretary proposes to decrease the total possible points allocated for priorities in order to maintain proportion in the competition and to ensure that only high quality proposals are funded.

Section 657.21(j). The Secretary proposes to eliminate this paragraph because the Priorities criterion would be included under § 657.21(i).

Section 657.31 What is the amount of a fellowship?

The Secretary proposes to change the system of allocation of fellowship award monies in order to simplify the administration of awards for grantees, increase cost-effectiveness of the program, and increase uniformity of procedures among federally funded fellowship programs. The Secretary proposes to specify that each fellowship awarded would consist of a standard institutional payment and a subsistence allowance to be announced in the application notice published in the Federal Register. The Secretary also proposes to delete references to education levels of recipients since all recipients must be at the graduate level.

Section 657.32 What is the payment procedure for fellowships?

Section 657.32(d). The Secretary proposes to limit the use of fellowship funds by stating that funds not used by one fellowship recipient for reasons of withdrawal are to be used for alternate recipients to the extent that funds are available for a full subsistence allowance. In addition, if actual tuition rates are less than the institutional payment, excess funds must be used to fund additional fellowships to the extent that funds are available for a full subsistence allowance. This provision would maximize the cost-efficiency of the fellowship funds by ensuring that low-tuition institutions use excess funds to support additional fellows.

Section 657.33 What are the limitations on the use of funds for overseas fellowships?

The Secretary proposes changes to this section that would ease restrictions on and clarify appropriate use of overseas awards. It has been the Secretary's experience that students at an intermediate level of language study can benefit as much from an overseas study experience as advanced students if enrolled in a high-quality language program. Furthermore, appropriate instruction (particularly for less-commonly-taught languages) is not always available in the United States.

Section 657.33(b)(1). The Secretary proposes to allow students at the intermediate level of language study to enroll in overseas language programs. Currently, only advanced students may use awards abroad. Additionally, the Secretary proposes to allow the use of fellowship awards for overseas study at the beginning level of languages for which instruction is frequently not available in the United States.

Section 657.33(b)(2). In order to clarify for grantees that summer fellowships are to be used for intensive language training rather than short-term dissertation research, the Secretary proposes to specify that awards may be approved for dissertation research during the academic year only.

Executive Order 12866

Clarity of the Regulations

Executive Order 12866 requires each agency to write regulations that are easy to understand.

The Secretary invites comments on how to make these proposed regulations easier to understand, including answers to questions such as the following: (1) Are the requirements in the regulations clearly stated? (2) Do the regulations contain technical terms or other wording that interferes with their clarity? (3) Does the format of the regulations (grouping and order of sections, use of headings, paragraphing, etc.) aid or reduce their clarity? Would the regulations be easier to understand if they were divided into more (but shorter) sections? (A ''section'' is preceded by the symbol ''§'' and a numbered heading; for example, § 657.2 *Who is eligible to receive an allocation of fellowships?*) (4) Is the description of the proposed regulations in the ''Supplementary Information'' section of this preamble helpful in understanding the proposed regulations? How could this description be more helpful in making the proposed regulations easier to understand? (5) What else could the Department do to make the regulations easier to understand?

A copy of any comments that concern how the Department could make these proposed regulations easier to understand should also be sent to Stanley M. Cohen, Regulations Quality Officer, U.S. Department of Education, 600 Independence Avenue, S.W. (Room 5100 FB–10B), Washington, D.C. 20202–2241.

Regulatory Flexibility Act Certification

The Secretary certifies that these proposed regulations would not have a significant economic impact on a substantial number of small entities.

These proposed regulations merely correct or simplify and clarify provisions contained in previous regulations and would impose minimal requirements to ensure the proper expenditure of program funds. The small entities that would be affected by these proposed regulations are institutions of higher education receiving Federal funds under this program. However, the regulations would not have a significant economic impact on the institutions affected because the regulations would not impose excessive regulatory burdens or require unnecessary Federal supervision.

Paperwork Reduction Act of 1995

Section 657.21 contains information collection requirements. As required by the Paperwork Reduction Act of 1995 (44 U.S.C. 3507(d)), the Department of Education has submitted a copy of this section to the Office of Management and Budget (OMB) for its review.

Collection of Information: Foreign Language and Area Studies Fellowships Program.

Institutions of higher education and consortia of institutions of higher education are eligible to apply for grants under these regulations. The information to be collected is specified by the proposed technical review criteria and includes information currently collected under regulations for this program. This information is needed and used by the Department to make grants.

The Secretary estimates that this information collection will decrease the current estimated burden of 155 hours per response to 100 hours per response. The estimated burden includes the time for reviewing instructions, searching existing data sources, gathering and maintaining the data needed, and completing and reviewing the application to be submitted. Competitions for the Foreign Language and Area Studies Fellowships Program are held every three years, with approximately 160 respondents per competition.

Organizations and individuals desiring to submit comments on the information collection requirements should direct them to the Office of Information and Regulatory Affairs, OMB, Room 10235, New Executive Office Building, Washington, D.C. 20503; Attention: Wendy Taylor.

The Department considers comments by the public on this proposed collection of information in—

- Evaluating whether the proposed collection of information is necessary for the proper performance of the functions of the Department, including whether the information will have practical utility;
- Evaluating the accuracy of the Department's estimate of the burden of the proposed collection of information, including the validity of the methodology and assumptions used;
- Enhancing the quality, usefulness, and clarity of the information to be collected; and
- Minimizing the burden of the collection of information on those who are to respond, including through the use of appropriate automated, electronic, mechanical, or other technological collection techniques or other forms of information technology; e.g., permitting electronic submission of responses.

OMB is required to make a decision concerning the collection of information contained in these proposed regulations between 30 and 60 days after publication of this document in the Federal Register. Therefore, a comment to OMB is best assured of having its full effect if OMB receives it within 30 days of publication. This does not affect the deadline for the public to comment to the Department on the proposed regulations.

Intergovernmental Review

This program is subject to the requirements of Executive Order 12372 and the regulations in 34 CFR Part 79. The objective of the Executive order is to foster an intergovernmental partnership and a strengthened federalism by relying on processes developed by State and local governments for coordination and review of proposed Federal financial assistance.

In accordance with the order, this document is intended to provide early notification of the Department's specific plans and actions for this program.

Invitation to Comment

Interested persons are invited to submit comments and recommendations regarding these proposed regulations. All comments submitted in response to these proposed regulations will be available for public inspection, during and after the comment period, in Suite 600B, Portals Building, 1280 Maryland Avenue, S.W., Washington, D.C. between the hours of 8:30 a.m. and 4:00 p.m., Monday through Friday of each week, except Federal holidays.

Assessment of Educational Impact

The Secretary particularly requests comments on whether the proposed regulations in this document would require transmission of information that is being gathered by or is available from any other agency or authority of the United States.

List of Subjects in 34 CFR Part 657

Colleges and universities, Education, International education, Reporting and recordkeeping requirements.

(Catalog of Federal Domestic Assistance Number 84.015)

Dated: March 25, 1996.

David A. Longanecker,

Assistant Secretary for Postsecondary Education.

The Secretary proposes to amend Title 34 of the Code of Federal Regulations by revising Part 657 as follows:

PART 657—FOREIGN LANGUAGE AND AREA STUDIES FELLOWSHIPS PROGRAM

1. The authority citation for Part 657 continues to read as follows:

Authority: 20 U.S.C. 1122, unless otherwise noted.

§ 657.1 [Amended]

2. Section 657.1 is amended by revising the heading by removing the word ''Fellowship'' and adding, in its place, the word ''Fellowships'' and by removing the word ''advanced'' and adding, in its place, ''graduate'' in paragraph (a).

§ 657.2 [Amended]

3. Section 657.2 is amended by removing ''or the Undergraduate International Studies and Foreign Language Program, 34 CFR part 658,'' in paragraph (d).

§ 657.3 [Amended]

4. Section 657.3 is amended by removing paragraph (a)(3), adding the word ''or'' at the end of paragraph (a)(1), and removing the word ''or'' at the end of paragraph (a)(2).

5. Section 657.20 is amended by revising paragraph (b) to read as follows:

§ 657.20 How does the Secretary evaluate an institutional application for an allocation of fellowships?

* * * * *

(b) In general, the Secretary awards up to 140 possible points for these criteria. However, if priority criteria are used, the Secretary awards up to 150 possible points. The maximum possible points for each criterion are shown in parentheses.

6. Section 657.21 is revised to read as follows:

§ 657.21 What criteria does the Secretary use in selecting institutions for an allocation of fellowships?

(a) *Foreign language and area studies fellowships awardee selection procedures.* (15 points) The Secretary reviews each application to determine—

(1) Whether the selection plan is of high quality, showing how awards will be advertised, how students apply, what selection criteria are used, who selects the fellows, when each step will take place, and how the process will result in awards being made to correspond to any announced priorities; and

(2) Whether the applicant provides information about current and prospective applicant/award ratios.

(b) *Quality of staff resources.* (15 points) The Secretary reviews each application to determine—

(1) The extent to which teaching faculty and other staff are qualified for the current and proposed activities and training programs, are provided professional development opportunities (including overseas experience), and participate in teaching, supervising, and advising students (5 points);

(2) The adequacy of applicant staffing and oversight arrangements and the extent to which faculty from a variety of departments, professional schools, and the library are involved (5 points); and

(3) The extent to which the applicant, as part of its nondiscriminatory employment practices, encourages applications for employment from persons who are members of groups that have been traditionally underrepresented, such as members of racial or ethnic minority groups, women, persons with disabilities, and the elderly (5 points).

(c) *Impact and evaluation.* (20 points) The Secretary reviews each application to determine—

(1) The extent to which the applicant's activities and training programs have contributed to an improved supply of specialists on the program's subject as shown through indices such as graduate enrollments and placement data; and the extent to which the applicant supplies a clear description of how the applicant will provide equal access and treatment of eligible project participants who are members of groups that have been traditionally underrepresented, such as members of racial or ethnic minority groups, women, persons with disabilities, and the elderly (15 points); and

(2) The extent to which the applicant provides an evaluation plan that will be comprehensive and objective and that will produce quantifiable, outcome-measure-oriented data; and the extent to which recent evaluations have been used to improve the applicant's program (5 points).

(d) *Commitment to the subject area on which the applicant or program focuses.* (10 points) The Secretary reviews each application to determine—

(1) The extent to which the institution provides financial and other support to the operation of the applicant, teaching staff for the applicant's subject area, library resources, and linkages with institutions abroad (5 points); and

(2) The extent to which the institution provides financial support to graduate students in fields related to the applicant's teaching program (5 points).

(e) *Strength of library.* (15 points) The Secretary reviews each application to determine—

(1) The strength of the institution's library holdings (both print and non-print, English and foreign language) for graduate students; and the extent to which the institution provides financial support for the acquisition of library materials and for library staff in the subject area of the applicant (10 points); and

(2) The extent to which research materials at other institutions are available to students through cooperative arrangements with other libraries or on-line databases (5 points).

(f) *Quality of the applicant's non-language instructional program.* (25 points) The Secretary reviews each application to determine—

(1) The quality and extent of the applicant's course offerings in a variety of disciplines, including the extent to which courses in the applicant's subject matter are available in the institution's professional schools (10 points);

(2) The extent to which the applicant offers depth of specialized course coverage in one or more disciplines on the applicant's subject area (5 points);

(3) The extent to which the institution employs a sufficient number of teaching faculty to enable the applicant to carry out its purposes and the extent to which

teaching assistants are provided with pedagogy training (5 points); and

(4) The extent to which interdisciplinary courses are offered for graduate students (5 points).

(g) *Quality of the applicant's language instructional program.* (20 points) The Secretary reviews each application to determine—

(1) The extent to which the applicant provides instruction in the languages of the applicant's subject area and the extent to which students enroll in those language courses (5 points);

(2) The extent to which the applicant provides three or more levels of language training and the extent to which courses in disciplines other than language, linguistics, and literature are offered in appropriate foreign languages (5 points);

(3) Whether sufficient numbers of language faculty are available to teach the languages and levels of instruction described in the application and the extent to which language teaching staff (including faculty and teaching assistants) have been exposed to current language pedagogy training appropriate for performance-based teaching (5 points); and

(4) The quality of the language program as measured by the performance-based instruction being used or developed, the adequacy of resources for language teaching and practice, and language proficiency requirements (5 points).

(h) *Quality of curriculum design.* (20 points) The Secretary reviews each application to determine—

(1) The extent to which the applicant's curriculum provides training options for graduate students from a variety of disciplines and professional fields and the extent to which these programs and their requirements (including language requirements) are appropriate for an applicant in this subject area and result in graduate training programs of high quality (10 points);

(2) The extent to which the applicant provides academic and career advising services for students (5 points); and

(3) The extent to which the applicant has established formal arrangements for students to conduct research or study abroad and the extent to which these arrangements are used; and the extent to which the institution facilitates student access to other institutions' study abroad and summer language programs (5 points).

(i) *Priorities.* (10 points) If one or more priorities have been established under § 657.22, the Secretary reviews each application for information that shows the extent to which the center or program meets these priorities.

(Authority: 20 U.S.C. 1122)

7. Section 657.31 is amended by revising paragraphs (a)(2) and (b)(1), and adding new paragraph (a)(3) to read as follows:

§ 657.31 What is the amount of a fellowship?

(a) * * *

(2) Each fellowship includes an institutional payment and a subsistence allowance to be determined by the Secretary.

(3) If the institutional payment determined by the Secretary is greater than the tuition and fees charged by the institution, the institutional payment portion of the fellowship is limited to actual tuition and fees. The difference between actual tuition and fees and the Secretary's institutional payment shall be used to fund additional fellowships to the extent that funds are available for a full subsistence allowance.

(4) If permitted by the Secretary, the fellowship may include an allowance for travel and an allowance for dependents.

(b) The Secretary announces in an application notice published in the Federal Register—

(1) The amounts of the subsistence allowance and the institutional payment for an academic year and the subsistence allowance and the institutional payment for a summer session;

* * * * *

8. Section 657.32 is amended by adding a new paragraph (d) to read as follows:

§ 657.32 What is the payment procedure for fellowships?

* * * * *

(d) Funds not used by one recipient for reasons of withdrawal are to be used for alternate recipients to the extent that funds are available for a full subsistence allowance.

9. Section 657.33 is amended by revising paragraph (b) to read as follows:

§ 657.33 What are the limitations on the use of funds for overseas fellowships?

* * * * *

(b) The Secretary may approve the use of a fellowship outside the United States if the student is—

(1) Enrolled in an overseas program approved by the institution at which the student is enrolled in the United States for study at an intermediate or advanced level or at the beginning level if appropriate equivalent instruction is not available in the United States; or

(2) Engaged during the academic year in research that cannot be done effectively in the United States and is affiliated with an institution of higher education or other appropriate organization in the host country.

[FR Doc. 96–7593 Filed 3–27–96; 8:45 am]

BILLING CODE 4000–01–P

Reader Aids

Federal Register

Vol. 61, No. 61

Thursday, March 28, 1996

CUSTOMER SERVICE AND INFORMATION

Federal Register/Code of Federal Regulations

General Information, indexes and other finding aids	**202–523–5227**
Public inspection announcement line	**523–5215**

Laws

Public Laws Update Services (numbers, dates, etc.)	**523–6641**
For additional information	**523–5227**

Presidential Documents

Executive orders and proclamations	**523–5227**
The United States Government Manual	**523–5227**

Other Services

Electronic and on-line services (voice)	**523–4534**
Privacy Act Compilation	**523–3187**
TDD for the hearing impaired	**523–5229**

ELECTRONIC BULLETIN BOARD

Free Electronic Bulletin Board service for Public Law numbers, Federal Register finding aids, and list of documents on public inspection. **202–275–0920**

FAX-ON-DEMAND

You may access our Fax-On-Demand service. You only need a fax machine and there is no charge for the service except for long distance telephone charges the user may incur. The list of documents on public inspection and the daily Federal Register's table of contents are available using this service. The document numbers are 7050-Public Inspection list and 7051-Table of Contents list. The public inspection list will be updated immediately for documents filed on an emergency basis.

NOTE: YOU WILL ONLY GET A LISTING OF DOCUMENTS ON FILE AND NOT THE ACTUAL DOCUMENT. Documents on public inspection may be viewed and copied in our office located at 800 North Capitol Street, N.W., Suite 700. The Fax-On-Demand telephone number is: **301–713–6905**

FEDERAL REGISTER PAGES AND DATES, MARCH

7979–8204 1
8205–8466 4
8467–8850 5
8851–9088 6
9089–9320 7
9321–9588 8
9589–9898 11
9899–10268 12
10269–10446 13
10447–10670 14
10671–10878 15
10879–11124 18
11125–11288 19
11289–11496 20
11497–11708 21
11709–12014 22
12015–13042 25
13043–13382 26
13383–13644 27
13645–14012 28

CFR PARTS AFFECTED DURING MARCH

At the end of each month, the Office of the Federal Register publishes separately a List of CFR Sections Affected (LSA), which lists parts and sections affected by documents published since the revision date of each title.

3 CFR

Proclamations:
6867 8843
6868 8847
6869 8849
6870 9899
6871 10445
6873 13383

Executive Orders:
11776 (Superseded by EO 12994) 13047
12131 (Amended by EO 12991) 9587
12805 (See EO 12993) 13043
12873 (Amended by EO 12995) 13645
12957 (Continued by Notice of March 8, 1996) 9897
12959 (See Notice of March 8, 1996) 9897
12990 8467
12991 9587
12992 11287
12993 13043
12994 13047
12995 13645
12996 13647

Administrative Orders:
Memorandums:
February 29, 1996 9889
Notices:
March 8, 1996 9897
Presidential Determinations:
No. 96–10 of February 23, 1996 8463
No. 96–11 of February 23, 1996 8465
No. 96–12 of February 28, 1996 9887
No. 96–13 of March 1, 1996 9891
No. 96–14 of March 1, 1996 9893
No. 96–17 of March 7, 1996 11123
No. 96–18 of March 8, 1996 11497

4 CFR
28 9089

5 CFR
315 9321
330 11499
333 11499
335 11499
532 10879
1900 13051

7 CFR
1 11501
29 9589
31 9589
32 9589
46 13385
47 11501
51 .....9589, 11125
52 9589
53 9589
54 .....9589, 11504
56 9589
58 9589
70 9589
160 9589
301 .....8205, 13649
319 8205
457 8851
704 10671
916 13386
917 13386
920 13393
925 11127
944 13051
980 13051
982 11289
985 11291
999 13051
1002 11293
1280 13061
1421 11514
1487 8207
1491 8207
1492 8207
1495 8207
1927 11709
2902 9901

Proposed Rules:
29 .....10902, 10903
52 9654
246 10903
457 10699
916 8225
917 8225
920 13463
1005 11756
1006 11756
1007 11756
1011 11756
1012 11756
1013 11756
1046 11756
1131 10288
1205 11764
1230 11776
1240 13463
1427 10289

8 CFR
103 13061
204 13061
205 13061
212 11717
216 13061
242 8858

9 CFR

82 11515
145 11515
147 11515

Proposed Rules:

1 ....9371, 11778
2 11778
3 ....9371, 11778
92 ....9957, 10269
301 9655
304 9655
305 9655
306 9655
307 9655
310 8892
318 ....8892, 9655
319 8892
325 9655
381 ....8892, 9655

10 CFR

2 13655
19 9901
30 9901
51 9901
52 9901
55 9901
100 10269
102 10269
109 10269
110 10269
114 10269
490 10622

Proposed Rules:

430 9958

11 CFR

Proposed Rules:

104 13465

12 CFR

34 11294
265 13395
268 13079
366 9590
614 11303
615 12015
701 11721
748 11526

Proposed Rules:

3 9114
208 9114
225 9114
325 9114
703 8499
711 12043

13 CFR

Ch. III 7979
107 7985
115 7985
120 ....7985, 11471
121 7986
125 7986

14 CFR

11 11278
23 ....10269, 13642
25 ....9533, 11728
27 10436
29 10436
39 ....8209, 8211, 9090, 9092, 9097, 9098, 9371, 9599, 9601, 9604, 9606, 9607, 10270, 10673, 10881, 11130, 11527, 11529, 11533, 11534, 11536, 11538, 11539, 11541, 12015, 12018, 13079, 13081, 13083, 13655
61 11238
67 11238
71 ....8859, 9612, 10271, 10884, 10885, 10886, 12019
91 10269
97 ....10887, 10888, 10889
121 9612
1274 13396

Proposed Rules:

25 11779
39 ....8892, 8896, 8897, 9119, 9959, 9960, 10292, 10294, 10478, 10703, 10907, 11347, 11591, 11593, 11784, 11786, 11789, 11790, 12050, 12051, 13110, 13111, 13113, 13468, 13785, 13787, 13789, 13791
71 ....8899, 9655, 9656, 9657, 9658, 10296, 10908, 10910, 11792, 13115
121 ....9969, 11492
135 11492
243 10706

15 CFR

730 12714
732 12714
734 12714
736 12714
738 12714
740 12714
742 12714
744 12714
746 12714
748 12714
750 12714
752 12714
754 12714
756 12714
758 12714
760 12714
762 12714
764 12714
766 12714
768 12714
770 12714
772 12714
774 12714
768A 12714
769A 12714
770A 12714
771A 12714
772A 12714
773A 12714
774A 12714
775A 12714
776A 12714
777A 12714
778A 12714
779A 12714
785 8471
785A 12714
786A 12714
787A 12714
788A 12714
789A 12714
790A 12714
791A 12714
799A 12714
902 11132

Proposed Rules:

923 9746
926 9746
927 9746
928 9746
932 9746
933 9746

16 CFR

303 11543
460 13659
801 13666
802 13666
1500 13084
1507 13084

Proposed Rules:

21 10708
405 8499

17 CFR

30 10891
200 13689
211 12020
230 13956
239 13956
270 13956
274 13956

Proposed Rules:

210 9848
228 9848
229 9848
230 9848
232 9848
239 9848
240 ....9848, 10271
249 9848
270 13630

18 CFR

2 13419
153 13419
154 9613
157 ....8213, 13419
201 ....8860, 13419
284 ....8860, 8870
375 13419
382 13419

19 CFR

10 7987
113 7987
148 9638

Proposed Rules:

101 8001

20 CFR

368 8213
404 11133
416 ....10274, 11133

21 CFR

5 ....8214, 8472, 9639, 11544
73 7990
101 ....8752, 10280, 11730
123 9100
136 8781
137 8781
139 8781
164 9323
165 13258
172 ....8797, 11545
175 9903
180 7990
310 9570
332 8836
510 8872
520 8872
522 8872
524 8872
573 11546
880 8432
890 8432
1000 13421
1002 13421
1240 9100
1308 13689
1313 13759

Proposed Rules:

2 8002
54 8502
70 8372
73 8372
74 8372
80 8372
81 8372
82 8372
101 ....8372, 8750, 8900, 10480, 11349, 11793, 13117
178 8372
201 8372
312 8502
314 ....8502, 13793
320 8502
330 ....8450, 8502
600 13793
601 ....8502, 13793
701 8372
801 11349
803 11349
804 11349
807 8502
809 10484
812 8502
814 8502
860 8502
864 10484
886 9373
897 11349
1300 8503
1301 8503
1302 8503
1303 8503
1304 ....8503, 11594
1305 8503
1306 8503
1307 8503
1308 8503
1309 8503
1310 8503
1311 8503
1312 8503
1313 8503
1316 8503

22 CFR

2a 10447
40 ....9325, 11305
514 ....8215, 13760

23 CFR

645 12022
1260 11305
1313 9101

Proposed Rules:

1206 11794
1210 9120

24 CFR

5 ....9040, 9536, 11112, 13614
10 13272
20 13280
35 9064
51 13332

92....9036
200....11112, 13614
202....8458
236....13614
243....9536
247....11112, 13614
261....13986
290....11684
570....11474
572....11112
750....11112
760....11112
761....13986
791....10848
812....13614
842....9536
880....9040, 13586
881....9040, 13586
882....9040, 11112, 13614
883....9040, 13586
884....9040, 13586
885....9040, 11948
886....9040, 11112, 11684
887....11112, 13614
889....9040, 11948
890....11948
891....11948
904....9040, 13614
912....13614
913....11112
941....8712
942....9536
950....8712, 11112
955....9052
960....9040, 11112, 13614
961....13986
962....8814
965....8712
966....13272
968....8712
982....9040, 11112, 13614
983....9040, 11112
984....8814
1700....13596
1710....13596
1715....13596
1720....10440
3282....10440, 10858
3283....10858
3500....10440, 13232
3800....10440

Proposed Rules:

250....8901
251....8901
256....8901

25 CFR

11....10673

26 CFR

1....7991, 9326, 10447, 11307, 11547, 11548, 11550, 12135, 13762
20....7991
25....7991
31....9639, 11307, 11548, 12135
35a....11307
40....10450
42....10450
48....10450
301....13762
602....9336, 10450, 11550, 12135

Proposed Rules:

1....9377, 9659, 9660, 10489, 11083, 11595
31....11595
48....10490, 10492
301....9660, 10492
602....10492

28 CFR

2....13763
50....13763
52....8472
549....13322
551....11274

29 CFR

102....13764
1901....9228
1902....9228
1910....9228
1915....9228
1926....9228
1928....9228
1950....9228
1951....9228
2615....13117
2619....10674
2676....10674

Proposed Rules:

102....11167
103....10709
500....10911
Ch. XIV....13794
1910....9381
1915....9381
1926....9381

30 CFR

75....9764
260....12022
920....12027

Proposed Rules:

48....11350
250....8534, 8901
251....8901
256....8901
906....8534
931....13117
936....8536
938....10918
944....11350
946....10919

31 CFR

500....9343
535....8216
601....10895

Proposed Rules:

357....8420

32 CFR

Ch. XX....10854
23....9344
216....0346
706....9104, 9105, 9107, 9904
2001....10854

Proposed Rules:

324....8003

33 CFR

Subchapter D....10466
4....9264
81....10466
100....8216, 8217, 8218, 10896
117....10466, 13098
130....9264
131....9264
132....9264
137....9264
138....9264
154....13098
155....13098
165....8219, 8220, 9348, 13100
175....13924
179....13924
181....13924

Proposed Rules:

62....13470
66....13470
67....13472
100....8227, 8229, 11352, 11353, 11354, 11796, 13119, 13120, 13122
110....11356
165....10493
183....13123

34 CFR

75....8454
345....8158

Proposed Rules:

99....10664
299....13324
656....13996
657....14006

36 CFR

Ch. IX....11308

38 CFR

0....11308
1....11309
3....11309, 11731, 13424
21....11310

39 CFR

20....13765, 13775
111....10068

40 CFR

9....11096
22....11090
51....9905
52....7992, 7995, 8873, 9350, 9639, 9642, 9644, 9905, 11136, 11137, 11139, 11142, 11149, 11153, 11162, 11550, 11552, 11556, 11560, 11731, 11735, 12030, 13101, 13776
60....9905
70....8875, 11738, 13101
80....8221, 12030
81....11560
82....10676
112....9646
114....9646
117....9646
152....8876
167....8221
180....9355, 10280, 10282, 10678, 10681, 11311, 11313, 13424, 13427, 13428
185....9357, 11994
261....13103
271....9108, 10684, 13777
300....7996, 10687
418....10468
761....11096
799....11740

Proposed Rules:

52....8008, 8009, 8901, 9125, 9639, 9642, 9644, 10920, 10962, 10968, 11167, 11168, 11169, 11170, 11596, 11597, 11798
63....9383, 9532, 13125
70....9125, 9661
82....9014
89....9131, 12053
90....9131, 12053
91....9131, 12053
122....8229
123....8229
148....12054
180....8174, 8901, 8903, 9399, 10297, 11357, 11359, 13474, 13476
185....11359
186....11359
220....13794
227....13794
261....12054, 13129
264....9532
265....9532
266....9532
268....12054
271....12054
300....8012, 9403, 10298, 11597, 13131, 13794
403....8229
501....8229
745....9064

41 CFR

101–71....9110
301....10252

Proposed Rules:

60–741....9532

42 CFR

57....9532
58....9532
417....13430
434....13430
1003....13430

Proposed Rules:

440....9405

43 CFR

10001....13450

Proposed Rules:

Ch. II....8537
14....8538

44 CFR

10....10688
61....8222
64....7997, 8474
65....10468, 10472, 11315, 11317
67....10474, 11318

Proposed Rules:

67....10494, 11362

45 CFR

74....11743
801....11747
1611....12041

Proposed Rules:

74....
78....
101....

46 CFR

2....13924
12....13098
13....13098

15 13098
30 13098
31 13098
35 13098
78 13098
90 13098
97 13098
98 13098
105 13098
151 13098
153 13098
154 13098
159 13924
160 ....13924, 13931
572 11564
Proposed Rules:
10 13284
12 13284
14 13796
15 13284
108 8539
110 8539
111 8539
112 8539
113 8539
161 8539
381 9670
501 9944

47 CFR

Ch. I 11163
0 ....8475, 10688
1 11748
2 8475
5 ....8475, 10896
21 8475
22 8475
23 8475
25 ....8475, 9944, 9946,10896
61 8879
63 10475
64 8879
73 ....7999, 8000, 8475, 8880, 8881, 9359, 9360, 9648, 10284, 10689, 10691, 11320, 11584, 11585
76 ....9361, 9648, 11749
78 8475
80 8475
90 ....8475, 8478
94 8475
95 8475
97 9953
Proposed Rules:
Ch. I 9963, 10496, 11172, 11173
1 9964
2 8905
5 ....10709, 10709
20 13133
21 10709
22 10709
23 10709
24 ....10709, 13133
25 ....8905, 10709, 10710
26 10709
36 10499
43 10522
61 11174
63 10522
64 ....9966, 10522, 11174
65 9968
69 ....10499, 11174
73 ....8014, 8230, 9410, 9411, 9964, 10300, 10301, 10709, 10876, 10977, 10978
74 10709
76 ....9411, 9671, 13803
78 10709
80 10709
87 ....8905, 10709
90 10709
94 10709
95 10709
97 10709

48 CFR

206 10285
213 9532
225 ....10899, 13106
252 ....10899, 13106
510 10846
515 10846
538 10846
552 10846
801 11585
814 11585
833 11585
836 11585
852 11585

49 CFR

199 10477
382 9546
383 9546
390 9546
391 ....9546, 13338
392 9546
571 ....9953, 11587, 13108
671 9650
1201 9112
1262 9112
Proposed Rules:
Ch. X 9413, 10526
40 ....9969, 13809
171 ....8328, 11484
173 ....8328, 11484
178 8328
180 11484
191 9132
192 ....8231, 9132
193 8231
195 ....8231, 9415, 13144
199 9969
214 10528
219 9969
229 8881
382 ....9969, 10548
383 10548
390 10548
391 10548
571 ....9135, 10556, 10979
572 9135
653 9969
654 9969
1000 11799
1001 11799
1002 ....11799, 11802
1003 11799
1004 11799
1005 11799
1006 11799
1007 11799
1008 11799
1009 11799
1010 11799
1011 11799
1012 11799
1013 11799
1014 11799
1015 11799
1016 11799
1017 11799
1018 11799
1019 11799
1020 11799
1021 11799
1022 11799
1023 11799
1024 11799
1025 11799
1026 11799
1027 11799
1028 11799
1029 11799
1030 11799
1031 11799
1032 11799
1033 11799
1034 11799
1035 11799
1036 11799
1037 11799
1038 11799
1039 ....11799, 13146
1040 11799
1041 11799
1042 11799
1043 11799
1044 11799
1045 11799
1046 11799
1047 11799
1048 11799
1049 11799
1050 11799
1051 11799
1052 11799
1053 11799
1054 11799
1055 11799
1056 11799
1057 11799
1058 11799
1059 11799
1060 11799
1061 11799
1062 11799
1063 11799
1064 11799
1065 11799
1066 11799
1067 11799
1068 11799
1069 11799
1070 11799
1071 11799
1072 11799
1073 11799
1074 11799
1075 11799
1076 11799
1077 11799
1078 11799
1079 11799
1080 11799
1081 11799
1082 11799
1083 11799
1084 11799
1085 11799
1086 11799
1087 11799
1088 11799
1089 11799
1090 11799
1091 11799
1092 11799
1093 11799
1094 11799
1095 11799
1096 11799
1097 11799
1098 11799
1099 11799
1100 11799
1101 11799
1102 11799
1103 11799
1104 11799
1105 ....11174, 11799
1106 11799
1107 11799
1108 11799
1109 11799
1110 11799
1111 11799
1112 11799
1113 11799
1114 11799
1115 11799
1116 11799
1117 11799
1118 11799
1119 11799
1120 11799
1121 ....11799, 11804
1122 11799
1123 11799
1124 11799
1125 11799
1126 11799
1127 11799
1128 11799
1129 11799
1130 11799
1131 11799
1132 11799
1133 11799
1134 11799
1135 11799
1136 11799
1137 11799
1138 11799
1139 11799
1140 11799
1141 11799
1142 11799
1143 11799
1144 11799
1145 11799
1146 11799
1147 11799
1148 11799
1149 11799
1150 11802
1152 ....11174, 11375
1201 ....9138, 11375
1262 9138
1312 9419
1313 13147

50 CFR

17 ....9651, 10693, 11320
215 11750
216 11750
227 10477
260 9368
261 9368
262 9368
263 9368
264 9368
265 9368
266 9368

267.....9368
285.....8223, 11337
290.....8224
300.....11751
301.....11337
351.....9369
380.....8483
611.....9955
620.....11164
625 .....10285, 10286, 11344, 13452
642.....11345
649.....13454
650.....8490
651.....8492
655.....8496
661.....8497
672 ...8888, 9955, 9956, 10286, 10901, 11589, 11590, 13462
675 .....8497, 9498, 8888, 8889, 9113, 9370, 10287, 10697, 11165, 11345, 12041, 13109
676.....9955
677.....13782
683.....8890

Proposed Rules:

10.....11180
14.....11180
15.....11180
16.....11180
17 .....8014, 8016, 8018, 11180,11181
18.....11180
20.....11805, 11986
23.....8019, 11180
91.....10557
260.....9420
611.....10712
620.....10712
628.....13810
640.....12055
642.....10302
649.....13478
651.....8540
654.....12056
656.....13811
659.....11181
662.....13148
663.....8021, 10303
672.....9972, 11375
674.....13149
675.....8023
676.....11376
686.....8564
697.....13811

REMINDERS

The rules and proposed rules in this list were editorially compiled as an aid to Federal Register users. Inclusion or exclusion from this list has no legal significance.

RULES GOING INTO EFFECT TODAY

ENVIRONMENTAL PROTECTION AGENCY

Air quality implementation plans; approval and promulgation; various States:
Missouri; published 3-28-96

INTERIOR DEPARTMENT

Land Management Bureau

Public land orders:
Idaho; published 2-27-96
Idaho; correction; published 2-27-96

JUSTICE DEPARTMENT

Drug Enforcement Administration

Chemical exports from U.S. to Colombia; policy statement; published 3-28-96

Schedules of controlled substances:
Exempt chemical preparations; published 3-28-96

JUSTICE DEPARTMENT

Antitrust Procedures and Penalties Act:
Procedures for receipt and consideration of written comments; CFR section removed; published 3-28-96

NATIONAL AERONAUTICS AND SPACE ADMINISTRATION

Civil Space Employee Testing Act of 1991; implementation:
Alcohol and drug testing programs; published 2-27-96

POSTAL SERVICE

International Mail Manual:
International package consignment service implementation; published 3-28-96

UNITED STATES INFORMATION AGENCY

Exchange visitor program:
Summer travel programs; published 3-28-96

COMMENTS DUE NEXT WEEK

AGRICULTURE DEPARTMENT

Agricultural Marketing Service

Cotton:
Classification services to growers; user fees; comments due by 4-1-96; published 2-29-96

Nectarines and peaches grown in California; comments due by 4-3-96; published 3-4-96

AGRICULTURE DEPARTMENT

Farm Service Agency

Program regulations:
Business and industrial loan program; comments due by 4-2-96; published 2-2-96

AGRICULTURE DEPARTMENT

Grain Inspection, Packers and Stockyards Administration

Agricultural commodities standards:
Beans, whole dry peas, split peas, and lentils; grade standards removed from CFR; comments due by 4-1-96; published 2-29-96

AGRICULTURE DEPARTMENT

Rural Business-Cooperative Service

Program regulations:
Business and industrial loan program; comments due by 4-2-96; published 2-2-96

AGRICULTURE DEPARTMENT

Rural Housing Service

Program regulations:
Business and industrial loan program; comments due by 4-2-96; published 2-2-96

AGRICULTURE DEPARTMENT

Rural Utilities Service

Program regulations:
Business and industrial loan program; comments due by 4-2-96; published 2-2-96

COMMERCE DEPARTMENT

National Oceanic and Atmospheric Administration

Meetings:
Mid-Atlantic Fishery Management Council; comments due by 4-2-96; published 2-22-96

DEFENSE DEPARTMENT

Acquisition regulations:
Miller Act bond requirements; alternatives; comments due by 4-1-96; published 2-1-96

ENERGY DEPARTMENT

Debarment and suspension (procurement) and governmentwide debarment and suspension (nonprocurement); drug-free workplace requirements; comments due by 4-2-96; published 2-2-96

National Environmental Policy Act; implementation; comments due by 4-5-96; published 2-20-96

ENVIRONMENTAL PROTECTION AGENCY

Air pollutants, hazardous; national emission standards:
Synthetic organic chemical manufacturing industry and other processes subject to equipment leaks negotiated regulation; comments due by 4-1-96; published 2-29-96

Air programs:
Stratospheric ozone protection--
Motor vehicle air conditioners servicing; comments due by 4-5-96; published 3-6-96
Refrigerant recycling; comments due by 4-1-96; published 2-29-96
Refrigerant recycling; comments due by 4-1-96; published 2-29-96
Refrigerant recycling; comments due by 4-1-96; published 2-29-96

Air quality implementation plans; approval and promulgation; various States:
California; comments due by 4-1-96; published 3-1-96
Kentucky; comments due by 4-5-96; published 3-6-96
Maryland; comments due by 4-1-96; published 3-1-96
Michigan; comments due by 4-1-96; published 3-1-96
Missouri; comments due by 4-1-96; published 2-29-96
Oklahoma; comments due by 4-1-96; published 2-29-96

Hazardous waste program authorizations:
Washington; comments due by 4-1-96; published 2-29-96

Pesticides; tolerances in food, animal feeds, and raw agricultural commodities:
Prosulfuron; comments due by 4-5-96; published 3-6-96
Sethoxydim; comments due by 4-1-96; published 2-29-96

Superfund program:
National oil and hazardous substances contingency plan--
National priorities list update; comments due by 4-1-96; published 3-1-96

Water pollution control:
Clean Water Act--
Pollutant analysis; test procedures guidelines; comments due by 4-2-96; published 1-26-96
Ocean dumping; bioassay testing requirements; comments due by 4-1-96; published 2-29-96

FEDERAL COMMUNICATIONS COMMISSION

Common carrier services:
Open video systems; implementation; comments due by 4-1-96; published 3-14-96
Satellite communications--
Fixed-satellite service in 13.75-14.0 GHz band; comments due by 4-1-96; published 3-6-96
Telecommunications Act; implementation--
Equipment standards; dispute resolution; comments due by 4-1-96; published 3-12-96

Radio broadcasting:
Arecibo Coordination Zone, PR; designation; comments due by 4-1-96; published 3-15-96

Radio stations; table of assignments:
California; comments due by 4-5-96; published 2-20-96
Delaware; comments due by 4-5-96; published 2-20-96
New York et al.; comments due by 4-5-96; published 2-20-96
Oregon; comments due by 4-5-96; published 2-20-96
Texas; comments due by 4-5-96; published 2-20-96

FEDERAL RESERVE SYSTEM

Truth in lending (Regulation Z):
Consumer protection; adequacy determination; comments due by 4-1-96; published 1-30-96

FEDERAL TRADE COMMISSION

Trade regulation rules:
Waist belts, leather content; misbranding and deception; comments due by 4-4-96; published 3-5-96

HEALTH AND HUMAN SERVICES DEPARTMENT

Food and Drug Administration

Chlorofluorocarbon propellants in self-pressurized containers:

Sterile aerosol talc; addition to list of essential uses; comments due by 4-1-96; published 3-1-96

Food additives:

Folic acid (Folacin); comments due by 4-4-96; published 3-5-96

Food for human consumption:

Food additives--

Sucrose esterified with medium and long chain fatty acids (olestra); comments due by 4-1-96; published 3-21-96

Food labeling--

Folate and neural tube defects; health claims and label statements; comments due by 4-4-96; published 3-5-96

Health claims, oats and coronary heart disease; comments due by 4-3-96; published 1-4-96

INTERIOR DEPARTMENT

Fish and Wildlife Service

Endangered and threatened species:

California condors, captive-reared; comments due by 4-1-96; published 2-29-96

INTERIOR DEPARTMENT

Minerals Management Service

Rulemaking petitions:

Outer Continental Shelf; claimed aboriginal title and aboriginal hunting and fishing rights of federally recognized tribes in Alaska; comments due by 4-4-96; published 3-5-96

INTERIOR DEPARTMENT

National Park Service

Special regulations:

Voyageurs National Park, MN; aircraft operations; areas designation; comments due by 4-1-96; published 1-31-96

INTERIOR DEPARTMENT

Surface Mining Reclamation and Enforcement Office

Permanent program and abandoned mine land reclamation plan submissions:

Oklahoma; comments due by 4-4-96; published 3-5-96

INTERNATIONAL DEVELOPMENT COOPERATION AGENCY

Agency for International Development

Commodities and services financed by AID; source, origin and nationality rules; comments due by 4-5-96; published 2-5-96

LABOR DEPARTMENT

Occupational Safety and Health Administration

Construction safety and health standards:

Powered industrial truck operator training; comments due by 4-1-96; published 1-30-96

Occupational safety and health standards, etc.:

Powered industrial truck operator training; comments due by 4-1-96; published 1-30-96

NATIONAL CREDIT UNION ADMINISTRATION

Credit unions:

Community development revolving loan program; comments due by 4-5-96; published 2-5-96

Insurance requirements--

Financial and statistical reports; directly assess federally-insured credit unions for cost of repeated inaccurate or late filings; comments due by 4-5-96; published 2-5-96

Organization and operations--

Secondary capital from foundations and other philanthropic-minded institutional investors; comments due by 4-1-96; published 2-2-96

PANAMA CANAL COMMISSION

Acquisition regulations:

Debarment, suspension and ineligibility; comments due by 4-2-96; published 2-2-96

PERSONNEL MANAGEMENT OFFICE

Pay under General Schedule:

Locality-based comparability payments--

Interim geographic adjustments; termination; comments due by 4-1-96; published 2-1-96

RAILROAD RETIREMENT BOARD

Cigarettes; prohibition of sale to minors; comments due by 4-3-96; published 3-4-96

TRANSPORTATION DEPARTMENT

Coast Guard

Federal regulatory review:

Electrical engineering requirements for merchant vessels; comments due by 4-2-96; published 2-26-96

Ports and waterways safety:

Elizabeth River and York River, VA; safety zone; comments due by 4-3-96; published 3-14-96

TRANSPORTATION DEPARTMENT

Federal Aviation Administration

Airworthiness directives:

Boeing; comments due by 4-1-96; published 2-1-96

McDonnell Douglas; comments due by 4-1-96; published 2-21-96

Airworthiness standards:

Normal, utility, acrobatic, and commuter category airplanes--

Powerplant and equipment standards; comments due by 4-3-96; published 1-4-96

TRANSPORTATION DEPARTMENT

Federal Highway Administration

Engineering and traffic operations:

Federal-aid project agreement; contract procedures; comments due by 4-1-96; published 1-30-96

TRANSPORTATION DEPARTMENT

Federal Transit Administration

Capital leases; comments due by 4-1-96; published 1-31-96

TRANSPORTATION DEPARTMENT

National Highway Traffic Safety Administration

Motor vehicle safety standards, etc.:

Small volume manufacturers; regulatory problems; meeting; comments due by 4-4-96; published 2-5-96

TRANSPORTATION DEPARTMENT

Research and Special Programs Administration

Pipeline safety:

Voluntary specifications and standards, etc.; periodic updates; Federal regulatory review; comments due by 4-3-96; published 3-4-96

TREASURY DEPARTMENT

Customs Service

North American Free Trade Agreement (NAFTA):

Duty deferral programs; collection and waiver or reduction of duty; comments due by 4-1-96; published 1-30-96

TREASURY DEPARTMENT

Internal Revenue Service

Income taxes:

Individual returns; filing extension; cross reference and hearing; comments due by 4-1-96; published 1-4-96

LIST OF PUBLIC LAWS

This is a list of public bills from the 104th Congress which have become Federal laws. It may be used in conjunction with ''P L U S'' (Public Laws Update Service) on 202–523–6641. The text of laws is not published in the **Federal Register** but may be ordered in individual pamphlet form (referred to as ''slip laws'') from the Superintendent of Documents, U.S. Government Printing Office, Washington, DC 20402 (phone, 202–512–2470).

H.R. 2036/P.L. 104–119

Land Disposal Program Flexibility Act of 1996 (Mar. 26, 1996; 110 Stat. 830)

Last List March 26, 1996