5–31–96
Vol. 61 No. 106
Pages 27243–27766

federal register

Friday
May 31, 1996

Briefings on How To Use the Federal Register
For information on briefings in Chicago, IL, and Washington, DC, see announcement on the inside cover of this issue.

FEDERAL REGISTER Published daily, Monday through Friday, (not published on Saturdays, Sundays, or on official holidays), by the Office of the Federal Register, National Archives and Records Administration, Washington, DC 20408, under the Federal Register Act (49 Stat. 500, as amended; 44 U.S.C. Ch. 15) and the regulations of the Administrative Committee of the Federal Register (1 CFR Ch. I). Distribution is made only by the Superintendent of Documents, U.S. Government Printing Office, Washington, DC 20402.

The Federal Register provides a uniform system for making available to the public regulations and legal notices issued by Federal agencies. These include Presidential proclamations and Executive Orders and Federal agency documents having general applicability and legal effect, documents required to be published by act of Congress and other Federal agency documents of public interest. Documents are on file for public inspection in the Office of the Federal Register the day before they are published, unless earlier filing is requested by the issuing agency.

The seal of the National Archives and Records Administration authenticates this issue of the Federal Register as the official serial publication established under the Federal Register Act. 44 U.S.C. 1507 provides that the contents of the Federal Register shall be judicially noticed.

The Federal Register is published in paper, 24x microfiche and as an online database through *GPO Access*, a service of the U.S. Government Printing Office. The online database is updated by 6 a.m. each day the Federal Register is published. The database includes both text and graphics from Volume 59, Number 1 (January 2, 1994) forward. Free public access is available on a Wide Area Information Server (WAIS) through the Internet and via asynchronous dial-in. Internet users can access the database by using the World Wide Web; the Superintendent of Documents home page address is http://www.access.gpo.gov/su__docs/, by using local WAIS client software, or by telnet to swais.access.gpo.gov, then login as guest, (no password required). Dial-in users should use communications software and modem to call (202) 512–1661; type swais, then login as guest (no password required). For general information about *GPO Access*, contact the *GPO Access* User Support Team by sending Internet e-mail to gpoaccess@gpo.gov; by faxing to (202) 512–1262; or by calling (202) 512–1530 between 7 a.m. and 5 p.m. Eastern time, Monday–Friday, except for Federal holidays.

The annual subscription price for the Federal Register paper edition is $494, or $544 for a combined Federal Register, Federal Register Index and List of CFR Sections Affected (LSA) subscription; the microfiche edition of the Federal Register including the Federal Register Index and LSA is $433. Six month subscriptions are available for one-half the annual rate. The charge for individual copies in paper form is $8.00 for each issue, or $8.00 for each group of pages as actually bound; or $1.50 for each issue in microfiche form. All prices include regular domestic postage and handling. International customers please add 25% for foreign handling. Remit check or money order, made payable to the Superintendent of Documents, or charge to your GPO Deposit Account, VISA or MasterCard. Mail to: New Orders, Superintendent of Documents, P.O. Box 371954, Pittsburgh, PA 15250–7954.

There are no restrictions on the republication of material appearing in the Federal Register.

How To Cite This Publication: Use the volume number and the page number. Example: 61 FR 12345.

SUBSCRIPTIONS AND COPIES

PUBLIC	
Subscriptions:	
Paper or fiche	202–512–1800
Assistance with public subscriptions	512–1806
General online information	202–512–1530
Single copies/back copies:	
Paper or fiche	512–1800
Assistance with public single copies	512–1803
FEDERAL AGENCIES	
Subscriptions:	
Paper or fiche	523–5243
Assistance with Federal agency subscriptions	523–5243

For other telephone numbers, see the Reader Aids section at the end of this issue.

FEDERAL REGISTER WORKSHOP

THE FEDERAL REGISTER: WHAT IT IS AND HOW TO USE IT

FOR: Any person who uses the Federal Register and Code of Federal Regulations.

WHO: Sponsored by the Office of the Federal Register.

WHAT: Free public briefings (approximately 3 hours) to present:

1. The regulatory process, with a focus on the Federal Register system and the public's role in the development of regulations.
2. The relationship between the Federal Register and Code of Federal Regulations.
3. The important elements of typical Federal Register documents.
4. An introduction to the finding aids of the FR/CFR system.

WHY: To provide the public with access to information necessary to research Federal agency regulations which directly affect them. There will be no discussion of specific agency regulations.

CHICAGO, IL

WHEN: June 11, 1996 at 9:00 am

WHERE: Metcalfe Federal Building, Conference Room 328, 77 West Jackson, Chicago, Illinois 60604

RESERVATIONS: 1–800–688–9889

WASHINGTON, DC

[Two Sessions]

WHEN: June 18, 1996 at 9:00 am, and June 25, 1996 at 9:00 am

WHERE: Office of the Federal Register Conference Room, 800 North Capitol Street, NW., Washington, DC (3 blocks north of Union Station Metro)

RESERVATIONS: 202–523–4538

Printed on recycled paper containing 100% post consumer waste

Contents

Federal Register
Vol. 61, No. 106
Friday, May 31, 1996

Agricultural Marketing Service
RULES
Grapes grown in California, 27245–27247
Onions grown in—
Idaho and Oregon, 27250–27251
Potatoes (Irish) grown in—
Oregon and California, 27247–27248
Southeastern States, 27248–27250

Agriculture Department
See Agricultural Marketing Service
See Cooperative State Research, Education, and Extension Service
See Federal Crop Insurance Corporation
See Forest Service
See Rural Utilities Service
NOTICES
Import quotas and fees:
Upland cotton, 27330–27333

Alcohol, Tobacco and Firearms Bureau
NOTICES
Agency information collection activities:
Proposed collection; comment request, 27384

Blind or Severely Disabled, Committee for Purchase From People Who Are
See Committee for Purchase From People Who Are Blind or Severely Disabled

Census Bureau
NOTICES
Agency information collection activities:
Proposed collection; comment request, 27335

Centers for Disease Control and Prevention
NOTICES
Grants and cooperative agreements; availability, etc.:
Construction industry; occupational safety and health; intervention projects, 27354–27356
Tuberculin skin testing demonstration projects; and tuberculosis patients counseling and testing for HIV infection and test results reporting, 27356–27360

Civil Rights Commission
NOTICES
Meetings; State advisory committees:
Georgia, 27334

Commerce Department
See Census Bureau
See Export Administration Bureau
See Minority Business Development Agency
See National Oceanic and Atmospheric Administration
NOTICES
Agency information collection activities:
Submission for OMB review; comment request, 27334–27335

Committee for Purchase From People Who Are Blind or Severely Disabled
NOTICES
Procurement list; additions and deletions, 27338–27340

Cooperative State Research, Education, and Extension Service
RULES
Grants:
Rangeland research program; administrative provisions, 27752–27759

Copyright Office, Library of Congress
PROPOSED RULES
Cable compulsory license:
Open video systems of telephone companies; eligibility and comment period extended, 27322

Drug Enforcement Administration
NOTICES
Applications, hearings, determinations, etc.:
Maxicare Pharmacy, 27368–27370

Education Department
NOTICES
Grants and cooperative agreements; availability, etc.:
National Institute on Disability and Rehabilitation Research—
Research and demonstration projects program, 27340–27341
Postsecondary education:
Federal Pell grant, Perkins loan, work-study, supplemental educational opportunity grant, family education loan, and William D. Ford direct loan programs—
Need analysis methodology for 1997-1998 award year; tables update, 27762–27765

Employment Standards Administration
NOTICES
Minimum wages for Federal and federally-assisted construction; general wage determination decisions, 27370–27371

Energy Department
See Federal Energy Regulatory Commission
NOTICES
Meetings:
National Petroleum Council, 27341

Environmental Protection Agency
NOTICES
Environmental statements; availability, etc.:
Agency statements—
Comment availability, 27346–27347
Weekly receipts, 27347
Meetings:
Small Town Environmental Planning Task Force, 27347
Pesticide, food, and feed additive petitions:
Asgrow Seed Co., 27348
Reporting and recordkeeping requirements, 27348–27349
Superfund program:
Soil screening guidance; availability, 27349–27351

Export Administration Bureau
RULES
Alaskan North Slope crude oil exports; establishment of license exception TAPS, 27255–27258

Federal Aviation Administration
RULES
Airworthiness directives:
McDonnell Douglas, 27251–27252
SAAB, 27253–27255
PROPOSED RULES
Airworthiness directives:
Airbus, 27322

Federal Communications Commission
PROPOSED RULES
Common carrier services:
Federal-State Joint Board on Universal Service; establishment, 27323
NOTICES
Agency information collection activities:
Submission for OMB review; comment request, 27351–27352

Federal Crop Insurance Corporation
RULES
Crop insurance regulations:
Malting barley option crop insurance provisions Correction, 27244–27245
PROPOSED RULES
Crop insurance regulations:
Sugar beets, 27315–27321

Federal Energy Regulatory Commission
NOTICES
Environmental statements; availability, etc.:
N.E.W. Hydro, Inc., 27345
Pacific Gas & Electric Co., 27345–27346
Upper Peninsula Power Co., 27346
Applications, hearings, determinations, etc.:
Burney Forest Products, 27341
Duke/Louis Dreyfus Energy Services (New England) L.L.C., 27341
Equitrans, L.P., et al., 27341–27342
Great Lakes Gas Transmission L.P., 27342
Gulf States Pipeline Corp., 27342–27343
Kansas City Power & Light Co., 27343
Koch Gateway Pipeline Co., 27343
National Fuel Gas Supply Corp., 27343–27344
Northern Natural Gas Co., 27344
Old Dominion Electric Cooperative, 27344
Panhandle Eastern Pipe Line Co., 27344
SCANA Energy Marketing, Inc., 27344–27345
Williams Natural Gas Co., 27345

Federal Reserve System
NOTICES
Banks and bank holding companies:
Change in bank control, 27352
Formations, acquisitions, and mergers, 27352
Permissible nonbanking activities, 27352–27353
Meetings; Sunshine Act, 27353–27354

Fish and Wildlife Service
NOTICES
Environmental statements; availability, etc.:
Incidental take permits—
Orange County, CA; coastal California gnatcatcher, etc., 27363–27365

Food and Drug Administration
NOTICES
Medical devices:
User facility and distributor reporting; guidance documents; availability, 27360–27361
Reports; availability, etc.:
Medical Device Reporting for Manufacturers, 27361–27362

Forest Service
NOTICES
Appealable decisions; legal notice:
Northern region, 27333

Health and Human Services Department
See Centers for Disease Control and Prevention
See Food and Drug Administration
See Health Care Financing Administration
See National Institutes of Health

Health Care Financing Administration
RULES
Medicare:
Health maintenance organizations; employer contribution to HMOs, 27282–27288
PROPOSED RULES
Medicare:
Hospital inpatient prospective payment systems and FY 1997 rates, 27444–27708

Housing and Urban Development Department
NOTICES
Grants and cooperative agreements; availability, etc.:
Facilities to assist homeless—
Excess and surplus Federal property, 27363

Interior Department
See Fish and Wildlife Service
See Land Management Bureau
See Minerals Management Service

Internal Revenue Service
RULES
Income taxes:
Enterprise zone facility bonds, 27258–27263
NOTICES
Agency information collection activities:
Proposed collection; comment request, 27384–27385

Justice Department
See Drug Enforcement Administration
NOTICES
Pollution control; consent judgments:
Allied Signal, Inc., et al., 27367–27368

Labor Department
See Employment Standards Administration

Land Management Bureau
NOTICES
Withdrawal and reservation of lands:
Idaho, 27365–27366
Montana, 27366
Wyoming, 27367

Library of Congress
See Copyright Office, Library of Congress

Minerals Management Service
RULES
Royalty management:
Royalty relief for producing leases and existing leases in deep water, 27263–27280

Minority Business Development Agency
NOTICES
Community-based organizations applying to operate minority business development centers in designated locations; cost-share requirements, etc.; policy, 27336–27337

National Highway Traffic Safety Administration
RULES
Motor vehicle safety standards:
Air brake systems—
Federal regulatory reform, 27288–27304
PROPOSED RULES
Motor vehicle safety standards:
Door locks and door retention components; rulemaking petition, 27325–27329

National Institutes of Health
NOTICES
Meetings:
Mental Health Special Emphasis Panel, 27362–27363

National Oceanic and Atmospheric Administration
RULES
Fishery conservation and management:
Atlantic swordfish, 27304–27308
Gulf of Alaska and Bering Sea and Aleutian Islands groundfish, 27253, 27312–27314
Gulf of Alaska groundfish, 27308–27312
Northeast multispecies, 27710–27750
NOTICES
Meetings:
North Pacific Fishery Management Council, 27337
National Weather Service; modernization and restructuring:
National Environmental Satellite, Data, and Information Service transition from GOES-Tap/GOES-Fax transmission of satellite imagery to alternative methods, 27337
Permits:
Marine mammals, 27337–27338

Nuclear Regulatory Commission
NOTICES
Applications, hearings, determinations, etc.:
Baltimore Gas & Electric Co., 27371–27373
Bemis Construction, Inc., 27373–27374

Personnel Management Office
RULES
Allowances and differentials:
Separate maintenance allowance for Johnston Island duty, 27243–27244
Prevailing rate systems, 27243
NOTICES
Agency information collection activities:
Submission for OMB review; comment request, 27374–27375

Public Health Service
See Centers for Disease Control and Prevention
See Food and Drug Administration
See National Institutes of Health

Research and Special Programs Administration
PROPOSED RULES
Pipeline safety:
Hazardous liquid transportation—
Areas unusually sensitive to environmental damage; workshop, 27323–27325

Rural Utilities Service
NOTICES
Environmental statements; availability, etc.:
LaGrange County, IN, Sewer District, 27333–27334

Secret Service
RULES
Counterfeit Deterrence Act:
Color illustrations of U.S. currency, 27280–27281

Securities and Exchange Commission
NOTICES
Self-regulatory organizations; proposed rule changes:
Philadelphia Depository Trust Co., 27377–27379
Stock Clearing Corp. of Philadelphia, 27379–27380
Applications, hearings, determinations, etc.:
Bankers Trust Australia Ltd., 27375–27377

Social Security Administration
NOTICES
Agency information collection activities:
Proposed collection; comment request, 27380–27382

State Department
NOTICES
Meetings:
Overseas Security Advisory Council, 27382

Surface Transportation Board
NOTICES
Railroad operation, acquisition, construction, etc.:
Great Western Lines, LLC, 27382–27383
Great Western Railway of Colorado, LLC, 27383
Neptune Partners, Ltd., 27383
Union Pacific Railroad Co., 27383–27384

Transportation Department
See Federal Aviation Administration
See National Highway Traffic Safety Administration
See Research and Special Programs Administration
See Surface Transportation Board

Treasury Department
See Alcohol, Tobacco and Firearms Bureau
See Internal Revenue Service
See Secret Service

Utah Reclamation Mitigation and Conservation Commission
NOTICES
Environmental statements; availability, etc.:
Utah Lake Wetland Preserve, 27385

Veterans Affairs Department
RULES
National cemeteries; miscellaneous amendments, 27281–27282
VA publications; use of words and statements denoting gender; removal, 27282

NOTICES
Agency information collection activities:
Proposed collection; comment request, 27385–27388

Separate Parts In This Issue

Part II
Department of Health and Human Services, Health Care Financing Administration, 27444–27708

Part III
Department of Commerce, National Oceanic and Atmospheric Administration, 27710–27750

Part IV
Department of Agriculture, Cooperative State Research, Education, and Extension Service, 27752–27759

Part V
Department of Education, 27762–27765

Reader Aids

Additional information, including a list of public laws, telephone numbers, reminders, and finding aids, appears in the Reader Aids section at the end of this issue.

Electronic Bulletin Board

Free Electronic Bulletin Board service for Public Law numbers, Federal Register finding aids, and a list of documents on public inspection is available on 202–275–1538 or 275–0920.

CFR PARTS AFFECTED IN THIS ISSUE

A cumulative list of the parts affected this month can be found in the Reader Aids section at the end of this issue.

5 CFR
532.....27243
591.....27243

7 CFR
457.....27244
925.....27245
947.....27247
953.....27248
958.....27250
3401.....27752

Proposed Rules:
457.....27315

14 CFR
39 (2 documents) 27251, 27253

Proposed Rules:
39.....27322

15 CFR
754.....27255
758.....27255
762.....27255

26 CFR
1.....27258

30 CFR
203.....27263

31 CFR
411.....27280

37 CFR

Proposed Rules:
Ch. II.....27322

38 CFR
1 (2 documents) 27281, 27282

42 CFR
417.....27282

Proposed Rules:
412.....27444
413.....27444
489.....27444

47 CFR

Proposed Rules:
36.....27323
69.....27323

49 CFR
571.....27288

Proposed Rules:
195.....27323
571.....27325

50 CFR
630.....27304
651.....27710
672 (2 documents) 27308, 27312
675.....27312

Rules and Regulations

Federal Register
Vol. 61, No. 106
Friday, May 31, 1996

This section of the FEDERAL REGISTER contains regulatory documents having general applicability and legal effect, most of which are keyed to and codified in the Code of Federal Regulations, which is published under 50 titles pursuant to 44 U.S.C. 1510.

The Code of Federal Regulations is sold by the Superintendent of Documents. Prices of new books are listed in the first FEDERAL REGISTER issue of each week.

OFFICE OF PERSONNEL MANAGEMENT

5 CFR Part 532

RIN 3206–AH30

Prevailing Rate Systems; Abolishment of Merced, CA, Nonappropriated Fund Wage Area

AGENCY: Office of Personnel Management.

ACTION: Final rule.

SUMMARY: The Office of Personnel Management is issuing a final rule to abolish the Merced, CA, nonappropriated fund (NAF) Federal Wage System (FWS) wage area and redefine the county having continuing FWS employment (Fresno) as an area of application to the Kern, CA, NAF wage area for pay-setting purposes. The remaining Merced wage area county (Merced) has no FWS employment and is being deleted.

EFFECTIVE DATE: July 1, 1996.

FOR FURTHER INFORMATION CONTACT: Paul Shields, (202) 606–2848.

SUPPLEMENTARY INFORMATION: On February 15, 1996, the Office of Personnel Management (OPM) published an interim rule to abolish the Merced, CA, nonappropriated fund (NAF) Federal Wage System (FWS) wage area and redefine the county having continuing FWS employment (Fresno County) as an area of application to the Kern, CA, NAF wage area for pay-setting purposes. The remaining Merced wage area county (Merced) is being deleted because is has no FWS employment. The interim rule provided a 30-day period for public comment. OPM received no comments during the comment period. Therefore, the interim rule is being adopted as a final rule.

Regulatory Flexibility Act

I certify that these regulations will not have a significant economic impact on a substantial number of small entities because they will affect only Federal agencies and employees.

List of Subjects in 5 CFR Part 532

Administrative practice and procedure, Freedom of information, Government employees, Reporting and recordkeeping requirements, Wages.

Accordingly, under the authority of 5 U.S.C. 5343, the interim rule amending 5 CFR part 532 published on February 15, 1996 (61 FR 5921), is adopted as final without any changes.

Office of Personnel Management.

Lorraine A. Green,

Deputy Director,

[FR Doc. 96–13683 Filed 5–30–96; 8:45 am]

BILLING CODE 6325–01–M

5 CFR Part 591

RIN 3206–AH17

Allowances and Differentials; Separate Maintenance Allowance for Duty at Johnston Island

AGENCY: Office of Personnel Management.

ACTION: Final rule.

SUMMARY: The Office of Personnel Management (OPM) is issuing final regulations to change the method for setting separate maintenance allowance (SMA) rates for duty at Johnston Island. Under this method, SMA rates for Johnston Island are set at the same amount and adjusted at the same time as SMA rates established by the Department of State for employees who receive SMA's in foreign areas.

EFFECTIVE DATE: July 1, 1996.

FOR FURTHER INFORMATION CONTACT: Roger M. Knadle, (202) 606–2858, or FAX: (202) 606–0824.

SUPPLEMENTARY INFORMATION: On October 17, 1995, the Office of Personnel Management published proposed regulations (60 FR 53716) to set and adjust the SMA rates for Johnston Island (a non-foreign area) at the same time and in the same manner as SMA rates for employees in foreign areas. The 60-day public comment period ended on December 18, 1995. We received one comment from one agency supporting the regulations as proposed. Therefore, OPM is issuing final regulations that are the same as the proposed regulations.

An SMA is paid to employees assigned to Johnston Island to help meet the additional expense of maintaining family members elsewhere who would normally reside with the employee. Johnston Island is a possession of the United States in the Pacific Ocean and is a non-foreign post of duty. Much of the island is devoted to chemical weapon storage and disposal facilities. Because of hazardous conditions (toxic waste) and the lack of facilities, family members are not allowed on the island.

Civilian employees assigned to foreign areas who are precluded from establishing a residence because of local living conditions or Federal policy are authorized an SMA established by the Department of State that is periodically updated based on the Consumer Price Index (CPI) and budgetary considerations. The final regulations abolish the current SMA rates established by OPM regulations and provide that SMA rates for Johnston Island will be set and adjusted at the same time and in the same amount as SMA rates established by the *Standardized Regulations (Government Civilians, Foreign Areas)* of the Department of State for employees in foreign areas. This maintains equity between civilian employees assigned to foreign and non-foreign areas. The final regulations apply only to Federal civilian employees assigned to Johnston Island.

The SMA rates will be adjusted on the first day of the first pay period beginning on or after the effective date of these regulations. Subsequently, the SMA rates will be adjusted on the first day of the first pay period beginning on or after the effective date of SMA rate adjustments under the Department of State's *Standardized Regulations (Government Civilians, Foreign Areas).* This change in methodology for setting SMA rates is not retroactive.

Regulatory Flexibility Act

I certify that these regulations will not have a significant economic impact on a substantial number of small entities because they will affect only Federal agencies and employees.

List of Subjects in 5 CFR Part 591

Government employees, Travel and transportation expenses, Wages.

Office of Personnel Management.

James B. King,

Director.

Accordingly, OPM is amending part 591 of title 5, Code of Federal Regulations, as follows:

PART 591—ALLOWANCES AND DIFFERENTIALS

Subpart D—Separate Maintenance Allowance for Duty at Johnston Island

1. The authority citation for subpart D of part 591 is revised to read as follows:

Authority: 5 U.S.C. 5942a(b); E.O. 12822, 3 CFR, 1992 Comp., p. 325

2. In § 591.401, paragraph (a) is revised to read as follows:

§ 591.401 Purpose and applicability.

(a) *Purpose.* This subpart prescribes the regulations required by section 5942a of title 5, United States Code, to authorize payment of a separate maintenance allowance to assist an employee assigned to Johnston Island to meet the additional expenses of maintaining family members elsewhere who would normally reside with him or her because they cannot accompany the employee to Johnston Island. This subpart provides rules for determining which employees are eligible to receive the separate maintenance allowance, who qualifies as family members under the program, the method of payment, and payment amounts.

* * * * *

3. Section 591.402 is revised to read as follows:

§ 591.402 Definitions.

Adult, a term used in the Department of State *Standardized Regulations (Government Civilians, Foreign Areas),* means a family member who is 21 years of age or older.

Family member means one or more of the following relatives of an employee who would normally reside with the employee except for circumstances warranting the granting of a separate maintenance allowance, but who does not receive from the Government an allowance similar to that granted to the employee and who is not deemed to be a family member of another employee for the purpose of determining the amount of a separate maintenance allowance or similar allowance:

(1) Children who are unmarried and under 21 years of age or, regardless of age, are incapable of self-support, including natural children, step and adopted children, and those under legal guardianship or custody of the employee or the spouse when they are expected to be under such legal guardianship or custody at least until they reach 21 years of age and when dependent upon and normally residing with the guardian;

(2) Parents (including step and legally adoptive parents) of the employee or of the spouse when such parents are at least 51 percent dependent on the employee for support;

(3) Sisters and brothers (including step or adoptive sisters and brothers) of the employee or of the spouse, when such sisters and brothers are at least 51 percent dependent on the employee for support, unmarried and under 21 years of age, or regardless of age, are incapable of self-support; or

(4) Spouse, excluding a spouse independently entitled to and receiving a similar allowance.

Johnston Island, also called Johnston Atoll, is a possession of the United States located 717 nautical miles southwest of Honolulu, Hawaii.

Separate maintenance allowance means an allowance to assist an employee assigned to Johnston Island who is compelled by reason of dangerous, notably unhealthful, or excessively adverse living conditions at Johnston Island, or for the convenience of the Government, to meet the additional expense of maintaining family members at a location other than Johnston Island.

4. Section 591.403 is revised to read as follows:

§ 591.403 Amount of payment.

(a) The annual rate of the separate maintenance allowance paid to an employee shall be determined by the number of individuals, including a spouse and/or one or more other family members, that are maintained at a location other than Johnston Island.

(b) The annual rates for the separate maintenance allowance paid to employees assigned to Johnston Island shall be the same as the annual rates for the separate maintenance allowance established by the Department of State in its *Standardized Regulations (Government Civilians, Foreign Areas).* The annual rates shall not vary by location of the separate household.

(c) The annual rates of the separate maintenance allowance shall be adjusted on the first day of the first pay period beginning on or after July 1, 1996 and, subsequently, on the first day of the first pay period beginning on or after the effective date established for adjustment of annual rates for the separate maintenance allowance in the *Standardized Regulations (Government Civilians, Foreign Areas).*

5. Section 591.405 is revised to read as follows:

§ 591.405 Responsibilities of agencies.

Agencies with employees stationed at Johnston Island may require reasonable verification of relationship and dependency.

[FR Doc. 96–13682 Filed 5–30–96; 8:45 am]

BILLING CODE 6325–01–M

DEPARTMENT OF AGRICULTURE

Federal Crop Insurance Corporation

7 CFR Part 457

RIN 0563–AB24

Common Crop Insurance Regulations; Malting Barley Price and Quality Endorsement Crop Insurance Provisions; Correction

AGENCY: Federal Crop Insurance Corporation, Department of Agriculture.

ACTION: Correcting amendments.

SUMMARY: This document contains technical corrections to the final regulations, published Wednesday, March 6, 1996 (61 FR 8851), concerning the insurance contract requirements under the Malting Barley Price and Quality Endorsement crop provisions of the Common Crop Insurance Policy.

EFFECTIVE DATE: May 30, 1996.

FOR FURTHER INFORMATION CONTACT: Rob Coultis, Program Analyst, Research and Development Division, Product Development Branch, FCIC, at 9435 Holmes Road, Kansas City, MO 64131, telephone (816) 926–7730 (not a toll-free call).

SUPPLEMENTARY INFORMATION:

Background

The final regulation that is the subject of these technical corrections was intended to make available a new insurance coverage for producers of malting barley. As published, the final regulations contained an error in the calculation used to reduce the amount of production to count when damaged production is accepted by a buyer for malting purposes. As published, the quality adjustment factor used to reduce the amount of damaged production is calculated by dividing an established value of undamaged production (the maximum additional value price election) by the price per bushel received for damaged production. The application of this calculation will increase the production to count, not

reduce it. To establish the appropriate factor for reducing the production to count to take into consideration an amount of damaged production, the regulation should have stated that the price per bushel received for damaged production would be divided by the established value of undamaged production.

Need for Correction

As published, the final regulations contain errors which may prove to be misleading and are in need of clarification.

List of Subjects in 7 CFR Part 457

Malting Barley Crop Insurance.

PART 457—COMMON CROP INSURANCE REGULATIONS; REGULATIONS FOR THE 1991 AND SUBSEQUENT CONTRACT YEARS

Accordingly, 7 CFR Part 457 is corrected by making the following correcting amendments:

1. On page 8856 in the second column, section 4(b)(2) of Option A is corrected to read ''Dividing the price per bushel received for the damaged production by the result of paragraph (1); and''

2. On page 8857 in the second column, section 4(b)(2) of Option B is corrected to read ''Dividing the price per bushel received for the damaged production by the result of paragraph (1); and''

Signed in Washington, D.C., on May 23, 1996.

Kenneth D. Ackerman,

Manager, Federal Crop Insurance Corporation.

[FR Doc. 96–13591 Filed 5–30–96; 8:45 am]

BILLING CODE 3410–FA–P

Agricultural Marketing Service

7 CFR Part 925

[Docket No. FV95–925–1FIR]

Grapes Grown in a Designated Area of Southeastern California; Revision of Container Requirements

AGENCY: Agricultural Marketing Service, USDA.

ACTION: Final rule.

SUMMARY: The Department of Agriculture (Department) is adopting as a final rule, the provisions of an interim final rule with correction which added two new containers to the list of containers authorized for use by table grape handlers regulated under the marketing order. This rule also reduces the minimum net weight of containers of California table grapes from 22 pounds to 20 pounds and for grapes packed in poly bags from 20 pounds to 18 pounds. The marketing order regulates the handling of table grapes grown in a designated area of Southeastern California. The marketing order is locally administered by the California Desert Grape Administrative Committee (CDGAC). This rule allows for more efficient use of containers and helps handlers meet industry needs.

EFFECTIVE DATE: July 1, 1996.

FOR FURTHER INFORMATION CONTACT: Charles L. Rush, Marketing Order Administration Branch, Fruit and Vegetable Division, AMS, USDA, P.O. Box 96456, room 2526–S, Washington, DC 20090–6456, telephone (202) 690–3670; or Rose M. Aguayo, California Marketing Field Office, Marketing Order Administration Branch, Fruit and Vegetable Division, AMS, USDA, 2202 Monterey Street, Suite 102B, Fresno, California 93721; telephone (209) 487–5901.

SUPPLEMENTARY INFORMATION: This final rule is issued under Marketing Order No. 925 [7 CFR Part 925], as amended, regulating the handling of table grapes grown in a designated area of Southeastern California, hereinafter referred to as the ''order.'' The order is effective under the Agricultural Marketing Agreement Act of 1937, as amended [7 U.S.C. 601–674], hereinafter referred to as the ''Act.''

The Department of Agriculture (Department) is issuing this final rule in conformance with Executive Order 12866.

This rule has been reviewed under Executive Order 12778, Civil Justice Reform. This rule is not intended to have retroactive effect. This rule will not preempt any State or local laws, regulations, or policies, unless they present an irreconcilable conflict with this rule.

The Act provides that administrative proceedings must be exhausted before parties may file suit in court. Under section 608c(15)(A) of the Act, any handler subject to an order may file with the Secretary a petition stating that the order, any provision of the order, or any obligation imposed in connection with the order is not in accordance with law and request a modification of the order or to be exempted therefrom. A handler is afforded the opportunity for a hearing on the petition. After the hearing the Secretary would rule on the petition. The Act provides that the district court of the United States in any district in which the handler is an inhabitant, or has his or her principal place of business, has jurisdiction to review the Secretary's ruling on the petition, provided an action is filed not later than 20 days after the date of the entry of the ruling.

Pursuant to requirements set forth in the Regulatory Flexibility Act (RFA), the Agricultural Marketing Service (AMS) has considered the economic impact of this rule on small entities.

The purpose of the RFA is to fit regulatory actions to the scale of business subject to such actions in order that small businesses will not be unduly or disproportionately burdened. Marketing orders issued pursuant to the Act, and rules issued thereunder, are unique in that they are brought about through group action of essentially small entities acting on their own behalf. Thus, both statutes have small entity orientation and compatibility.

There are approximately 20 handlers of California table grapes subject to regulation under the order and approximately 80 table grape producers in the production area. Small agricultural service firms are defined by the Small Business Administration (13 CFR 121.601) as those whose annual receipts are less than $5,000,000, and small agricultural producers have been defined as those having annual receipts of less than $500,000. A minority of handlers and producers are classified as small entities.

This rule finalizes changes in the container requirements under the marketing order for grapes grown in designated areas of Southeastern California. This rule also finalizes a reduction in the minimum net weight of containers of California table grapes from 22 pounds to 20 pounds and for grapes packed in poly bags from 20 pounds to 18 pounds. These changes were unanimously recommended by the CDGAC.

An interim final rule was issued on March 11, 1996, and published in the Federal Register (61 FR 11127, March 19, 1996), with an effective date of March 19, 1996. That rule amended § 925.304 of the rules and regulations in effect under the order. That rule provided a 30-day comment period which ended April 18, 1996. No comments were received. A correction document was issued on March 25, 1996, and published in the Federal Register (61 FR 14013, March 29, 1996). The document corrected amendatory language number 2 of the interim final rule.

This action is in accordance with § 925.52(a)(4) of the order. This section authorizes the Secretary to fix the size, capacity, weight, dimensions, markings,

materials, and pack of containers which may be used in the handling of grapes.

Prior to the effective date of the interim final rule, § 925.304 (b)(2) of the regulations specified that the minimum net weight requirement for grapes in any container, except for containers containing grapes packed in sawdust, cork, excelsior, or similar packing material, or packed in bags or wrapped in plastic or paper, and experimental containers, be 22 pounds based on the average net weight of grapes in a representative sample of containers. Containers of grapes packed in bags or wrapped in plastic or paper prior to being placed in these containers were required to meet a net weight requirement of 20 pounds.

Section 925.304 (b)(1) of the regulations specified the dimensions of six containers that could be used by handlers of table grapes and authorized the use of other types and sizes of containers on an experimental basis.

The CDGAC met on November 27, and December 4, 1995, and unanimously recommended changes in the container requirements. Specifically, the CDGAC recommended reducing the minimum net weight of containers from 22 to 20 pounds and for containers of grapes wrapped or packed in poly bags from 20 to 18 pounds, effective April 20, 1996. The CDGAC also unanimously recommended adding two new containers (38S, 12 x 20 inches) and (38T, 13⅛ x 15⅞ inches) to the list of authorized containers. These changes are intended to improve the quality of grapes delivered to consumers and reduce handling costs.

The genesis for discussion of revising containers used to pack grapes began about 6 years ago when the recyclability of packaging materials became of interest to consumers worldwide and then to retailers who bore the brunt of consumers' concern. In addition to the environmental concern expressed by consumers, retailers were concerned about the increasing costs of disposing of packing and shipping materials.

Simultaneously, in an effort to differentiate themselves in the marketplace, many in the retail industry began demanding that grape growers provide custom packs. One customer wanted only a certain type of bag, another wanted only 5-kilo bags, another wanted bags with nothing printed on them, while yet another wanted a special store code.

These kinds of demands from the retail and food service industry led to a great deal of packaging experimentation within the California grape industry. It also led to the realization that it had been 25 years since there had been any quantifiable packaging research. The industry decided to take a critical look at grape packaging and determine if current practices were getting the product to the retailer and ultimately the consumer in the best possible condition; and if not, what changes needed to be made to improve delivery. Toward that end, the California Table Grape Commission funded a three-year research project designed to answer a simple question: what types of containers get grapes to the consumer in the best possible condition?

Grapes are a fragile product. The current method of packing is a holdover from 25 years ago when grapes were sold at auctions and it was considered a marketing advantage to overpack the box so that when buyers looked at the box it was bulging with fruit. Too often though, what they did not see was the condition of the fruit inside; crushed, split or falling off the stem. In addition, the standard lug box in use today was designed to fit railroad cars. Shipping grapes by rail car is a part of the industry's past.

The study of table grape packaging was conducted by the University of California at Davis and the University of California at Kearney Agricultural Center at Parlier. The objective of the study was to develop knowledge concerning packaging that allows the movement of table grapes from the field to the consumer in the best possible condition. At the reduced weight, the damage to the grapes, particularly in terms of bruising, splitting and shattering, decreases. Table grapes of most varieties suffered considerable damage when packed at net weights of 22 or 23 pounds. The damage was reduced considerably when the pack weights were reduced to 20 to 21 pounds.

Through the research conducted the CDGAC determined that other container size and net weight options available were not in the best interest of the industry. Further, wholesalers and retailers support the recommended changes, and believe it is the best option.

Thus, the CDGAC's recommendation to reduce the minimum net weight requirements is expected to result in higher quality grapes being offered to consumers. This should increase satisfaction, strengthen demand, and improve returns to growers and handlers.

Most grapes packed in California are palletized on 35- x 42-inch or 53- x 42-inch pallets prior to shipment. When received by wholesalers or retailers, the grapes are unloaded and restacked on 48- x 40-inch pallets.

Grocery and wholesale warehouse operations use 48- x 40-inch pallets as the standard pallet for most products. The bulk of product sold at retail outlets (e.g., cereal, paper products, canned goods, etc.) are dry goods. These products are generally shipped on 48- x 40-pallets. Consequently, the distribution channel is set up to accommodate 48- x 40-inch pallets.

Nonstandard pallets such as those used by grape handlers have to be disposed of at the receivers' expense. However, with the use of 48- x 40-inch pallets, which can be recycled, there should be a reduction in expenses associated with pallets. The recycling program allows the receiver to use the pallet more than once or remove it from the waste stream to use or sell.

The changes in container requirements are supported by the California Department of Agriculture, the California Grape and Tree Fruit League, the California Table Grape Commission, the Food Marketing Institute, and the National Association of Perishable Agricultural Receivers. These organizations have all agreed that the reduction in net weight is necessary to facilitate the implementation of an industry-wide adoption of the standardized 48- x 40-inch pallet and the incidence of damage to fruit due to over packing.

Thus, this rule allows the industry to use more efficient containers and provides handlers with more flexibility in packing table grapes. Imported table grapes will not be affected by this rule.

Based on the above, the AMS has determined that this action will not have a significant economic impact on a substantial number of small entities.

After consideration of all relevant material presented, including the CDGAC's recommendation, and other available information, it is found that finalizing the interim final rule, which was published in the Federal Register (61 FR 11127, March 19, 1996) and corrected in the Federal Register (61 FR 14013, March 29, 1996) will tend to effectuate the declared policy of the Act.

List of Subjects in 7 CFR Part 925

Grapes, Marketing agreements, Reporting and recordkeeping requirements.

For the reasons set forth in the preamble, 7 CFR part 925 is amended as follows:

1. The authority citation for 7 CFR part 925 continues to read as follows:

Authority: 7 U.S.C. 601–674.

PART 925—GRAPES GROWN IN A DESIGNATED AREA OF SOUTHEASTERN CALIFORNIA

Accordingly, the interim final rule amending 7 CFR part 925 which was published at 61 FR 11127, March 19, 1996, and corrected at 61 FR 14013, March 29, 1996, is adopted as a final rule.

Dated: May 22, 1996.

Robert C. Keeney,

Director, Fruit and Vegetable Division.

[FR Doc. 96–13616 Filed 5–30–96; 8:45 am]

BILLING CODE 3410–02–P

---

7 CFR Part 947

[Docket No. FV96–947–1IFR]

Oregon-California Potatoes; Assessment Rate

AGENCY: Agricultural Marketing Service, USDA.

ACTION: Interim final rule with request for comments.

SUMMARY: This interim final rule establishes an assessment rate for the Oregon-California Potato Committee (Committee) under Marketing Order No. 947 for the 1996–97 and subsequent fiscal periods. The Committee is responsible for local administration of the marketing order which regulates the handling of Irish potatoes grown in Oregon-California. Authorization to assess potato handlers enables the Committee to incur expenses that are reasonable and necessary to administer the program.

DATES: Effective on July 1, 1996. Comments received by July 1, 1996, will be considered prior to issuance of a final rule.

ADDRESSES: Interested persons are invited to submit written comments concerning this rule. Comments must be sent in triplicate to the Docket Clerk, Fruit and Vegetable Division, AMS, USDA, PO Box 96456, room 2523–S, Washington, DC 20090–6456, FAX 202–720–5698. Comments should reference the docket number and the date and page number of this issue of the Federal Register and will be available for public inspection in the Office of the Docket Clerk during regular business hours.

FOR FURTHER INFORMATION CONTACT: Martha Sue Clark, Marketing Order Administration Branch, Fruit and Vegetable Division, AMS, USDA, PO Box 96456, room 2523–S, Washington, DC 20090–6456, telephone 202–720–9918, FAX 202–720–5698, or Teresa L. Hutchinson, Northwest Marketing Field Office, Fruit and Vegetable Division, AMS, USDA, Green-Wyatt Federal Building, room 369, 1220 Southwest Third Avenue, Portland, OR 97204, telephone 503–326–2724, FAX 503–326–7440.

SUPPLEMENTARY INFORMATION: This rule is issued under Marketing Agreement No. 114 and Order No. 947, both as amended (7 CFR part 947), regulating the handling of Irish potatoes grown in Oregon-California, hereinafter referred to as the ''order.'' The order is effective under the Agricultural Marketing Agreement Act of 1937, as amended (7 U.S.C. 601–674), hereinafter referred to as the ''Act.''

The Department of Agriculture (Department) is issuing this rule in conformance with Executive Order 12866.

This rule has been reviewed under Executive Order 12778, Civil Justice Reform. Under the marketing order now in effect, Oregon-California potato handlers are subject to assessments. Funds to administer the order are derived from such assessments. It is intended that the assessment rate as issued herein will be applicable to all assessable potatoes beginning July 1, 1996, and continuing until amended, suspended, or terminated. This rule will not preempt any State or local laws, regulations, or policies, unless they present an irreconcilable conflict with this rule.

The Act provides that administrative proceedings must be exhausted before parties may file suit in court. Under section 608c(15)(A) of the Act, any handler subject to an order may file with the Secretary a petition stating that the order, any provision of the order, or any obligation imposed in connection with the order is not in accordance with law and request a modification of the order or to be exempted therefrom. Such handler is afforded the opportunity for a hearing on the petition. After the hearing the Secretary would rule on the petition. The Act provides that the district court of the United States in any district in which the handler is an inhabitant, or has his or her principal place of business, has jurisdiction to review the Secretary's ruling on the petition, provided an action is filed not later than 20 days after the date of the entry of the ruling.

Pursuant to requirements set forth in the Regulatory Flexibility Act (RFA), the Agricultural Marketing Service (AMS) has considered the economic impact of this rule on small entities.

The purpose of the RFA is to fit regulatory actions to the scale of business subject to such actions in order that small businesses will not be unduly or disproportionately burdened. Marketing orders issued pursuant to the Act, and the rules issued thereunder, are unique in that they are brought about through group action of essentially small entities acting on their own behalf. Thus, both statutes have small entity orientation and compatibility.

There are approximately 550 producers of Oregon-California potatoes in the production area and approximately 40 handlers subject to regulation under the marketing order. Small agricultural producers have been defined by the Small Business Administration (13 CFR 121.601) as those having annual receipts of less than $500,000, and small agricultural service firms are defined as those whose annual receipts are less than $5,000,000. The majority of Oregon-California potato producers and handlers may be classified as small entities.

The Oregon-California potato marketing order provides authority for the Committee, with the approval of the Department, to formulate an annual budget of expenses and collect assessments from handlers to administer the program. The members of the Committee are producers and handlers of Oregon-California potatoes. They are familiar with the Committee's needs and with the costs for goods and services in their local area and are thus in a position to formulate an appropriate budget and assessment rate. The assessment rate is formulated and discussed in a public meeting. Thus, all directly affected persons have an opportunity to participate and provide input.

The Committee met on March 28, 1996, and unanimously recommended 1996–97 expenditures of $61,200 and an assessment rate of $0.005 per hundredweight of potatoes. In comparison, last year's budgeted expenditures were $46,200. The assessment rate of $0.005 is $0.001 less than last year's established rate. Major expenditures recommended by the Committee for the 1996–97 year include $30,000 for an agreement with the Oregon Potato Commission to provide services to the Committee and $8,100 for a contingency fund. Budgeted expenses for these items in 1995–96 were $24,000 and $100, respectively. The contingency fund was increased as the Committee is considering a possible marketing research and development project in conjunction with the Oregon Potato Commission.

The assessment rate recommended by the Committee was derived by dividing anticipated expenses by expected shipments of Oregon-California potatoes. Potato shipments for the year

are estimated at 7,400,000 hundredweight which should provide $37,000 in assessment income. Income derived from handler assessments, along with funds from the Committee's authorized reserve, will be adequate to cover budgeted expenses. Funds in the reserve at the beginning of the 1996–97 fiscal period are estimated at $55,245. Funds in the reserve will be kept within the maximum permitted by the order.

While this rule will impose some additional costs on handlers, the costs are in the form of uniform assessments on all handlers. Some of the additional costs may be passed on to producers. However, these costs will be offset by the benefits derived by the operation of the marketing order. Therefore, the AMS has determined that this rule will not have a significant economic impact on a substantial number of small entities.

The assessment rate established in this rule will continue in effect indefinitely unless modified, suspended, or terminated by the Secretary upon recommendation and information submitted by the Committee or other available information.

Although this assessment rate is effective for an indefinite period, the Committee will continue to meet prior to or during each fiscal period to recommend a budget of expenses and consider recommendations for modification of the assessment rate. The dates and times of Committee meetings are available from the Committee or the Department. Committee meetings are open to the public and interested persons may express their views at those meetings. The Department will evaluate Committee recommendations and other available information to determine whether modification of the assessment rate is needed. Further rulemaking will be undertaken as necessary. The Committee's 1996–97 budget and those for subsequent fiscal periods will be reviewed and, as appropriate, approved by the Department.

After consideration of all relevant material presented, including the information and recommendation submitted by the Committee and other available information, it is hereby found that this rule, as hereinafter set forth, will tend to effectuate the declared policy of the Act.

Pursuant to 5 U.S.C. 553, it is also found and determined upon good cause that it is impracticable, unnecessary, and contrary to the public interest to give preliminary notice prior to putting this rule into effect, because: (1) The Committee needs to have sufficient funds to pay its expenses which are incurred on a continuous basis; (2) the 1996–97 fiscal period begins on July 1, 1996, and the marketing order requires that the rate of assessment for each fiscal period apply to all assessable potatoes handled during such fiscal period; (3) handlers are aware of this action which was unanimously recommended by the Committee at a public meeting and is similar to other assessment rate actions issued in past years; and (4) this interim final rule provides a 30-day comment period, and all comments timely received will be considered prior to finalization of this rule.

List of Subjects in 7 CFR Part 947

Marketing agreements, Potatoes, Reporting and recordkeeping requirements.

For the reasons set forth in the preamble, 7 CFR part 947 is amended as follows:

PART 947—IRISH POTATOES GROWN IN MODOC AND SISKIYOU COUNTIES, CALIFORNIA, AND IN ALL COUNTIES IN OREGON, EXCEPT MALHEUR COUNTY

1. The authority citation for 7 CFR part 947 continues to read as follows:

Authority: 7 U.S.C. 601–674.

2. A new subpart—Assessment Rates and a new § 947.247 are added to read as follows:

Note: This section will appear in the Code of Federal Regulations.

Subpart—Assessment Rates

§ 947.247 Assessment rate.

On and after July 1, 1996, an assessment rate of $0.005 per hundredweight is established for Oregon-California potatoes.

Dated: May 24, 1996.

Robert C. Keeney,

Director, Fruit and Vegetable Division.

[FR Doc. 96–13699 Filed 5–30–96; 8:45 am]

BILLING CODE 3410–02–P

---

7 CFR Part 953

[Docket No. FV96–953–1IFR]

Southeastern Potatoes; Assessment Rate

AGENCY: Agricultural Marketing Service, USDA.

ACTION: Interim final rule with request for comments.

SUMMARY: This interim final rule establishes an assessment rate for the Southeastern Potato Committee (Committee) under Marketing Order No. 953 for the 1996–97 and subsequent fiscal periods. The Committee is responsible for local administration of the marketing order which regulates the handling of Irish potatoes grown in two southeastern States (Virginia and North Carolina). Authorization to assess potato handlers enables the Committee to incur expenses that are reasonable and necessary to administer the program.

DATES: Effective on June 1, 1996. Comments received by July 1, 1996, will be considered prior to issuance of a final rule.

ADDRESSES: Interested persons are invited to submit written comments concerning this rule. Comments must be sent in triplicate to the Docket Clerk, Fruit and Vegetable Division, AMS, USDA, P.O. Box 96456, room 2523–S, Washington, DC 20090–6456, FAX 202–720–5698. Comments should reference the docket number and the date and page number of this issue of the Federal Register and will be available for public inspection in the Office of the Docket Clerk during regular business hours.

FOR FURTHER INFORMATION CONTACT: Martha Sue Clark, Marketing Order Administration Branch, Fruit and Vegetable Division, AMS, USDA, P.O. Box 96456, room 2523–S, Washington, DC 20090–6456, telephone 202–720–9918, FAX 202–720–5698.

SUPPLEMENTARY INFORMATION: This rule is issued under Marketing Agreement No. 104 and Order No. 953, both as amended (7 CFR part 953), regulating the handling of Irish potatoes grown in two southeastern States (Virginia and North Carolina), hereinafter referred to as the ''order.'' The order is effective under the Agricultural Marketing Agreement Act of 1937, as amended (7 U.S.C. 601–674), hereinafter referred to as the ''Act.''

The Department of Agriculture (Department) is issuing this rule in conformance with Executive Order 12866.

This rule has been reviewed under Executive Order 12778, Civil Justice Reform. Under the marketing order now in effect, Virginia-North Carolina potato handlers are subject to assessments. Funds to administer the order are derived from such assessments. It is intended that the assessment rate as issued herein will be applicable to all assessable potatoes beginning June 1, 1996, and continuing until amended, suspended, or terminated. This rule will not preempt any State or local laws, regulations, or policies, unless they present an irreconcilable conflict with this rule.

The Act provides that administrative proceedings must be exhausted before parties may file suit in court. Under section 608c(15)(A) of the Act, any handler subject to an order may file with the Secretary a petition stating that the order, any provision of the order, or any obligation imposed in connection with the order is not in accordance with law and request a modification of the order or to be exempted therefrom. Such handler is afforded the opportunity for a hearing on the petition. After the hearing the Secretary would rule on the petition. The Act provides that the district court of the United States in any district in which the handler is an inhabitant, or has his or her principal place of business, has jurisdiction to review the Secretary's ruling on the petition, provided an action is filed not later than 20 days after the date of the entry of the ruling.

Pursuant to requirements set forth in the Regulatory Flexibility Act (RFA), the Agricultural Marketing Service (AMS) has considered the economic impact of this rule on small entities.

The purpose of the RFA is to fit regulatory actions to the scale of business subject to such actions in order that small businesses will not be unduly or disproportionately burdened. Marketing orders issued pursuant to the Act, and the rules issued thereunder, are unique in that they are brought about through group action of essentially small entities acting on their own behalf. Thus, both statutes have small entity orientation and compatibility.

There are approximately 150 producers of Southeastern potatoes in the production area and approximately 60 handlers subject to regulation under the marketing order. Small agricultural producers have been defined by the Small Business Administration (13 CFR 121.601) as those having annual receipts of less than $500,000, and small agricultural service firms are defined as those whose annual receipts are less than $5,000,000. The majority of Southeastern potato producers and handlers may be classified as small entities.

The Southeastern potato marketing order provides authority for the Committee, with the approval of the Department, to formulate an annual budget of expenses and collect assessments from handlers to administer the program. The members of the Committee are producers and handlers of Southeastern potatoes. They are familiar with the Committee's needs and with the costs for goods and services in their local area and are thus in a position to formulate an appropriate budget and assessment rate. The assessment rate is formulated and discussed in a public meeting. Thus, all directly affected persons have an opportunity to participate and provide input.

The Committee met on April 18, 1996, and unanimously recommended 1996–97 expenditures of $12,000, the same as last year, and an assessment rate of $0.0075 per hundredweight. The assessment rate of $0.0075 is $0.0025 higher than last year's established rate. The major expenditures include $7,800 for the manager's and secretarial salaries and $900 for travel expenses.

The assessment rate recommended by the Committee was based on last year's shipments of 1,549,268 hundredweight of Southeastern potatoes, which should provide $11,619.51 in assessment income. Income derived from handler assessments, along with funds from the Committee's authorized reserve, will be adequate to cover budgeted expenses. Funds in the reserve at the beginning of the 1996–97 fiscal period are estimated at $8,877. Funds in the reserve will be kept within the maximum permitted by the order.

While this rule will impose some additional costs on handlers, the costs are in the form of uniform assessments on all handlers. Some of the additional costs may be passed on to producers. However, these costs will be offset by the benefits derived by the operation of the marketing order. Therefore, the AMS has determined that this rule will not have a significant economic impact on a substantial number of small entities.

The assessment rate established in this rule will continue in effect indefinitely unless modified, suspended, or terminated by the Secretary upon recommendation and information submitted by the Committee or other available information.

Although this assessment rate is effective for an indefinite period, the Committee will continue to meet prior to or during each fiscal period to recommend a budget of expenses and consider recommendations for modification of the assessment rate. The dates and times of Committee meetings are available from the Committee or the Department. Committee meetings are open to the public and interested persons may express their views at these meetings. The Department will evaluate Committee recommendations and other available information to determine whether modification of the assessment rate is needed. Further rulemaking will be undertaken as necessary. The Committee's 1996–97 budget and those for subsequent fiscal periods will be reviewed and, as appropriate, approved by the Department.

After consideration of all relevant material presented, including the information and recommendation submitted by the Committee and other available information, it is hereby found that this rule, as hereinafter set forth, will tend to effectuate the declared policy of the Act.

Pursuant to 5 U.S.C. 553, it is also found and determined upon good cause that it is impracticable, unnecessary, and contrary to the public interest to give preliminary notice prior to putting this rule into effect, and that good cause exists for not postponing the effective date of this rule until 30 days after publication in the Federal Register because: (1) The Committee needs to have sufficient funds to pay its expenses which are incurred on a continuous basis; (2) the 1996–97 fiscal period begins on June 1, 1996, and the marketing order requires that the rate of assessment for each fiscal period apply to all assessable Irish potatoes handled during such fiscal period; (3) handlers are aware of this action which was unanimously recommended by the Committee at a public meeting and is similar to the assessment rate action issued last year; and (4) this interim final rule provides a 30-day comment period, and all comments timely received will be considered prior to finalization of this rule.

List of Subjects in 7 CFR Part 953

Marketing agreements, Potatoes, Reporting and recordkeeping requirements.

For the reasons set forth in the preamble, 7 CFR part 953 is amended as follows:

PART 953—IRISH POTATOES GROWN IN SOUTHEASTERN STATES

1. The authority citation for 7 CFR part 953 continues to read as follows:

Authority: 7 U.S.C. 601–674.

2. A new subpart—Assessment Rates and a new § 953.253 are added to read as follows:

Note: This section will appear in the Code of Federal Regulations.

Subpart—Assessment Rates

§ 953.253 Assessment rate.

On and after June 1, 1996, an assessment rate of $0.0075 per hundredweight is established for Southeastern potatoes.

Dated: May 22, 1996.

Robert C. Keeney,

Director, Fruit and Vegetable Division.

[FR Doc. 96–13617 Filed 5–30–96; 8:45 am]

BILLING CODE 3410–02–P

---

7 CFR Part 958

[Docket No. FV96–958–2IFR]

Idaho-Eastern Oregon Onions; Assessment Rate

AGENCY: Agricultural Marketing Service, USDA.

ACTION: Interim final rule with request for comments.

SUMMARY: This interim final rule establishes an assessment rate for the Idaho-Eastern Oregon Onion Committee (Committee) under Marketing Order No. 958 for the 1996–97 and subsequent fiscal periods. The Committee is responsible for local administration of the marketing order which regulates the handling of onions grown in designated counties in Idaho, and Malheur County, Oregon.

Authorization to assess onion handlers enables the Committee to incur expenses that are reasonable and necessary to administer the program.

DATES: Effective on July 1, 1996. Comments received by July 1, 1996, will be considered prior to issuance of a final rule.

ADDRESSES: Interested persons are invited to submit written comments concerning this rule. Comments must be sent in triplicate to the Docket Clerk, Fruit and Vegetable Division, AMS, USDA, P.O. Box 96456, room 2523–S, Washington, DC 20090–6456, FAX 202–720–5698. Comments should reference the docket number and the date and page number of this issue of the Federal Register and will be available for public inspection in the Office of the Docket Clerk during regular business hours.

FOR FURTHER INFORMATION CONTACT: Martha Sue Clark, Marketing Order Administration Branch, Fruit and Vegetable Division, AMS, USDA, P.O. Box 96456, room 2523–S, Washington, DC 20090–6456, telephone 202–720–9918, FAX 202–720–5698, or Robert J. Curry, Northwest Marketing Field Office, Fruit and Vegetable Division, AMS, USDA, Green-Wyatt Federal Building, room 369–1220 Southwest Third Avenue, Portland, OR 97204, telephone 503–326–2724, FAX 503–326–7440.

SUPPLEMENTARY INFORMATION: This rule is issued under Marketing Agreement No. 130 and Order No. 958, both as amended (7 CFR part 958), regulating the handling of onions grown in designated counties in Idaho, and Malheur County, Oregon. The order is effective under the Agricultural Marketing Agreement Act of 1937, as amended (7 U.S.C. 601–674), hereinafter referred to as the ''Act.''

The Department of Agriculture (Department) is issuing this rule in conformance with Executive Order 12866.

This rule has been reviewed under Executive Order 12778, Civil Justice Reform. Under the marketing order now in effect, Idaho-Eastern Oregon onion handlers are subject to assessments. Funds to administer the order are derived from such assessments. It is intended that the assessment rate as issued herein will be applicable to all assessable onions beginning July 1, 1996, and continuing until amended, suspended, or terminated. This rule will not preempt any State or local laws, regulations, or policies, unless they present an irreconcilable conflict with this rule.

The Act provides that administrative proceedings must be exhausted before parties may file suit in court. Under section 608c(15)(A) of the Act, any handler subject to an order may file with the Secretary a petition stating that the order, any provision of the order, or any obligation imposed in connection with the order is not in accordance with law and request a modification of the order or to be exempted therefrom. Such handler is afforded the opportunity for a hearing on the petition. After the hearing the Secretary would rule on the petition. The Act provides that the district court of the United States in any district in which the handler is an inhabitant, or has his or her principal place of business, has jurisdiction to review the Secretary's ruling on the petition, provided an action is filed not later than 20 days after the date of the entry of the ruling.

Pursuant to requirements set forth in the Regulatory Flexibility Act (RFA), the Agricultural Marketing Service (AMS) has considered the economic impact of this rule on small entities.

The purpose of the RFA is to fit regulatory actions to the scale of business subject to such actions in order that small businesses will not be unduly or disproportionately burdened. Marketing orders issued pursuant to the Act, and the rules issued thereunder, are unique in that they are brought about through group action of essentially small entities acting on their own behalf. Thus, both statutes have small entity orientation and compatibility.

There are approximately 550 producers of Idaho-Eastern Oregon onions in the production area and approximately 34 handlers subject to regulation under the marketing order. Small agricultural producers have been defined by the Small Business Administration (13 CFR 121.601) as those having annual receipts of less than $500,000. The majority of Idaho-Eastern Oregon onion producers and handlers may be classified as small entities.

The Idaho-Eastern Oregon onion marketing order provides authority for the Committee, with the approval of the Department, to formulate an annual budget of expenses and collect assessments from handlers to administer the program. The members of the Committee are producers and handlers of Idaho-Eastern Oregon onions. They are familiar with the Committee's needs and with the costs of goods and services in their local area and are thus in a position to formulate an appropriate budget and assessment rate. The assessment rate is formulated and discussed in a public meeting. Thus, all directly affected persons have an opportunity to participate and provide input.

The Committee met on March 21, 1996, and unanimously recommended 1996–97 expenditures of $1,115,993 and an assessment rate of $0.10 per hundredweight of onions. In comparison, last year's budgeted expenditures were $1,111,447. The assessment rate of $0.10 is the same as last year's established rate. Major expenditures recommended by the Committee for the 1996–97 year include $10,000 for Committee expenses, $123,593 for salary expenses, $62,400 for travel and office expenses, $60,000 each for research and export, $725,000 for promotion, and $75,000 for a contingency fund. Budgeted expenses for these items in 1995–96 were $10,000, $121,431, $61,600, $59,340, $60,000, $724,076, and $75,000, respectively.

The assessment rate recommended by the Committee was derived by dividing anticipated expenses by expected shipments of Idaho-Eastern Oregon onions. Onion shipments for the year are estimated at 8,800,000 hundredweight, which should provide $880,000 in assessment income. Income derived from handler assessments, along with funds from interest income and the Committee's authorized reserve, will be adequate to cover budgeted expenses. Funds remaining in the reserve at the end of the 1995–96 fiscal period should be about $1,011,613. Funds in the reserve will be kept within the maximum permitted by the order.

While this rule will impose some additional costs on handlers, the costs

are in the form of uniform assessments on all handlers. Some of the additional costs may be passed on to producers. However, these costs will be offset by the benefits derived by the operation of the marketing order. Therefore, the AMS has determined that this rule will not have a significant economic impact on a substantial number of small entities.

The assessment rate established in this rule will continue in effect indefinitely unless modified, suspended, or terminated by the Secretary upon recommendation and information submitted by the Committee or other available information.

Although this assessment rate is effective for an indefinite period, the Committee will continue to meet prior to or during each fiscal period to recommend a budget of expenses and consider recommendations for modification of the assessment rate. The dates and times of Committee meetings are available from the Committee or the Department. Committee meetings are open to the public and interested persons may express their views at these meetings. The Department will evaluate Committee recommendations and other available information to determine whether modification of the assessment rate is needed. Further rulemaking will be undertaken as necessary. The Committee's 1996–97 budget and those for subsequent fiscal periods will be reviewed and, as appropriate, approved by the Department.

After consideration of all relevant material presented, including the information and recommendation submitted by the Committee and other available information, it is hereby found that this rule, as hereinafter set forth, will tend to effectuate the declared policy of the Act.

Pursuant to 5 U.S.C. 553, it is also found and determined upon good cause that it is impracticable, unnecessary, and contrary to the public interest to give preliminary notice prior to putting this rule into effect, because: (1) the Committee needs to have sufficient funds to pay its expenses which are incurred on a continuous basis; (2) the 1996–97 fiscal period begins on July 1, 1996, and the marketing order requires that the rate of assessment for each fiscal period apply to all assessable onions handled during such fiscal period; (3) handlers are aware of this action which was unanimously recommended by the Committee at a public meeting and is similar to other assessment rate actions issued in past years; and (4) this interim final rule provides a 30-day comment period, and all comments timely received will be considered prior to finalization of this rule.

List of Subjects in 7 CFR Part 958

Marketing agreements, Onions, Reporting and recordkeeping requirements.

For the reasons set forth in the preamble, 7 CFR part 958 is amended as follows:

PART 958—ONIONS GROWN IN CERTAIN DESIGNATED COUNTIES IN IDAHO, AND MALHEUR COUNTY, OREGON

1. The authority citation for 7 CFR part 958 continues to read as follows:

Authority: 7 U.S.C. 601–674.

2. A new subpart—Assessment Rates and a new § 958.240 are added to read as follows:

Note: This section will appear in the Code of Federal Regulations.

Subpart—Assessment Rates

§ 958.240 Assessment rate.

On and after July 1, 1996, an assessment rate of $0.10 per hundredweight is established for Idaho-Eastern Oregon onions.

Dated: May 22, 1996.

Robert C. Keeney,

Director, Fruit and Vegetable Division.

[FR Doc. 96–13618 Filed 5–30–96; 8:45 am]

BILLING CODE 3410–02–P

DEPARTMENT OF TRANSPORTATION

Federal Aviation Administration

14 CFR Part 39

[Docket No. 96–NM–98–AD; Amendment 39–9638; AD 96–11–13]

RIN 2120–AA64

Airworthiness Directives; McDonnell Douglas Model DC–9–80 Series Airplanes and Model MD–88 Airplanes

AGENCY: Federal Aviation Administration, DOT.

ACTION: Final rule; request for comments.

SUMMARY: This amendment adopts a new airworthiness directive (AD) that is applicable to certain McDonnell Douglas Model DC–9–80 series airplanes and Model MD–88 airplanes. This action requires a visual inspection to determine the type of fluorescent light ballasts installed in the cabin sidewall; and installation of a protective cover, replacement, or removal/disconnection, if necessary. This action also requires removal of the dust barriers from the outboard ceiling panels, and installation of modified outboard ceiling panels. This amendment is prompted by reports of smoke, fumes, and/or electrical fire emitting from the baggage bin of the aft passenger compartment and from the dust barriers of the outboard ceiling due to the failure of the fluorescent light ballasts. The actions specified in this AD are intended to prevent a fire in the passenger compartment, which could result from failure of the fluorescent light ballast of the upper and lower cabin sidewall, and subsequent failure of the dust barriers of the outboard ceiling panel.

DATES: Effective June 17, 1996.

The incorporation by reference of certain publications listed in the regulations is approved by the Director of the Federal Register as of June 17, 1996.

Comments for inclusion in the Rules Docket must be received on or before July 30, 1996.

ADDRESSES: Submit comments in triplicate to the Federal Aviation Administration (FAA), Transport Airplane Directorate, ANM–103, Attention: Rules Docket No. 96–NM–98–AD, 1601 Lind Avenue, SW., Renton, Washington 98055–4056.

The service information referenced in this AD may be obtained from McDonnell Douglas Corporation, 3855 Lakewood Boulevard, Long Beach, California 90846, Attention: Technical Publications Business Administration, Department C1–L51 (2–60). This information may be examined at the FAA, Transport Airplane Directorate, 1601 Lind Avenue, SW., Renton, Washington; or at the FAA, Los Angeles Aircraft Certification Office, Transport Airplane Directorate, 3960 Paramount Boulevard, Lakewood, California; or at the Office of the Federal Register, 800 North Capitol Street, NW., suite 700, Washington, DC.

FOR FURTHER INFORMATION CONTACT: J. Kirk Baker, Aerospace Engineer, Systems and Equipment Branch, ANM–130L, FAA, Los Angeles Aircraft Certification Office, 3960 Paramount Boulevard, Lakewood, California 90712; telephone (310) 627–5345; fax (310) 627–5210.

SUPPLEMENTARY INFORMATION: The FAA has received two reports of smoke, fumes, and/or electrical fire emitting from the baggage bin of the aft passenger compartment and from the dust barriers of the outboard ceiling panel on McDonnell Douglas Model DC–9–82 (MD–82) series airplanes. Investigation revealed that the existing design of the

light ballast assembly allows moisture condensation to ingress into the ballast case during altitude changes. The effects of such moisture subsequently contaminate the printed circuit card, which could result in a short circuit that ruptures the ballast casing and emits fire. In addition, investigation revealed that the failed light ballast assembly generated enough heat to ignite the dust barriers of the outboard ceiling panel; these barriers are flammable and have the potential to spread a fire to adjacent interior components. These conditions, if not corrected, could result in a fire in the passenger compartment.

Explanation of Relevant Service Information

The FAA has reviewed and approved McDonnell Douglas Alert Service Bulletin MD80–33A107, dated April 25, 1996, which describes the following procedures:

1. Performing a one-time visual inspection to determine the type of fluorescent light ballasts installed in the upper and lower cabin sidewall; and

2. Installing a protective cover on any Day-Ray Products Incorporated ballast, or replacing any Day-Ray Products Incorporated ballast with a Bruce Industries Incorporated ballast. Accomplishment of these actions will minimize the possibility of failure of the ballasts due to uncontained smoke and flame.

The FAA has also reviewed and approved McDonnell Douglas Alert Service Bulletin MD80–25A353, dated March 14, 1996, which describes procedures for removal of the dust barriers from the outboard ceiling panels, and installation of modified outboard ceiling panels. Accomplishment of this removal and installation will minimize the possibility of smoke or fire spreading into the cabin.

Explanation of the Requirements of the Rule

Since an unsafe condition has been identified that is likely to exist or develop on other McDonnell Douglas Model DC–9–80 series airplanes and Model MD–88 airplanes of the same type design, this AD is being issued to prevent a fire in the passenger compartment, which could result from the failure of the fluorescent light ballast of the upper and lower cabin sidewall, and the subsequent failure of the dust barriers of the outboard ceiling panel. This AD requires a one-time visual inspection to determine the type of fluorescent light ballasts installed in the upper and lower cabin sidewall. For airplanes on which any Day-Ray Products Incorporated ballast is installed, this AD also requires accomplishment of one of the following actions:

—Installation of a protective cover on the ballast; or

—Replacement of that ballast with a Bruce Industries Incorporated ballast.

Additionally, for some airplanes, this AD requires removal of the dust barriers from the outboard ceiling panels, and installation of modified outboard ceiling panels. The actions are required to be accomplished in accordance with the alert service bulletins described previously.

Operators should note that, in addition to the recommendations of McDonnell Douglas Alert Service Bulletin MD80–33A107, this AD provides an additional option for airplanes on which any Day-Ray Products Incorporated ballast is installed that involves removal or electrical disconnection of the ballast, stowage of the ballast, and protection of the loose wiring. The FAA finds that accomplishment of these actions will eliminate the identified unsafe condition for those airplanes.

In addition, the FAA is aware that parts availability may become a problem in the future. However, under the provisions of paragraph (d) of the final rule, the FAA may approve requests for adjustments to the compliance time if data are submitted to substantiate that such an adjustment would provide an acceptable level of safety.

Determination of Rule's Effective Date

Since a situation exists that requires the immediate adoption of this regulation, it is found that notice and opportunity for prior public comment hereon are impracticable, and that good cause exists for making this amendment effective in less than 30 days.

Comments Invited

Although this action is in the form of a final rule that involves requirements affecting flight safety and, thus, was not preceded by notice and an opportunity for public comment, comments are invited on this rule. Interested persons are invited to comment on this rule by submitting such written data, views, or arguments as they may desire. Communications shall identify the Rules Docket number and be submitted in triplicate to the address specified under the caption **ADDRESSES.** All communications received on or before the closing date for comments will be considered, and this rule may be amended in light of the comments received. Factual information that supports the commenter's ideas and suggestions is extremely helpful in evaluating the effectiveness of the AD action and determining whether additional rulemaking action would be needed.

Comments are specifically invited on the overall regulatory, economic, environmental, and energy aspects of the rule that might suggest a need to modify the rule. All comments submitted will be available, both before and after the closing date for comments, in the Rules Docket for examination by interested persons. A report that summarizes each FAA-public contact concerned with the substance of this AD will be filed in the Rules Docket.

Commenters wishing the FAA to acknowledge receipt of their comments submitted in response to this rule must submit a self-addressed, stamped postcard on which the following statement is made: ''Comments to Docket Number 96–NM–98–AD.'' The postcard will be date stamped and returned to the commenter.

Regulatory Impact

The regulations adopted herein will not have substantial direct effects on the States, on the relationship between the national government and the States, or on the distribution of power and responsibilities among the various levels of government. Therefore, in accordance with Executive Order 12612, it is determined that this final rule does not have sufficient federalism implications to warrant the preparation of a Federalism Assessment.

The FAA has determined that this regulation is an emergency regulation that must be issued immediately to correct an unsafe condition in aircraft, and that it is not a ''significant regulatory action'' under Executive Order 12866. It has been determined further that this action involves an emergency regulation under DOT Regulatory Policies and Procedures (44 FR 11034, February 26, 1979). If it is determined that this emergency regulation otherwise would be significant under DOT Regulatory Policies and Procedures, a final regulatory evaluation will be prepared and placed in the Rules Docket. A copy of it, if filed, may be obtained from the Rules Docket at the location provided under the caption **ADDRESSES.**

List of Subjects in 14 CFR Part 39

Air transportation, Aircraft, Aviation safety, Incorporation by reference, Safety.

Adoption of the Amendment

Accordingly, pursuant to the authority delegated to me by the Administrator, the Federal Aviation Administration amends part 39 of the Federal Aviation Regulations (14 CFR part 39) as follows:

PART 39—AIRWORTHINESS DIRECTIVES

1. The authority citation for part 39 continues to read as follows:

Authority: 49 U.S.C. 106(g), 40113, 44701.

§ 39.13 [Amended]

2. Section 39.13 is amended by adding the following new airworthiness directive:

96–11–13 McDonnell Douglas: Amendment 39–9638. Docket 96–NM–98–AD.

Applicability: Model DC–9–81 (MD–81), DC–9–82 (MD–82), DC–9–83 (MD–83), and DC–9–87 (MD–87) and Model MD–88 airplanes; as listed in McDonnell Douglas Alert Service Bulletin MD80–33A107, dated April 25, 1996; and McDonnell Douglas Alert Service Bulletin MD80–25A353, dated March 14, 1996; certificated in any category.

Note 1: This AD applies to each airplane identified in the preceding applicability provision, regardless of whether it has been otherwise modified, altered, or repaired in the area subject to the requirements of this AD. For airplanes that have been modified, altered, or repaired so that the performance of the requirements of this AD is affected, the owner/operator must request approval for an alternative method of compliance in accordance with paragraph (d) of this AD. The request should include an assessment of the effect of the modification, alteration, or repair on the unsafe condition addressed by this AD; and, if the unsafe condition has not been eliminated, the request should include specific proposed actions to address it.

Compliance: Required as indicated, unless accomplished previously.

To prevent failure of the fluorescent light ballast of the upper and lower cabin sidewall, and subsequent failure of the dust barriers of the outboard ceiling panel, which could result in a fire in the passenger compartment, accomplish the following:

(a) For all airplanes: Within 90 days after the effective date of this AD, perform a one-time visual inspection to determine the type of fluorescent light ballasts installed in the upper and lower cabin sidewall, in accordance with McDonnell Douglas Alert Service Bulletin MD80–33A107, dated April 25, 1996.

(1) If any Bruce Industries Incorporated ballast is installed (specified as Condition 1 in the alert service bulletin), no further action is required by this paragraph for that ballast.

(2) If any Day-Ray Products Incorporated ballast is installed (specified as Condition 2 in the alert service bulletin), prior to further flight, accomplish either paragraph (a)(2)(i), (a)(2)(ii), or (a)(2)(iii) of this AD.

(i) Install a protective cover on the ballast in accordance with Condition 2, Option 1, of the alert service bulletin. Or

(ii) Replace it with a Bruce Industries Incorporated ballast, in accordance with Condition 2, Option 2, of the alert service bulletin. Or

(iii) Remove or disconnect it electrically, stow it, and protect the loose wiring.

(b) For airplanes having manufacturer's fuselage numbers listed in McDonnell Douglas Alert Service Bulletin MD80–25A353, dated March 14, 1996: Within 90 days after the effective date of this AD, remove the dust barriers from the outboard ceiling panels, and install modified outboard ceiling panels, in accordance with McDonnell Douglas Alert Service Bulletin MD80–25A353, dated March 14, 1996.

(c) As of the effective date of this AD, no Day-Ray Products Incorporated ballast, having any part number identified in paragraph 1.2. of McDonnell Douglas Alert Service Bulletin MD80–33A107, dated April 25, 1996, shall be installed on any airplane unless that ballast has been modified in accordance with that alert service bulletin.

(d) An alternative method of compliance or adjustment of the compliance time that provides an acceptable level of safety may be used if approved by the Manager, Los Angeles Aircraft Certification Office (ACO), FAA, Transport Airplane Directorate. Operators shall submit their requests through an appropriate FAA Principal Maintenance Inspector, who may add comments and then send it to the Manager, Los Angeles ACO.

Note 2: Information concerning the existence of approved alternative methods of compliance with this AD, if any, may be obtained from the Los Angeles ACO.

(e) Special flight permits may be issued in accordance with sections 21.197 and 21.199 of the Federal Aviation Regulations (14 CFR 21.197 and 21.199) to operate the airplane to a location where the requirements of this AD can be accomplished.

(f) The inspection and replacement shall be done in accordance with McDonnell Douglas Alert Service Bulletin MD80–33A107, dated April 25, 1996. The removal of the dust barriers and installations shall be done in accordance with McDonnell Douglas Alert Service Bulletin MD80–25A353, dated March 14, 1996. This incorporation by reference was approved by the Director of the Federal Register in accordance with 5 U.S.C. 552(a) and 1 CFR part 51. Copies may be obtained from McDonnell Douglas Corporation, 3855 Lakewood Boulevard, Long Beach, California 90846, Attention: Technical Publications Business Administration, Department C1–L51 (2–60). Copies may be inspected at the FAA, Transport Airplane Directorate, 1601 Lind Avenue, SW., Renton, Washington; or at the FAA, Los Angeles Aircraft Certification Office, Transport Airplane Directorate, 3960 Paramount Boulevard, Lakewood, California; or at the Office of the Federal Register, 800 North Capitol Street, NW., suite 700, Washington, DC.

(g) This amendment becomes effective on June 17, 1996.

Issued in Renton, Washington, on May 22, 1996.

James V. Devany,

Acting Manager, Transport Airplane Directorate, Aircraft Certification Service.

[FR Doc. 96–13495 Filed 5–30–96; 8:45 am]

BILLING CODE 4910–13–P

DEPARTMENT OF TRANSPORTATION

Federal Aviation Administration

14 CFR Part 39

[Docket No. 96–NM–102–AD; Amendment 39–9639; AD 96–11–14]

RIN 2120–AA64

Airworthiness Directives; Saab Model SAAB 2000 Series Airplanes

AGENCY: Federal Aviation Administration, DOT.

ACTION: Final rule; request for comments.

SUMMARY: This amendment adopts a new airworthiness directive (AD) that is applicable to certain Saab Model SAAB 2000 series airplanes. This action requires inspections to detect cracking of the lower rib of the rudder, and repair, if necessary. This action also provides for an optional terminating action, which, if accomplished, terminates the repetitive inspection requirement. This amendment is prompted by reports of fatigue cracking of the lower rib of the rudder. The actions specified in this AD are intended to prevent such fatigue cracking and subsequent failure of the primary structure of the rudder, which could result in reduced controllability of the airplane.

DATES: Effective June 17, 1996.

The incorporation by reference of certain publications listed in the regulations is approved by the Director of the Federal Register as of June 17, 1996.

Comments for inclusion in the Rules Docket must be received on or before July 30, 1996.

ADDRESSES: Submit comments in triplicate to the Federal Aviation Administration (FAA), Transport Airplane Directorate, ANM–103, Attention: Rules Docket No. 96–NM–102–AD, 1601 Lind Avenue, SW., Renton, Washington 98055–4056.

The service information referenced in this AD may be obtained from SAAB

Aircraft AB, SAAB Aircraft Product Support, S–581.88, Linköping, Sweden. This information may be examined at the FAA, Transport Airplane Directorate, 1601 Lind Avenue, SW., Renton, Washington; or at the Office of the Federal Register, 800 North Capitol Street, NW., suite 700, Washington, DC.

FOR FURTHER INFORMATION CONTACT: Ruth E. Harder, Aerospace Engineer, Standardization Branch, ANM–113, FAA, Transport Airplane Directorate, 1601 Lind Avenue, SW., Renton, Washington 98055–4056; telephone (206) 227–1721; fax (206) 227–1149.

SUPPLEMENTARY INFORMATION: The Luftfartsverket (LFV), which is the airworthiness authority for Sweden, recently notified the FAA that an unsafe condition may exist on certain Saab Model 2000 series airplanes. The LFV advises that it has received reports indicating that cracking of the bottom rib of the elevator has been detected on two Model SAAB 2000 series airplanes. Investigation revealed that, loose pieces of the web were found inside the rudder on one airplane. The cause of the cracking has been attributed to fatigue. Fatigue cracking and subsequent failure of the rudder, if not detected and corrected in a timely manner, could result in reduced controllability of the airplane.

Explanation of Relevant Service Information

Saab has issued Service Bulletin SAAB 2000–55–005, dated February 2, 1996, which describes procedures for repetitive visual inspections to detect cracking of the lower rib of the rudder. The service bulletin also describes procedures for a temporary repair of cracking that is within certain specified limits. The LFV classified this service bulletin as mandatory and issued Swedish airworthiness directive SAD No. 1–088–R1 in order to assure the continued airworthiness of these airplanes in Sweden.

Additionally, Saab has issued Service Bulletin 2000–55–006, dated April 23, 1996, which describes procedures to modify the elevator by reinforcing the lower rib. This modification (Modification No. 5736) will prevent failure of the rudder due to fatigue cracking of the lower rib. Accomplishment of the modification eliminates the need for the repetitive visual inspections. The LFV has approved the technical content of this service bulletin.

FAA's Conclusions

This airplane model is manufactured in Sweden and is type certificated for operation in the United States under the provisions of section 21.29 of the Federal Aviation Regulations (14 CFR 21.29) and the applicable bilateral airworthiness agreement. Pursuant to this bilateral airworthiness agreement, the LFV has kept the FAA informed of the situation described above. The FAA has examined the findings of the LFV, reviewed all available information, and determined that AD action is necessary for products of this type design that are certificated for operation in the United States.

Explanation of Requirements of Rule

Since an unsafe condition has been identified that is likely to exist or develop on other airplanes of the same type design registered in the United States, this AD is being issued to prevent fatigue cracking of the lower rib of the rudder and subsequent failure of the primary structure of the rudder. Such failure could result in reduced controllability of the airplane. This AD requires repetitive visual inspections to detect cracking of the lower rib of the rudder, and repair, if necessary. The inspections and certain repairs are required to be accomplished in accordance with Saab Service Bulletin 2000–55–005, described previously. Repair of any cracking detected that is beyond the limits specified in that service bulletin is required to be accomplished in accordance with a method approved by the FAA.

This AD also provides for optional modification of the rudder, which, if accomplished, constitutes terminating action for the repetitive inspection requirements of this AD. If accomplished, the modification is required to be accomplished in accordance with SAAB Service Bulletin 2000–55–006.

This is considered to be interim action. The FAA is currently considering requiring the installation of the rudder modification that will constitute terminating action for the repetitive inspections required by this AD. However, the planned compliance time for the installation of the modification is sufficiently long so that notice and public comment will be practicable.

Determination of Rule's Effective Date

Since a situation exists that requires the immediate adoption of this regulation, it is found that notice and opportunity for prior public comment hereon are impracticable, and that good cause exists for making this amendment effective in less than 30 days.

Comments Invited

Although this action is in the form of a final rule that involves requirements affecting flight safety and, thus, was not preceded by notice and an opportunity for public comment, comments are invited on this rule. Interested persons are invited to comment on this rule by submitting such written data, views, or arguments as they may desire. Communications shall identify the Rules Docket number and be submitted in triplicate to the address specified under the caption **ADDRESSES.** All communications received on or before the closing date for comments will be considered, and this rule may be amended in light of the comments received. Factual information that supports the commenter's ideas and suggestions is extremely helpful in evaluating the effectiveness of the AD action and determining whether additional rulemaking action would be needed.

Comments are specifically invited on the overall regulatory, economic, environmental, and energy aspects of the rule that might suggest a need to modify the rule. All comments submitted will be available, both before and after the closing date for comments, in the Rules Docket for examination by interested persons. A report that summarizes each FAA-public contact concerned with the substance of this AD will be filed in the Rules Docket.

Commenters wishing the FAA to acknowledge receipt of their comments submitted in response to this rule must submit a self-addressed, stamped postcard on which the following statement is made: ''Comments to Docket Number 96–NM–102–AD.'' The postcard will be date stamped and returned to the commenter.

Regulatory Impact

The regulations adopted herein will not have substantial direct effects on the States, on the relationship between the national government and the States, or on the distribution of power and responsibilities among the various levels of government. Therefore, in accordance with Executive Order 12612, it is determined that this final rule does not have sufficient federalism implications to warrant the preparation of a Federalism Assessment.

The FAA has determined that this regulation is an emergency regulation that must be issued immediately to correct an unsafe condition in aircraft, and that it is not a ''significant regulatory action'' under Executive Order 12866. It has been determined further that this action involves an

emergency regulation under DOT Regulatory Policies and Procedures (44 FR 11034, February 26, 1979). If it is determined that this emergency regulation otherwise would be significant under DOT Regulatory Policies and Procedures, a final regulatory evaluation will be prepared and placed in the Rules Docket. A copy of it, if filed, may be obtained from the Rules Docket at the location provided under the caption **ADDRESSES**.

List of Subjects in 14 CFR Part 39

Air transportation, Aircraft, Aviation safety, Incorporation by reference, Safety.

Adoption of the Amendment

Accordingly, pursuant to the authority delegated to me by the Administrator, the Federal Aviation Administration amends part 39 of the Federal Aviation Regulations (14 CFR part 39) as follows:

PART 39—AIRWORTHINESS DIRECTIVES

1. The authority citation for part 39 continues to read as follows:

Authority: 49 USC 106(g), 40113, 44701.

§ 39.13 [Amended]

2. Section 39.13 is amended by adding the following new airworthiness directive:

96–11–14 SAAB Aircraft Ab: Amendment 39–9639. Docket 96–NM–102–AD.

Applicability: Model SAAB 2000 series airplanes; having serial numbers 004 through 039, inclusive; certificated in any category.

Note 1: This AD applies to each airplane identified in the preceding applicability provision, regardless of whether it has been otherwise modified, altered, or repaired in the area subject to the requirements of this AD. For airplanes that have been modified, altered, or repaired so that the performance of the requirements of this AD is affected, the owner/operator must request approval for an alternative method of compliance in accordance with paragraph (f) of this AD. The request should include an assessment of the effect of the modification, alteration, or repair on the unsafe condition addressed by this AD; and, if the unsafe condition has not been eliminated, the request should include specific proposed actions to address it.

Compliance: Required as indicated, unless accomplished previously.

To prevent fatigue cracking of the lower rib of the rudder and subsequent reduced controllability of the airplane, accomplish the following:

(a) Within 20 days after the effective date of this AD: Perform a visual inspection to detect cracking of the lower rib of the rudder, in accordance with Saab Service Bulletin 2000–55–005, dated February 2, 1996.

(b) If no cracking is detected: Thereafter, repeat the inspection required by paragraph (a) of this AD at intervals not to exceed 400 hours time-in-service, in accordance with Saab Service Bulletin 2000–55–005, dated February 2, 1996.

(c) If any cracking is detected that is 25 mm in length or less: Prior to further flight, perform a temporary repair in accordance with paragraph 2.C. of the Accomplishment Instructions of Saab Service Bulletin 2000–55–005, dated February 2, 1996. Thereafter, repeat the inspections required by paragraph (a) of this AD at intervals not to exceed 7 days.

(d) If any cracking is detected that is more than 25 mm in length: Prior to further flight, repair it in accordance with a method approved by the Manager, Standardization Branch, ANM–113, FAA, Transport Airplane Directorate.

(e) Modification of the lower rib of the rudder (Modification No. 5736), in accordance with Saab Service Bulletin 2000–55–006, dated April 23, 1996, constitutes terminating action for the repetitive inspection requirements of this AD.

(f) An alternative method of compliance or adjustment of the compliance time that provides an acceptable level of safety may be used if approved by the Manager, Standardization Branch, ANM–113. Operators shall submit their requests through an appropriate FAA Principal Maintenance Inspector, who may add comments and then send it to the Manager, Standardization Branch, ANM–113.

Note 2: Information concerning the existence of approved alternative methods of compliance with this AD, if any, may be obtained from the Standardization Branch, ANM–113.

(g) Special flight permits may be issued in accordance with sections 21.197 and 21.199 of the Federal Aviation Regulations (14 CFR 21.197 and 21.199) to operate the airplane to a location where the requirements of this AD can be accomplished.

(h) The inspections and temporary repair shall be done in accordance with Saab Service Bulletin 2000–55–005, dated February 2, 1996. This incorporation by reference was approved by the Director of the Federal Register in accordance with 5 U.S.C. 552(a) and 1 CFR part 51. Copies may be obtained from SAAB Aircraft AB, SAAB Aircraft Product Support, S–581.88, Linköping, Sweden. Copies may be inspected at the FAA, Transport Airplane Directorate, 1601 Lind Avenue, SW., Renton, Washington; or at the Office of the Federal Register, 800 North Capitol Street, NW., suite 700, Washington, DC.

(i) This amendment becomes effective on June 17, 1996.

Issued in Renton, Washington, on May 22, 1996.

John J. Hickey,

Acting Manager, Transport Airplane Directorate, Aircraft Certification Service.

[FR Doc. 96–13496 Filed 5–30–96; 8:45 am]

BILLING CODE 4910–13–P

DEPARTMENT OF COMMERCE

Bureau of Export Administration

15 CFR Parts 754, 758, and 762

[Docket No.960523147–01]

RIN 0694–AB44

Exports of Alaskan North Slope Crude Oil; Establishment of License Exception TAPS

AGENCY: Bureau of Export Administration, Commerce

ACTION: Final rule.

SUMMARY: The Bureau of Export Administration is amending the short supply provisions of the Export Administration Regulations to modify the restrictions on exports of Alaskan North Slope crude oil and establish License Exception TAPS authorizing such exports, with certain conditions. License Exception TAPS is based on: 1) Public Law 104–58, which allows for the export of crude oil transported by pipeline over right-of-way granted pursuant to section 203 of the Trans-Alaska Pipeline Authorization Act (TAPS); 2) the President's April 28, 1996 determination that exports are in the national interest; and 3) the President's direction to the Secretary of Commerce to issue a License Exception with conditions for export of TAPS crude oil.

EFFECTIVE DATE: May 28, 1996.

FOR FURTHER INFORMATION CONTACT: Bernard Kritzer, Office of Chemical and Biological Controls and Treaty Compliance, Bureau of Export Administration, Department of Commerce, Telephone: (202) 482–0894.

SUPPLEMENTARY INFORMATION:

Background

Section 7(d) of the Export Administration Act of 1979, (50 U.S.C. app. 2406) restricts exports of crude oil transported over right-of-way granted pursuant to section 203 of the Trans-Alaska Pipeline Authorization Act (43 U.S.C. 1652), with certain exceptions, unless the President makes certain findings, recommends exports to the Congress on the basis of those findings, and the Congress then agrees to the recommendation by joint resolution enacted into law. Although the Export Administration Act (EAA) expired on August 20, 1994, the President invoked the International Emergency Economic Powers Act and continued in effect, to the extent permitted by law, the provisions of the EAA and the EAR in Executive Order 12924 of August 19,

1994, and notice of August 15, 1995 (60 FR 42767).

On November 28, 1995, the President signed into law Public Law 104–58, which created a new section 28(s) of the Mineral Leasing Act (30 U.S.C. 185). Public Law 104–58 allows exports of oil transported over right-of-way granted pursuant to section 203 of the Trans-Alaska Pipeline Authorization Act (43 U.S.C. 1652), ''notwithstanding any provision of this Act or any other provision of law (including any regulation),'' unless the President finds that such exports are not in the national interest.

To address the economic and environmental issues identified in Public Law 104–58, the National Economic Council and the Council on Environmental Quality working with the Department of Commerce's Bureau of Export Administration, coordinated an intensive interagency review of the effects of lifting the export ban on oil transported over right-of-way granted pursuant to section 203 of the Trans-Alaska Pipeline Authorization Act (TAPS oil). After extensive public hearings, the review of public comments, and analytical evaluation, the interagency working group found that the exports are not likely to pose a significant impact to the economy or the environment.

On April 28, 1996, the President determined that, subject to certain conditions described below, exports of crude oil transported over right-of-way granted pursuant to section 203 of the Trans-Alaska Pipeline Authorization Act (TAPS) are in the national interest. The President found that such exports:

(1) Will not diminish the total quantity or quality of petroleum available to the United States;

(2) Will not pose significant risks to the environment with the imposition of a series of measures to further ensure the safety of the environment; and

(3) Are not likely to cause sustained material oil supply shortages or sustained oil price increases above world market levels that would cause sustained material adverse employment effects in the United States or that would cause substantial harm to consumers, including those located in noncontiguous States and Pacific territories.

The President directed the Secretary of Commerce to issue a License Exception, authorizing exports of TAPS oil, subject to certain conditions designed to preserve the environment.

This final rule amends part 754 of the Export Administration Regulations (EAR) by establishing a new License Exception TAPS. License Exception TAPS authorizes exports of oil transported over right-of-way granted pursuant to section 203 of the Trans-Alaska Pipeline Authorization Act (42 U.S.C. 1652) provided that the transaction meets the following conditions:

(1) The TAPS oil is transported by a vessel documented under the laws of the United States and owned by a citizen of the United States (in accordance with section 2 of the Shipping Act, 1916 (46 U.S.C. app. 802));

(2) All tankers involved in the TAPS oil export trade use the same route that they do for shipments to Hawaii until they reach a point 300 miles due south of Cape Hinchinbrook Light and then turn toward Asian destinations. After reaching that point, tankers in the TAPS oil export trade must remain outside of the 200 nautical mile Exclusive Economic Zone, as defined in 16 U.S.C. 1802(6). Tankers returning from foreign ports to Valdez, Alaska must abide by the same restrictions, in reverse, on their return route. This condition shall not be construed to limit any statutory, treaty or Common Law rights and duties imposed upon and enjoyed by tankers in the TAPS oil export trade, including, but not limited to, *force majeure* and maritime search and rescue rules;

(3) The owner or operator of a tanker exporting TAPS oil shall:

(a) Adopt a mandatory program of deep water ballast exchange (i.e., at least 2,000 meters water depth). Exceptions can be made at the discretion of the captain only in order to ensure the safety of the vessel and crew. Specified records shall be maintained and made available for audit by government officials.

(b) Be equipped with satellite-based communications systems that will enable the Coast Guard independently to determine the tanker's location;

(c) Maintain a Critical Area Inspection Plan for each tanker in the TAPS oil export trade in accordance with the U.S. Coast Guard's Navigation and Inspection Circular No. 15–91 as amended, which shall include an annual internal survey of the vessel's cargo block tanks; and

(4) The exporter files with BXA a Shipper's Export Declaration covering the export not later than 21 days after the export has occurred.

This final rule also makes other conforming changes in the short supply provisions of the EAR by revising part 754 concerning TAPS oil exports, the export clearance provisions of part 758 regarding the requirement to submit the Shippers' Export Declaration (SED) to the Bureau of Export Administration, and the recordkeeping requirements of part 762.

The Export Administration Regulations (EAR) have been totally amended by an interim rule published on March 25, 1996 (61 FR 12714), which provides for a transition period within which exporters can take advantage of both the old rules and the new rules until November 1, 1996. This rule permits exports of TAPS oil pursuant to a License Exception. Exporters can make exports of TAPS oil under this exception as of the effective date of this rule. Accordingly, the old rule is not being revised.

Rulemaking Requirements

1. This final rule has been determined to be significant for the purpose of Executive Order 12866.

2. Notwithstanding any other provision of the law, no person is required to respond to, nor shall any person be subject to a penalty for failure to comply with a collection of information, subject to the requirements of the Paperwork Reduction Act, unless that collection of information displays a currently valid Office of Management and Budget Control Number. This rule contains a collection of information subject to the Paperwork Reduction Act, which is cleared by the Office of Management and Budget under existing OMB Control Number 0694–0027. The public reporting burdens for the new collections of information are estimated to range between 5 and 10 minutes for the Shipper's Export Declaration requirement, and 30 minutes per voyage for the Ballast Water Exchange collection. These estimates include the time for reviewing instructions, searching existing data sources, gathering and maintaining the data needed, and completing and reviewing the collections of information. Send comments regarding these burden estimates or any other aspect of these collections of information, including suggestions for reducing the burden, to Bernard Kritzer, Office of Chemical and Biological Controls and Treaty Compliance, Bureau of Export Administration, Department of Commerce, Room 2705, 14th Street and Pennsylvania Avenue, N.W., Washington, D.C. 20230.

3. This rule does not contain policies with Federalism implications sufficient to warrant preparation of a Federalism assessment under Executive Order 12612.

4. This rule is being issued without notice of proposed rulemaking and opportunity for comment because Public Law 104–58: (1) provides that the administrative action under this Act is

not subject to sections 551 and 553–559 of the Administrative Procedures Act (5 U.S.C. 551, 553–559); and (2) requires these regulations to be issued within 30 days of the President's national interest determination.

5. Under 8 U.S.C. 808(2), there is good cause that notice and public procedure thereon are unnecessary and contrary to the public interest. Notice and public procedure are unnecessary because Public Law 104–58 exempts rulemaking under this Act from the notice and comment requirements of the Administrative Procedures Act and requires regulations to be issued within 30 days of the President's national interest determination. Notice and public procedure are contrary to the public interest because they would delay allowing the exports that the President, as authorized by Public Law 104–58, has determined are in the national interest.

List of Subjects

15 CFR Part 754

Exports, Foreign trade, Forests and forest products, Petroleum, Reporting and recordkeeping requirements.

15 CFR Part 758

Administrative practice and procedure, Exports, Foreign trade, Reporting and recordkeeping requirements.

15 CFR Part 762

Administrative practice and procedure, Business and industry, Confidential business information, Exports, Foreign trade, Reporting and recordkeeping requirements.

1. The authority citation for 15 CFR part 754 continues to read as follows:

Authority: 50 U.S.C. app. 2401 *et seq.;* 50 U.S.C. 1701 *et seq.;* 10 U.S.C. 7420; 10 U.S.C. 7430(e); Sec. 201, Pub. L. 104–58, 109 Stat. 557 (30 U.S.C. 185(s)); 30 U.S.C. 185(u); 42 U.S.C. 6212; 43 U.S.C. 1354; 46 U.S.C. app. 466c; E.O. 12924, 59 FR 43437, 3 CFR, 1994 Comp., p. 917; Notice of August 15, 1995 (60 FR 42767, August 17, 1995).

2. The authority citation for 15 CFR part 758 continues to read as follows:

Authority: 50 U.S.C. app. 2401 *et seq.;* 50 U.S.C. 1701 *et seq.;* E.O. 12924, 59 FR 43437, 3 CFR, 1994 Comp., p. 917; Notice of August 15, 1995 (60 FR 42767, August 17, 1995).

3. The authority citation for 15 CFR part 762 continues to read as follows:

Authority: 50 U.S.C. app. 2401 *et seq.;* 50 U.S.C. 1701 *et seq.;* E.O. 12924, 59 FR 43437, 3 CFR, 1994 Comp., p. 917; Notice of August 15, 1995 (60 FR 42767, August 17, 1995).

PART 754—[AMENDED]

4. In § 754.2 the following changes are made:

a. in paragraph (a), the phrase ''Reserves paragraph (i) of this section for a License Exception for certain shipments of samples.'' is revised to read ''Reserves, paragraph (i) of this section for a License Exception for certain shipments of samples, and paragraph (j) of this section for a License Exception for exports of oil transported by pipeline over right-of-way granted pursuant to section 203 of the Trans-Alaska Pipeline Authorization Act (43 U.S.C. 1652).''.

b. paragraph (c)(1)(i) is amended by adding the following sentence at the end: ''The President made a determination on April 28, 1996.''; and

c. a new paragraph (j) is added to read as follows:

§ 754.2 Crude oil.

* * * * *

(j) *License Exception for exports of TAPS Crude Oil.* (1) License Exception TAPS may be used to export oil transported over right-of-way granted pursuant to section 203 of the Trans-Alaska Pipeline Authorization Act (TAPS), provided the following conditions are met:

(i) The TAPS oil is transported by a vessel documented under the laws of the United States and owned by a citizen of the United States (in accordance with section 2 of the Shipping Act, 1916 (46 U.S.C. app. 802));

(ii) All tankers involved in the TAPS export trade use the same route that they do for shipments to Hawaii until they reach a point 300 miles due south of Cape Hinchinbrook Light and then turn toward Asian destinations. After reaching that point, tankers in the TAPS oil export trade must remain outside of the 200 nautical mile Exclusive Economic Zone, as defined in 16 U.S.C. 1802(6). Tankers returning from foreign ports to Valdez, Alaska must abide by the same restrictions, in reverse, on their return route. This condition shall not be construed to limit any statutory, treaty or Common Law rights and duties imposed upon and enjoyed by tankers in the TAPS oil export trade, including, but not limited to, *force majeure* and maritime search and rescue rules; and

(iii) The owner or operator of a tanker exporting TAPS oil shall:

(A) Adopt a mandatory program of deep water ballast exchange (i.e., at least 2,000 meters water depth). Exceptions can be made at the discretion of the captain only in order to ensure the safety of the vessel and crew. Records must be maintained in accordance with paragraph (j)(3) of this section.

(B) Be equipped with satellite-based communications systems that will enable the Coast Guard independently to determine the tanker's location; and

(C) Maintain a Critical Area Inspection Plan for each tanker in the TAPS oil export trade in accordance with the U.S. Coast Guard's Navigation and Inspection Circular No. 15–91 as amended, which shall include an annual internal survey of the vessel's cargo block tanks.

(2) *Shipper's Export Declaration.* In addition to the requirements of paragraph (j)(1) of this section, for each export under License Exceptions TAPS, the exporter must file with BXA a Shipper's Export Declaration (SED) covering the export not later than 21 days after the export has occurred. The SED shall be sent to the following address: Manager, Short Supply Program, Department of Commerce, Office of Chemical and Biological Controls and Treaty Compliance, Bureau of Export Administration, Room 2075, Washington, D.C. 20230.

(3) *Recordkeeping requirements for deep water ballast exchange.* (i) As required by paragraph (j)(1)(iii)(A) of this section, the master of each vessel carrying TAPS oil under the provisions of this section shall keep records that include the following information, and provide such information to the Captain of the Port (COTP), U.S. Coast Guard, upon request:

(A) The vessel's name, port of registry, and official number or call sign;

(B) The name of the vessel's owner(s);

(C) Whether ballast water is being carried;

(D) The original location and salinity, if known, of ballast water taken on, before an exchange;

(E) The location, date, and time of any ballast water exchange; and

(F) The signature of the master attesting to the accuracy of the information provided and certifying compliance with the requirements of this paragraph.

(ii) The COTP or other appropriate federal agency representatives may take samples of ballast water to assess the compliance with, and the effectiveness of, the requirements of paragraph (j)(3)(i) of this section.

5. Section 758.3 is amended by revising paragraph (d)(2) that was formerly reserved to read as follows:

§ 758.3 Shipper's Export Declaration (SED).

(d) * * *

(2) You are required under the provisions of § 754.2(j)(2) of the EAR.

PART 762—[AMENDED]

6. Section 762.2 is amended by:

a. Redesignating paragraphs (b)(26) through (b)(34) as (b)(27) through (b)(35) respectively; and

b. adding a new paragraph (b)(26).

§ 762.2 Records to be retained.

* * * * *

(b) * * *

(26) Section 754.2(j)(3), Recordkeeping requirements for deep water ballast exchange.

* * * * *

Dated: May 28, 1996.

Iain S. Baird,

Deputy Assistant Secretary for Export Administration.

[FR Doc. 96–13708 Filed 5–28–96; 2:33 pm]

BILLING CODE 3510–DT–P

DEPARTMENT OF THE TREASURY

Internal Revenue Service

26 CFR Part 1

[TD 8673]

RIN 1545–AM01

Enterprise Zone Facility Bonds

AGENCY: Internal Revenue Service (IRS), Treasury.

ACTION: Final regulations.

SUMMARY: This document contains final regulations relating to enterprise zone facility bonds issued by State and local governments. These regulations reflect changes to the law made by the Omnibus Budget Reconciliation Act of 1993. These regulations affect issuers of enterprise zone facility bonds.

EFFECTIVE DATE: These regulations are effective May 31, 1996.

For dates of applicability of these regulations to enterprise zone facility bond issues, see § 1.1394–1(q) of these regulations.

FOR FURTHER INFORMATION CONTACT: Loretta J. Finger, (202) 622–3980 (not a toll-free number).

SUPPLEMENTARY INFORMATION:

Background

On December 30, 1994, proposed regulations (FI–72–88) were published in the Federal Register (59 FR 67658) to provide guidance under sections 141 (relating to private activity bonds and to qualified bonds), 145 (relating to qualified 501(c)(3) bonds), 148 (relating to arbitrage), 150 (relating to change of use), and 1394 (relating to enterprise zone facility bonds). On June 8, 1995, the IRS held a public hearing on the proposed regulations. Written comments responding to the proposed regulations were received.

This Treasury decision addresses the issues relating to enterprise zone facility bonds. Later guidance will be published relating to sections 141, 145, 148, and 150. After consideration of all the comments, the proposed regulations under section 1394 (relating to enterprise zone facility bonds) are adopted as revised by this Treasury decision. The principal revisions to the proposed regulations under section 1394 are discussed below.

Explanation of Provisions

Section 1394 applies to bonds issued to provide enterprise zone facilities in both empowerment zones and enterprise communities (zones).

A. Period of Compliance

The proposed regulations in general require compliance with the requirements applicable to enterprise zone facility bonds throughout the term of the enterprise zone facility bonds. The proposed regulations provide two exceptions to this general rule: (i) A business that is first established in connection with the issuance of enterprise zone facility bonds does not need to meet the requirements of an enterprise zone business and enterprise zone property until the ''testing date,'' which is the later of one year after the issue date or one year after the date on which the financed property is placed in service, and (ii) the issuer and principal user of the facility are permitted a one-year period to cure noncompliance.

The final regulations modify the general rule to require compliance with the requirements applicable to enterprise zone facility bonds throughout the greater of (i) the remainder of the period during which the zone designation is in effect under section 1391 (zone designation period), and (ii) the period that ends on the weighted average maturity date of the enterprise zone facility bonds. The final regulations also provide that, in general, compliance with the requirements applicable to enterprise zone facility bonds is not required after the date on which the last of the enterprise zone facility bonds of the issue cease to be outstanding.

1. Start of Compliance Period

Commentators requested that the testing date provisions be extended to all businesses, not just start-up businesses. Commentators also suggested lengthening the start-up period. The final regulations follow the recommendation to expand the testing date provisions to all issuers and principal users of property financed with enterprise zone facility bonds if the issuer and the principal user reasonably expect that the requirements will be met by the testing date and proceed with due diligence to comply with the requirements. The start-up period is increased to the later of 18 months after the issue date or 18 months after the date on which the financed property is placed in service.

2. Compliance Period for Certain Requirements

Commentators suggested that compliance with the requirements for an enterprise zone business should be based only on reasonable expectations on the issue date. Commentators suggested that, alternatively, the required compliance period should be reduced to either (i) three years (similar to the test period for qualified small issue manufacturing bonds), or (ii) the remainder of the zone designation period.

Issuers and principal users should be required to meet the requirements applicable to enterprise zone facility bonds for a meaningful period of time in order to further the goals of economic development in the zones. Therefore, for purposes of meeting the requirements applicable to enterprise zone facility bonds, the final regulations in general require issuers and principal users of financed property to meet the requirements throughout the greater of (i) the remainder of the zone designation period, and (ii) the period that ends on the weighted average maturity date of the enterprise zone facility bonds.

While compliance is generally not required after the enterprise zone facility bonds are retired, the final regulations do require issuers and principal users to meet the requirements of an enterprise zone business and enterprise zone property for a minimum compliance period of at least three years after the initial testing date. The final regulations permit the issuer to identify an alternative initial testing date. This alternative initial testing date is a date after the issue date of the enterprise zone facility bonds and prior to the initial testing date that would have been otherwise determined under the final regulations.

Principal users are subject to the change in use penalty of section 1394(e) throughout the greater of (i) the remainder of the zone designation period, and (ii) the period that ends on the weighted average maturity date of the enterprise zone facility bonds.

3. Measurement of Compliance

The proposed regulations provide guidance on meeting the enterprise zone business definitions. Commentators pointed out several difficulties in meeting the tests in the proposed regulations and in curing noncompliance within a one-year period. Commentators also asked for guidance on how part-time employees are to be treated for the 35 percent resident employee requirement.

In general, each of the enterprise zone business requirements applies over taxable year periods. The beginning and end of the period of required compliance, however, may not correspond to the beginning and ending dates of the principal user's taxable year. The proposed regulations do not address the treatment of a taxable year only a part of which falls in a required compliance period. The final regulations provide that a taxable year is disregarded if the part of the year that falls in a required compliance period does not exceed 90 days.

Although the final regulations generally require annual compliance for the requirements under sections 1397B and 1397C, the final regulations allow a five-year averaging, taking into account only immediately preceding years going back to the taxable year that includes the initial testing date. The requirements under sections 1397B and 1397C include requirements relating to location of performance of employee services, location of tangible and intangible property, source of gross income from the active conduct of business, and the residence of employees. The averaging approach permits principal users who exceed the requirements to provide a cushion for future unanticipated noncompliance (for example, a non-recurring extraordinary payment for services performed outside the zone).

The final regulations allow the 35 percent resident employee requirement to be met on any reasonable basis (for example, on a per-employee basis or on the basis of employee actual work hours). For purposes of the per-employee fraction, employees working less than 15 hours a week are not included in the numerator or the denominator. The principal user must consistently apply the method to determine compliance with the 35 percent resident employee requirement throughout the required compliance period.

The final regulations also provide that a zone employee who moves out of the zone may continue to be treated as a resident of the zone, provided that employee was a bona fide resident of the zone, that employee continues to perform services for the principal user in an enterprise zone business in the zone and substantially all of those services are performed in the zone, and the principal user hires a resident of the zone for the next available comparable (or lesser) position.

The final regulations reduce the ''substantially all'' requirement for purposes of various tests under sections 1397B and 1397C from 90 percent to 85 percent.

B. Qualified Zone Property Definition

The proposed regulations provide that property that has been abandoned for more than one year meets the original use requirement. The final regulations provide that if real property is vacant for at least a one-year period including the date of zone designation, use prior to that period is disregarded for purposes of determining original use.

C. Other Rules

Commentators requested guidance on the appropriate method for treating activities within the zone as though they constituted a separately incorporated business for purposes of the enterprise zone business test.

The final regulations allow a business to treat its activities within a zone as part of a separately incorporated business if it allocates income and activities attributable to the business within the zone using a reasonable allocation method and has evidence of its allocations sufficient to establish compliance with the various requirements.

D. Principal User

The proposed regulations do not address the requirement that ''the principal user'' of the enterprise zone facility bond proceeds be an enterprise zone business. Commentators suggested that principal user generally be defined in the same manner as in the regulations applicable to qualified small issue bonds and qualified 501(c)(3) bonds, which relate to use of bond proceeds by ''any'' principal user, but without applying the definition to customers. One commentator (relying on the definition of a qualifying business) suggested that financing for commercial real estate owned by a business that is not an enterprise zone business should be permitted, so long as 50 percent of the gross rental income comes from lessees that are enterprise zone businesses.

The final regulations provide that an owner of financed property is the principal user except that, in the case of commercial real estate, the lessee may be treated as the principal user if the rental of the property is a qualified business under section 1397B(d)(2).

Special Analyses

It has been determined that this Treasury decision is not a significant regulatory action as defined in EO 12866. Therefore, a regulatory assessment is not required. It also has been determined that section 553(b) of the Administrative Procedure Act (5 U.S.C. chapter 5) and the Regulatory Flexibility Act (5 U.S.C. chapter 6) do not apply to these regulations, and, therefore, a Regulatory Flexibility Analysis is not required. Pursuant to section 7805(f) of the Internal Revenue Code, the notice of proposed rulemaking preceding these regulations was submitted to the Small Business Administration for comment on its impact on small business.

Drafting Information. The principal author of these regulations is Loretta J. Finger, Office of Assistant Chief Counsel (Financial Institutions and Products). However, other personnel from the IRS and Treasury Department participated in their development.

List of Subjects in 26 CFR Part 1

Income taxes, Reporting and recordkeeping requirements.

Adoption of Amendments to the Regulations

Accordingly, 26 CFR part 1 is amended as follows:

PART 1—INCOME TAXES

Paragraph 1. The authority citation for part 1 is amended by adding an entry in numerical order to read as follows:

Authority: 26 U.S.C. 7805 * * *

Section 1.1394–1 also issued under 26 U.S.C. 1397D.

Par. 2. Sections 1.1394–0 and 1.1394–1 are added under the undesignated centerheading ''DEFINITIONS; SPECIAL RULES'' to read as follows:

§ 1.1394–0 Table of contents.

This section lists the major paragraph headings contained in § 1.1394–1.

§ 1.1394–1 Enterprise zone facility bonds.

(a) Scope.
(b) Period of compliance.
(1) In general.
(2) Compliance after an issue is retired.
(3) Deemed compliance.
(c) Special rules for requirements of sections 1397B and 1397C.
(1) Start of compliance period.
(2) Compliance period for certain prohibited activities.
(3) Minimum compliance period.
(4) Initial testing date.

(d) Testing on an average basis.
(e) Resident employee requirements.
(1) Determination of employee status.
(2) Employee treated as zone resident.
(3) Resident employee percentage.
(f) Application to pooled financing bond and loan recycling programs.
(g) Limitation on amount of bonds.
(1) Determination of outstanding amount.
(2) Pooled financing bond programs.
(h) Original use requirement for purposes of qualified zone property.
(i) Land.
(j) Principal user.
(1) In general.
(2) Rental of real property.
(3) Pooled financing bond program.
(k) Treatment as separately incorporated business.
(l) Substantially all.
(m) Application of sections 142 and 146 through 150.
(1) In general.
(2) Maturity limitation.
(3) Volume cap.
(4) Remedial actions.
(n) Continuing compliance and change of use penalties.
(1) In general.
(2) Coordination with deemed compliance provisions.
(3) Application to pooled financing bond and loan recycling programs.
(4) Section 150(b)(4) inapplicable.
(o) Refunding bonds.
(1) In general.
(2) Maturity limitation.
(p) Examples.
(q) Effective dates.
(1) In general.
(2) Elective retroactive application in whole.

§ 1.1394–1 Enterprise zone facility bonds.

(a) *Scope.* This section contains rules relating to tax-exempt bonds under section 1394 (enterprise zone facility bonds) to provide enterprise zone facilities in both empowerment zones and enterprise communities (zones). See sections 1394, 1397B, and 1397C for other rules and definitions.

(b) *Period of compliance*—(1) *In general.* Except as provided in paragraphs (b)(2) and (c) of this section, the requirements under sections 1394(a) and (b) applicable to enterprise zone facility bonds must be complied with throughout the greater of the following—

(i) The remainder of the period during which the zone designation is in effect under section 1391 (zone designation period); and

(ii) The period that ends on the weighted average maturity date of the enterprise zone facility bonds.

(2) *Compliance after an issue is retired.* Except as provided in paragraph (c)(3) of this section, the requirements applicable to enterprise zone facility bonds do not apply to an issue after the date on which no enterprise zone facility bonds of the issue are outstanding.

(3) *Deemed compliance*—(i) *General rule.* An issue is deemed to comply with the requirements of sections 1394(a) and (b) if—

(A) The issuer and the principal user in good faith attempt to meet the requirements of sections 1394(a) and (b) throughout the period of compliance required under this section; and

(B) Any failure to meet these requirements is corrected within a one-year period after the failure is first discovered.

(ii) *Exception.* The provisions of paragraph (b)(3)(i) of this section do not apply to the requirements of section 1397B(d)(5)(A) (relating to certain prohibited business activities).

(iii) *Good faith.* In order to satisfy the good faith requirement of paragraph (b)(3)(i)(A) of this section, the principal user must at least annually demonstrate to the issuer the principal user's monitoring of compliance with the requirements of sections 1394(a) and (b).

(c) *Special rules for requirements of sections 1397B and 1397C*—(1) *Start of compliance period.* Except as provided in paragraph (c)(2) of this section, the requirements of sections 1397B (relating to qualification as an enterprise zone business) and 1397C (relating to satisfaction of the rules for qualified zone property) do not apply prior to the *initial testing date* (as defined in paragraph (c)(4) of this section) if—

(i) The issuer and the principal user reasonably expect on the issue date of the enterprise zone facility bonds that those requirements will be met by the principal user on or before the initial testing date; and

(ii) The issuer and the principal user exercise due diligence to meet those requirements prior to the initial testing date.

(2) *Compliance period for certain prohibited activities.* The requirements of section 1397B(d)(5)(A) (relating to certain prohibited business activities) must be complied with throughout the term of the enterprise zone facility bonds.

(3) *Minimum compliance period.* The requirements of sections 1397B(b) or (c) and 1397C must be satisfied for a continuous period of at least three years after the initial testing date, notwithstanding that—

(i) The period of compliance required under paragraph (b)(1) of this section expires before the end of the three-year period; or

(ii) The enterprise zone facility bonds are retired before the end of the three-year period.

(4) *Initial testing date*—(i) *In general.* Except as otherwise provided in paragraph (c)(4)(ii) of this section, the initial testing date is the date that is 18 months after the later of the issue date of the enterprise zone facility bonds or the date on which the financed property is placed in service; provided, however, it is not later than—

(A) Three years after the issue date; or

(B) Five years after the issue date, if the issue finances a construction project for which both the issuer and a licensed architect or engineer certify on or before the issue date of the enterprise zone facility bonds that more than three years after the issue date is necessary to complete construction of the project.

(ii) *Alternative initial testing date.* If the issuer identifies as the initial testing date a date after the issue date of the enterprise zone facility bonds and prior to the initial testing date that would have been determined under paragraph (c)(4)(i) of this section, that earlier date is treated as the initial testing date.

(d) *Testing on an average basis.* Compliance with each of the requirements of section 1397B(b) or (c) is tested each taxable year. Compliance with any of the requirements may be tested on an average basis, taking into account up to four immediately preceding taxable years plus the current taxable year. The earliest taxable year that may be taken into account for purposes of the preceding sentence is the taxable year that includes the initial testing date. A taxable year is disregarded if the part of the taxable year that falls in a required compliance period does not exceed 90 days.

(e) *Resident employee requirements*—(1) *Determination of employee status.* For purposes of the requirement of section 1397B(b)(6) or (c)(5) that at least 35 percent of the employees are residents of the zone, the issuer and the principal user may rely on a certification, signed under penalties of perjury by the employee, provided—

(i) The certification provides to the principal user the address of the employee's principal residence;

(ii) The employee is required by the certification to notify the principal user of a change of the employee's principal residence; and

(iii) Neither the issuer nor the principal user has actual knowledge that the principal residence set forth in the certification is not the employee's principal residence.

(2) *Employee treated as zone resident.* If an issue fails to comply with the requirement of section 1397B(b)(6) or (c)(5) because an employee who initially resided in the zone moves out of the

zone, that employee is treated as still residing in the zone if—

(i) That employee was a bona fide resident of the zone at the time of the certification described in paragraph (e)(1) of this section;

(ii) That employee continues to perform services for the principal user in an enterprise zone business and substantially all of those services are performed in the zone; and

(iii) A resident of the zone meeting the requirements of section 1397B(b)(5) or (c)(4) is hired by the principal user for the next available comparable (or lesser) position.

(3) *Resident employee percentage.* For purposes of meeting the requirement of section 1397B(b)(6) or (c)(5) that at least 35 percent of the employees of an enterprise zone business are residents of a zone, paragraphs (e)(3)(i) and (ii) of this section apply.

(i) The term *employee* includes a self-employed individual within the meaning of section 401(c)(1).

(ii) The resident employee percentage is determined on any reasonable basis consistently applied throughout the period of compliance required under this section. The per-employee fraction (as defined in paragraph (e)(3)(ii)(A) of this section) or the employee actual work hour fraction (as defined in paragraph (e)(3)(ii)(B) of this section) are both reasonable methods.

(A) The term *per-employee fraction* means the fraction, the numerator of which is, during the taxable year, the number of employees who work at least 15 hours a week for the principal user, who reside in the zone, and who are employed for at least 90 days, and the denominator of which is, during the same taxable year, the aggregate number of all employees who work at least 15 hours a week for the principal user and who are employed for at least 90 days.

(B) The term *employee actual work hour fraction* means the fraction, the numerator of which is the aggregate total actual hours of work for the principal user of employees who reside in the zone during a taxable year, and the denominator of which is the aggregate total actual hours of work for the principal user of all employees during the same taxable year.

(f) *Application to pooled financing bond and loan recycling programs.* In the case of a pooled financing bond program described in paragraph (g)(2) of this section or a loan recycling program described in paragraph (m)(2)(ii) of this section, the requirements of paragraphs (b) through (e) of this section apply on a loan-by-loan basis. See also paragraphs (g)(2) (relating to limitation on amount of bonds), (m)(2) (relating to maturity limitations), (m)(3) (relating to volume cap), and (m)(4) (relating to remedial actions) of this section.

(g) *Limitation on amount of bonds*—(1) *Determination of outstanding amount.* Whether an issue satisfies the requirements of section 1394(c) (relating to the $3 million and $20 million aggregate limitations on the amount of outstanding enterprise zone facility bonds) is determined as of the issue date of that issue, based on the issue price of that issue and the adjusted issue price of outstanding enterprise zone facility bonds. Amounts of outstanding enterprise zone facility bonds allocable to any entity are determined under rules contained in section 144(a)(10)(C) and the underlying regulations. Thus, the definition of *principal user* for purposes of section 1394(c) is different from the definition of principal user for purposes of paragraph (j) of this section.

(2) *Pooled financing bond programs*—(i) *In general.* The limitations of section 1394(c) for an issue for a pooled financing bond program are determined with regard to the amount of the actual loans to enterprise zone businesses rather than the amount lent to *intermediary lenders* as defined in paragraph (g)(2)(ii) of this section. This paragraph (g)(2) applies only to the extent the proceeds of those enterprise zone facility bonds are loaned to one or more enterprise zone businesses within 42 months of the issue date of the enterprise zone facility bonds or are used to redeem enterprise zone facility bonds of the issue within that 42-month period.

(ii) *Pooled financing bond program defined.* For purposes of this section, *a pooled financing bond program* is a program in which the issuer of enterprise zone facility bonds, in order to provide loans to enterprise zone businesses, lends the proceeds of the enterprise zone facility bonds to a bank or similar intermediary (intermediary lender) which must then relend the proceeds to two or more enterprise zone businesses.

(h) *Original use requirement for purposes of qualified zone property.* In general, for purposes of section 1397C(a)(1)(B), the term *original use* means the first use to which the property is put within the zone. For purposes of section 1394, if property is vacant for at least a one-year period including the date of zone designation, use prior to that period is disregarded for purposes of determining original use. For this purpose, de minimis incidental uses of property, such as renting the side of a building for a billboard, are disregarded.

(i) *Land.* The determination of whether land is functionally related and subordinate to qualified zone property is made in a manner consistent with the rules for exempt facilities under section 142.

(j) *Principal user*—(1) *In general.* Except as provided in paragraph (j)(2) of this section, the term *principal user* means the owner of financed property.

(2) *Rental of real property*—(i) *A lessee as the principal user.* If an owner of real property financed with enterprise zone facility bonds is not an enterprise zone business within the meaning of section 1397B, but the rental of the property is a qualified business within the meaning of section 1397B(d)(2), the term *principal user* for purposes of sections 1394(b) and (e) means the lessee or lessees.

(ii) *Allocation of enterprise zone facility bonds.* If a lessee is the principal user of real property under paragraph (j)(2)(i) of this section, then proceeds of enterprise zone facility bonds may be allocated to expenditures for real property only to the extent of the property allocable to the lessee's leased space, including expenditures for common areas.

(3) *Pooled financing bond program.* An intermediary lender in a pooled financing bond program described in paragraph (g)(2) of this section is not treated as the principal user.

(k) *Treatment as separately incorporated business.* For purposes of section 1394(b)(3)(B), a trade or business may be treated as separately incorporated if allocations of income and activities attributable to the business conducted within the zone are made using a reasonable allocation method and if that trade or business has evidence of those allocations sufficient to establish compliance with the requirements of paragraphs (b) through (f) of this section. Whether an allocation method is reasonable will depend upon the facts and circumstances. An allocation method will not be considered to be reasonable unless the allocation method is applied consistently by the trade or business and is consistent with the purposes of section 1394.

(l) *Substantially all.* For purposes of sections 1397B and 1397C(a), the term *substantially all* means 85 percent.

(m) *Application of sections 142 and 146 through 150*—(1) *In general.* Except as provided in this paragraph (m), enterprise zone facility bonds are treated as exempt facility bonds that are described in section 142(a), and all regulations generally applicable to exempt facility bonds apply to enterprise zone facility bonds. For this

purpose, enterprise zone businesses are treated as meeting the public use requirement. Sections 147(c)(1)(A) (relating to limitations on financing the acquisition of land), 147(d) (relating to financing the acquisition of existing property), and 142(b)(2) (relating to limitations on financing office space) do not apply to enterprise zone facility bonds. See also paragraph (n)(4) of this section.

(2) *Maturity limitation*—(i) *Requirements.* An issue of enterprise zone facility bonds, the proceeds of which are to be used as part of a loan recycling program, satisfies the requirements of section 147(b) if—

(A) Each loan satisfies the requirements of section 147(b) (determined by treating each separate loan as a separate issue); and

(B) The term of the issue does not exceed 30 years.

(ii) *Loan recycling program defined.* A *loan recycling program* is a program in which—

(A) The issuer reasonably expects as of the issue date of the enterprise zone facility bonds that loan repayments from principal users will be used to make additional loans during the zone designation period;

(B) Repayments of principal on loans (including prepayments) received during the zone designation period are used within six months of the date of receipt either to make new loans to enterprise zone businesses or to redeem enterprise zone facility bonds that are part of the issue; and

(C) Repayments of principal on loans (including prepayments) received after the zone designation period are used to redeem enterprise zone facility bonds that are part of the issue within six months of the date of receipt.

(3) *Volume cap.* For purposes of applying section 146(f)(5)(A) (relating to elective carryforward of unused volume limitation), issuing enterprise zone facility bonds is a carryforward purpose.

(4) *Remedial actions.* In the case of a pooled financing bond program described in paragraph (g)(2) of this section or a loan recycling program described in paragraph (m)(2)(ii) of this section, if a loan fails to meet the requirements of paragraphs (b) through (f) of this section, within six months of noncompliance (after taking into account the deemed compliance provisions of paragraph (b)(3) of this section, if applicable), an amount equal to the outstanding loan principal must be prepaid and the issuer must—

(i) Reloan the amount of the prepayment; or

(ii) Use the prepayment to redeem an amount of outstanding enterprise zone facility bonds equal to the outstanding principal amount of the loan that no longer meets those requirements.

(n) *Continuing compliance and change of use penalties*—(1) *In general.* The penalty provisions of section 1394(e) apply throughout the period of compliance required under paragraph (b)(1) of this section.

(2) *Coordination with deemed compliance provisions.* Section 1394(e)(2) does not apply during any period during which the issue is deemed to comply with the requirements of section 1394 under the deemed compliance provisions of paragraph (b)(3) of this section.

(3) *Application to pooled financing bond and loan recycling programs.* In the case of a pooled financing bond program described in paragraph (g)(2) of this section or a loan recycling program described in paragraph (m)(2)(ii) of this section, section 1394(e) applies on a loan-by-loan basis.

(4) *Section 150(b)(4) inapplicable.* Section 150(b)(4) does not apply to enterprise zone facility bonds.

(o) *Refunding bonds*—(1) *In general.* An issue of bonds issued after the zone designation period to refund enterprise zone facility bonds (other than in an advance refunding) are treated as enterprise zone facility bonds if the refunding issue and the prior issue, if treated as a single combined issue, would meet all of the requirements for enterprise zone facility bonds, except the requirements in section 1394(c). For example, the compliance period described in paragraph (b)(1) of this section is calculated taking into account any extension of the weighted average maturity of the refunding issue compared to the remaining weighted average maturity of the prior issue. The proceeds of the refunding issue are allocated to the same expenditures and purpose investments as the prior issue.

(2) *Maturity limitation.* The maturity limitation of section 147(b) is applied to a refunding issue by taking into account the issuer's reasonable expectations about the economic life of the financed property as of the issue date of the prior issue and the actual weighted average maturity of the combined refunding issue and prior issue.

(p) *Examples.* The following examples illustrate paragraphs (a) through (o) of this section:

Example 1. Averaging of enterprise zone business requirements. City C issues enterprise zone facility bonds, the proceeds of which are loaned by C to Corporation B to finance the acquisition of equipment for its existing business located in a zone. On the issue date of the enterprise zone facility bonds, B meets all of the requirements of section 1397B(b), except that only 25% of B's employees reside in the zone. C and B reasonably expect on the issue date to meet all requirements of section 1397B(b) by the date that is 18 months after the equipment is placed in service (the initial testing date). In each of the first, second, and third taxable years after the initial testing date, 35%, 40% and 45%, respectively, of B's employees are zone residents. In the fourth year after the testing date, only 25% of B's employees are zone residents. B continues to meet the 35% resident employee requirement, because the average of zone resident employees for those four taxable years is approximately 36%. The percentage of zone residents employed by B before the initial testing date is not included in determining whether B continues to comply with the 35% resident employee requirement.

Example 2. Measurement of resident employee percentage. Authority D issues enterprise zone facility bonds, the proceeds of which are loaned to Sole Proprietor F to establish an accounting business in a zone. In the first year after the initial testing date, the staff working for F includes F, who works 40 hours per week and does not live in the zone, one employee who resides in the zone and works 40 hours per week, one employee who does not reside in the zone and works 20 hours per week, and one employee who does not reside in the zone and works 10 hours per week. F meets the 35% resident employee test by calculating the percentage on the basis of employee actual work hours as described in paragraph (e)(3)(ii)(B) of this section. If F uses the per-employee basis as described in paragraph (e)(3)(ii)(A) of this section to determine if the resident employee test is met, the percentage of employees who are zone residents on a per-employee basis is only 33% because F must exclude from the numerator and the denominator the employee who works only 10 hours per week. If F calculates the resident employee test as a percentage of employee actual work hours as described in paragraph (e)(3)(ii)(B) of this section in the first year, F must calculate the resident employee test as a percentage of employee actual work hours each year.

Example 3. Active conduct of business within the zone. State G issues enterprise zone facility bonds and loans the proceeds to Corporation H to finance the acquisition of equipment for H's mail order clothing business, which is located in a zone. H purchases the supplies for its clothing business from suppliers located both within and outside of the zone and expects that orders will be received both from customers who will reside or work within the zone and from others outside the zone. All orders are received and filled at, and are shipped from, H's clothing business located in the zone. H meets the requirement that at least 80% of its gross income is derived from the active conduct of business within the zone.

Example 4. Enterprise zone business definition. City J issues enterprise zone facility bonds, the proceeds of which are loaned to Partnership K to finance the acquisition of equipment for its printing operation located in the zone. All orders are taken and completed, and all billing and

accounting activities are performed, at the print shop located in the zone. K, on occasion, uses its equipment (including its trucks) and employees to deliver large print jobs to customers who reside outside of the zone. So long as K is able to establish that its trucks are used in the zone at least 85% of the time and its employees perform at least 85% of services for K in the zone, K meets the requirements of sections 1397B(b)(3) and (5).

Example 5. Treatment as a separately incorporated business. The facts are the same as in *Example 4* except that six years after the issue date of the enterprise zone facility bonds, K determines to expand its operations to a second location outside of the boundaries of the zone. Although the expansion would result in the failure of K to meet the tests of 1397B(b), K, using a reasonable allocation method, allocates income and activities to its operations within the zone and has evidence of these allocations sufficient to establish compliance with the requirements of paragraphs (b) through (f) of this section. The bonds will not fail to be enterprise zone facility bonds merely because of the expansion.

Example 6. Treatment of pooled financing bond programs. Authority L issues bonds in the aggregate principal amount of $5,000,000 and loans the proceeds to Bank M pursuant to a loans-to-lenders program. M does not meet the definition of enterprise zone business contained in section 1397B. Prior to the issue date of the bonds, L held a public hearing regarding issuance of the bonds for the loans-to-lenders program, describing the projects of identified borrowers to be financed initially with $4,000,000 of the proceeds of the bonds. The applicable elected representative of L approved issuance of the bonds subsequent to the public hearing. The loan agreement between L and M provides that the other proceeds of the bonds will be held by M and loaned to borrowers that qualify as enterprise zone businesses, following a public hearing and approval by the applicable elected representative of L of each loan by M to an enterprise zone business. None of the loans will be in principal amounts in excess of $3,000,000. The loans by M will otherwise meet the requirements of section 1394. The bonds will be enterprise zone facility bonds.

Example 7. Original use requirement for purposes of qualified zone property. City N issues enterprise zone facility bonds, the proceeds of which are loaned to Corporation P to finance the acquisition of equipment. P uses the proceeds after the zone designation date to purchase used equipment located outside of the zone and places the equipment in service at its location in the zone. Substantially all of the use of the equipment is in the zone and is in the active conduct of a qualified business by P. The equipment is treated as qualified enterprise zone property under section 1397C because P makes the first use of the property within the zone after the zone designation date.

Example 8. Principal user. State R issues enterprise zone facility bonds and loans the proceeds to Partnership S to finance the construction of a small shopping center to be located in a zone. S is in the business of commercial real estate. S is not an enterprise zone business, but has secured one anchor lessee, Corporation T, for the shopping center. T would qualify as an enterprise zone business. S will derive 60% of its gross rental income of the shopping center from T. S does not anticipate that the remaining rental income will come from enterprise zone businesses. T will occupy 60% of the total rentable space in the shopping center. S can use enterprise zone facility bond proceeds to finance the portion of the costs of the shopping center allocable to T (60%) because T is treated as the principal user of the enterprise zone facility bond proceeds.

Example 9. Remedial actions. State W issues pooled financing enterprise zone facility bonds, the proceeds of which will be loaned to several enterprise zone businesses in the two enterprise communities and one empowerment zone in W. Proceeds of the pooled financing bonds are loaned to Corporation X, an enterprise zone business, for a term of 10 years. Six years after the date of the loan, X expands its operations beyond the empowerment zone and is no longer able to meet the requirements of section 1394. X does not reasonably expect to be able to cure the noncompliance. The loan documents provide that X must prepay its loan in the event of noncompliance. W does not expect to be able to reloan the prepayment by X within six months of noncompliance. X's noncompliance will not affect the qualification of the pooled financing bonds as enterprise zone facility bonds if W uses the proceeds from the loan prepayment to redeem outstanding enterprise zone facility bonds within six months of noncompliance in an amount comparable to the outstanding amount of the loan immediately prior to prepayment. X will be denied an interest expense deduction for the interest accruing from the first day of the taxable year in which the noncompliance began.

(q) *Effective dates*—(1) *In general.* Except as otherwise provided in this section, the provisions of this section apply to all issues issued after July 30, 1996, and subject to section 1394.

(2) *Elective retroactive application in whole.* An issuer may apply the provisions of this section in whole, but not in part, to any issue that is outstanding on July 30, 1996, and is subject to section 1394.

Approved: May 22, 1996.

Margaret Milner Richardson,

Commissioner of Internal Revenue.

Leslie Samuels,

Assistant Secretary of the Treasury.

[FR Doc. 96–13718 Filed 5–30–96; 8:45 am]

BILLING CODE 4830–01–U

DEPARTMENT OF THE INTERIOR

Minerals Management Service

30 CFR Part 203

RIN 1010–AC13

Royalty Relief for Producing Leases and Certain Existing Leases in Deep Water

AGENCY: Minerals Management Service (MMS), Interior.

ACTION: Interim Rule and Information Gathering.

SUMMARY: This interim rule establishes conditions for granting royalty relief on producing leases through their conversion to Net Revenue Share (NRS) leases, provides for suspensions of royalty payments on certain deep-water leases issued as the result of a lease sale held before November 28, 1995, and defines the information required for a complete application for royalty relief.

DATES: This interim rule is effective July 1, 1996.

We will consider all comments we receive by July 30, 1996. We will begin review of comments at that time and may not fully consider comments we receive after July 30, 1996.

ADDRESSES: Mail or hand-carry comments to the Department of the Interior; Minerals Management Service; Mail Stop 4700; 381 Elden Street; Herndon, Virginia 22070–4817; Attention: Chief, Engineering and Standards Branch.

FOR FURTHER INFORMATION CONTACT: Dr. Marshall Rose, Economic Evaluation Branch, telephone (703) 787–1536.

SUPPLEMENTARY INFORMATION:

I. Objectives of Royalty Relief

Royalty relief can lead to increased production of natural gas and oil, creating profits for lessees and royalty and tax revenues for the government. By this rulemaking, the Secretary seeks to establish economic incentives to encourage Outer Continental Shelf (OCS) lessees to incur the expenses or make the capital investments necessary to maintain or increase production. To the extent possible for approved applications, we will reduce or suspend royalty payments to permit lessees to earn a reasonable return on their capital investment for projects involving new investment. For projects not involving new investment, we will provide relief sufficient to allow an operating profit in cases where expenses plus royalties exceed revenues.

The Secretary will implement these royalty relief provisions in conjunction

with his stewardship responsibilities for the sound management of public lands. This includes conservation of resources, obtaining a fair return to the public on OCS resources, and ensuring that all OCS development is safe and consistent with sound environmental standards.

II. Legislative Background

The Secretary has broad legislative authority to reduce royalty rates on OCS leases. The Outer Continental Shelf Lands Act (OCSLA), as amended, (43 U.S.C. 1337(a)(3)(A)) states:

''The Secretary may, in order to promote increased production on the lease area, through direct, secondary, or tertiary recovery means, reduce or eliminate any royalty or net profit share set forth in the lease for such area.''

This provision gives the Secretary authority to reduce royalties on producing leases upon application by a lessee. Leases may be in shallow or deep water and may be located in any area of the OCS. Relief must be applied for, justified, and granted on a case-by-case basis.

On November 28, 1995, President Clinton signed Public Law 104–58, which included the Deep Water Royalty Relief Act (DWRRA). Section 302 of the DWRRA amends the OCSLA authority to allow the Secretary to grant relief on both producing and nonproducing leases and on categories of leases, rather than only on a case-by-case basis, in order to promote development, increase production, or encourage marginal production on Gulf of Mexico leases lying west of 87 degrees, 30 minutes West longitude. This rulemaking does not include regulations to implement the expanded discretionary authority to grant royalty relief in 43 U.S.C. 1337(a)(3)(B). Regulations for that purpose may be included in a future rulemaking.

In addition, the DWRRA also contains three other major provisions related to leases issued as a result of sales held before and after the date of the DWRRA's enactment.

First, section 303 establishes a new bidding system that allows the Secretary to offer tracts with royalty suspensions for a period, volume, or value of production. On February 2, 1996, we published a final rule modifying the regulations for the bidding systems we use to offer OCS tracts for lease (61 FR 3800). Portions of that rule in 30 CFR 260.110(a)(7) address the new bidding system authorized by section 303 of the DWRRA.

Second, section 304 mandates that all tracts offered within 5 years of the date of enactment in water depths of 200 meters or more in the Gulf of Mexico west of 87 degrees, 30 minutes West longitude, must be offered under the new bidding system permitted by section 303. The Secretary must offer such tracts with a specified minimum royalty suspension volume based on water depth. We published an interim rule in the Federal Register on March 25, 1996 (61 FR 12022), specifying the terms under which the Secretary will make royalty suspensions available for new deep-water leases issued as the result of sales held after November 28, 1995.

Third, again in section 302, the DWRRA provides that ''new production,'' as defined in that Act, from a lease or unit in existence on the date of its enactment, and in water depths of 200 meters or greater in the Gulf of Mexico west of 87 degrees, 30 minutes West longitude, does not qualify for royalty suspensions if the Secretary determines that the new production would be economic in the absence of royalty relief. Otherwise, the Secretary must determine the volume of production on which no royalty would be due in order to make the new production economically viable. This determination must be made on a case-by-case basis.

For existing leases or units which had no royalty bearing production, other than test production, before November 28, 1995, and which qualify for relief under section 302, the following minimum volumes of production are not subject to the royalty obligation specified in the lease:

- 17.5 million barrels of oil equivalent (MMBOE) for leases in 200 to 400 meters of water,
- 52.5 MMBOE for leases in 400 to 800 meters of water, and
- 87.5 MMBOE for leases in more than 800 meters of water.

These leases may qualify for a larger suspension volume if they would not be economic at the minimum royalty suspension volume specified by the DWRRA.

We also may grant a royalty suspension volume for production resulting from lease development activities pursuant to a Development Operations Coordination Document (DOCD), or a supplement to an approved DOCD, approved by the Secretary after November 28, 1995, that would expand production significantly beyond the level anticipated in a prior DOCD. In this case, we will grant the royalty suspension volume that we determine to be necessary to make the new production from the proposed project economic.

III. The Need for an Interim Rule

The DWRRA requires the Secretary to issue implementing regulations within 180 days of enactment. We cannot conduct and complete the usual proposed notice and comment rulemaking process to implement this part of the DWRRA before the statutorily imposed May 28, 1996, deadline. However, because the public interest would be best served by meeting the deadline and by establishing rules for these provisions of the DWRRA as soon as practicable, we are issuing this interim rule.

Several factors, in combination, have prevented us from issuing comprehensive rules through the usual rulemaking process by the statutory deadline. The Department of the Interior was shut down from December 12, 1995, to January 8, 1996, due to the lack of funding. Subsequently, MMS offices in the Washington, DC area were closed again for several days because of the ''blizzard of '96.''

These closings consumed critical time that would have been used to conduct the planning and preparation necessary to define the issues involved and devise an orderly process for a comprehensive rulemaking that would allow for as much advance notice and meaningful public participation as possible within the statutory deadline. Because of the complexity of the issues involved in this rulemaking, we believe the public interest would not be served by severely abbreviating the notice and comment procedures of the rulemaking process to meet the May 28, 1996, deadline.

Therefore, we decided the public interest would be served best by instituting a multipart rulemaking to meet the statutory objectives and allow extensive and meaningful public participation, consistent with law.

As the first step, we promptly published an Advance Notice of Proposed Rulemaking (ANPR) in the Federal Register on February 23, 1996 (61 FR 6958), and announced our intent to develop comprehensive regulations implementing the DWRRA. The ANPR sought comments and recommendations to assist us in that process. The comment period did not close until April 8, 1996, leaving too little time for a meaningful proposed notice and comment rulemaking by May 28, 1996. We also conducted a public meeting in New Orleans on March 12 and 13, 1996, to discuss with interested members of the public the matters the ANPR addressed.

We published an interim rule in the Federal Register on March 25, 1996 (61 FR 12022), specifying the terms under

which we will make royalty suspensions available for new deep-water leases issued as a result of sales held after November 28, 1995.

As in the case of the interim rule for royalty suspensions for new deep-water leases, implementation of the DWRRA's provisions for existing leases by the Congressionally prescribed deadline is in the public interest. These provisions should be implemented promptly so that lessees may proceed with important investment decisions. Furthermore, as explained below, failure to issue implementing regulations by the prescribed deadline would create a legal uncertainty under which we might be required to grant royalty relief to one or more OCS projects that would not otherwise qualify. In that situation, there would be potential losses of hundreds of millions of dollars in Federal revenues.

The availability of royalty suspensions for new production from existing deep-water leases becomes an important factor in lessees' decisions about whether or not to proceed with development of oil and gas on their leases. However, lessees cannot adequately consider or accurately plan the potential economic benefits of royalty relief until we issue regulations establishing the procedures for granting a royalty suspension and defining the data and information required for a complete application. Respondents to the ANPR indicated their desire to have us make this information available to them as soon as possible.

Lessees are likely, therefore, to delay investment decisions until we have implementing regulations in place. These investments are important to the national and regional economies and any delay could adversely impact very important economic activity. Thus, it is in the public interest to proceed to issue an interim rule within the time frame mandated by Congress.

The establishment of interim regulations is also necessary so that lessees can make informed decisions about whether to proceed with lease development activities or allow their leases to expire. Our regulations (30 CFR 250.13) provide that lessees must engage in drilling, production or well-reworking activities in order to keep their leases in force beyond the primary term specified in the lease. If they do not, then in the absence of production after the primary term of the lease, their leases expire at the end of the primary term or 90 days after drilling activities cease.

Of the approximately 1,600 leases in deep water in the Central and Western Gulf of Mexico, 116 leases are nearing the end of their primary term. Lessees, aware that Congress was considering the enactment of royalty relief legislation, may have deferred taking action on their leases so they could properly account for such relief in calculating project economics.

However, lessees cannot make the necessary calculations until we issue implementing regulations. If we were to go through the usual rulemaking process, some leases could reach their expiration date before final rules are established. In these cases, some lessees may allow their leases to expire because they cannot determine whether or not their leases will qualify for a royalty suspension volume. We believe this situation contradicts the purpose of the DWRRA and does not serve the public interest.

Any further delay in issuing even interim rules may place some leases at a competitive disadvantage. Fields in deep water may consist of both new leases and leases issued as the result of a lease sale held prior to November 28, 1995. New leases automatically qualify for a royalty suspension volume. Our regulations (30 CFR 260.110(d)(6)) provide that in multiple lease fields, those new leases that first produce the royalty suspension volume are the ones that gain the royalty relief.

Therefore, operators of new leases may proceed with development activities as soon as possible with the certainty that they will receive a royalty suspension volume. Lessees of leases issued as the result of a lease sale held prior to November 28, 1995, must wait until rules are issued before they can determine if they qualify for relief. By going through the usual rulemaking process, lessees of new leases could gain an advantage over these lessees. We believe this to be unfair and that the public interest requires that, to the extent possible, we fully inform lessees and create a ''level playing field'' by issuing this interim rule.

Upon receipt of an application for royalty relief under section 302 of the DWRRA (43 U.S.C. 1337(a)(3)(C)), the Secretary must determine whether new production from the lease or unit is economic in the absence of royalty relief. If the new production is determined to be uneconomic, royalty payments may be suspended on the new production until the suspension volume specified in the DWRRA, or such greater volume as the Secretary determines is necessary to make the new production economically viable, is produced. If the Secretary does not make the determination within 180 days of receiving an application and finding that it is complete, the DWRRA mandates royalty suspension automatically, unless the evaluation period is extended by 30 days, or for longer than 30 days with the applicant's concurrence.

Delaying a rulemaking on this issue also raises a significant question of statutory interpretation as to when lessees may begin submitting applications for royalty relief. One possible interpretation is that they could submit applications for a royalty suspension volume under the DWRRA as soon as the Congressional deadline for the issuance of implementing regulations passed.

Under this interpretation, unless sound application requirements and suspension terms are established by rulemaking before lessees can begin submitting applications, some leases or units could receive automatic royalty suspensions that would otherwise not be granted. In such cases, the royalty relief would unnecessarily penalize the taxpayer and the Federal Treasury. These potential losses could amount to hundreds of millions of dollars. The issuance of an interim rule and associated guidelines will avoid potential problems regarding interpretation of the DWRRA's application provisions.

Thus, prudent public policy and the national interest dictate that we issue this interim rule, thereby avoiding the risk that, however unlikely, the aforementioned interpretation of the statute might prevail.

Issuance of this interim rule will not preclude opportunities for the public to comment on the issues addressed herein. We have considered the comments submitted in response to the ANPR and in the public meeting, and we invite comments on this interim rule. We will also hold another public meeting if there is significant public interest to do so. As with the interim rule on royalty relief for new deep-water leases, a final rulemaking would include the provisions covered by this interim rule. Based on comments received and experience with initial applications, we may make changes to the matters this interim rule addresses when we issue a final rule that implements all provisions of the DWRRA.

The following sections discuss the two types of royalty relief addressed by this interim rule: first, conversion of existing producing leases to NRS leases under the OCSLA's general royalty rate reduction authority; and second, granting of royalty suspension volumes for certain deep-water leases under the new OCSLA provisions added by the DWRRA.

IV. Net Revenue Share Leases

Over the years, we have received 19 applications for royalty rate reductions under the OCSLA statutory provision as implemented by regulations at 30 CFR 203.50. Of these, we approved 10 applications, we denied 7 applications, and we still have 2 applications under review. While this program has produced worthwhile results, our experience with it has led us to believe that its terms and conditions need clarification and restructuring. We also found that applicants needed more information on how to apply for relief, including the data that must be submitted for a complete application.

Accordingly on December 14, 1995, we issued interim ''Guidelines for the Application, Review, Approval, and Administration of the Royalty Relief Program.'' The guidelines were developed to provide industry with clear instructions about how to apply for royalty relief. The guidelines streamline and simplify our royalty relief application process.

This portion of the rulemaking supplements the guidelines with additional direction on the data and information required in applications and revises 30 CFR 203.50 to be consistent with this new approach.

Criteria and Basis for Relief

All active leases or units that are producing or that produced previously are eligible for royalty relief under this section.

Royalty relief will be granted to enable lessees of leases with inadequate revenues to continue production or to encourage lessees to make additional capital investment to expand production. As a condition of approval, an applicant must agree to convert its lease to an NRS lease. The NRS rates will be calculated to allow lessees a return on operating expenses or new capital, as appropriate, while ensuring protection of Federal revenue interests.

Applications

Lessees of eligible leases may apply for royalty relief to the appropriate MMS Regional Director. Applications should be prepared in accordance with the December 1995 guidelines, subsequent updates, and these regulations. The data and information required for a complete application depends on whether the applicant proposes a continuation or expansion of current production.

Applications from lessees of marginal leases with inadequate revenues to sustain production must include certain administrative information, justification for the relief sought, and an NRS economic viability supplemental report (§ 203.53(b) and § 203.55).

Applications from lessees of leases proposing an expansion of production that would be uneconomic without royalty relief must contain certain administrative information, justification for the relief sought, and four supplemental reports:

(1) NRS Economic Viability Report;

(2) Geological and Geophysical Report;

(3) Production Report; and

(4) Engineering Report.

The regulations specify the details of the required information at § 203.55. The format for submitting the required information is presented in the our guidelines.

Review and Evaluation Criteria

To qualify for relief, we must determine, based on the application information, that relief would increase ultimate recovery of reserves extending the productive life of the lease by at least 1 year. Projects that merely accelerate the rate of production do not qualify. This approach is consistent with the OCSLA mandate that royalty relief should ''promote increased production on the lease area.''

For leases with inadequate revenues to sustain production to qualify for relief, we must determine that:

(1) Federal royalty payments over the most recent 12-month period were at least 75 percent of net revenues; and

(2) Federal royalty payments are projected to take an increasing share of net revenues (§ 203.52(c)).

We believe that, under these conditions, production on most leases is likely to be terminated unless relief is available. Thus, to the extent that the relief provided keeps a lease in production, one can say that the relief promoted increased production.

For NRS applications proposing an investment to expand production, we will determine if the proposed project is economic in the absence of royalty relief. If development of the project would be economic, then we will deny the application. If development of the project would not be economic without royalty relief, then the royalty will be converted to a NRS rate sufficient to make the project economically viable, as described in the NRS Guidelines available in the appropriate Regional Office. In those instances where no amount of royalty relief would make the project economic, we will deny the application. We will not count sunk costs in making these determinations.

V. Pre-Enactment Deep-Water Leases

Definitions

As used in the interim rule:

Field means an area consisting of a single reservoir or multiple reservoirs all grouped on, or related to, the same general geological structural feature and/or stratigraphic trapping condition. There may be two or more reservoirs in a field that are separated vertically by intervening impervious strata, or laterally by local geologic barriers, or both.

Pre-enactment deep-water lease (PDWL) means an OCS lease issued as a result of a lease sale held before November 28, 1995. The lease must be in a water depth of at least 200 meters and in the Gulf of Mexico west of 87 degrees, 30 minutes West longitude.

Project to significantly expand production (PSEP) means a project proposed in an approved Supplemental DOCD that will result in an increase in ultimate recovery of resources from the field and that involves a substantial capital investment (e.g., the addition of a fixed-leg platform, subsea template and manifold, tension-leg platform, multiple well projects, etc.). The project must be on a PDWL.

Sunk costs means costs (as specified in § 203.55) of exploration, development, and production incurred after the date of first discovery on the field and prior to the date of application for royalty relief. Sunk costs also include the costs of the discovery well qualified as producible under 30 CFR 250.11.

These terms are defined in 30 CFR § 203.50.

Criteria for Consideration of Relief

We will consider an application for the suspension of royalty payments on a volume of new production from a lease if the lease meets three basic conditions:

- The lease must have been issued as a result of a lease sale held before November 28, 1995, the date of enactment of the DWRRA.
- The lease must be located in water depths of 200 meters or greater.
- The lease must encompass only whole blocks lying west of 87 degrees, 30 minutes West longitude in the Gulf of Mexico.

Units may apply if they include at least one lease that meets these conditions, but any royalty suspension will apply only to those leases in the unit that meet these conditions.

Basis for Granting Relief

Section 302(C) of the DWRRA states that an application may be made on the

basis of an individual lease or unit. The term ''unit'' is not defined in the DWRRA. A fundamental issue in implementing the DWRRA is: should royalty relief for leases or units be based on some geologic or economic unit, such as a field?

We faced the same issue when we published the interim rule for new leases on March 25, 1996 (61 FR 12022) which amended § 260.110 to implement the provisions of section 304 of the DWRRA. In that instance, new (i.e., ''eligible'') leases receive suspension volumes automatically, without demonstrating a need for the suspension to assure economic viability. We have structured this rule to apply the PDWL royalty suspension provisions consistently with the royalty suspension provisions for new leases. Accordingly, two principles established in that interim rule will apply to this rule too.

First, as set forth for new eligible leases in § 260.110(d), we will allow only one royalty suspension volume per new field (*i.e.*, a field not producing prior to November 28, 1995). We believe Congress added ''or unit'' to section 302 of the DWRRA to allow us to evaluate multi-lease fields. But, in recognition of the objections raised in response to the ANPR regarding the suggestion that we might compel unitization, we will require leases in multi-lease fields that are not unitized to submit a joint application, as discussed below.

We set forth the underlying justification for a field approach in the preamble to the interim rule establishing the royalty suspension regulations for new deep-water leases under section 304 of the DWRRA. Briefly, the minimum royalty suspension volumes which Congress set forth in the DWRRA were developed from technical analysis conducted to estimate the royalty suspension volumes needed for capital cost recovery in developing unproduced oil and gas fields at various water depths in the Gulf of Mexico. This helps explain the fact that the chief Congressional sponsor, Senator Johnston, expressly linked the royalty suspension volumes in the DWRRA to the cost of developing a field.

Senator Johnston explained that the legislation was intended only to provide incentives for drilling leases that would not otherwise be drilled and to bring new fields into production:

> It is only with respect to *those leases that would not otherwise be drilled, either existing or future leases, that this amendment would provide that incentive* * * * The Secretary of the Interior wanted the incentive to be sufficient but not too much. That took a lot of negotiating * * * [The legislation] should bring on at least two new fields with approximately 150 million barrels of oil equivalent from existing leases and *it significantly improves the economics of 10 to 12 possible and probable fields.* 141 Cong. Rec. S. 6731 (daily ed., May 16, 1995) [emphasis added].

This statement strongly indicates that the DWRRA legislation was not intended to provide each lease in deep water the full royalty suspension volume. Granting royalty suspensions on a lease basis could result in much more relief than necessary to bring new fields into production.

As a hypothetical example, assume a field in 600 meters of water (the minimum suspension volume associated with 600 meters of water is 52.5 MMBOE) consists of two leases. Assume that our evaluation of the application under the DWRRA determines that development of the field is uneconomic without a suspension of royalty and that a royalty suspension of 35 MMBOE is needed to make development of the field economically viable. Granting the royalty suspension volume called for in the DWRRA to each lease would result in a total royalty suspension volume of 105 MMBOE, three times the amount necessary to make development of the field economically viable.

Thus, to be faithful to the intent of the DWRRA legislation, the royalty suspension volumes should be applied on a field basis, rather than giving each individual lease a full royalty suspension volume.

Second, if a PDWL is part of a field where any current lease produced prior to November 28, 1995, it cannot receive a royalty suspension volume from that field (except that a royalty suspension may be granted for a lease that undertakes a significant expansion of production on a field that produced before November 28, 1995). Since those lessees who undertook the initial production from the field (and can be said to have taken the most risk) would not be eligible for a royalty suspension volume under the DWRRA, neither should the lessees of leases on that producing field that begin production after the DWRRA's enactment. Under these circumstances, Congress certainly recognized that it is not necessary to encourage production.

We will assign PDWL's to a field the same as described in the interim rule for new deep-water leases. That is, we will assign a lease to a field when a well on the lease qualifies as capable of producing in paying quantities under the regulations at 30 CFR 250.11. If a well does not qualify under the rule, we will assign the lease to a field when hydrocarbons are first produced from the lease or when the lease is allocated production under an approved unit agreement.

The definition of field is set forth in 30 CFR 203.50. The definition is based on geology. We issue the *OCS Operations Field Names Master List,* which lists all the tracts in each field on the Gulf of Mexico OCS each quarter, with monthly updates.

We recognize that lessees may occasionally disagree with our determination that a lease is part of a particular field. Lessees may appeal these designations to the Director in the same manner as bid rejections are appealed. To appeal a decision that a lease is part of a particular field, a lessee must file a written request to the Director within 15 days of when we designate the lease as part of a field. The Director's response to this request, either affirming or reversing the earlier decision, cannot be appealed further within the Department of the Interior.

The deepest water depth on a lease in a field at the time an approved application for a royalty suspension was submitted establishes the water depth for that field. The water depth of a lease is governed by the ''Royalty Suspension Areas'' maps which we publish prior to lease sales in areas where the deep-water royalty relief program applies. These maps are based on bathymetric data from the National Oceanic and Atmospheric Administration. For purposes of drawing the map, if the water depth contour crosses a block, we include that block in the deeper water category. We will use the version of that map that is in effect at the time the royalty suspension application is submitted to determine the water depth of the field.

Applications

Lessees may submit applications for royalty relief under the provisions of this interim rule to the MMS Regional Director, Gulf of Mexico Region. Lessees may submit applications for:

(1) A PDWL or unit in a field that did not produce (other than test production) prior to November 28, 1995; or

(2) A PDWL or unit proposing development in a supplemental DOCD approved after November 28, 1995, that will expand production significantly beyond the level anticipated in a prior DOCD.

Because we have not required DOCD's to show anticipated production, we have chosen to define significant expansion of production as any project that will result in an increase in ultimate recovery of resources from the field and that involves a substantial

capital investment (e.g., installation of a fixed-leg platform, subsea template and manifold, tension-leg platform, or multiple well projects).

The DWRRA directs applicants to provide information required for a ''complete application'' and directs the Secretary to define clearly the information required. This interim rule requires the submission of several reports as part of a complete application. The information required in the reports includes field geology and geophysics, project design, field development and production plan (including planned time that production will begin and rates of production), costs (projected and past, if any), and a discounted cash flow (DCF) analysis of the field development and production.

The Gulf of Mexico Regional Office will make guidelines available to all lessees. These guidelines contain detailed instructions on the specific information and data elements required for a complete application.

As specified in the interim rule at § 203.55(c), the applicant or the applicant's authorized representative must certify that all information submitted in the application is accurate and complete. The application must be accompanied by a report prepared by an independent certified public accountant (CPA) expressing an unqualified opinion on the accuracy of the historical financial information presented in the application. The applicant must make the independent CPA available to us to respond to questions which may arise regarding the evaluation of the historical information. This requirement does not prevent further review of the applicant's records which support the historical financial information included in the application.

In developing the information requirements for a complete application, we observe that much of the geologic and economic information to be provided by an applicant who holds a non-producing PDWL is, by its very nature, imprecise (i.e., estimated or projected). Thus, it is important to set information requirements that enable us to make the DWRRA determinations with reasonable certainty.

To reduce the uncertainty of the information, the application should be submitted as late in the development process as possible, though before production commences. By waiting until later in the development process, activities such as drilling of development wells and procurement of facilities will provide more reliable information about costs and potential future income.

We note that lessees would prefer to have a decision made about relief early in the life of the lease to help in project planning and in arranging financing. Lessees with leases on a field that could be economic with royalty relief want to know whether and how much relief they will receive before making substantial post-discovery investments on their leases. Thus, there is a trade-off between our need for reasonably complete information and the lessee's desire for an early decision.

Our decisions on this issue incorporate ideas developed during ongoing discussions of possible new types of regulatory approvals relating to the development of deep-water oil and gas leases. A reasonably clear point in the OCS lease development process exists when detailed engineering and design activities necessary for the development of discovered resources have been completed, but capital investment for procurement and construction has not begun. The lessee has advanced the engineering, geology, and geophysics to a degree that more certainty exists in comparison to the earlier, exploration stage. Yet, the lessee has not made major financial commitments such as procuring facilities or drilling development wells.

Under the requirements for a complete application, the lessee must provide its design of production facilities needed for field development. The design of development and production facilities reflects the applicant's belief that the field merits development and qualifies for royalty relief. This approach avoids focusing on discoveries that have not yet been delineated and making major investments in the absence of knowledge about whether and to what extent the field qualifies for royalty relief and, if so, how large a royalty suspension volume we will grant.

A complete application must include an approved DOCD for a PDWL or unit or a supplemental DOCD for a PSEP. In joint applications, at least one lessee of a lease participating in the application must have an approved DOCD or an approved supplemental DOCD. The requirement for an approved DOCD for a complete application helps avoid submission of premature applications, since a DOCD covers the major system elements such as the platform and the development wells. A DOCD is not normally submitted to us until development design has progressed to a fairly final stage.

We considered requiring mandatory unitization of leases on a field if necessary to provide for the most efficient development of the field. However, in recognition of the responses to the ANPR in which virtually all lessees who provided comments opposed mandatory unitization, and since we continue to have the authority to compel the unitization of operations on OCS leases on a case-by-case basis, we have elected not to require the unitization of field operations as a necessary feature of a complete application for the suspension of royalty under the DWRRA.

Rather, we are requiring joint application procedures. In applying for royalty relief, all lessees on a field must submit a combined, joint application (§ 203.53(b)(3)(i)). If lessees do not want to share proprietary data with other lessees on the field, the proprietary geologic and geophysical data that is part of the joint application can be submitted separately and we will protect its confidentiality (§ 203.53(b)(3)(ii)). We will not deem the application complete until we receive all the required information for each lease on the field. If the application is subsequently denied, MMS will not disclose a lessee's proprietary data to other lessees in our explanation of our determinations.

The approach we have chosen to pursue for this interim rule represents a reasonable middle ground that protects the public interest while still allowing lessees flexibility of operation. That is, while a joint application that describes joint development of the field is required, lessees may develop their individual leases independently if they so choose.

Some lessees may be unwilling to provide the information necessary for a complete joint application even if it means foregoing an opportunity to share in the royalty suspension volume assigned to a field. In such cases, we will grant a good cause exception to the joint application requirement and will accept and evaluate an application from the remaining lessee(s) (§ 203.53(b)(3)(iii)). The application must include evidence of efforts to gain the cooperation of the non-participating lessee(s). While the noncooperating lessee(s) forfeits the right to receive a royalty suspension for the field that is the subject of the application under these DWRRA provisions, it may apply for royalty relief under other provisions.

Lessee(s) on a field may apply only once for a mandated royalty suspension volume for that field, except under the circumstances described below or for a PSEP (§ 203.53(b)(3)(iv)). The DWRRA specifically allows lessees to request a redetermination under certain limited circumstances, as discussed below. However, if unlimited applications were

permitted, there would be no need for the DWRRA's redetermination provisions. Therefore, we believe it is consistent with Congressional intent to allow only one application per field, except under the redetermination criteria or when we withdraw a prior approval of a royalty suspension volume, as discussed below.

Within 20 working days of the receipt of an application, we will determine whether it is complete (§ 203.53(c)(1)(i)). If the application is complete, we will notify the applicant and start to evaluate it. If the application is incomplete, we will provide the applicant an explanation of the additional data we need to make it complete.

The DWRRA provides that if we do not make our required determinations within 180 days after we receive a complete application (or 120 days in the case of a redetermination), we may extend the time period for making our determination or redetermination for 30 days, or for longer than 30 days if agreed to by the applicant (§ 203.53(c)(1)(ii)).

If we do not complete our required determinations in the prescribed time period, the field is granted the minimum royalty suspension volume automatically. In the case of a PSEP, the DWRRA specifies that no royalty is due on such production for a period of one year following the start of such production.

The interim rule specifies that the 180-day time period for our determination, or 120-day time period for redeterminations, begins when we have determined that the application is complete and so notify the applicant.

We view the evaluation process as one where we may interact with the applicant. If, during this process, we find that data or information in the application is unclear, inconclusive, or otherwise cannot be relied upon, we will notify the applicant to provide such new data or information as is needed to make the application complete and accurate. We will request that the 180- or 120-day time period be tolled from the time the applicant receives our notice until the needed information is provided. When the applicant supplies the needed information, we will restart the time period with the same number of days remaining for us to make our determinations as when the time was tolled. The alternative to tolling the clock is for us to reject the application because the data and information does not adequately support the determination we must make under the DWRRA.

Review and Evaluation Procedures

In evaluating applications for deep-water royalty relief, we will make the following determinations:

- Would the new production be economic without a royalty suspension; and
- Is there any royalty suspension volume that we could grant that would make the new production economic?

If the answer to the first determination is that production would not be economic without relief and the answer to the second is that there may be a royalty suspension volume that would make the new production economic, we will proceed to a third determination: what amount of relief should we grant, i.e., the minimum royalty suspension volume mandated in the DWRRA or a volume in excess of that minimum?

The OCSLA authorizes these determinations in section 8(a)(3)(C)(ii). First, the provision reads, ''the Secretary shall determine * * * whether new production from such lease or unit would be economic in the absence of the relief * * *'' Second, that same section mandates that the Secretary ''determine the volume of production from the lease or unit on which no royalties would be due in order to make such production economically viable * * *.'' If there is no amount of royalty relief which would make the new production economic, then there is no way the Secretary can calculate the ''volume of production from the lease or unit on which no royalties would be due in order to make such production economically viable * * *.'' Thus, our determination of whether there exists a royalty suspension volume that would make new production economic is necessary for the Secretary to proceed to a determination of a volume of royalty suspension that would make production economically viable.

If new production from a field or project is economic in the absence of royalty relief, the relief provisions of the DWRRA do not authorize relief and we will reject the application. If no amount of royalty relief would make a field (or project) economic, we will disapprove the application. In such a case, the royalty relief would not induce the lessee to develop the field or marginal project.

The DWRRA requires us to determine whether new production would be ''economic'' taking into consideration the risks of deep-water development and all costs associated with exploration, development, and production. However, the term ''economic'' is not defined in the DWRRA. For this interim rule, we have defined ''economic'' as a project or group of related projects, such as field-wide development, having a positive net present value as calculated with MMS-stipulated DCF techniques.

The DWRRA requires us to consider all costs of exploration, development, and production in determining whether a field is economic in the absence of royalty relief. In making this determination, we will include only those sunk costs incurred after the date of field discovery because of the difficulties in attributing to a particular field those sunk costs incurred before a discovery.

Similarly, we will not include sunk costs when we determine whether a field can be made economic with royalty relief or when we determine the amount of royalty suspension volume needed to make the new production economic. First, only prospective costs are relevant to determining the royalty suspension volume needed to make the new production economic. Second, the DWRRA does not state that ''all costs'' must be considered in determining the appropriate suspension volume.

This treatment of sunk costs applies only to fields that did not produce, other than test production, prior to the date the application for royalty suspension is submitted. We will not count any sunk costs where production commenced prior to the date the application is submitted or when the application is proposing a significant expansion of production. According to economic theory, such costs generally are not relevant to decisions about whether to continue producing from a developed field. Since the intent of the DWRRA is to bring new fields into production-not to ensure a rate of return on developed fields-we will not count sunk costs in such cases.

The guidelines provide more detailed information on costs, prices, and discount rates. In general, the applicant provides the cost data we use to make our determinations. Based on our experience in administering NRS royalty relief, we will not include some types of costs in the analysis, as specified in § 203.55(b). We will verify the costs reported and, where sunk costs are important, this verification may include an audit of those costs. The costs and the underlying geology and design data are given in ranges or with probability distributions, reflecting the uncertainties and risks of the field development.

We will provide applicants with the assumptions for oil and gas prices to use in the DCF analyses. We will develop future price assumptions after

considering long-term projections of oil and gas prices by major forecasters, such as (but not limited to) the Energy Information Administration, Data Resources Incorporated, and Wharton Econometrics. We will update these price forecasts periodically. These assumptions provide reasonable forecasts that all applicants can employ. Applicants may adjust prices for the expected quality of the resource, documenting these adjustments as discussed in our guidelines.

We will also specify a range of discount rates from which applicants will choose a particular rate. The reason for allowing a choice of discount rates is that projects differ in their risk characteristics, and further, operators might have different risk preferences reflected in their target rates of return. Our guidelines will set the range of discount rates for use in the DCF analyses. We may change the range periodically.

In determining the volume suspension needed to make the field economically viable, we will employ a similar DCF model and the same price and discount assumptions used to show whether royalty relief can make the field economic. We will also input the geological assessments, engineering designs, production scenarios and cost components included in the application, subject to our review and verification of their accuracy and efficiency. In cases where we find that assumptions other than those provided by the applicant are more appropriate, we reserve the right to make all necessary changes in the set of inputs.

In general, we have structured our determinations following the principle that the DWRRA aimed to give substantial, but not excessive, incentive to develop marginal fields. In this manner, we seek to avoid the errors of rejecting deserving applications or giving large amounts of volume suspension when they are not needed.

Note that being granted a royalty suspension volume on production from a PDWL under the regulations established by this rulemaking does not preclude a lessee from obtaining further relief under the pre-DWRRA provisions of the OCSLA, the expanded OCSLA royalty relief provisions created by the DWRRA, or under the significant expansion of production portion of the DWRRA.

Also, as noted above a lessee may apply only once for a royalty suspension volume for a given field under the DWRRA provisions, except as provided below.

Redeterminations

The DWRRA provides that an applicant may request a redetermination of the Secretary's findings prior to the start of new production if a significant change occurs in the factors upon which we based the original determination. We believe that the Congress established this requirement, in part, to place reasonable limits on the number and frequency of redetermination requests so the Secretary would not need significant new staff resources to administer the program.

Accordingly, we will accept an application for a redetermination only when:

(1) Changes in resource information (e.g., gross resources, quality, flow rates) are of sufficient magnitude that, had our evaluation of the original application included the new data, the results of our determinations would have been materially different. The new resource information must result from new exploration activity such as drilling a new well or acquiring new 3–D seismic data that did not exist at the time of the original application. A reinterpretation of existing data does not qualify as a significant change in resource information; or

(2) Average annual prices of oil and gas have fallen by 25 percent since the previous application. These averages are determined by:

(A) using daily closing prices for light sweet crude oil and natural gas on the New York Mercantile Exchange (NYMEX) over 12-month periods; and

(B) weighting the annual average prices by the volumes of oil and gas (in barrels of oil equivalent) identified in the most likely development and production scenario (required under § 203.55 and described in the guidelines) in the previous application for royalty relief. (See § 203.53(d)(1)(ii) for details.)

We are establishing this condition to avoid having economic projects appear uneconomic, and therefore qualify for a royalty suspension volume, due to what may only be a brief temporary downturn in prices. While smaller price changes can affect the economic viability of development, larger, sustained changes in underlying prices must occur before we would change the price scenarios used in evaluating applications. Further, a drop in oil prices should not trigger a potential redetermination for a project proposing to develop a 100 percent gas field or vice versa. Therefore, the weighted average price change is required; or

(3) Prior to starting construction of your project, estimated project development costs amount to more than 120 percent of the eligible development costs included for the most likely development scenario as set forth in the previous application.

Applicants requesting a redetermination must include a new complete application in accordance with the requirements of § 203.53(b) and § 203.55. We will evaluate the request to see if the applicant is eligible for a redetermination. If so, we will proceed to evaluate the application.

As with an original application for a royalty suspension, we have 20 working days to determine whether an application for a redetermination is complete. If the application is complete, we must evaluate the application within 120 days. We can extend this period for 30 days, or longer if agreed to by the applicant(s).

Withdrawal of Approvals and Changes in Material Fact

If we find that an applicant provided false historical information or intentionally inaccurate data that was material to us in granting royalty relief under this section, we will rescind our approval of that relief as of the date of the approval. The applicant must pay royalties and late payment interest determined under 30 U.S.C. 1721 and 30 CFR 218.54 on all volumes of production on which royalty was not paid. The lessee also may be subject to penalties under other provisions of law.

We further reserve the right to withdraw our approval of a royalty suspension if a change in material fact occurs that is significant enough to invalidate the basis on which we originally evaluated and approved the application. Material changes that will result in a withdrawal of an approved royalty suspension volume include:

(1) The lessee changes the type of development system proposed in the approved application. For example, the development proposal changes from a stand-alone platform, as proposed in the approved application, to a much less expensive subsea template and tie-back.

(2) Construction of the production system described in the application does not commence within 2 years of the date of application approval, notwithstanding any suspensions of operations.

(3) Actual development costs incurred prior to the commencement of production, other than test production, amount to less than 80 percent of the estimated development costs included for the most likely development and production scenario presented in the approved application.

We will use the pre-production report (§ 203.53(c)(4)) to determine whether the actual capital costs meet this threshold. As an incentive for efficient investment and to provide greater certainty at the time of the application, a portion of the originally granted royalty relief can be automatically retained. If the applicant informs us of the development cost discrepancy in the pre-production report, the applicant will be entitled to 50 percent of the approved royalty suspension volume with no further action required (see § 203.53(e)(3)(i)). If we discover the development cost discrepancy after production, other than test production, has started, approval of the royalty suspension volume will be retroactively withdrawn (see § 203.53(e)(3)(iii)).

However, if the royalty suspension volume resulted from a redetermination based on a change in capital costs, as discussed above, we will withdraw our approval of the application if actual development costs are less than 90 percent of the estimated development costs included in the most likely development and production scenario in the approved application, and the lessee will not be permitted to retain any of the approved royalty suspension volume (see § 203.53(e)(3)(ii)).

We considered other factors as grounds for withdrawal of our approval of an application, but we concluded that the factors discussed above were sufficient to protect the public interest.

The applicant may initiate a new application for a suspension volume when its previously approved royalty suspension volume is withdrawn for reasons other than the submission of false information or intentionally inaccurate data.

The material changes triggering a potential withdrawal of approval of the royalty suspension volume are at least partially at the discretion of the lessee(s) and the potential for a subsequent withdrawal of our approval for a royalty suspension should be considered by applicants when deciding to make changes of this nature.

Allocation Rules

Fields in deep water may consist of one or more leases, including leases issued as a result of sales held before and after November 28, 1995, and leases in different water depths. Therefore, to make royalty relief consistent with the DWRRA, we need to specify how the royalty suspension volume applies in many different circumstances. Accordingly, the following cases illustrate how the rule applies in determining eligibility for, and the volume of, royalty suspensions. (All cases assume that all eligible leases on a field participate in the joint application for a royalty suspension volume; the term ''eligible leases'' is defined in the interim rule for deep-water royalty relief on leases issued from sales after November 28, 1995 (61 FR 12022, 30 CFR 260.110)).

Case 1. If a field consists of a single PDWL and the application is approved, no royalty payment is required on production from the lease until that production equals the royalty suspension volume granted.

Case 2. If a field consists of more than one PDWL and the application is approved, payment of royalties on production from the PDWL's is suspended until their cumulative production equals the suspension volume granted. The royalty suspension volume for each lease equals each lease's actual production (or production allocated under an approved unit agreement) until cumulative production from the field equals the field's royalty suspension volume.

Case 3. If a PDWL or an eligible lease is added to a field that has been granted a royalty suspension volume under the regulation established by this rulemaking, the field's royalty suspension volume will not change. The additional lease may receive a royalty suspension volume only to the extent of its production before the cumulative production from the field equals the approved royalty suspension volume.

In this case, the added PDWL will not be required to submit the full application required of the original applicants. A full application is not necessary because we have already evaluated the field and set an appropriate royalty suspension volume. We see no need to reevaluate that determination. Accordingly, the operator of the PDWL can apply for relief using an abbreviated application available at the Gulf of Mexico OCS Regional Office.

Case 4. If the PDWL is part of a field that has a royalty suspension volume for eligible leases under § 260.110, the lessee(s) may apply for relief. If the application meets the economic and economic viability tests, all of the leases can share the royalty suspension volume until total cumulative production from the field attains the royalty suspension volume that is the greater of the volume established for the eligible leases under § 260.110 or the volume determined pursuant to the regulation established by this rulemaking.

Case 5. A lease may receive more than one royalty suspension volume. An application may be made for relief for a lease under the regulations established by this rulemaking for each field that includes the lease. Each field will receive a separate royalty suspension volume if it meets the evaluation criteria described below. An application also may be made for relief for a project that would result in a significant expansion of production, even if we have already granted a royalty suspension volume to the field that encompasses that project. For a PSEP, this is how the rule applies:

Case 6. If a PDWL is the only lease on the project and the application based on a significant expansion of production is approved, no royalty payment is due on the incremental production from the project until that production equals the royalty suspension volume granted.

Case 7. If the expansion of production project includes more than one lease and the application is approved, payment of royalties on incremental production from the project is suspended until the lessees' cumulative incremental production from the project equals the suspension volume granted. The royalty suspension volume for each lease equals each lease's actual production from the project until cumulative production equals the project's royalty suspension volume.

In all cases, the addition of a lease to a field that has an established royalty suspension volume will not change the field's royalty suspension volume, even if the added lease is in deeper water.

Other Issues

Appeals—Our determinations and redeterminations under 43 U.S.C. 1337(a)(3)(C) are final agency actions which are judicially reviewable under section 10(a) of the Administrative Procedure Act (5 U.S.C. 702). Requests for judicial review of a determination or redetermination under 43 U.S.C. 1337(a)(3)(C) must be filed within 30 days of our decision.

Gas-to-oil conversion factor—The royalty suspension volumes are measured in millions of barrels of oil equivalent. For the purposes of this rule, 5.62 thousand cubic feet of natural gas equal one barrel of oil equivalent, as measured at 15.025 pounds per square inch (psi) pressure, 60 degrees Fahrenheit, and fully saturated (§ 203.53(g)(5)). This is the conversion factor traditionally used in the Gulf of Mexico and is the same factor specified in § 260.110(d)(11) for calculating royalty suspension volumes for new leases.

Non-royalty bearing production—Under this rule, any lease-use production that otherwise is not subject to royalty does not count toward the royalty suspension volume.

Price escalation clause—In accordance with section 302, in any calendar year during which the arithmetic average of the daily closing prices on the NYMEX for light sweet crude oil exceeds $28.00 per barrel, adjusted for inflation as described below, any royalty relief we grant under the provisions of this rule for DWLP's and PSEP's is suspended and any production of oil is subject to royalties at the lease stipulated royalty rate. However, this production counts as part of the established royalty suspension volume. By January 31 of the year following the calendar year in which the price exceeded $28.00 per barrel, the lessee must pay the royalty due plus

interest in accordance with 30 U.S.C 1721 and 30 CFR 218.54, on any volume of oil produced during the previous year on which no royalties were paid.

In any year following a calendar year in which the arithmetic average of the daily closing prices on the NYMEX for light sweet crude oil exceeded $28.00 per barrel, as adjusted for inflation, the lessee must pay royalties on all the oil it produces that year. If, after the end of the year, the arithmetic average of the daily closing prices on the NYMEX for light sweet crude oil for that year was $28.00 per barrel or less, as adjusted for inflation, the lessee is entitled to a refund or credit, with interest, of royalties paid that year on any royalty suspension volume for oil production. Regulations for receiving refunds or credits are at 30 CFR part 230.

This rule similarly applies to natural gas. In any calendar year during which the arithmetic average of the daily closing prices on the NYMEX for natural gas exceeds $3.50 per million British thermal units (Btu's), adjusted for inflation as described below, any royalty relief we grant under the provisions of this rule for DWLP's and PSEP's is suspended and any production of gas is subject to royalties at the lease stipulated royalty rate. However, this production counts as part of the established royalty suspension volume. By January 31 of the year following the calendar year in which the price exceeded $3.50 per million Btu's, the lessee must pay the royalty due plus interest in accordance with 30 U.S.C 1721 and 30 CFR 218.54, on any volume of gas produced during the previous year on which no royalties were paid.

In any year following a calendar year in which the arithmetic average of the daily closing prices on the NYMEX for natural gas exceeded $3.50 per million Btu's, as adjusted for inflation, the lessee must pay royalties on all the gas it produces that year. If, after the end of the year, the arithmetic average of the daily closing prices on the NYMEX for natural gas for that year was $3.50 per million Btu's or less, as adjusted for inflation, the lessee is entitled to a refund or credit, with interest, of royalties paid that year on any royalty suspension volume for gas production. Regulations for receiving refunds or credits are at 30 CFR part 230.

To adjust for inflation, change the prices referred to above (i.e., $28.00 per barrel for light sweet crude and $3.50 per million Btu's for natural gas) during each calendar year after 1994 by the percentage, if any, by which the implicit price deflator for the gross domestic product changed during the preceding calendar year.

The particulars of this provision of the DWRRA are included at § 203.53(h)(6)–(8) of this rulemaking.

Termination of royalty suspension volumes—A royalty suspension will continue until the end of the month in which the cumulative production from the applicable leases in the field or project reaches the royalty suspension volume for the field or project. We will provide monthly production data to all lessees in the field or project. However, this data may not become available until shortly after production exceeds the royalty suspension volume. In such cases, royalties still will be due on the last day of the second month following the month in which cumulative production from the field or project reaches the royalty suspension volume. Any royalties paid late will be subject to interest pursuant to 30 CFR 218.54.

VI. Recovery of Costs

In accordance with Federal policy and statute, we will charge lessees applying for royalty relief under the provisions of the regulation promulgated by this rulemaking an amount which recovers our cost of processing their applications. The Administrative Procedure Act (31 U.S.C. 9701) and Office of Management and Budget Circular A–25 require that agencies recover their costs when they provide services that confer special benefits or privileges to identifiable non-Federal recipients. Processing of applications for royalty relief clearly falls within this mandate.

Furthermore, the collection of such fees is specifically authorized by the Omnibus Appropriations Bill (Pub. L. 104–134, 110 Stat. 1321, April 26, 1996). The statute provides: ''That beginning in fiscal year 1996 and thereafter, fees for royalty rate relief applications shall be established (and revised as needed) in Notices to Lessees, * * * for the costs of administering the royalty rate relief authorized by 43 U.S.C. 1337(a)(3).''

We estimate that our costs for processing NRS applications will range from $8,500 (continuation of production) to $22,500 (project involving capital expansion). For applications for deep-water royalty relief, we estimate that our costs will range from $27,500 to $50,000 depending on the number of leases involved and the complexity of the proposed development project. For some applications, we may find it necessary to audit the financial data submitted to make an adequate determination on the economics of the proposed development. We estimate that it will cost us up to $40,000 to conduct such an audit.

We will issue a Notice to Lessees (NTL) that will provide more detailed information on the amounts of royalty relief application processing costs and when and how applicants may make payments to us. We will revise the NTL periodically to reflect our cost experience and to provide other information helpful or necessary for the administration of this program.

VII. Administrative Matters

Executive Order (E.O.) 12866

The interim rule is significant due to novel policy issues arising out of legal mandates, and the Office of Management and Budget (OMB) has reviewed this rule. We will make a copy of this determination available on request.

We focused on impacts on royalty revenues of regulatory alternatives in determining the possible economic effects of implementing section 302 of the DWRRA. We assumed that there would not be significant impacts on labor and capital because, given current constraints on the availability of deep-water drilling rigs, companies active in these areas would make similar alternative investments in the absence of the DWRRA over the near term.

We analyzed two alternatives for implementing section 302. The approach in this interim rule (MMS approach) gives a single royalty suspension volume for each qualifying field. The alternative approach gives each individual lease or unit separate royalty suspension volumes, subject to the minimum volumes specified in the DWRRA.

Because the DWRRA instructs us to grant royalty relief only in situations that are uneconomic at the lease-stipulated royalty rate, the revenue effects are the additional royalties that may be collected from fields that would otherwise not be developed until a later time, if at all. We estimated these effects by extrapolating to all known deep-water fields the results of detailed analyses of 30 fields in the relevant water depths. The MMS approach generates up to an estimated $45 million per year in royalty revenue in peak years. The alternative approach frequently results in no royalty payments, and when such payments do occur, they would be less than the royalties received under the MMS approach. Thus, in both cases, the economic effects are less than $100 million annually.

We chose the approach embodied in this interim rule because:

- The DWRRA's primary author stated that he intended the DWRRA to

encourage production from new fields without providing too much relief;

• The MMS approach provides a substantial incentive for developing marginal fields in deep water while still ensuring a reasonable return to the Treasury;

• The minimum suspension volumes specified in the DWRRA were derived from an analysis of fields, not individual leases; and

• This rule needs to be consistent with the rules for royalty suspensions on deep-water tracts leased after November 28, 1995, in the same parts of the Gulf of Mexico so that all deep-water OCS lessees receive equitable treatment.

Regulatory Flexibility Act

This rule will not have a significant effect on small entities.

This rule establishes the terms and conditions for granting royalty relief under the provisions section 8(a)(3)(A) of the OCSLA and royalty suspension volumes under the DWRRA for certain deep-water OCS Gulf of Mexico leases that were issued as the result of a lease sale held prior to November 28, 1995.

The estimates of development costs for fields in the deep water of the Gulf of Mexico range from over $10 million to about $2 billion. We, therefore, concluded that, in general, the entities that engage in offshore oil and gas development and production activities are not small due to the technical and financial resources and the experience needed to safely conduct such activities.

Small entities who are likely to work in the deep waters of the OCS are primarily contractors who provide services such as catering or custodial services for manned facilities. This rule will impact these entities only to the degree that the royalty relief provided results in the drilling of additional wells and installation of additional manned facilities.

Administrative Procedure Act

We have determined, in accordance with 5 U.S.C. 553(b)(3)(B) of the Administrative Procedure Act, that a notice of proposed rulemaking is not required and is impracticable in the issuance of this rule. We invite comments on this interim rule so changes can be made in the future, if warranted.

Paperwork Reduction Act

The MMS has submitted the information collection requirements in 30 CFR 203 to the Office of Management and Budget (OMB) with a request for emergency processing. We have stated that the time period for OMB approval should coincide with the effective date of this Interim Rule. The information collection in this rule has been approved on an emergency basis through August 31, 1996, under OMB control number 1010–0071. However, we still will conduct a full review and comment process for this collection of information. The new title, ''30 CFR 203, Relief or Reduction in Royalty Rates,'' is consistent with that of the interim final rule for Part 203.

Send comments regarding the burden or any other aspect of the collection of information contained in this part, including suggestions for reducing the burden, to the Information Collection Clearance Officer, Minerals Management Service, Mail Stop 2300, 381 Elden Street, Herndon, VA 22070–4817 and to the Office of Information and Regulatory Affairs, Office of Management and Budget, Attn: Desk Officer for the Department of the Interior (OMB control number 1010–0071), Washington, DC 20503.

The Paperwork Reduction Act of 1995 provides that an agency may not conduct or sponsor, and a person is not required to respond to, a collection of information unless it displays a currently valid OMB control number.

Respondents to this collection of information are Federal oil and gas lessees. The frequency of response is on an occasion basis. We expect the number of responses (applications) for the remainder of this fiscal year to be relatively small. The number will peak during fiscal year 1997 and decline thereafter. The following chart represents an average of the anticipated number of annual applications over a three year period and the associated reporting burdens. The burden estimates include the time for reviewing instructions, searching existing data sources, gathering and maintaining the data needed, and completing and reviewing the collection of information.

OCSLA

Type of application	Responses per year	Hours per response	Hours per year
Leases with inadequate revenues to sustain continued production	4	300	1,200
Leases proposing an expansion of production that would be uneconomic absent relief	7	800	5,600
Total annual burden			6,800

DWRRA

Type of Application	Responses per year	Hours per response	Hours per year
DWRRA lease on a field that did not produce prior to 11/28/95	23	1,200	27,600
DWRRA leases proposing a significant expansion of production	7	800	5,600
Redetermination	6	800	4,800
Short Form Applications	7	40	280
Total annual burden			38,280

In addition to the hour burden outlined above, there are two other cost burdens to the respondents. (1) We will charge lessees (respondents) applying for royalty relief an amount which covers the cost of processing their applications. This is discussed above in Section VI. Recovery of Costs. (2) A respondent's application or pre-production report must be accompanied by a report prepared by an independent certified public accountant as described in section 203.55(c) of the rule.

Takings Implication Assessment

The Department of the Interior certifies that this rule does not represent a governmental action capable of interference with constitutionally protected property rights. A Takings Implication Assessment prepared pursuant to E.O. 12630, Government Action and Interference with Constitutionally Protected Property Rights, is not required.

E.O. 12988

The Department has certified to the OMB that this regulation meets the applicable standards provided in section 3(b)(2) of E.O. 12988.

National Environmental Policy Act

We examined the interim rule and have determined that it does not constitute a major Federal action significantly affecting the quality of the human environment pursuant to section 102(2)(C) of the National Environmental Policy Act of 1969 (42 U.S.C. 4332).

Unfunded Mandate Reform Act of 1995

This rule does not contain any unfunded mandates to State, local, or tribal governments or the private sector.

List of Subjects in 30 CFR Part 203

Continental shelf, Government contracts, Indians-lands, Minerals royalties, Oil and gas exploration, Public lands—mineral resources, Sulfur.

Dated: May 20, 1996.

Bob Armstrong,

Assistant Secretary, Land and Minerals Management.

For the reasons in the preamble, the Minerals Management Service (MMS) is amending 30 CFR part 203 as follows:

PART 203—RELIEF OR REDUCTION IN ROYALTY RATES

1. The authority citation for part 203 continues to read as follows:

Authority: 25 U.S.C. 396 *et seq.*; 25 U.S.C. 396a *et seq.*; 25 U.S.C. 2101 *et seq.*; 30 U.S.C. 181 *et seq.*; 30 U.S.C. 351 *et seq.*; 30 U.S.C. 1001 *et seq.*; 30 U.S.C. 1701 *et seq.*; 31 U.S.C. 9701; 43 U.S.C. 1301, *et seq.*; 43 U.S.C. 1331 *et seq.*; and 43 U.S.C. 1801 *et seq.*

2. Subpart A is added to read as follows:

Subpart A—General Provisions

§ 203.1 Authority for information collection.

(a) The Office of Management and Budget (OMB) approved the information collection requirements in part 203 under 44 U.S.C. 3501 *et seq.* and assigned OMB control number 1010–0071. The MMS uses the information to determine whether granting a royalty relief request will result in the production of resources that would not be produced without such relief. The application for royalty relief must contain sufficient financial, economic, reservoir, geologic and geophysical, production, and engineering data and information to determine whether relief should be granted in accordance with applicable law. the application also must contain sufficient data and information to determine whether the requested relief will result in an ultimate increase in resource recovery and provide for reasonable returns on project investments. The applicant's requirement to respond is related only to the request to obtain royalty relief. The applicant has no obligation to make this request.

(b) An agency may not conduct or sponsor, and you are not required to respond to, a collection of information unless it displays a currently valid OMB control number.

(c) Send comments regarding the burden of this information collection or any other aspect of the collection of information under provisions of this part, including suggestions for reducing the burden, to the Information Collection Clearance Officer; Minerals Management Service, Mail Stop 2300, 381 Elden Street; Herndon, Virginia 20170–4817 and the Office of Management and Budget; Office of Information and Regulatory Affairs, Attn: Desk Officer for the Department of the Interior (1010–0071); Washington, DC 20503.

(d) The MMS will protect information considered confidential or proprietary under applicable law and under regulations at § 203.53(b)(ii) and part 250 of this chapter.

3. Subpart B is revised to read as follows:

Subpart B—OCS Oil, Gas, and Sulfur, General

Sec.

203.50 Definitions.
203.51 What is MMS's authority to grant royalty relief?
203.52 Net revenue share royalty relief.
203.53 Royalty relief for certain deep-water leases in the Gulf of Mexico.
203.54 (Reserved)
203.55 What information is required for the net revenue share royalty relief and deep-water royalty relief application supplemental reports?
203.56 Recovery of application processing costs.

Subpart B—OCS Oil, Gas, and Sulfur, General

§ 203.50 Definitions.

Terms used in this part have the following meaning:

Field means an area consisting of a single reservoir or multiple reservoirs all grouped on, or related to, the same general geological structural feature and/or stratigraphic trapping condition. There may be two or more reservoirs in a field that are separated vertically by intervening impervious strata, or laterally by local geologic barriers, or both.

Pre-enactment deep-water lease (PDWL) means an Outer Continental Shelf (OCS) lease issued as a result of a lease sale held before November 28, 1995. The lease must be in a water depth of at least 200 meters and in the Gulf of Mexico west of 87 degrees, 30 minutes West longitude.

Project to significantly expand production (PSEP) means a project proposed in an approved Supplemental Development Operations Coordination Document (DOCD) that will result in an increase in ultimate recovery of resources from the field and that involves a substantial capital investment (e.g., the addition of a fixed-leg platform, subsea template and manifold, tension-leg platform, multiple well projects). The project must be on a PDWL.

Sunk costs means costs (as specified in § 203.55) of exploration, development, and production incurred after the date of first discovery on the field and prior to the date of application for royalty relief. Sunk costs also include the costs of the discovery well qualified as producible under 30 CFR 250.11.

§ 203.51 What is MMS's authority to grant royalty relief?

Under the OCS Lands Act, 43 U.S.C. 1337, as amended by the OCS Deep Water Royalty Relief Act, Public Law 104–58, MMS may grant three types of royalty relief listed in this section.

(a) Under 43 U.S.C. 1337(a)(3)(A), MMS may reduce, suspend, or eliminate the royalty specified for any producing OCS lease to promote increased production. If your OCS lease has inadequate revenues to sustain production or if you are proposing a project to expand production that would be uneconomic without royalty relief, MMS may grant royalty relief as specified in these regulations at § 203.52 (Net Revenue Share Royalty Relief).

(b) Under 43 U.S.C. 1337(a)(3)(B), MMS may grant royalty reductions or suspensions to promote development,

increase production, or encourage production of marginal resources on producing or non-producing leases in the Gulf of Mexico, west of 87 degrees, 30 minutes West longitude. Section 203.54 is reserved for the regulations to implement this provision.

(c) Under 43 U.S.C. 1337(a)(3)(C), if your PDWL is on a field that did not produce before November 28, 1995, or if you have a PDWL where you propose a PSEP, MMS may suspend royalties for volumes of new production which would be uneconomic without royalty relief as specified in these regulations in § 203.53 (Royalty relief for certain deep-water leases in the Gulf of Mexico).

§ 203.52 Net revenue share royalty relief.

(a) *How do I apply for net revenue share (NRS) royalty relief?*

This section explains how to obtain royalty relief under 43 U.S.C. 1337(a)(3)(A) if your lease has inadequate revenues to sustain production or if you are proposing a project to expand production that would be uneconomic without royalty relief. To apply for relief, submit a complete application to the appropriate MMS Regional Director in accordance with this section and the applicable guidelines in § 203.52(b) and § 203.55. An application fee in accordance with § 203.56 must accompany the application.

(b) *What do I need to include in my application?*

(1) A complete application for royalty relief must include an original and two copies of:

(i) Administrative Information and Relief Justification, and

(ii) Net Revenue Share Economic Viability Report.

(2) If you are proposing a project to expand production that would be uneconomic without royalty relief, your application must also include two copies (one set of digital information) of:

(i) Geologic and Geophysical Report;

(ii) Production Report; and

(iii) Engineering Report.

(3) Section 203.55 describes the reports required for the complete application. The appropriate regional office will provide specific guidance on the format for the required reports.

(c) *What are the NRS royalty relief approval criteria?*

(1) MMS may grant your request for royalty relief only if it concludes that royalty relief will increase the ultimate recovery of hydrocarbons by extending lease production for at least one year. However, if you are proposing a project to expand production, MMS will approve your request for royalty relief only if the proposed project would be uneconomic without royalty relief.

(2) If you have a lease with inadequate revenues to sustain production, MMS may grant your request for royalty relief only if it concludes that:

(i) royalties paid to MMS over the most recent 12-month period exceed 75 percent of net revenues; and

(ii) royalties are projected to take an increasing share of net revenues over the next 12 months.

(d) *What royalty relief will MMS grant?*

(1) Except as provided in paragraph (d)(2)of this section, if you meet the royalty relief criteria of this section, MMS may offer to modify the royalty terms of your lease to a NRS. The percentage of the net revenue due to MMS will be established in the MMS NRS guidelines available in the appropriate Regional Office.

(2) If you are proposing a project to expand production but no amount of royalty relief would make the project economic, MMS will deny the request for royalty relief.

§ 203.53 Royalty relief for certain deep-water leases in the Gulf of Mexico.

(a) *Who may apply for deep-water royalty relief?*

This section explains how to obtain royalty relief under 43 U.S.C. 1337(a)(3)(C). You may apply for royalty relief if you are a lessee of a PDWL or a unit that contains one or more PDWL's, subject to the limitation in paragraph (b)(3) of this section. You may apply for relief if:

(1) your lease or unit is part of a field from which no royalties were due on production, other than test production, prior to November 28, 1995; or

(2) you are proposing a PSEP.

(b) *How do I apply for deep-water royalty relief?*

(1) You must submit a complete application to the MMS Regional Director of the Gulf of Mexico OCS Region. An application fee in accordance with § 203.56 must accompany the application.

(2) A complete application includes an original and two copies (one set of digital information) of:

(i) Administrative Information and Relief Justification;

(ii) Deep-Water Royalty Relief Economic Viability Report;

(iii) Deep-Water Royalty Relief Cost Report;

(iv) Geologic and Geophysical Report;

(v) Production Report; and

(vi) Engineering Report.

Section 203.55 describes what these reports must include. The Gulf of Mexico Regional Office will provide specific guidance on the format for the required reports.

(3) For a royalty suspension on production from fields from which no royalties were due on production, other than test production, before November 28, 1995:

(i) Except as provided in paragraph (b)(3)(iii) of this section, MMS will accept only one joint application for all leases that are part of the field on the date of application. The Regional Director maintains a list of all leases in each discovered field.

(ii) If a lessee does not want to share proprietary data with other lessees on the field, that lessee may submit separately to MMS the proprietary geological or geophysical data that is a necessary part of the joint application. The application is not complete until MMS receives all the required information for each lease on the field. In explaining its assumptions and reasons for its determinations under this section, MMS will not disclose proprietary data.

(iii) MMS will waive the joint application requirement if the applicant(s) shows good cause for the waiver. The applicant also must demonstrate that it made a good faith effort to obtain the participation of all lessees in the field. A lease that is part of the field on the date of application but that is not included in the application because its lessee(s) fails or refuses to participate is not eligible for the royalty relief for the field that is the subject of the application. However, that lessee still may apply for other royalty relief under this section.

(iv) With the exceptions listed below, the lessees on a field may submit only one complete application for royalty relief during the life of the field. However, lessees may submit another application if:

(A) They are eligible to apply for a redetermination under § 203.53(d)(1);

(B) MMS has withdrawn approval of a previously granted royalty suspension under § 203.53(e);

(C) they apply for royalty relief for a PSEP; or

(D) they withdraw the application before MMS deems it complete.

(c) *How will MMS evaluate an application?*

(1)(i) MMS will determine within 20 working days if your application for royalty relief is complete. If your application is incomplete, MMS will provide you with an explanation of what it needs to become complete. If you withdraw your application after MMS has deemed it complete, you may only reapply under the redetermination provision of § 203.53(d).

(ii) When MMS determines that your application is complete, MMS will

evaluate the application within 180 days. MMS may extend the 180-day evaluation period for an additional 30 days, if necessary, to complete the evaluation. If you agree, MMS also may extend the 180-day period for more than 30 days.

(iii) If MMS must audit sunk costs to evaluate your application, MMS may request that the 180-day evaluation period be tolled from the time you receive notice from MMS until you provide the records necessary to conduct the audit.

(iv) If MMS determines during the evaluation period that it cannot evaluate your application because:

(A) vital information is missing;

(B) the data and information provided in support of the application are inconclusive; or

(C) of any other valid reason;

MMS may request that the 180-day evaluation period be tolled from the time you receive notice from MMS until you provide needed data, explanations, or revisions.

(2)(i) If your application is for a suspension of royalties on production from a field from which no royalties were due on production, other than test production, before November 28, 1995, MMS will determine if development of the field is economic without royalty relief. MMS will include your sunk costs in making this determination. If MMS determines that development of the field would be economic without relief, MMS will deny your request for a royalty suspension.

(ii) For fields that did produce, other than test production, before the date of application, MMS will not include your sunk costs when it determines if development of the field is economic without royalty relief. If MMS determines that development of the field would be economic without relief, MMS will deny your request for a royalty suspension.

(iii) If MMS determines for a field subject to either paragraph (c)(2) (i) or (ii) of this section that development of the field would not be economic without a royalty suspension, and that a royalty suspension could make the project economic, MMS will determine the size of the royalty suspension volume necessary to make the field economically viable. MMS will determine your royalty suspension volume subject to the minimum royalty suspension volumes specified in paragraph (h)(1)(i) of this section. MMS will not include sunk costs when it makes this determination.

(iv) If no amount of royalty suspension would make the field economic, MMS will deny your request for royalty relief.

(3)(i) If your application for royalty relief is for a PSEP, MMS will determine if the proposed project is economic without royalty relief. If it is economic, MMS will deny your request for royalty relief.

(ii) If MMS determines that development of the project would not be economic without royalty relief, MMS will determine the royalty suspension volume necessary to make the project economically viable.

(iii) If no amount of royalty suspension volume would make the project economic, MMS will deny your request for royalty relief.

(iv) MMS will not include sunk costs in evaluating applications for royalty relief for a PSEP.

(4) If MMS approves your application for royalty relief, you must submit a pre-production report 60 days before the planned start of production which is subject to the royalty suspension volume, as specified at § 203.55.

(d) *When will MMS reconsider its determination?*

(1) You may request a redetermination of either a denial of an application or the size of the royalty suspension volume granted in an approved application. However, you may request a redetermination only if you have not started producing hydrocarbons subject to the royalty suspension and one of the following situations occurs:

(i) You have significant new geologic or geophysical data that did not exist at the time of the previous application and that causes you to change your estimates of gross resource size, quality, or projected flow rates. Examples of new data include results from drilling new wells or obtaining new three-dimensional seismic data and information. Reinterpretation of existing data is not significant new data. The change in resource information must be sufficient to materially affect the results of the previous determination.

(ii) Prices for oil or gas have decreased at least 25 percent, determined as follows:

(A) Calculate the arithmetic average of daily closing prices for light sweet crude oil and for natural gas on the New York Mercantile Exchange (NYMEX) for the most recent 12 months.

(B) Calculate the weighted average prices for oil and gas calculated under (d)(1)(ii)(A) of this section using the volumes of oil and gas identified in the most likely scenario (required under § 203.55) described in your previous complete application for royalty relief.

(C) Perform the same calculations as required in paragraphs (d)(1)(ii)(A) and (B) of this section, but use the arithmetic average of daily closing prices for light sweet crude oil and for natural gas on the NYMEX for the 12-month period preceding the date of your previous complete application.

(D) If the weighted average price calculated under paragraph (d)(1)(ii)(B) of this section is at least 25 percent less than the weighted average price calculated under paragraph (d)(1)(ii)(C) of this section, then you satisfy the requirements of this paragraph; or

(iii) Prior to starting construction of your development/production system, you have revised your estimated development costs, and they are at least 120 percent of the eligible development costs associated with the most likely scenario described in your previous complete application.

(2)(i) Your request for a redetermination must include a new complete application, as discussed in paragraph (b) of this section and § 203.55. MMS will evaluate your application for a redetermination under paragraph (c) of this section.

(ii) MMS will determine within 20 working days if your application for a redetermination is complete. If your application is incomplete, MMS will provide you with an explanation of what it needs to become complete. If MMS later determines that your application does not meet any of the criteria under (d)(1)(i),(ii), or (iii) of this section, it will consider your application incomplete.

(iii) When MMS determines that your application is complete, MMS will evaluate the application within 120 days. MMS may extend the 120-day evaluation period for an additional 30 days if necessary to complete the evaluation. If you agree, MMS also may extend the 120-day period for more than 30 days.

(iv) If MMS must audit sunk costs to evaluate your application, MMS may request that the 120-day evaluation period be tolled from the time you receive notice from MMS until you provide the records necessary to conduct the audit.

(v) If MMS determines during the evaluation period that it cannot evaluate your application because:

(A) Vital information is missing;

(B) The data and information provided in support of the application are inconclusive; or

(C) Of any other valid reason; MMS may request that the 120-day evaluation period be tolled from the time you receive notice from MMS until you provide the needed data, explanations, or revisions.

(e) *When may MMS withdraw approval of an application for royalty relief?*

MMS will withdraw approval of your application for royalty relief if:

(1) You change the type of development system proposed in your approved application (e.g., change from stand-alone to tieback or vice versa);

(2) You fail to start construction of the approved development/production system within two years of the date MMS approved your application—notwithstanding any suspension granted under § 250.10 of this chapter; or

(3)(i) The actual development costs reported in your pre-production report (paragraph (c)(4) of this section) are less than 80 percent of the development costs from the date of application to the date of the pre-production report associated with the most likely scenario described in your approved application. In this case, you may retain 50 percent of the amount of the royalty suspension volume that MMS previously granted.

(ii) If MMS granted you a royalty suspension volume after you requested a redetermination under paragraph (d)(1)(iii) of this section, MMS may withdraw approval of your application for a royalty suspension if your actual development costs in your pre-production report (paragraph (c)(4) of this section) are less than 90 percent of the eligible development costs from the date of application to the date of the pre-production report associated with the most likely scenario described in your approved application.

(iii) If MMS discovers that the actual development costs are less than the amounts specified in paragraphs (e)(3)(i) or (ii) of this section, MMS will withdraw retroactively its approval of the royalty suspension volume. You will owe royalties and interest on all production that was subject to the previously granted royalty suspension.

(4) If MMS determines that you provided false historical or intentionally inaccurate information that was material to MMS in granting royalty relief under this section, MMS will rescind its approval as of the date of the approval. You must pay royalties and late payment interest determined under 30 U.S.C. 1721 and § 218.54 of this chapter on all volumes for which you used the royalty suspension. You also may be subject to penalties under other provisions of law.

(5) If MMS withdraws its approval of a royalty suspension for any of the reasons in paragraphs (e)(1), (2) or (3) of this section, you may apply again for relief under paragraph (b) of this section and § 203.55.

(f) *What happens if MMS fails to accept or reject my application in a timely manner?*

(1) For applications for fields from which no royalties were due on production, other than test production, prior to November 28, 1995, if MMS does not make its determinations on your application within the time period specified in paragraph (c)(1) or (d)(1) of this section, including any applicable extension, you will receive the minimum royalty suspension volumes specified in paragraph (h)(1)(i) of this section.

(2) For PSEP applications, if MMS does not make its determinations on your application within the time period specified in paragraph (c)(1) or (d)(2) of this section, including any applicable extension, you will receive a royalty suspension for the first year of the project's production.

(g) *How do I appeal an MMS decision under 203.53?*

(1) MMS' decision whether to grant deep-water royalty relief and its decision on the size of the royalty suspension volume are final agency actions. You have no right to further administrative review, including Secretarial review, of these decisions. The MMS's decisions are judicially reviewable under section 10(a) of the Administrative Procedure Act (5 U.S.C. 702) only if you file an action within 30 days of the date you receive MMS's decision. MMS's will send its decision to you by certified mail, return receipt requested.

(2)(i) Except as provided in paragraph (g)(2)(ii) of this section, MMS decisions on designating a lease as part of a field are final agency actions.

(ii) If MMS designates your lease as part of a field, within 15 days of such designation you may file a written request with the Director for reconsideration accompanied by a statement of reasons. The Director will respond in writing either affirming or reversing the decision. The Director's decision is the final decision of the Department.

(h) *How does a royalty suspension volume apply to your production?*

This paragraph explains how the royalty suspension volumes in section 302 of the OCS Deep Water Royalty Relief Act, apply to production from PDWL's. For purposes of this paragraph, any volumes of production that are not royalty bearing under the lease or the regulations in this chapter do not count against royalty suspension volumes. Also, for purposes of this paragraph, production includes volumes allocated to a lease under an approved unit agreement. The following provisions apply only to those leases for which the lessee(s) applies for and receives a royalty suspension volume under this section.

(1) For fields from which no royalties were due on production, other than test production, prior to November 28, 1995:

(i) The water depth of a lease is based on the water depth delineations in the ''Royalty Suspension Areas Map'' in effect at the time of your application. If the application for the field includes leases in different water depth categories, the minimum royalty volume associated with the deepest lease applies. The minimum royalty suspension volumes are: (A) 17.5 million barrels of oil equivalent (MMBOE) in 200 to 400 meters of water;

(B) 52.5 MMBOE in 400 to 800 meters of water; and

(C) 87.5 MMBOE in more than 800 meters of water.

(ii) If your PDWL is the only lease on the field, you do not owe royalty on the production from your lease up to the royalty suspension volume MMS granted.

(iii) If a field consists of more than one PDWL, payment of royalties on the PDWLs' production is suspended until their cumulative production equals the royalty suspension volume MMS granted. The royalty suspension volume for each lease equals each lease's actual production (or production allocated under an approved unit agreement) until cumulative production equals the field's royalty suspension volume.

(iv) If a PDWL or an eligible lease, as defined in § 260.102 of this chapter, is added to a field for which MMS has granted a royalty suspension volume under this section, the field's royalty suspension volume will not change. The additional lease may receive a royalty suspension volume only to the extent of its production from the field before the cumulative production from the field equals the royalty suspension volume MMS approved. However, before your PDWL may participate in the royalty suspension volume already granted to the field, you must apply for royalty relief using an abbreviated form available at the Gulf of Mexico OCS Regional Office.

(v) If your PDWL is part of a field that already has a royalty suspension volume for eligible leases under § 260.110 of this chapter, and you apply and qualify for royalty relief under this section, all the leases in the field share a single royalty suspension volume that is the greater of the volume established for the eligible leases under § 260.110 of this chapter or the volume MMS determines under this section.

(2) For a PSEP:

(i) If your PDWL is the only lease included in the project, you do not owe

royalty on the incremental production from the project up to the royalty suspension volume MMS granted.

(ii) If the project includes more than one lease, the royalty suspension volume for each lease equals each lease's actual incremental production from the project (or production allocated under an approved unit agreement) until cumulative incremental production for all leases in the project equals the project's royalty suspension volume.

(3) Your lease may receive more than one royalty suspension volume. You may apply for royalty relief under this section for each field that includes your lease, and each field would receive a separate royalty suspension volume if it meets the evaluation criteria of paragraph 203.53(c). You may also apply for relief for a PSEP, even if MMS has already granted a royalty suspension volume to the field that encompasses that project.

(4) You may receive a royalty suspension volume only if your entire lease is west of 87 degrees, 30 minutes West longitude. A field that lies on both sides of this meridian will receive a royalty suspension volume only for those leases lying entirely west of the meridian.

(5) You must measure natural gas production subject to the royalty suspension volume as follows: 5.62 thousand cubic feet of natural gas equals one barrel of oil equivalent, as measured at 15.025 psi, 60 degrees Fahrenheit, and fully saturated.

(6)(i) If in the previous calendar year the arithmetic average of the daily closing prices on the NYMEX for light sweet crude oil exceeds $28.00 per barrel, as adjusted in paragraph (h)(8) of this section, the royalty relief authorized in this section is suspended and any production of oil is subject to royalties at the lease stipulated royalty rate. However, this production counts as part of the established royalty suspension volume. By January 31 of the current calendar year, you must pay the royalty due plus interest, in accordance with 30 U.S.C 1721 and § 218.54 of this chapter, on any volume of oil from the previous year for which you did not pay royalty.

(ii) If the arithmetic average of the daily closing prices on the NYMEX for light sweet crude oil from the previous calendar year exceeds $28.00 per barrel, as adjusted in paragraph (h)(8) of this section, you must pay royalties on all your oil production in the current year. If the arithmetic average of the daily closing prices on the NYMEX for light sweet crude oil for the current calendar year is $28.00 per barrel or less, as adjusted in paragraph (h)(8) of this section, you are entitled to a refund or credit, with interest, of royalties paid that year on any royalty suspension volume for oil production. You must follow MMS regulations at part 230 of this chapter for receiving refunds or credits.

(7)(i) If in the previous calendar year the arithmetic average of the daily closing prices on the NYMEX for natural gas exceeds $3.50 per million British thermal units, as adjusted in paragraph (h)(8) of this section, the royalty relief authorized in this section is suspended and any production of natural gas is subject to royalties at the lease stipulated royalty rate. However, this production counts as part of the established royalty suspension volume. By January 31 of the current calendar year, you must pay the royalty due plus interest, in accordance with 30 U.S.C 1721 and § 218.54 of this chapter, on any volume of natural gas from the previous year for which you did not pay royalty.

(ii) If the arithmetic average of the daily closing prices on the NYMEX for natural gas for the previous calendar year exceeds $3.50 per million British thermal units, as adjusted in paragraph (h)(8) of this section, you must pay royalties on all your natural gas production in the current year. If the arithmetic average of the daily closing prices on the NYMEX for natural gas for the current calendar year is $3.50 per million British thermal units or less, as adjusted in paragraph (h)(8) of this section, you are entitled to a refund or credit, with interest, of royalties paid that year on any royalty suspension volume for natural gas production. You must follow MMS regulations at part 230 of this chapter for receiving refunds or credits.

(8) Change the prices referred to in paragraphs (h)(6) and (7) of this section during each calendar year after 1994 by the percentage, if any, by which the implicit price deflator for the gross domestic product changed during the preceding calendar year.

(9) A royalty suspension volume will continue until the end of the month in which the cumulative production from the field or PSEP reaches the established royalty suspension volume.

§ 203.54 [Reserved]

§ 203.55 What information is required for the net revenue share royalty relief and deep-water royalty relief application supplemental reports?

(a) You must submit the applicable supplemental reports listed below.

(1) *Administrative information and relief justification.*

All royalty relief applications must contain this report, which must include:

(i) Field name;

(ii) Serial number of leases in the field, names of the lease the titleholders of record, the lease operators, and the identification of whether any lease is part of a unit;

(iii) The API number and location of each well that has been drilled on the field/lease or project;

(iv) Location of any new wells proposed under the terms of the application;

(v) Description of field/lease history;

(vi) Statement that the reserves would not be produced without relief;

(vii) Full information as to whether royalties or payment out of production will be paid to anyone other than the United States, the amount to be paid, and the amount of reduction in such payment if relief is granted;

(viii) Amount of relief needed to make the lease *(NRS royalty relief),* field *(deep-water royalty relief),* or project economic;

(ix) Confirmation that MMS approved a DOCD or supplemental DOCD *(NRS expansion of production and deep-water royalty relief application only);* and

(x) A narrative description of the development activities associated with the proposed capital investments and an explanation of proposed timing of the activities and the effect on production *(NRS expansion of production and deep-water royalty relief application only).*

(2) *Net revenue share economic viability report.*

NRS royalty relief applications must contain this report. This report must present cash flow data, including 36 months of historical data and 12 months of projected data, for the following items:

(i) Lease production subject to royalty;

(ii) Total revenues;

(iii) Royalty payments out of production;

(iv) Operating costs;

(v) Transportation and processing costs;

(vi) Capital expenditures (if applicable); and

(vii) Well drilling costs (if applicable).

(3) *Deep-water royalty relief economic viability report.*

This report should demonstrate that the project appears economic without royalties and sunk costs using the model provided by MMS. A company may provide supplemental information, including its own model and model results. This report must include all of the items listed below.

(i) Economic assumptions provided by MMS:

(A) Starting oil and gas prices;
(B) Real price growth;
(C) Real cost growth or decline rate, if any;
(D) Base year;
(E) Range of discount rates; and
(F) Tax rate (for use in determining after-tax sunk costs).
(ii) Projected cash flow analysis (from application date using annual totals and constant dollar values). All costs, gross production, and scheduling must be consistent with the data in the reserve, engineering, production, and cost reports, and the three scenarios (conservative, most likely, optimistic; provided in the various reports must be consistent with each other and the proposed development system. The analysis must show:
(A) Oil/gas production;
(B) Total revenues;
(C) Capital expenditures;
(D) Operating costs;
(E) Transportation costs; and
(F) Before tax net cash flow.
(iii) Discounted values.
(A) Discount rate used (selected from within range provided in MMS guidelines).
(B) Before tax net present value without royalties, overrides, sunk costs, and ineligible costs.
(4) *Deep-water royalty relief cost report.*
Deep-water royalty relief applications must contain this report. Report all actual and projected costs listed in this paragraph in the format detailed in the guidelines.
(i) Sunk costs. This includes all eligible costs, in current dollars and for which documentation is provided, actually incurred subsequent to and including the first discovery well on the field. Sunk costs count on an after-tax, expensed basis, using nominal (current dollar) amounts.
(ii) Delineation and development costs, based on actual costs or current authorization for expenditures. These costs include:
(A) Platform well drilling costs and average depth;
(B) Platform well completion costs;
(C) Subsea well drilling costs and average depth;
(D) Subsea well completion costs;
(E) Production system (platform) costs; and
(F) Flowline fabrication and installation costs.
(iii) Production costs, based on historical costs, engineering estimates, or analogous projects. These costs include:
(A) Operating costs;
(B) Equipment costs; and
(c) Existing royalty overrides (MMS will not use the royalty overrides in its evaluation).
(iv) Transportation costs, based on historical costs, engineering estimates, or analogous projects. These costs include:
(A) Oil and/or gas tariffs from pipeline or tankerage;
(B) Trunkline/tieback line costs; and
(C) Gas plant processing costs for NGL's.
(v) Ineligible costs. These costs include:
(A) Acquisition costs;
(B) Application fees;
(C) Prospective exploration well costs;
(D) Costs associated with obligations existing prior to the application; and
(E) Other ineligible costs listed in § 203.55(b).
(vi) Uncertainty. You must provide a cost scenario consistent with each one of the three field development and production profiles (conservative, most likely, optimistic). Express costs in constant real dollar terms for the base year. You may also express the uncertainty of each cost scenario as a minimum and maximum percentage of the base value.
(vii) Scheduling. Provide costs on an annual basis (in real dollars) for each of the categories in paragraphs (a)(4)(i) through (a)(4)(vi) of this section.
(viii) Abandonment. Provide the costs to plug and abandon wells and to remove production systems for which costs have not been incurred at the time of application.
(ix) Pre-production report. You must file a pre-production report 60 days before the start of the production subject to an approved royalty suspension. For each of the cost categories in the deep-water royalty relief cost report, you must include actual costs up to the date when the pre-production report is submitted. Retain supporting records for these costs and make them available to MMS upon request.
(5) *Geologic and geophysical report.*
Deep-water royalty relief and NRS production expansion proposal applications must contain this report. This report must include all of the items listed below.
(i) Seismic data:
(A) Non-interpreted 2D/3D survey lines (8mm tape) (SEGY format or IES format);
(B) Interpreted 2D/3D seismic survey lines identifying all known and prospective pay horizons, wells, and fault cuts;
(C) Digital velocity surveys in format of LTL 10/1/90;
(D) Plat map of ''shot points;'' and
(E) ''Time slices'' of potential horizons.
(ii) Well data.
(A) Hard copies of all well logs.
(*1*) One-inch electric log must show:
(*i*) pay zones and pay counts; and
(*ii*) lithologic and paleo correlation markers at least every 500 ft.
(*2*) One-inch type log must show missing sections from other logs where faulting occurs.
(*3*) Five-inch electric log must show:
(*i*) pay zones and pay counts; and
(*ii*) labeled points used in establishing Ro and Rt.
(*4*) Five-inch porosity logs must show:
(*i*) pay zones and pay counts; and
(*ii*) labeled points used in establishing reservoir porosity or labeled points showing values used in calculating reservoir porosity such as bulky density or transit time.
(B) Digital copies of all well logs spudded before December 1, 1995.
(C) Core data, if available.
(D) Well correlation sections.
(E) Pressure data.
(F) Production test results.
(G) PVT analysis, if available.
(iii) Map interpretations. For each reservoir included in the application, you must submit:
(A) Structure maps and top and base of sand maps showing well and seismic shot point locations;
(B) Isopach maps for net sand, net oil, net gas, all with well locations;
(C) Maps indicating well surface and bottom hole locations, location of development facilities, and shot points; and
(D) Identification of reservoirs not contemplated for development.
(iv) Reservoir data. For each reservoir included in the application, you must identify and submit:
(A) Oil and/or gas reserve/resource distribution;
(B) Probability of reservoir occurrence with hydrocarbons;
(C) Probability the hydrocarbon in the reservoir is oil, and the probability it is gas;
(D) Distributions for the parameters used to estimate the resources, i.e. acre, net thickness, recovery, porosity, salt water saturation, formation volume factor;
(E) Aggregated BOE reserve/resource for the field;
(F) Gas/oil ratio distribution for each reservoir;
(G) Yield distribution for each gas reservoir;
(H) Description of anticipated crude quality (e.g., gravity); and
(I) Points on the aggregated reserve/resource distribution used for the determination of the three (conservative, most likely, optimistic) production profiles specified in the production report.

(6) *Production report.* Deep-water royalty relief and NRS production expansion proposal applications must contain this report, which must include all of the items listed below.

(i) Production profile. Submit actual and projected (BOE) production by year for each of the following products: oil, condensate, gas, and associated gas.

(ii) Uncertainty *(deep-water royalty relief only).* Submit three production profiles as described in paragraph (a)(6)(i) of this section. Each one must be consistent with a specific point on the aggregated reserve/resource distribution and must represent a conservative, most likely, and an optimistic case.

(iii) Production drive mechanisms for each reservoir.

(iv) Quality adjustments to prices for gravity, sulfur, etc.

(7) *Engineering report.*

Deep-water royalty relief and NRS production expansion proposal applications must contain this report. However, NRS expanded production applications should submit this information only as it relates to the planned development. This report must include all of the items listed below.

(i) Development concept:

(A) Tension leg platform, fixed, floater type, subsea tieback, etc.; and

(B) Construction schedule.

(ii) Planned wells:

(A) Number of wells planned;

(B) Type of well (platform, subsea, vertical, deviated, horizontal);

(C) Well depth;

(D) Drilling schedule;

(E) Completion description (single, dual, horizontal, etc.); and

(F) Completion schedule.

(iii) Production system equipment:

(A) Production capacity for oil and gas and a description of its limiting component(s);

(B) Unusual problems (low gravity, high sulfur content, etc.);

(C) Subsea structures;

(D) Flowlines; and

(E) Production system installation schedule.

(iv) Multi-phase development plans;

(A) Conceptual basis for developing in phases and goals/milestones required for commencing subsequent phases; and

(B) Justification for the exclusion of reservoirs not contemplated for development.

(v) Uncertainty. Submit schedules for development consistent with each of the three field production profiles (conservative, most likely, optimistic) provided in the production report.

(b) Ineligible costs. MMS will not include certain costs in making its royalty relief determinations. These include, but are not limited to:

(1) Costs incurred before first discovery on the field;

(2) Cash bonuses;

(3) Royalty relief application fees;

(4) Lease rentals, royalties, and net profit share and net revenue share payments;

(5) Legal expenses;

(6) Damages and losses;

(7) Taxes;

(8) Interest or finance charges;

(9) Fines or penalties;

(10) Designated well costs, including prospective exploration and delineation costs; and

(11) Costs associated with prior existing obligations (e.g., royalty overrides or other forms of payment for acquiring a financial position in a lease, expenditures for plugging wells and removal and abandonment of facilities existing on the date of the application).

(c) The applicant or the applicant's authorized representative must certify that all information submitted in an application or a pre-production report is accurate and complete. The application or pre-production report must be accompanied by a report prepared by an independent certified public accountant (CPA) expressing an unqualified opinion on the accuracy of the actual historical financial information presented in the application or pre-production report and that the presentation of data and information conforms to the MMS guidelines. The applicant will make the independent CPA available to the MMS to respond to questions which may arise regarding the evaluation of the historical information. This requirement does not limit the MMS's ability to conduct further review of the applicant's records to support the historical financial information included in the application.

§ 203.56 Recovery of application processing costs.

When you submit an application for royalty relief, you must include a payment to reimburse MMS for the costs it incurs in processing your application. The MMS will establish in a Notice to Lessees a schedule that will specify the fees that must be paid for each of the different types of royalty relief applications. Regional Directors will periodically update the fee schedule to reflect changes in MMS costs as well as to provide other information necessary for the administration of our royalty relief program.

[FR Doc. 96–13626 Filed 5–30–96; 8:45 am]

BILLING CODE 4310–MR–P

DEPARTMENT OF THE TREASURY

Secret Service

31 CFR Part 411

[1505–AA69]

Color Illustrations of U.S. Currency

AGENCY: Secret Service, Treasury.

ACTION: Final rule.

SUMMARY: Pursuant to the Counterfeit Deterrence Act of 1992, the Secret Service permits color illustrations of United States currency provided such illustrations are consistent with the requirements set out in this final rule. Prior to the issuance of this rule, color illustrations of U.S. currency were not permitted.

EFFECTIVE DATE: May 31, 1996.

FOR FURTHER INFORMATION CONTACT: Mark Mulligan, Attorney/Advisor, Office of Chief Counsel, U.S. Secret Service, 1800 G Street, N.W., Room 842, Washington, D.C. 20223, (202) 435–5771.

SUPPLEMENTARY INFORMATION: On June 26, 1995 (60 FR 32929), the Secret Service proposed to amend title 31, chapter IV of the Code of Federal Regulations by adding part 411 which would permit color illustrations of U.S. currency. At the time this proposal was issued, illustrations of U.S. currency were only permitted provided the illustration was in black and white and was of a size less than three-fourths or more than one and one-half, in linear dimension, of each part so illustrated, and provided the negatives and plates used in making the illustration were destroyed after their final use. 18 U.S.C. 504. Color illustrations of U.S. currency were not permitted.

Interested parties were invited to participate in the rulemaking proceeding by submitting written comments on the proposal. Five comments were received. The Secret Service carefully reviewed and evaluated these comments. In considering these comments, the Secret Service carefully weighed the recommendations and comments with the federal government's compelling interest of preventing the counterfeiting of U.S. currency.

Specifically, all the commentators to some extent questioned the need for and practicality of the requirement that the term ''non-negotiable'' be prominently and conspicuously placed across the center portion of any color illustration. After careful consideration, the Secret Service has decided to amend its proposal by removing the requirement

that the term ''non-negotiable'' be placed on any color illustration.

One comment addressed the requirement that ''all negatives, plates, positives, digitized storage medium, graphic files, magnetic medium, optical storage devices, and any other thing used in the making of the illustration that contain an image of the illustration or any part thereof shall be destroyed and/or deleted or erased immediately after their final use in accordance with this section.'' Proposed 31 CFR 411.1(a)(4). Specifically, this comment questioned the need for the immediate destruction of such items. After careful consideration of this comment and in order to be consistent with 18 U.S.C. 504, the Secret Service has decided to remove the word ''immediately'' from the final rule. Therefore, both the final rule and 18 U.S.C. 504 require that such items be destroyed after their ''final use'' in accordance with each respective provision.

Another comment suggested that the proposed rule should be expanded by identifying certain kinds of illustrations that could be considered not to give rise to an inference of an intent to defraud. The Secret Service disagrees. It is the Secret Service's position that a single rule applicable to all color illustrations be implemented for the sake of simplicity and consistency. Such a rule will be more easily understood by the public than a rule which contains exceptions for various types of illustrations. Further, not all of the statutory sections concerning the reproduction of U.S. currency require that an intent to defraud be established in order for a violation of law to occur. *See*, e.g., 18 U.S.C. 474.

The final rule requires the color illustrations to comply with the current size restrictions set out in 18 U.S.C. 504. In addition, such color illustrations must be one-sided.

The exceptions established by this rule, like the exceptions set out in 18 U.S.C. 504, apply notwithstanding any other provision of chapter 25 of Title 18 of the U.S. Code. However, the criminal liability imposed by 18 U.S.C. 474 and other applicable sections of chapter 25 of Title 18 of the U.S. Code could apply where a color illustration of U.S. currency fails to meet the requirements imposed by this regulation.

It has been determined that this document is not a significant regulatory action under Executive Order 12866. This rule permits the color illustrations of U.S. currency, which heretofore were prohibited by law. Further, pursuant to section 605(b) of the Regulatory Flexibility Act and for the reasons set forth above, it is hereby certified that this regulation will not have a significant economic impact on a substantial number of small entities.

Pursuant to 5 U.S.C. 553, it is also found and determined that good cause exists for not postponing the effective date of this rule 30 days after publication in the Federal Register because this rule permits a practice heretofore prohibited by statute.

List of Subjects in 31 CFR Part 411

Counterfeiting, Currency.

In consideration of the foregoing, the Secret Service amends title 31, chapter IV of the Code of Federal Regulations by adding part 411 as set forth below.

PART 411—COLOR ILLUSTRATIONS OF UNITED STATES CURRENCY

Authority: 18 U.S.C. 504; Treasury Directive Number 15–56, 58 FR 48539 (September 16, 1993)

§ 411.1 Color illustrations authorized.

(a) Notwithstanding any provision of chapter 25 of Title 18 of the U.S. Code, authority is hereby given for the printing, publishing or importation, or the making or importation of the necessary plates or items for such printing or publishing, of color illustrations of U.S. currency provided that:

(1) The illustration be of a size less than three-fourths or more than one and one-half, in linear dimension, of each part of any matter so illustrated;

(2) The illustration be one-sided; and

(3) All negatives, plates, positives, digitized storage medium, graphic files, magnetic medium, optical storage devices, and any other thing used in the making of the illustration that contain an image of the illustration or any part thereof shall be destroyed and/or deleted or erased after their final use in accordance with this section.

(b) [Reserved].

Paul A. Hackenberry,

Assistant Director, Office of Investigations.

[FR Doc. 96–13693 Filed 5–30–96; 8:45 am]

BILLING CODE 4810–42–P

DEPARTMENT OF VETERANS AFFAIRS

38 CFR Part 1

RIN 2900–AI06

National Cemeteries

AGENCY: Department of Veterans Affairs.

ACTION: Final rule.

SUMMARY: This document amends Department of Veterans Affairs (VA) national cemeteries regulations by eliminating provisions that simply restate statutory provisions of 38 U.S.C. 2306, 2400, 2401, 2402, 2407, and Chapter 83; by eliminating provisions that duplicate other regulations in 38 CFR 1.218–1.220, and by eliminating internal instructions not required to be published in the Federal Register.

EFFECTIVE DATE: May 31, 1996.

FOR FURTHER INFORMATION CONTACT: Mr. Ken Greenberg, Program Analyst, National Cemetery System, Executive Communications (402B1), Department of Veterans Affairs, 810 Vermont Avenue, NW., Washington, DC 20420, (202) 273–5179 (this is not a toll-free number).

SUPPLEMENTARY INFORMATION: This final rule consists of nonsubstantive changes and, therefore, is not subject to the notice and comment and effective date provisions of 5 U.S.C. 553.

The Secretary hereby certifies that this final rule will not have a significant economic impact on a substantial number of small entitles as they are defined in the Regulatory Flexibility Act, 5 U.S.C. 601–612. This final rule merely consists of nonsubstantive changes.

Catalog of Federal Domestic Assistance Numbers for programs affected by this regulation are 64.201, 64.202 and 64.203.

List of Subjects in 38 CFR Part 1

Administrative practice and procedures, Cemeteries, Claims, Privacy, Security.

Approved: May 17, 1996.

Jesse Brown,

Secretary of Veterans Affairs.

For the reasons set forth in the preamble, 38 CFR part 1 is amended to read as follows:

PART 1—GENERAL PROVISIONS

1. The authority citation for part 1 continues to read as follows:

Authority: 38 U.S.C. 501(a), unless otherwise noted.

2. The authority citation immediately preceding §§ 1.600 to 1.633 is revised to read as follows:

Authority: Sections 1.601 to 1.633 issued under 38 U.S.C. 501, 2306, chapter 24.

§§ 1.600, 1.604, 1.631 [Removed]

3. Sections 1.600, 1.604, and 1.631 are removed.

§ 1.601 [Amended]

4. In § 1.601, paragraph (a) is removed; and paragraphs (b) and (c) are redesignated as paragraphs (a) and (b), respectively.

§ 1.603 [Amended]

5. In § 1.603, paragraphs (a) and (b) are removed; the paragraph designation (c) and its heading are removed; paragraphs (c)(1) and (c)(2) are redesignated as paragraphs (a) and (b), respectively; and newly redesignated paragraphs (a)(i), (a)(ii), (a)(iii), and (a)(iv) are redesignated as paragraphs (a)(1), (a)(2), (a)(3) and (a)(4), respectively.

6. Section 1.620 is revised to read as follows:

§ 1.620 Eligibility for burial.

Section 2402 of title 38, United States Code, bestows eligibility for burial in any open cemetery in the National Cemetery System. The following rules in paragraphs (a) through (c) of this section state conditions in addition to those imposed by statute. To be eligible for burial in a national cemetery:

(a) A United States citizen who served in an allied armed force, as provided in 38 U.S.C. 2402(4), must have been a citizen of the United States at the time of entry on such service and at the time of his or her death.

(b) A minor child of an eligible person, as provided in 38 U.S.C. 2402(5), must have been at the time of his or her death under 21 years old or under 23 years old if pursuing a course of instruction at an approved educational institution.

(c) An unmarried adult child of an eligible person, as provided in 38 U.S.C. 2402(5), must have been physically or mentally disabled and incapable of self support.

(Authority: 38 U.S.C. 2402)

§ 1.630 [Amended]

7. In § 1.630, paragraph (b) is amended by removing the second and third sentences.

[FR Doc. 96–13477 Filed 5–30–96; 8:45 am]

BILLING CODE 8320–01–P

38 CFR Part 1

RIN 2900–AI09

Gender Policy for VA Publications and Other Communications

AGENCY: Department of Veterans Affairs.

ACTION: Final rule.

SUMMARY: This document amends regulations of the Department of Veterans Affairs (VA) by removing § 1.13 of 38 CFR. This section provided that VA publications and other communications must avoid using language refering only to the masculine gender when the feminine gender also was intended to be included. This guidance was intended to avoid any incorrect appearance of seeming to preclude benefits for female veterans, dependents, or beneficiaries. Although, VA is fully committed to the gender-neutral concepts that were set forth in § 1.13, the material from § 1.13 is removed since the mandate from that section is being accomplished through internal issuances.

EFFECTIVE DATE: May 31, 1996.

FOR FURTHER INFORMATION CONTACT: Kenneth Hoffman, Director, Information Resources Management, Policy and Standards Service (045A3), Department of Veterans Affairs, 810 Vermont Avenue, NW., Washington, DC 20420, (202) 273–8129.

SUPPLEMENTARY INFORMATION: This final rule consists of nonsubstantive changes and, therefore, is not subject to the notice and comment and effective date provisions of 5 U.S.C. 553.

The Secretary hereby certifies that this final rule will not have a significant economic impact on a substantial number of small entities as they are defined in the Regulatory Flexibility Act (RFA), 5. U.S.C. 601–602. This final rule would not cause a significant effect on any entities since it does not contain any substantive provisions. Therefore, pursuant to 5 U.S.C. 605(b), this amendment is exempt from the initial and final regulatory flexibility analysis requirements of sections 603 and 604.

There are no Catalog of Federal Domestic Assistance program numbers for this regulation.

List of Subjects in 38 CFR Part 1

Administrative practice and procedure, Claims, Freedom of information, Government contracts, Government employees, Government property, Reporting and recordkeeping requirements.

Approved: May 13, 1996.

Jesse Brown,

Secretary of Veterans Affairs.

For the reasons set forth in the preamble, 38 CFR part 1 is amended as set forth below:

PART 1—GENERAL PROVISIONS

1. The authority citation for part 1 continues to read as follows:

Authority: 38 U.S.C. 501(a), unless otherwise noted.

§ 1.131 [Removed]

2. The undesignated centerheading preceding § 1.13 and § 1.13 are removed.

[FR Doc. 96–13478 Filed 5–30–96; 8:45 am]

BILLING CODE 8320–01–P

DEPARTMENT OF HEALTH AND HUMAN SERVICES

Health Care Financing Administration

42 CFR Part 417

[OMC–004–F]

RIN 0938–AE64

Health Maintenance Organizations: Employer Contribution to HMOs

AGENCY: Health Care Financing Administration (HCFA), HHS.

ACTION: Final rule.

SUMMARY: This rule amends § 417.157 of the HCFA regulations, which pertains to employer contributions to health maintenance organizations (HMOs) that are included among the alternatives in health benefits plans that an employer offers to its employees.

These amendments are necessary to conform that section to changes made in section 1310(c) of the Public Health Service Act by section 7(a)(2) of the HMO Amendments of 1988.

The intent is to ensure that employees who choose the HMO alternative are not financially disadvantaged.

DATES: Effective Date: These regulations are effective on July 1, 1996.

FOR FURTHER INFORMATION, CONTACT: Marty Abeln, (410) 786–1032.

SUPPLEMENTARY INFORMATION:

I. Background

Under section 1310 of the Public Health Service (PHS) Act, the following rules apply:

- Certain public and private employers that offer health benefits plans to their employees must include the option of enrollment in qualified health maintenance organizations (HMOs) if such HMOs request inclusion and their requests meet specified conditions as to content and timing (this is known as the ''employer mandate'' provision);
- The procedures for offering the HMO option must take into account the rules of collective bargaining; and
- No employer is required to contribute more for health benefits than would be required by any prevailing collective bargaining agreement or any other legally enforceable contract between the employer and the employees for health benefits.

These provisions are implemented by subpart E of part 417 of the HCFA rules. Section 417.157 of those rules provides that—

- The employer or designee must include the HMO option in the offering on terms no less favorable, with respect

to the employer's monetary contribution or designee's cost than the terms on which the other alternatives are included; and

• An employer's contribution must be equal, in dollar amount, to the largest contribution made by that employer, on behalf of a particular employee, to a non-HMO alternative included in the plan offering.

II. Statutory Amendment

Under amendments made to section 1310 of the Public Health Service Act by section 7 of Public Law 100–517—

• If an employer offers a health benefits plan to its employees and includes an HMO as required by the mandate provisions discussed above, any employer contribution under the plan must ''not financially discriminate'' against an employee who enrolls in the HMO;

• The employer's contribution does not discriminate if the ''method of determining the contribution on behalf of all employees is reasonable and is designed to assure employees a fair choice among health benefits plans''.

• The ''employer mandate'' provision expires on October 24, 1995, and employers that voluntarily include HMOs after that date must meet the nondiscrimination standard for their contributions.

The legislative history of this provision makes clear that, while the Congress agreed that our current ''dollar for dollar'' test was consistent with previous law, the Congress now intends to give employers greater flexibility.

The committee reports accompanying Public Law 100–517 provided examples of some methods of contribution that would meet the legislative requirement. (See, for example, the report of the Senate Committee on Labor and Human Resource, Sen. Rep. No 304, 100th Cong., 2nd Sess., 9–11 (1988).) We incorporated those examples in the proposed rule at § 417.157(a)(4). We indicated that, if an employer followed one of those methods, we would not consider the contributions to be financially discriminatory.

Method 1: The employer may contribute to the HMO the same amount it contributes to the non-HMO alternative. For example, an employer that contributes $80 per month on behalf of each employee who joins an indemnity plan and pays the same amount on behalf of each employee who joins the HMO would not be discriminating.

Method 2: An employer's contributions may vary for different classes of enrollees established on the basis of attributes, such as age, sex, or family status, that are reasonable predictors of utilization, experience, costs, or risk. For each enrollee in a given class, the employer would contribute an equal dollar amount, regardless of the plan that an employee chooses. To illustrate, one such class might be single males under the age of 30. If the employer's cost for the class of single males under age 30 in an indemnity or self-insurance plan is $60, and the employer's contribution for HMO enrollment for each employee in that particular class were $60, there would be no discrimination. The employer would follow this methodology for each of the other classes. By calculating the contribution for HMO enrollment for each class in this way, the employer would determine its total payment on behalf of all employees enrolling in the HMO.

Method 3: If the employer's policy is that all employees contribute to their health benefits plan, an employer may require employees to make a reasonable minimum contribution to an HMO. We would consider an employee contribution that did not exceed 50 percent of the employee contribution to the principal non-HMO alternative to be reasonable in such a situation. To illustrate, assume that the HMO's premium is $80, the alternative plan's premium is $100, and the employer contributes $80 on behalf of each employee who participates in the alternative plan. In such a case, employees who join the HMO would have no out-of-pocket costs while employees who remain with the alternative plan would contribute $20. If the employer had a policy requiring a minimum employee contribution for health benefits, we would consider it reasonable for the employer to require employees who enroll in the lower cost plan, in this example the HMO, to pay an amount not in excess of $10, which is 50 percent of the employee contribution to the non-HMO alternative.

Method 4: An employer's contribution may be the same percentage of the premium of each alternative the employer offers. For example, if the employer pays 90 percent of the premium of each non-HMO alternative offered, we would find no discrimination if the employer pays 90 percent of the HMO premium.

Method 5: Employers and HMOs may negotiate contribution arrangements that are mutually acceptable. In negotiating those arrangements with a Federally qualified HMO, an employer may not insist on terms that would cause the HMO to violate any of the requirements for being a qualified HMO, as set forth in subparts B and C of part 417 of the HCFA rules. Any negotiated arrangements must meet the basic criteria for nondiscrimination against employees who enroll in HMOs.

Although the major thrust of the statutory amendment is to provide greater flexibility to the employer while ensuring fair choice for employees, two of the committee reports (discussed below in the response to comment #6) specify that HMOs are also protected from ''discriminatory and unfair contribution practices''.

III. Proposed Rule

On July 5, 1991, at 56 FR 30723, we published a proposed rule that would amend § 417.157 to implement the statutory change discussed above, primarily by incorporating the examples.

Also included were proposed minor amendments to those portions of § 417.107 that pertained to quality assurance and to certification of institutional providers, and the removal of an outdated requirement. No comments were received on this part of the NPRM. While this final rule was under development, the document identified as OCC–015–FC (published on July 15, 1993 at 58 FR 38062) made the proposed changes. It removed obsolete paragraph (f), redesignated paragraph (h) as paragraph (a) of § 417.106, and redesignated paragraph (i) as paragraph (h) of § 417.124.

IV. Discussion of Comments on the Proposed Rule

We received seven letters of comment; three from HMOs, two from industry associations, and one each from a law firm and a consultant. Their comments and our responses to them are discussed under several subject areas.

A. ''Contribution by Class'' Method

This is the second of the five examples listed in the proposed rule. Under this method, employers may contribute different amounts for different classes of employees classes based on factors such as age, sex, and family status.

1. *Comment:* One commenter noted that this appeared to allow differential employer contributions for male and female employees which would presumably result in different out-of-pocket costs for male and female employees. The commenter thought this would be illegal discrimination as it would violate title VII of the 1964 Civil Rights Act. In addition, the commenter questioned whether an age-based classification would violate HCFA regulations that require that employees

and spouses over age 65 be provided health coverage on the same terms as coverage for younger employees.

1. *Response:* This comment has brought to our attention that ''Method 2'', which was taken directly from the legislative history, is misleading. First, the example assumes that the employer would have differential costs by age and sex in its contributions towards *indemnity* plans, which would be reflected in its payment to HMOs. However, we understand that health insurers that contract with *employer groups* do not vary rates between men and women, or according to age, but rather develop composite rates similar to the HMO community rates, i.e.,distinguishing only between individuals and families. This, as a practical matter, makes the example in ''Method 2'' inaccurate. We are revising the regulation text accordingly.

However, we note that gender-based distinctions under an employee benefit plan *would* likely violate title VII of the Civil Rights Act of 1964, as interpreted by the Supreme Court. That statute is under the jurisdiction of the Equal Employment Opportunity Commission (EEOC), and beyond the scope of this regulation. Any questions as to whether a particular fact situation would or would not violate title VII should be directed to the EEOC.

We also note that the HCFA regulations cited by the commenter do not impose a general prohibition against age-based distinctions, but apply only to distinctions based on attainment of age 65. This implements explicit statutory language.

2. *Comment:* Two commenters were concerned that some employers may wish to use prior year data on attributes that may not be reasonable predictors of utilization, experience, costs, or risk. In order to prevent confusion on this issue, one commenter proposed adding the word ''demographic'' to the example, to read:

> An employer's contributions may reflect the demographic composition of enrollees according to attributes such as age, sex and family status* * *

2. *Response:* We do not believe that the Congress intended to limit to ''demographic factors'' the ''attributes'' employers may use in determining their contribution amount. The supporting committee reports suggest a broader concern: that employers be able to determine their contribution using a method that reflects the HMO's actual costs, so that the employers realize cost savings if their employees use fewer or less costly services. We believe that the critical language is the requirement that the attributes must be such as can reasonably be expected to predict utilization, experience, costs, and risks. Age, sex, and family status are given only as examples. In summary, if an employer can establish that a nondemographic attribute can reasonably be considered a predictor of those factors, it is acceptable. On the other hand, if an HMO can show that a particular health status factor cannot reasonably be considered to be a predictor, it is not acceptable. We do not believe it is necessary or appropriate for the regulations to elaborate further on the standard.

3. *Comment:* One commenter had additional questions about the application of nondemographic factors. He expressed concern about the validity and potential for abuse of employers' revising their HMO contribution amount on the basis of studies of health costs incurred by persons who switched from the employer's self-insured plan to an HMO, or on national data showing that HMOs receive favorable selection.

The commenter requested that HCFA provide more information about how prior use data may appropriately be used to predict future health care costs and thus be a legitimate factor in developing employer contributions by class. The commenter concluded by proposing that HCFA—

a. Establish guidelines as to the circumstances under which employers may make contribution decisions using data on prior utilization of employees who switch to an HMO, and require justification for such use;

b. Require employers to obtain prior HCFA approval for any method not allowed under the guidelines; and

c. Specify the minimum number of employees for whom data must be obtained, for the data to be considered statistically valid.

3. *Response:* As previously discussed, under the contribution by class method, any employee attribute used in an employer's contribution methodology must be one that can reasonably be expected to predict the health care utilization, experience, costs, or risk of those employees who are enrolling in the HMO. Health status attributes such as previous health care utilization and costs are generally accepted as predictors of future health care costs and are acceptable for employers to use in determining their contribution to an HMO.

The legislation requires that the employer's method for calculating the contribution be ''reasonable'' and ensure employees a ''fair choice'' among the plans offered. We believe that in order to meet the standard of being reasonable and ensuring employees a fair choice, the method of determining the employer's contribution must reflect a reasonable estimate of the cost of providing health care services for the actual enrollees of a particular HMO.

We also believe that the intent of the legislation is to provide employers with flexibility in determining their contribution methodology, as long as it meets the ''reasonable'' and ''fair choice'' standards. Therefore, we will not specify a minimum number of employees to be used in the calculations. Although we do not require prior approval, we do require the employer to make available to HCFA, upon request, information on how it calculates its contribution. If the HMO or the employees believe that the contribution does not meet the ''reasonable'' and ''fair choice'' standards, they may request that HCFA review the methodology.

4. *Comment:* Two commenters requested that HCFA provide guidance on possible exceptions to the principle that the ''contribution by class'' method should reflect the actual enrollment of each HMO.

The first commenter noted that it is not unusual for an employer to offer one or more indemnity plans and several HMOs to achieve HMO coverage over a broad enough area or for other reasons. In such cases, the commenter noted, it would be desirable for the employer to establish a single HMO contribution rate, even though the different HMOs may in fact charge different rates. To avoid compelling the employer to find a separate contribution for each HMO, the final regulations should treat the HMO contribution as acceptable if it meets the required standard with respect to any of the HMOs or with respect to the average of the HMO charges.

The second commenter was concerned that an employer might take the demographic data from all the HMOs it offered and come up with a single ''composite'' contribution amount for all of them. This commenter believed that a single ''composite'' contribution should not be allowed because the employer had not developed it on the basis of the expected demographic characteristics of the mandating HMO. The commenter noted that if the employer combines the demographic data of the mandating HMO with the data of another HMO or other health benefits plans it offers its employees, the employer would not be making an equal dollar contribution for each employee in a particular class.

4. *Response:* The basic rule is that the methodology must be reasonable and

must offer employees a fair choice among health benefit plans. As noted above, we take the position that it must reflect the actual attributes of each HMO's enrollment. It seems unlikely, for example, that an employer with employees in widely dispersed geographic areas, or in rural as well as urban areas could establish a ''composite'' contribution that would meet the standard. However, if an employer can show that in its particular situation, a composite amount would meet the standard, it could be acceptable. For example, all of the HMOs might be shown to serve the same general geographic area and attract the same type of enrollee. Absent such a showing, it would not be sufficient to meet the standard for a single HMO without considering the others.

We note that the second commenter objected to a composite contribution amount on the grounds that the employer would not be making an equal dollar contribution for all members of a particular class. Although the ''contribution by class'' method requires equal dollar amounts within each class, there could be other similar approaches that do not use equal dollar amounts but still meet the standard of reasonableness and fair choice.

B. Minimum Employee Contribution Method

5. *Comment:* One commenter suggested that example (iii), which states that the employer may require employees to contribute to the HMO an amount that does not exceed 50 percent of the employee contribution to the principal non-HMO alternative, include two additional limitations:

a. The minimum contribution requirement can be invoked only if an employee would otherwise have to pay little or nothing for the HMO plan.

b. The employee contribution may not exceed $20 per month.

5. *Response:* We agree with the commenter that the ''minimum employee contribution'' approach can be used only if the HMO coverage would otherwise be available at nominal or no cost. This is specifically stated in the legislative history and was implicit in the proposed rule. We are making it explicit in the final rule. However, we will not establish a $20 maximum because the Congress, in stating that it would be reasonable to set the limit for the required contribution at 50 percent of the contribution to the non-HMO alternative, established that amount as the maximum.

C. Miscellaneous Aspects

6. *Comment:* One commenter was concerned that the intent of the Congress that contribution arrangements not discriminate against the HMO is not evident in the regulation. The committee report language is essential to an understanding of the legislative intent. There should be a statement in the final regulation or preamble to the effect that it is not the intent of the law to allow practices that would be unfair or discriminatory to the HMO, and that such practices will not be permitted.

The commenter also suggested that the purpose of the HMO provisions and the examples set forth in the committee reports could provide a basis for HCFA to establish strict criteria for evaluating any method that results in the employer's paying less on behalf of an employee who enrolls in an HMO than on behalf of an employee who enrolls in a non-HMO alternative. The commenter urged that exceptions be narrowly construed and allowed only for compelling reasons. Otherwise, the underlying purpose for enactment of section 1310 of the PHS Act would be circumvented. The commenter recommended that we adopt the following factors as the basis for determining whether an employer contribution is reasonable and offers a fair choice:

- The method proposed by the employer must be consistent with the purposes of encouraging the effective and efficient delivery of health care services and reducing health care costs.
- Financial discrimination against employees who enroll in an HMO must be minimal and only to the extent necessary to accomplish the purposes.

Another commenter asked if a contribution method in which the employer contributed the difference between the employee contribution and the health plans' premiums resulting in employees having an equal expense whether they choose an HMO or a more expensive indemnity plan, would be prohibited by these proposed rules. The commenter stated that such a practice *clearly* discriminates in favor of the more expensive plan (typically a non-HMO plan) and thus unfairly discriminates against employees and the HMO.

6. *Response:* With respect to the first comment, section 1310(c) of the PHS Act does not mention discrimination against the HMO. The employer contribution is acceptable if it ''is reasonable and is designed to assure employees a fair choice among health benefits plans''. The legislative history cited by the commenter states that the new standard ''enhances employers' flexibility in determining their contributions to HMOs while protecting employees and HMOs from discriminatory and unfair contribution practices.'' (Sen. Rep. No. 100–304, H.R. Rep. No. 100–417) However, the fact that the statute does not contain the reference to the HMO indicates that this statement supports, at most, a balance of the interests of the three parties, with primary weight given to the employer and employee interests.

With respect to the suggestion that the HMO contribution cannot be less than the non-HMO contribution, unless it is shown to ''encourage effective and efficient delivery of health care'', we note that the legislative history clearly states that a dollar-for-dollar match is no longer required. Moreover, two of the examples provided in the legislative history *assume* that there will be an unequal contribution, and that it will be to the HMO's disadvantage. First, an employer can require employees to pay for their HMO coverage *even if the methodology would otherwise result in no cost to the employees.*

Similarly, the employer is permitted to contribute *equal percentages* of the cost for the HMO and non-HMO options. Under this method, an employer can contribute far more, in terms of dollars, for the non-HMO option than for the HMO option. For example, if the HMO costs $100 per month, and the indemnity plan costs $300, and the employer pays 90 percent of the cost, it will pay $90 for an employee who chooses an HMO, and $270 for an employee who chooses the indemnity plan. (For the employee, the difference between the two options is only $20.)

Therefore, we see no justification for imposing a stricter standard simply because the employer pays less for the HMO than the non-HMO option. In addition, the commenter's proposed ''efficiency and cost effectiveness'' standard is neither required by the statutory amendment nor, arguably, supported by its legislative history. The latter states only that section 1310 was designed to give employees an opportunity to choose an HMO alternative. It does not mention efficiency and cost effectiveness.

Finally, with respect to determinations that result in equal employee contributions for all alternatives, we believe that this approach is clearly one way to provide a ''fair choice'' to employees. Under this approach, employees can choose the health plan that best serves their needs. The commenter's primary concern seems to be that this approach is unfair

to employees if they cannot ''share in the savings'' of choosing an HMO. We note, first, that ''fairness'' is a subjective standard. As long as an approach can reasonably be viewed as fair, it satisfies the standard. That judgment is not invalidated simply because there may be a basis for characterizing it as unfair.

We note further that the legislative history makes clear that the amendment was, to a large extent, prompted by a concern that the HMOs were engaging in ''shadow pricing''. Under shadow pricing, the HMOs would charge the same premium as more expensive non-HMO alternatives instead of passing the savings along to either the employer *or* the employee. Therefore, the argument that equal employee contributions are unfair because employees cannot ''share in the savings'' (from choosing a lower cost HMO) is not compelling.

7. *Comment:* One commenter noted that § 417.157(a)(2) lists five contribution methods as acceptable, but there are no examples of unacceptable methods. Several commenters asked for more guidance to assist them in determining what would be acceptable.

Another commenter strongly suggested that the proposed rules be amended to provide examples of types of arrangements that would be considered to be discriminatory, and therefore prohibited, by these regulations.

7. *Response:* The employer contribution requirements provide employers enhanced flexibility in determining their contributions to HMOs and other health benefits plans they offer. The limits on that flexibility are established by the statutory language which requires that the method of determining the contribution be reasonable and not discriminate financially against employees who choose to join an HMO. In part, this new flexibility is recognition that HMOs need less regulatory protection because in recent years they have become more accepted by both employers and employees and are generally better able to compete with other health benefits plans.

As previously stated, if the HMO or the employees believe that the employer's contribution does not meet the ''reasonable'' and ''fair choice'' standards, they may request that HCFA review the methodology. Generally, HCFA will not undertake a review if the employer has followed one of the examples given in the regulation.

If the employer uses a methodology other than one of those examples, HCFA generally will not review unless the methodology results in significantly higher costs for employees who select the HMO alternative. If it undertakes review, HCFA will consider whether the employer's methodology is based on factors that are reasonable and are applied fairly. For example, if the HMO has a more comprehensive benefits package than the principle indemnity plan, that could be a reasonable factor justifying a higher cost for employees who enroll in the HMO.

We will not attempt to define all possible reasonable explanations that would justify a larger contribution from HMO enrollees. We note however, that the rationale must apply to the actual employees of the particular HMOs.

8. *Comment:* One of the commenters, while agreeing that employers can now make unequal contributions, stated that the right to make unequal contributions should require substantial justification, be narrowly construed, and allowed only for compelling reasons.

8. *Response:* We believe such stringent requirements are not in keeping with the flexibility the Congress intended employers to have. As noted below under Changes in the Regulations, the final rule requires the employer to make available to HCFA, upon request, a description of the methodology it used to determine its contributions, and related data on the eligible employee population. HCFA may request the data on its own initiative or because an HMO or employee requests HCFA to review the methodology.

A contribution methodology that results in different contributions to different plans in order to ensure that employees have the same out-of-pocket costs, no matter which plan they choose, is consistent with the standards and would, therefore, be acceptable.

9. *Comment:* One commenter suggested that any method that does not fall into one of the first four examples provided in the regulation should be required to fall into the fifth example—the method must be mutually acceptable to both the employer and the HMO.

9. *Response:* The five examples of acceptable contribution methods listed under § 417.157(a)(2) are not meant to be exclusive. We note that the intent of the legislation is to allow employers increased flexibility in determining their contribution payment amounts. Accordingly, we will not restrict feasible contribution methodologies beyond the requirements already described.

10. *Comment:* One commenter noted that the last of the five examples under § 417.157(a)(2) allows for employers and HMOs to negotiate contribution arrangements that are mutually acceptable. The commenter goes on to ask if such mutually-agreed-upon arrangements must also meet the statutory standards of the proposed employer contribution regulation.

10. *Response:* Contribution levels that are mutually agreed upon by the employer and the HMO must also meet the standards established by this regulation.

V. Changes in the Regulations

A. Changes Required by the Expiration of the ''Employer Mandate'' Provisions Effective October 24, 1995

In § 417.151, we have revised paragraphs (a) and (e) to make clear that, effective October 24, 1995, inclusion of the HMO alternative in an employer's health benefits plan became optional.

We have removed §§ 417.152 and 417.154 because they would no longer be applicable.

In § 417.153, we have revised paragraph (a) to make paragraphs (b) and (c) applicable when an employing entity voluntarily includes one or more HMOs in its health plan offerings.

We have revised § 417.159 to make clear that inclusion of HMOs is at the employing entity's option.

B. Changes to Implement Statutory Amendments That Were Effective Upon Enactment.

In § 417.157, we have—

- Revised paragraphs (a)(1) and (a)(2) to eliminate the ''equal contribution'' requirement and to incorporate the criteria specified in the statute;
- Revised paragraph (a)(3) to remove the requirement for increased contribution to the HMO and to give examples of contributions that would be considered nondiscriminatory;
- Added a paragraph (a)(4) ''Adjustment of employer contribution'' to make clear that what appeared in the proposed rule as a third ''method'' is rather a general rule applicable, under specified circumstances, to a contribution determined by any acceptable method. Adjustment is permitted only when HMO enrollees would, otherwise, have to pay little or nothing at all because the HMO premium is lower than the premiums of other plans offered. The payment by the enrollee could not exceed 50 percent of the payment for the principal non-HMO alternative, that is, the alternative that covers the largest number of the employer's employees.
- Removed paragraphs (f) and (g) as inconsistent with the revised policy; and
- In response to certain comments, revised the content of paragraph (h) and redesignated it under new paragraphs (f) and (g).

VI. Regulatory Impact Statement

Consistent with the Regulatory Flexibility Act (RFA) and section 1102(b) of the Social Security Act, we prepare a regulatory flexibility analysis for each rule, unless the Secretary certifies that the particular rule will not have a significant economic impact on a substantial number of small entities, or a significant impact on the operations of a substantial number of small rural hospitals.

The RFA defines ''small entity'' as a small business, a nonprofit enterprise, or a governmental jurisdiction (such as a county, city, or township) with a population of less than 50,000. We also consider all HMOs to be small entities. For purposes of section 1102(b) of the Act, we define ''small rural hospital'' as a hospital that has fewer than 50 beds and is located anywhere but in a metropolitan statistical area.

For reasons noted below, we believe that any economic impact of the statutory provisions on which this rule is based will be small and transitory.

Effective as of October 24, 1995, inclusion of HMOs in employer health plan offerings became voluntary.

Employers that do include HMOs are no longer held to the previous ''dollar for dollar'' rule. An employer could, for example, base its contribution to an HMO on a reasonable estimate of what it will cost to provide care for its employees, and thus share in the savings resulting from efficient delivery of health care by the HMO.

However, the employer's contribution must meet new standards, that is, it must be an amount that is ''reasonable'' and that ensures employees a ''fair choice'' among health plan alternatives offered. This balanced approach means that, while employers benefit from greater flexibility, employees—and the HMOs they are free to join, are protected against discrimination.

We have not prepared a regulatory flexibility analysis because we have determined, and the Secretary certifies, that these rules will not have a significant economic impact on a substantial number of small entities or a significant impact on the operation of a substantial number of small rural hospitals.

In accordance with Executive Order 12866, this rule was reviewed by the Office of Management and Budget.

VII. Collection of Information Requirements

This rule contains new information collections that are subject to review by the Office of Management (OMB) under the Paperwork Reduction Act of 1995 (44 U.S.C. 3501 through 3511). The title and description of the information collection and the description of respondents are shown below with an estimate of the annual reporting and recordkeeping burden.

§ 417.157(f): *Retention and availability of data,* is revised to specify that each employing entity or designee must retain the plan data for three years and make it available to HCFA upon request. The data must be that used to compute the level of contribution for each of the plans offered to employees, a description of the methodology for computing the level of contribution, and any related data about the employees who are eligible to enroll in a plan.

§ 417.157(g): *HCFA review of data,* is revised to make clear that HCFA may request and review the data specified in paragraph (f) of this section on its own initiative or in response to requests from HMOs or employees. The purpose of HCFA's review is to determine whether the methodology and the level of contribution comply with the requirements of this subpart. HMOs and employees that request HCFA to review the plan data must set forth reasonable grounds for making the request.

The respondents affected by section 417.157, paragraphs (f) and (g) are public and private employers and employees.

The burden under paragraphs (f) and (g) of section 417.157 is estimated at 8 to 10 hours per employer for compiling the data, usually once a year, and making it available to HCFA when requested.

The agency has submitted a copy of this rule to OMB for its review of these information collections. When OMB approves these provisions, we will publish a notice in the Federal Register to that effect.

We invite comments regarding this burden estimate or any other aspect of these collections of information, including any of the following:

- Whether the information collection is necessary and useful for carrying out the proper functions of the agency;
- the accuracy of the estimated burden;
- ways to enhance the quality, clarity, and usefulness of the information to be collected; and,
- recommendations for using automated collection techniques or other forms of information technology to minimize the information collection burden.

Please send any comments to HCFA, OFHR, MPAS, C2–26–17, 7500 Security Boulevard, Baltimore, Maryland 21244–1850.

List of Subjects in 42 CFR Part 417

Administrative practice and procedure, Grant programs-health, Health care, Health facilities, Health insurance, Health maintenance organizations (HMO), Loan programs-health, Medicare, Reporting and recordkeeping requirements.

42 CFR Part 417 is amended as set forth below:

1. The authority citation for part 417 continues to read as follows:

Authority: Secs. 1102 and 1871 of the Social Security Act (42 U.S.C. 1302 and 1395hh); secs. 1301, 1306, and 1310 of the Public Health Services Act (42 U.S.C. 300e, 300e–5, and 300e–9); and 31 U.S.C. 9701.

2. § 417.151 is amended to revise paragraphs (a) and (e) to read as follows:

§ 417.151 Applicability.

(a) *Basic rule.* Effective October 24, 1995 [1], this subpart applies to any employing entity that offers a health benefits plan to its employees, meets the conditions specified in paragraphs (b) through (e) of this section, and elects to include one or more qualified HMOs in the health plan alternatives it offers its employees.

* * * * *

(e) *Employees in HMO's service area.* At least 25 of the employing entity's employees reside within the HMO's service area.

§ 417.152 [Removed]

3. Section 417.152 is removed.

4. Section 417.153 is amended to revise the heading and paragraph (a) to read as follows:

§ 417.153 Offer of HMO alternative.

(a) *Basic rule.* An employing entity that is subject to this subpart and that elects to include one or more qualified HMOs must offer the HMO alternative in accordance with this section.

* * * * *

§ 417.154 [Removed]

5. Section 417.154 is removed.

6. Section 417.157 is revised to read as follows:

§ 417.157 Contributions for the HMO alternative.

(a) *General principles*—(1) *Nondiscrimination.* The employer contribution to an HMO must be in an amount that does not discriminate financially against an employee who

[1] Before October 24, 1995, an employing entity that met the conditions specified in § 417.151 was required to include one or more qualified HMOs, if it received from at least one qualified HMO a written request for inclusion and that request met the timing, content, and procedural requirements specified in § 417.152.

enrolls in an HMO. A contribution does not discriminate financially if the method of determining the contribution is reasonable and is designed to ensure that employees have a fair choice among health benefits plan alternatives.

(2) *Effect of agreements or contracts.* The employing entity or designee is not required to pay more for health benefits as a result of offering the HMO alternative than it would otherwise be required to pay under a collective bargaining agreement or contract that provides for health benefits and is in effect at the time the HMO alternative is included.

(3) *Examples of acceptable employer contributions.* The following are methods that are considered nondiscriminatory:

(i) The employer contribution to the HMO is the same, per employee, as the contribution to non-HMO alternatives.

(ii) The employer contribution reflects the composition of the HMO's enrollment in terms of enrollee attributes that can reasonably be used to predict utilization, experience, costs, or risk. For each enrollee in a given class established on the basis of those attributes, the employer contributes an equal amount, regardless of the health benefits plan chosen by the employee.

(iii) The employer contribution is a fixed percentage of the premium for each of the alternatives offered.

(iv) The employer contribution is determined under a mutually acceptable arrangement negotiated by the HMO and the employer. In negotiating the arrangement, the employer may not insist on terms that would cause the HMO to violate any of the requirements of this part.

(4) *Adjustment of employer contribution.* An employer contribution determined by an acceptable method may in some cases be adjusted if it would result in a nominal payment or no payment at all by HMO enrollees (because the HMO premium is lower than the premiums for the other alternatives offered). If, for example the employer has a policy of requiring all employees to contribute to their health benefits plan, the employer may require HMO enrollees who would otherwise pay little or nothing at all, to make a payment that does not exceed 50 percent of the employee contribution to the principal non-HMO alternative. The principal non-HMO alternative is the one that covers the largest number of enrollees from the particular employer.

(b) *Administrative expenses.* (1) In determining the amount of its contribution to the HMO, the employing entity or designee may not consider administrative expenses incurred in connection with offering any alternative in the health benefits plan.

(2) However, if the employing entity or designee has special requirements for other than standard solicitation brochures and enrollment literature, it must, in the case of the HMO alternative, determine and distribute any administrative costs attributable to those requirements in a manner consistent with its method of determining and distributing those costs for the non-HMO alternatives.

(c) *Exclusion for contribution for certain benefits.* In determining the amount of the employing entity's contribution or the designee's cost for the HMO alternative, the employing entity or designee may exclude those portions of the contribution allocable to benefits (such as life insurance or insurance for supplemental health benefits)—

(1) For which eligible employees and their eligible dependents are covered notwithstanding selection of the HMO alternative; and

(2) That are not offered on a prepayment basis by the HMO to the employing entity's employees.

(d) *Contributions determined by agreements or contracts or by law.* If the specific amount of the employing entity's contribution for health benefits is fixed by an agreement or contract, or by law, that amount constitutes the employing entity's obligation for contribution toward the HMO premiums.

(e) *Allocation of portion of a contribution determined by an agreement.* In some cases, the employing entity's contribution for health benefits is determined by an agreement that also provides for benefits other than health benefits. In that case, the employing entity must determine, or instruct its designee to determine, what portion of its contribution is applicable to health benefits.

(f) *Retention and availability of data.* Each employing entity or designee must retain the following data for three years and make it available to HCFA upon request:

(1) The data used to compute the level of contribution for each of the plans offered to employees.

(2) Related data about the employees who are eligible to enroll in a plan.

(3) A description of the methodology for computation.

(g) *HCFA review of data.* (1) HCFA may request and review the data specified in paragraph (f) of this section on its own initiative or in response to requests from HMOs or employees.

(2) The purpose of HCFA's review is to determine whether the methodology and the level of contribution comply with the requirements of this subpart.

(3) HMOs and employees that request HCFA to review must set forth reasonable grounds for making the request.

7. In § 417.155(d)(2) introductory text, ''which'' is removed and ''that'' is added in its place.

8. In § 417.159, ''The obligation'' is revised to read ''The decision'', and ''HMO option'' is revised to read ''HMO alternative''.

9. In the heading of § 417.164, ''qualifiers'' is removed and ''qualification'' is added in its place.

10. In § 417.166(a)(1), ''change'' is removed and ''changed'' is added in its place.

(Catalog of Federal Domestic Assistance Program No. 93.773, Medicare—Hospital Insurance; and Program No. 93.774, Medicare—Supplementary Medical Insurance Program)

Dated: August 14, 1995.

Bruce C. Vladeck,

Administrator, Health Care Financing Administration.

Dated: December 5, 1995.

Donna E. Shalala,

Secretary.

[FR Doc. 96–13629 Filed 5–30–96; 8:45 am]

BILLING CODE 4120–01–P

DEPARTMENT OF TRANSPORTATION

National Highway Traffic Safety Administration

49 CFR Part 571

[Docket No. 96–050; Notice 1]

RIN 2127–AG31

Federal Motor Vehicle Safety Standards; Air Brake Systems

AGENCY: National Highway Traffic Safety Administration (NHTSA), DOT.

ACTION: Final rule; technical amendment.

SUMMARY: This document revises Standard No. 121, *Air brake systems* to remove obsolete provisions and to update and reorganize the standard. This revision substantially clarifies and simplifies this safety standard without changing any of its substantive requirements.

EFFECTIVE DATE: This rule is effective March 1, 1997.

FOR FURTHER INFORMATION CONTACT: Mr. Richard Carter, Office of Vehicle Safety Standards, NPS–11, National Highway Traffic Safety Administration, 400 Seventh Street, SW., Washington, DC

20590. Telephone: (202) 366–5274. Fax: (202) 366–4329. For legal issues: Mr. Marvin L. Shaw, Office of Chief Counsel, NCC–20, National Highway Traffic Safety Administration, 400 Seventh Street, SW., Washington, DC 20590. Telephone: (202) 366–2992.

SUPPLEMENTARY INFORMATION: Pursuant to the March 4, 1995, directive, ''Regulatory Reinvention Initiative,'' from the President to the heads of departments and agencies, the National Highway Traffic Safety Administration (NHTSA) has undertaken a review of all its regulations and directives. During the course of this review, the agency identified several regulations that are potential candidates for amendment.

One of these regulations is Standard No. 121, *Air brake systems.* There are two major types of changes. The first type of change involves deleting obsolete provisions. For example, S5.3.3.2 of current Standard No. 121 sets forth optional requirements about brake actuation time for systems manufactured before May 3, 1991. Similarly, S6.1.8.1(a) sets forth an optional burnish procedure for vehicles manufactured before September 1, 1994. The second type of change involves updating the Code of Federal Regulations to include the agency's recent amendments to Standard No. 121. For instance, on March 10, 1995, NHTSA amended Standard No. 121 to require air braked vehicles to be equipped with antilock brake systems and to reinstate stopping distance requirements. (60 FR 13216). Portions of these amendments were subsequently revised on December 13, 1995, (60 FR 63965) and February 15, 1996, (61 FR 2412). Today's notice contains the agency's most recent amendments of these provisions. In removing obsolete provisions and updating the standard, the agency's goal is to clarify and simplify Standard No. 121, without changing any of its substantive requirements.

This rulemaking action responds to petitions for reconsideration addressing the agency's antilock brake system rulemaking in which the Heavy Duty Brake Manufacturers Council (HDBMC), the American Automobile Manufacturers Association (AAMA), and Midland-Grau requested that the agency publish a complete and updated version of Standard No. 121.

In rewriting Standard No. 121, a significant issue was what effective date to select. A number of new requirements for Standard No. 121 will take effect in the next few years. Of particular note, the requirements for antilock brake systems and for stopping distance tests are being phased in for various vehicle types (e.g., truck tractors, trailers, and single unit vehicles) between March 1, 1997, and March 1, 1998. As a result of these new amendments, the standard's requirements vary significantly for different dates over the next two years.

After examining the current standard, NHTSA has concluded that clarifying and simplifying Standard No. 121 can best be accomplished by selecting an effective date of March 1, 1997, the date when truck tractors must first comply with the new antilock brake system and stopping distance requirements. Most of the changes in the regulatory text delete obsolete requirements and provisions which are, or will be, irrelevant by March 1, 1997.

This rulemaking action results in a more straightforward Standard No. 121 that will take mandatory effect on March 1, 1997, with optional compliance for vehicles manufactured before that date. Manufacturers and other interested persons should continue to consult the current Standard No. 121 concerning the additional compliance options that are available before that date. While the existing standard is longer and more complex than desirable, it is well understood by the industry. Moreover, it is not clear that any effort to rewrite Standard No. 121 for an earlier effective date could be successful in achieving the goal of a substantially clarified and simpler standard, given the many additional complex provisions that would have to be retained.

The rewritten Standard No. 121 is organized as follows:

S1. Scope.
S2. Purpose.
S3. Application.
S4. Definitions.
S5. Requirements.
S5.1 Required equipment for trucks and buses.
S5.2 Required equipment for trailers.
S5.3 Service brakes—road tests.
S5.4 Service brakes—dynamometer tests.
S5.5 Service brakes—antilock systems.
S5.6 Parking brakes.
S5.7 Emergency brakes for trucks and buses.
S5.8 Emergency brakes for trailers.
S5.9 Final inspection.
S6. Conditions.
S6.1 Road test conditions.
S6.2 Dynamometer test conditions.

Rulemaking Analyses and Notices

Executive Order 12866 and DOT Regulatory Policies and Procedures

NHTSA has considered the impact of this rulemaking action under E.O. 12866 and the Department of Transportation's regulatory policies and procedures. This rulemaking document was not reviewed under E.O. 12866, ''Regulatory Planning and Review.'' This action has been determined to be not ''significant'' under the Department of Transportation's regulatory policies and procedures.

The purpose of this rewrite is to clarify and simplify the requirements of Standard No. 121. This rewrite does not substantively change the requirements of the standard. This means that the rulemaking will not have any impacts on safety or the compliance costs for manufacturers. Accordingly, a full regulatory evaluation has not been prepared for this rulemaking.

Regulatory Flexibility Act

NHTSA has also considered the effects of this regulatory action under the Regulatory Flexibility Act. I hereby certify that this rulemaking will not have a significant economic impact on a substantial number of small entities. For the reasons stated above, simplifying and clarifying Standard No. 121 will not result in any economic impacts on those vehicle manufacturers that are small entities. Further, since no cost changes are associated with this rulemaking, small organizations and small governmental entities should not be affected in their capacity as purchasers of new vehicles.

National Environmental Policy Act

NHTSA has analyzed this rulemaking for the purposes of the National Environmental Policy Act and determined that it has no significant impact on the quality of human life.

Executive Order 12612 (Federalism)

NHTSA has analyzed this rulemaking in accordance with the principles and criteria set forth in Executive Order 12612. NHTSA has determined that this rulemaking does not have sufficient federalism implications to warrant the preparation of a Federalism Assessment.

Civil Justice Reform

This rule will not have any retroactive effect. Under 49 U.S.C. 30103, whenever a Federal motor vehicle safety standard is in effect, a State may not adopt or maintain a safety standard applicable to the same aspect of performance which is not identical to the Federal standard, except to the extent that the state requirement imposes a higher level of performance and applies only to vehicles procured for the State's use. 49 U.S.C. 30161 sets forth a procedure for judicial review of final rules establishing, amending or revoking Federal motor vehicle safety standards. That section does not require submission of a petition for

reconsideration or other administrative proceedings before parties may file suit in court.

List of Subjects in 49 CFR Part 571

Imports, Motor vehicle safety, Motor vehicles, Rubber and rubber products, Tires.

In consideration of the foregoing, NHTSA amends 49 CFR Part 571 as follows:

PART 571 —FEDERAL MOTOR VEHICLE SAFETY STANDARDS

1. The authority citation for Part 571 continues to read as follows:

Authority: 49 U.S.C. 322, 30111, 30115, 30117, and 30166; delegation of authority at 49 CFR 1.50.

2. Section 571.121 is revised to read as follows:

§ 571.121 Standard No. 121; Air brake systems.

S1. *Scope.* This standard establishes performance and equipment requirements for braking systems on vehicles equipped with air brake systems.

S2. *Purpose.* The purpose of this standard is to insure safe braking performance under normal and emergency conditions.

S3. *Application.* This standard applies to trucks, buses, and trailers equipped with air brake systems. However, it does not apply to:

(a) Any trailer that has a width of more than 102.36 inches with extendable equipment in the fully retracted position and is equipped with two short track axles in a line across the width of the trailer.

(b) Any vehicle equipped with an axle that has a gross axle weight rating (GAWR) of 29,000 pounds or more;

(c) Any truck or bus that has a speed attainable in 2 miles of not more than 33 mph;

(d) Any truck that has a speed attainable in 2 miles of not more than 45 mph, an unloaded vehicle weight that is not less than 95 percent of its gross vehicle weight rating (GVWR), and no capacity to carry occupants other than the driver and operating crew;

(e) Any trailer that has a GVWR of more than 120,000 pounds and whose body conforms to that described in the definition of heavy hauler trailer set forth in S4;

(f) Any trailer that has an unloaded vehicle weight which is not less than 95 percent of its GVWR; and

(g) Any load divider dolly.

S4. *Definitions.*

Agricultural commodity trailer means a trailer that is designed to transport bulk agricultural commodities in off-road harvesting sites and to a processing plant or storage location, as evidenced by skeletal construction that accommodates harvest containers, a maximum length of 28 feet, and an arrangement of air control lines and reservoirs that minimizes damage in field operations.

Air brake system means a system that uses air as a medium for transmitting pressure or force from the driver control to the service brake, including an air-over-hydraulic brake subsystem, but does not include a system that uses compressed air or vacuum only to assist the driver in applying muscular force to hydraulic or mechanical components.

Air-over-hydraulic brake subsystem means a subsystem of the air brake system that uses compressed air to transmit a force from the driver control to a hydraulic brake system to actuate the service brakes.

Antilock brake system or *ABS* means a portion of a service brake system that automatically controls the degree of rotational wheel slip during braking by:

(1) Sensing the rate of angular rotation of the wheels;

(2) Transmitting signals regarding the rate of wheel angular rotation to one or more controlling devices which interpret those signals and generate responsive controlling output signals; and

(3) Transmitting those controlling signals to one or more modulators which adjust brake actuating forces in response to those signals.

Auto transporter means a truck and a trailer designed for use in combination to transport motor vehicles, in that the towing vehicle is designed to carry cargo at a location other than the fifth wheel and to load this cargo only by means of the towed vehicle.

Common diaphragm means a single brake chamber diaphragm which is a component of the parking, emergency, and service brake systems.

Container chassis trailer means a semitrailer of skeleton construction limited to a bottom frame, one or more axles, specially built and fitted with locking devices for the transport of intermodal shipping containers, so that when the chassis and container are assembled, the units serve the same function as an over the road trailer.

Directly controlled wheel means a wheel for which the degree of rotational wheel slip is sensed, either at that wheel or on the axle shaft for that wheel and corresponding signals are transmitted to one or more modulators that adjust the brake actuating forces at that wheel. Each modulator may also adjust the brake actuating forces at other wheels that are on the same axle or in the same axle set in response to the same signal or signals.

Full-treadle brake application means a brake application in which the treadle valve pressure in any of the valve's output circuits reaches 85 pounds per square inch (psi) within 0.2 seconds after the application is initiated, or in which maximum treadle travel is achieved within 0.2 seconds after the application is initiated.

Heavy hauler trailer means a trailer which has one or more of the following characteristics, but which is not a container chassis trailer:

(1) Its brake lines are designed to adapt to separation or extension of the vehicle frame; or

(2) Its body consists only of a platform whose primary cargo-carrying surface is not more than 40 inches above the ground in an unloaded condition, except that it may include sides that are designed to be easily removable and a permanent ''front end structure'' as that term is used in § 393.106 of this title.

Independently controlled wheel means a directly controlled wheel for which the modulator does not adjust the brake actuating forces at any other wheel on the same axle.

Indirectly controlled wheel means a wheel at which the degree of rotational wheel slip is not sensed, but at which the modulator of an antilock braking system adjusts its brake actuating forces in response to signals from one or more sensed wheel(s).

Initial brake temperature means the average temperature of the service brakes on the hottest axle of the vehicle 0.2 mile before any brake application in the case of road tests, or 18 seconds before any brake application in the case of dynamometer testing.

Intermodal shipping container means a reusable, transportable enclosure that is especially designed with integral locking devices for securing the container to the trailer to facilitate the efficient and bulk shipping and transfer of goods by, or between various modes of transport, such as highway, rail, sea and air.

Load divider dolly means a trailer composed of a trailer chassis and one or more axles, with no solid bed, body, or container attached, and which is designed exclusively to support a portion of the load on a trailer or truck excluded from all the requirements of this standard.

Maximum drive-through speed means the highest possible constant speed at which the vehicle can be driven through 200 feet of a 500-foot radius curve arc without leaving the 12-foot lane.

Maximum treadle travel means the distance that the treadle moves from its position when no force is applied to its position when the treadle reaches a full stop.

Peak friction coefficient or *PFC* means the ratio of the maximum value of braking test wheel longitudinal force to the simultaneous vertical force occurring prior to wheel lockup, as the braking torque is progressively increased.

Pulpwood trailer means a trailer that is designed exclusively for harvesting logs or pulpwood and constructed with a skeletal frame with no means for attachment of a solid bed, body, or container, and with an arrangement of air control lines and reservoirs designed to minimize damage in off-road operations.

Straddle trailer means a trailer that is designed to transport bulk agricultural commodities from the harvesting location as evidenced by a framework that is driven over the cargo and lifting arms that suspend the cargo for transit.

Wheel lockup means 100 percent wheel slip.

S5. *Requirements.* Each vehicle shall meet the following requirements under the conditions specified in S6.

S5.1 *Required equipment for trucks and buses.* Each truck and bus shall have the following equipment:

S5.1.1 *Air compressor.* An air compressor of sufficient capacity to increase air pressure in the supply and service reservoirs from 85 psi to 100 psi when the engine is operating at the vehicle manufacturer's maximum recommended r.p.m. within a time, in seconds, determined by the quotient (Actual reservoir capacity x 25) / Required reservoir capacity.

S5.1.1.1 *Air compressor cut-in pressure.* The air compressor governor cut-in pressure shall be 100 psi or greater.

S5.1.2 *Reservoirs.* One or more service reservoir systems, from which air is delivered to the brake chambers, and either an automatic condensate drain valve for each service reservoir or a supply reservoir between the service reservoir system and the source of air pressure.

S5.1.2.1 The combined volume of all service reservoirs and supply reservoirs shall be at least 12 times the combined volume of all service brake chambers. For each brake chamber type having a full stroke at least as great as the first number in Column 1 of Table V, but no more than the second number in Column 1 of Table V, the volume of each brake chamber for purposes of calculating the required combined service and supply reservoir volume shall be either that specified in Column 2 of Table V or the actual volume of the brake chamber at maximum travel of the brake piston or pushrod, whichever is lower. The volume of a brake chamber not listed in Table V is the volume of the brake chamber at maximum travel of the brake piston or pushrod. The reservoirs of the truck portion of an auto transporter need not meet this requirement for reservoir volume.

S5.1.2.2 Each reservoir shall be capable of withstanding an internal hydrostatic pressure of five times the compressor cutout pressure or 500 psi, whichever is greater, for 10 minutes.

S5.1.2.3 Each service reservoir system shall be protected against loss of air pressure due to failure or leakage in the system between the service reservoir and the source of air pressure, by check valves or equivalent devices whose proper functioning can be checked without disconnecting any air line or fitting.

S5.1.2.4 Each reservoir shall have a condensate drain valve that can be manually operated.

S5.1.3 *Towing vehicle protection system.* If the vehicle is intended to tow another vehicle equipped with air brakes, a system to protect the air pressure in the towing vehicle from the effects of a loss of air pressure in the towed vehicle.

S5.1.4 *Pressure gauge.* A pressure gauge in each service brake system, readily visible to a person seated in the normal driving position, that indicates the service reservoir system air pressure. The accuracy of the gauge shall be within plus or minus 7 percent of the compressor cut-out pressure.

S5.1.5 *Warning signal.* A signal, other than a pressure gauge, that gives a continuous warning to a person in the normal driving position when the ignition is in the ''on'' (''run'') position and the air pressure in the service reservoir system is below 60 psi. The signal shall be either visible within the driver's forward field of view, or both audible and visible.

S5.1.6 *Antilock brake system.*

S5.1.6.1(a) Each single-unit vehicle manufactured on or after March 1, 1998, shall be equipped with an antilock brake system that directly controls the wheels of at least one front axle and the wheels of at least one rear axle of the vehicle. Wheels on other axles of the vehicle may be indirectly controlled by the antilock brake system.

(b) Each truck tractor manufactured on or after March 1, 1997, shall be equipped with an antilock brake system that directly controls the wheels of at least one front axle and the wheels of at least one rear axle of the vehicle, with the wheels of at least one axle being independently controlled. Wheels on other axles of the vehicle may be indirectly controlled by the antilock brake system. A truck tractor shall have no more than three wheels controlled by one modulator.

S5.1.6.2 *Antilock malfunction signal and circuit.*

(a) Each truck tractor manufactured on or after March 1, 1997, and each single unit vehicle manufactured on or after March 1, 1998, shall be equipped with an indicator lamp, mounted in front of and in clear view of the driver, which is activated whenever there is a malfunction that affects the generation or transmission of response or control signals in the vehicle's antilock brake system. The indicator lamp shall remain activated as long as such a malfunction exists, whenever the ignition (start) switch is in the ''on'' (''run'') position, whether or not the engine is running. Each message about the existence of such a malfunction shall be stored in the antilock brake system after the ignition switch is turned to the ''off'' position and automatically reactivated when the ignition switch is again turned to the ''on'' (''run'') position. The indicator lamp shall also be activated as a check of lamp function whenever the ignition is turned to the ''on'' (''run'') position. The indicator lamp shall be deactivated at the end of the check of lamp function unless there is a malfunction or a message about a malfunction that existed when the key switch was last turned to the ''off'' position.

(b) Each truck tractor manufactured on or after March 1, 2001, and each single unit vehicle manufactured on or after March 1, 2001, that is equipped to tow another air-braked vehicle, shall be equipped with an electrical circuit that is capable of transmitting a malfunction signal from the antilock brake system(s) on one or more towed vehicle(s) (e.g., trailer(s) and dolly(ies)) to the trailer ABS malfunction lamp in the cab of the towing vehicle, and shall have the means for connection of this electrical circuit to the towed vehicle. Each such truck tractor and single unit vehicle shall also be equipped with an indicator lamp, separate from the lamp required in S5.1.6.2(a), mounted in front of and in clear view of the driver, which is activated whenever the malfunction signal circuit described above receives a signal indicating an ABS malfunction on one or more towed vehicle(s). The indicator lamp shall remain activated as long as an ABS malfunction signal from one or more towed vehicle(s) is present, whenever the ignition (start) switch is in the ''on'' (''run'') position, whether or

not the engine is running. The indicator lamp shall also be activated as a check of lamp function whenever the ignition is turned to the ''on'' (''run'') position. The indicator lamp shall be deactivated at the end of the check of lamp function unless a trailer ABS malfunction signal is present.

S5.1.6.3 *Antilock power circuit for towed vehicles.* Each truck tractor manufactured on or after March 1, 1997, and each single unit vehicle manufactured on or after March 1, 1998, that is equipped to tow another air-braked vehicle shall be equipped with one or more electrical circuits that provide continuous power to the antilock system on the towed vehicle or vehicles whenever the ignition (start) switch is in the ''on'' (''run'') position. Such a circuit shall be adequate to enable the antilock system on each towed vehicle to be fully operable.

S5.1.7 *Service brake stop lamp switch.* A switch that lights the stop lamps when the service brake control is statically depressed to a point that produces a pressure of 6 psi or less in the service brake chambers.

S5.1.8 *Brake distribution and automatic adjustment.* Each vehicle shall be equipped with a service brake system acting on all wheels.

(a) *Brake adjuster.* Wear of the service brakes shall be compensated for by means of a system of automatic adjustment. When inspected pursuant to S5.9, the adjustment of the service brakes shall be within the limits recommended by the vehicle manufacturer.

(b) *Brake indicator.* For each brake equipped with an external automatic adjustment mechanism and having an exposed pushrod, the condition of service brake under-adjustment shall be displayed by a brake adjustment indicator that is discernible when viewed with 20/40 vision from a location adjacent to or underneath the vehicle, when inspected pursuant to S5.9.

S5.2 *Required equipment for trailers.* Each trailer shall have the following equipment:

S5.2.1 *Reservoirs.* One or more reservoirs to which the air is delivered from the towing vehicle.

S5.2.1.1 The total volume of each service reservoir shall be at least eight times the combined volume of all service brake chambers serviced by that reservoir. For each brake chamber type having a full stroke at least as great as the first number in Column 1 of Table V, but no more than the second number in column 1, the volume of each brake chamber for purposes of calculating the required total service reservoir volume shall be either the number specified in Column 2 of Table V or the actual volume of the brake chamber at maximum travel of the brake piston or pushrod, whichever is lower. The volume of a brake chamber not listed in Table V is the volume of the brake chamber at maximum travel of the brake piston or pushrod. The reservoirs on a heavy hauler trailer and the trailer portion of an auto transporter need not meet this requirement for reservoir volume.

S5.2.1.2 Each reservoir shall be capable of withstanding an internal hydrostatic pressure of 500 psi for 10 minutes.

S5.2.1.3 Each reservoir shall have a condensate drain valve that can be manually operated.

S5.2.1.4 Each service reservoir shall be protected against loss of air pressure due to failure or leakage in the system between the service reservoir and its source of air pressure by check valves or equivalent devices.

S5.2.2 *Brake distribution and automatic adjustment.* Each vehicle shall be equipped with a service brake system acting on all wheels.

(a) *Brake adjuster.* Wear of the service brakes shall be compensated for by means of a system of automatic adjustment. When inspected pursuant to S5.9, the adjustment of the service brakes shall be within the limits recommended by the vehicle manufacturer.

(b) *Brake indicator.* For each brake equipped with an external automatic adjustment mechanism and having an exposed pushrod, the condition of service brake under-adjustment shall be displayed by a brake adjustment indicator in a manner that is discernible when viewed with 20/40 vision from a location adjacent to or underneath the vehicle, when inspected pursuant to S5.9.

S5.2.3 *Antilock brake system.*

S5.2.3.1(a) Each semitrailer (including a trailer converter dolly) manufactured on or after March 1, 1998, shall be equipped with an antilock brake system that directly controls the wheels of at least one axle of the vehicle. Wheels on other axles of the vehicle may be indirectly controlled by the antilock brake system.

(b) Each full trailer manufactured on or after March 1, 1998, shall be equipped with an antilock brake system that directly controls the wheels of at least one front axle of the vehicle and at least one rear axle of the vehicle. Wheels on other axles of the vehicle may be indirectly controlled by the antilock brake system.

S5.2.3.2 *Antilock malfunction signal.* Each trailer (including a trailer converter dolly) manufactured on or after March 1, 2001, that is equipped with an antilock brake system shall be equipped with an electrical circuit that is capable of signaling a malfunction in the trailer's antilock brake system, and shall have the means for connection of this antilock brake system malfunction signal circuit to the towing vehicle. The electrical circuit need not be separate or dedicated exclusively to this malfunction signaling function. The signal shall be present whenever there is a malfunction that affects the generation or transmission of response or control signals in the trailer's antilock brake system. The signal shall remain present as long as the malfunction exists, whenever power is supplied to the antilock brake system. Each message about the existence of such a malfunction shall be stored in the antilock brake system whenever power is no longer supplied to the system, and the malfunction signal shall be automatically reactivated whenever power is again supplied to the trailer's antilock brake system. In addition, each trailer manufactured on or after March 1, 2001, that is designed to tow other air-brake equipped trailers shall be capable of transmitting a malfunction signal from the antilock brake systems of additional trailers it tows to the vehicle towing it.

S5.2.3.3 *Antilock malfunction indicator.* In addition to the requirements of S5.2.3.2, each trailer (including a trailer converter dolly) manufactured on or after March 1, 1998, and before March 1, 2009, shall be equipped with an external indicator lamp that is activated whenever there is a malfunction that affects the generation or transmission of response or control signals in the trailer's antilock brake system. The indicator lamp shall remain activated as long as such a malfunction exists, whenever power is supplied to the antilock brake system. Each message about the existence of such a malfunction shall be stored in the antilock brake system whenever power is no longer supplied to the system, and the malfunction signal shall be automatically reactivated when power is again supplied to the trailer's antilock brake system. The indicator lamp shall also be activated as a check of lamp function whenever power is supplied to the antilock brake system and the vehicle is stationary. The indicator lamp shall be deactivated at the end of the check of lamp function unless there is a malfunction or a message about a malfunction that existed when power

was last supplied to the antilock brake system.

S5.3 *Service brakes—road tests.* The service brake system on each truck tractor manufactured before March 1, 1997, shall, under the conditions of S6, meet the requirements of S5.3.3 and S5.3.4, when tested without adjustments other than those specified in this standard. The service brake system on each truck tractor manufactured on or after March 1, 1997, shall, under the conditions of S6, meet the requirements of S5.3.1, S5.3.3, S5.3.4, and S5.3.6, when tested without adjustments other than those specified in this standard. The service brake system on each bus and truck (other than a truck tractor) manufactured before March 1, 1998, shall, under the conditions of S6, meet the requirements of S5.3.3, and S5.3.4, when tested without adjustments other than those specified in this standard. The service brake system on each bus and truck (other than a truck tractor) manufactured on or after March 1, 1998, shall, under the conditions of S6, meet the requirements of S5.3.1, S5.3.3, and S5.3.4 when tested without adjustments other than those specified in this standard. The service brake system on each trailer shall, under the conditions of S6, meet the requirements of S5.3.3, S5.3.4, and S5.3.5 when tested without adjustments other than those specified in this standard. However, a heavy hauler trailer and the truck and trailer portions of an auto transporter need not meet the requirements of S5.3.

S5.3.1 *Stopping distance—trucks and buses.* When stopped six times for each combination of vehicle type, weight, and speed specified in S5.3.1.1, in the sequence specified in Table I, each truck tractor manufactured on or after March 1, 1997, and each single unit vehicle manufactured on or after March 1, 1998, shall stop at least once in not more than the distance specified in Table II, measured from the point at which movement of the service brake control begins, without any part of the vehicle leaving the roadway, and with wheel lockup permitted only as follows:

(a) At vehicle speeds above 20 mph, any wheel on a nonsteerable axle other than the two rearmost nonliftable, nonsteerable axles may lock up, for any duration. The wheels on the two rearmost nonliftable, nonsteerable axles may lock up according to S5.3.1(b).

(b) At vehicle speeds above 20 mph, one wheel on any axle or two wheels on any tandem may lock up for any duration.

(c) At vehicle speeds above 20 mph, any wheel not permitted to lock in S5.3.1 (a) or (b) may lock up repeatedly, with each lockup occurring for a duration of one second or less.

(d) At vehicle speeds of 20 mph or less, any wheel may lock up for any duration.

S5.3.1.1 Stop the vehicle from 60 mph on a surface with a peak friction coefficient of 0.9 with the vehicle loaded as follows:

(a) Loaded to its GVWR,

(b) In the truck tractor only configuration plus up to 500 lbs., and

(c) At its unloaded vehicle weight (except for truck tractors) plus up to 500 lbs. (including driver and instrumentation). If the speed attainable in two miles is less than 60 mph, vehicle shall stop from a speed in Table II that is 4 to 8 mph less than the speed attainable in 2 miles.

S5.3.2 [Reserved]

S5.3.3 *Brake actuation time.* Each service brake system shall meet the requirements of S5.3.3.1 (a) and (b).

S5.3.3.1(a) With an initial service reservoir system air pressure of 100 psi, the air pressure in each brake chamber shall, when measured from the first movement of the service brake control, reach 60 psi in not more than 0.45 second in the case of trucks and buses, 0.50 second in the case of trailers, other than trailer converter dollies, designed to tow another vehicle equipped with air brakes, 0.55 second in the case of trailer converter dollies, and 0.60 second in the case of trailers other than trailers designed to tow another vehicle equipped with air brakes. A vehicle designed to tow another vehicle equipped with air brakes shall meet the above actuation time requirement with a 50-cubic-inch test reservoir connected to the control line output coupling. A trailer, including a trailer converter dolly, shall meet the above actuation time requirement with its control line input coupling connected to the test rig shown in Figure 1.

(b) For a vehicle that is designed to tow another vehicle equipped with air brakes, the pressure in the 50-cubic-inch test reservoir referred to in S5.3.3.1(a) shall, when measured from the first movement of the service brake control, reach 60 psi not later than the time the fastest brake chamber on the vehicle reaches 60 psi or, at the option of the manufacturer, in not more than 0.35 second in the case of trucks and buses, 0.55 second in the case of trailer converter dollies, and 0.50 second in the case of trailers other than trailer converter dollies.

S5.3.4 *Brake release time.* Each service brake system shall meet the requirements of S5.3.4.1 (a) and (b).

S5.3.4.1(a) With an initial service brake chamber air pressure of 95 psi, the air pressure in each brake chamber shall, when measured from the first movement of the service brake control, fall to 5 psi in not more than 0.55 second in the case of trucks and buses; 1.00 second in the case of trailers, other than trailer converter dollies, designed to tow another vehicle equipped with air brakes; 1.10 seconds in the case of trailer converter dollies; and 1.20 seconds in the case of trailers other than trailers designed to tow another vehicle equipped with air brakes. A vehicle designated to tow another vehicle equipped with air brakes shall meet the above release time requirement with a 50-cubic-inch test reservoir connected to the control line output coupling. A trailer, including a trailer converter dolly, shall meet the above release time requirement with its control line input coupling connected to the test rig shown in Figure 1.

(b) For vehicles designed to tow another vehicle equipped with air brakes, the pressure in the 50-cubic-inch test reservoir referred to in S5.3.4.1(a) shall, when measured from the first movement of the service brake control, fall to 5 psi in not more than 0.75 seconds in the case of trucks and buses, 1.10 seconds in the case of trailer converter dollies, and 1.00 seconds in the case of trailers other than trailer converter dollies.

S5.3.5 *Control signal pressure differential—converter dollies and trailers designed to tow another vehicle equipped with air brakes.*

(a) For a trailer designed to tow another vehicle equipped with air brakes, the pressure differential between the control line input coupling and a 50-cubic-inch test reservoir attached to the control line output coupling shall not exceed the values specified in S5.3.5(a) (1), (2), and (3) under the conditions specified in S5.3.5(b) (1) through (4):

(1) 1 psi at all input pressures equal to or greater than 5 psi, but not greater than 20 psi;

(2) 2 psi at all input pressures equal to or greater than 20 psi but not greater than 40 psi; and

(3) Not more than a 5-percent differential at any input pressure equal to or greater than 40 psi.

(b) The requirements in S5.3.5(a) shall be met—

(1) When the pressure at the input coupling is steady, increasing or decreasing;

(2) When air is applied to or released from the control line input coupling using the trailer test rig shown in Figure 1;

(3) With a fixed orifice consisting of a 0.0180 inch diameter hole (no. 77 drill bit) in a 0.032 inch thick disc installed

in the control line between the trailer test rig coupling and the vehicle's control line input coupling; and

(4) Operating the trailer test rig in the same manner and under the same conditions as it is operated during testing to measure brake actuation and release times, as specified in S5.3.3 and S5.3.4, except for the installation of the orifice in the control line to restrict airflow rate.

S5.3.6 *Stability and control during braking—truck tractors.* When stopped four consecutive times for each combination of weight, speed, and road conditions specified in S5.3.6.1 and S5.3.6.2, each truck tractor manufactured on or after March 1, 1997, shall stop at least three times within the 12-foot lane, without any part of the vehicle leaving the roadway.

S5.3.6.1 Using a full-treadle brake application for the duration of the stop, stop the vehicle from 30 mph or 75 percent of the maximum drive-through speed, whichever is less, on a 500-foot radius curved roadway with a wet level surface having a peak friction coefficient of 0.5 when measured on a straight or curved section of the curved roadway using an American Society for Testing and Materials (ASTM) E1136 standard reference tire, in accordance with ASTM Method E1337–90, at a speed of 40 mph, with water delivery.

S5.3.6.2 Stop the vehicle with the vehicle

(a) Loaded to its GVWR, and

(b) At its unloaded weight plus up to 500 pounds (including driver and instrumentation), or at the manufacturer's option, at its unloaded weight plus up to 500 pounds (including driver and instrumentation) and plus not more than an additional 1000 pounds for a roll bar structure on the vehicle.

S5.4 *Service brake system—dynamometer tests.* When tested without prior road testing, under the conditions of S6.2, each brake assembly shall meet the requirements of S5.4.1, S5.4.2, and S5.4.3 when tested in sequence and without adjustments other than those specified in the standard. For purposes of the requirements of S5.4.2 and S5.4.3, an average deceleration rate is the change in velocity divided by the deceleration time measured from the onset of deceleration.

S5.4.1 *Brake retardation force.* The sum of the retardation forces exerted by the brakes on each vehicle designed to be towed by another vehicle equipped with air brakes shall be such that the quotient sum of the brake retardation forces / sum of GAWR's relative to brake chamber air pressure, and shall have values not less than those shown in Column 1 of Table III. Retardation force shall be determined as follows:

S5.4.1.1 After burnishing the brake pursuant to S6.2.6, retain the brake assembly on the inertia dynamometer. With an initial brake temperature between 125°F. and 200°F., conduct a stop from 50 m.p.h., maintaining brake chamber air pressure at a constant 20 psi. Measure the average torque exerted by the brake from the time the specified air pressure is reached until the brake stops and divide by the static loaded tire radius specified by the tire manufacturer to determine the retardation force. Repeat the procedure six times, increasing the brake chamber air pressure by 10 psi each time. After each stop, rotate the brake drum or disc until the temperature of the brake falls to between 125°F. And 200°F.

S5.4.2 *Brake power.* When mounted on an inertia dynamometer, each brake shall be capable of making 10 consecutive decelerations at an average rate of 9 f.p.s.p.s. from 50 m.p.h. to 15 m.p.h., at equal intervals of 72 seconds, and shall be capable of decelerating to a stop from 20 m.p.h. at an average deceleration rate of 14 f.p.s.p.s. 1 minute after the 10th deceleration. The series of decelerations shall be conducted as follows:

S5.4.2.1 With an initial brake temperature between 150°F. and 200°F. for the first brake application, and the drum or disc rotating at a speed equivalent to 50 m.p.h., apply the brake and decelerate at an average deceleration rate of 9 f.p.s.p.s. to 15 m.p.h. Upon reaching 15 m.p.h., accelerate to 50 m.p.h. and apply the brake for a second time 72 seconds after the start of the first application. Repeat the cycle until 10 decelerations have been made. The service line air pressure shall not exceed 100 psi during any deceleration.

S5.4.2.2 One minute after the end of the last deceleration required by S5.4.2.1 and with the drum or disc rotating at a speed of 20 m.p.h., decelerate to a stop at an average deceleration rate of 14 f.p.s.p.s.

S5.4.3 *Brake recovery.* Except as provided in S5.4.3(a) and (b), starting two minutes after completing the tests required by S5.4.2, a vehicle's brake shall be capable of making 20 consecutive stops from 30 mph at an average deceleration rate of 12 f.p.s.p.s., at equal intervals of one minute measured from the start of each brake application. The service line air pressure needed to attain a rate of 12 f.p.s.p.s. shall be not more than 85 lb/in^2, and not less than 20lb/in^2 for a brake not subject to the control of an antilock system, or 12 lb/in^2 for a brake subject to the control of an antilock system.

(a) Notwithstanding S5.4.3, neither front axle brake of a truck-tractor is subject to the requirements set forth in S5.4.3.

(b) Notwithstanding S5.4.3, neither front axle brake of a bus or a truck other than a truck-tractor is subject to the requirement set forth in S5.4.3 prohibiting the service line air pressure from being less than 20 lb/in^2 for a brake not subject to the control of an antilock system or 12 lb/in^2 for a brake subject to the control of an antilock system.

S5.5 *Antilock system.*

S5.5.1 *Antilock system malfunction.* On a truck tractor manufactured on or after March 1, 1997, that is equipped with an antilock brake system and a single unit vehicle manufactured on or after March 1, 1998, that is equipped with an antilock brake system, a malfunction that affects the generation or transmission of response or control signals of any part of the antilock system shall not increase the actuation and release times of the service brakes.

S5.5.2 *Antilock system power—trailers.* On a trailer (including a trailer converter dolly) manufactured on or after March 1, 1998, that is equipped with an antilock system that requires electrical power for operation, the power shall be obtained from the towing vehicle through one or more electrical circuits which provide continuous power whenever the powered vehicle's ignition (start) switch is in the ''on'' (''run'') position. The antilock system shall automatically receive power from the stoplamp circuit, if the primary circuit or circuits are not functioning. Each trailer (including a trailer converter dolly) manufactured on or after March 1, 1998, that is equipped to tow another air-braked vehicle shall be equipped with one or more circuits which provide continuous power to the antilock system on the vehicle(s) it tows. Such circuits shall be adequate to enable the antilock system on each towed vehicle to be fully operable.

S5.6 *Parking brakes.*

(a) Except as provided in S5.6(b) and S5.6(c), each vehicle other than a trailer converter dolly shall have a parking brake system that under the conditions of S6.1 meets the requirements of:

(1) S5.6.1 or S5.6.2, at the manufacturer's option, and

(2) S5.6.3, S5.6.4, S5.6.5, and S5.6.6.

(b) At the option of the manufacturer, for vehicles equipped with brake systems which incorporate a common diaphragm, the performance requirements specified in S5.6(a) which must be met with any single leakage-type failure in a common diaphragm

may instead be met with the level of leakage-type failure determined in S5.6.7. The election of this option does not affect the performance requirements specified in S5.6(a) which apply with single leakage-type failures other than failures in a common diaphragm.

(c) At the option of the manufacturer, the trailer portion of any agricultural commodity trailer, heavy hauler trailer, or pulpwood trailer may meet the requirements of § 393.43 of this title instead of the requirements of S5.6(a).

S5.6.1 *Static retardation force.* With all other brakes made inoperative, during a static drawbar pull in a forward or rearward direction, the static retardation force produced by the application of the parking brakes shall be:

(a) In the case of a vehicle other than a truck-tractor that is equipped with more than two axles, such that the quotient static retardation force/GAWR is not less than 0.28 for any axle other than a steerable front axle; and

(b) In the case of a truck-tractor that is equipped with more than two axles, such that the quotient static retardation force/GVWR is not less than 0.14.

S5.6.2 *Grade holding.* With all parking brakes applied, the vehicle shall remain stationary facing uphill and facing downhill on a smooth, dry portland cement concrete roadway with a 20-percent grade, both

(a) When loaded to its GVWR, and

(b) At its unloaded vehicle weight plus 500 pounds (including driver and instrumentation).

S5.6.3 *Application and holding.* Each parking brake system shall meet the requirements of S5.6.3.1 through S5.6.3.4.

S5.6.3.1 The parking brake system shall be capable of achieving the minimum performance specified either in S5.6.1 or S5.6.2 with any single leakage-type failure, in any other brake system, of a part designed to contain compressed air or brake fluid (excluding failure of a component of a brake chamber housing but including failure of any brake chamber diaphragm that is part of any other brake system including a diaphragm which is common to the parking brake system and any other brake system), when the pressures in the vehicle's parking brake chambers are at the levels determined in S5.6.3.4.

S5.6.3.2 A mechanical means shall be provided that, after a parking brake application is made with the pressures in the vehicle's parking brake chambers at the levels determined in S5.6.3.4, and all air and fluid pressures in the vehicle's braking systems are then bled down to zero, and without using electrical power, holds the parking brake application with sufficient parking retardation force to meet the minimum performance specified in S5.6.3.1 and in either S5.6.1 or S5.6.2.

S5.6.3.3 For trucks and buses, with an initial reservoir system pressure of 100 psi and, if designed to tow a vehicle equipped with air brakes, with a 50 cubic inch test reservoir connected to the supply line coupling, no later than three seconds from the time of actuation of the parking brake control, the mechanical means referred to in S5.6.3.2 shall be actuated. For trailers, with the supply line initially pressurized to 100 psi using the supply line portion of the trailer test rig (Figure 1) and, if designed to tow a vehicle equipped with air brakes, with a 50 cubic inch test reservoir connected to the rear supply line coupling, no later than three seconds from the time venting to the atmosphere of the front supply line coupling is initiated, the mechanical means referred to in S5.6.3.2 shall be actuated. This requirement shall be met for trucks, buses and trailers both with and without any single leakage-type failure, in any other brake system, of a part designed to contain compressed air or brake fluid (consistent with the parenthetical phrase specified in S5.6.3.1).

S5.6.3.4 The parking brake chamber pressures for S5.6.3.1 and S5.6.3.2 are determined as follows. For trucks and buses, with an initial reservoir system pressure of 100 psi and, if designed to tow a vehicle equipped with air brakes, with a 50 cubic inch test reservoir connected to the supply line coupling, any single leakage type failure, in any other brake system, of a part designed to contain compressed air or brake fluid (consistent with the parenthetical phrase specified in S5.6.3.1), is introduced in the brake system. The parking brake control is actuated and the pressures in the vehicle's parking brake chambers are measured three seconds after that actuation is initiated. For trailers, with the supply line initially pressurized to 100 psi using the supply line portion of the trailer test rig (Figure 1) and, if designed to tow a vehicle equipped with air brakes, with a 50 cubic inch test reservoir connected to the rear supply line coupling, any single leakage type failure, in any other brake system, of a part designed to contain compressed air or brake fluid (consistent with the parenthetical phrase specified in S5.6.3.1), is introduced in the brake system. The front supply line coupling is vented to the atmosphere and the pressures in the vehicle's parking brake chambers are measured three seconds after that venting is initiated.

S5.6.4 *Parking brake control—trucks and buses.* The parking brake control shall be separate from the service brake control. It shall be operable by a person seated in the normal driving position. The control shall be identified in a manner that specifies the method of control operation. The parking brake control shall control the parking brakes of the vehicle and of any air braked vehicle that it is designed to tow.

S5.6.5 *Release Performance.* Each parking brake system shall meet the requirements specified in S5.6.5.1 through S5.6.5.4.

S5.6.5.1 For trucks and buses, with initial conditions as specified in S5.6.5.2, at all times after an application actuation of the parking brake control, and with any subsequent level of pressure, or combination of levels of pressure, in the reservoirs of any of the vehicle's brake systems, no reduction in parking brake retardation force shall result from a release actuation of the parking brake control unless the parking brakes are capable, after such release, of being reapplied at a level meeting the minimum performance specified either in S5.6.1 or S5.6.2. This requirement shall be met both with and without the engine on, and with and without single leakage-type failure, in any other brake system, of a part designed to contain compressed air or brake fluid (consistent with the parenthetical phrase specified in S5.6.3.1).

S5.6.5.2 The initial conditions for S5.6.5.1 are as follows: The reservoir system pressure is 100 psi. If the vehicle is designed to tow a vehicle equipped with air brakes, a 50 cubic inch test reservoir is connected to the supply line coupling.

S5.6.5.3 For trailers, with initial conditions as specified in S5.6.5.4, at all times after actuation of the parking brakes by venting the front supply line coupling to the atmosphere, and with any subsequent level of pressure, or combination of levels of pressure, in the reservoirs of any of the vehicle's brake systems, the parking brakes shall not be releasable by repressurizing the supply line using the supply line portion of the trailer test rig (Figure 1) to any pressure above 70 psi, unless the parking brakes are capable, after such release, of reapplication by subsequent venting of the front supply line coupling to the atmosphere, at a level meeting the minimum performance specified either in S5.6.1 or S5.6.2. This requirement shall be met both with and without any single leakage-type failure, in any other brake system, of a part designed to contain compressed air or brake fluid (consistent with the parenthetical phrase specified in S5.6.3.1).

S5.6.5.4 The initial conditions for S5.6.5.3 are as follows: The reservoir system and supply line are pressurized to 100 psi, using the supply line portion of the trailer test rig (Figure 1). If the vehicle is designed to tow a vehicle equipped with air brakes, a 50 cubic inch test reservoir is connected to the rear supply line coupling.

S5.6.6 *Accumulation of actuation energy.* Each parking brake system shall meet the requirements specified in S5.6.6.1 through S5.6.6.6.

S5.6.6.1 For trucks and buses, with initial conditions as specified in S5.6.6.2, the parking brake system shall be capable of meeting the minimum performance specified either in S5.6.1 or S5.6.2, with any single leakage-type failure, in any other brake system, of a part designed to contain compressed air or brake fluid (consistent with the parenthetical phrase specified in S5.6.3.1) at the conclusion of the test sequence specified in S5.6.6.3.

S5.6.6.2 The initial conditions for S5.6.6.1 are as follows: The engine is on. The reservoir system pressure is 100 psi. If the vehicle is designed to tow a vehicle equipped with air brakes, a 50 cubic inch test reservoir is connected to the supply line coupling.

S5.6.6.3 The test sequence for S5.6.6.1 is as follows: The engine is turned off. Any single leakage type failure, in any other brake system, of a part designed to contain compressed air or brake fluid (consistent with the parenthetical phrase specified in S5.6.3.1), is then introduced in the brake system. An application actuation of the parking brake control is then made. Thirty seconds after such actuation, a release actuation of the parking brake control is made. Thirty seconds after the release actuation, a final application actuation of the parking brake control is made.

S5.6.6.4 For trailers, with initial conditions as specified in S5.6.6.5, the parking brake system shall be capable of meeting the minimum performance specified either in S5.6.1 or S5.6.2, with any single leakage-type failure, in any other brake system, of a part designed to contain compressed air or brake fluid (consistent with the parenthetical phrase specified in S5.6.3.1), at the conclusion of the test sequence specified in S5.6.6.6.

S5.6.6.5 The initial conditions for S5.6.6.4 are as follows: The reservoir system and supply line are pressurized to 100 psi, using the supply line portion of the trailer test rig (Figure 1). If the vehicle is designed to tow a vehicle equipped with air brakes, a 50 cubic inch test reservoir is connected to the rear supply line coupling.

S5.6.6.6 The test sequence for S5.6.6.4 is as follows. Any single leakage type failure, in any other brake system, of a part designed to contain compressed air or brake fluid (consistent with the parenthetical phrase specified in S5.6.3.1), is introduced in the brake system. The front supply line coupling is vented to the atmosphere. Thirty seconds after the initiation of such venting, the supply line is repressurized with the trailer test rig (Figure 1). Thirty seconds after the initiation of such repressurizing of the supply line, the front supply line is vented to the atmosphere. This procedure is conducted either by connection and disconnection of the supply line coupling or by use of a valve installed in the supply line portion of the trailer test rig near the supply line coupling.

S5.6.7 *Maximum level of common diaphragm leakage-type failure/ Equivalent level of leakage from the air chamber containing that diaphragm.*

In the case of vehicles for which the option in S5.6(b) has been elected, determine the maximum level of common diaphragm leakage-type failure (or equivalent level of leakage from the air chamber containing that diaphragm) according to the procedures set forth in S5.6.7.1 through S5.6.7.2.3.

S5.6.7.1 *Trucks and buses.*

S5.6.7.1.1 According to the following procedure, determine the threshold level of common diaphragm leakage-type failure (or equivalent level of leakage from the air chamber containing that diaphragm) at which the vehicle's parking brakes become unreleasable. With an initial reservoir system pressure of 100 psi, the engine turned off, no application of any of the vehicle's brakes, and, if the vehicle is designed to tow a vehicle equipped with air brakes, a 50 cubic inch test reservoir connected to the supply line coupling, introduce a leakage-type failure of the common diaphragm (or equivalent leakage from the air chamber containing that diaphragm). Apply the parking brakes by making an application actuation of the parking brake control. Reduce the pressures in all of the vehicle's reservoirs to zero, turn on the engine and allow it to idle, and allow the pressures in the vehicle's reservoirs to rise until they stabilize or until the compressor shut-off point is reached. At that time, make a release actuation of the parking brake control, and determine whether all of the mechanical means referred to in S5.6.3.2 continue to be actuated and hold the parking brake applications with sufficient parking retardation force to meet the minimum performance specified in either S5.6.1 or S5.6.2. Repeat this procedure with progressively decreasing or increasing levels (whichever is applicable) of leakage-type diaphragm failures or equivalent leakages, to determine the minimum level of common diaphragm leakage-type failure (or equivalent level of leakage from the air chamber containing that diaphragm) at which all of the mechanical means referred to in S5.6.3.2 continue to be actuated and hold the parking brake applications with sufficient parking retardation forces to meet the minimum performance specified in either S5.6.1 or S5.6.2.

S5.6.7.1.2 At the level of common diaphragm leakage-type failure (or equivalent level of leakage from the air chamber containing that diaphragm) determined in S5.6.7.1.1, and using the following procedure, determine the threshold maximum reservoir rate (in psi per minute). With an initial reservoir system pressure of 100 psi, the engine turned off, no application of any of the vehicle's brakes and, if the vehicle is designed to tow a vehicle equipped with air brakes, a 50 cubic inch test reservoir connected to the supply line coupling, make an application actuation of the parking brake control. Determine the maximum reservoir leakage rate (in psi per minute), which is the maximum rate of decrease in air pressure of any of the vehicle's reservoirs that results after that parking brake application.

S5.6.7.1.3 Using the following procedure, introduce a leakage-type failure of the common diaphragm (or equivalent leakage from the air chamber containing that diaphragm) that results in a maximum reservoir leakage rate that is three times the threshold maximum reservoir leakage rate determined in S5.6.7.1.2. With an initial reservoir system pressure of 100 psi, the engine turned off, no application of any of the vehicle's brakes and, if the vehicle is designed to tow a vehicle equipped with air brakes, a 50 cubic inch test reservoir connected to the supply line coupling, make an application actuation of the parking brake control. Determine the maximum reservoir leakage rate (in psi per minute), which is the maximum rate of decrease in air pressure of any of the vehicle's reservoirs that results after that parking brake application. The level of common diaphragm leakage-type failure (or equivalent level of leakage from the air chamber containing that diaphragm) associated with this reservoir leakage rate is the level that is to be used under the option set forth in S5.6(b).

S5.6.7.2 *Trailers.*

S5.6.7.2.1 According to the following procedure, determine the

threshold level of common diaphragm leakage-type failure (or equivalent level of leakage from the air chamber containing that diaphragm) at which the vehicle's parking brakes become unreleasable. With an initial reservoir system and supply line pressure of 100 psi, no application of any of the vehicle's brakes, and, if the vehicle is designed to tow a vehicle equipped with air brakes, a 50 cubic inch test reservoir connected to the supply line coupling, introduce a leakage-type failure of the common diaphragm (or equivalent leakage from the air chamber containing that diaphragm). Make a parking brake application by venting the front supply line coupling to the atmosphere, and reduce the pressures in all of the vehicle's reservoirs to zero. Pressurize the supply line by connecting the trailer's front supply line coupling to the supply line portion of the trailer test rig (Figure 1) with the regulator of the trailer test rig set at 100 psi, and determine whether all of the mechanical means referred to in S5.6.3.2 continue to be actuated and hold the parking brake applications with sufficient parking retardation forces to meet the minimum performance specified in either S5.6.1 or S5.6.2. Repeat this procedure with progressively decreasing or increasing levels (whichever is applicable) of leakage-type diaphragm failures or equivalent leakages, to determine the minimum level of common diaphragm leakage-type failure (or equivalent level of leakage from the air chamber containing that diaphragm) at which all of the mechanical means referred to in S5.6.3.2 continue to be actuated and hold the parking brake applications with sufficient parking retardation forces to meet the minimum performance specified in either S5.6.1 or S5.6.2.

S5.6.7.2.2 At the level of common diaphragm leakage-type failure (or equivalent level of leakage from the air chamber containing that diaphragm) determined in S5.6.7.2.1, and using the following procedure, determine the threshold maximum reservoir leakage rate (in psi per minute). With an initial reservoir system and supply line pressure of 100 psi, no application of any of the vehicle's brakes and, if the vehicle is designed to tow a vehicle equipped with air brakes, a 50 cubic inch test reservoir connected to the rear supply line coupling, make a parking brake application by venting the front supply line coupling to the atmosphere. Determine the maximum reservoir leakage rate (in psi per minute), which is the maximum rate of decrease in air pressure of any of the vehicle's reservoirs that results after that parking brake application.

S5.6.7.2.3 Using the following procedure, a leakage-type failure of the common diaphragm (or equivalent leakage from the air chamber containing that diaphragm) that results in a maximum reservoir leakage rate that is three times the threshold maximum reservoir leakage rate determined in S5.6.7.2.2. With an initial reservoir system and supply line pressure of 100 psi, no application of any of the vehicle's brakes and, if the vehicle is designed to tow a vehicle equipped with air brakes, a 50 cubic inch test reservoir connected to the rear supply line coupling, make a parking brake application by venting the front supply line coupling to the atmosphere. Determine the maximum reservoir leakage rate (in psi per minute), which is the maximum rate of decrease in air pressure of any of the vehicle's reservoirs that results after that parking brake application. The level of common diaphragm leakage-type failure (or equivalent level of leakage from the air chamber containing that diaphragm) associated with this reservoir leakage rate is the level that is to be used under the option set forth in S5.6(b).

S5.7 *Emergency brake system for trucks and buses.* Each vehicle shall be equipped with an emergency brake system which, under the conditions of S6.1, conforms to the requirements of S5.7.1 through S5.7.3. However, the truck portion of an auto transporter need not meet the road test requirements of S5.7.1 and S5.7.3.

S5.7.1 *Emergency brake system performance.* When stopped six times for each combination of weight and speed specified in S5.3.1.1, except for a loaded truck tractor with an unbraked control trailer, on a road surface having a PFC of 0.9, with a single failure in the service brake system of a part designed to contain compressed air or brake fluid (except failure of a common valve, manifold, brake fluid housing, or brake chamber housing), the vehicle shall stop at least once in not more than the distance specified in Column 5 of Table II, measured from the point at which movement of the service brake control begins, except that a truck-tractor tested at its unloaded vehicle weight plus up to 500 pounds shall stop at least once in not more than the distance specified in Column 6 of Table II. The stop shall be made without any part of the vehicle leaving the roadway, and with unlimited wheel lockup permitted at any speed.

S5.7.2 *Emergency brake system operation.* The emergency brake system shall be applied and released, and be capable of modulation, by means of the service brake control.

S5.7.3 *Towing vehicle emergency brake requirements.* In addition to meeting the other requirements of S5.7, a vehicle designed to tow another vehicle equipped with air brakes shall—

(a) In the case of a truck-tractor in the unloaded condition and a single unit truck which is capable of towing an airbrake equipped vehicle and is loaded to GVWR, be capable of meeting the requirements of S5.7.1 by operation of the service brake control only, with the trailer air supply line and air control line from the towing vehicle vented to the atmosphere in accordance with S6.1.14;

(b) In the case of a truck-tractor loaded to GVWR, be capable of meeting S5.7.1 by operation of the service brake control only, with the air control line from the towing vehicle vented to the atmosphere in accordance with S6.1.14; and

(c) Be capable of modulating the air in the supply or control line to the trailer by means of the service brake control with a single failure in the towing vehicle service brake system as specified in S5.7.1.

S5.8 *Emergency brakes for trailers.* Each trailer shall meet the requirements of S5.8.1 through S5.8.3.

S5.8.1 *Emergency braking capability.* Each trailer other than a trailer converter dolly shall have a parking brake system that conforms to S5.6 and that applies with the force specified in S5.6.1 or S5.6.2 when the air pressure in the supply line is at atmospheric pressure. A trailer converter dolly shall have, at the manufacturer's option—

(a) A parking brake system that conforms to S5.6 and that applies with the force specified in S5.6.1 or S5.6.2 when the air pressure in the supply line is at atmospheric pressure, or

(b) An emergency system that automatically applies the service brakes when the service reservoir is at any pressure above 20 lb/in^2 and the supply line is at atmospheric pressure. However, any agricultural commodity trailer, heavy hauler trailer, or pulpwood trailer shall meet the requirements of S5.8.1 or, at the option of the manufacturer, the requirements of § 393.43 of this title.

S5.8.2 *Supply line pressure retention.* Any single leakage type failure in the service brake system (except for a failure of the supply line, a valve directly connected to the supply line or a component of a brake chamber housing) shall not result in the pressure in the supply line falling below 70 psi, measured at the forward trailer supply

coupling. A trailer shall meet the above supply line pressure retention requirement with its brake system connected to the trailer test rig shown in Figure 1, with the reservoirs of the trailer and test rig initially pressurized to 100 psi and the regulator of the trailer test rig set at 100 psi; except that a trailer equipped with an air-applied, mechanically-held parking brake system and not designed to tow a vehicle equipped with air brakes, at the manufacturer's option, may meet the requirements of S5.8.4 rather than those of S5.8.2 and S5.8.3.

S5.8.3 *Automatic application of parking brakes.* With an initial reservoir system pressure of 100 psi and initial supply line pressure of 100 psi, and if designed to tow a vehicle equipped with air brakes, with a 50 cubic inch test reservoir connected to the rear supply line coupling, and with any subsequent single leakage type failure in any other brake system, of a part designed to contain compressed air or brake fluid (consistent with the parenthetical phrase specified in S5.6.3.1), whenever the air pressure in the supply line is 70 psi or higher, the parking brakes shall not provide any brake retardation as a result of complete or partial automatic application of the parking brakes.

S5.8.4 *Automatic application of air-applied, mechanically held parking brakes.* With its brake system connected to the supply line portion of the trailer test rig (Figure 1) and the regulator of the trailer test rig set at 100 psi, and with any single leakage type failure in the service brake system (except for a failure of the supply line, a valve directly connected to the supply line or a component of a brake chamber, but including failure of any common diaphragm), the parking brakes shall not provide any brake retardation as a result of complete or partial automatic application of the parking brakes.

S5.9 *Final inspection.* Inspect the service brake system for the condition of adjustment and for the brake indicator display in accordance with S5.1.8 and S5.2.2.

S6. *Conditions.* The requirements of S5 shall be met by a vehicle when it is tested according to the conditions set in this S6, without replacing any brake system part or making any adjustments to the brake system except as specified. Unless otherwise specified, where a range of conditions is specified, the vehicle must be capable of meeting the requirements at all points within the range. On vehicles equipped with automatic brake adjusters, the automatic brake adjusters must remain activated at all times. Compliance of vehicles manufactured in two or more stages may, at the option of the final-stage manufacturer, be demonstrated to comply with this standard by adherence to the instructions of the incomplete vehicle manufacturer provided with the vehicle in accordance with § 568.4(a)(7)(ii) and § 568.5 of title 49 of the Code of Federal Regulations.

S6.1 *Road test conditions.*

S6.1.1 Except as otherwise specified, the vehicle is loaded to its GVWR, distributed proportionally to its GAWRs. During the burnish procedure specified in S6.1.8, truck tractors shall be loaded to their GVWR, by coupling them to an unbraked flatbed semitrailer, which semitrailer shall be loaded so that the weight of the tractor-trailer combination equals the GVWR of the truck tractor. The load on the unbraked flatbed semitrailer shall be located so that the truck tractor's wheels do not lock during burnish.

S6.1.2 The inflation pressure is as specified by the vehicle manufacturer for the GVWR.

S6.1.3 Unless otherwise specified, the transmission selector control is in neutral or the clutch is disengaged during all decelerations and during static parking brake tests.

S6.1.4 All vehicle openings (doors, windows, hood, trunk, cargo doors, etc.) are in a closed position except as required for instrumentation purposes.

S6.1.5 The ambient temperature is between 32° F. and 100° F.

S6.1.6 The wind velocity is zero.

S6.1.7 Unless otherwise specified, stopping tests are conducted on a 12-foot wide level, straight roadway having a peak friction coefficient of 0.9. For road tests in S5.3, the vehicle is aligned in the center of the roadway at the beginning of a stop. Peak friction coefficient is measured using an ASTM E1136 standard reference test tire in accordance with ASTM method E1337–90, at a speed of 40 mph, without water delivery for the surface with PFC of 0.9, and with water delivery for the surface with PFC of 0.5.

S6.1.8 For vehicles with parking brake systems not utilizing the service brake friction elements, burnish the friction elements of such systems prior to the parking brake test according to the manufacturer's recommendations. For vehicles with parking brake systems utilizing the service brake friction elements, burnish the brakes as follows: With the transmission in the highest gear appropriate for a speed of 40 mph, make 500 snubs between 40 mph and 20 mph at a deceleration rate of 10 f.p.s.p.s., or at the vehicle's maximum deceleration rate if less than 10 f.p.s.p.s. Except where an adjustment is specified, after each brake application accelerate to 40 mph and maintain that speed until making the next brake application at a point 1 mile from the initial point of the previous brake application. If the vehicle cannot attain a speed of 40 mph in 1 mph, continue to accelerate until the vehicle reaches 40 mph or until the vehicle has traveled 1.5 miles from the initial point of the previous brake application, whichever occurs first. Any automatic pressure limiting valve is in use to limit pressure as designed. The brakes may be adjusted up to three times during the burnish procedure, at intervals specified by the vehicle manufacturer, and may be adjusted at the conclusion of the burnishing, in accordance with the vehicle manufacturer's recommendation.

S6.1.9 Static parking brake tests for a semitrailer are conducted with the front-end supported by an unbraked dolly. The weight of the dolly is included as part of the trailer load.

S6.1.10 In a test other than a static parking test, a truck tractor is tested at its GVWR by coupling it to an unbraked flatbed semi-trailer (hereafter, control trailer) as specified in S6.1.10.2 to S6.1.10.4.

S6.1.10.1 [Reserved]

S6.1.10.2 The center of gravity height of the ballast on the loaded control trailer shall be less than 24 inches above the top of the tractor's fifth wheel.

S6.1.10.3 The control trailer has a single axle with a GAWR of 18,000 pounds and a length, measured from the transverse centerline of the axle to the centerline of the kingpin, of 258 ± 6 inches.

S6.1.10.4 The control trailer is loaded so that its axle is loaded at 4,500 pounds and the tractor is loaded to its GVWR, loaded above the kingpin only, with the tractor's fifth wheel adjusted so that the load on each axle measured at the tire-ground interface is most nearly proportional to the axles' respective GAWRs, without exceeding the GAWR of the tractor's axle or axles or control trailer's axle.

S6.1.11 *Special drive conditions.* A vehicle equipped with an interlocking axle system or a front wheel drive system that is engaged and disengaged by the driver is tested with the system disengaged.

S6.1.12 *Liftable axles.* A vehicle with a liftable axle is tested at GVWR with the liftable axle down and at unloaded vehicle weight with the liftable axle up.

S6.1.13 *Trailer test rig.*

(a) The trailer test rig shown in Figure 1 is calibrated in accordance with the calibration curves shown in Figure 3.

For the requirements of S5.3.3.1 and S5.3.4.1, the pressure in the trailer test rig reservoir is initially set at 100 psi for actuation tests and 95 psi for release tests.

(b) The trailer test rig shown in Figure 1(a) is capable of increasing the pressure in a 50 cubic inch reservoir from atmospheric to 60 lb/in^2 in 0.06 second, measured from the first movement of the service brake control to apply service brake pressure and of releasing pressure in such a reservoir from 95 to 5 lb/in^2 in 0.22 second measured from the first movement of the service brake control to release service brake pressure.

S6.1.14 In testing the emergency braking system of towing vehicles under S5.7.3(a) and S5.7.3(b), the hose(s) is vented to the atmosphere at any time not less than 1 second and not more than 1 minute before the emergency stop begins, while the vehicle is moving at the speed from which the stop is to be made and any manual control for the towing vehicle protection system is in the position to supply air and brake control signals to the vehicle being towed. No brake application is made from the time the line(s) is vented until the emergency stop begins and no manual operation of the parking brake system or towing vehicle protection system occurs from the time the line(s) is vented until the stop is completed.

S6.1.15 *Initial brake temperature.* Unless otherwise specified, the initial brake temperature is not less than 150° F and not more than 200° F.

6.2 *Dynamometer test conditions.*

S6.2.1 The dynamometer inertia for each wheel is equivalent to the load on the wheel with the axle loaded to its GAWR. For a vehicle having additional GAWRs specified for operation at reduced speeds, the GAWR used is that specified for a speed of 50 mph, or, at the option of the manufacturer, any speed greater than 50 mph.

S6.2.2 The ambient temperature is between 75° F. and 100° F.

S6.2.3 Air at ambient temperature is directed uniformly and continuously over the brake drum or disc at a velocity of 2,200 feet per minute.

S6.2.4 The temperature of each brake is measured by a single plug-type thermocouple installed in the center of the lining surface of the most heavily loaded shoe or pad as shown in Figure 2. The thermocouple is outside any center groove.

S6.2.5 The rate of brake drum or disc rotation on a dynamometer or responding to the rate of rotation on a vehicle at a given speed is calculated by assuming a tire radius equal to the static loaded radius specified by the tire manufacturer.

S6.2.6 Brakes are burnished before testing as follows: place the brake assembly on an inertia dynamometer and adjust the brake as recommended by the vehicle manufacturer. Make 200 stops from 40 mph at a deceleration of 10 f.p.s.p.s., with an initial brake temperature on each stop of not less than 315° F and not more than 385° F. Make 200 additional stops from 40 mph at a deceleration of 10 f.p.s.p.s. with an initial brake temperature on each stop of not less than 450° F and not more than 550° F. The brakes may be adjusted up to three times during the burnish procedure, at intervals specified by the vehicle manufacturer, and may be adjusted at the conclusion of the burnishing, in accordance with the vehicle manufacturer's recommendation.

S6.2.7 The brake temperature is increased to a specified level by conducting one or more stops from 40 m.p.h. at a deceleration of 10 f.p.s.p.s. The brake temperature is decreased to a specified level by rotating the drum or disc at a constant 30 m.p.h.

BILLING CODE 4910–59–P

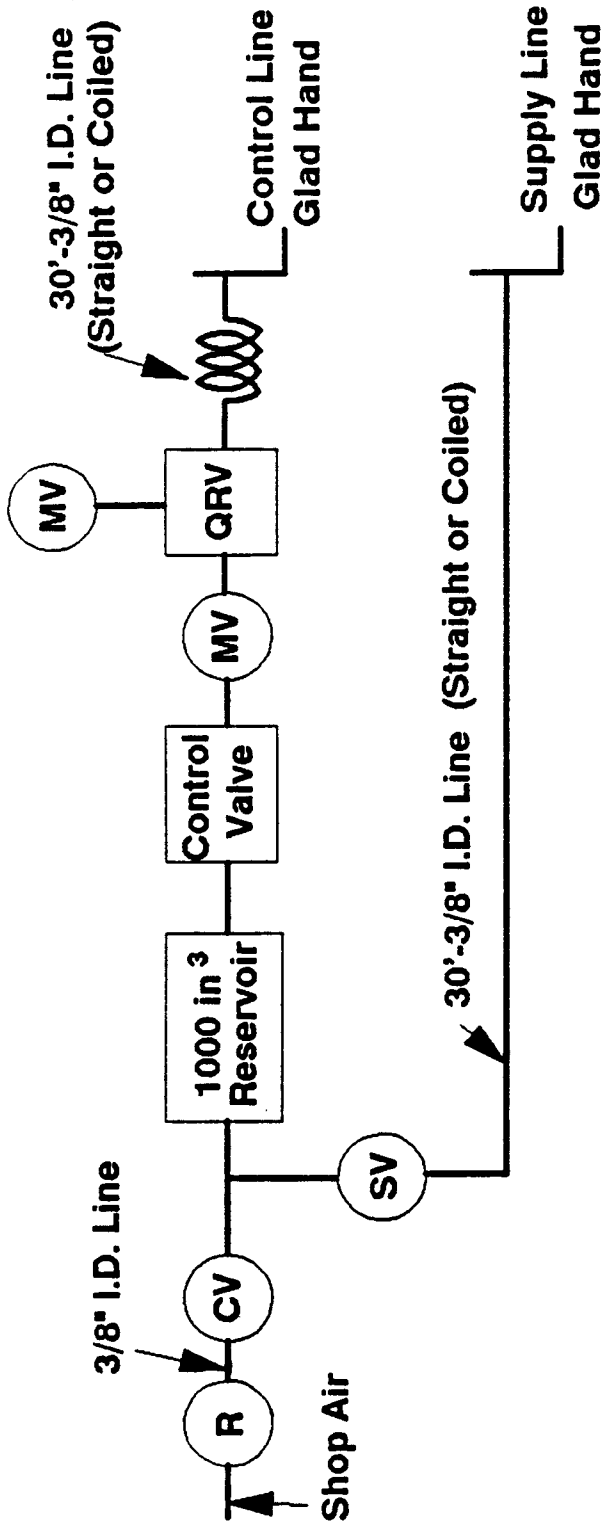

SV - Shut-off Valve

R - Regulator (set at 100 psi for service brake actuation tests; 95 psi for service brake release tests; 100 psi for parking brake tests in S5.6.3.3, S5.6.3.4, S5.6.5.4, and S5.6.6.5, and for the supply line pressure retention test in S5.8.2; and any pressure above 70 psi for parking brake test in S5.6.5.3.)

CV - Check Valve

MV - Metering Valve (Variable or Fixed)

QRV - Quick Release Valve

Figure 1. Trailer Test Rig.

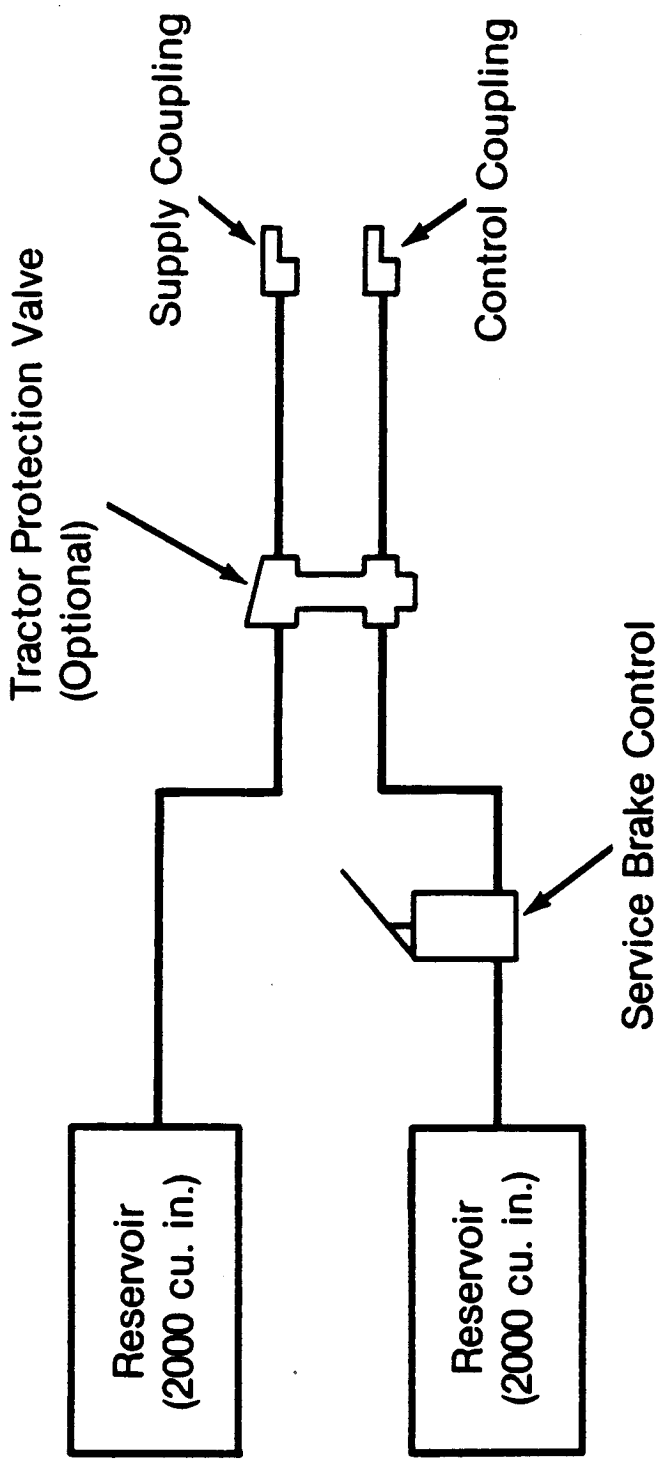

Figure 1(a). Trailer Test Rig.

FIGURE 2

THERMOCOUPLE INSTALLATION

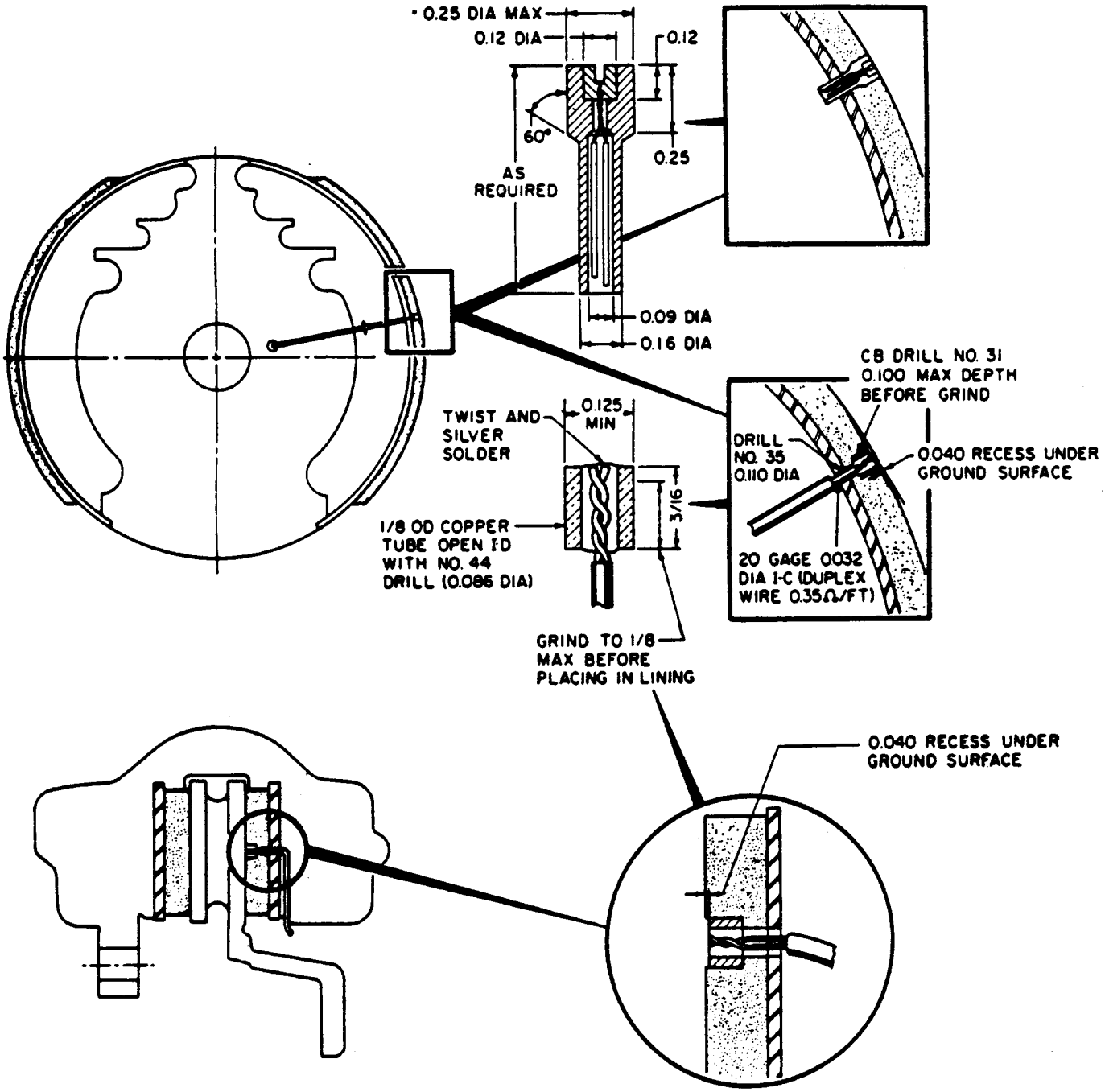

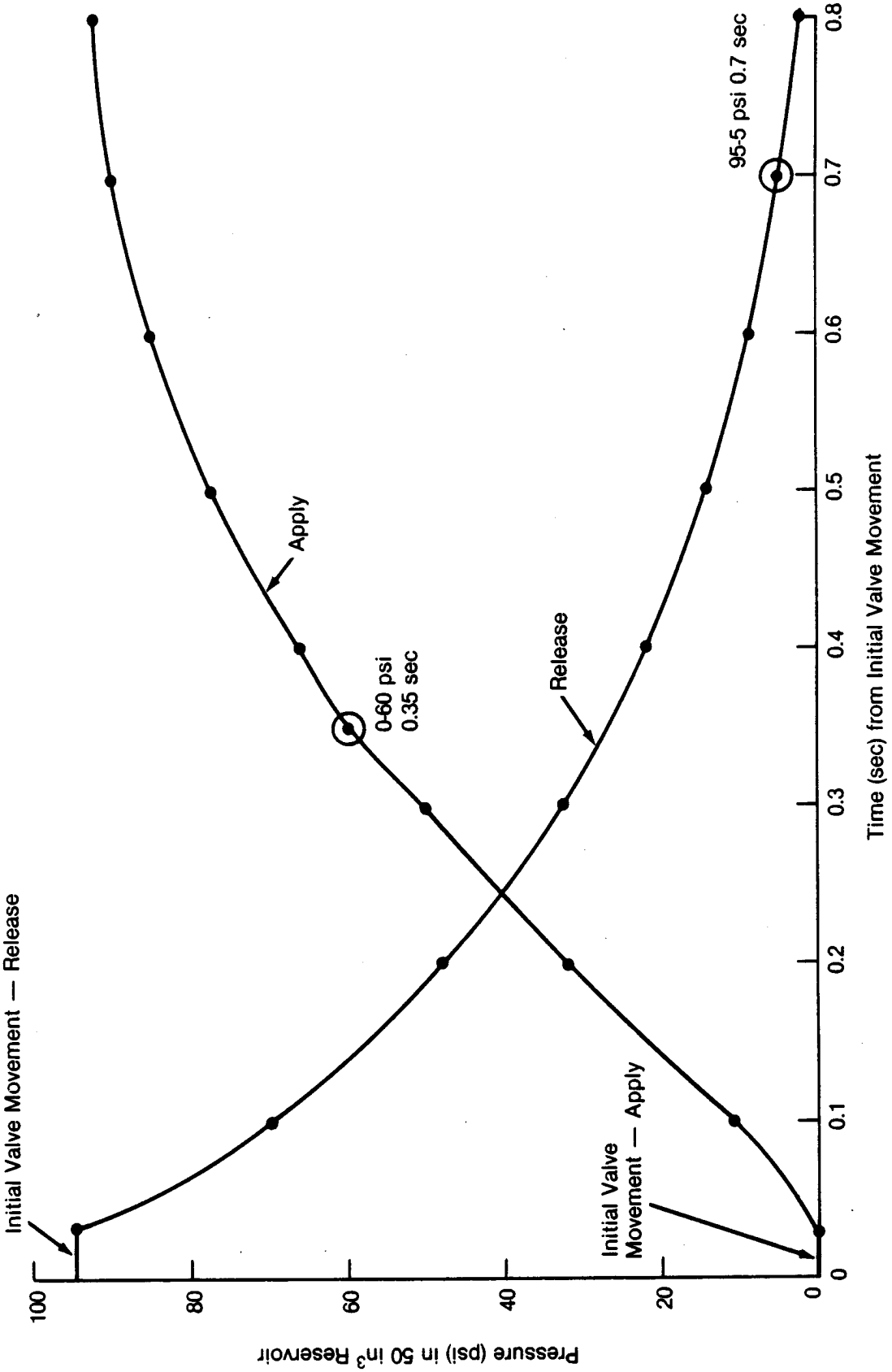

Figure 3. Pressure vs. Time for 50 in³ Test Reservoir.

BILLING CODE 4910–59–C

Table I.—Stopping Sequence

1. Burnish.
2. Stops on a peak friction coefficient surface of 0.5:
   (a) With the vehicle at gross vehicle weight rating (GVWR), stop the vehicle from 30 mph using the service brake, for a truck tractor with a loaded unbraked control trailer.
   (b) With the vehicle at unloaded weight plus up to 500 lbs., stop the vehicle from 30 mph using the service brake, for a truck tractor.
3. Manual adjustment of the service brakes allowed for truck tractors, within the limits recommended by the vehicle manufacturer.
4. Other stops with vehicle at GVWR:
   (a) 60 mph service brake stops on a peak friction coefficient surface of 0.9, for a truck tractor with a loaded unbraked control trailer, or for a single-unit vehicle.
   (b) 60 mph emergency brake stops on a peak friction coefficient of 0.9, for a single-unit vehicle. Truck tractors are not required to be tested in the loaded condition.
5. Parking brake test with the vehicle loaded to GVWR.
6. Manual adjustment of the service brakes allowed for truck tractors and single-unit vehicles, within the limits recommended by the vehicle manufacturer.
7. Other stops with the vehicle at unloaded weight plus up to 500 lbs.:
   (a) 60 mph service brake stops on a peak friction coefficient surface of 0.9, for a truck tractor or for a single-unit vehicle.
   (b) 60 mph emergency brake stops on a peak friction coefficient of 0.9, for a truck tractor or for a single-unit vehicle.
8. Parking brake test with the vehicle at unloaded weight plus up to 500 lbs.
9. Final inspection of service brake system for condition of adjustment.

TABLE II.—STOPPING DISTANCE IN FEET

Vehicle speed in miles per hour	Service brake				Emergency brake	
	PFC 0.9	PFC 0.9	PFC 0.9	PFC 0.9	PFC 0.9	PFC 0.9
	(1)	(2)	(3)	(4)	(5)	(6)
20	32	35	38	40	83	85
25	49	54	59	62	123	131
30	70	78	84	89	170	186
35	96	106	114	121	225	250
40	125	138	149	158	288	325
45	158	175	189	200	358	409
50	195	216	233	247	435	504
55	236	261	281	299	520	608
60	280	310	335	355	613	720

Note: (1) Loaded and unloaded buses; (2) Loaded single unit trucks; (3) Unloaded truck tractors and single unit trucks; (4) Loaded truck tractors tested with an unbraked control trailer; (5) All vehicles except truck tractors; (6) Unloaded truck tractors.

TABLE III.—BRAKE RETARDATION FORCE

Column 1 Brake Retardation Force, GAWR	Column 2 Brake Chamber Pressure, PSI
0.05	20
0.12	30
0.18	40
0.25	50
0.31	60
0.37	70
0.41	80

TABLE IV.—[RESERVED]

TABLE V.—BRAKE CHAMBER RATED VOLUMES

Brake chamber type (Nominal area of piston or diaphragm in square inches)	Column 1 Full stroke (Inches)	Column 2 Rated volume (Cubic Inches)
Type 9	1.75/2.10	25
Type 12	1.75/2.10	30
Type 14	2.25/2.70	40

TABLE V.—BRAKE CHAMBER RATED VOLUMES—Continued

Brake chamber type (Nominal area of piston or diaphragm in square inches)	Column 1 Full stroke (Inches)	Column 2 Rated volume (Cubic Inches)
Type 16	2.25/2.70	50
Type 18	2.25/2.70	55
Type 20	2.25/2.70	60
Type 24	2.25/2.70	70
Type 30	2.50/3.20	95
Type 36	3.00/3.60	135

Issued on: May 23, 1996.

Barry Felrice,

Associate Administrator for Safety Performance Standards.

[FR Doc. 96–13557 Filed 5–30–96; 8:45 am]

BILLING CODE 4910–59–P

DEPARTMENT OF COMMERCE

National Oceanic and Atmospheric Administration

50 CFR Part 630

[Docket No. 960314073–6145–02; I.D. 030896E]

RIN 0648–AI23

Atlantic Swordfish Fishery; 1996 Quotas, Minimum Size, Adjustment

AGENCY: National Marine Fisheries Service (NMFS), National Oceanic and Atmospheric Administration (NOAA), Commerce.

ACTION: Final rule.

SUMMARY: NMFS issues this final rule to amend the regulations governing the Atlantic swordfish fishery to: Reduce the annual total allowable catch (TAC) to 2,625 metric tons (mt) dressed weight (dw) via a split season (June 1 - May 31), decrease the minimum size to 73 cm (29 inches) cleithrum to caudal keel measure, eliminate the trip allowance for undersized fish, and make reporting requirements consistent with the

current logbook program. The intent of this action is to rebuild the swordfish resource while allowing harvest of swordfish consistent with recommendations of the International Commission for the Conservation of Atlantic Tunas (ICCAT).

EFFECTIVE DATE: The rule is effective June 4, 1996.

ADDRESSES: Copies of Biological Opinions and a Final Environmental Assessment/Regulatory Impact Review (EA/RIR) supporting this action may be obtained from Rebecca Lent, Highly Migratory Species Management Division, Office of Fisheries Conservation and Management, National Marine Fisheries Service, 1315 East-West Highway, Silver Spring, MD 20910. Comments regarding the burden-hour estimate or any other aspect of the collection-of-information requirement contained in this rule should be sent to Rebecca Lent and to the Office of Management and Budget (OMB), (0648–0016), Attention: NOAA Desk Officer, Washington, DC 20503.

FOR FURTHER INFORMATION CONTACT: Rebecca Lent, 301–713–2347; fax: 301–713–0596.

SUPPLEMENTARY INFORMATION: The Atlantic swordfish fishery is managed under the Fishery Management Plan for Atlantic Swordfish and its implementing regulations at 50 CFR part 630 issued under the authority of the Magnuson Fishery Conservation and Management Act (16 U.S.C. 1801 *et seq.*) and the Atlantic Tunas Convention Act (ATCA) (16 U.S.C. 971 *et seq.*). Regulations issued under the authority of ATCA carry out the recommendations of ICCAT.

Background information about the need for revisions to Atlantic swordfish fishery regulations was provided in the proposed rule (61 FR 15212, April 5, 1996) and is not repeated here.

Management Measures

These regulatory changes will improve NMFS' ability to implement the ICCAT recommendations and further the management objectives for the domestic swordfish fisheries:

1. TAC and Fishing Year Definition

NMFS changes the definition of the fishing year for purposes of TAC implementation to June 1 - May 31. NMFS also decreases the annual TAC by 359 mt to 2,625 mt, which is consistent with the 1994 ICCAT recommendation. All weights are in dw of swordfish, unless indicated otherwise. The TAC is divided between a directed-fishery quota of 2,371 mt and a bycatch quota of 254 mt. The directed-fishery quota is divided into two 1,185.5 mt semiannual quotas for each of the 6-month periods, June 1 through November 30, and December 1 through May 31. Each of the 1,185.5 mt semiannual quotas is further subdivided into a drift gillnet quota of 23.45 mt and a longline and harpoon quota of 1,162.05 mt. The semiannual TAC for the longline and harpoon swordfish fishery is reduced by the estimated semiannual dead discards of 97.6 mt to yield a landing quota of 1,064.44 mt for each of the two semiannual periods.

Following a closure of the directed longline fishery in any semiannual period, any overharvest or underharvest will be added to or subtracted from the bycatch quota of 254 mt. The ability to add or subtract underage or overage ensures that the United States will abide by the annual ICCAT quotas.

The special set-aside quota for harpoon gear remains at 10 mt.

Due to the need to meet observer coverage requirements for the drift gillnet fishery, the starting date for this gear type only, for their 1996 quota, is delayed until July 1, 1996. Contracts, research projects, and other arrangements for observer coverage necessary due to the Category I status of the drift gillnet fishery could not be modified in 1996 to accommodate the revised starting date of June 1, 1996. Thus, the first semiannual drift gillnet quota will be applicable during the period of July 1 - November 30, 1996, and the second semiannual quota will apply to the period of December 1, 1996 to May 31, 1997. The bridge period quota (see below) will be applied for drift gillnet vessels during the period of January 1 - June 30, 1996. Thus, drift gillnetters may fish prior to July 1, 1996, subject to the bridge period quota, which has not been reached to date. The revised fishing year and semiannual periods established herein for other fishing categories will be applied for the drift gillnet fishery beginning June 1, 1997.

2. Bridge Period TAC

A bridge period TAC is determined for the first 5 months of 1996 at a level equal to five twelfths of the 1995 U.S. quota, which is equivalent to 1,149.5 mt (106 mt bycatch, 1021 mt longline, and 22.5 mt drift gillnet). As discussed above, drift gillnet vessels may continue fishing through June 1996 as long as the bridge period quota has not been filled.

3. Alternative Minimum Size

The final rule implements the ICCAT-recommended alternative minimum size of 119 cm (47 inches) lower jaw fork length (LJFL) with zero tolerance for undersized fish, meaning that no swordfish less than this smaller minimum size may be retained on board fishing vessels. Therefore, the current tolerance of undersized fish (15 percent by number per trip) is eliminated. The 119 cm (47'') LJFL is equivalent to a cleithrum to caudal keel measure (CK) of 73 cm (29 inches) or 15 kg (33 lb) dw.

4. Other Changes

Changes are made to the regulatory text to make vessel reporting requirements consistent with the current logbook program.

Comments and Responses

1. Quota Reduction and Allocation

Comment: Most comments supported the reduction in TAC as recommended by ICCAT. There was some concern, however, over the calculation of discards, both in terms of the rate used and the fact that only the United States deducts this estimate from their allowable catch.

Response: NMFS agrees that a reduction in TAC to the level recommended by ICCAT is not only necessary under ATCA but also desirable, given that current catch levels exceed replacement yield. The longline discard rate applied in setting the TAC is identical to that used in 1995. However, as data become available, this discard rate could be revised to account for the modification in the minimum size. The United States reports estimated longline discards of undersized swordfish to ICCAT, and had committed, for 1995 and 1996 only, to reducing the TAC accordingly.

Comment: Some commenters felt that the drift gillnet quota should be higher given the number of participants and the derby nature of the fishery. Another commenter suggested that gear-specific quotas be discontinued, to be replaced with a fixed season for the driftnet fishery of 2 months.

Response: The percentage share allocated to the longline and drift gillnet fishery is identical to that used in 1994 and 1995 and is based on the share of total catch harvested by these user groups in 1988. NMFS disagrees with the suggestion of having a season for drift gillnetting rather than a quota, since this would only intensify the derby-fishing nature of this gear category, particularly since it is open access.

2. Split Season

Comment: Some commenters agreed with the split season as one option to improve the economic condition of the swordfish fishermen under declining

quotas. They indicated that, for the two periods of high likelihood for a swordfish longline directed fishery closure, April/May are good months for yellowfin tuna, while October/November have historically been low price months for swordfish.

Response: NMFS agrees that the new semiannual periods might allow for the best possible prices for swordfish catch, which is particularly important to mitigate decline in exvessel revenue given the reduction in TAC.

Comment: Some commenters expressed concern over the possible increased interaction with bluefin tuna and/or protected species given the change in the fishing season.

Response: The swordfish longline fishery has never been closed during the months of June or July; therefore, it is unlikely that the pattern of interaction with bluefin or other bycatch species would be modified by this change in the fishing season. Fishing with the use of drift gillnets in the first half of the existing semiannual period generally began in earnest around mid-June; therefore, it is not evident that a June 1 starting date would modify the pattern of protected species interaction. However, given the need to meet observer coverage requirements for the drift gillnet fishery, the starting date for this gear type for 1996 only is delayed until July 1, 1996, to accommodate arrangements already in place for this year's fishery. Thus, the semiannual drift gillnet 1996 quota will be applicable during the period of July 1 - November 30, 1996, and the second semiannual quota will hold during the period of December 1, 1996 to May 31, 1997. The revised fishing year and semiannual periods thus will be applied for the drift gillnet fishery beginning June 1, 1997, unless further information and/or analyses received before that date warrant a change in this regulation.

3. Revised Minimum Size

Comment: Some commenters felt that the revised minimum size would lead to decreased discards and facilitate enforcement. Others felt that the minimum size should be increased to 50 lb and/or the average weight at first reproduction (80 kg round weight, or 132 lb dw). Some commenters also suggested that fishers be allowed to retain swordfish less than the minimum size for their own consumption or for charity purposes.

Response: NMFS agrees that implementation of the alternative minimum size could lead to a reduction in the longline discard rate to the extent that undersized fish that are now harvested under the 15 percent tolerance and/or discarded at sea are within the new, lower minimum size range. An increase in the minimum size to 50 lb or 132 lbs (reproductive weight) could lead to a significant increase in the discard rate. Finally, retention of swordfish less than the alternative minimum size could be counter to the ICCAT recommendation, with the exception of the Second Harvest program which has been approved by ICCAT.

Comment: Several commenters suggested that NMFS consider time-area closures to reduce the catch of undersized swordfish.

Response: Preliminary research conducted by NMFS indicates certain areas in which there is relatively higher interaction with undersized swordfish. However, a complete analysis should be conducted on the potential time-area closures and the impact of these closures on the fishery. In addition, the revised minimum size and fishing season could have an effect on the rate of small fish interaction. Time-area closures may be considered in future rulemaking if analysis warrants.

Comment: It was noted that the ICCAT recommendation would facilitate a possible ban on sale of swordfish under the minimum size if a country adopts the alternative minimum size with zero tolerance. This would allow the United States to halt the import of undersized swordfish from Nations that do not comply with the ICCAT recommendation.

Response: NMFS agrees that a ban on the sale of Atlantic swordfish under the lower minimum size would facilitate enforcement and ensure that ICCAT conservation efforts are not hampered by harvest and export to the United States of undersized swordfish from non-complying Nations. However, given the considerable volume of domestic and imported Pacific swordfish that is handled nationwide, NMFS must establish an enforceable system to document shipments of swordfish harvested outside the management unit. Such a system is under consideration but will require some time to comply with Paperwork Reduction Act (PRA) requirement. In the meantime, since adoption of the alternative minimum size will facilitate U.S. Atlantic enforcement and may reduce the discard rate, NMFS is implementing the alternative minimum size.

4. Other

Comment: There were continued comments regarding the need to allow a 14-day offloading period for swordfish during a closure due to the market effects of a sudden increase in landings.

Response: NMFS agrees that closure dates can cause a market glut and lower prices. However, even a 14-day offloading window can cause such a market glut, since vessels may have an incentive to wait until the last day or two of this window to sell their swordfish. In addition, given that the concern over sudden increase in supply comes primarily from long-distance vessels that tend to take longer trips, there is concern about the effect of further delaying the offloading on the quality of the swordfish landed. Finally, a 14-day window only would encourage vessels to return to port at the last minute, with possible consequences on the catch rate in the final days, leading to even earlier closure dates.

Comment: There were several comments on issues that are beyond the scope of this rule, including: Requiring equal coverage for vessels of all gear types, with a minimum of 50 percent coverage; establishing target catch criteria for swordfish bycatch during closure of the directed fishery; proposals to extend the fishing season; allowing more than

30 days to comment on a proposed rule; and monitoring the U.S. swordfish catch in the south Atlantic.

Response: These issues are beyond the scope of this rulemaking, the primary purpose of which is to implement the 1996 TAC via the split season, along with revising the minimum size. NMFS will consider the comments above in future rulemaking. With respect to the monitoring of swordfish catch in the South Atlantic, all U.S. permitted vessels are currently subject to a reporting requirement, including negative reporting.

Based on consideration of comments received, only one change was made to the proposed rule, notably the date of effectiveness of the split season for the drift gillnet fishery, as noted above.

Classification

This final rule is published under the authority of ATCA. The Assistant Administrator for Fisheries, NOAA has determined that the regulations contained in this rule are necessary to implement the recommendations of ICCAT and are necessary for management of the Atlantic swordfish fishery. The Assistant General Counsel for Legislation and Regulation of the Department of Commerce certified to the Chief Counsel for Advocacy of the Small Business Administration that the proposed rule, if adopted, would not have a significant economic impact on a substantial number of small entities. The 1996 TAC represents about a 12–percent reduction from the TAC of the

previous year, which could result in short-term potential losses in gross revenue of about $3.2 million. However, these potential losses will be at least partially offset by increases in price due to declining supply (demand is price-inelastic) and the split season. In addition, pelagic longline vessels may redirect fishing effort to Atlantic tunas, dolphin fish, and other species, as occurred in the 1995 season. As a result, a regulatory flexibility analysis was not prepared. The RIR provides further discussion of the economic effects of the rule.

This action has been determined to be not significant for purposes of E.O. 12866.

NMFS has determined that there is good cause to waive partially the 30-day delay in the effective date normally required by section 553(d) of the Administrative Procedure Act. Since this fishery is underway, early implementation of the new TAC and minimum size will ensure effective implementation of the ICCAT recommendations.

Notwithstanding any other provision of law, no person is required to respond to nor shall a person be subject to a penalty for failure to comply with a collection of information subject to the requirements of the PRA unless that collection of information displays a currently valid OMB Control Number.

This final rule includes changes to the regulatory text regarding vessel reporting requirements in an effort to be consistent with changes in the logbook program. However, there are no new collection-of-information requirements since the proposed rule simply clarifies requirements that have been approved by the OMB under Control Number 0648–0016 in 15 CFR part 902. Public reporting burden for this collection of information is estimated to average 2 minutes for logbook records and trip summaries.

These estimates include the time for reviewing instructions, searching existing data sources, gathering and maintaining the data needed, and completing and reviewing the collection of information. Send comments regarding this burden estimate or any other aspects of this collection of information, including suggestions for reducing this burden, to NMFS and OMB (see **ADDRESSES**).

NMFS issued biological opinions under the Endangered Species Act on September 1, 1995, and on February 2, 1996, indicating that the level of impact and marine mammal takes from the longline and harpoon, and drift gillnet swordfish fishery is not likely to jeopardize the continued existence of any sea turtle species or any marine mammal populations.

List of Subjects in 50 CFR Part 630

Fisheries, Fishing, Reporting and recordkeeping requirements, Treaties.

Dated: May 24, 1996.

Gary Matlock,

Program Management Officer, National Marine Fisheries Service.

For the reasons set out in the preamble, 50 CFR part 630 is amended as follows:

PART 630—ATLANTIC SWORDFISH FISHERY

1. The authority citation for part 630 continues to read as follows:

Authority: 16 U.S.C. 1801 *et seq.* and 16 U.S.C. 971 *et seq.*

2. In § 630.5, paragraph (a)(1) is revised to read as follows:

§ 630.5 Recordkeeping and reporting.

(a) *Fishing vessel reports.* (1) The owner and operator of a vessel for which a vessel permit has been issued under § 630.4 must ensure that a daily logbook form is maintained of the vessel's swordfishing effort, catch, and disposition on logbook forms available from the Science and Research Director. Such forms must be submitted to the Science and Research Director postmarked not later than the 7th day after sale of the swordfish off-loaded from a trip. If no fishing occurred during a month, a report so stating must be submitted in accordance with instructions provided with the logbook forms. Logbooks must be kept on board the vessel at all times.

* * * * *

3. In § 630.7, paragraph (q) is revised to read as follows:

§ 630.7 Prohibitions.

* * * * *

(q) Possess on board a vessel a swordfish that is smaller than the minimum size specified in § 630.23(a).

* * * * *

4. Section 630.20 is revised to read as follows:

§ 630.20 Fishing Year.

The fishing year is June 1 through July 31.

5. In § 630.23, paragraph (b) is removed, paragraphs (c) and (d) are redesignated as paragraphs (b) and (c), respectively, and the first sentence of paragraph (a) and the last sentence of newly designated paragraph (b) are revised to read as follows:

§ 630.23 Harvest limitations.

(a) *Minimum size.* The minimum allowable size for possession on board a fishing vessel for a swordfish taken from the management unit is 29 inches (73 cm) carcass length, measured along the body contour (i.e., a curved measurement) from the cleithrum to the anterior portion of the caudal keel (CK measurement) or, if swordfish are weighed, 33 lb (15 kg) dressed weight.

* * *

(b) * * * A shark-bit swordfish for which the remainder of the carcass is less than the minimum size limit specified in paragraph (a) of this section may not be landed.

* * * * *

6. In § 630.24, paragraphs (b)(1), (d)(4), and (e) are revised, paragraph (b)(2) is redesignated as paragraph (b)(4), and new paragraphs (b)(2) and (b)(3) are added to read as follows:

§ 630.24 Quotas.

* * * * *

(b) * * *

(1) The directed fishery quota for the period January 1, 1996, through May 31, 1996, is 1,021 mt dressed weight for the longline fishery, 22.5 mt dressed weight for the drift gillnet fishery, and 106 mt dressed weight for the bycatch fishery.

(2) The annual quota for the directed fishery for swordfish is 2,371 mt dressed weight, divided into two semiannual quotas as follows:

(i) For the semiannual period June 1 through November 30:

(A) 23.45 mt dressed weight, that may be harvested by drift gillnet.

(B) 1,162.05 mt dressed weight that may be harvested by longline and harpoon. To account for harvested fish that are discarded dead, only 1064.44 mt dressed weight, may be landed in this category.

(ii) For the semiannual period December 1 through May 31:

(A) 23.45 mt dressed weight that may be harvested by drift gillnet.

(B) 1,162.05 mt dressed weight that may be harvested by longline and harpoon. To account for harvested fish that are discarded dead, only 1064.44 mt dressed weight may be landed in this category.

(3) Notwithstanding any other provision of this part, the sub-quotas for the drift gillnet fishery for January 1 - November 30, 1996, are available as follows:

(i) For the period January 1 through June 30, 22.5 mt dressed weight; and

(ii) For the period July 1 through November 30, 23.45 mt dressed weight.

* * * * *

(d) * * *

(4) Any adjustments to the 12-month directed-fishery quota will be apportioned equally between the June 1 through November 30 and December 1 through May 31 semiannual periods.

* * * * *

(e) NMFS may adjust the December 1 through May 31 semiannual directed-fishery quota and gear quotas to reflect actual catches during the June 1 through November 30 semiannual period, provided that the 12-month directed-fishery and gear quotas are not exceeded.

* * * * *

7. In § 630.25, the second sentence of paragraph (b) is revised to read as follows:

§ 630.25 Closures and bycatch limits.

* * * * *

(b) * * * The procedures of paragraph (a)(1) of this section notwithstanding, during the June 1 through November 30 semiannual period, swordfish not exceeding 21,500 lb (9,752 kg), dressed weight, may be set aside for the harpoon segment of the fishery. * * *

* * * * *

[FR Doc. 96–13690 Filed 5–28–96; 4:25 pm]

BILLING CODE 3510–22–F

---

50 CFR Part 672

[Docket No. 960228053–6142–02; I.D. 022296E]

RIN 0648–AI56

Groundfish of the Gulf of Alaska; Pollock Seasonal Allowances

AGENCY: National Marine Fisheries Service (NMFS), National Oceanic and Atmospheric Administration (NOAA), Commerce.

ACTION: Final rule.

SUMMARY: NMFS issues a final rule to implement Amendment 45 to the Fishery Management Plan for Groundfish of the Gulf of Alaska (FMP). This rule combines the third and fourth quarterly allowances for pollock in the three statistical areas of the combined Western and Central (W/C) Regulatory Area into single seasonal allowances that will become available on September 1 of each fishing year. Changes to the final 1996 harvest specifications of Gulf of Alaska (GOA) pollock are also made to reflect the revised seasonal allowances. These measures are necessary to address management problems that have been identified by the fishing industry. They are intended to further the management objectives of the FMP.

EFFECTIVE DATE: May 30, 1996.

ADDRESSES: Copies of Amendment 45 and the Environmental Assessment/Regulatory Impact Review (EA/RIR) prepared for Amendment 45 may be obtained from the North Pacific Fishery Management Council, 605 W. 4th Ave. Suite #306, Anchorage, AK 99501.

FOR FURTHER INFORMATION CONTACT: Kent Lind, (907) 586–7228.

SUPPLEMENTARY INFORMATION: The pollock fishery in the exclusive economic zone of the GOA is managed by NMFS under the FMP. The FMP was prepared by the North Pacific Fishery Management Council (Council) under the Magnuson Fishery Conservation and Management Act (Magnuson Act) and is implemented by regulations found at 50 CFR part 672. General regulations governing U.S. fisheries are also found at 50 CFR part 620.

Background

Amendment 45 removes the requirement that the total allowable catch (TAC) specified for pollock in three statistical areas of the W/C Regulatory Area be divided into four equal quarterly allowances and replaces it with more flexible language requiring that the TACs be divided into seasonal allowances rather than quarterly allowances. Amendment 45 authorizes NMFS to establish the number and timing of seasonal allowances in regulation. The Council's objective in adopting Amendment 45 was to allow NMFS to combine by regulatory amendment the third quarter (July 1) and fourth quarter (October 1) allowances for pollock in the statistical areas of the W/C Regulatory Area into single seasonal allowances that would become available in September or October.

The action has the following objectives: (1) Reduced chum salmon bycatch, which has been high during the third quarter (July 1) opening; (2) reduced scheduling conflicts with summer salmon processing activities; (3) reduced operating costs for industry; and (4) reduced risk of harvest overruns during extremely short openings. Additional information on this action may be found in the preamble to the proposed rule published in the Federal Register on March 12, 1996 (61 FR 9972) and the EA/RIR prepared for this action. Public comment on the proposed action was invited through April 22, 1996. NMFS received 11 written letters of comment. The comments are summarized and responded to below in the response to comments section.

The only change from the proposed rule is a modification in the opening date for the Western Regulatory Area from October 1 to September 1 for the reasons stated below. This change is reflected in § 672.23(e), which establishes fishing seasons, and section 4 and table 3 of the final 1996 harvest specifications.

At its January 1996 meeting, the Council considered opening date options of September 1, September 15, and October 1 that would apply to the third season in both the W/C Regulatory Areas. However, the Council subsequently recommended that NMFS implement a modified proposal that would establish separate third season opening dates of September 1 in the Central Regulatory Area and October 1 in the Western Regulatory Area. This modified proposal was submitted to the Council by a coalition of Bering Sea-based processors and fishermen with the intent of preserving the ability of Bering Sea-based vessels to fish in the Western Regulatory Area after the closure of the Bering Sea pollock non-roe season. The proposed rule included these separate opening dates as recommended by the Council.

Based on changing circumstances in the pollock fishery and information submitted during the comment period on the proposed rule, NMFS has changed the final rule from the proposed rule to reflect a single opening date of September 1 for both the W/C Regulatory Areas. The reasons for this change are as follows: First, the Council at its April 1996 meeting made a final recommendation that NMFS delay the start of the Bering Sea pollock non-roe season from August 15 to September 1 for both the inshore and offshore sectors. If approved, this regulatory amendment would become effective for the 1996 pollock non-roe season. In 1995 the inshore sector Bering Sea pollock non-roe season lasted 39 days and NMFS expects the 1996 season to last approximately as long. Delaying the Bering Sea pollock non-roe season until September 1 is likely to extend the season into the first or second week of October. Consequently, NMFS believes that an October 1 opening date for the Western Regulatory Area no longer holds any particular advantage for the Bering Sea-based fleet, which was the only sector of the industry that supported this particular opening date.

Second, NMFS has received extensive written comments from Western Regulatory Area-based fishermen and processors who oppose an October 1 opening date for the Western Regulatory Area for safety reasons. This sector of the industry suggests that because weather conditions are likely to be worse in October, an October 1 opening date will pose greater safety risks for

smaller vessels than would a September 1 opening date.

Third, NMFS has received extensive written comments from Western Regulatory Area-based fishermen and processors who believe an October 1 opening date would cause them to be preempted by larger and more numerous Bering Sea-based vessels. Although a delay in the Bering Sea pollock non-roe season would largely eliminate these concerns, NMFS believes that a compelling reason no longer exists to treat the Western Regulatory Area separately from the rest of the GOA.

Finally, scheduling fisheries in various areas to operate simultaneously will disperse effort resulting in more manageable fisheries and a more equitable distribution of fishing opportunity. A September 1 pollock opening date for the Western Regulatory Area would bring the season for this area into line with the rest of the GOA, as well as the Bering Sea if the Council's recommendation to delay the pollock non-roe season is approved.

Regulatory Changes Made by This Action

This action combines the third and fourth quarterly allowances of pollock TAC for the statistical areas of the W/C Regulatory Area into single seasonal allowances equal to 50 percent of the annual pollock TAC for each statistical area. This combined seasonal allowance will become available on September 1. This action retains the requirements that (1) within any fishing year, shortfalls in the harvest of one seasonal allowance be proportionately added to subsequent seasonal allowances, resulting in a sum for each seasonal allowance not to exceed 150 percent of the original seasonal allowance; and (2) harvests in excess of a seasonal allowance be deducted proportionately from subsequent seasonal allowances.

Response to Comments

No comments opposed Amendment 45 in general (or supported retaining the status quo of four quarterly allowances). Six letters of comment from representatives for Western Regulatory Area-based pollock fishermen and processors supported a September 1 opening date for this area but opposed an October 1 opening date. One letter of comment from a representative for Central Regulatory Area-based pollock fishermen and processors supported a September 1 opening date for this area but was neutral on the Western Regulatory Area opening date. No comments were received that favored an October 1 opening date for the Western Regulatory Area. The following paragraphs summarize and respond to the comments received on the proposed rule.

Comment 1. Prior to the Council's decision at the January 1996 meeting to establish separate opening dates, no discussion or analysis occurred of separate opening dates for the W/C Regulatory Areas. Both the Council's Scientific and Statistical Committee and Advisory Panel recommended that the Council establish a September 1 opening date for both the W/C Regulatory Areas. In addition, no prior notice was provided to the public that the Council was considering separate opening dates. As a result, Western Regulatory Area-based fishermen did not have adequate opportunity to comment on the effects of an October 1 opening date on their fleet.

Response. NMFS has changed the proposed rule to establish a single opening date of September 1 for both the W/C Regulatory Areas.

Comment 2. Considerable support exists within the industry for reconsidering the decision to separate the W/C Regulatory Area opening dates, as evidenced by the 17 to 2 vote by the Advisory Panel at the April 1996 Council meeting, in support of a simultaneous W/C Regulatory opening date of September 1.

Response. See response to comment 1.

Comment 3. The Council's adoption of different opening dates for the W/C Regulatory Areas was extremely unfair to Western Regulatory Area fishermen who have sought to increase their involvement in the administrative process. The Council's action was taken without any public notice, with little or no understanding of potential impacts on small boat fishermen and communities, and with no public discussion of this unanticipated alternative by Council members or NMFS. This action can best be described as a ''sneak attack'' because Western Regulatory Area fishermen were not given a reasonable opportunity to defend themselves on this issue.

Response. See response to comment 1.

Comment 4. When the Council and NMFS make decisions that result in allocations among fishermen, both fundamental fairness and the law dictate a heightened level of public participation and a strong administrative record. This process is necessary so that the Council, NMFS, and the Secretary of Commerce are fully informed of the potential impacts of the proposed actions. Although case law allows a tainted administrative record to be cured by subsequent comments and internal Agency analysis of the objections raised, this ''after the fact'' procedure does not cure the fundamentally unfair nature of this particular decision by the Council. NMFS should not attempt to cure this tainted administrative record simply to justify an improperly motivated decision.

Response. This comment is mute in light of NMFS' decision to adopt a single opening date of September 1 for both the Western and Central Regulatory Areas.

Comment 5. The EA/RIR did not evaluate the impacts of an October 1 Western Regulatory Area opening date on resident small-boat fishermen or the coastal communities of the Western GOA which are dependent on the flow of fish products for employment and local tax revenues. Nor did the analysis address the possible loss of the October 1 third trimester release to all fishermen if NMFS believes that the vessel capacity will exceed the quota. A separate October 1 date for the Western Regulatory Area was beyond the scope of the EA/RIR, and we seriously question the legality of adopting a measure that was not subject to a proper analytical or public review.

Response. See response to comment 4.

Comment 6. The proposed October 1 opening date for the Western Regulatory Area is a substantial reallocation of the pollock resource, which treats local small-boat fishermen unfairly. National standard 4 requires that any allocation of fishing privileges be done in a manner that is fair and equitable to all fishermen. An October 1 opening will invite massive participation by the Bering Sea-based pollock fleet to the disadvantage of smaller vessels based in the Western Regulatory Area. In addition, eliminating the July opening would effectively eliminate this small boat fleet's fishery, which has occurred primarily in the third quarter and secondarily in the fourth quarter of each year. These vessels have traditionally and almost exclusively fished in the third quarter (July 1) opening in the Western Regulatory Area and will face increased safety risks if required to fish this quota in October. If the July allowance is combined with the fourth quarter allowance and exposed to the escalating fishing pressure of the entire Bering Sea and GOA fleet, the impact will be to reallocate the entire third quarter fishery from a resident small-boat fleet to the Dutch Harbor and Kodiak fleets. The majority of these small Western Regulatory Area-based vessels will be unable to establish Kodiak markets to participate in the September 1 Central Regulatory Area

opening and their small size makes it impossible for them to participate in the Bering Sea pollock non-roe season.

Response. See response to comment 1.

Comment 7. Delaying the third seasonal allowance in the Western Regulatory Area until October 1 when the Bering Sea pollock fishery is closed will greatly increase effort in the Western Regulatory Area. This will make the fishery more difficult to manage and is in conflict with one of the stated objectives of Amendment 45, easing the effort in the GOA pollock fisheries. No substantive justification exists for how the October 1 opening date satisfies the third and critical objective of the proposed amendment.

Response. The changes made in the final rule which establish a single opening date of September 1 for both the Central and Western Regulatory Areas and the Council's April 1996 recommendation to delay the Bering Sea pollock non-roe season until September 1, if adopted, would result in a single opening date of September 1 for both the Bering Sea and GOA.

Comment 8. An October 1 start date in the Western Regulatory Area is nothing more than punishment to Sand Point Boats for political reasons. These boats are the smallest boats in the pollock fleet. Asking operators of these boats to start their fishery on October 1 is to invite injuries or worse.

Response. See response to comment 1.

Comment 9. The decision to delay the Western Regulatory Area opening until October 1 means the difference between a multi-day fishery and a fishery that may well be measured in hours. This means that local boats will have taken away from them a reasonable opportunity to make a living so that bigger Kodiak and Dutch Harbor boats can swoop in for a one-tow event.

Response. See response to comment 1.

Comment 10. The proposed October 1 opening date for the Western Regulatory Area isolates one area and subjects it to uncontrollable fishing pressure. The Bering Sea fleet no longer has to choose among the entire W/C Regulatory Area during the last release of pollock. The Kodiak-based fleet of large trawl vessels will be able to fish in the Central Regulatory Area in September and then shift to the Western Regulatory Area in October. The Western Regulatory Area will face not only the local small-boat trawl fleet in October but the combined Bering Sea and Kodiak-based trawl fleet as well. Whenever possible, fisheries in various areas should be scheduled to operate in the same time period to disperse effort. This makes for more manageable fisheries and a more equitable distribution of opportunity.

Response. NMFS concurs. See response to comment 7.

Comment 11. If the October 1 opening date is approved, operators of Western GOA plants estimate they will lose from 11 percent to 15 percent of the pollock that has traditionally been delivered to them. Under the status quo, most of the third quarter pollock fishery in Statistical Areas 610 and 620 was delivered to Western GOA plants. If this opening is shifted to October 1, much of this quota will be harvested instead by Bering Sea-based vessels and delivered to Bering Sea-based plants.

Response. See response to comment 1.

Changes to 1996 Harvest Specifications

Final 1996 harvest specifications for GOA pollock were published in the Federal Register on February 5, 1996 (61 FR 4304). The change from quarterly allowances to three seasonal allowances of pollock TAC amounts specified for the statistical areas of the W/C Regulatory Area requires that the final 1996 specifications be amended. First, footnote 2 to Table 1 is revised to read as follows: ''Pollock is apportioned to three statistical areas in the combined Western/Central Regulatory Area, each of which is further divided into three seasonal allowances (Table 3). In the Eastern Regulatory Area, pollock is not divided into seasonal allowances.''

Second, page 4308 of the final 1996 specifications, section 4, ''Apportionments of Pollock TAC Among Regulatory Areas, Season, and Between Inshore and Offshore Components,'' and Table 3 is amended as follows to reflect the new seasonal allowances of pollock:

4. Apportionments of Pollock TAC Among Regulatory Areas, Seasons, and Between Inshore and Offshore Components

In the GOA, pollock is apportioned by area, season, and inshore/offshore components. Regulations at § 672.20(a)(2)(iv) require that the TAC for pollock in the combined W/C GOA be apportioned among statistical areas; Shumagin (610), Chirikof (620), and Kodiak (630) in proportion to known distributions of the pollock biomass. This measure was intended to provide spatial distribution of the pollock harvest as a sea lion protection measure. Each statistical area apportionment would be further divided into three seasonal allowances (Table 3). Within any fishing year, any unharvested amount of any seasonal allowance of pollock TAC would be added in equal proportions to the subsequent seasonal allowances, resulting in a sum for each seasonal allowance that does not exceed 150 percent of the original seasonal allowance. Similarly, harvests in excess of a seasonal allowance of TAC would be deducted in equal proportions from the remaining seasonal allowances of that fishing year. Directed fishing for pollock in the W/C Regulatory Area (Statistical Areas 610, 620, and 630) may be authorized in seasonal allowances beginning on January 1, June 1, and September 1. The Eastern Regulatory Area pollock TAC of 2,810 metric tons (mt) is not allocated among smaller areas or seasonal allowances.

Regulations at § 672.20(a)(2)(v)(A) require that the domestic annual processing (DAP) apportionment for pollock in all regulatory areas and all seasonal allowances thereof be divided into inshore and offshore components. One hundred percent of the pollock DAP in each regulatory area is apportioned to the inshore component after subtraction of amounts that are determined by the Director, Alaska Region, NMFS (Regional Director) to be necessary to support the bycatch needs of the offshore component in directed fisheries for other groundfish species. The amount of pollock available for harvest by vessels in the offshore component is that amount actually taken as bycatch during directed fishing for groundfish species other than pollock, up to the maximum retainable bycatch amounts allowed under regulations at § 672.20(g).

TABLE 3.—DISTRIBUTION OF POLLOCK IN THE WESTERN AND CENTRAL REGULATORY AREAS OF THE GULF OF ALASKA (W/C GOA). ABC FOR THE W/C GOA IS 52,000 MT. BIOMASS DISTRIBUTION IS BASED ON 1993 SURVEY DATA. TACS ARE EQUAL TO ABC. INSHORE AND OFFSHORE ALLOCATIONS OF POLLOCK ARE NOT SHOWN. ABCS AND TACS ARE ROUNDED TO THE NEAREST 10 MT.

Statistical Area	Biomass percent	1996 TAC	Seasonal allowances [1]		
			First	Second	Third
Shumagin (610)	49.0	25,480	6,370	6,370	12,740
Chirikof (620)	24.7	12,840	3,210	3,210	6,420
Kodiak (630)	26.3	13,680	3,420	3,420	6,840
Total	100.0	52,000	13,000	13,000	26,000

[1] As established under paragraphs (e) and (f) of § 672.23, the first, second, and third seasonal allowances of W/C Regulatory Area pollock TAC amounts are available January 1 and June 1, and September 1, respectively.

Classification

The Regional Director has determined that Amendment 45 is necessary for the conservation and management of the groundfish fishery of the GOA and that it is consistent with the Magnuson Act and other applicable laws.

This rule has been determined to be not significant for the purposes of E.O. 12866.

The Assistant General Counsel for Legislation and Regulation of the Department of Commerce certified to the Chief Counsel for Advocacy of the Small Business Administration when this rule was proposed that this rule would not have a significant economic impact on a substantial number of small entities. The reasons were published in the notice of proposed rulemaking. As a result, a regulatory flexibility analysis was not prepared.

Because NMFS would like to incorporate the text of this rule into a comprehensive consolidation of the Federal regulations implementing the Alaska fishery management plans expected to be published as a final rule in the near future, NMFS is making this rule immediately effective. This rule will not have any substantive impact until July 1, 1996. Consequently, under 5 U.S.C. 553(d)(3), it is unnecessary to delay the effectiveness of it for 30 days.

List of Subjects in 50 CFR Part 672

Fisheries, Reporting and recordkeeping requirements.

Dated: May 23, 1996.

Gary Matlock,

Program Management Officer, National Marine Fisheries Serivce.

For the reasons set out in the preamble, 50 CFR part 672 is amended as follows:

PART 672—GROUNDFISH OF THE GULF OF ALASKA

1. The authority citation for part 672 continues to read as follows:

Authority: 16 U.S.C. 1801, *et seq.*

General Amendments

2. In § 672.20, paragraph (a)(2)(iv); the first sentence of paragraph (a)(2)(v)(A); and paragraph (c)(2) (i) and (ii) are revised to read as follows:

§ 672.20 General limitations.

(a) * * *

(2) * * *

(iv) The TAC for pollock in the combined Western and Central Regulatory Areas will be apportioned among Statistical Areas 610, 620, and 630 in proportion to the distribution of the pollock biomass as determined by the most recent NMFS surveys. Each apportionment will be divided into three seasonal allowances of 25 percent, 25 percent, and 50 percent of the apportionment, respectively, corresponding to the three fishing seasons defined at paragraph (e) of § 672.23. Within any fishing year, any unharvested amount of any seasonal allowance will be added proportionately to all subsequent seasonal allowances, resulting in a sum for each allowance not to exceed 150 percent of the initial seasonal allowance. Within any fishing year, harvests in excess of a seasonal allowance will be deducted proportionately from all subsequent seasonal allowances.

(v) * * * (A) The DAP apportionment of pollock in all regulatory areas will be allocated entirely to vessels catching pollock for processing by the inshore component after subtraction of an amount that is projected by the Regional Director to be caught by, or delivered to, the offshore component incidental to directed fishing for other groundfish species. * * *

* * * * *

(c) * * *

(2) * * * (i) *Applicable after December 31, 1998.* If the Regional Director determines that the amount of a target species or ''other species'' category apportioned to a fishery is likely to be reached, the Regional Director may establish a directed fishing allowance for that species or species group. The amount of a species or species group apportioned to a fishery is the amount identified in the notice of specifications as provided in paragraph (c)(1) of this section as these amounts are revised by inseason adjustments, for that species or species group, as identified by regulatory area, district or statistical area and as further identified according to any allocation of total allowable level of fishing level (TALFF), the apportionment for joint venture processing (JVP), the apportionment for DAP, the seasonal allowance of pollock and, if applicable, as further identified by gear type. In establishing a directed fishing allowance, the Regional Director shall consider the amount of that species or species group or seasonal allowance of pollock that will be taken as incidental catch in directed fishing for other species in the same regulatory area or district. If the Regional Director establishes a directed fishing allowance and that allowance is, or will be, reached before the end of the fishing year or, with respect to pollock, before the end of the season, NMFS will prohibit directed fishing for that species or species group in the specified regulatory area, district or statistical area. If directed fishing for a species or species group is prohibited, any amount of that species or species group greater than the maximum retainable bycatch amount, as calculated under paragraph (g) of this section, may not be retained and must be treated as a prohibited species under paragraph (e) of this section.

(ii) *Applicable through December 31, 1998.* If the Regional Director determines that the amount of a target species or ''other species'' category apportioned to a fishery is likely to be reached, the Regional Director may establish a directed fishing allowance for that species or species group. The

amount of a species or species group apportioned to a fishery is the amount identified in the specifications as provided in paragraph (c)(1) of this section. These amounts are revised by inseason adjustments, for a given species or species group, as identified by regulatory area, district or statistical area, and as further identified according to any allocation of TALFF, the apportionment for JVP, the apportionment for DAP, the seasonal allowance of pollock or, with respect to Pacific cod, to an allocation to the inshore or offshore component and, if applicable, as further identified by gear type. In establishing a directed fishing allowance, the Regional Director should consider the amount of that species group, seasonal allowance of pollock, or allocation of Pacific cod to the inshore or offshore component that will be taken as incidental catch in directed fishing for other species in the same regulatory area, district or statistical area. If the Regional Director establishes a directed fishing allowance and that allowance is or will be reached before the end of the fishing year or, with respect to pollock, before the end of the season, NMFS will prohibit directed fishing for the species or species group in the specified regulatory area, district or statistical area. If directed fishing for a species or species group is prohibited, any amount of that species or species group greater than the maximum retainable bycatch amount, as calculated under paragraph (g) of this section, may not be retained and must be treated as a prohibited species under paragraph (e) of this section.

* * * * *

3. In § 672.23, paragraph (e) is revised to read as follows:

§ 672.23 Seasons.

* * * * *

(e) Subject to other provisions of this part, directed fishing for pollock in the Western and Central Regulatory Areas of the Gulf of Alaska is authorized only during the three seasons:

(1) From 0001, A.l.t., January 1 through 12 noon, A.l.t., April 1;

(2) From 1200, A.l.t., June 1 through 1200, A.l.t., July 1; and

(3) From 1200, A.l.t., September 1 through 2359 A.l.t., December 31.

Nomenclature Amendments

§ 672.20 [Amended]

4. In addition to the amendments set out above, in § 672.20, in paragraph (c)(1), remove all occurrences of the word ''quarterly'' and add in their place the word ''seasonal''.

[FR Doc. 96–13594 Filed 5–30–96; 8:45 am]

BILLING CODE 3510–22–W

---

50 CFR Parts 672 and 675

[Docket No. 900833–1095; I.D. 052396A]

Groundfish of the Gulf of Alaska and the Bering Sea and Aleutian Islands Area; Bycatch Rate Standards for the Second Half of 1996

AGENCY: National Marine Fisheries Service (NMFS), National Oceanic and Atmospheric Administration (NOAA), Commerce.

ACTION: Pacific halibut and red king crab bycatch rate standards; request for comments.

SUMMARY: NMFS announces Pacific halibut and red king crab bycatch rate standards for the second half of 1996. This action is necessary to implement the bycatch rate standards for vessel operators who participate in the Alaska groundfish trawl fisheries under the vessel incentive program. The intent of this action is to reduce prohibited species bycatch rates and promote conservation of groundfish and other fishery resources.

DATES: Effective 12:01 a.m., Alaska local time (A.l.t.), July 1, 1996, through 12 midnight, A.l.t., December 31, 1996. Comments on this action must be received at the following address no later than 4:30 p.m., A.l.t., June 30, 1996.

ADDRESSES: Comments should be mailed to Ronald J. Berg, Chief, Fisheries Management Division, NMFS, P.O. Box 21668, Juneau, AK 99802–1668, Attn: Lori Gravel; or be delivered to 709 West 9th Street, Federal Building, Room 401, Juneau, AK.

FOR FURTHER INFORMATION CONTACT: Susan J. Salveson, 907–586–7228.

SUPPLEMENTARY INFORMATION: The domestic groundfish fisheries in the exclusive economic zone of the Bering Sea and Aleutian Islands management area (BSAI) and Gulf of Alaska (GOA) are managed by NMFS according to the Fishery Management Plan for the Groundfish Fishery of the Bering Sea and Aleutian Islands Area and the Fishery Management Plan for Groundfish of the Gulf of Alaska (FMPs). The FMPs were prepared by the North Pacific Fishery Management Council (Council) under the authority of the Magnuson Fishery Conservation and Management Act. The FMPs are implemented by regulations for the U.S. fisheries at 50 CFR parts 672, 675, and 676. General regulations that also pertain to the U.S. fisheries appear at 50 CFR part 620. Regulations that establish observer coverage requirements are set out at 50 CFR part 677. Bycatch rate standards and the vessel incentive program are described at § 675.26. Halibut and red king crab bycatch rate standards for the first half of 1996 were published in the Federal Register on November 29, 1995 (60 FR 61213). As required by §§ 672.26(c) and 675.26(c), the Director of the Alaska Region, NMFS (Regional Director), has established the bycatch rate standards for the second half of 1996 (July 1 through December 31). These standards were approved by the Council at its April 1996 meeting and are set out in Table 1. The bycatch rate standards are based on the following information:

1. Previous years' average observed bycatch rates.

2. Immediately preceding season's average observed bycatch rates.

3. The bycatch allowances and associated fishery closures specified under §§ 672.20(f) and 675.21.

4. Anticipated groundfish harvests.

5. Anticipated seasonal distribution of fishing effort for groundfish.

6. Other information and criteria deemed relevant by the Regional Director.

TABLE 1.—BYCATCH RATE STANDARDS BY FISHERY FOR THE SECOND HALF OF 1996 FOR PURPOSES OF THE VESSEL INCENTIVE PROGRAM IN THE BSAI AND GOA

Fishery	Bycatch rate standard
Halibut bycatch rate standards (kilogram of halibut/metric ton of groundfish catch)	
BSAI Midwater pollock	1.0
BSAI Bottom pollock	5.0

TABLE 1.—BYCATCH RATE STANDARDS BY FISHERY FOR THE SECOND HALF OF 1996 FOR PURPOSES OF THE VESSEL INCENTIVE PROGRAM IN THE BSAI AND GOA—Continued

Fishery	Bycatch rate standard
BSAI Yellowfin sole	5.0
BSAI Other trawl	30.0
GOA Midwater pollock	1.0
GOA Other trawl	40.0
Zone 1 red king crab bycatch rates standards (number of crab/metric ton of groundfish catch)	
BSAI yellowfin sole	2.5
BSAI Other trawl	2.5

Bycatch Rate Standards for Pacific Halibut

The halibut bycatch rate standards for the 1996 trawl fisheries are unchanged from those implemented in 1995. The Regional Director based standards for the second half of 1996 on anticipated seasonal fishing effort for groundfish species and 1993–96 halibut bycatch rates observed in the trawl fisheries included under the incentive program. In determining these bycatch rate standards, the Regional Director recognized that directed fishing for BSAI Pacific cod by vessels using trawl gear is closed until October 25, 1996 (61 FR 24730, May 16, 1996). Given the present status of halibut bycatch in the yellowfin sole fishery, the Regional Director anticipates that this fishery will close by early June due to halibut bycatch restrictions. The fishery will remain closed until August 15 when the remainder of its halibut bycatch allowance becomes available. The Regional Director also considered the fact that August 15 is opening date of the 1996 Bering Sea pollock 'B' season (§ 675.23(e)) and that the Council has requested that NMFS initiate rulemaking to delay this date until September 1. NMFS anticipates that a proposed rule to implement a pollock 'B' season delay will be published in the Federal Register for public review and comment by mid-June 1996.

The halibut bycatch rate standards for the BSAI yellowfin sole and ''bottom pollock'' trawl fisheries are each set at 5 kilogram (kg) halibut/metric ton (mt) of groundfish. These standards approximate the average annual rates observed on trawl vessels participating in these fisheries since 1992.

The halibut bycatch rate standard for the BSAI and GOA midwater pollock fisheries (1 kg halibut/mt of groundfish) is higher than the bycatch rates normally experienced by vessels participating in these fisheries. This standard is intended to encourage vessel operators to maintain off-bottom trawl operations and limit further bycatch of halibut in the pollock fishery when halibut bycatch restrictions at §§ 672.20(f) and 675.21(c)(1) prohibit directed fishing for pollock by vessels using non-pelagic trawl gear.

A bycatch rate standard of 30 kg halibut/mt of groundfish is established for the BSAI ''other trawl'' fishery. This standard has remained unchanged since 1992. A bycatch rate standard of 40 kg halibut/mt of groundfish is established for the GOA ''other trawl'' fishery, which is unchanged since 1994. The considerations that support these bycatch rate standards for the ''other trawl'' fisheries are unchanged from previous years and are discussed in the Federal Register publications of 1995 bycatch rate standards (60 FR 2905, January 12, 1995, and 60 FR 27425, May 24, 1995).

Observer data collected from the 1995 GOA ''other trawl'' fishery show average third and fourth quarter halibut bycatch rates of 18 and 48 kg halibut/mt of groundfish, respectively. The first quarter rate from 1996 was lower, at 15 kg halibut/mt of groundfish. Observer data from the 1995 BSAI ''other trawl'' fishery show third and fourth quarter halibut bycatch rates of 10 and 21 kg halibut/mt of groundfish, respectively. The first quarter rate from the 1996 BSAI ''other trawl'' fishery was 10 kg halibut/mt of groundfish.

Bycatch Rate Standards for Red King Crab

The red king crab bycatch rate standard for the yellowfin sole and ''other trawl'' fisheries in Zone 1 of the Bering Sea subarea is 2.5 crab/mt of groundfish during the second half of 1996. This standard has remained unchanged since 1992.

The red king crab savings area (RKCSA) in Zone 1 has been closed to fishing with trawl gear since the beginning of the 1996 trawl season (60 FR 63451, December 11, 1995; 61 FR 8889, March 6, 1996). This closure will remain effective through June 15, 1996. The closure of the RKCSA has significantly reduced red king crab bycatch rates in the BSAI trawl fisheries during the first half of 1996. Through early May, the rock sole/flathead sole/other flatfish fishery category had taken only 9 percent of its annual red king crab bycatch allowance. The Pacific cod and yellowfin sole fisheries had taken only 25 percent and less than 1 percent, respectively, of their bycatch allowances. As a result, NMFS does not anticipate that the red king bycatch allowances specified for the 1996 trawl fisheries (61 FR 4311, February 5, 1996) will be reached. Furthermore, bycatch rates should remain low given that intensive flatfish or Pacific cod trawl fisheries in Zone 1 are not anticipated for the remainder of the year. Nonetheless, as in past years, the Regional Director is maintaining the 2.5 red king crab/mt of groundfish bycatch rate standard to support any exploratory fishing in Zone 1 by vessel operators attempting to avoid relatively high halibut and *C. bairdi* bycatch rates typically experienced in other areas of the BSAI.

The Regional Director has determined that the bycatch rate standards set out in Table 1 are appropriately based on the information and considerations necessary for such determinations under §§ 672.26(c) and 675.26(c). These bycatch rate standards may be revised and published in the Federal Register when deemed appropriate by the Regional Director, pending his consideration of the information set forth at §§ 672.26(c)(2)(v) and 675.26(c)(2)(v).

Classification

This action is taken under 50 CFR 672.26 and 675.26 and is exempt from review under E.O. 12866.

Authority: 16 U.S.C. 1801 *et seq.*

Dated: May 24, 1996.

Richard W. Surdi,

Acting Director, Office of Fisheries Conservation and Management, National Marine Fisheries Service.

[FR Doc. 96–13661 Filed 5–28–96; 4:25 pm]

BILLING CODE 3510–22–W

Proposed Rules

Federal Register
Vol. 61, No. 106
Friday, May 31, 1996

This section of the FEDERAL REGISTER contains notices to the public of the proposed issuance of rules and regulations. The purpose of these notices is to give interested persons an opportunity to participate in the rule making prior to the adoption of the final rules.

DEPARTMENT OF AGRICULTURE

Federal Crop Insurance Corporation

7 CFR Part 457

RIN 0563–AB55

Common Crop Insurance Regulations; Sugar Beet Crop Insurance Provisions

AGENCY: Federal Crop Insurance Corporation.

ACTION: Proposed rule.

SUMMARY: The Federal Crop Insurance Corporation (FCIC) proposes specific crop provisions for the insurance of sugar beets. The provisions will be used in conjunction with the Common Crop Insurance Policy Basic Provisions which contains standard terms and conditions common to most crops. The intended effect of this action is to provide policy changes to better meet the needs of the insured and include the current sugar beet endorsement with the Common Crop Insurance Policy for ease of use and consistency of policy terms.

DATES: Written comments, data, and opinions on this proposed rule will be accepted until close of business July 30, 1996 and will be considered when the rule is to be made final. The comment period for information collection under the Paperwork Reduction Act of 1995 continues through July 29, 1996.

ADDRESSES: Interested persons are invited to submit written comments to the Chief, Product Development Branch, Federal Crop Insurance Corporation, United States Department of Agriculture, 9435 Holmes Road, Kansas City, MO 64131. Written comments will be available for public inspection and copying in room 0324, South Building, USDA, 14th and Independence Avenue, S.W., Washington, D.C., 8:15 a.m.–4:45 p.m., EDT Monday through Friday.

FOR FURTHER INFORMATION CONTACT: Arden Routh, Program Analyst, Research and Development Division, Product Development Branch, FCIC, at 9435 Holmes Road, Kansas City, MO 64131, telephone (816) 926–6397.

SUPPLEMENTARY INFORMATION:

Executive Order 12866 and Departmental Regulation 1512–1

This action has been reviewed under United States Department of Agriculture (USDA) procedures established by Executive Order 12866 and Departmental Regulation 1512–1. This action constitutes a review as to the need, currency, clarity, and effectiveness of these regulations under those procedures. The sunset review date established for these regulations is February 1, 2000.

This rule has been determined to be exempt for the purposes of Executive Order 12866 and therefore has not been reviewed by the Office of Management and Budget (OMB).

Paperwork Reduction Act of 1995

The information collection requirements contained in these regulations were previously approved by OMB pursuant to the Paperwork Reduction Act of 1995 (44 U.S.C. chapter 35) under OMB control number 0563–0003 through September 30, 1998.

The amendments sent forth in this proposed rule do not contain additional information collections that require clearance by the OMB under the provisions of 44 U.S.C. chapter 35.

The title of this information collection is ''Catastrophic Risk Protection Plan and Related Requirements including, Common Crop Insurance Regulations; Sugar Beet Crop Insurance Provisions.'' The information to be collected includes: a crop insurance acreage report, an insurance application and a continuous contract. Information collected from the acreage report and application is electronically submitted to FCIC by the reinsured companies. Potential respondents to this information collection are producers of sugar beets that are eligible for Federal crop insurance.

The information requested is necessary for the insurance company and FCIC to provide insurance, provide reinsurance, determine eligibility, determine and collect premiums or other monetary amounts, and pay benefits.

All information is reported annually. The reporting burden for this collection of information is estimated to average 16.9 minutes per response for each of the 3.6 responses from approximately 1,755,015 respondents. The total annual burden on the public for this information collection is 2,676,932 hours.

The comment period for information collections under the Paperwork Reduction Act of 1995 continues through July 29, 1996 for the following: (a) whether the proposed collection of information is necessary for the proper performance of the functions of the agency, including whether the information shall have practical utility; (b) the accuracy of the agency's estimate of the burden of the proposed collection of information; (c) ways to enhance the quality, utility, and clarity of the information to be collected; and (d) ways to minimize the burden of the collection of information on respondents, including through the use of automated collection techniques or other forms of information gathering technology.

Comments should be submitted to the Desk Officer for Agriculture, Office of Information and Regulatory Affairs, Office of Management and Budget, Washington, D.C. 20503 and to Bonnie Hart, Advisory and Corporate Operations Staff, Regulatory Review Group, Farm Service Agency, P.O. Box 2415, Ag Box 0570, U.S. Department of Agriculture, Washington, D.C. 20013–2415. Telephone (202) 690–2857. Copies of the information collection may be obtained from Bonnie Hart at the above address.

Unfunded Mandates Reform Act of 1995

Title II of the Unfunded Mandate Reform Act of 1995 (UMRA), Pub. L. 104–4, establishes requirements for Federal agencies to assess the effects of their regulatory actions on State, local, and tribal governments and the private sector. Under section 202 of the UMRA, FCIC generally must prepare a written statement, including a cost-benefit analysis, for proposed and final rules with Federal mandates that may result in expenditures to State, local, or tribal governments, in the aggregate, or to the private sector, of $100 million or more in any 1 year. When such a statement is needed for a rule, section 205 of the UMRA generally requires FCIC to identify and consider a reasonable number of regulatory alternatives and adopt the least costly, more cost-effective or least burdensome alternative that achieves the objectives of the rule.

This rule contains no Federal mandates (under the regulatory provisions of title II of the UMRA) for State, local, and tribal governments or the private sector. Thus, this rule is not subject to the requirements of sections 202 and 205 of the UMRA.

Executive Order 12612

It has been determined under section 6(a) of Executive Order 12612, Federalism, that this rule does not have sufficient federalism implication to warrant the preparation of a Federalism Assessment. The provisions contained in this rule will not have a substantial direct effect on States or their political subdivisions, or on the distribution of power and responsibilities among various levels of government.

Regulatory Flexibility Act

This regulation will not have a significant impact on a substantial number of small entities. The amount of work required of the insurance companies delivering these policies and the procedures therein will not increase significantly from the amount of work currently required to deliver previous policies to which this regulation applies. This rule does not have any greater or lesser impact on the producer. Therefore, this action is determined to be exempt from the provisions of the Regulatory Flexibility Act (5 U.S.C. § 605), and no Regulatory Flexibility Analysis was prepared.

Federal Assistance Program

This program is listed in the Catalog of Federal Domestic Assistance under No. 10.450.

Executive Order 12372

This program is not subject to the provisions of Executive Order 12372, which require intergovernmental consultation with State and local officials. See the Notice related to 7 CFR part 3015, subpart V, published at 48 FR 29115, June 24, 1983.

Executive Order 12778

The Office of the General Counsel has determined that these regulations meet the applicable standards provided in sections 2(a) and 2(b)(2) of Executive Order 12778. The provisions of this rule will not have retroactive effect prior to the effective date. The provisions of this rule will preempt State and local laws to the extent such State and local laws are inconsistent herewith. The administrative appeal provisions in 7 CFR parts 11 and 780 must be exhausted before action for judicial review may be brought.

Environmental Evaluation

This action is not expected to have a significant impact on the quality of the human environment, health, and safety. Therefore, neither an Environmental Assessment nor an Environmental Impact Statement is needed.

National Performance Review

This regulatory action is being taken as part of the National Performance Review Initiative to eliminate unnecessary or duplicative regulations and improve those that remain in force.

Background

FCIC proposes to add to the Common Crop Insurance Regulations (7 CFR part 457), a new section, 7 CFR § 457.109, Sugar Beet Crop Insurance Provisions. The provisions will be effective for the 1998 and succeeding crop years. The proposed Sugar Beet Crop Insurance Provisions will replace the provisions found at 7 CFR part 430 (Sugar Beet Crop Insurance Regulations). Upon publication of 7 CFR § 457.109 as a final rule, the provisions for insuring sugar beets contained herein will supersede the current provisions contained in 7 CFR part 430. By separate rule, FCIC will revise part 430 to restrict its effect through the 1997 crop year and later remove that part.

This rule makes minor editorial and format changes to improve the Sugar Beet Crop Insurance Regulations' compatibility with the Common Crop Insurance Policy. In addition, FCIC is proposing substantive changes in the provisions for insuring sugar beets as follows:

1. Amend the definition of ''county,'' to that contained in the Basic Provisions of (§ 457.8). The current definition includes land identified by an FSA farm serial number for the county that is physically located in another county where as the new definition does not. This change is made require such land to be insured using the actuarial materials for the county where the land is located.

2. Section 1—Add definitions for the terms *Days, FSA, Final planting date, Good farming practices, Initially planted, Interplanted, Irrigated practice, Late planted, Late planting period, Local market price, Planted acreage, Practical to replant, Prevented planting, Processor, Production guarantee (per acre), Replanting, Standardized ton, Sugar beet processor contract, Thinning, Timely planted, Ton,* and, *Written agreement,* for clarification purposes.

3. Section 2—Unit division provisions are expanded to include insured's reporting responsibilities to qualify for optional units and the breakdown of units by irrigated and non-irrigated acreage. The definition of ''unit'' under section 1(tt) of the Basic Provisions (part 457.8) provides for the division of units in accordance with applicable crop provisions. The current Sugar Beet Crop Insurance Regulations, however, do not provide guidelines for determining optional units. Section 2 will provide guidelines for optional unit division of sugar beet basic units that are consistent with other annual crop provisions. Optional units may be divided on the basis of section, section equivalent, or Farm Service Agency (FSA) Farm Serial Number, or on acreage including both irrigated and non-irrigated practices, or both. Consistent with the definition of ''unit'' in the Basic Provisions (§ 457.8), section 12 of the Sugar Beet Crop Provisions will provide that in settling a claim, loss will be determined on a unit basis and all optional units for which acceptable production records were not provided will be combined.

4. Section 3(a)—Provision added to clarify that only 1 price election is available for all sugar beets insured in the county.

5. Section 4—The contract change date is moved 30 days earlier in most counties to maintain at least a 3 month period between this date and earliest cancellation date (see item 6 below).

6. Section 5—The cancellation and termination dates have been changed from April 15 to March 15 in all states except California and Arizona. The cancellation and termination dates for the state of Arizona and Imperial County, California remain unchanged at August 31. The cancellation and termination dates have been changed from March 31 to February 28 for Lassen, Modoc, Shasta and Siskiyou, counties California. The cancellation date has been changed from March 31 to July 15 for all remaining California counties. The termination date for these California counties has been changed to November 30 immediately following the last final planting date for the crop year. The changes (except California counties with a July 15 cancellation date) are intended to minimize program vulnerabilities that may exist under current program dates by reducing the chances that insureds may be able to anticipate below normal yields. The change to July 15 in the California counties specified above is made to allow FCIC to return to the use of a single final planting date in counties where sugar beets are planted year round. Constant changes in these counties made establishment of multiple final planting dates extremely difficult to administer.

7. Section 6(b)—Specify insurance eligibility requirements for sugar beet producers who are also the processing company. These provisions are needed to ensure that the same terms contained in a traditional sugar beet processor contract are in place.

8. Section 7(a)(2)—Stipulate that acreage is uninsurable in any crop year following the discovery of rhizomania on the unit unless we agree in writing to insure such acreage. Rhizomania remains in the soil for several years and normally creates an unacceptable insurance risk.

9. Section 7(a)(3)—Stipulate that acreage is uninsurable if it does not meet rotation requirements shown in the Special Provisions. This change identifies the location of these requirements.

10. Section 7(b)—Clarify that any acreage damaged prior to the final planting date must be replanted unless replanting is not practical. This provision applies to all counties with an established final planting date (see item 11 for information regarding counties that do not have a final planting date).

11. Section 7(c)—Stipulate that any acreage damaged within 30 days of the initial planting must be replanted unless replanting is not practical. This provision applies to all counties that do not have an established final planting date.

12. Section 8(b)—Change the end of insurance period to the last day of the 12th month after the crop initially was planted in all California counties except Imperial, Lassen, Modoc, Shasta and Siskiyou. This change is made to accommodate planting that occurs virtually all year in these counties.

13. Section 8(c)—Change the calendar date for the end of the insurance period to October 31 for Lassen, Modoc, Shasta and Siskiyou Counties, California and Klamath County, Oregon.

14. Section 8(e)—The end of insurance period for New Mexico has been changed from November 15 to December 31. This change is being proposed because the sugar beet program in New Mexico at this time consists of 1 county that has similar planting and harvesting dates as the adjacent sugar beet counties in Texas. The end of the insurance period in these Texas counties is December 31.

15. Section 9—Provisions are added to clarify that insufficient or improper application of pest or disease control measures is not an insured cause of loss.

16. Section 10(b)—The maximum amount of the replanting payment has changed from one ton multiplied by the price election multiplied by the share to the lesser of 10 percent (10%) of the final stage production guarantee or one ton, multiplied by the price election multiplied by the share. The 10 percent (10%) factor has been added to prevent insureds who elect a lower coverage level from receiving a replant payment that exceeds the original liability.

17. Section 10(c)—Reduce the liability for a unit by the amount of any replanting payment when sugar beets are replanted using a practice that was originally uninsurable. The current sugar beet provisions are silent regarding this issue. For example, if the Actuarial Table requires a specific row width and the crop is replanted to a lesser row width, the dollar amount of coverage would be reduced by the amount of any replant payment. This addition is consistent with the manner in which other crops are treated.

18. Section 11(b)—Stipulate that a copy of the sugar beet processor contract or corporate resolution must be provided in the event of a loss.

19. Section 13—Grant protection for acreage planted within 25 days after the final planting date, and for acreage that cannot be planted due to any insurable cause of loss. If the insured is prevented from planting by the final planting date, or intends to plant within the late planting period and is prevented from doing so, insurance protection is provided at a specified percent of the production guarantee for timely planted acreage. Reductions are made to recognize increasingly lower yield potential as planting is delayed. Late and prevented planting coverages are not available in any California counties except Imperial, Lassen, Modoc, Shasta and Siskiyou. Year round planting in these counties precludes the use of current prevented planting provisions.

20. Section 14—Add provisions for providing insurance coverage by written agreement. FCIC has a long-standing policy of permitting modification of insurance contracts by written agreement. This provision is not documented in the current Sugar Beet Crop Insurance Regulations. Section 14 will discuss application for, and duration of, written agreements.

List of Subjects in 7 CFR Part 457

Crop insurance, sugar beet.

Proposed Rule

Pursuant to the authority contained in the Federal Crop Insurance Act, as amended (7 U.S.C. § 1501 *et seq.*), the Federal Crop Insurance Corporation hereby proposes to amend the Common Crop Insurance Regulations, (7 CFR part 457), effective for the 1998 and succeeding crop years, to read as follows:

PART 457—[AMENDED]

1. The authority citation for 7 CFR part 457 continues to read as follows:

Authority: 7 U.S.C. 1506(1), and 1506(p).

2. 7 CFR part 457 is amended by adding a new § 457.109 to read as follows:

§ 457.109 Sugar beet crop insurance provisions.

The Sugar Beet Crop Insurance Provisions for the 1998 and succeeding crop years are as follows:

UNITED STATES DEPARTMENT OF AGRICULTURE

Federal Crop Insurance Corporation

Sugar Beet Crop Provisions

If a conflict exists among the Basic Provisions (§ 457.8), these crop provisions, and the Special Provisions, the Special Provisions will control these crop provisions and the Basic Provisions; and these crop provisions will control the Basic Provisions.

1. Definitions

Crop year—In Imperial, Lassen, Modoc, Shasta and Siskiyou, counties California and all other states, the period within which the sugar beets are normally grown, which is designated by the calendar year in which the sugar beets are normally harvested. In all California counties, except Imperial, Lassen, Modoc, Shasta and Siskiyou counties, the period from planting until the applicable date for the end of the insurance period and is designated by:

(a) The calendar year in which planted if planted on or before July 15; or

(b) The following calendar year if planted after July 15.

Days—Calendar days.

FSA—Farm Service Agency of the United States Department of Agriculture or any successor agency.

Final planting date—The date contained in the Special Provisions for the insured crop by which the crop must initially be planted in order to be insured for the full production guarantee.

Good farming practices—The cultural practices generally in use in the county for the crop to make normal progress toward maturity and produce at least the yield used to determine the production guarantee and are those generally recognized by the Cooperative Extension Service as compatible with agronomic and weather conditions in the county.

Harvest—Topping, lifting and removing sugar beets from the field.

Initially planted—The first occurrence that land is considered as planted acreage for the crop year.

Interplanted—Acreage on which two or more crops are planted in a manner that does not permit separate agronomic maintenance or harvest of the insured crop.

Irrigated practice—A method of producing a crop by which water is artificially applied during the growing season by appropriate systems and at the proper times, with the intention of providing the quantity of water

needed to produce at least the yield used to establish the irrigated production guarantee on the irrigated acreage planted to the insured crop.

Late planted—Acreage planted to the insured crop during the late planting period.

Late planting period—The period that begins the day after the final planting date for the insured crop and ends twenty-five (25) days after the final planting date.

Local market price—The price per pound for raw sugar offered by buyers in the area in which you normally market the sugar beets.

Planted acreage—Land in which seed has been placed by a machine appropriate for the insured crop and planting method, at the correct depth, into a seedbed that has been properly prepared for the planting method and production practice. Sugar beets must initially be planted in rows to be considered planted. Acreage planted in any other manner will not be insurable unless otherwise provided by the Special Provisions or by written agreement.

Practical to replant—In lieu of the definition of ''Practical to replant'' contained in section 1 of the Basic Provisions (§ 457.8), practical to replant is defined as our determination, after loss or damage to the insured crop, based on factors, including but not limited to moisture availability, condition of the field, and time to crop maturity, that replanting to the insured crop will allow the crop to attain maturity prior to the calendar date for the end of the insurance period. It will not be considered practical to replant after the end of the late planting period in counties where a late planting period is applicable, or 30 days after initial planting for all counties where a late planting period is not applicable, unless replanting is generally occurring in the area.

Prevented planting—Inability to plant the insured crop with proper equipment by the final planting date designated in the Special Provisions for the insured crop in the county or the end of the late planting period. You must have been unable to plant the insured crop due to an insured cause of loss that has prevented the majority of producers in the surrounding area from planting the same crop.

Processor—A corporation that possesses all licenses and permits for marketing sugar required by the state in which it is domiciled or operates, and that possesses facilities, or has contractual access to such facilities, with enough equipment to accept and process the sugar beets within a reasonable amount of time after harvest.

Production guarantee (per acre):

(a) First stage production guarantee—The final stage production guarantee multiplied by 60 percent.

(b) Final stage production guarantee—The number of tons determined by multiplying the approved yield per acre by the coverage level percentage you elect.

Replanting—Performing the cultural practices necessary to replace the sugar beet seed and then replacing the sugar beet seed in the insured acreage with the expectation of growing a successful crop.

Standardized ton—A ton of sugar beets expressed on a basis of a stated percentage of raw sugar content.

Sugar beet processor contract—A written contract between the grower and the processor, containing at a minimum:

(1) The grower's commitment to plant and grow sugar beets, and to deliver the sugar beet production to the processor;

(2) The processor's commitment to purchase the production stated in the contract; and

(3) A price or formula for a price based on third party data, that will be paid to the grower for the production stated in the contract.

Thinning—The process of removing, either by machine or hand, a portion of the sugar beet plants to attain a desired plant population.

Timely planted—Planted on or before the final planting date designated in the Special Provisions for the insured crop in the county.

Ton—Two thousand (2,000) pounds avoirdupois.

Written agreement—A written document that alters designated terms of a policy in accordance with section 14.

2. Unit Division

Unless limited by the Special Provisions, a unit as defined in section 1 (Definitions) of the Basic Provisions (§ 457.8), (''basic unit'') may be divided into optional units if, for each optional unit you meet all the conditions of this section or if a written agreement to such division exists. Basic units may not be divided into optional units on any basis including, but not limited to, production practice, type, variety, and planting period other than as described in this section. If you do not comply fully with these provisions, we will combine all optional units that are not in compliance with these provisions into the basic unit from which they were formed. We will combine the optional units at any time we discover that you have failed to comply with these provisions. If failure to comply with these provisions is determined to be inadvertent, and the optional units are combined, that portion of the premium paid for the purpose of electing optional units will be refunded to you pro rata for the units combined. All optional units must be identified on the acreage report for each crop year.

(a) The following requirements must be met for each optional unit:

(1) You must have records, which can be independently verified, of planted acreage and production for each optional unit for at least the last crop year used to determine your production guarantee;

(2) You must plant the crop in a manner that results in a clear and discernable break in the planting pattern at the boundaries of each optional unit; and

(3) You must have records of marketed production or measurement of stored production from each optional unit maintained in such a manner that permits us to verify the production from each optional unit, or the production from each unit must be kept separate until loss adjustment is completed by us.

(b) Each optional unit must meet one or more of the following criteria, as applicable:

(1) *Optional Units by Section, Section Equivalent, or FSA Farm Serial Number:* Optional units may be established if each optional unit is located in a separate legally identified Section. In the absence of Sections, we may consider parcels of land legally identified by other methods of measure including, but not limited to Spanish grants, railroad surveys, leagues, labors, or Virginia Military Lands, as the equivalent of Sections for unit purposes. In areas that have not been surveyed using the systems identified above, or another system approved by us, or in areas where such systems exist but boundaries are not readily discernable, each optional unit must be located in a separate farm identified by a single FSA Farm Serial Number.

(2) *Optional Units on Acreage Including Both Irrigated and Non-Irrigated Practices:* In addition to, or instead of, establishing optional units by Section, section equivalent, or FSA Farm Serial Number, optional units may be based on irrigated acreage or non-irrigated acreage if both are located in the same Section, section equivalent, or FSA Farm Serial Number. To qualify as separate irrigated and non-irrigated optional units, the non-irrigated acreage may not continue into the irrigated acreage in the same rows or planting pattern. The irrigated acreage may not extend beyond the point at which the irrigation system can deliver the quantity of water needed to produce the yield on which the guarantee is based. However, the corners of a field in which a center-pivot irrigation system is used will be considered as irrigated acreage if separate acceptable records of production from the corners are not provided. If the corners of a field in which a center-pivot irrigation system is used do not qualify as a separate non-irrigated optional unit, they will be a part of the unit containing the irrigated acreage. However, non-irrigated acreage that is not a part of a field in which a center-pivot irrigation system is used may qualify as a separate optional unit provided that all requirements of this section are met.

3. Insurance Guarantees, Coverage Levels, and Prices for Determining Indemnities

(a) In addition to the requirements of section 3 (Insurance Guarantees, Coverage Levels, and Prices for Determining Indemnities) of the Basic Provisions (§ 457.8), you may select only one price election for all the sugar beets in the county insured under this policy.

(b) The production guarantees are progressive by stages, and increase at specified intervals to the final stage. The stages are:

(1) First stage, with a guarantee of 60 percent (60%), extends from planting until:

(i) July 1 in Lassen, Modoc, Shasta and Siskiyou counties of California and all other states; and

(ii) The earlier of thinning or 90 days after planting in all California counties except Lassen, Modoc, Shasta and Siskiyou.

(2) Final stage, with a guarantee equal to 100 percent (100%) of the production guarantee, applies to all insured sugar beets that complete the first stage.

(c) The production guarantee will be expressed in standardized tons.

(d) Any acreage of sugar beets damaged in the first stage to the extent that growers in the area would not normally further care for the sugar beets will be deemed to have been

destroyed, even though you may continue to care for it. The production guarantee for such acreage will not exceed the first stage production guarantee.

4. Contract Changes

The contract change date is April 30 preceding the cancellation date for counties with a July 15 or August 31 cancellation date and November 30 preceding the cancellation date for all other counties (see the provisions of section 4 (Contract Changes) of the Basic Provisions (§ 457.8)).

5. Cancellation and Termination Dates

In accordance with section 2 (Life of Policy, Cancellation, and Termination) of the Basic Provisions (§ 457.8), the cancellation and termination dates are:

State and county	Cancellation date	Termination date
Arizona; and Imperial County, California	August 31	August 31.
All California counties, except Imperial, Lassen, Modoc, Shasta and Siskiyou	July 15	November 30.
All Other States, and Lassen, Modoc, Shasta and Siskiyou Counties, California	February 28	February 28.

6. Insured Crop

(a) In accordance with section 8 (Insured Crop) of the Basic Provisions (§ 457.8), the crop insured will be all the sugar beets in the county for which a premium rate is provided by the actuarial table:

(1) In which you have a share;

(2) That are planted for harvest as sugar beets;

(3) That are grown under a sugar beet processor contract executed with a processor before the acreage reporting date; and

(4) That are not (unless allowed by the Special Provisions or by written agreement):

(i) Interplanted with another crop;

(ii) Planted into an established grass or legume; or

(iii) Planted prior to submitting a properly completed application.

(b) Sugar beet growers who are also the processor may be able to establish an insurable interest if they meet the following requirements:

(1) The processor must be a corporation and have a valid insurable interest in the crop;

(2) The Board of Directors of the processor must have approved a corporate resolution that sets forth essentially the same terms that a traditional sugar beet processor contract would contain. Such corporate resolution will be considered a sugar beet processing contract under the terms of the sugar beet crop insurance policy;

(3) Sales records of sugar beet production for the previous year must be supplied to us to confirm the processor has produced and sold sugar in the past; and

(4) Our inspection of the processing facilities determines that they conform to the definition of processor contained in section 1 of these crop provisions.

7. Insurable Acreage

In addition to the provisions of section 9 (Insurable Acreage) of the Basic Provisions (§ 457.8):

(a) We will not insure any acreage planted to sugar beets:

(1) The preceding crop year;

(2) In any crop year following the discovery of rhizomania on the acreage unless a written agreement allows otherwise; or

(3) That does not meet the rotation requirements shown in the Special Provisions;

(b) Any acreage of the insured crop damaged before the final planting date, to the extent that growers in the area would normally not further care for the crop, must be replanted unless we agree that replanting is not practical. This paragraph does not apply to California counties except Imperial, Lassen, Modoc, Shasta and Siskiyou; and

(c) Any acreage of the insured crop in California counties other than Imperial, Lassen, Modoc, Shasta and Siskiyou that is damaged within 30 days of initial planting to the extent growers in the area would normally not further care for the crop, must be replanted unless we agree replanting is not practical.

8. Insurance Period

In accordance with the provisions of section 11 (Insurance Period) of the Basic Provisions (§ 457.8), the calendar date for the end of the insurance period is:

(a) July 15 in Arizona and in Imperial County, California;

(b) The last day of the 12th month after the insured crop was initially planted in all California counties except Imperial, Lassen, Modoc, Shasta and Siskiyou;

(c) October 31 in Lassen, Modoc, Shasta and Siskiyou Counties, California, and in Klamath County, Oregon;

(d) November 25 in Ohio;

(e) December 31 in New Mexico and Texas; and

(f) November 15 in all other states.

9. Causes of Loss

In accordance with the provisions of section 12 (Causes of Loss) of the Basic Provisions (§ 457.8), insurance is provided only against the following causes of loss that occur within the insurance period:

(a) Adverse weather conditions;

(b) Fire;

(c) Insects, but not damage due to insufficient or improper application of pest control measures;

(d) Plant disease, but not damage due to insufficient or improper application of disease control measures;

(e) Wildlife;

(f) Earthquake;

(g) Volcanic eruption; or

(h) Failure of the irrigation water supply, if caused by an insured peril that occurs during the insurance period.

10. Replanting Payments

(a) In accordance with section 13 (Replanting Payment) of the Basic Provisions (§ 457.8), a replanting payment is allowed if the crop is damaged by an insurable cause of loss to the extent that the remaining stand will not produce at least 90 percent (90%) of the final stage production guarantee for the acreage and it is practical to replant.

(b) The maximum amount of the replanting payment per acre will be the lesser of 10 percent (10%) of the production guarantee or 1 ton, multiplied by your price election, multiplied by your insured share.

(c) When sugar beets are replanted using a practice that is uninsurable as an original planting, our liability on the unit will be reduced by the amount of the replanting payment. The premium amount will not be reduced.

11. Duties In The Event of Damage or Loss

In accordance with the requirements of section 14 (Duties in the Event of Damage or Loss) of the Basic Provisions (§ 457.8):

(a) Representative samples of the unharvested crop must be at least 10 feet wide and extend the entire length of each field in the unit. The samples must not be harvested or destroyed until the earlier of our inspection or 15 days after harvest of the balance of the unit is completed; and

(b) You must provide a copy of your sugar beet processor contract, or corporate resolution if you are the processor.

12. Settlement of Claim

(a) We will determine your loss on a unit basis. In the event you are unable to provide production records:

(1) For any optional unit, we will combine all optional units for which acceptable production records were not provided; or

(2) For any basic unit, we will allocate any commingled production to such units in proportion to our liability on the harvested acreage for each unit.

(b) In the event of loss or damage covered by this policy, we will settle your claim on any unit by:

(1) Multiplying the insured acreage by the production guarantee;

(2) Subtracting from this the total production to count;

(3) Multiplying the remainder by your price election; and

(4) Multiplying this result by your share.

(c) The total production to count (in standardized tons) from all insurable acreage on the unit will include:

(1) All appraised production as follows:

(i) Not less than the production guarantee for acreage:

(A) That is abandoned;

(B) Put to another use without our consent;

(C) Damaged solely by uninsured causes; or

(D) For which you fail to provide production records that are acceptable to us;

(ii) Production lost due to uninsured causes;

(iii) Unharvested production (unharvested production will not be adjusted for quality);

(iv) Only appraised production in excess of the difference between the first and final stage production guarantee for acreage that does not qualify for the final stage guarantee will be counted, provided that all production from acreage subject to section 12(c)(1)(i) and (ii) will be counted; and

(v) Potential production on insured acreage that you intend to put to another use or abandon, if you and we agree on the appraised amount of production. Upon such agreement, the insurance period for that acreage will end if you put the acreage to another use or abandon the crop. If agreement on the appraised amount of production is not reached:

(A) If you do not elect to continue to care for the crop, we may give you consent to put the acreage to another use if you agree to leave intact, and provide sufficient care for, representative samples of the crop in locations acceptable to us, (The amount of production to count for such acreage will be based on the harvested production or appraisals from the samples at the time harvest should have occurred. If you do not leave the required samples intact, or you fail to provide sufficient care for the samples, our appraisal made prior to giving you consent to put the acreage to another use will be used to determine the amount of production to count); or

(B) If you elect to continue to care for the crop, the amount of production to count for the acreage will be the harvested production, or our reappraisal if additional damage occurs and the crop is not harvested; and

(2) All harvested production from the insurable acreage.

(d) Production that meets the minimum acceptable standards contained in the sugar beet processor contract or corporate resolution will be converted to standardized tons by:

(1) Dividing the average percentage of sugar in such sugar beets by the sugar content percentage shown in the Special Provisions; and

(2) Multiplying the result (rounded to three places) by the number of tons of such sugar beets.

The average percentage of sugar will be determined by the processor from tests performed on each load at the time of delivery. If individual tests of sugar content are not made at the time of delivery, the average percent of sugar shall equal the sugar content percent shown in the Special Provisions.

(e) Production that does not meet the minimum acceptable standards contained in the sugar beet processor contract or corporate resolution will be converted to standardized tons by:

(1) Dividing the gross dollar value of all of the damaged sugar beets on the unit (including the value of cooperative stock, patronage refunds, etc.) by the local market price per pound on the earlier of the date such production is sold or the date of final inspection for the unit;

(2) Dividing that result by 2,000; and

(3) Dividing that result by the county average sugar percentage factor contained in the Special Provisions for this purpose.

For example, assume that the total dollar value of the damaged sugar beets is $6,000.00; the local market price is $0.10; and the county average sugar percentage factor is 0.15. The amount of production to count would be calculated as follows: (($6,000.00÷$0.10)÷2,000)÷0.15 = 200 tons.

13. Late and Prevented Planting.

(a) In lieu of provisions contained in the Basic Provisions (§ 457.8) regarding acreage initially planted after the final planting date and the applicability of a Late Planting Agreement Option, insurance will be provided for acreage planted to the insured crop during the late planting period (see section 13(c)), and acreage you were prevented from planting (see section 13(d)). These coverages provide reduced production guarantees and are applicable in all counties except California counties with a July 15 cancellation date. The premium amount for late planted acreage and eligible prevented planting acreage will be the same as that for timely planted acreage. If the amount of premium you are required to pay (gross premium less our subsidy) for late planted acreage or prevented planting acreage exceeds the liability on such acreage: coverage for those acres will not be provided; no premium will be due; and no indemnity will be paid for such acreage.

(b) You must provide written notice to us not later than the acreage reporting date if you were prevented from planting.

(c) Late Planting

(1) For sugar beet acreage planted during the late planting period, the production guarantee for each acre will be reduced for each day planted after the final planting date by:

(i) One percent (1%) for the 1st through the 10th day; and

(ii) Two percent (2%) for the 11th through the 25th day.

(2) In addition to the requirements of section 6 (Report of Acreage) of the Basic Provisions (§ 457.8), you must report the dates the acreage is planted within the late planting period.

(3) If planting of sugar beets continues after the final planting date, or you are prevented from planting during the late planting period, the acreage reporting date will be the later of:

(i) The acreage reporting date contained in the Special Provisions for the insured crop; or

(ii) Five (5) days after the end of the late planting period.

(d) Prevented Planting (Including Planting After the Late Planting Period)

(1) If you were prevented from timely planting sugar beets, you may elect:

(i) To plant sugar beets during the late planting period. The production guarantee for such acreage will be determined in accordance with section 13(c)(1);

(ii) Not to plant this acreage to any crop except a cover crop not for harvest. You may also elect to plant the insured crop after the late planting period. In either case, the production guarantee for such acreage will be 35 percent (35%) of the production guarantee for timely planted acres. For example, if your production guarantee for timely planted acreage is 20.0 tons per acre, your prevented planting production guarantee would be 7.0 tons per acre (20.0 tons multiplied by 0.35). If you elect to plant the insured crop after the late planting period, production to count for such acreage will be determined in accordance with section 12; or

(iii) Not to plant the intended crop but plant a substitute crop for harvest, in which case:

(A) No prevented planting production guarantee will be provided for such acreage if the substitute crop is planted on or before the 10th day following the final planting date for the insured crop; or

(B) A production guarantee equal to 17.5 percent (17.5%) of the production guarantee for timely planted acres will be provided for such acreage, if the substitute crop is planted after the 10th day following the final planting date for the insured crop. If you elected the Catastrophic Risk Protection Endorsement or excluded this coverage, and plant a substitute crop, no prevented planting coverage will be provided. For example, if your production guarantee for timely planted acreage is 20.0 tons per acre, your prevented planting production guarantee would be 3.5 tons per acre (20.0 ton multiplied by 0.175). You may elect to exclude prevented planting coverage when a substitute crop is planted for harvest and receive a reduction in the applicable premium rate. If you wish to exclude this coverage, you must so indicate, on or before the sales closing date, on your application or on a form approved by us. Your election to exclude this coverage will remain in effect from year to year unless you notify us in writing on our form by the applicable sales closing date for the crop year for which you wish to include this coverage. All acreage of the crop insured under this policy will be subject to this exclusion.

(2) Production guarantees for timely, late, and prevented planting acreage within a unit will be combined to determine the production guarantee for the unit. For example, assume you insure 1 unit in which you have a 100 percent (100%) share. The unit consists of 150 acres, of which 50 acres were planted timely, 50 acres were planted 7 days after the final planting date (late planted), and 50 acres were not planted but are eligible for a prevented planting production guarantee. The production guarantee for the unit will be computed as follows:

(i) For the timely planted acreage, multiply the per acre production guarantee for timely planted acreage by the 50 acres planted timely;

(ii) For the late planted acreage, multiply the per acre production guarantee for timely planted acreage by 93 percent (93%) and multiply the result by the 50 acres planted late; and

(iii) For prevented planting acreage, multiply the per acre production guarantee for timely planted acreage by:

(A) Thirty-five percent (35%) and multiply the result by the 50 acres you were prevented from planting, if the acreage is eligible for

prevented planting coverage, and if the acreage is left idle for the crop year, or if a cover crop is planted not for harvest. Prevented planting compensation hereunder will not be denied because the cover crop is hayed or grazed; or

(B) Seventeen and five tenths percent (17.5%) and multiply the result by the 50 acres you were prevented from planting, if the acreage is eligible for prevented planting coverage, and if you elect to plant a substitute crop for harvest after the 10th day following the final planting date for the insured crop. (This subparagraph (B) is not applicable, and prevented planting coverage is not available hereunder, if you elected the Catastrophic Risk Protection Endorsement or you elected to exclude prevented planting coverage when a substitute crop is planted (see section 13(d)(1)(iii)).)

Your premium will be based on the result of multiplying the per acre production guarantee for timely planted acreage by the 150 acres in the unit.

(3) Proof may be required that you had the inputs available to plant and produce the intended crop with the expectation of at least producing the production guarantee.

(4) In addition to the provisions of section 11 (Insurance Period) of the Basic Provisions (§ 457.8), the insurance period for prevented planting coverage begins:

(i) On the sales closing date contained in the Special Provisions for the insured crop in the county for the crop year the application for insurance is accepted; or

(ii) For any subsequent crop year, on the sales closing date for the insured crop in the county for the previous crop year, provided continuous coverage has been in effect since that date. For example: If you make application and purchase insurance for sugar beets for the 1998 crop year, prevented planting coverage will begin on the 1998 sales closing date for sugar beets in the county. If the sugar beet coverage remains in effect for the 1999 crop year (is not terminated or canceled during or after the 1998 crop year, except the policy may have been canceled to transfer the policy to a different insurance provider, if there is no lapse in coverage), prevented planting coverage for the 1999 crop year began on the 1998 sales closing date.

(5) The acreage to which prevented planting coverage applies will not exceed the total eligible acreage on all FSA Farm Serial Numbers in which you have a share, adjusted for any reconstitution that may have occurred on or before the sales closing date. Eligible acreage for each FSA Farm Serial Number is determined as follows:

(i) If you participate in any program administered by the United States Department of Agriculture that limits the number of acres that may be planted for the crop year, the acreage eligible for prevented planting coverage will not exceed the total acreage permitted to be planted to the insured crop.

(ii) If you do not participate in any program administered by the United States Department of Agriculture that limits the number of acres that may be planted, and unless we agree in writing on or before the sales closing date, eligible acreage will not exceed the greater of:

(A) The FSA base acreage for the insured crop, including acres that could be flexed from another crop, if applicable;

(B) The number of acres planted to sugar beets on the FSA Farm Serial Number during the previous crop year; or

(C) One-hundred percent (100%) of the simple average of the number of acres planted to sugar beets during the crop years that you certified to determine your yield.

(iii) Acreage intended to be planted under an irrigated practice will be limited to the number of acres for which you had adequate irrigation facilities prior to the insured cause of loss which prevented you from planting.

(iv) A prevented planting production guarantee will not be provided for any acreage:

(A) That does not constitute at least 20 acres or 20 percent (20%) of the acreage in the unit, whichever is less (Acreage that is less than 20 acres or 20 percent (20%) of the acreage in the unit will be presumed to have been intended to be planted to the insured crop planted in the unit, unless you can show that you had the inputs available before the final planting date to plant and produce another insured crop on the acreage);

(B) For which the actuarial table does not designate a premium rate unless a written agreement designates such premium rate;

(C) Used for conservation purposes or intended to be left unplanted under any program administered by the United States Department of Agriculture;

(D) On which another crop is prevented from being planted, if you have already received a prevented planting indemnity, guarantee or amount of insurance for the same acreage in the same crop year, unless you provide adequate records of acreage and production showing that the acreage has a history of double-cropping in each of the last 4 years;

(E) On which the insured crop is prevented from being planted, if any other crop is planted and fails, or is planted and harvested, hayed or grazed on the same acreage in the same crop year, (other than a cover crop as specified in paragraph (d)(2)(iii)(A) of this section, or a substitute crop allowed in paragraph (d)(2)(iii)(B) of this section), unless you provide adequate records of acreage and production showing that the acreage has a history of double-cropping in each of the last 4 years;

(F) When coverage is provided under the Catastrophic Risk Protection Endorsement if you plant another crop for harvest on any acreage you were prevented from planting in the same crop year, even if you have a history of double-cropping. If you have a Catastrophic Risk Protection Endorsement and receive a prevented planting indemnity, guarantee, or amount of insurance for a crop and are prevented from planting another crop on the same acreage, you may only receive the prevented planting indemnity, guarantee, or amount of insurance for the crop on which the prevented planting indemnity, guarantee, or amount of insurance is received; or

(G) For which planting history or conservation plans indicate that the acreage would have remained fallow for crop rotation purposes.

(v) For the purpose of determining eligible acreage for prevented planting coverage, acreage for all units will be combined and be reduced by the number of sugar beet acres timely planted and late planted. For example, assume you have 100 acres eligible for prevented planting coverage in which you have a 100 percent (100%) share. The acreage is located in a single FSA Farm Serial Number which you insure as two separate optional units consisting of 50 acres each. If you planted 60 acres of sugar beets on one optional unit and 40 acres of sugar beets on the second optional unit, your prevented planting eligible acreage would be reduced to zero (*i.e.*, 100 acres eligible for prevented planting coverage minus 100 acres planted equals zero).

(6) In accordance with the provisions of section 6 (Report of Acreage) of the Basic Provisions (§ 457.8), you must report by unit any insurable acreage that you were prevented from planting. This report must be submitted on or before the acreage reporting date. For the purpose of determining acreage eligible for a prevented planting production guarantee, the total amount of prevented planting and planted acres cannot exceed the maximum number of acres eligible for prevented planting coverage. Any acreage you report in excess of the number of acres eligible for prevented planting coverage, or that exceeds the number of eligible acres physically located in a unit, will be deleted from your acreage report.

14. Written Agreements

Designated terms of this policy may be altered by written agreement. The following conditions will apply:

(a) You must apply in writing for each written agreement no later than the sales closing date, except as provided in section 14(e).

(b) The application for written agreement must contain all terms of the contract between you and us that will be in effect if the written agreement is not approved.

(c) If approved, the written agreement will include all variable terms of the contract, including, but not limited to, crop type or variety, the guarantee, premium rate, and price election.

(d) Each written agreement will only be valid for 1 year. If the written agreement is not specifically renewed the following year, insurance coverage for subsequent crop years will be in accordance with the printed policy.

(e) An application for written agreement submitted after the sales closing date may be approved if, after a physical inspection of the acreage, it is determined that no loss has occurred and the crop is insurable in accordance with the policy and written agreement provisions.

Signed in Washington, D.C., on May 23, 1996.

Kenneth D. Ackerman,

Manager, Federal Crop Insurance Corporation.

[FR Doc. 96–13589 Filed 5–30–96; 8:45 am]

BILLING CODE 3410–FA–P

DEPARTMENT OF TRANSPORTATION

Federal Aviation Administration

14 CFR Part 39

[Docket No. 94–NM–55–AD]

RIN 2120–AA64

Airworthiness Directives; Airbus Model A300–600 Series Airplanes

AGENCY: Federal Aviation Administration, DOT.

ACTION: Proposed rule; withdrawal.

SUMMARY: This action withdraws a notice of proposed rulemaking (NPRM) that proposed a new airworthiness directive (AD), applicable to certain Airbus Model A300–600 series airplanes. That action would have required replacement of certain feel and limitation computers (FLC) with modified FLC's. Since the issuance of the NPRM, the Federal Aviation Administration (FAA) has issued other rulemaking that requires actions equivalent to and beyond those proposed. Accordingly, the proposed rule is withdrawn.

FOR FURTHER INFORMATION CONTACT: Tom Groves, Aerospace Engineer, Standardization Branch, ANM–113, FAA, Transport Airplane Directorate, 1601 Lind Avenue, SW., Renton, Washington 98055–4056; telephone (206) 227–1503; fax (206) 227–1149.

SUPPLEMENTARY INFORMATION: A proposal to amend part 39 of the Federal Aviation Regulations (14 CFR part 39) to add a new airworthiness directive (AD), applicable to certain Airbus Model A300–600 series airplanes, was published in the Federal Register as a Notice of Proposed Rulemaking (NPRM) on May 18, 1994 (59 FR 25844). The proposed rule would have required the replacement of certain feel and limitation computers (FLC) with modified FLC's, in accordance with instructions contained in Airbus Service Bulletin A300–27–6025, dated September 15, 1993. That action was prompted by reports that the elevator control on several in-service airplanes operated with stiffness. The proposed actions were intended to prevent stiff operation of the elevator control and undetected loss of the rudder travel limitation function, which may adversely affect the controllability of the airplane.

Actions That Occurred Since the NPRM Was Issued

Since the issuance of that NPRM, the FAA has issued AD 96–09–02, amendment 39–9576 (61 FR 18665, April 29, 1996). That AD requires the installation of modified FLC's on Airbus Model A300–600 series airplanes, as well as other Airbus models. Like the NPRM, that AD was prompted by reports indicating that the elevator control operated with stiffness. The actions required by that AD are intended to prevent stiff operation of the elevator control and undetected loss of rudder travel limitation function, which could adversely affect the controllability of the airplane.

FAA's Conclusions

The requirements of AD 96–09–02 address the same unsafe condition that would have been addressed by the NPRM issued as Docket 94–NM–55–AD. That AD also incorporates and implements the same actions that were proposed by the NPRM, as well as additional actions found necessary to address the unsafe condition comprehensively. In light of this, the issuance of a final action for this NPRM is unnecessary. Accordingly, the proposed rule is hereby withdrawn.

Withdrawal of this NPRM constitutes only such action, and does not preclude the agency from issuing another notice in the future, nor does it commit the agency to any course of action in the future.

Regulatory Impact

Since this action only withdraws a notice of proposed rulemaking, it is neither a proposed nor a final rule and therefore, is not covered under Executive Order 12866, the Regulatory Flexibility Act, or DOT Regulatory Policies and Procedures (44 FR 11034, February 26, 1979).

List of Subjects in 14 CFR Part 39

Air transportation, Aircraft, Aviation safety, Safety.

The Withdrawal

Accordingly, the notice of proposed rulemaking, Docket 94–NM–55–AD, published in the Federal Register on May 18, 1994 (59 FR 25844), is withdrawn.

Issued in Renton, Washington, on May 23, 1996.

John J. Hickey,

Acting Manager, Transport Airplane Directorate, Aircraft Certification Service.

[FR Doc. 96–13611 Filed 5–30–96; 8:45 am]

BILLING CODE 4910–13–U

LIBRARY OF CONGRESS

Copyright Office

37 CFR Ch. II

[Docket No. 96–2]

Eligibility for the Cable Compulsory License

AGENCY: Copyright Office, Library of Congress.

ACTION: Extension of comment period.

SUMMARY: The Copyright Office of the Library of Congress is extending the period for filing reply comments in its rulemaking proceeding considering the eligibility of open video systems for the cable compulsory license.

DATES: Initial comments are due on or before July 5, 1996. Reply comments are due on or before September 13, 1996.

ADDRESSES: If delivered BY MAIL, fifteen copies of written comments should be addressed to the Office of the Copyright General Counsel, Copyright GC/I&R, P.O. Box 70400, Southwest Station, Washington, DC 20024. If delivered BY HAND, fifteen copies of written comments should be brought to: Office of the Copyright General Counsel, James Madison Memorial Building, Room LM–407, First and Independence Avenue, SE., Washington, DC 20540.

FOR FURTHER INFORMATION CONTACT: Marilyn J. Kretsinger, Acting General Counsel, or William Roberts, Senior Attorney for Compulsory Licenses. Telephone (202) 707–8380. Telefax (202) 707–8366.

SUPPLEMENTARY INFORMATION: On May 6, 1996, the Copyright Office of the Library of Congress published a notice of inquiry to consider the eligibility of open video systems (''OVS'') for the cable compulsory license, 17 U.S.C. 111. *See* 61 FR 20197 (May 6, 1996). Initial comments are due July 5, 1996, and reply comments are due August 5, 1996. It has recently come to the attention of the Office that the Federal Communications Commission will be completing a rulemaking proceeding regarding OVS in early August. Because the Commission's adoption of rules may have a bearing on the copyright inquiry, the Office is extending the period for filing reply comments in this proceeding to September 13, 1996, to allow interested parties to submit comments in light of the Commission's final OVS rules.

Dated: May 24, 1996.

Marybeth Peters,

Register of Copyrights.

[FR Doc. 96–13664 Filed 5–30–96; 8:45 am]

BILLING CODE 1410–31–P

FEDERAL COMMUNICATIONS COMMISSION

47 CFR Parts 36 and 69

[CC Docket No. 96–45; DA–96–702]

Federal-State Joint Board on Universal Service

AGENCY: Federal Communications Commission.

ACTION: Proposed rule: Denial of extension of time.

SUMMARY: On May 6, 1996, the Federal Communications Commission (''Commission'') released an Order (''Order'') denying a request to extend the deadline for filing reply comments to its Notice of Proposed Rulemaking and Order Establishing Joint Board, released March 8, 1996 (CC Docket No. 96–45). The Commission denied the request out of concern that further delay in this proceeding might jeopardize the Joint Board's ability to issue a recommended decision within the statutory deadline set forth in the 1996 Telecommunications Act. By not extending the period for filing reply comments, the Commission intends to support the Joint Board in its resolve to announce its recommended decision on or before the statutory deadline of November 8, 1996.

DATES: Reply comments were due on or before May 8, 1996.

ADDRESSES: Comments should be addressed to Office of the Secretary, Federal Communications Commission, 1919 M Street NW., Washington, D.C. 20554.

FOR FURTHER INFORMATION CONTACT: Jon Reel, 202–418–0850, Accounting and Audits Division, Common Carrier Bureau.

SUPPLEMENTARY INFORMATION: On March 8, 1996, the Federal Communications Commission released a Notice of Proposed Rulemaking and Order Establishing Joint Board (''NPRM''), 61 FR 10499 (March 14, 1996). The Commission sought comment on all matters discussed in that NPRM. The deadline for comments was April 8, 1996 and the deadline for reply comments was May 3, 1996. On April 1, 1996, the Commission released an Order that extended the comment period until April 12, 1996 and the reply comment period until May 7, 1996 for all interested parties. On April 30, 1996, Information Renaissance and California Technology Assistance Project (petitioners) filed a joint request for a seven day further extension of the reply comment deadline. Petitioners argued that a further extension would permit parties to avail themselves of the original comments that petitioners had put on the World Wide Web in electronic form, and thereby file reply comments based upon a better knowledge of the original comments. Believing that a further extension of time would seriously jeopardize the Joint Board's ability to issue a recommended decision within the statutory deadline set forth in the Act, the Commission found that the public interest would not be served by a further extension of time. Pursuant to the Commission's rules governing motions for the extension of time (47 CFR § 1.46), however, parties have two business days grace after the Commission acts on a timely filed motion for an extension of time. Because the Commission denied petitioner's motion on May 6, 1996, reply comments were due May 8, 1996.

Federal Communications Commission.

Kenneth P. Moran,

Chief, Accounting and Audits Division, Common Carrier Bureau.

[FR Doc. 96–13667 Filed 5–30–96; 8:45 am]

BILLING CODE 6712–01–P

DEPARTMENT OF TRANSPORTATION

Research and Special Programs Administration

49 CFR Part 195

[Docket PS–140(e); Notice 6]

RIN 2137–AC34

Areas Unusually Sensitive to Environmental Damage

AGENCY: Research and Special Programs Administration (RSPA), DOT.

ACTION: Public workshop.

SUMMARY: RSPA invites industry, government agencies, and the public to the fifth workshop on unusually sensitive areas (USAs). The purpose of this workshop is to openly discuss drinking water resources. This workshop is a continuation of the USA workshops held June 15–16, 1995; October 17, 1995; January 18, 1996; and April 10–11, 1996.

DATES: The workshop will be held on June 18–19, 1996, from 8:30 a.m. to 4:00 p.m. Persons who are unable to attend may submit written comments in duplicate by July 30, 1996. However, persons submitting comments to be considered at the June 18–19 workshop must do so by June 10, 1966. Interested persons should submit as part of their written comments all material that is relevant to a statement of fact or argument. Late filed comments will be considered so far as practicable.

ADDRESSES: The workshop will be held at the U.S. DOT, Nassif Building, 400 Seventh Street SW., Room 6244–48, Washington, DC. Non-federal employee visitors are admitted into the DOT building through the southwest entrance at Seventh and E Streets SW. Persons who want to participate in the workshop should call (202) 366–2392 or e-mail their name, affiliation, and phone number to samesc@rspa.dot.gov before close of business June 10, 1996.

Send written comments in duplicate to the Dockets Unit, Room 8421, RSPA, U.S. DOT, 400 Seventh Street SW., Washington, DC 20590–0001. Identify the docket and notice numbers stated in the heading of this notice.

All comments and docketed materials will be available for inspection and copying in Room 8421 between 8:30 a.m. and 4:30 p.m. each business day. A summary of the workshop will be available from the Dockets Unit about three weeks after the workshop.

FOR FURTHER INFORMATION CONTACT: Christina Sames, (202) 366–4561, about this document, or the Dockets Unit, (202) 366–5046, for copies of this document or other material in the docket.

SUPPLEMENTARY INFORMATION: The pipeline safety laws (49 U.S.C. § 60109) require the Secretary of Transportation to prescribe regulations that establish criteria for identifying each hazardous liquid pipeline facility and gathering line, whether otherwise subject to 49 U.S.C. Chapter 601, located in an area that the Secretary, in consultation with the Environmental Protection Agency (EPA), describes as unusually sensitive to environmental damage if there is a hazardous liquid pipeline accident.

Consistent with the President's regulatory policy (E.O. 12866), RSPA wants to accomplish this congressional mandate at the least cost to society. Toward this end, RSPA is seeking early public participation in the rulemaking process by holding public workshops at which participants, including RSPA staff, may exchange views on relevant issues. RSPA hopes these workshops will enable government and industry to reach a better understanding of the problem and the potential solutions before proposed rules are issued.

To date, RSPA has held four public workshops on unusually sensitive areas (USAs). Participants at the workshops have included representatives from the hazardous liquid pipeline industry; the Departments of Interior, Agriculture, Transportation, and Commerce; EPA;

non-government agencies; and the public.

The first workshop was held on June 15 and 16, 1995, and focused on criteria being considered to determine USAs (60 FR 27948; May 26, 1995). A second workshop held on October 17, 1995, focused on developing a process that could be used to determine if an area is a USA (60 FR 44824; August 29, 1995). The third workshop on January 18, 1996, focused on guiding principles for determining USAs (61 FR 342; January 4, 1996).

Participants at the fourth workshop held April 10–11, 1996, (61 FR 13144; March 26, 1996) discussed the criteria, components, and parameters of the following ten terms that have been used when describing USAs: Significant, Threat of significant contamination, Contamination, Ecological, Drinking water resources, Recreational areas, Economic areas, Cultural areas, Readily available, and Uniform. Participants also discussed the scope and objectives of the additional USA workshops.

Additional information and the results of the four workshops can be obtained from the RSPA Docket Unit at (202) 366–5046. Please reference Docket PS–140, PS–140(a), PS–140(b), and PS–140(c), when requesting the information.

API Technical Meeting

On May 9–10, 1996, the American Petroleum Institute (API) held a meeting of technical experts to discuss drinking water resources. RSPA and EPA attended this meeting and provided a draft discussion point paper on drinking water resources that RSPA intends to discuss at its public workshop on drinking water resources. The draft discussed possible areas of primary concern (also known as USA candidates) and possible filtering criteria that could be used in determining which drinking water resources are unusually sensitive to damage from a hazardous liquid pipeline release. The unedited notes from the API meeting and all materials presented at that meeting can be obtained from the Dockets Unit at the above address. Please reference Docket PS–140(d) when requesting the information.

The following discusses the areas of primary concern and filtering criteria for drinking water resources that are currently being considered. This draft will be discussed in detail at the June 18 and 19 workshop. This draft is not final and RSPA invites comments on these primary concerns, filtering criteria, and issues. This draft and any additional information that is submitted to the docket before June 10 will be considered at the June 18–19 workshop.

Drinking Water Resource Areas of Primary Concern

Drinking water resource areas of primary concern (USA candidates) are a subset of the drinking water surface intakes and groundwater based drinking water supplies. Drinking water USA candidates being considered include:

A. Public Water System (PWS): provides piped water for human consumption to at least 15 service connections or serves an average of at least 25 people for at least 60 days each year. These systems include the sources of the water supplies—i.e., surface or ground, PWSs can be community, nontransient noncommunity, or transient noncommunity systems.

1. *Community Water System (CWS):* a PWS that provides water to the same population year round.

2. *Nontransient Noncommunity Water System (NTNCWS):* a PWS that regularly serves at least 25 of the same people at least six months of the year. [Examples of these systems include schools, factories, and hospitals that have their own water supplies.]

3. *Transient Noncommunity Water System (TNCWS):* a PWS that caters to transitory customers in nonresidential areas (e.g., campgrounds motels, and gas stations).

B. Wellhead Protection Area (WHPA): the surface and subsurface area surrounding a well or well field that supplies a public water system through which contaminants are likely to pass and eventually reach the water well or well field.

C. Sole Source Aquifer (SSA): areas designated by the U.S. Environmental Protection Agency under the Sole Source Aquifer program as the ''sole or principal'' source of drinking water for an area.

Drinking Water Resource Filtering Criteria

Filtering criteria are intended to assist RSPA in determining which areas of primary concern are truly unusually sensitive to damage from a hazardous liquid pipeline release. Drinking water resource filtering criteria would be applied to the drinking water resource areas of primary concern to determine which of the USA candidates are USAs. RSPA is considering the following filtering criteria and has listed issues under each:

Filter Criteria #1: If the public water system is a Transient Noncommunity Water System (TNCWS), the water intakes shall not be designated as USAs.

Filter Criteria #1 Issue: The readily available data source that would be used to make this determination on a nationwide basis is the Federal Reporting Data System (FRDS), that is being replaced by the Safe Drinking Water Information System (SDWIS). There are concerns about the quality of this database and whether it can be used to confidently identify TNCWSs.

Filter Criteria #2: For CWS and NTNCWS that obtain their water supply primarily from surface water sources, and do not have an adequate alternative source of water, the water intakes shall be designated as USAs.

Filter Criteria #2 Issues:

A. A definition is needed for an adequate alternative source of water. The intent is that, in the event of a spill which threatens to shut down a water intake, there would be surface water intakes in a different surface water body that are not in the threat zone, or there would be groundwater sources that could be utilized during the threat period, or there would be other drinking water systems that could temporarily provide drinking water to the shut-down system.

B. There are no readily available national databases on which this filtering criteria could be applied.

Filter Criteria #3: For CWS and NTNCWS that obtain their water supply primarily from groundwater sources, where the source aquifer is identified as a Class I or Class IIa (as identified in Pettyjohn et al., 1991; EPA Document: EPA/600/2–91/043, August 1991; see Attachment A), and that do not have an adequate alternative source of water, the WHPAs for such systems shall be designated as USAs.

Filter Criteria #3 Issues:

A. Determination of the source aquifer is a complex problem, and no national database is available. Furthermore, for some CWS and NTNCWS, the depth of the wells or source aquifer is not known.

B. Seven states do not have Wellhead Protection Programs. Where WHPAs are not adequately delineated, WHPA (criteria, threshold, methods, etc.) will be generated.

C. A definition is needed for an adequate alternative source of water for groundwater systems.

D. The classification system discussed in Filter Criteria #3 (above) has data coverage for the conterminous United States. Data for Alaska, Hawaii, and all other U.S. possessions must be identified.

Filter Criteria #4: For CWS and NTNCWS that obtain their water supply primarily from groundwater sources, where the source aquifer is identified as

a Class IIb, Class IIc or Class U (as identified in Pettyjohn et al., 1991; EPA Document: EPA/600/2–91/043, August 1991; see Attachment A), the public water systems that rely on these aquifers shall not be designated as USAs.

Filter Criteria #5: For CWS and NTNCWS that obtain their water supply primarily from ground water sources, where the source aquifer is identified as a Class I or Class IIa (as identified in Pettyjohn et al., 1991; EPA Document: EPA/600/2–91/043, August 1991; see Attachment A), and the aquifer is designated as a sole source aquifer, an area twice the WHPA shall be designated as an USA.

Issued in Washington, DC, on May 23, 1966.

Richard B. Felder,

Associate Administrator for Pipeline Safety.

Attachment A

Recommended Data Source: EPA Report 600/2–91/043. Regional Assessment of Aquifer Vulnerability and Sensitivity in the Conterminous United States. Office of Research and Development, Washington, DC. 319pp.

The following information was obtained from pages 6–8 of the above report:

CLASS I AQUIFERS (Surficial or shallow, permeable units; highly vulnerable to contamination).

Unconsolidated Aquifers (Class Ia): Class la aquifers consist of surficial, unconsolidated, and permeable alluvial, terrace, outwash, beach, dune and other similar deposits. These units generally contain layers of sand and gravel that, commonly, are interbedded to some degree with silt and clay. Not all deposits mapped as Class la are important water-bearing units, but they are likely to be both permeable and vulnerable. The only natural protection of aquifers of this class is the thickness of the unsaturated zone and the presence of fine-grained material.

Soluble and Fractured Bedrock Aquifers (Class Ib): Lithologies in this class include limestone, dolomite, and locally, evaporitic units that contain documented karst features or solution channels, regardless of size. Generally these systems have a wide range in permeability * * * Also included in this class are sedimentary strata, and metamorphic and igneous (intrusive and extrusive) rocks that are significantly faulted, fractured, or jointed. In all cases groundwater movement is largely controlled by secondary openings. Well yields range widely, but the important feature is the potential for rapid vertical and lateral ground water movement along preferred pathways, which result in a high degree of vulnerability.

Semiconsolidated Aquifers (Class Ic): Semiconsolidated systems generally contain poorly to moderately indurated sand and gravel that is interbedded with clay and silt. This group is intermediate to the unconsolidated and consolidated end members. These systems are common in the Tertiary age rocks that are exposed throughout the Gulf and Atlantic coastal states. Semiconsolidated conditions also arise from the presence of intercalated clay and caliche within primarily unconsolidated to poorly consolidated units, such as occurs in parts of the High Plains Aquifer.

Covered Aquifers (Class Id): This class consists of any Class I aquifer that is overlain by less than 50 feet of low permeability, unconsolidated material, such as glacial till, lacustrian, and loess deposits.

CLASS II AQUIFERS (Consolidated bedrock aquifers; moderately vulnerable).

Higher Yield Bedrock Aquifers (Class IIa): These aquifers generally consist of fairly permeable sandstone or conglomerate that contain lesser amounts of interbedded fine grained clastics (shale, siltstone, mudstone) and occasionally carbonate units. In general, well yields must exceed 50 gpm to be included in this class. Locally fracturing may contribute to the dominant primary porosity and permeability of these systems.

Lower Yield Bedrock Aquifers (Class IIb): In most cases, these aquifers consist of sedimentary or crystalline rocks. Most commonly, lower yield systems consist of the same classic rock types present in the higher yield systems, but in the former case grain size is generally smaller and the degree of cementation or induration is greater, both of which lead to a lower permeability. In many existing and ancient mountain regions, such as the Appalachians (Blue Ridge and Piedmont), the core consists of crystalline rocks that are fractured to some degree. Well yields are commonly less than 50 gpm, although they may be larger in valleys than on interstream divides.

Covered Bedrock Aquifers (Class IIc): This group consists of Class IIa and IIb aquifers that are overlain by less than 50 feet of unconsolidated material of loq permeability, such as glacial till, lacustrian, or loess deposits. It is assumed that most Class V wells are relatively shallow and, therefore, 50 feet or less of fine grained cover could reduce but not necessarily eliminate the vulnerability of underlying Class II systems.

CLASS III (Consolidated or unconsolidated aquifers that are overlain by more than 50 feet of low permeability material; low vulnerability).

Aquifers of this type are the least vulnerable of all the classes because they are naturally protected by a thick layer of fine grained material, such as glacial till or shale. Examples include parts of the Northern Great Plains where the Pierre Shale of Cretaceous age crops out over thousands of square miles and is hundreds of feet thick. In many of the glaciated states, till forms an effective cover over bedrock or buried outwash aquifers, and elsewhere alternating layers of shale, siltstone, and fine grained sandstone insulate and protect the deeper major water bearing zones * * *

CLASS U (Undifferentiated aquifers): This classification is used where several lithologic and hydrologic conditions are present within a mappable area. Units are assigned to this class because of constraints of mapping scale, the presenece of undelineated members within a formation or group, or the presence of nonuniformly occurring features, such as fracturing. This class is intended to convey a wider range of vulnerability than is usually contained within any other single class.

SUBCLASS V (Variable covered aquifers): The modifier ''v'', such as Class IIa–v, is used to describe areas where an undetermined or highly variable thickness of low permeability sediments overlie the major water bearing zone. To provide the largest amount of information, the underlying aquifer was mapped as if the cover were absent, and the ''v'' designation was added to the classification. The ''v'' indicates that a variable thickness of low permeability material covers the aquifer and, since the thickness of the cover, to a large degree, controls vulnerability, this aspect is undefined.

[FR Doc. 96–13530 Filed 5–30–96; 8:45 am]

BILLING CODE 4910–60–M

National Highway Traffic Safety Administration

49 CFR Part 571

[Docket No. 96–51, Notice 01]

RIN 2127–AG16

Federal Motor Vehicle Safety Standards Door Locks and Door Retention Components

AGENCY: National Highway Traffic Safety Administration (NHTSA), Department of Transportation (DOT).

ACTION: Grant of petition for rulemaking.

SUMMARY: This notice grants a petition for rulemaking submitted by Independent Mobility Systems, Inc. (IMS), to exclude wheelchair ramps from the Federal motor vehicle safety standard that establishes performance requirements for door locks and door retention components. Since side doors equipped with wheelchair lifts are excluded from the standard, the petitioner requests that the standard be amended to also exclude side doors equipped with wheelchair ramps.

NHTSA believes that the amendment suggested by IMS merits further research and study. To that extent, therefore, the agency grants IMS' petition. The granting of this petition, however, does not necessarily mean that a rule will be issued.

The determination of whether to issue a rule will be made in the course of the rulemaking proceeding in accordance with statutory criteria.

FOR FURTHER INFORMATION CONTACT: *For technical issues:* Mr. Maurice Hicks, Light Duty Vehicle Division, Office of Crashworthiness Standards, National Highway Traffic Safety Administration, 400 Seventh Street, SW., Washington, DC 20590; telephone (202) 366–6345; facsimile (202) 366–4329.

For legal issues: Walter Myers, Office of the Chief Counsel, National Highway

Traffic Safety Administration, Washington, DC 20590; telephone (202) 366–2992; facsimile (202) 366–3820.

SUPPLEMENTARY INFORMATION: Federal motor vehicle safety standard (Standard) No. 206, Door locks and door retention components, specifies strength requirements for door locks and door retention components, including latches, hinges, locks, and other door supporting means. The purpose of the standard is to minimize the likelihood of inadvertent door opening and consequent occupant ejection from the vehicle in the event of a crash or other unintended release of the door latch. Excluded from the requirements of the standard are, among others:

> [S]ide doors which are equipped with wheelchair lifts and which are linked to an alarm system consisting of either a flashing visible signal located in the driver's compartment or an alarm audible to the driver which is activated when the door is open.

This exclusion was added to paragraph S4 of the standard by final rule dated March 27, 1985 (50 FR 12029), in response to a petition for rulemaking submitted by Thomas Built Buses, Inc. The agency's rationale for excluding doors equipped with wheelchair lifts was that when lifts of the Thomas Built design were retracted, they were secured in position by either hydraulic pressure in the extension/retraction cylinders and mechanical latches, or by electrically-operated drive mechanisms. The metal grate floors of the lifts were stowed in a vertical position parallel to and in close proximity with the interior surface of the vehicle door. Thus, in its retracted position, the wheelchair lift could provide an adequate barrier to occupant ejection from the vehicle if the door were to open while the vehicle was moving or if involved in a collision. The final rule also required a visual or audible alarm system designed to be activated if the door opened while the ignition was on. Such alarm would ensure that the lift is kept in its retracted position and the door is kept closed while the vehicle is in operation.

On May 18, 1995, IMS wrote a letter to NHTSA stating that the company converts minivans into wheelchair accessible vehicles by lowering the vehicle floor and adding a wheelchair ramp to the right rear sliding door area. The ramp retracts into a vertical position parallel to and in close proximity to the vehicle door when not in use. IMS also equips the doors with an audible and/or visual alarm system. IMS asked, therefore, whether the exclusion of wheelchair lifts from the provisions of Standard No. 206 would also apply to the wheelchair ramps with which IMS equips its vehicle conversions. NHTSA responded that the term ''wheelchair lifts'' did not include wheelchair ramps. The agency noted that the two components shared many similar characteristics, however, and that IMS was free to petition the agency for rulemaking to amend the standard by adding wheelchair ramps to the current exclusions from the standard.

The Petition

IMS petitioned the agency to amend Standard No. 206 to exclude from the standard those multipurpose passenger vehicles (MPV) that are equipped with wheelchair ramps for the transportation of wheelchair users. IMS argued that because wheelchair lifts and ramps serve the same purpose and are similarly configured when in the stowed position, the rationale for excluding wheelchair lifts from the standard should also apply to wheelchair ramps. Accordingly, IMS urged that paragraph S4 of the standard be amended to exclude wheelchair ramps from the standard in addition to the existing exclusions.

Agency Analysis and Decision

The IMS petition requesting exclusion of ramps from the standard is based on the similarity of performance characteristics of wheelchair lifts and ramps. NHTSA evaluation, however, has revealed several structural differences between the IMS ramp and the Thomas Built lift on which the current exclusion was based. In fact, most ramps and lifts currently produced are structurally different from the Thomas Built lift.

A schematic of the IMS ramp is shown in Figure 1. The IMS ramp operates much like a lift, in that it retracts into the vehicle in a vertical position that is parallel to and in close proximity of the vehicle door. However, in its retracted position, the ramp can detach and swing open like a gate to permit ingress and egress of ambulatory people, with a latch at the lower part of the gate to hold it in place. Finally, the IMS ramp in question, when in the retracted position, does not completely cover the doorway opening. The ramp folds into the vehicle to a position that covers from one-half to three- fourths of the doorway, the intent being to avoid obstructing the driver's vision to the side.

NHTSA's evaluation of the lift and ramp designs revealed a wide variety of lift and ramp designs produced by other manufacturers, including those that retract under the vehicle, those that suspend within the door sill (which lifts the wheelchair user by means of a pulley), those that retract within the vehicle parallel to the floor, and some that are, like the IMS ramp, detachable from at least one side. Also like the IMS ramp, many lifts and ramps produced by other manufacturers do not cover the entire door.

In order to install the IMS ramp in a vehicle, the vehicle is altered by lowering the floor between the firewall and the rear axle. This alteration is commonly performed on most lift/ramp-equipped vans and MPVs. The original floor is replaced with an interior panel of 16-gauge steel and an exterior panel of 18-gauge steel. Both are hollow z-member panels which together have an equivalent thickness of one inch. The lower edge of the side sliding door is extended to meet the lowered floor and the lower track of the sliding door is refitted to accommodate the larger door. Structurally, the sliding track guide is similar to the vehicle's original track guide for non-electric doors. For electric doors, however, the design is significantly different. Specifically, the installation of the electric IMS ramp requires that the latch be disabled to accommodate the electric track closing and opening the door.

Because of the many different designs of wheelchair lifts and ramps currently being produced, the agency is concerned that its exclusion of wheelchair lifts from the requirements of the standard, based on the then-current Thomas Built design, may be overly broad. At the same time, the agency believes that wheelchair ramps and lifts are essential to the safe and efficient transportation of persons with disabilities. Accordingly, the change requested by IMS warrants further investigation and research into the installation and manner of operation of the various wheelchair lift and ramp designs currently in production, with a view toward adoption of uniform criteria for both. To that extent, therefore, the agency grants the IMS petition.

The granting of the IMS petition, however, does not necessarily mean that a rule will be issued. The determination of whether to issue a rule is made after study of the requested action and the various alternatives thereto in the course of the rulemaking proceeding, in accordance with statutory criteria.

List of Subjects in 49 CFR Part 571

Imports, Motor vehicle safety, Motor vehicles, Rubber and rubber products, Tires.

Authority: 49 U.S.C. §§ 322, 30111, 30115, 30117, and 30166; delegation of authority at 49 CFR 1.50.

BILLING CODE 4910–59–P

FIGURE 1 - IMS ELECTRIC RAMP CONFIGURATION

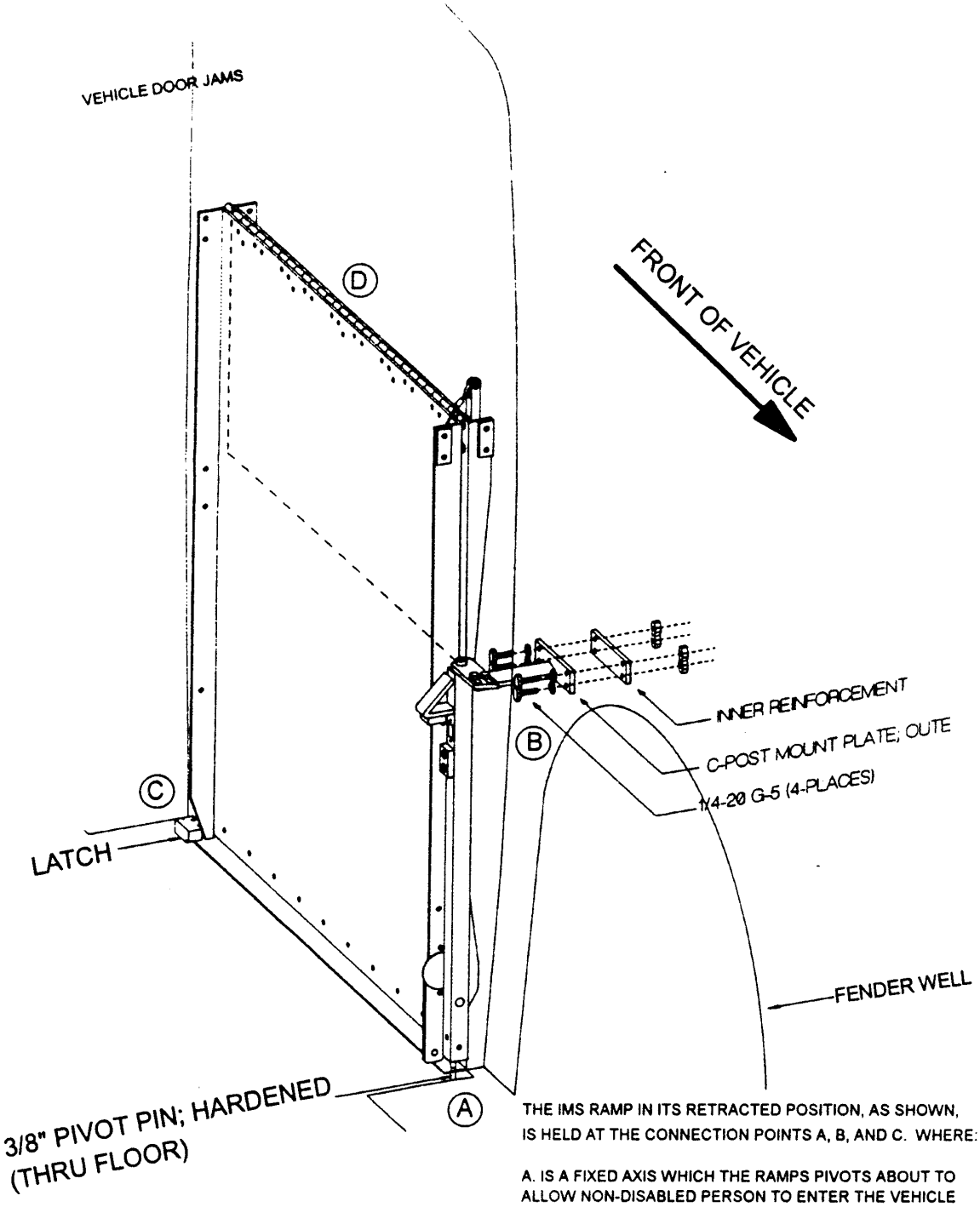

THE IMS RAMP IN ITS RETRACTED POSITION, AS SHOWN, IS HELD AT THE CONNECTION POINTS A, B, AND C. WHERE:

A. IS A FIXED AXIS WHICH THE RAMPS PIVOTS ABOUT TO ALLOW NON-DISABLED PERSON TO ENTER THE VEHICLE

B. IS A CONNECTION POINT AND MANUAL RELEASE TO ALLOW THE RAMP TO EXTRACT FROM THE VEHICLE.

C. IS A CONNECTION POINT WITH A LATCH WHICH PREVENTS THE RAMP FROM PIVOTING ABOUT POINT A.

D. IS THE LOWER PART OF THE RAMP WHICH EXTENDS WHILE THE RAMP IS EXTRACTING FROM THE VEHICLE.

Issued on May 27, 1996.

Barry Felrice,

Associate Administrator for Safety Performance Standards.

[FR Doc. 96–13711 Filed 5–30–96; 8:45 am]

BILLING CODE 4910–59–C

Notices

Federal Register
Vol. 61, No. 106
Friday, May 31, 1996

This section of the FEDERAL REGISTER contains documents other than rules or proposed rules that are applicable to the public. Notices of hearings and investigations, committee meetings, agency decisions and rulings, delegations of authority, filing of petitions and applications and agency statements of organization and functions are examples of documents appearing in this section.

DEPARTMENT OF AGRICULTURE

Office of the Secretary

Secretary of Agriculture's Special Cotton Import Quota Announcement Number 9

AGENCY: Office of the Secretary, USDA.

ACTION: Notice.

SUMMARY: A special import quota for upland cotton equal to 42,168,963 kilograms (92,966,725 pounds) is established in accordance with section 136(b) of the Federal Agriculture Improvement and Reform Act of 1996 (the 1996 Act) under Presidential Proclamation 6301 of June 7, 1991. The quota is referenced as the Secretary of Agriculture's Special Cotton Import Quota Announcement Number 9, effective April 29, 1996, and is set forth in subheading 9903.52.09, subchapter III, chapter 99 of the Harmonized Tariff Schedule of the United States (HTS).

DATES: The quota was established on April 29, 1996, and applies to upland cotton purchased not later than July 27, 1996 (90 days from the date the quota was established), and entered into the United States not later than October 25, 1996 (180 days from the date the quota was established).

FOR FURTHER INFORMATION CONTACT: Janise Zygmont, Farm Service Agency, United States Department of Agriculture, room 3756–S, Ag Code 0515, PO Box 2415, Washington, DC 20013–2415 or call (202) 720–8841.

SUPPLEMENTARY INFORMATION: The 1996 Act requires that a special cotton import quota be determined and announced immediately if, for any consecutive 10-week period, the Friday through Thursday average price quotation for the lowest-priced U.S. growth, as quoted for Middling 1 3/32 inch cotton, C.I.F. northern Europe (U.S. Northern Europe price), adjusted for the value of any cotton user marketing certificates issued, exceeds the Northern Europe price by more than 1.25 cents per pound. This condition was met during the consecutive 10-week period that ended March 14, 1996. Therefore, a quota referenced as the Secretary of Agriculture's Special Cotton Import Quota Announcement Number 9, effective April 29, 1996, is hereby established.

Because there are only twenty subheadings available for designating upland cotton special import quotas in subchapter III of chapter 99 of the HTS, only twenty such quotas can be in effect at one time. Each subheading corresponds to a Secretary of Agriculture's Special Cotton Import Quota Announcement specifying that a particular amount of upland cotton may be imported during a particular 180-day period. The twenty-first consecutive quota cannot be established until the earliest of the existing twenty quotas ends. Therefore, the special import quota described in this notice opened on April 29, 1996—the day after the quota 9 in existence at the time of the announcement ended.

The quota amount, 42,168,963 kilograms (92,966,725 pounds), is equal to 1 week's consumption of upland cotton by domestic mills at the seasonally-adjusted average rate of the most recent 3 months for which data are available—November 1995 through January 1996. The special cotton import quota identifies a quantity of imports that is not subject to the over-quota tariff rate of a tariff-rate quota. The quota is not divided by staple length or by country of origin. The quota does not affect existing tariff rates or phytosanitary regulations. The quota does not apply to Extra Long Staple cotton.

Authority: Sec. 136, P.L. 104–127 and U.S. Note 6(a), Subchapter III, Chapter 99 of the HTS.

Signed at Washington, D.C. on May 21, 1996.

Dan Glickman,

Secretary.

[FR Doc. 96–13645 Filed 5–30–96; 8:45 am]

BILLING CODE 3410–05–P

Secretary of Agriculture's Special Cotton Import Quota Announcement Number 14

AGENCY: Office of the Secretary, USDA.

ACTION: Notice.

SUMMARY: A special import quota for upland cotton equal to 41,858,494 kilograms (92,282,258 pounds) is established in accordance with section 136(b) of the Federal Agriculture Improvement and Reform Act of 1996 (the 1996 Act) under Presidential Proclamation 6301 of June 7, 1991. The quota is referenced as the Secretary of Agriculture's Special Cotton Import Quota Announcement Number 14, effective June 3, 1996, and is set forth in subheading 9903.52.14, subchapter III, chapter 99 of the Harmonized Tariff Schedule of the United States (HTS).

DATES: The quota was established on June 3, 1996, and applies to upland cotton purchased not later than August 31, 1996 (90 days from the date the quota was established), and entered into the United States not later than November 29, 1996 (180 days from the date the quota was established).

FOR FURTHER INFORMATION CONTACT: Janise Zygmont, Farm Service Agency, United States Department of Agriculture, room 3756–S, Ag Code 0515, PO Box 2415, Washington, DC 20013–2415 or call (202) 720–8841.

SUPPLEMENTARY INFORMATION: The 1996 Act requires that a special cotton import quota be determined and announced immediately if, for any consecutive 10-week period, the Friday through Thursday average price quotation for the lowest-priced U.S. growth, as quoted for Middling 1 3/32 inch cotton, C.I.F. northern Europe (U.S. Northern Europe price), adjusted for the value of any cotton user marketing certificates issued, exceeds the Northern Europe price by more than 1.25 cents per pound. This condition was met during the consecutive 10-week period that ended April 18, 1996. Therefore, a quota referenced as the Secretary of Agriculture's Special Cotton Import Quota Announcement Number 14, effective June 3, 1996, is hereby established.

Because there are only twenty subheadings available for designating upland cotton special import quotas in subchapter III of chapter 99 of the HTS, only twenty such quotas can be in effect at one time. Each subheading corresponds to a Secretary of Agriculture's Special Cotton Import Quota Announcement specifying that a particular amount of upland cotton may be imported during a particular 180-day period. The twenty-first consecutive

quota cannot be established until the earliest of the existing twenty quotas ends. Therefore, the special import quota described in this notice opened on June 3, 1996—the day after the quota 14 in existence at the time of the announcement ended.

The quota amount, 41,858,494 kilograms (92,282,258 pounds), is equal to 1 week's consumption of upland cotton by domestic mills at the seasonally-adjusted average rate of the most recent 3 months for which data are available—December 1995 through February 1996. The special cotton import quota identifies a quantity of imports that is not subject to the over-quota tariff rate of a tariff-rate quota. The quota is not divided by staple length or by country of origin. The quota does not affect existing tariff rates or phytosanitary regulations. The quota does not apply to Extra Long Staple cotton.

Authority: Sec. 136, P.L. 104–127 and U.S. Note 6(a), Subchapter III, Chapter 99 of the HTS.

Signed at Washington, D.C. on May 21, 1996.

Dan Glickman,

Secretary.

[FR Doc. 96–13646 Filed 5–30–96; 8:45 am]

BILLING CODE 3410–05–P

Secretary of Agriculture's Special Cotton Import Quota Announcement Number 10

AGENCY: Office of the Secretary, USDA.

ACTION: Notice.

SUMMARY: A special import quota for upland cotton equal to 41,858,494 kilograms (92,282,258 pounds) is established in accordance with section 136(b) of the Federal Agriculture Improvement and Reform Act of 1996 (the 1996 Act) under Presidential Proclamation 6301 of June 7, 1991. The quota is referenced as the Secretary of Agriculture's Special Cotton Import Quota Announcement Number 10, effective May 6, 1996, and is set forth in subheading 9903.52.10, subchapter III, chapter 99 of the Harmonized Tariff Schedule of the United States (HTS).

DATES: The quota was established on May 6, 1996, and applies to upland cotton purchased not later than August 3, 1996 (90 days from the date the quota was established), and entered into the United States not later than November 1, 1996 (180 days from the date the quota was established).

FOR FURTHER INFORMATION CONTACT: Janise Zygmont, Farm Service Agency, United States Department of Agriculture, room 3756–S, Ag Code 0515, PO Box 2415, Washington, DC 20013–2415 or call (202) 720–8841.

SUPPLEMENTARY INFORMATION: The 1996 Act requires that a special cotton import quota be determined and announced immediately if, for any consecutive 10-week period, the Friday through Thursday average price quotation for the lowest-priced U.S. growth, as quoted for Middling 1 3/32 inch cotton, C.I.F. northern Europe (U.S. Northern Europe price), adjusted for the value of any cotton user marketing certificates issued, exceeds the Northern Europe price by more than 1.25 cents per pound. This condition was met during the consecutive 10-week period that ended March 21, 1996. Therefore, a quota referenced as the Secretary of Agriculture's Special Cotton Import Quota Announcement Number 10, effective May 6, 1996, is hereby established.

Because there are only twenty subheadings available for designating upland cotton special import quotas in subchapter III of chapter 99 of the HTS, only twenty such quotas can be in effect at one time. Each subheading corresponds to a Secretary of Agriculture's Special Cotton Import Quota Announcement specifying that a particular amount of upland cotton may be imported during a particular 180-day period. The twenty-first consecutive quota cannot be established until the earliest of the existing twenty quotas ends. Therefore, the special import quota described in this notice opened on May 6, 1996—the day after the quota 10 in existence at the time of the announcement ended.

The quota amount, 41,858,494 kilograms (92,282,258 pounds), is equal to 1 week's consumption of upland cotton by domestic mills at the seasonally-adjusted average rate of the most recent 3 months for which data are available—December 1995 through February 1996. The special cotton import quota identifies a quantity of imports that is not subject to the over-quota tariff rate of a tariff-rate quota. The quota is not divided by staple length or by country of origin. The quota does not affect existing tariff rates or phytosanitary regulations. The quota does not apply to Extra Long Staple cotton.

Authority: Sec. 136, P.L. 104–127 and U.S. Note 6(a), Subchapter III, Chapter 99 of the HTS.

Signed at Washington, D.C. on May 21, 1996.

Dan Glickman,

Secretary.

[FR Doc. 96–13647 Filed 5–30–96; 8:45 am]

BILLING CODE 3410–05–P

Secretary of Agriculture's Special Cotton Import Quota Announcement Number 11

AGENCY: Office of the Secretary, USDA.

ACTION: Notice.

SUMMARY: A special import quota for upland cotton equal to 41,858,494 kilograms (92,282,258 pounds) is established in accordance with section 136(b) of the Federal Agriculture Improvement and Reform Act of 1996 (the 1996 Act) under Presidential Proclamation 6301 of June 7, 1991. The quota is referenced as the Secretary of Agriculture's Special Cotton Import Quota Announcement Number 11, effective May 13, 1996, and is set forth in subheading 9903.52.11, subchapter III, chapter 99 of the Harmonized Tariff Schedule of the United States (HTS).

DATES: The quota was established on May 13, 1996, and applies to upland cotton purchased not later than August 10, 1996 (90 days from the date the quota was established), and entered into the United States not later than November 8, 1996 (180 days from the date the quota was established).

FOR FURTHER INFORMATION CONTACT: Janise Zygmont, Farm Service Agency, United States Department of Agriculture, room 3756–S, Ag Code 0515, PO Box 2415, Washington, DC 20013–2415 or call (202) 720–8841.

SUPPLEMENTARY INFORMATION: The 1996 Act requires that a special cotton import quota be determined and announced immediately if, for any consecutive 10-week period, the Friday through Thursday average price quotation for the lowest-priced U.S. growth, as quoted for Middling 1 3/32 inch cotton, C.I.F. northern Europe (U.S. Northern Europe price), adjusted for the value of any cotton user marketing certificates issued, exceeds the Northern Europe price by more than 1.25 cents per pound. This condition was met during the consecutive 10-week period that ended March 28, 1996. Therefore, a quota referenced as the Secretary of Agriculture's Special Cotton Import Quota Announcement Number 11, effective May 13, 1996, is hereby established.

Because there are only twenty subheadings available for designating upland cotton special import quotas in subchapter III of chapter 99 of the HTS,

only twenty such quotas can be in effect at one time. Each subheading corresponds to a Secretary of Agriculture's Special Cotton Import Quota Announcement specifying that a particular amount of upland cotton may be imported during a particular 180-day period. The twenty-first consecutive quota cannot be established until the earliest of the existing twenty quotas ends. Therefore, the special import quota described in this notice opened on May 13, 1996—the day after the quota 11 in existence at the time of the announcement ended.

The quota amount, 41,858,494 kilograms (92,282,258 pounds), is equal to 1 week's consumption of upland cotton by domestic mills at the seasonally-adjusted average rate of the most recent 3 months for which data are available—December 1995 through February 1996. The special cotton import quota identifies a quantity of imports that is not subject to the over-quota tariff rate of a tariff-rate quota. The quota is not divided by staple length or by country of origin. The quota does not affect existing tariff rates or phytosanitary regulations. The quota does not apply to Extra Long Staple cotton.

Authority: Sec. 136, P.L. 104–127 and U.S. Note 6(a), Subchapter III, Chapter 99 of the HTS.

Signed at Washington, D.C. on May 21, 1996.

Dan Glickman,

Secretary.

[FR Doc. 96–13648 Filed 5–30–96; 8:45 am]

BILLING CODE 3410–05–P

Secretary of Agriculture's Special Cotton Import Quota Announcement Number 12

AGENCY: Office of the Secretary, USDA.

ACTION: Notice.

SUMMARY: A special import quota for upland cotton equal to 41,858,494 kilograms (92,282,258 pounds) is established in accordance with section 136(b) of the Federal Agriculture Improvement and Reform Act of 1996 (the 1996 Act) under Presidential Proclamation 6301 of June 7, 1991. The quota is referenced as the Secretary of Agriculture's Special Cotton Import Quota Announcement Number 12, effective May 20, 1996, and is set forth in subheading 9903.52.12, subchapter III, chapter 99 of the Harmonized Tariff Schedule of the United States (HTS).

DATES: The quota was established on May 20, 1996, and applies to upland cotton purchased not later than August 17, 1996 (90 days from the date the quota was established), and entered into the United States not later than November 15, 1996 (180 days from the date the quota was established).

FOR FURTHER INFORMATION CONTACT: Janise Zygmont, Farm Service Agency, United States Department of Agriculture, room 3756–S, Ag Code 0515, PO Box 2415, Washington, DC 20013–2415 or call (202) 720–8841.

SUPPLEMENTARY INFORMATION: The 1996 Act requires that a special cotton import quota be determined and announced immediately if, for any consecutive 10-week period, the Friday through Thursday average price quotation for the lowest-priced U.S. growth, as quoted for Middling 1 3/32 inch cotton, C.I.F. northern Europe (U.S. Northern Europe price), adjusted for the value of any cotton user marketing certificates issued, exceeds the Northern Europe price by more than 1.25 cents per pound. This condition was met during the consecutive 10-week period that ended April 4, 1996. Therefore, a quota referenced as the Secretary of Agriculture's Special Cotton Import Quota Announcement Number 12, effective May 20, 1996, is hereby established.

Because there are only twenty subheadings available for designating upland cotton special import quotas in subchapter III of chapter 99 of the HTS, only twenty such quotas can be in effect at one time. Each subheading corresponds to a Secretary of Agriculture's Special Cotton Import Quota Announcement specifying that a particular amount of upland cotton may be imported during a particular 180-day period. The twenty-first consecutive quota cannot be established until the earliest of the existing twenty quotas ends. Therefore, the special import quota described in this notice opened on May 20, 1996—the day after the quota 12 in existence at the time of the announcement ended.

The quota amount, 41,858,494 kilograms (92,282,258 pounds), is equal to 1 week's consumption of upland cotton by domestic mills at the seasonally-adjusted average rate of the most recent 3 months for which data are available—December 1995 through February 1996. The special cotton import quota identifies a quantity of imports that is not subject to the over-quota tariff rate of a tariff-rate quota. The quota is not divided by staple length or by country of origin. The quota does not affect existing tariff rates or phytosanitary regulations. The quota does not apply to Extra Long Staple cotton.

Authority: Sec. 136, P.L. 104–127 and U.S. Note 6(a), Subchapter III, Chapter 99 of the HTS.

Signed at Washington, DC on May 21, 1996.

Dan Glickman,

Secretary.

[FR Doc. 96–13649 Filed 5–30–96; 8:45 am]

BILLING CODE 3410–05–P

Secretary of Agriculture's Special Cotton Import Quota Announcement Number 13

AGENCY: Office of the Secretary, USDA.

ACTION: Notice.

SUMMARY: A special import quota for upland cotton equal to 41,858,494 kilograms (92,282,258 pounds) is established in accordance with section 136(b) of the Federal Agriculture Improvement and Reform Act of 1996 (the 1996 Act) under Presidential Proclamation 6301 of June 7, 1991. The quota is referenced as the Secretary of Agriculture's Special Cotton Import Quota Announcement Number 13, effective May 27, 1996, and is set forth in subheading 9903.52.13, subchapter III, chapter 99 of the Harmonized Tariff Schedule of the United States (HTS).

DATES: The quota was established on May 27, 1996, and applies to upland cotton purchased not later than August 24, 1996 (90 days from the date the quota was established), and entered into the United States not later than November 22, 1996 (180 days from the date the quota was established).

FOR FURTHER INFORMATION CONTACT: Janise Zygmont, Farm Service Agency, United States Department of Agriculture, room 3756–S, Ag Code 0515, PO Box 2415, Washington, DC 20013–2415 or call (202) 720–8841.

SUPPLEMENTARY INFORMATION: The 1996 Act requires that a special cotton import quota be determined and announced immediately if, for any consecutive 10-week period, the Friday through Thursday average price quotation for the lowest-priced U.S. growth, as quoted for Middling 1 3/32 inch cotton, C.I.F. northern Europe (U.S. Northern Europe price), adjusted for the value of any cotton user marketing certificates issued, exceeds the Northern Europe price by more than 1.25 cents per pound. This condition was met during the consecutive 10-week period that ended April 11, 1996. Therefore, a quota referenced as the Secretary of Agriculture's Special Cotton Import Quota Announcement Number 13, effective May 27, 1996, is hereby established.

Because there are only twenty subheadings available for designating upland cotton special import quotas in subchapter III of chapter 99 of the HTS, only twenty such quotas can be in effect at one time. Each subheading corresponds to a Secretary of Agriculture's Special Cotton Import Quota Announcement specifying that a particular amount of upland cotton may be imported during a particular 180-day period. The twenty-first consecutive quota cannot be established until the earliest of the existing twenty quotas ends. Therefore, the special import quota described in this notice opened on May 27, 1996—the day after the quota 13 in existence at the time of the announcement ended.

The quota amount, 41,858,494 kilograms (92,282,258 pounds), is equal to 1 week's consumption of upland cotton by domestic mills at the seasonally-adjusted average rate of the most recent 3 months for which data are available—December 1995 through February 1996. The special cotton import quota identifies a quantity of imports that is not subject to the over-quota tariff rate of a tariff-rate quota. The quota is not divided by staple length or by country of origin. The quota does not affect existing tariff rates or phytosanitary regulations. The quota does not apply to Extra Long Staple cotton.

Authority: Sec. 136, P.L. 104–127 and U.S. Note 6(a), Subchapter III, Chapter 99 of the HTS.

Signed at Washington, DC on May 21, 1996.

Dan Glickman,

Secretary.

[FR Doc. 96–13650 Filed 5–30–96; 8:45 am]

BILLING CODE 3410–05–P

Forest Service

Newspapers Used for Publication of Legal Notice of Appealable Decisions for the Northern Region; Idaho, Montana, North Dakota, and Portions of South Dakota and Eastern Washington

AGENCY: Forest Service, USDA.

ACTION: Notice.

SUMMARY: This notice lists the newspapers that will be used by all Ranger Districts, Forests, and the Regional Office of the Northern Region to publish legal notice of all decisions subject to appeal under 36 CFR 215 and 217 and to publish notices for public comment and notice of decision subject to the provisions of 36 CFR 215. The intended effect of this action is to inform interested members of the public which newspapers will be used to publish legal notices for public comment or decisions; thereby allowing them to receive constructive notice of a decision, to provide clear evidence of timely notice, and to achieve consistency in administering the appeals process.

DATES: Publication of legal notices in the listed newspapers will begin with decisions subject to appeal that are made on or after May 23, 1996. The list of newspapers will remain in effect until another notice is published in the Federal Register.

FOR FURTHER INFORMATION CONTACT: Edward C. Monnig; Acting Regional Appeals and Litigation Coordinator; Northern Region; P.O. Box 7669; Missoula, Montana 59807. Phone: (406) 239–3647.

The newspapers to be used are as follows:

Northern Regional Office

Regional Forester decisions in Montana: The Missoulian, Great Falls Tribune, and The Billings Gazette.

Regional Forester decisions in Northern Idaho and Eastern Washington: The Spokesman Review.

Regional Forester decisions in North Dakota: Bismarck Tribune.

Regional Forester decisions in South Dakota: Rapid City Journal.

Beaverhead/Deerlodge—Montana Standard.

Bitterroot—Ravalli Republic.

Clearwater—Lewiston Morning Tribune.

Custer—Billings Gazette (Montana), Bismarck Tribune (North Dakota), Rapid City Journal (South Dakota).

Flathead—Daily Interlake.

Gallatin—Bozeman Chronicle.

Helena—Independent Record.

Idaho Panhandle—Spokesman Review.

Kootenai—Daily Interlake.

Lewis & Clark—Great Falls Tribune.

Lolo—Missoulian.

Nez Perce—Lewiston Morning Tribune.

Supplemental notices may be placed in any newspaper, but time frames/deadlines will be calculated based upon notices in newspapers of record listed above.

Dated: May 23, 1996.

Richard M. Bacon,

Deputy Regional Forester.

[FR Doc. 96–13677 Filed 5–30–96; 8:45 am]

BILLING CODE 3410–11–M

Rural Utilities Service

LaGrange County, Indiana Sewer District; Final Programmatic Environmental Impact Statement

AGENCY: Rural Utilities Service, USDA.

ACTION: Notice of Availability of Final Programmatic Environmental Impact Statement.

SUMMARY: Notice is hereby given that the Rural Utilities Service (RUS) is issuing a final Programmatic Environmental Impact Statement (PEIS) related to the LaGrange County, Indiana Sewer District's proposal to construct sanitary wastewater collection and treatment facilities for residential population centers. The final PEIS was prepared pursuant to the National Environmental Policy Act of 1969 (NEPA) (U.S.C. 4231 *et seq.*) in accordance with the Council on Environmental Quality (CEQ) regulations for implementing the procedural provisions of NEPA (40 CFR 1500–1508) and Farmers Home Administration's procedure (7 CFR 1940, Subpart G, Environmental Program). RUS invites comments on the alternative analyses performed by and addressed in the final PEIS.

The purpose of this PEIS is to evaluate the environmental impacts of proposed alternative strategies to provide treatment of sanitary wastewaters for rural residential population centers in LaGrange County. Discussion of each alternative's impact on the human environment, including risks to public health and safety, and effects on the natural environment is presented. The proposed action is necessary in order to respond to increased public health concerns and the continuation of surface and ground water degradation caused by inadequately treated wastewater effluent. This PEIS provides a planning tool to County officials and citizens and engineers who will select the most appropriate design and implementation strategy to address LaGrange County's wastewater problems.

The Preferred Alternative

Fund a Decentralized Wastewater Collection and Treatment System for Residents in Densely Populated Areas Using Engineered Wetlands Treatment Processes: This alternative involves the use of pressure or gravity collection systems to convey wastewater to multiple engineered wetland treatment facilities. Collection and conveyance technologies considered for this option will be the same as those analyzed for the centralized treatment facility option.

Treatment alternatives for this option will include: wetlands application followed by land application (spray irrigation) of the effluent; wetlands application followed by disinfection and surface water discharge; and wetlands application followed by subsurface discharge.

Other Alternatives Presented in the PEIS

The following project alternatives were identified in feasibility studies conducted for the LaGrange County Sewer District and analyzed in this PEIS. Even though they are creditable technical alternatives, they were not selected as the preferred alternative.

Continued Use of On-Site Waste Disposal Systems (No Action Alternative): This alternative would not address the present public health concerns or the continued degradation of the County's surface and ground water.

Centralized Wastewater Collection and Treatment for all County Residents Using Conventional Wastewater Treatment: This alternative would provide wastewater collection and treatment service for all county residents. This option would use either gravity, or pressure sewers to convey wastewater to a centralized facility. Collection and conveyance alternatives that were analyzed for this option include: small diameter gravity systems; small diameter pressure systems using single connection effluent grinder pumps; and conventional gravity collector lines connected to pressure lines for conveyance to the treatment facility. Activated sludge process alternatives that were considered for this option included: oxidation ditches, and extended aeration.

Centralized Wastewater Collection and Treatment for All County Residents Except for Residents in Remote Locations Using Conventional Activated Sludge Waste Treatment Processes: This alternative involves providing water waste collection and treatment services for all of the County's residents except those located in isolated regions. This option would use the same collection and treatment technologies as the option providing wastewater treatment for the entire County. Cost savings over serving the entire county would be realized because of the high unit cost of serving remote residences.

ADDRESSES/FOR FURTHER INFORMATION CONTACT: For more information, contact or for transmittal of written comments send to: Paul Neumann, State Environmental Coordinator, USDA, Rural Development, RUS, 5975 Lakeside Blvd., Indianapolis, IN 46278, (219) 290–3109, and FAX (219) 290–3011. Copies of the final PEIS will be available for public inspection, during normal business hours at the following locations:

LaGrange Town Clerk, 107 S. High Street, LaGrange, IN 46761

Town of Topeka, Attn: Duane Bontrager, 101 Main Street, Topeka, IN 46571

Town of Shipshewana, Attn: Ruth Ann Downey, P.O. Box 486, 345 N. Morton Street, Shipshewana, IN 46565

Town of Wolcottville, Attn: Elizabeth Hodge, P.O. Box 325, 101 W. Race Street, Wolcottville, IN 46795.

The draft final PEIS will be distributed to various Federal, State, and local agencies, and elected officials.

Dated: May 13, 1996.

Wally Beyer,

Administrator.

[FR Doc. 96–13644 Filed 5–30–96; 8:45 am]

BILLING CODE 3410–15–P

COMMISSION ON CIVIL RIGHTS

Agenda and Notice of Public Meeting of the Georgia Advisory Committee

Notice is hereby given, pursuant to the provisions of the rules and regulations of the U.S. Commission on Civil Rights, that a meeting of the Georgia Advisory Committee to the Commission will convene at 3:00 p.m. and adjourn at 5:00 p.m. on Friday, June 21, 1996, at the Ponce de Leon branch, Atlanta-Fulton Public Library, 980 Ponce de Leon Avenue, NE, Atlanta, Georgia 30306. The purpose of the meeting is to meet with Joy Berry, Executive Director, Georgia Human Relations Commission; to discuss a civil rights conference proposal; to review the project on programs of the Atlanta Committee on the Olympic Games; and to discuss civil rights problems and/or progress in Georgia and the United States.

Persons desiring additional information, or planning a presentation to the Committee, should contact Committee Chairperson Elaine Alexander, 404–233–8414, or Bobby D. Doctor, Director of the Southern Regional Office, 404–730–2476 (TDD 404–730–2481). Hearing-impaired persons who will attend the meeting and require the services of a sign language interpreter should contact the Regional Office at least five (5) working days before the scheduled date of the meeting.

The meeting will be conducted pursuant to the provisions of the rules and regulations of the Commission.

Dated at Washington, DC, May 22, 1996.

Carol-Lee Hurley,

Chief, Regional Programs Coordination Unit.

[FR Doc. 96–13624 Filed 5–30–96; 8:45 am]

BILLING CODE 6335–01–P

DEPARTMENT OF COMMERCE

Submission For OMB Review; Comment Request

DOC has submitted to the Office of Management and Budget (OMB) for clearance the following proposal for collection of information under the provisions of the Paperwork Reduction Act (44 U.S.C. chapter 35).

Agency: Bureau of the Census.

Title: Survey of Environmental Products and Services.

Form Number(s): EPS–1(M), 2(M), 3(M), 1(S), 1(C).

Agency Approval Number: None.

Type of Request: New collection.

Burden: 20,000 hours.

Number of Respondents: 10,000.

Avg Hours Per Response: 2 hours.

Needs and Uses: Currently, there are no reliable data on the output and export of goods and services that control, reduce, and remediate pollution. Representatives of industry, state governments, and environmental organizations have called for the development of these data as they are critical to the implementation of the Environmental Technologies Exports Initiative, the Environmental Technology Initiative, the Clean Air Act, the Clean Water Act and other environmental statutes. Further, a study is necessary to meet the requirements of the 1990 Clean Air Act Amendment, the Exports Enhancement Act of 1988 and the Jobs Through Trade Expansion Act of 1988. The Census Bureau plans to conduct, on a test basis, a survey of manufacturing and service establishments to collect total value of shipments of goods and revenues for services in 1995 defined for environmental use. The survey will also ask for value of shipments and revenues for services which were exported. The survey will provide information on the size and scope of activity generated from environmental protection. The survey will also provide a benchmark measure of the extent of the environmental industry, its export potential, and the implication for employment in a potential growth industry. Government classification specialists will use the information to determine how industry and product classification systems can be refined and modified to improve the identification of products and services

considered for environmental use. Changes and modifications to detailed classifications will be introduced with the 1997 Economic Censuses. We expect to revise the survey for future data collections to incorporate improvements learned from this test.

Affected Public: Businesses or other for–profit.

Frequency: One–time test.

Respondent's Obligation: Mandatory.

OMB Desk Officer: Jerry Coffey, (202) 395–7314.

Copies of the above information collection proposal can be obtained by calling or writing Linda Engelmeier, Acting DOC Forms Clearance Officer, (202) 482–3272, Department of Commerce, room 5312, 14th and Constitution Avenue, NW, Washington, DC 20230.

Written comments and recommendations for the proposed information collection should be sent within 30 days of publication of this notice to Jerry Coffey, OMB Desk Officer, room 10201, New Executive Office Building, Washington, DC 20503.

Dated: May 24, 1996.

Linda Engelmeier,

Acting Departmental Forms Clearance Officer, Office of Management and Organization.

[FR Doc. 96–13620 Filed 5–30–96; 8:45 am]

BILLING CODE 3510–07–F

Bureau of the Census

Annual Survey of State and Local Government Finance

ACTION: Proposed agency information collection activity; comment request.

SUMMARY: The Department of Commerce, as part of its continuing effort to reduce paperwork and respondent burden, invites the general public and other Federal agencies to take this opportunity to comment on proposed and/or continuing information collections, as required by the Paperwork Reduction Act of 1995, Public Law 104–13 (44 U.S.C. 3506(c)(2)(A)).

DATES: Written comments must be submitted on or before July 30, 1996.

ADDRESSES: Direct all written comments to Linda Engelmeier, Acting Departmental Forms Clearance Officer, Department of Commerce, Room 5327, 14th and Constitution Avenue NW., Washington, DC 20230.

FOR FURTHER INFORMATION CONTACT: Requests for additional information or copies of the information collection instrument(s) and instructions should be directed to Henry S. Wulf, Bureau of the Census, Governments Division, Washington, DC 20233–6800, (301)–457–1523.

SUPPLEMENTARY INFORMATION:

I. Abstract

This annual survey provides state government finance data and estimates of local government revenue, expenditure, debt and assets by type of local government, nationally and within state areas. The data are used to calculate the gross domestic product (GDP), to monitor the government sector of the economy, and to formulate, develop, and review public policy.

The revenue category subdivides into the three parts of general revenue, utility and liquor store revenue and insurance trust revenue. Examples of general revenue are taxes, monies from other governments, non-utility charges and interest earnings. Utility charges and investment earnings are examples of other types of government income.

The statistics show expenditure classified by character and object (current operations, capital outlay, etc.) and by function (education, highways, police, welfare, and sanitation, for example). The indebtedness data include all long- and short-term (less than one year) credit obligations incurred in the name of government. Asset information—dominated generally by pension system assets—includes only cash and securities of governments, but excludes any other type of asset such as real property or fixed assets.

Included within this review request are the Forms F–5, F–5a, F–5L1, and F–5L2 from the Annual Survey of State Tax Collections. This survey was approved separately in the past under the OMB number 0067–0046. We are combining these two collections because the tax portion of the data will no longer be released separately. Although the data will be collected in the same manner by the Forms F–5 and F–5a, the data collected will be included as part of the annual survey releases.

II. Method of Collection

Canvass methodology consists of a questionnaire mailout/mail-back. Responses will be screened manually, then entered on a microcomputer. Other methods used to collect data and maximize response include central data collection, solicitation of printed reports in lieu of a completed questionnaire, and use of the Census Bureau's Federal Single Audit Clearinghouse.

III. Data

OMB Number: 0607–0585 (Forms F–5, F–5A, F–5L1, F–5–L2 were previously cleared under the OMB Number 0607–0046).

Form Number: F–5, F–5A, F–5L1, F–5–L2, F–11, F–12, F–13, F–21, F–22, F–25, F–28, F–29, F–32, F–42.

Type of Review: Regular.

Affected Public: State, local or tribal government.

Estimated Number of Respondents: 7,425.

Estimated Time Per Response: 2.8 hours.

Estimated Total Annual Burden Hours: 22,798 hours.

Estimated Total Annual Cost: The estimated cost to the respondents is $303,213.00. The estimated cost to the Federal Government is contained in the Surveys of Government Finance. In total, these cost about $3.2 million during FY 1996.

IV. Request for Comments

Comments are invited on: (a) Whether the proposed collection of information is necessary for the proper performance of the functions of the agency, including whether the information shall have practical utility; (b) the accuracy of the agency's estimate of the burden (including hours and cost) of the proposed collection of information; (c) ways to enhance the quality, utility, and clarity of the information to be collected; and (d) ways to minimize the burden of the collection of information on respondents, including through the use of automated collection techniques or other forms of information technology.

Comments submitted in response to this notice will be summarized and/or included in the request for OMB approval of this information collection; they also will become a matter of public record.

Dated: May 28, 1996.

Linda Engelmeier,

Acting Departmental Forms Clearance Officer, Office of Management and Organization.

[FR Doc. 96–13698 Filed 5–30–96; 8:45 am]

BILLING CODE 3510–07–P

Minority Business Development Agency

[Docket No. 960402097–6129–02]

RIN 0640–XX02

Revision of the Cost-Share Requirement and Addition of Bonus Points for Community-Based Organizations Applying To Operate Minority Business Development Centers (MBDC) in Designated Locations

AGENCY: Minority Business Development Agency, Commerce.

ACTION: Interim final policy request for comments.

SUMMARY: In order to leverage Federal resources together with those existing in communities, and to build local capacity to impact growth in the nation's minority business sector, MBDA is revising its Minority Business Development Center Competitive Application Package to increase the Cost-Share requirement from fifteen percent (15%) to forty percent (40%) and to give an additional ten (10) bonus points to the applications of community-based organizations in designated locations.

DATES: This interim policy is effective May 31, 1996. Comments on this interim policy must be submitted on or before July 1, 1996.

ADDRESSES: Comments should be sent to Mr. Paul R. Webber IV, Assistant Director for Operations, Minority Business Development Agency, U.S. Department of Commerce, Room 5073, 14th and Constitution Avenues NW., Washington D.C. 20230.

FOR FURTHER INFORMATION CONTACT: Mr. Paul Webber IV at (202) 482–1015.

SUPPLEMENTARY INFORMATION: Under Executive Order 11625, MBDA provides business development assistance to persons who are members of groups determined by MBDA to be socially or economically disadvantaged, and to business concerns owned and controlled by such individuals. To deliver this assistance, MBDA funds MBDCs which offer a full range of management and technical assistance services, coordinate public and private resources on behalf of clients, and serve as a conduit for information concerning business development.

MBDA selects applicants to operate its MBDCs through a competitive solicitation process. The guidelines for operation of an MBDC are set forth in a detailed Competitive Application Package (CAP). The funding instrument for the MBDCs is a cooperative agreement, which, in addition to the CAP and the competitive solicitation published in the Federal Register, sets forth the applicable requirements which must be met by an MBDC operator (collectively, the ''program guidelines'').

Under the program guidelines, the Department of Commerce currently funds up to 85% of the total budgeted cost of operating an MBDC on an annual basis. The MBDC operator is required to contribute at least 15% of the total project cost (the ''cost-share requirement''). Contributions which may be utilized in satisfying the cost-share requirement include cash contributions, non-cash applicant contributions, third party in-kind contributions and client fees.

Under the revised guidelines for the geographic service areas designated below, and for such additional geographic service areas as shall from time to time be added to this list, the Department will fund up to 60% of the total project cost. The operator will be required to contribute at least 40% of the total project cost in order to satisfy the cost-share requirement. In addition to the traditional sources of an MBDC's cost-share contribution, the 40% may be contributed by local, state and private sector organizations. It is anticipated that some organizations may apply jointly for an award to operate one of the designated centers. For administrative purposes, one organization must be designated as the recipient organization.

Pages 1–7 of the MBDC Competitive Application Package (CAP) address the scoring of applications. Currently, applicants are evaluated based upon a 100 point scoring system which addresses the capability of the applicant, the reasonableness of the applicant's proposed costs, the applicant's proposed strategies for accomplishing the program mission, and other selection criteria. This scoring system will be revised to add ten (10) bonus points to the applications of community-based organizations which have received a programmatically acceptable and responsive score. Each qualifying application will receive the full ten points. Community-based applicant organizations are those organizations currently located within the geographic service area designated in the solicitation for the award, and whose headquarters and/or principal place of business have been located within the geographic service area during the last five years. Where an applicant organization has been in existence for fewer than five years or has been present in the geographic service area for fewer than five years, the individual years of experience of the applicant organization's principals may be applied toward the requirement of five years of organization experience. The individual years of experience must have been acquired in the geographic service area which is the subject of the solicitation.

Issues concerning the interpretation of the foregoing requirements and the meanings of key terms shall be governed by the CAP, as amended.

MBDA recognizes that the substantially decreased level of funding for Agency programs and the instituting of a community-based emphasis on the selection of service providers may lead to the non-renewal of some awards upon the expiration of the current award term, yet prior to the completion of a full, three-year competitive cycle. It is important to note that under the Agency's existing program guidelines, the renewal of an award for the second and third budget years is expressly conditioned upon the availability of funding and shifts in Agency priorities.

Statement of Policy

In order to implement its revised program in support of the minority business sector, MBDA will henceforth increase the cost-share requirement for Business Development Center awards to forty percent (40%) and add ten bonus points to programmatically acceptable and responsive applications of community-based organizations in the following twenty-two locations:

Atlanta
Tampa
Cincinnati
New Orleans
Bronx
Newark/Jersey City
Las Vegas
San Francisco
Jacksonville
West Palm Beach
Brownsville
Oklahoma City
Brooklyn
Washington, D.C.
Los Angeles
Orlando
Chicago
Corpus Christi
Boston
Connecticut
Anaheim
Oxnard

Executive Order 12866

This policy revision was determined to be not significant for purposes of E.O. 12866.

Administrative Procedure Act

Since this notice of policy revision is a matter relating to public property,

loans, grants, benefits, or contracts under 5 U.S.C. 553(a)(2), the requirements of section 553 do not apply.

Regulatory Flexibility Act

The Regulatory Flexibility Act does not apply to this notice of policy change because the notice was not required to be promulgated as a proposed rule before issuance in final form by 5 U.S.C. § 553 or by any other law. As a result, neither an initial nor final Regulatory Analysis was required, and none has been prepared.

Paperwork Reduction Act

This notice involves a collection of information which has been approved by the Office of Management and Budget under control number 0640–0006.

Executive Order 12612

This policy statement does not contain policies with Federalism implications sufficient to warrant preparation of a Federalism assessment under Executive Order 12612.

Authority: 15 U.S.C. 1512 and Executive Order 11625.

Dated: May 24, 1996.

Elio E. Muller, Jr.,

Associate Director for Strategic Planning, Minority Business Development Agency.

[FR Doc. 96–13691 Filed 5–30–96; 8:45 am]

BILLING CODE 3510–21–P

National Oceanic and Atmospheric Administration

[I.D. 051796D]

North Pacific Fishery Management Council; Agenda Addition

AGENCY: National Marine Fisheries Service (NMFS), National Oceanic and Atmospheric Administration (NOAA), Commerce.

ACTION: Addition to meeting agenda.

SUMMARY: The agenda for the meeting of the North Pacific Fishery Management Council which is scheduled for June 11–16, 1996, in Portland, OR, was published on May 28, 1996. See **SUPPLEMENTARY INFORMATION** for an addition to the meeting agenda.

ADDRESSES: Portland Red Lion Hotel, 310 S.W. Lincoln, Portland, OR 97201.

Council address: North Pacific Fishery Management Council, 605 W. 4th Ave., Suite 306, Anchorage, AK 99501–2252.

FOR FURTHER INFORMATION CONTACT: Council staff, Phone: 907–271–2809.

SUPPLEMENTARY INFORMATION: The initial agenda published on May 28, 1996 (61 FR 13285). The following addition is to be included in the agenda for the Council meeting:

An initial review of a regulatory amendment to implement specific electronic reporting requirements for onshore and offshore processors will be added to the previously published agenda.

Special Accommodations

These meetings are physically accessible to people with disabilities. Requests for sign language interpretation or other auxiliary aids should be directed to Helen Allen, 907–271–2809, at least 5 working days prior to the meeting date.

Dated: May 28, 1996.

Richard W. Surdi,

Acting Director, Office of Fisheries Conservation and Management, National Marine Fisheries Service

[FR Doc. 96–13703 Filed 5–30–96; 8:45 am]

BILLING CODE 3510–22–P

National Environmental Satellite, Data, and Information Service Transition From GOES TAP/GOES Fax Transmission of Satellite Imagery to Alternative Methods of Delivery

AGENCIES: National Environmental Satellite, Data, and Information Service (NESDIS), National Weather Service (NWS), National Oceanic and Atmospheric Administration (NOAA), Department of Commerce.

ACTION: Notice.

SUMMARY: This notice publishes the NESDIS and the NWS plan to transition from the current GOES-Tap/GOES-Fax (telephone-based) analog service to new digital-data transmission modes including NOAAPORT point-to-multipoint broadcast and the Internet. No changes will occur without several advance notifications. A minimum 6-month notification is planned for the user community.

ADDRESSES: Information concerning this Notice is available upon request. GOES-Tap users can send inquires to NESDIS, Satellite Services Division, 5200 Auth Road, Room 607, Camp Springs, Maryland 20748.

For GOES-Fax users, requests for information should be sent to the NWS, Telecommunications and Dissemination Branch, 1325 East-West Highway, Suite 17444, Silver Spring, Maryland 20910.

FOR FURTHER INFORMATION CONTACT: John Paquette (GOES-Tap) at 301–763–8051, e-mail at jpaquette@ssd.wwb.noaa.gov or Herb Hawkins (GOES-FAX) at 301–713–0425 or e-mail at hhawkins@smtpgate.ssmc.noaa.gov.

SUPPLEMENTARY INFORMATION: Established in the mid 1970's, the Geostationary Operational Environmental Satellite (GOES) Telecommunications Access Program (GOES-Tap) has provided Weather Service Forecast Offices (WSFO) with near real-time, high quality analog environmental satellite imagery from geostationary and polar-orbiting satellites. Many other Federal Government and private weather users also access this satellite imagery via regional Satellite Field Distribution Facilities directly as GOES-Tap customers or are connected to a WSFO as a secondary GOES-Fax customer.

In support of the NWS modernization, NESDIS plans to meet new expanded NWS operational data requirements by transitioning from the analog GOES-Tap to a digital GOES data relay through a commercial satellite. This satellite point-to-multipoint broadcast is referred to as NOAAPORT and will cover the United States, including Hawaii and Alaska.

Scheduled for full deployment near the end of the decade, NOAAPORT will provide users with real-time transmission of high resolution digital sectorized data from both GOES and other satellite platforms. Currently, NOAA is also examining additional means of digital satellite data delivery including the Internet.

NOAA plans to decommission GOES-Tap/GOES-Fax during calendar years 1997 and 1998. These planning dates could be moved up. All known GOES-Tap/GOES-Fax users will be updated on specific decommissioning dates at least 6 months prior to termination of these services. GOES-Tap and GOES-Fax customers are encouraged to begin making preparations for this transition.

Dated: May 24, 1996.

Robert S. Winokur,

Assistant Administrator for Satellite and Information Services.

[FR Doc. 96–13700 Filed 5–30–96; 8:45 am]

BILLING CODE 3510–12–M

[I.D. 052196C]

Marine Mammals

AGENCY: National Marine Fisheries Service (NMFS), National Oceanic and Atmospheric Administration (NOAA), Commerce.

ACTION: Receipt of application to modify permit no. 926 (P562).

SUMMARY: Notice is hereby given that Dr. Robin Baird, Marine Mammal Research

Group, victoria, B.C., Canada, V8P 5L5, has requested a modification to Permit No. 926.

DATES: Written comments must be received on or before July 1, 1996.

ADDRESSES: The modification request and related documents are available for review upon written request or by appointment in the following office(s):

Permits Division, Office of Protected Resources, NMFS, 1315 East-West Highway, Room 13130, Silver Spring, MD 20910 (301/713–2289); and

Director, Northwest Region, National Marine Fisheries Service, 7600 Sand Point Way, NE, BIN C15700, Bldg. 1, Seattle, WA (206/526–6150).

Written data or views, or requests for a public hearing on this request should be submitted to the Chief, Permits Division, F/PR1, Office of Protected Resources, National Marine Fisheries Service, Silver Spring, MD 20910. Those individuals requesting a hearing should set forth the specific reasons why a hearing on this particular request would be appropriate.

FOR FURTHER INFORMATION CONTACT: Jeannie Drevenak, 301/713–2289.

SUPPLEMENTARY INFORMATION: The subject modification is requested under the authority of the Marine Mammal Protection Act of 1972, as amended (16 U.S.C. 1361 *et seq.*), and the Regulations Governing the Taking and Importing of Marine Mammals (50 CFR part 216).

The Permit Holder is currently authority to take (i.e., harass) up to 300 killer whales (*Orcinus orca*) annually, up to 25 of which may be radio tagged via suction cups annually, in waters off Washington state, over a five year period. The purpose of the research is to study killer whale behavior and ecology.

The Holder is now requesting that the Permit be modified to authorize the harassment and suction cup radio tagging Dall's porpoise (*Phocoenoides dalli*), in order to study that species' diving behavior. Up to 100 animals may be radio tagged annually. Up to 200 non-target animals may be inadvertently harassed annually during tagging activities. Activities will be undertaken in the waters of Juan de Fuca Strait, Haro Strait, Boundary Pass, Georgia Strait, and the waters surrounding the San Juan Islands.

Concurrent with the publication of this notice in the Federal Register, NMFS is forwarding copies of this application to the Marine Mammal Commission and its Committee of Scientific Advisors.

Dated: May 22, 1996.

Ann D. Terbush,

Chief, Permits and Documentation Division, Office of Protected Resources, National Marine Fisheries Service.

[FR Doc. 96–13605 Filed 5–30–96; 8:45 am]

BILLING CODE 3510–22–F

[I.D. 052296B]

Marine Mammals; Permit No. 778 (P772#59)

AGENCY: National Marine Fisheries Service (NMFS), National Oceanic and Atmospheric Administration (NOAA), Commerce.

ACTION: Issuance of modification.

SUMMARY: Notice is hereby given that on April 29, 1996, permit no. 778, issued to the National Marine Fisheries Service, Southwest Fisheries Science Center, La Jolla, CA 92038, was modified.

ADDRESSES: The modification and related documents are available for review upon written request or by appointment in the following offices:

Permits Division, Office of Protected Resources, NMFS, 1315 East-West Highway, Room 13130 Silver Spring, MD 20910 (301/712–2289);

Director, Southwest Region, National Marine Fisheries Service, 501 West Ocean Boulevard, Suite 4200, Long Beach, CA 90802–4213 (310/980–4001);

Coordinator, Pacific Area Office, Southwest Region, National Marine Fisheries Service, 2570 Dole Street, Room 106, Honolulu, HI 9682202396 (808/973–2987).

SUPPLEMENTARY INFORMATION: The subject modification has been issued under the authority of the Marine Mammal Protection Act of 1972, as amended (16 U.S.C. 1361 *et seq.*), the provisions of paragraphs (d) and (e) of § 216.33 of the regulations of the governing the taking and importing (50 CFR part 216), the Endangered Species Act of 1973, as amended (ESA; 16 U.S.C. 1531 *et seq.*), and the provisions of § 222.25 of the regulations governing the taking, importing, and exporting of endangered fish and wildlife (50 CFR part 222).

Permit 778 authorizes the conduct of several research/enhancement activities on Hawaiian monk seals (*Monachus schauinslandi*). The permit has been modified to extend the duration of the permit through October 31, 1996.

Issuance of this permit as required by the ESA was based on a finding that such permit: (1) Was applied for in good faith; (2) will not operate to the disadvantage of the endangered species which is the subject of this permit; and (3) is consistent with the purposes and policies set forth in section 2 of the ESA.

Dated: May 23, 1996.

Ann D. Terbush,

Chief, Permits and Documentation Division, Office of Protected Resources, National Marine Fisheries Service.

[FR Doc. 96–13606 Filed 5–30–96; 8:45 am]

BILLING CODE 3510–22–F

COMMITTEE FOR PURCHASE FROM PEOPLE WHO ARE BLIND OR SEVERELY DISABLED

Procurement List; Additions

AGENCY: Committee for Purchase From People Who Are Blind or Severely Disabled.

ACTION: Additions to the Procurement List.

SUMMARY: This action adds to the Procurement List services to be furnished by nonprofit agencies employing persons who are blind or have other severe disabilities.

EFFECTIVE DATE: July 1, 1996.

ADDRESSES: Committee for Purchase From People Who Are Blind or Severely Disabled, Crystal Square 3, Suite 403, 1735 Jefferson Davis Highway, Arlington, Virginia 22202–3461.

FOR FURTHER INFORMATION CONTACT: Beverly Milkman (703) 603–7740.

SUPPLEMENTARY INFORMATION: On April 5, 1996, the Committee for Purchase From People Who Are Blind or Severely Disabled published notice (61 FR 15225) of proposed additions to the Procurement List. After consideration of the material presented to it concerning capability of qualified nonprofit agencies to provide the service and impact of the additions on the current or most recent contractors, the Committee has determined that the services listed below are suitable for procurement by the Federal Government under 41 U.S.C. 46–48c and 41 CFR 51–2.4. I certify that the following action will not have a significant impact on a substantial number of small entities. The major factors considered for this certification were:

1. The action will not result in any additional reporting, recordkeeping or other compliance requirements for small entities other than the small organizations that will furnish the services to the Government.

2. The action will not have a severe economic impact on current contractors for the services.

3. The action will result in authorizing small entities to furnish the services to the Government.

4. There are no known regulatory alternatives which would accomplish the objectives of the Javits-Wagner-O'Day Act (41 U.S.C. 46–48c) in connection with the services proposed for addition to the Procurement List.

Accordingly, the following services are hereby added to the Procurement List:

Administrative Services

Department of Energy, Forrestal Building, Washington, DC.

Switchboard Operation

Department of Veterans Affairs Medical Center, Syracuse, New York.

This action does not affect current contracts awarded prior to the effective date of this addition or options that may be exercised under those contracts.

Beverly L. Milkman,

Executive Director.

[FR Doc. 96–13709 Filed 5–30–96; 8:45 am]

BILLING CODE 6353–01–P

Procurement List; Proposed Additions and Deletions

AGENCY: Committee for Purchase From People Who Are Blind or Severely Disabled.

ACTION: Proposed additions to and deletions from procurement list.

SUMMARY: The Committee has received proposals to add to the Procurement List commodities and a service to be furnished by nonprofit agencies employing persons who are blind or have other severe disabilities, and to delete commodities previously furnished by such agencies.

COMMENTS MUST BE RECEIVED ON OR BEFORE: July 1, 1996.

ADDRESS: Committee for Purchase From People Who Are Blind or Severely Disabled, Crystal Square 3, Suite 403, 1735 Jefferson Davis Highway, Arlington, Virginia 22202–3461.

FOR FURTHER INFORMATION CONTACT: Beverly Milkman (703) 603–7740.

SUPPLEMENTARY INFORMATION: This notice is published pursuant to 41 U.S.C. 47(a)(2) and 41 CFR 51–2.3. Its purpose is to provide interested persons an opportunity to submit comments on the possible impact of the proposed actions.

Addition:

If the Committee approves the proposed addition, all entities of the Federal Government (except as otherwise indicated) will be required to procure the commodities and service listed below from nonprofit agencies employing persons who are blind or have other severe disabilities. I certify that the following action will not have a significant impact on a substantial number of small entities. The major factors considered for this certification were:

1. The action will not result in any additional reporting, recordkeeping or other compliance requirements for small entities other than the small organizations that will furnish the commodities and service to the Government.

2. The action does not appear to have a severe economic impact on current contractors for the commodities and service.

3. The action will result in authorizing small entities to furnish the commodities and service to the Government.

4. There are no known regulatory alternatives which would accomplish the objectives of the Javits-Wagner-O'Day Act (41 U.S.C. 46–48c) in connection with the commodities and service proposed for addition to the Procurement List.

Comments on this certification are invited. Commenters should identify the statement(s) underlying the certification on which they are providing additional information.

The following commodities and service have been proposed for addition to Procurement List for production by the nonprofit agencies listed:

Commodities

Stamp, Custom, Pre-inked
7520–01–381–8057
7520–01–381–8075
7520–01–381–8054
7520–01–381–8037
7520–01–381–8074
7520–01–381–8063
7520–01–352–7312
7520–01–368–7774
7520–01–381–8012
7520–01–381–8027
7520–01–419–6746
7520–01–419–6743
7520–01–419–6744
7520–01–381–7995
7520–01–381–7993
7520–01–381–8017
7520–01–357–6847
7520–01–357–6846
7520–01–419–6744
7510–01–381–8070
7510–01–381–8072
7510–01–381–8041
7510–01–381–8032
7510–01–368–3504
7510–01–381–8062
(Requirements for the U.S. Postal Service) NPA: The Lighthouse for the Blind, Inc., Seattle, Washington

Kit, Pre-Inked Stamps, 7520–00–NIB–1090 thru –1108, (Requirements for the U.S. Postal Service), NPA: The Lighthouse for the Blind, Inc., Seattle, Washington

Service

Tray Delivery Service, Department of Veterans Affairs Medical Center, 3601 South 6th Avenue, Tucson, Arizona, NPA: The Centers for Habilitation/TCH, Tempe, Arizona

Deletions

I certify that the following action will not have a significant impact on a substantial number of small entities. The major factors considered for this certification were:

1. The action will not result in any additional reporting, recordkeeping or other compliance requirements for small entities.

2. The action does not appear to have a severe economic impact on future contractors for the commodities.

3. The action will result in authorizing small entities to furnish the commodities to the Government.

4. There are no known regulatory alternatives which would accomplish the objectives of the Javits-Wagner-O'Day Act (41 U.S.C. 46–48c) in connection with the commodities proposed for deletion from the Procurement List.

The following commodities have been proposed for deletion from the Procurement List:

Paper, Looseleaf, Ruled

7530–00–286–4333
7530–00–198–6265
7530–00–286–4334
7530–00–286–4335
7530–00–286–4331
7530–00–286–5779
7530–00–286–5781
7530–00–286–5778
7530–00–286–5780
7530–00–286–5777

Card Set, Guide, File

7530–00–574–7172
7530–00–861–1270

Tape, Paper, Computing Machine

7530–00–286–9055
7530–00–286–9052

Bag, Cloth

8105–00–282–8183

Folder, File

7530–00–926–8975
7530–00–531–7809
7530–00–285–5879

Tape, Pressure-Sensitive Adhesive

7510–00–074–4946

Binder, Looseleaf

7510–00–582–3807
7510–00–281–4315

Portfolio

7510–00–579–8554

Envelope, Transparent

7510–00–782–6276

Strap, Webbing, Waist, LC–1

8465–00–269–0481

Liner, Coat, Cold Weather

8415–01–062–0679
8415–00–782–2889
8415–00–782–2888
8415–00–782–2887
8415–00–782–2886
8415–00–782–2890

Liner, Trousers, Cold Weather

8415–01–180–0370
8415–01–180–0371
8415–01–180–0372
8415–01–180–0373
8415–01–180–0374
8415–01–180–0375

Beverly L. Milkman,

Executive Director.

[FR Doc. 96–13710 Filed 5–30–96; 8:45 am]

BILLING CODE 6353–01–P

DEPARTMENT OF EDUCATION

[CFDA No. 84.133A–-7]

Office of Special Education and Rehabilitative Services National Institute on Disability and Rehabilitation Research

Notice Inviting Applications for a New Award Under the Research and Demonstration Projects Program for Fiscal Years 1996–1997.

Purpose of Program: The Research and Demonstration Projects (R&D) Program supports discrete research, demonstration, training, and related projects to develop methods, procedures, and technology that maximize the full inclusion and integration into society, independent living, employment, family support, and economic and social self-sufficiency of individuals with disabilities, especially those with the most severe disabilities.

Eligible Applicants: Parties eligible to apply for grants under this program are public and private nonprofit and for-profit agencies and organizations, including institutions of higher education and Indian tribes and tribal organizations.

Deadline for Transmittal of Applications: July 15, 1996.

Application Available: June 3, 1996.

Available Funds: $250,000.

Estimated Average Size of Award per Year: $250,000.

Estimated Number of Awards: 1.

Project Period: 36 months.

Applicable Regulations: (a) The Education Department General Administrative Regulations (EDGAR), 34 CFR Parts 74, 75, 77, 80, 81, 82, 85, 86; and (b) the regulations for this program in 34 CFR Parts 350 and 351.

Note: The estimate of funding level and awards in this notice do not bind the Department of Education to a specific level of funding or number of grants.

This notice supports the National Education Goal that calls for all Americans to possess the knowledge and skills necessary to compete in a global economy and exercise the rights and responsibilities of citizenship.

Priorities

Under 34 CFR 75.105(b)(2) (v) and (c)(3) and Section 204(a) of the Rehabilitation Act of 1973, as amended, the Secretary gives an absolute preference to applications that meet the following priority. The Secretary funds under this competition only applications that meet the absolute priority:

Absolute Priority—Unserved or Underserved Populations

Research, demonstration, training, and related projects that hold promise of increasing knowledge and improving the rehabilitation of individuals, particularly those with the most severe disabilities and those who are members of populations that are unserved or underserved by programs under the Rehabilitation Act.

Invitational Priority

Within the absolute priority, the Secretary is particularly interested in applications that address the following invitational priority. However, under 34 CFR 75.105(c)(1) an application that meets an invitational priority does not receive competitive or absolute preference over other applications:

NIDRR has observed that while women constitute most of the disability population, little information or quantitative data is available relative to circumstances and needs of women with disabilities. The information that does exist suggests that women with disabilities in America confront problems that differ in important respects from those of their nondisabled female peers as well as those of men with disabilities. While NIDRR currently supports projects to address the needs of other underserved populations such as persons with disabilities from minority backgrounds and American Indian individuals with disabilities, NIDRR does not currently support a focused research effort to address critical issues unique to women with disabilities.

In 1995, NIDRR convened a focus group of women with disabilities, service providers, and researchers to discuss research gaps and opportunities. The following topics emerged as critical areas to disabled women: economic and employment status; prevalence of violence and abuse; access to appropriate health care; and opportunities for disabled girls and young women to develop independence and leadership skills. The Secretary invites applications to undertake research projects that address these topics, including the identification of intervention strategies that can be addressed through research.

Research projects might propose to address one or more of the following research needs: analysis of the income status of disabled women; documentation of employment status and identification of employment barriers; design and testing of leadership development models; and an analysis of the existing data about violence and abuse toward women with disabilities.

The Secretary is also interested in supporting projects that study the need for and feasibility of a comprehensive research effort on the unique problems of women with disabilities, and develop an agenda for future research.

For Applications Contact: William H. Whalen, U.S. Department of Education, 600 Independence Avenue SW., Switzer Building, Room 3411, Washington, D.C. 20202. Telephone: (202) 205–9141. Individuals who use a telecommunications device for the deaf (TDD) may call the TDD number at (202) 205–8887.

For Further Information Contact: David Esquith, U.S. Department of Education, 600 Independence Avenue SW., Switzer Building, Room 3424, Washington, D.C. 20202. Telephone: (202) 205–8801. Individuals who use a telecommunications device for the deaf (TDD) may call the TDD number at (202) 205–8133. Internet: David Esquith@ed.gov

Information about the Department's funding opportunities, including copies of application notices for discretionary grant competitions, can be viewed on the Department's electronic bulletin board (ED Board), telephone (202) 260–9950; on the Internet Gopher Server at GOPHER.ED.GOV (under Announcements, Bulletins, and Press Releases); or on the World Wide Web at http://www.ed.gov/money.html

However, the official application notice for a discretionary grant competition is the notice published in the Federal Register.

Program Authority: 29 U.S.C. 761a and 762.

Dated: May 24, 1996.

Judith E. Heumann,

Assistant Secretary for Special Education and Rehabilitative Services.

[FR Doc. 96–13704 Filed 5–30–96; 8:45 am]

BILLING CODE 4000–01–P

DEPARTMENT OF ENERGY

Office of Fossil Energy

National Petroleum Council; Notice of Open Meeting

Pursuant to the provisions of the Federal Advisory Committee Act (Pub. L. 92–463, 86 Stat. 770), notice is hereby given of the following meeting:

Name: National Petroleum Council (NPC).

Date and Time: Friday, June 21,1996 at 9:00 a.m.

Place: ANA Hotel, Grand Ballroom, 2401 M Street NW., Washington, D.C.

Contact: Margie D. Biggerstaff, U.S. Department of Energy, Office of Fossil Energy (FE–5), Washington, D.C. 20585, Telephone: 202/586–3867.

Purpose: To provide advice, information, and recommendations to the Secretary of Energy on matters relating to oil and gas or the oil and gas industry.

Tentative Agenda

—Call to order and introductory remarks by H. Laurance Fuller, Chair of the NPC.
—Remarks by the Honorable Hazel R. O'Leary, Secretary of Energy.
—Discussion of Plans and Progress of Interagency Working Group.
—Administrative matters.
—Discussion of any other business properly brought before the NPC.
—Public comment (10-minute rule).
—Adjournment.

Public Participation: The meeting is open to the public. The chairperson of the Council is empowered to conduct the meeting in a fashion that will facilitate the orderly conduct of business. Any member of the public who wishes to file a written statement with the Council will be permitted to do so, either before or after the meeting. Members of the public who wish to make oral statements pertaining to agenda items should contact Margie D. Biggerstaff at the address or telephone number listed above. Requests must be received at least five days prior to the meeting and reasonable provision will be made to include the presentation on the agenda.

Transcripts: Available for public review and copying at the Public Reading Room, Room IE–190, Forrestal Building, 1000 Independence Avenue SW., Washington, D.C., between 9:00 a.m. and 4:00 p.m., Monday through Friday, except Federal holidays.

Issued at Washington, D.C., on May 24, 1996.

Rachel M. Samuel,

Acting Deputy Advisory Committee Management Officer

[FR Doc. 96–13684 Filed 5–30–96; 8:45 am]

BILLING CODE 6450–01–P

Federal Energy Regulatory Commission

[Docket No. QF88–218–004]

Burney Forest Products, a Joint Venture; Notice of Amendment to Filing

May 24, 1996.

On May 23, 1996, Burney Forest Products, a Joint Venture tendered for filing an amendment to its April 30, 1996, filing in this docket.

The amendment pertains to the ownership structure of the small power production facility. No determination has been made that the submittal constitutes a complete filing.

Any person desiring to be heard or objecting to the granting of qualifying status should file a motion to intervene or protest with the Federal Energy Regulatory Commission, 888 First Street, NE., Washington, DC 20426, in accordance with rules 211 and 214 of the Commission's Rules of Practice and Procedure. All such motions or protests must be filed by June 13, 1996, and must be served on the applicant. Protests will be considered by the Commission in determining the appropriate action to be taken but will not serve to make protestants parties to the proceeding. Any person wishing to become a party must file a petition to intervene. Copies of this filing are on file with the Commission and are available for public inspection.

Lois D. Cashell,

Secretary.

[FR Doc. 96–13631 Filed 5–30–96; 8:45 am]

BILLING CODE 6717–01–M

[Docket No. ER96–1121–000]

Duke/Louis Dreyfus Energy Services (New England) L.L.C.; Notice of Issuance of Order

May 28, 1996.

On February 20, 1996, Duke/Louis Dreyfus Energy Services (New England) L.L.C. (Duke/Dreyfus-NE) filed an application for authorization to sell power at market-based rates, and for certain waivers and authorizations. In particular, Duke/Dreyfus-NE requested that the Commission grant blanket approval under 18 CFR Part 34 of all future issuances of securities and assumptions of liabilities by Duke/Dreyfus-NE. On May 16, 1996, the Commission issued an Order Conditionally Accepting for Filing Proposed Market-Based Rates and Report of Change in Status (Order), in the above-docketed proceeding.

The Commission's May 16, 1996 Order granted the request for blanket approval under Part 34, subject to the conditions found in Ordering Paragraphs (C), (D), and (F):

(C) Within 30 days of the date of this order, any person desiring to be heard or to protest the Commission's blanket approval of issuances of securities or assumptions of liabilities by Duke/Dreyfus-NE should file a motion to intervene or protest with the Federal Energy Regulatory Commission, 888 First Street, NE., Washington, DC 20426, in accordance with Rules 211 and 214 of the Commission's Rules of Practice and Procedure, 18 CFR 385.211 and 385.214.

(D) Absent a request to be heard within the period set forth in Ordering Paragraph (C) above, Duke/Dreyfus-NE is hereby authorized to issue securities and to assume obligations or liabilities as guarantor, endorser, surety or otherwise in respect of any security of another person; provided that such issue or assumption is for some lawful object within the corporate purposes of the applicant, compatible with the public interest, and reasonably necessary or appropriate for such purposes.

(F) The Commission reserves the right to modify this order to require a further showing that neither public nor private interests will be adversely affected by continued Commission approval of Duke/Dreyfus-NE's issuances of securities or assumptions of liabilities * * *.

Notice is hereby given that the deadline for filing motions to intervene or protests, as set forth above, is June 17, 1996.

Copies of the full text of the Order are available from the Commission's Public Reference Branch, 888 First Street, NE., Washington, DC 20426.

Lois D. Cashell,

Secretary.

[FR Doc. 96–13671 Filed 5–30–96; 8:45 am]

BILLING CODE 6717–01–M

[Docket No. CP96–532–000]

Equitrans, L.P. and Equitrans, Inc.; Notice of Petition

May 24, 1996.

Take notice that on May 22, 1996, Equitrans, L.P. and Equitrans, Inc.

(Applicants), both at 3500 Park Lane, Pittsburgh, Pennsylvania, 15275–1102, filed in a joint application under Sections 7 (c) and (b) of the Natural Gas Act, for authority to transfer facilities and services. Equitrans, L.P. requests a certificate authorizing it to acquire the facilities and perform the services of Equitrans, Inc. and to transport and sell natural gas for resale in interstate commerce in the same manner as conducted by Equitrans, Inc. Equitrans, Inc. requests companion authority to transfer all of its jurisdictional facilities, operations, and services to Equitrans, L.P. In addition, Equitrans, L.P. requests that it be substituted for Equitrans, Inc. in all pending proceedings in which Equitrans, Inc. is a party, all as more fully set forth in the Application. The Applicants request that authorization be made effective as of November 28, 1995.

Applicants state that on November 15, 1995, a Partnership Agreement formed Equitrans, L.P. The partnership is comprised of a general partner, ET Blue Grass Company, a subsidiary of ERI Investments, Inc., and a limited partner, Equitable Resources, Inc. Equitrans, Inc. seeks authority under Section 7(b) to transfer its jurisdictional facilities and operations to Equitrans, L.P. Equitrans, L.P. will adopt the tariff of Equitrans, Inc.

Applicants state that the sole purpose of their Application is to restructure the Equitrans, Inc. system operations as a natural gas company into the partnership of Equitrans, L.P.

Any person desiring to be heard or to make any protest with reference to this application should, on or before June 14, 1996, file with the Federal Energy Regulatory Commission, 888 First Street, N.E., Washington D.C. 20426, a motion to intervene or protest in accordance with the requirements of the Commission's Rules of Practice and Procedure (18 CFR 385.211 or 385.214) and the regulations under the NGA (18 CFR 157.10). All protests filed with the Commission will be considered by it in determining the approriate action to be taken but will not serve to make the protestants parties to the proceeding. Any person wishing to become a party to a proceeding or to participate as a party in any hearing therein must file a petition to intervene in accordance with the Commission's Rules.

Take further notice that pursuant to the authority contained in and subject to jurisdiction conferred upon the Federal Energy Regulatory Commission by Section 7 and Section 15 of the Natural Gas Act and the Commission's Rules of Practice and Procedure, a hearing will be held without further notice before the Commission or its designee on this application if no motion to intervene is filed within the time required herein, if the Commission on its own review of the matter finds that a grant of the certificate is required by the public convenience and necessity. If a motion for leave to intervene is timely filed, or if the Commission on its own motion believes that a formal hearing is required, further notice of such hearing will be duly given.

Under the procedure herein provided for, unless otherwise advised, it will be unnecessary for applicant to appear or be represented at the hearing.

Lois D. Cashell,

Secretary.

[FR Doc. 96–13634 Filed 5–30–96; 8:45 am]

BILLING CODE 6717–01–M

[Docket No. CP96–530–000]

Great Lakes Gas Transmission Limited Partnership; Notice of Request Under Blanket Authorization

May 24, 1996.

Take notice that on May 21, 1996, Great Lakes Limited Partnership (Great Lakes), One Woodward Avenue, Suite 1600, Detroit, Michigan, 48226, filed in Docket No. CP96–530–000 a request pursuant to Sections 157.205, and 157.211 of the Commission's Regulations under the Natural Gas Act (18 CFR 157.205, and 157.211) for approval to construct and operate a tap to serve its Boyne City-Petoskey meter station (station), located in Charlesvoix County, Michigan, under the blanket certificate issued in Docket No. CP90–2053–000, pursuant to Section 7(c) of the Natural Gas Act (NGA), all as more fully set forth in the request which is on file with the Commission and open to public inspection.

Great Lakes states that it will not provide any additional transportation service in connection with the proposed tap. Great Lakes indicates that the tap is designed to provide additional security and reliability for existing service utilizing the station. It is asserted that the proposed tap is complementary to Great Lakes' Security Loop I Project.

Any person or the Commission's Staff may, within 45 days of the issuance of the instant notice by the Commission, file pursuant to Rule 214 of the Commission's Rules of Practice and Procedure (18 CFR 385.214), a motion to intervene and pursuant to Section 157.205 of the regulations under the Natural Gas Act (18 CFR 157.205), a protest to the request. If no protest is filed within the time allowed therefor, the proposed activities shall be deemed to be authorized effective the day after the time allowed for filing a protest. If a protest is filed and not withdrawn 30 days after the time allowed for filing a protest, the instant request shall be treated as an application for authorization pursuant to Section 7 of the Natural Gas Act.

Lois D. Cashell,

Secretary.

[FR Doc. 96–13633 Filed 5–30–96; 8:45 am]

BILLING CODE 6717–01–M

[Docket No. PR96–6–000]

Gulf States Pipeline Corporation; Notice of Petition for Rate Approval

May 24, 1996.

Take notice that on May 1, 1996, as corrected on May 10, 1996, Gulf States Pipeline Corporation (Gulf States) filed pursuant to Section 284.123(b)(2) of the Commission's Regulations, a petition for rate approval requesting that the Commisison approve as fair and equitable a system-wide interruptible transportation rate of $0.2637 per MMBtu, a firm reservation rate of $4.6360 per MMBtu, and a firm commodity rate of $0.1112 per MMBtu for transportation services performed under Section 311(a)(2) of the Natural Gas Policy Act of 1978.

Gulf States states that it is an intrastate pipeline within the meaning of Section 2(16) of the NGPA and it owns and operates an intrastate pipeline system in the State of Louisiana. Gulf States proposes an effective date of May 1, 1996.

Pursuant to Section 284.123(b)(2)(ii) of the Commission's Regulations, if the Commission does not act within 150 days of the filing date, the rates will be deemed to be fair and equitable and not in excess of an amount which interstate pipelines would be permitted to charge for similar transportation services. The Commission may, prior to the expiration of the 150-day period, extend the time for action or institute a proceeding to afford parties an opportunity for written comments and for the oral presentation of views, data, and arguments.

Any person desiring to participate in this rate proceeding must file a motion to intervene in accordance with Sections 385.211 and 385.214 of the Commission's Rules of Practice and Procedures. All motions must be filed with the Secretary of the Commission on or before June 10, 1996. Protests will be considered by the Commission in determining the appropriate action to be taken, but will not serve to make protestants parties to the proceeding. Any person wishing to become a party must file a motion to intervene. Copies

of this filing are on file with the Commission and are available for public inspection in the Public Reference Room.

Lois D. Cashell,

Secretary.

[FR Doc. 96–13638 Filed 5–30–96; 8:45 am]

BILLING CODE 6717–01–M

[Docket No. ER96–1867–000]

Kansas City Power & Light Company; Notice of Filing

May 24, 1996.

Take notice that on May 17, 1996, Kansas City Power & Light Company filed a transmission tariff in compliance with the Commission's Final Rule in Docket No. RM95–8–000.

Any person desiring to be heard or to protest said filing should file a motion to intervene or protest with the Federal Energy Regulatory Commission, 888 First Street, N.E., Washington, D.C. 20426, in accordance with Rules 211 and 214 of the Commission's Rules of Practice and Procedure (18 CFR 385.211 and 18 CFR 385.214). All such motions or protests should be filed on or before June 3, 1996. Protests will be considered by the Commission in determining the appropriate action to be taken, but will not serve to make protestants parties to the proceeding. Any person wishing to become a party must file a motion to intervene. Copies of this filing are on file with the Commission and are available for public inspection.

Lois D. Cashell,

Secretary.

[FR Doc. 96–13630 Filed 5–30–96; 8:45 am]

BILLING CODE 6717–01–M

[Docket No. RP96–244–000]

Koch Gateway Pipeline Company; Notice of Proposed Changes in FERC Gas Tariff

May 24, 1996.

Take notice that on May 22, 1996, Koch Gateway Pipeline Company (Koch Gateway) tendered for filing as part of its FERC Gas Tariff, Fifth Revised Volume No. 1, the tariff sheets listed on the Appendix attached to the filing, with a proposed effective date of June 22, 1996.

Koch Gateway states that this filing is submitted as an application pursuant to Section 4 of the Natural Gas Act, 15 U.S.C. 717c (1988), and Part 154 of the Rules and Regulations of the Commission.

Koch Gateway also states that the tariff sheets are being submitted to replace Koch's current Section 30 of its tariff which explains Koch's right of first refusal process. This proposed tariff section provides a more efficient timeframe in which Koch's right of first refusal process will be completed while clarifying the necessary steps in this process.

Any person desiring to be heard or to protest said filing should file a motion to intervene or protest with the Federal Energy Regulatory Commission, 888 First Street, N.E., Washington, DC 20426, in accordance with Sections 385.214 and 385.211 of the Commission's regulations. All such motions or protest must be filed as provided in Section 154.210 of the Commission's Regulations. Protests will be considered by the Commission in determining appropriate action to be taken, but will not serve to make protestants parties to the proceedings. Any person wishing to become a party must file a motion to intervene. Copies of this filing are on file with the Commission and are available for public inspection.

Lois D. Cashell,

Secretary.

[FR Doc. 96–13642 Filed 5–30–96; 8:45 am]

BILLING CODE 6717–01–M

[Docket Nos. RP94–367–008 and RP95–31–015, et al.]

National Fuel Gas Supply Corporation; Notice of Tariff Filing

May 24, 1996.

Take notice that on May 21, 1996, National Fuel Gas Supply Corporation (National) tendered for filing as part of its FERC Gas Tariff, Third Revised Volume No. 1, the following tariff sheets proposed to be effective April 1, 1996:

Sub. Fourth Revised Sheet No. 17
Sub. First Revised Sheet No. 30
Sub. Original Sheet No. 650

National states that on March 22, 1996, National submitted its Compliance Filing in the above-captioned proceedings. On April 1, 5, and 12, 1996, National submitted corrections to the Compliance Filing. The above-listed sheets reflect corrections as a result of further informal discussions with some customers.

National further states that copies of this filing were served upon company's jurisdictional customers and upon the Regulatory Commissions of the States of New York, Ohio, Pennsylvania, Delaware, Massachusetts, and New Jersey.

Any person desiring to protest said filing should file a protest with the Federal Energy Regulatory Commission, 888 First Street, N.E., Washington, D.C., 20426, in accordance with Rule 211 of the Commission's Rules of Practice and Procedure (18 CFR 385.211). All such protests must be filed as provided in Section 154.210 of the Commission's Regulations. Protests will be considered by the Commission in determining the appropriate action to be taken but will not serve to make protestants parties to the proceeding. Copies of this filing are on file with the Commission and are available for public inspection.

Lois D. Cashell,

Secretary.

[FR Doc. 96–13639 Filed 5–30–96; 8:45 am]

BILLING CODE 6717–01–M

[Docket No. RP96–242–000]

National Fuel Gas Supply Corporation; Notice of Petition To Waive Tariff Provision

May 24, 1996.

Take notice that on May 21, 1996, National Fuel Gas Supply Corporation (National Fuel) filed a Petition for Waiver of a provision in its FT Rate Schedule.

In its petition, National Fuel requests a waiver of Section 3.2 of National Fuel's FT Rate Schedule to the extent necessary to permit National Fuel to accept the guaranty from Enron Corp. of the obligations of its subsidiary, Enron Capital & Trade Resources (EC&T), in an account in excess of cost of performing the service requested by EC&T for a three-month period. National Fuel states that the limited financial assurance permitted by Section 3.2 would not secure the cost of facilities National Fuel would be required to construct to serve EC&T, and that EC&T fully supports the instant petition.

National Fuel also requests that the Commission grant the requested waiver by June 25, 1996, so that the transaction may proceed as comtemplated by the parties.

Any person desiring to be heard or to protest said filing should file a motion to intervene or protest with the Federal Energy Regulatory Commission, 888 First Street, N.E., Washington, D.C. 20406, in accordance with Sections 385.211 or 385.214 of the Commission's Rules of Practice and Procedure (18 CFR 385.211 or 385.214). All such motions or protest must be filed as provided in Section 154.210 of the Commission's Regulations. Protests will be considered by the Commission in determining the appropriate action to be taken, but will not serve to make protestants parties to the proceeding. Any person wishing to become a party must file a motion to

intervene. Copies of this filing are on file with the Commission and are available for Public Reference Room.

Lois D. Cashell,

Secretary.

[FR Doc. 96–13640 Filed 5–30–96; 8:45 am]

BILLING CODE 6717–01–M

[Docket No. RP96–243–000]

Northern Natural Gas Company; Notice of Proposed Changes in FERC Gas Tariff

May 24, 1996.

Take notice that on May 22, 1996, Northern Natural Gas Company (Northern), tendered for filing to become part of Northern's FERC Gas Tariff, Fifth Revised Volume No. 1 and Original Volume No. 2, the following tariff sheets proposed to be effective June 1, 1996:

Fifth Revised Volume No. 1

22 Revised Sheet No. 50
22 Revised Sheet No. 51
Ninth Revised Sheet No. 52
29 Revised Sheet No. 53
Ninth Revised Sheet No. 59
Tenth Revised Sheet No. 60
Third Revised Sheet No. 109
First Revised Sheet No. 110
Second Revised Sheet No. 111
Second Revised Sheet No. 124
First Revised Sheet No. 125
Third Revised Sheet No. 132
First Revised Sheet No. 133

Original Volume No. 2

149 Revised Sheet No. 1C
24 Revised Sheet No. 1C.a

Northern states that this filing recognizes that the TCR Surcharge expires on May 31, 1996 and the GSR TI surcharge component applicable to TI volumes increases by the same amount pursuant to Section 21 and 25 of the General Terms and Conditions of Northern's Tariff.

Northern states that copies of the filing were served upon the company's customers and interested State Commissions.

Any person desiring to be heard or to protest said filing should file a motion to intervene or protest with the Federal Energy Regulatory Commission, 888 First Street, NE., Washington, DC 20426, in accordance with Sections 385.214 and 385.211 of the Commission's Rules and Regulations. All such petitions or protests must as provided in Section 154.210 of the Commission's Regulations. All protests will be considered by the Commission in determining the appropriate action to be taken in this proceeding, but will not serve to make Protestant a party to the proceeding. Any person wishing to become a party must file a motion to intervene. Copies of this filing are on file with the Commission and are available for inspection.

Lois D. Cashell,

Secretary.

[FR Doc. 96–13641 Filed 5–30–96; 8:45 am]

BILLING CODE 6717–01–M

[Docket Nos. EC96–24–000 and EL96–55–000]

Old Dominion Electric Cooperative; Notice of Filing

May 24, 1996.

Take notice that on May 20, 1996, Old Dominion Electric Cooperative (Old Dominion or Applicant) filed an application seeking an order under Section 203 of the Federal Power Act authorizing Old Dominion to enter a lease and leaseback transaction that includes its 50% undivided interest in certain jurisdictional transmission facilities related to Unit 2 at the Clover Power Station located in Halifax County, Virginia.

Any person desiring to be heard or to protest said filing should file a motion to intervene or protest with the Federal Energy Regulatory Commission, 888 First Street, N.E., Washington, D.C. 20426, in accordance with Rules 211 and 214 of the Commission's Rules of Practice and Procedure (18 CFR 385.211 and 18 CFR 385.214). All such motions or protests should be filed on or before June 6, 1996. Protests will be considered by the Commission in determining the appropriate action to be taken, but will not serve to make protestants parties to the proceeding. Any person wishing to become a party must file a motion to intervene. Copies of this filing are on file with the Commission and are available for public inspection.

Lois D. Cashell,

Secretary.

[FR Doc. 96–13632 Filed 5–30–96; 8:45 am]

BILLING CODE 6717–01–M

[Docket No. CP96–534–000]

Panhandle Eastern Pipe Line Company; Notice of Request Under Blanket Authorization

May 24, 1996.

Take notice that on May 22, 1996, Panhandle Eastern Pipe Line Company (Panhandle), P.O. Box 1642, Houston, Texas 77251–1642, filed in Docket No. CP96–534–000 a request pursuant to Sections 157.205 and 157.216 of the Commission's Regulations under the Natural Gas Act (18 CFR 157.205, 157.216) for authorization to abandon and remove an existing meter and regulation facility located in Seward County, Kansas under Panhandle's blanket certificate issued in Docket No. CP83–83–000 pursuant to Section 7 of the Natural Gas Act, all as more fully set forth in the request that is on file with the Commission and open to public inspection.

Panhandle proposes to abandon and remove the existing meter and regulation facility (Okan Sales Meter) which was used to deliver gas to Koch Pipelines, Inc. (Koch) pursuant to an Industrial Gas Contract between Panhandle and Koch. Panhandle states that the Industrial Gas Contract has terminated and Koch has not sought service since 1994. By letter dated September 1, 1995, Panhandle and Koch mutually agreed to the abandonment of the Okan Sales Meter.

Any person or the Commission's staff may, within 45 days after issuance of the instant notice by the Commission, file pursuant to Rule 214 of the Commission's Procedural Rules (18 CFR 385.214) a motion to intervene or notice of intervention and pursuant to Section 157.205 of the Regulations under the Natural Gas Act (18 CFR 157.205) a protest to the request. If no protest is filed within the time allowed therefor, the proposed activity shall be deemed to be authorized effective the day after the time allowed for filing a protest. If a protest is filed and not withdrawn within 30 days after the time allowed for filing a protest, the instant request shall be treated as an application for authorization pursuant to Section 7 of the Natural Gas Act.

Lois D. Cashell,

Secretary.

[FR Doc. 96–13635 Filed 5–30–96; 8:45 am]

BILLING CODE 6717–01–M

[Docket No. ER96–1086–000]

SCANA Energy Marketing, Inc.; Notice of Issuance of Order

May 24, 1996.

On February 16, 1996, SCANA Energy Marketing, Inc. (SCANA) filed an application for authorization to sell power at market-based rates, and for certain waivers and authorizations. In particular, SCANA requested that the Commission grant blanket approval under 18 CFR Part 34 of all future issuances of securities and assumptions of liabilities by SCANA. On May 13 1996, the Commission issued an Order Accepting for Filing and Suspending Proposed Transmission Tariffs, Conditionally Accepting for Filing Proposed Market-Based Sales Rates, Granting Clarification, Establishing

Hearing Procedures, and Granting and Denying Waivers and Authorizations (Order), in the above-docketed proceeding.

The Commission's May 13, 1996 Order granted the request for blanket approval under Part 34, subject to the conditions found in Ordering Paragraphs (I), (J), and (L):

(I) Within 30 days of the date of this order, any person desiring to be heard or to protest the Commission's blanket approval of issuances of securities or assumptions of liabilities by SCANA should file a motion to intervene or protest with the Federal Energy Regulatory Commission, 888 First Street, NE., Washington, DC 20426, in accordance with Rules 211 and 214 of the Commission's Rules of Practice and Procedure, 18 CFR 385.211 and 385.214.

(J) Absent a request to be heard within the period set forth in Ordering Paragraph (I) above, SCANA is hereby authorized to issue securities and to assume obligations or liabilities as guarantor, endorser, surety or otherwise in respect of any security of another person; provided that such issue or assumption is for some lawful object within the corporate purposes of the applicant, compatible with the public interest, and reasonably necessary or appropriate for such purposes.

(L) The Commission reserves the right to modify this order to require a further showing that neither public nor private interests will be adversely affected by continued Commission approval of SCANA's issuances of securities or assumptions of liabilities * * *.

Notice is hereby given that the deadline for filing motions to intervene or protests, as set forth above, is June12, 1996.

Copies of the full text of the Order are available from the Commission's Public Reference Branch, 888 First Street, NE., Washington, DC 20426.

Lois D. Cashell,

Secretary.

[FR Doc. 96–13669 Filed 5–30–96; 8:45 am]

BILLING CODE 6717–01–M

[Docket No. TM96–2–43–004]

Williams Natural Gas Company; Notice of Proposed Changes in FERC Gas Tariff

May 24, 1996.

Take notice that on May 22, 1996, Williams Natural Gas Company (WNG) tendered for filing to become part of its FERC Gas Tariff, Second Revised Volume No. 1, the following tariff sheets:

Second Substitute Eighth Revised Sheet No. 6

Second Substitute Ninth Revised Sheet No. 6A

The proposed effective date of these tariff sheets is January 1, 1996.

WNG states that this filing is being made in compliance with Commission order issued May 13, 1996 in Docket No. TM96–2–43–001. WNG was directed to file revised tariff sheets within 15 days of the date of the order to comply with section 154.102(e)(5) of the Commission's regulations. Section 154.102(e)(5) requires tariff sheets which are filed to comply with a Commission order to carry the following notation in the bottom margin: ''Filed to comply the following notation in the bottom margin: ''Filed to comply with order of the Federal Energy Regulatory Commission, Docket No. (number), issued (date), (FERC Reports citation).''

WNG states that a copy of its filing was served on all participants listed on the service lists maintained by the Commission in the dockets referenced above and on all jurisdictional customers and interested state commissions.

Any person desiring to protest this filing should file a protest with the Federal Energy Regulatory Commission, 888 First Street, NE., Washington, DC 20426, in accordance with Section 385.211 of the Commission's Rules and Regulations. All such protests must be filed as provided in Section 154.210 of the Commission's Regulations. Protests will be considered by the Commission in determining the appropriate action to be taken, but will not serve to make protestants parties to the proceedings. Copies of this filing are on file with the Commission and are available for public inspection in the Public Reference Room.

Lois D. Cashell,

Secretary

[FR Doc. 96–13643 Filed 5–30–96; 8:45 am]

BILLING CODE 6717–01–M

[Project No. 2550–002 Wisconsin]

N.E.W. Hydro, Inc.; Notice of Availability of Draft Environmental Assessment

May 24, 1996.

In accordance with the National Environmental Policy act of 1969 and the Federal Energy Regulatory Commission's (Commission's) regulations, 18 CFR Part 380 (Order No. 486, 52 FR 47897), the Office of Hydropower Licensing has reviewed the application for a new license for the Weyauwega Hydroelectric Project, located on the Waupaca River, in the City of Weyauwega, Waupaca County, Wisconsin; and has prepared a Draft Environmental Assessment (DEA) for the project. In the DEA, the Commission's staff has analyzed the potential environmental impacts of the existing project and has concluded that approval of the project with appropriate environmental protection measures would not constitute a major federal action significantly affecting the quality of the human environment.

Copies of the DEA are available for review in the Public Reference Branch, Room 2–A, of the Commission's offices at 888 First Street N.E., Washington, D.C. 20426.

Any comments should be filed within 45 days from the date of this notice and should be addressed to Lois D. Cashell, Secretary, Federal Energy Regulatory Commission, Room 1–A, 888 First Street N.E., Washington, D.C. 20426. Please affix ''Weyauwega Hydroelectric Project No. 2550'' to all comments. For further information, please contact James Hunter at (202) 219–2839.

Lois D. Cashell,

Secretary.

[FR Doc. 96–13636 Filed 5–30–96; 8:45 am]

BILLING CODE 6717–01–M

[Project No. 2105–033 California]

Pacific Gas & Electric Company; Notice of Availability of Final Environmental Assessment

May 24, 1996.

A final environmental assessment (FEA) is available for public review. The FEA is for an application to amend the Upper North Fork Feather River Hydroelectric Project. The application is to extend the project boundary to include about 8 acres of land in the vicinity of the Belden Siphon to allow for stabilization of the siphon. The FEA finds that approval of the application would not constitute a major federal action significantly affecting the quality of the human environment. The Upper North Fork Feather River Hydroelectric Project is located on the North Fork Feather River in Plumas County, California.

The FEA was written by staff in the Office of Hydropower Licensing, Federal Energy Regulatory Commission. Copies of the FEA can be viewed in the Public Reference Branch, Room 2A, of the Commission's offices at 888 First Street, NE., Washington, DC 20426.

For further information, please contact the project manager, Ms. Rebecca Martin, at (202) 219–2650.

Lois D. Cashell,

Secretary.

[FR Doc. 96–13670 Filed 5–30–96; 8:45 am]

BILLING CODE 6717–01–M

[Project No. 10856 Michigan]

Upper Peninsula Power Company; Notice of Availability of Draft Environmental Assessment

May 24, 1996.

In accordance with the National Environmental Policy Act of 1969 and the Federal Energy Regulatory Commission's (Commission's) regulations, 18 CFR Part 380 (Order No. 486, 52 F.R. 47897), the Office of Hydropower Licensing has reviewed the application for an original license for the Au Train Hydroelectric Project, located near the towns of Au Train and Munising, Michigan in Alger County, and has prepared a Draft Environmental Assessment (DEA) for the project. In the DEA, the Commission's staff has analyzed the potential environmental impacts of the un-licensed, existing project and has concluded that approval of the project, with appropriate environmental protection or enhancement measures, would not constitute a major federal action significantly affecting the quality of the human environment.

Copies of the DEA are available for review in the Public Reference Branch, Room 2A, of the Commission's offices at 888 First Street, N.E., Washington, D.C. 20426.

Any comments should be filed within 45 days from the date of this notice and should be addressed to Lois D. Cashell, Secretary, Federal Energy Regulatory Commission, 888 First Street, N.E., Washington, D.C. 20426. Please affix ''Au Train Hydroelectric Project No. 10856'' to all comments. For further information, please contact John Blair at (202) 219–2845.

Lois D. Cashell,

Secretary.

[FR Doc. 96–13637 Filed 5–30–96; 8:45 am]

BILLING CODE 6717–01–M

ENVIRONMENTAL PROTECTION AGENCY

[ER–FRL–5470–1]

Environmental Impact Statements and Regulations; Availability of EPA Comments

Availability of EPA comments prepared May 13, 1996 Through May 17, 1996 pursuant to the Environmental Review Process (ERP), under Section 309 of the Clean Air Act and Section 102(2)(c) of the National Environmental Policy Act as amended. Requests for copies of EPA comments can be directed to the Office of Federal Activities at (202) 564–7167. An explanation of the ratings assigned to draft environmental impact statements (EIS) was published in F.R. dated April 05, 1996 (61 F.R. 15251).

Draft EIS

ERP No. D–COE–E32076–NC Rating EC2, Cape Fear-Northeast Cape Fear Rivers Feasibility Study for Deepening of the Wilmington Harbor Ship Channel, Navigation Improvement, New Hanover and Brunswick Counties, NC.

Summary: EPA expressed environmental concerns about the potential adverse impacts associated with use of explosives to excavate the enlarged channel and awaits the results of on-going studies to determine the significance of this dredging technique.

ERP No. D–COE–K36116–CA Rating EC2, San Pedro Creek Section 205 Flood Control Project, Construction, Flood Protection, COME Section 10 and 404 Permits and Permits Approval, San Mateo County, CA.

Summary: EPA expressed environmental concerns over potential impacts to riverain habitat, impacts to air quality, and potential cumulative impacts of the project, including possible increased runoff and siltation.

ERP No. D–FRC–L05215–OR Rating EO2, Leaburg-Walterville Hydroelectric (FERC. No. 2496) Project, Issuance of New License (Relicense), Funding and Land Trust Acquisition, McKenzie River, Lane County, OR.

Summary: EPA expressed environmental objections over continued impacts on fish and other aquatic life in the McKenzie River due to project operation. In addition, EPA commented that the draft EIS did not provide a comprehensive analysis of cumulative impacts, nor was the no-action alternative appropriately characterize.

ERP No. D–USN–K11067–AZ Rating EC2, Yuma Training Range Complex Management, Operation and Development, Marine Corps Air Station Yuma, Goldwater Range, Yuma and La Paz Cos; and Chocolate Mountain Range, Imperial and Riverside Counties, CA.

Summary: EPA expressed environmental concerns regarding alternatives analysis, cumulative impacts issues, and biological impacts.

ERP No. D–USN–K11069–CA Rating EC2, Port Hueneme Naval Civil Engineering Laboratory (NCEL) Disposal and Reuse, Implementation, Ventura County, CA.

Summary: EPA requested further information on air quality and wetlands NEPA issues.

ERP No. DB–COE–E30032–FL Rating EC2, Palm Beach County Beach Erosion Project, Updated Information concerning Shore Protection for the Ocean Ridge Segment from the Martin County line to Lake Worth Inlet and from the South Lake Worth Inlet to the Broward County Line, Palm Beach, Martin and Broward Counties, FL.

Summary: EPA expressed environmental concerns regarding the long-term consequences of this action and other beach nourishment projects planned for the county's shoreline. The additional information derived from the mitigation and subsequent monitoring plan will be necessary to determine how this project fits into the larger issue of the environmental consequences of proposed shoreline protection.

ERP No. DS–COE–E32192–NC Rating EC2, Wilmington Harbor Channel Widening and Navigation Improvement, Updated Information, Cape Fear River, Port of Wilmington, New Hanover and Brunswick Counties, NC.

Summary: EPA expressed environmental concerns about the potential adverse impacts associated with use of explosives to excavate the enlarged channel and seeks additional data on the long-term consequences of these excavation techniques.

ERP No. DS–COE–E36169–FL Rating LO, Central and Southern Florida Flood Control Project, Restoration of the Upper Kissimmee River Basin through the Headwater Revitalization Project and the Lower Kissimmee River Basin through the Level II Backfilling Plan, Implementation, Updated Information, Glades, Osceda Highlands, Polk, Okeechobee and Orange Counties, FL.

Summary: EPA had no objections to this proposal.

Final EIS

ERP No. F–COE–C36071–PR Rio Fajardo Flood Control Feasibility Study for Flood Protection, Implementation, PR.

Summary: EPA had no objection to the proposed action.

ERP No. F–USA–K11059–CA Hamilton Army Airfield Disposal and Reuse, Implementation, City of Novato, Marin County, CA.

Summary: EPA environmental concerns were mostly answered satisfactorily in the Final EIS. One minor biological resources issue remains unresolved.

Dated: May 28, 1996.

Katherine B. Biggs,

Associate Director, NEPA Compliance Division, Office of Federal Activities.

[FR Doc. 96–13715 Filed 5–30–96; 8:45 am]

BILLING CODE 6560–50–P

[ER–FRL–5469–9]

Environmental Impact Statements; Notice of Availability

RESPONSIBLE AGENCY: Office of Federal Activities, General Information (202) 564–7167 or (202) 564–7153.

Weekly receipt of Environmental Impact Statements Filed May 20, 1996 Through May 24, 1996 Pursuant to 40 CFR 1506.9.

EIS No. 960241, Draft EIS, BLM, UT, Lisbon Valley Copper Project, Plan of Operations Approval for an Open Pit Copper Mine and Heach Operation in Lower Lisbon Valley, San Juan and Grand Counties, UT, Due: July 15, 1996, Contact: Lynn Jackson (801) 259–6111.

EIS No. 960242, Final EIS, FHW, AR, LA, US 71 Highway Transportation Project, Construction between Texarkana to Louisiana State Line, Funding, Right-of-Way and COE Section 404 Permit, Miller County, AR, Due: July 01, 1996, Contact: Wendall Meyer (501) 324–6430.

EIS No. 960243, Final EIS, BLM, MT, Sweet Grass Hills Resource Management Plan Amendment, Implementation, West HiLine Resource Management Plan, Toole and Liberty Counties, MT, Due: July 01, 1996, Contact: James Beaver (406) 255–2910.

EIS No. 960244, Draft Supplement, FHW, NC, Smith Creek Parkway and Downtown Spur Construction, from NC 133 at Northeast Cape Fear River to US–74/Eastwood Road and US–117/Castle Hayne Road at Smith Creek to 3rd Street, Updated and Additional Information, Funding, Wilmington, New Hanover County, NC, Due: July 15, 1996, Contact: Nicholas L. Graf (919) 856–4346.

EIS No. 960245, Draft EIS, AFS, UT, Western Uinta Basin Oil and Gas Leasing, Implementation, Federal Oil and Gas Estate on Land Administrated by the Uinta and Ashley National Forests in the western portion of the Uinta Basin, Wasatch and Duchesne Counties, UT, Due: July 15, 1996, Contact: Chaunice Todd (801) 789–1181.

EIS No. 960246, Draft EIS, AFS, CA, Humboldt Nursery Pest Management Plan, Implementation, Six Rivers National Forest, McKinleyville, Humboldt County, CA, Due: July 15, 1996, Contact: Susan Frankel (415) 705–2651.

EIS No. 960247, Final Supplement, SCS, TX, Attoyac Bayou Watershed, Flood Prevention and Watershed Protection, New Information concerning Installation of a Multiple-purpose Reservoir on the Naconiche Creek Watershed for Flood Prevention and Recreational Storage, Funding, Nacogdoches, Shelby, Rusk and San Augustine Counties, TX, Due: July 01, 1996, Contact: Harry W. Oneth (871) 774–1214.

EIS No. 960248, Final EIS, FHW, WA, WA–3/WA–304, Bremerton Ferry Terminal to the vicinity of Gorst Highway Improvement Project, Implementation, Funding, Right-of-Way Grant, NPDES Permit and COE Section 404 Permit, City of Bremerton, Kitsap County, WA, Due: July 01, 1996, Contact: Jim Leonard (360) 753–2120.

EIS No. 960249, Final EIS, AFS, ID, White Sand Planning Area Ecosystem Management Project, Implementation, Clearwater National Forest, Powell Ranger District, Idaho County, ID, Due: July 01, 1996, Contact: Jeff Pope (208) 942–3113.

EIS No. 960250, Final EIS, AFS, MT, Mormon Ridge Winter Range Peak Ecosystem Restoration, Implementation, Lolo National Forest, Missoula Ranger District, Missoula County, MT, Due: July 01, 1996, Contact: Andy Kulla (406) 329–3962.

EIS No. 960251, Final EIS, AFS, AK, Eight Fathom Timber Sales, Implementation, COE Section 404 Permit and EPA NPDES, Tongass National Forests, Hoonah and Sitka Ranger District, Chatham Area, AK, Due: July 01, 1996, Contact: Michael Weber (907) 747–6671.

EIS No. 960252, Final EIS, SFW, CA, Programmatic EIS—Natural Community Conservation Plan/Habitat Conservation Plan, Implementation and Associated Incidental Take Permit Issuance, Central and Coastal Subregion, Orange County, CA, Due: July 01, 1996, Contact: Dave Harlow (916) 979–2710.

Dated: May 28, 1996.

Katherine B. Biggs,

Associate Director, NEPA Compliance Division, Office of Federal Activities.

[FR Doc. 96–13716 Filed 5–30–96; 8:45 am]

BILLING CODE 6560–50–U

[FRL–5511–8]

Meeting of the Small Town Task Force

On June 17, 1996 the Small Town Environmental Planning Task Force (STTF) will conduct its sixth meeting. The purpose of the meeting is to discuss the recommendations made in their final report to be presented to the Administrator of EPA. The Task Force will also discuss its future role, purpose and structure.

The Task Force was charged with identifying regulations developed pursuant to Federal environmental laws which pose significant compliance problems for small towns; identifying the means to improve the working relationship between the Environmental Protection Agency and small towns; reviewing proposed regulations for the protection of environmental and public health and suggesting revisions that could improve the ability of small towns to comply with such regulations; and identifying the means to promoting regionalization of environmental treatment systems and infrastructure serving small towns to improve the economic conditions of such systems and infrastructure. Their Final Report provides recommendations on these topics for consideration by EPA's Administrator.

The meeting will be held at the Dupont Plaza Hotel, located at 1500 New Hampshire Avenue, NW., Washington, DC 20036. The meeting will begin at 8:30 a.m. on June 17th and conclude at 5:00 p.m.

The Designated Federal Officer (DFO) for this subcommittee is Christine Zawlocki. She is the point of contact for information concerning any subcommittee matters and can be reached by calling (202) 260–0244 or by writing to: U.S. EPA, 401 M Street, SW. (1502), Washington, DC 20460.

This is an open meeting and all interested persons are invited to attend. Meeting minutes will be available within forty-five days after the meeting and con be obtained by written request from the DFO. Members of the public are requested to call the DFO at the above number if planning to attend so the arrangements can be made to comfortably accommodate attendees as much as possible.

Christine Zawlocki,

Designated Federal Official, Office of Regional Operations and State/Local Relations.

[FR Doc. 96–13662 Filed 5–30–96; 8:45 am]

BILLING CODE 6560–50–M

[PF–656; FRL–5372–7]

Cucumber Mosaic Virus Coat Protein; Notice of Filing

AGENCY: Environmental Protection Agency (EPA).

ACTION: Notice of filing.

SUMMARY: This notice announces that Asgrow Seed Company has submitted pesticide petitions 6E4670 proposing that the transgenic plant pest control agent Cucumber Mosaic Virus Coat Protein be exempt from the requirement of a tolerance when used in or on all raw agricultural commodities.

DATES: Comments, identified by the docket number [PF–656], must be received on or before July 1, 1996.

ADDRESSES: By mail, submit written comments to: Public Response and Program Resources Branch, Field Operations Division (7506C), Office of Pesticide Programs, Environmental Protection Agency, 401 M St., SW., Washington, DC 20460. In person, bring comments to: Rm. 1132, CM #2, 1921 Jefferson Davis Highway, Arlington, VA 22202. Comments and data may also be submitted electronically by sending electronic mail (e-mail) to: opp-docket@epamail.epa.gov. Electronic comments must be submitted as an ASCII file avoiding the use of special characters and any form of encryption. Comments and data will also be accepted on disks in WordPerfect 5.1 file format or ASCII file format. All comments and data in electronic form must be identified by the docket number [PF–656]. Electronic comments on this notice may be filed online at many Federal Depository Libraries. Additional information on electronic submissions can be found below in this document.

Information submitted as a comment concerning this document may be claimed confidential by marking any part or all of that information as ''Confidential Business Information'' (CBI). CBI should not be submitted through e-mail. Information marked as CBI will not be disclosed except in accordance with procedures set forth in 40 CFR part 2. A copy of the comment that does not contain CBI must be submitted for inclusion in the public record. Information not marked confidential may be disclosed publicly by EPA without prior notice. All written comments will be available for public inspection in Rm. 1132 at the address given above, from 8 a.m. to 4:30 p.m., Monday through Friday, excluding legal holidays.

FOR FURTHER INFORMATION CONTACT: Linda Hollis, PM 90 Team Member, Biopesticides and Pollution Prevention Division, 7501W, Environmental Protection Agency, 401 M St., SW., Washington, DC 20460. Office location and telephone number: Rm 20, CS #1, (insert street address) Arlington, VA 22202, 703 308–8733, e-mail: hollis.linda@epamial.epa.gov.

SUPPLEMENTARY INFORMATION: Asgro Seed Company, Experimental Plant Genetics Unit, Kalamazoo, MI 49001 has submitted pesticide petition (PP) 6E4670 proposing to amend 40 CFR part 180 to exempt from the requirements of a tolerance residues of the transgenic plant pest control agent Cucumber Mosaic Virus Coat Protein in or on all raw agricultural commodities. (PM 90)

A record has been established for this notice under docket number [PF–656] (including comments and data submitted electronically as described below). A public version of this record, including printed, paper versions of electronic comments, which does not include any information claimed as CBI, is available for inspection from 8 a.m. to 4:30 p.m., Monday through Friday, excluding legal holidays. The public record is located in Room 1132 of the Public Response and Program Resources Branch, Field Operations Division (7506C), Office of Pesticide Programs, Environmental Protection Agency, Crystal Mall #2, 1921 Jefferson Davis Highway, Arlington, VA.

Electronic comments can be sent directly to EPA at:

opp-Docket@epamail.epa.gov

Electronic comments must be submitted as an ASCII file avoiding the use of special characters and any form of encryption.

The official record for this rulemaking, as well as the public version, as described above will be kept in paper form. Accordingly, EPA will transfer all comments received electronically into printed, paper form as they are received and will place the paper copies in the official rulemaking record which will also include all comments submitted directly in writing. The official rulemaking record is the paper record maintained at the address in ''ADDRESSES'' at the beginning of this document.

List of Subjects

Environmental protection, Administrative practice and procedure, Agricultural commodities, Pesticides and pests, Reporting and recordkeeping requirements.

Dated: May 20, 1996.

Janet L. Anderson,

Acting Director, Biopesticides and Pollution Prevention Division, Office of Pesticide Programs.

[FR Doc. 96–13821 Filed 5–30–96; 8:45 am]

BILLING CODE 6560–50–F

[FRL–5512–5]

Agency Information Collection Activities Under MOB Review

AGENCY: Environmental Protection Agency (EPA).

ACTION: Notice.

SUMMARY: In compliance with the Paperwork Reduction Act (44 U.S.C. 3501 *et seq.*), this notice announces the Office of Management and Budget's (OMB) responses to Agency PRA clearance requests. An agency may not conduct or sponsor, and a person is not required to respond to, a collection of information unless it displays a currently valid OMB control number. The OMB control numbers for EPA's regulations are listed in 40 CFR Part 9 and 48 CFR Chapter 15.

FOR FURTHER INFORMATION CONTACT: Sandy Farmer (202) 260–2740, please refer to the EPA ICR No.

SUPPLEMENTARY INFORMATION:

OMB Responses to Agency PRA Clearance Requests

OMB Approvals

EPA ICR No. 1601.02; Information Requirements for Petitions to modify the List of Regulated Substances under Section 112(r) of the Clean Air Act, as Amended; was approved 04/02/96; OMB No. 2050–0127; expires 04/30/99.

EPA ICR No. 0160.05; Application for Registration of Pesticide-Producing Establishments; Notification of Registration of Pesticide-Producing Establishments; Pesticide Report for Pesticide-Producing Establishments; was approved 04/11/96; OMB No. 2070–0078; expires 04/30/99.

EPA ICR No. 0619.07; Mobile Source Emission Factor Survey; was approved 02/07/96; OMB No. 2060–0078; expires 02/28/99.

EPA ICR No. 1614.02; Reporting and Recordkeeping Requirements under EPA's Green Light Program; was approved 04/29/96; OMB No. 2060–0255; expires 04/30/99.

EPA ICR No. 1039.07; Amendments to Contract Clauses for Monthly Progress Report; was approved 05/20/96; OMB No. 2030–0005; expires 11/30/96.

EPA ICR No. 0662.05; NSPS for VOC Equipment Leaks in the Synthetic

Organic Chemical Manufacturing Industry (SOCMI)—40 CFR Part 60, Subpart VV; was approved 04/29/96; OMB No. 2060–0012; expires 04/30/99.

EPA ICR No. 1557.03; New Source Performance Standards for Municipal Solid Waste Landfills; was approved 04/29/96; OMB No. 2060–0220; expires 04/30/99.

EPA ICR No. 1770.02; Import of PCB Wastes for Disposal; was approved 04/26/96; OMB No. 2070–0149; expires 04/30/99.

EPA ICR No. 0649.06; NSPS for Metal Furniture Coating—40 CFR Part 60, Subpart EE; was approved 04/29/96; expires 04/30/99.

EPA ICR No. 1542.03; Tribal Assumption of the Section 404 Permit Program; was approved 04/26/96; OMB No. 2040–0140; expires 04/30/98.

EPA ICR No. 1772.01; Information Collection Activities Associated with EPA's Energy Star Building Program; was approved 04/29/96; OMB No. 2060–0347; expires 04/30/96.

EPA ICR No. 0275.06; Preaward Compliance Review Report; was approved 04/29/96; OMB No. 2090–0014; expires 04/30/99.

EPA ICR No. 1710.02; Residential Lead-Based Paint Hazard Disclosure Requirements; was approved 04/22/96; OMB No. 2070–0151; expires 04/30/99.

EPA ICR No. 0982.05; Standards of Performance for NSPS, Metallic Mineral Processing Plants—Subpart LL; was approved 03/31/96; OMB No. 2060–0016; expires 03/31/99.

EPA ICR No. 1608.01; State/Tribal Municipal Solid Waste Landfill (MSWLF) Program Adequacy Determinations; was approved 04/15/96; OMB No. 2050–0152; expires 04/30/99.

EPA ICR No. 0746.03; NSPS for Calciners and Dryers in Mineral Industries—Subpart UUU; was approved 03/31/96; OMB No. 2060–0252; expires 03/31/99.

EPA ICR No. 0795.09; Notification of Chemical Experts—TSCA Section 12(b); was approved 04/26/96; OMB No. 2070–0030; expires 04/30/96.

EPA ICR No. 0152.05; Notice of Arrival of Pesticides and Devices; was approved 04/25/96; OMB No. 2070–0030, expires 04/30/99.

EPA ICR No. 0783.33; Application of Motor Vehicle Emission Certification and Fuel Economy Labeling; was approved 08/24/95; OMB No. 2060–0104; expires 08/31/98.

EPA ICR No. 1188.05; Significant New Use Rules for Exsiting Chemicals—TSCA Section 5(a)(2); was approved 04/17/96; OMB No. 2070–0038; expires 04/30/99.

EPA ICR No. 1031.05; Allegations of Significant Adverse Reactions to Human Health or the Environment—TSCA Section 8(c); was approved 04/15/96; OMB No. 2070–0017; expires 04/30/99.

EPA ICR No. 0575.07; Health and Safety Data Reporting, Submission of Lists and Copies of Health and Safety Studies; was approved 04/15/96; OMB No. 2070–0004; expires 04/30/99.

EPA Withdrawals From OMB

EPA ICR NO. 0370.14; UIC Land Disposal Restrictions, Phase III, Decharacterized Wastewaters, Barbamate Wastes, and Spent Potliners; OMB No. 2040–0042; was withdrawn from OMB 04/28/96.

EPA ICR No. 1088.07; Agency Information Activities Renewal for NSPS Subpart Db; OMB No. 2060–0072; was withdrawn from OMB 04/29/96.

EPA ICR No. 1442.12; Land Disposal Restrictions—Phase III: Decharacterized Wastewaters, Barbamate Wastes, and Spent Aluminum Potliners: Final Rule; OMB No. 2050–0085; was withdrawn from OMB 04/29/96.

OMB Disapproval

EPA ICR No. 1442.111; Land Disposal Restrictions, Supplemental Proposal to Phase IV: Clarification of Bevill Exclusion for Mining Wastes; Changes to the Definition of Solid Waste for Mineral Processing Wastes; was disapproved by OMB 04/05/96.

Extension of Expiration Dates

EPA ICR 0116.04; Emission Control System Performance Warranty Regulations and Voluntary Aftermarket Part Certification Program; OMB No. 2060–0060; expiration date was extended to 07/31/96.

EPA ICR No. 1088.06; NSPS for Industrial, Commercial, Institutional Steam Generating Units (Subpart DB), Information Requirement, S02, PM, NOX; OMB No. 2060–0072; expiration date was extended to 07/31/96.

Dated: May 22, 1996.

Joseph Retzer,

Director, Regulatory Information Division.

[FR Doc. 96–13714 Filed 5–30–96; 8:45 am]

BILLING CODE 6560–50–M

[FRL–5510–3]

Soil Screening Guidance

AGENCY: Environmental Protection Agency.

ACTION: Notice of availability of Soil Screening Guidance.

SUMMARY: The U.S. Environmental Protection Agency (EPA) has developed the Soil Screening Guidance which is now available. This guidance presents a framework for developing soil screening levels (SSLs), focusing primarily on a simple methodology for developing site-specific screening levels, but including generic levels and the opportunity to do more detailed modeling. The guidance can serve as a tool to expedite the evaluation of contaminated soils at sites addressed under the Comprehensive Environmental Response, Compensation, and Liability Act (CERCLA), commonly known as Superfund. The guidance is intended to be used to screen out areas of sites, exposure pathways, or chemicals of concern from further consideration, assuming certain conditions are present, or to determine that further study is warranted at a site. It is not a rule, does not have the force of a regulation, nor should it be interpreted to represent cleanup standards for a site.

The Soil Screening Guidance is presented in three documents: (1) a Quick Reference Fact Sheet, which provides an overview of the development and use of soil screening levels; (2) a User's Guide, which provides details for implementing a simple methodology for calculating site-specific SSLs; and (3) a Technical Background Document (TBD), which presents generic SSLs and the technical foundation for the methodology for establishing SSLs. These documents are available from the National Technical Information Service at the address listed below. Additional supporting information, including summaries of previous outreach activities, is available for inspection in the Superfund Docket at the address listed below.

As part of the development of the Soil Screening Guidance, EPA conducted extensive outreach and peer review. A major component of that outreach was providing the document for public comment (59 FR 67706, December 30, 1994). As a result of comments received during the public comment period and the independent scientific peer review conducted concurrently, several changes were made to the guidance. The highlights of that process are presented below. In addition, EPA has developed a more detailed Response to Comments on the public review draft and the independent scientific peer review. This document is also available from the National Technical Information Service (see below).

DATES: The Soil Screening Guidance was signed by Assistant Administrator Laws on May 17, 1996 and is now being published by National Technical Information Service (NTIS).

ADDRESSES: Copies of the draft Soil Screening Guidance may be ordered

through the NTIS at (703)487–4650 as follows:

Soil Screening Guidance Quick Reference Fact Sheet, 9355.4–14FSA, PB96–963501, EPA/540/F–95/041

Technical Background Document for Soil Screening Guidance, 9355.4–17A, PB96–963502, EPA/540/R–95/128

Soil Screening Guidance: User's Guide, 9355.4–23, PB96–963505, EPA/540/R–96/018

Soil Screening Guidance: Response to Comments, 9355.4–22, PB96–963506, EPA/540/R–96/019

Members of the public are invited to inspect the docket developed to support the Soil Screening Guidance at the Superfund Docket, U.S. Environmental Protection Agency, 1235 Jefferson Davis Highway, Arlington, Virginia. [Docket Number SSL]. The docket is available for inspection between 9:00 a.m. and 4:00 p.m., Monday through Friday, excluding Federal holidays. Appointments to review the docket can be made by calling (703) 603–9232. The public may copy a maximum of 266 pages from the docket free of charge, however a charge of 15 cents will be incurred for each additional page, plus a $25.00 administrative fee.

FOR FURTHER INFORMATION CONTACT: The RCRA/Superfund Hotline at (800) 424–9346 (in the Washington, D.C. metropolitan area, (703) 412–9810). The Telecommunications Device for the Deaf (TDD) Hotline number is (800) 553–7672 (in the Washington, DC metropolitan area, (703) 412–3323). You may also contact David Cooper, Office of Emergency and Remedial Response (5204G), U.S. Environmental Protection Agency, 401 M Street, S.W., Washington, D.C. 20460, at (703) 603–8763.

SUPPLEMENTARY INFORMATION:

Introduction

The U.S. Environmental Protection Agency (EPA) responds to releases and threatened releases of hazardous substances under the authority of the Comprehensive Environmental Response, Compensation, and Liability Act of 1980 (CERCLA). Regulations governing such responses are found in the National Oil and Hazardous Substances Pollution Contingency Plan or NCP. The process for remedy selection in the NCP generally requires that a remedial investigation be performed to identify the nature and extent of contamination at National Priorities List (NPL) sites. From sampling results, as well as site observations obtained in the field, specific contaminants and exposure pathways of concern are identified and used in a baseline risk assessment performed to determine whether remedial action is warranted. (See source documents 1 and 2 listed at the end of this document.)

Today's Federal Register notice announces the availability of a new tool which may reduce significantly the time it takes to complete soil investigations and cleanup actions, as well as improve the consistency of these actions across the nation. The guidance was written to enhance the efficiency of remedial investigation/feasibility study (RI/FS) work at Superfund National Priorities List (NPL) sites. This guidance on developing soil screening levels is expected to assist site managers in quickly identifying contaminated soil of potential concern and in screening out from further consideration those soils that do not warrant additional study.

The Soil Screening Guidance presents three recommended methods for developing risk-based, soil screening levels, but emphasizes a simple, site-specific approach. The formulae and exposure assumptions used to develop the screening levels have been taken from the Risk Assessment Guidance for Superfund [1,2] and have been widely accepted in the Superfund program for a number of years. These levels are then compared to on-site soil contaminant levels. Areas of a site which fall below the screening levels may be eliminated from further assessment. Areas above the screening levels generally warrant further evaluation of the potential risks that may be posed by site contaminants to determine the need for response action. While the guidance is recommended for use as a screening tool to determine if further study of specific portions of a site is warranted, the levels should not be interpreted to represent cleanup standards for a site.

Background

In 1993 EPA's Office of Emergency and Remedial Response (OERR) developed a draft fact sheet entitled: ''Interim Soil Screening Level Guidance.'' This guidance discussed the development and use of risk-based Soil Screening Levels (SSLs) for 30 common Superfund soil contaminants. The document was issued on September 30, 1993, to provide the basis for discussion of the SSL project with stakeholders and is available for review as background information in the Superfund Docket. The effort to develop such a guidance was requested under both the EPA Administrator's June 19, 1991, ''30-Day Study,'' and the more recent Superfund Administrative Improvements Initiatives announced by the Deputy Administrator on June 23, 1993. This guidance was subsequently revised and expanded to become the ''Soil Screening Guidance,'' dated December 1994. This guidance was provided to the public for comment (59 FR 67706) and submitted to independent scientific peer review. As a result of comments received in this process, we made several changes to the document. Some of the most significant comments are highlighted here. The Response to Comments provides a more in-depth discussion of these changes and many other, less significant technical changes.

(1) Guidance needs to be more user friendly. EPA has modified the presentation of the guidance because many people commented that it was not clear how to implement the guidance. The Soil Screening Guidance has been reorganized into a ''user's guide'' to provide more useful information on how to develop simple site-specific screening levels and compare those to contaminant concentrations found at sites.

(2) Generic SSLs will be misused. The generic SSLs are still part of the framework, but they have been moved to the Technical Background Document in an effort to prevent their misuse. They now appear in a section which discusses the technical assumptions that go into the development of those numbers.

(3) Generic SSLs are too conservative. Another impetus for moving the generic levels to the TBD is concern that the generic levels were too conservative. One of the modeling inputs leading to this conservatism is the assumption of an infinite source of contamination. To address this concern, the new guidance provides an opportunity use site-specific information to develop a conservative estimate of the volume of contamination at the site.

(4) Sampling strategy was based on an assumption that is not appropriate for all sites. One of the peer reviewers commented that the approach for sampling the site to determine the contaminant concentrations was dependent on the assumption of a log-normal distribution of contamination that may not actually occur at the site. That approach has been replaced by a strategy that includes adequate sampling of surface soil in the exposure area, compositing of some samples to reduce laboratory costs, and comparison of the screening level with the maximum of the composite samples from each exposure area. The strategy balances the desire for a statistically based sampling strategy with the need to control the number of samples and the laboratory costs.

(5) Non-residential land uses need to be considered. EPA received from many stakeholders that SSLs should be developed for other land uses such as industrial or recreational. EPA agrees in principle that other land uses need to be considered. However, as a first step in the development of screening levels EPA chose to focus on residential use because there is more agreement in the risk assessment community about the types of relevant pathways and assumptions appropriate for modeling residential exposures. Several of the Superfund reforms announced in October 1995 address non-residential land uses and should provide information which could be used to expand the soil screening guidance to other land uses.

Goals

EPA's goal in developing this guidance is to provide a tool which can be used to expedite the evaluation of contaminated soils at sites addressed under CERCLA. The guidance is intended to be used to screen out areas of sites, exposure pathways, or chemicals of concern from further consideration or to determine that further study is warranted at a site. It may be used where assumptions made in developing the tool (e.g., residential land use, no ecological concerns) are consistent with conditions found at specific sites.

This guidance is not intended to be, and should not be construed as a rule. Use of the guidance is not legally binding either on EPA staff or on other parties; rather it is intended to be a tool available for use under appropriate site-specific conditions. NPL sites do not all meet the conditions necessary for its use, consequently, EPA does not expect this tool to be useful at all NPL sites. EPA staff applying the guidance have discretion to follow it or diverge from it as site-specific conditions may warrant, and each site-specific action will be explained on its own record.

Please contact individuals and offices listed in the sections of this notice entitled ''Addresses'' and ''For Further Information Contact'' to learn more about the Soil Screening Guidance.

Source Documents

1. U.S. EPA. 1989. Risk Assessment Guidance for Superfund: Volume 1: Human Health Evaluation Manual, Part A, Interim Final. EPA/540/1–89/002. Office of Emergency and Remedial Response, Washington D.C. NTIS PB90–155581/CCE.

2. U.S. EPA. 1991. Risk Assessment Guidance for Superfund, Volume 1: Human Health Evaluation Manual (Part B, Development of Risk-Based Preliminary Remediation Goals). Publication 9285.7–01B. Office of Emergency and Remedial Response, Washington, D.C. NTIS PB92–963333.

Dated: May 17, 1996.

Elliott P. Laws,

Assistant Administrator.

[FR Doc. 96–13431 Filed 5–30–96; 8:45 am]

BILLING CODE 6560–50–P

FEDERAL COMMUNICATIONS COMMISSION

Notice of Public Information Collections Submitted to OMB for Review and Approval

May 23, 1996.

SUMMARY: The Federal Communications, as part of its continuing effort to reduce paperwork burden invites the general public and other Federal agencies to take this opportunity to comment on the following proposed and/or continuing information collections, as required by the Paperwork Reduction Act of 1995, Public Law 104–13. An agency may not conduct or sponsor a collection of information unless it displays a currently valid control number. No person shall be subject to any penalty for failing to comply with a collection of information subject to the Paperwork Reduction Act (PRA) that does not display a valid control number. Comments are requested concerning (a) whether the proposed collection of information is necessary for the proper performance of the functions of the Commission, including whether the information shall have practical utility; (b) the accuracy of the Commissions burden estimates; (c) ways to enhance the quality, utility, and clarity of the information collected and (d) ways to minimize the burden of the collection of information on the respondents, including the use of automated collection techniques or other forms of information technology.

DATES: Written comments should be submitted on or before July 1, 1996. If you anticipate that you will be submitting comments, but find it difficult to do so within the period of time allowed by this notice, you should advise the contact listed below as soon as possible.

ADDRESS: Direct all comments to Dorothy Conway, Federal Communications, Room 234, 1919 M St., NW., Washington, DC 20554 or via internet to dconway@fcc.gov and Timothy Fain, OMB Desk Officer, 10236 NEOB 725 17th Street, NW., Washington, DC 20503 or fain_t@a1.eop.gov.

FOR FURTHER INFORMATION CONTACT: For additional information or copies of the information collections contact Dorothy Conway at 202–418–0217 or via internet at dconway@fcc.gov.

SUPPLEMENTARY INFORMATION:

OMB Approval No.: 3060-0099.

Title: Form M - Annual Report Form M.

Form No.: FCC Form M.

Type of Review: Extension.

Respondents: Businesses or other for-profit.

Number of Respondents: 3.

Estimated Time Per Response: 1120 hours.

Total Annual Burden: 3360.

Needs and Uses: FCC Form M is the Annual Report of financial and operating information from all subject telephone companies having annual operating revenues in excess of $100 million. It is needed to provide the Commission with the data required to fulfill its regulatory responsibilities.

OMB Approval No.: 3060-0550.

Title: Certification of Franchising Authority to Regulate Basic Cable Service Rates and Initial Finding of Lack of Effective Competion.

Form No.: FCC Form 328.

Type of Review: Extension of currently approved collection.

Respondents: State, Local or Tribal Government.

Number of Respondents: 800.

Estimated Time Per Response: 30 minutes.

Total Annual Burden: 400 hours.

Needs and Uses: On 4/1/93, the Commission adopted a Report and Order, FCC 93-177, MM Docket No. 92-266. Among other things, this Report and Order implements Section 623(a)(3) of the Communications Act of 1934, as amended, wherein a local franchise authority is required to file with the Commission a written certification when it requests to regulate basic service rates. Subsequently, the Commission developed the FCC Form 328 to provide a standardized, simple form for meeting this requirement. To fulfill the obligations set forth under Section 623(a)(3) a franchise authority must: (1) adopt regulations consistent with the Commission's regulations for basic cable service; (2) have legal authority to regulate basic service which comes from state law; (3) the personnel to administer such regulations; and (4) have procedural regulations allowing for public participation in rate regulation proceedings. The FCC Form 328 is reviewed by FCC staff to ensure that a franchising authority has met the criteria specified in Section 623(a)(3) of the Communications Act of 1934 as amended.

Federal Communications Commission.

William F. Caton,

Acting Secretary.

[FR Doc. 96–13668 Filed 5–30–96; 8:45 am]

BILLING CODE 6712–01–F

FEDERAL RESERVE SYSTEM

Change in Bank Control Notices; Acquisitions of Shares of Banks or Bank Holding Companies

The notificants listed below have applied under the Change in Bank Control Act (12 U.S.C. 1817(j)) and § 225.41 of the Board's Regulation Y (12 CFR 225.41) to acquire a bank or bank holding company. The factors that are considered in acting on the notices are set forth in paragraph 7 of the Act (12 U.S.C. 1817(j)(7)).

The notices are available for immediate inspection at the Federal Reserve Bank indicated. Once the notices have been accepted for processing, they will also be available for inspection at the offices of the Board of Governors. Interested persons may express their views in writing to the Reserve Bank indicated for that notice or to the offices of the Board of Governors. Comments must be received not later than June 13, 1996.

A. Federal Reserve Bank of Kansas City (John E. Yorke, Senior Vice President) 925 Grand Avenue, Kansas City, Missouri 64198:

1. Randy W. and Karla L. Britt, both of Clifton Hill, Missouri; to acquire an additional .65 percent, for a total of 19.64 percent, and D. Wayne and Mary E. Britt, both of Callao, Missouri, to acquire an additional .19 percent, for a total of 5.98 percent, of the voting shares of RMB Bancshares, Inc., Marceline, Missouri, and thereby indirectly acquire Regional Missouri Bank, Marceline, Missouri.

Board of Governors of the Federal Reserve System, May 24, 1996.

Jennifer J. Johnson,

Deputy Secretary of the Board.

[FR Doc. 96–13652 Filed 5–30–96; 8:45 am]

BILLING CODE 6210–01–F

Formations of, Acquisitions by, and Mergers of Bank Holding Companies

The companies listed in this notice have applied to the Board for approval, pursuant to the Bank Holding Company Act of 1956 (12 U.S.C. 1841 *et seq*.) (BHC Act), Regulation Y (12 CFR part 225), and all other applicable statutes and regulations to become a bank holding company and/or to acquire the assets or the ownership of, control of, or the power to vote shares of a bank or bank holding company and all of the banks and nonbanking companies owned by the bank holding company, including the companies listed below.

The applications listed below, as well as other related filings required by the Board, are available for immediate inspection at the Federal Reserve Bank indicated. Once the application has been accepted for processing, it will also be available for inspection at the offices of the Board of Governors. Interested persons may express their views in writing on the standards enumerated in the BHC Act (12 U.S.C. 1842(c)). If the proposal also involves the acquisition of a nonbanking company, the review also includes whether the acquisition of the nonbanking company complies with the standards in section 4 of the BHC Act, including whether the acquisition of the nonbanking company can ''reasonably be expected to produce benefits to the public, such as greater convenience, increased competition, or gains in efficiency, that outweigh possible adverse effects, such as undue concentration of resources, decreased or unfair competition, conflicts of interests, or unsound banking practices'' (12 U.S.C. 1843). Any request for a hearing must be accompanied by a statement of the reasons a written presentation would not suffice in lieu of a hearing, identifying specifically any questions of fact that are in dispute, summarizing the evidence that would be presented at a hearing, and indicating how the party commenting would be aggrieved by approval of the proposal. Unless otherwise noted, nonbanking activities will be conducted throughout the United States.

Unless otherwise noted, comments regarding each of these applications must be received at the Reserve Bank indicated or the offices of the Board of Governors not later than June 24, 1996.

A. Federal Reserve Bank of Richmond (Lloyd W. Bostian, Jr., Senior Vice President) 701 East Byrd Street, Richmond, Virginia 23261:

1. MainStreet BankGroup Incorporated, Martinsville, Virginia; to acquire 100 percent of the voting shares of The First National Bank of Clifton Forge, Clifton Forge, Virginia.

B. Federal Reserve Bank of Minneapolis (James M. Lyon, Vice President) 250 Marquette Avenue, Minneapolis, Minnesota 55480:

1. Peterka Family Partnership, Miller, South Dakota; to become a bank holding company by acquiring 24.5 percent of the voting shares of M&H Financial Services, Inc., Miller, South Dakota, and thereby indirectly acquire First State Bank of Miller, Miller, South Dakota.

Board of Governors of the Federal Reserve System, May 24, 1996.

Jennifer J. Johnson,

Deputy Secretary of the Board.

[FR Doc. 96–13653 Filed 5–30–96; 8:45 am]

BILLING CODE 6210–01–F

Notice of Proposal to Engage in Nonbanking Activities.

Banc One Corporation, Columbus, Ohio, CoreStates Financial Corp, Philadelphia, Pennsylvania, PNC Bank Corp., Pittsburgh, Pennsylvania, National City Corporation, Cleveland, Ohio, and KeyCorp, Cleveland, Ohio, have given notice pursuant to section 4(c)(8) of the Bank Holding Company Act (12 U.S.C. 1843(c)(8)) (BHC Act) and section 225.23 of the Board's Regulation Y (12 CFR 225.23), to engage *de novo* through their joint venture subsidiary, Electronic Payment Services, Inc., Wilmington, Delaware (Company), in providing data processing services in connection with enhanced automated teller machine functions, enabling financial institutions to dispense: (1) public transportation tickets; (2) event and attraction tickets; (3) gift certificates; (4) prepaid phone cards; (5) other forms of alternate media that evidence a cardholder's prepayment for goods or services; and (6) other forms of alternate media, the dispensing of which is the automated equivalent of a customary banking activity. Company proposes to conduct these activities throughout the United States.

Section 4(c)(8) of the BHC Act provides that a bank holding company may, with Board approval, engage in any activity ''which the Board after due notice and opportunity for hearing has determined (by order or regulation) to be so closely related to banking or managing or controlling banks as to be a proper incident thereto....'' 12 U.S.C. 1843(c)(8). In publishing the proposal for comment, the Board does not take a position on issues raised by the proposal. Notice of the proposal is published solely in order to seek the views of interested persons on the issues presented by the notice, and does not represent a determination by the Board that the proposal meets or is likely to meet the standards of the BHC Act.

Any comments or requests for hearing should be submitted in writing and received by William W. Wiles, Secretary, Board of Governors of the Federal Reserve System, Washington, D.C. 20551, not later than June 17, 1996. Any request for a hearing on this proposal must, as required by section 262.3(e) of the Board's Rules of

Procedure (12 CFR 262.3(e)), be accompanied by a statement of the reasons why a written presentation would not suffice in lieu of a hearing, identifying specifically any questions of fact that are in dispute, summarizing the evidence that would be presented at a hearing, and indicating how the party commenting would be aggrieved by approval of the proposal. The notice may be inspected at the offices of the Board of Governors or the Federal Reserve Banks of Cleveland or Philadelphia.

Board of Governors of the Federal Reserve System, May 24, 1996.

Jennifer J. Johnson,

Deputy Secretary of the Board.

[FR Doc. 96–13651 Filed 5–30–96; 8:45 am]

BILLING CODE 6210–01–F

Notice of Proposals to Engage in Permissible Nonbanking Activities or to Acquire Companies that are Engaged in Permissible Nonbanking Activities

The companies listed in this notice have given notice under section 4 of the Bank Holding Company Act (12 U.S.C. 1843) (BHC Act) and Regulation Y, (12 CFR part 225) to engage *de novo,* or to acquire or control voting securities or assets of a company that engages either directly or through a subsidiary or other company, in a nonbanking activity that is listed in § 225.25 of Regulation Y (12 CFR 225.25) or that the Board has determined by Order to be closely related to banking and permissible for bank holding companies. Unless otherwise noted, these activities will be conducted throughout the United States.

Each notice is available for inspection at the Federal Reserve Bank indicated. Once the notice has been accepted for processing, it will also be available for inspection at the offices of the Board of Governors. Interested persons may express their views in writing on the question whether the proposal complies with the standards of section 4 of the BHC Act, including whether consummation of the proposal can ''reasonably be expected to produce benefits to the public, such as greater convenience, increased competition, or gains in efficiency, that outweigh possible adverse effects, such as undue concentration of resources, decreased or unfair competition, conflicts of interests, or unsound banking practices'' (12 U.S.C. 1843). Any request for a hearing on this question must be accompanied by a statement of the reasons a written presentation would not suffice in lieu of a hearing, identifying specifically any questions of fact that are in dispute, summarizing the evidence that would be presented at a hearing, and indicating how the party commenting would be aggrieved by approval of the proposal.

Unless otherwise noted, comments regarding the applications must be received at the Reserve Bank indicated or the offices of the Board of Governors not later than June 13, 1996.

A. Federal Reserve Bank of Atlanta (Zane R. Kelley, Vice President) 104 Marietta Street, N.W., Atlanta, Georgia 30303:

1. Newnan Holdings, Inc., Newnan, Georgia; to acquire Newnan Financial Services, Inc., Newnan, Georgia, and thereby engage in real estate appraisal services, including construction draw inspections, primarily for Newnan Savings Bank, but also to third parties, pursuant to § 225.25(b)(13) of the Board's Regulation Y. The geographic scope of this activity is throughout the State of Georgia.

B. Federal Reserve Bank of Kansas City (John E. Yorke, Senior Vice President) 925 Grand Avenue, Kansas City, Missouri 64198:

1. Farmers Enterprises, Inc., Albert, Kansas; to acquire Kinban, Inc., Kinsley, Kansas, and thereby engage in the sale of general insurance in a town of less than 5,000, pursuant to § 225.25(b)(8)(iii)(A) of the Board's Regulation Y.

Board of Governors of the Federal Reserve System, May 24, 1996.

Jennifer J. Johnson,

Deputy Secretary of the Board.

[FR Doc. 96–13654 Filed 5–30–96; 8:45 am]

BILLING CODE 6210–01–F

Board of Governors; Sunshine Meeting Notice

AGENCY HOLDING THE MEETING: Board of Governors of the Federal Reserve System.

TIME AND DATE: 10:00 a.m., Wednesday, June 5, 1996.

PLACE: Marriner S. Eccles Federal Reserve Board Building, C Street entrance between 20th and 21st Streets, N.W., Washington, D.C. 20551.

STATUS: Open.

MATTERS TO BE CONSIDERED: *Summary Agenda*: Because of its routine nature, no discussion of the following item is anticipated. This matter will be voted on without discussion unless a member of the Board requests that the item be moved to the discussion agenda.

1. Proposed amendments to Subpart A of Regulation S (Reimbursement for Providing Financial Records; Recordkeeping Requirements for Certain Financial Records) regarding reimbursement of certain costs incurred by financial institutions (proposed earlier for public comment; Docket No. R–0906).

2. Any items carried forward from a previously announced meeting.

Discussion Agenda: *PLEASE NOTE THAT NO DISCUSSION ITEMS ARE SCHEDULED FOR THIS MEETING.*

Note: If the items are moved from the Summary Agenda to the Discussion Agenda, discussion of the items will be recorded. Cassettes will then be available for listening in the Board's Freedom of Information Office, and copies can be ordered for $5 per cassette by calling (202) 452–3684 or by writing to: Freedom of Information Office, Board of Governors of the Federal Reserve System, Washington, D.C. 20551.

CONTACT PERSON FOR MORE INFORMATION: Mr. Joseph R. Coyne, Assistant to the Board; (202) 452–3204.

Dated: May 29, 1996.

William W. Wiles,

Secretary of the Board.

[FR Doc. 96–13784 Filed 05–29–96; 11:23 am]

BILLING CODE 6210–01–P

Board of Governors, Sunshine Meeting Notice

AGENCY HOLDING THE MEETING: Board of Governors of the Federal Reserve System.

TIME AND DATE: Approximately 10:15 a.m., Wednesday, June 5, 1996, following a recess at the conclusion of the open meeting.

PLACE: Marriner S. Eccles Federal Reserve Board Building, C Street entrance between 20th and 2lst Streets, NW., Washington, DC 20551.

STATUS: Closed.

MATTERS TO BE CONSIDERED:

1. Proposals regarding a Federal Reserve Bank's renovation.

2. Personnel actions (appointments, promotions, assignments, reassignments, and salary actions) involving individual Federal Reserve System employees.

3. Any items carried forward from a previously announced meeting.

CONTACT PERSON FOR MORE INFORMATION: Mr. Joseph R. Coyne, Assistant to the Board; (202) 452–3204. You may call (202) 452–3207, beginning at approximately 5 p.m. two business days before this meeting, for a recorded announcement of bank and bank holding company applications scheduled for the meeting.

Dated: May 29, 1996.

William W. Wiles,

Secretary of the Board.

[FR Doc. 96–13785 Filed 5–29–96; 11:23 am]

BILLING CODE 6210–01–P

DEPARTMENT OF HEALTH AND HUMAN SERVICES

Centers for Disease Control and Prevention

[Announcement Number 657]

National Institute for Occupational Safety and Health; Intervention Studies for Construction Safety and Health; Notice of Availability of Funds for Fiscal Year 1996

Introduction

The Centers for Disease Control and Prevention (CDC), National Institute for Occupational Safety and Health (NIOSH), announces that applications are being accepted for intervention projects relating to occupational safety and health in the construction industry. Such projects are intended to develop and evaluate the effectiveness of methods or approaches for preventing illnesses and injuries among construction workers. Thus, this announcement is not intended for traditional hypothesis-testing research projects to identify and investigate the relationships between health outcomes and occupational exposures to hazardous agents.

CDC is committed to achieving the health promotion and disease prevention objectives of ''Healthy People 2000,'' a national activity to reduce morbidity and mortality and improve the quality of life. This announcement is related to the priority area of ''Occupational Safety and Health.'' (For ordering a copy of ''Healthy People 2000,'' see the section ''WHERE TO OBTAIN ADDITIONAL INFORMATION.'')

Authority

This program is authorized under section 20(a) of the Occupational Safety and Health Act of 1970, (29 U.S.C. 669(a)), and section 301(a) of the Public Health Service Act, (42 U.S.C. 241(a)), as amended. The applicable program regulation is 42 CFR Part 52.

Eligible Applicants

Eligible applicants include non-profit and for-profit organizations, universities, colleges, research institutions, and other public and private organizations, including State and local governments and small, minority and/or woman-owned businesses.

Smoke-Free Workplace

CDC strongly encourages all grant recipients to provide a smoke-free workplace and promote the non-use of all tobacco products, and Public Law 103–227, the Pro-Children Act of 1994, prohibits smoking in certain facilities that receive Federal funds in which education, library, day care, health care, and early childhood development services are provided to children.

Availability of Funds

About $750,000 is available in fiscal year (FY) 1996 to fund approximately 4 to 5 project grants. The amount of funding available may vary and is subject to change. Awards are anticipated to range from $150,000 to $200,000 in total costs (direct and indirect) per year. Awards are expected to begin on or about September 30, 1996. Awards will be made for a 12-month budget period within a project period not to exceed 3 years. Continuation awards within the project period will be made on the basis of satisfactory progress and availability of funds.

Purpose

NIOSH seeks to prevent work-related diseases and injuries in the construction industry by designing, implementing, and evaluating measures to reduce occupational hazards. If prevention measures are not currently available, new technologies should be developed for controlling hazardous exposures. Such new technologies must be evaluated to determine that the prevention measures are feasible, even for smaller businesses. Intervention research, of which control technology is a part, examines the utility and impact of new and existing preventive measures in the workplace.

Programmatic Interest

The focus of these grants should facilitate progress in preventing adverse effects among construction workers. A project that is proposed to develop or test the efficacy of an intervention should be designed to establish, discover, develop, elucidate, or confirm information relating to occupational safety and health, including innovative methods, techniques, and approaches for solving occupational safety and health problems.

A project that is proposed to demonstrate the effectiveness of an intervention should address, either on a pilot or full-scale basis, the technical or economic feasibility of implementing a new/improved innovative procedure, method, technique, or system for preventing occupational safety or health problems. A demonstration project should be conducted in an actual workplace where a baseline measure of the occupational problem will be defined, the new/improved approach will be implemented, a follow-up measure of the problem will be documented, and an evaluation of the benefits will be conducted.

The overall NIOSH program priorities, including those related to the construction industry, were developed by NIOSH and its partners in the public and private sectors to provide a framework to guide occupational safety and health research in the next decade—not only for NIOSH but also for the entire occupational safety and health community. Approximately 500 organizations and individuals outside NIOSH provided input into the development of the National Occupational Research Agenda (NORA). This attempt to guide and coordinate research nationally is responsive to a broadly perceived need to address systematically those topics that are most pressing and most likely to yield gains to the worker and the nation. Fiscal constraints on occupational safety and health research are increasing, making even more compelling the need for a coordinated and focused research agenda. NIOSH intends to support projects that facilitate progress in understanding and preventing adverse effects among workers.

The Agenda identifies 21 research priorities. These priorities reflect a remarkable degree of concurrence among a large number of stakeholders. The NORA priority research areas are grouped into three categories: Disease and Injury, Work Environment and Workforce, and Research Tools and Approaches. The NORA document is available through the NIOSH Home Page; http://www.cdc.gov/niosh/nora.html.

Consistent with NORA, the following are high priority directions for research under this announcement. Investigators may also apply in other areas related to construction safety and health, but the rationale for the significance of the research and demonstrations to construction must be developed in the application.

1. Understand how economic issues impact the acceptance of best safety practices.

2. Understand the aspects of changing the safety culture in organizations, including residential and other small contractors.

3. Improve the health and safety aspects of construction tools and of general technology development/utilization.

4. Identify effective ways to obtain information and conduct research on non-union workers and contractors.

5. Identify training techniques that are effective in causing safe work practices to be adopted.

6. Investigate mechanisms that lead to nongovernmental support/funding for regional training and safety and health services.

7. Investigate new concepts for job-site improvement (such as scheduling of deliveries, material location and transport in vehicular worker traffic patterns, etc.).

8. Identify causes of dramatic differences in regional injury rates for both small and large firms, as well as union and non-union operations.

9. Select focus areas that will be of perceived immediate benefit to the customers. (Based upon achievable benchmarks in construction safety and health, the NIOSH program priorities applicable to this Program Announcement are to reduce construction-related deaths, lost-time injuries and illnesses, back injuries, eye injuries, skin disorders or diseases, lead poisonings, hearing loss, silicosis, and asbestosis.)

Potential applicants with questions concerning the acceptability of their proposed work are strongly encouraged to contact the technical information contact listed in this announcement in the section ''WHERE TO OBTAIN ADDITIONAL INFORMATION.''

Evaluation Criteria

Upon receipt, applications will be reviewed by CDC for completeness and responsiveness. Applications determined to be incomplete or unresponsive to this announcement will be returned to the applicant without further consideration. If the proposed project involves organizations or persons other than those affiliated with the applicant organization, letters of support and/or cooperation must be included.

Applications that are complete and responsive to the announcement will be reviewed by an initial review group in which applications will be determined to be competitive or non-competitive based on their technical merit relative to other applications received. Applications determined to be non-competitive will be withdrawn from further consideration and the principal investigator/program director and the official signing for the applicant organization will be promptly notified. Applications judged to be competitive will be discussed and assigned a priority score.

Review criteria for technical merit are as follows:

1. Technical significance and originality of proposed project.

2. Appropriateness and adequacy of the study design and methodology proposed to carry out the project.

3. Qualifications and research experience of the Principal Investigator and staff, particularly but not exclusively in the area of the proposed project.

4. Availability of resources necessary to perform the project.

5. Documentation of cooperation from industry, unions, or other participants in the project, where applicable.

6. Adequacy of plans to include both sexes and minorities and their subgroups as appropriate for the scientific goals of the project. (Plans for the recruitment and retention of subjects will also be evaluated.)

7. Appropriateness of budget and period of support.

8. Human Subjects—Procedures adequate for the protection of human subjects must be documented. Recommendations on the adequacy of protections include: (1) protections appear adequate and there are no comments to make or concerns to raise, (2) protections appear adequate, but there are comments regarding the protocol, (3) protections appear inadequate and the Objective Review Group (ORG) has concerns related to human subjects, or, (4) disapproval of the application is recommended because the research risks are sufficiently serious and protection against the risks are inadequate as to make the entire application unacceptable.

Secondary review criteria for programmatic importance are as follows:

1. Results of the initial review.

2. Magnitude of the problem in terms of numbers of workers affected.

3. Severity of the disease or injury in the worker population.

4. Usefulness to applied technical knowledge in the evaluation, or control of construction safety and health hazards.

5. Degree to which the project can be expected to yield or demonstrate results that will be useful on a national or regional basis.

Applicants will compete for available funds with all other approved applications. The following will be considered in making funding decisions:

1. Quality of the proposed project as determined by peer review.

2. Availability of funds.

3. Program balance among priority areas of the announcement.

Executive Order 12372 Review

Applications are not subject to the review requirements of Executive Order 12372, entitled Intergovernmental Review of Federal Programs.

Public Health System Reporting Requirement

This program is not subject to the Public Health System Reporting Requirements.

Catalog of Federal Domestic Assistance Number

The Catalog of Federal Domestic Assistance number is 93.262.

Other Requirements

Paperwork Reduction Act

Projects that involve the collection of information from 10 or more individuals and funded by the grant will be subject to review and approval by the Office of Management and Budget (OMB) under the Paperwork Reduction Act.

Human Subjects

The applicant must comply with the Department of Health and Human Services Regulations, 45 CFR Part 46, regarding the protection of human subjects. Assurances must be provided to demonstrate that the project will be subject to initial and continuing review by an appropriate institutional review committee. The applicant will be responsible for providing assurance in accordance with the appropriate guidelines and forms provided in the application kit.

Women and Racial and Ethnic Minorities

It is the policy of the CDC to ensure that women and racial and ethnic groups will be included in CDC supported research projects involving human subjects, whenever feasible and appropriate. Racial and ethnic groups are those defined in OMB Directive No. 15 and include American Indian, Alaskan Native, Asian, Pacific Islander, Black and Hispanic. Applicants shall ensure that women and racial and ethnic minority populations are appropriately represented in applications for research involving human subjects. Where clear and compelling rationale exist that inclusion is not feasible, this situation must be explained as part of the application. In conducting the review of applications for scientific merit, review groups will evaluate proposed plans for inclusion of minorities and both sexes as part of the

scientific assessment and assigned score. This policy does not apply to research studies when the investigator cannot control the race, ethnicity and/or sex of subjects. Further guidance to this policy is contained in the Federal Register, Vol. 60, No. 179, Friday, September 15, 1995, pages 47947–47951.

Application Submission and Deadlines

A. Preapplication Letter of Intent

Although not a prerequisite of application, a non-binding letter of intent-to-apply is requested from potential applicants. The letter should be submitted to the Grants Management Officer (whose address is reflected in section B, ''Applications''). It should be postmarked no later than June 28, 1996. The letter should identify the announcement number, name of principal investigator, and specify the priority area to be addressed by the proposed project. The letter of intent does not influence review or funding decisions, but it will enable CDC to plan the review more efficiently, and will ensure that each applicant receives timely and relevant information prior to application submission.

B. Applications

Applicants should use Form PHS–398 (OMB Number 0925–0001) and adhere to the ERRATA Instruction Sheet for Form PHS–398 contained in the Grant Application Kit. Please submit an original and five copies on or before July 26, 1996 to: Ron Van Duyne, Grants Management Officer, Grants Management Branch, Procurement and Grants Office, Centers for Disease Control and Prevention (CDC), 255 East Paces Ferry Road, NE., Room 321, MS-E13, Atlanta, GA 30305.

C. Deadlines

1. Applications shall be considered as meeting a deadline if they are either:

A. Received at the above address on or before the deadline date, or

B. Sent on or before the deadline date to the above address, and received in time for the review process. Applicants should request a legibly dated U.S. Postal Service postmark or obtain a legibly dated receipt from a commercial carrier or the U.S. Postal Service. Private metered postmarks shall not be accepted as proof of timely mailings.

2. Applications which do not meet the criteria above are considered late applications and will be returned to the applicant.

Where To Obtain Additional Information

To receive additional written information call (404) 332–4561. You will be asked your name, address, and phone number and will need to refer to Announcement 657. You will receive a complete program description, information on application procedures, and application forms. In addition, this announcement is also available through the CDC Home Page on the Internet. The address for the CDC Home Page is http://www.cdc.gov. If you have questions after reviewing the contents of all the documents, business management technical assistance may be obtained from Georgia Jang, Grants Management Specialist, Grants Management Branch, Procurement and Grants Office, Centers for Disease Control and Prevention (CDC), 255 East Paces Ferry Road, NE., MS–E13, Atlanta, GA 30305, telephone (404) 842–6796; fax: 404–842–6513; internet: glj2@opspgo1.em.cdc.gov. Programmatic technical assistance may be obtained from Roy M. Fleming, Sc.D., Associate Director for Grants, National Institute for Occupational Safety and Health, Centers for Disease Control and Prevention (CDC), 1600 Clifton Road, NE., Building 1, Room 3053, MS–D30, Atlanta, GA 30333, telephone (404) 639–3343; fax: 404–639–4616; internet: rmf2@niood1.em.cdc.gov.

There may be delays in mail delivery as well as difficulty in reaching the CDC Atlanta offices during the 1996 Summer Olympics (July 19–August 4). Therefore, in order to receive more timely response to questions please use INTERNET/E-Mail, follow all instructions in this announcement and leave messages on the contact person's voice mail.

Please refer to announcement number 657 when requesting information and submitting an application.

Potential applicants may obtain a copy of ''Healthy People 2000'' (Full Report, Stock No. 017–001–00474–0) or ''Healthy People 2000'' (Summary Report, Stock No. 017–001–00473–1) through the Superintendent of Documents, Government Printing Office, Washington, DC 20402–9325, telephone (202) 512–1800.

Dated: May 24, 1996.

Donald L. Holderman,

Acting Director, National Institute for Occupational Safety and Health Centers for Disease Control and Prevention (CDC).

[FR Doc. 96–13676 Filed 5–30–96; 8:45 am]

BILLING CODE 4163–19–P

[Announcement 660]

Tuberculin Skin Testing Demonstration Projects; and Evaluation of Counseling and Testing of Tuberculosis Patients for Human Immunodeficiency Virus Infection and Reporting of Test Results

Introduction

The Centers for Disease Control and Prevention (CDC) announces the availability of fiscal year (FY) 1996 funds for a cooperative agreement program for two projects: (1) Tuberculin Skin Testing (TST) Demonstration Projects; and (2) Evaluation of Counseling and Testing of Tuberculosis (TB) Patients for Human Immunodeficiency Virus (HIV) Infection and Reporting of Test Results.

CDC is committed to achieving the health promotion and disease prevention objectives of ''Healthy People 2000,'' a national activity to reduce morbidity and mortality and improve the quality of life. This announcement is related to the priority areas of HIV Infection and Immunization and Infectious Diseases. (To order a copy of ''Healthy People 2000,'' see the section ''WHERE TO OBTAIN ADDITIONAL INFORMATION.'')

Authority

This program is authorized under Section 317E of the Public Health Service Act [42 U.S.C. 247b-6], as amended.

Smoke-Free Workplace

CDC strongly encourages all grant recipients to provide a smoke-free workplace and to promote the non-use of all tobacco products, and Public Law 103–227, the Pro-Children Act of 1994, prohibits smoking in certain facilities that receive Federal funds in which education, library, day care, health care, and early childhood development services are provided to children.

Eligible Applicants

Eligible applicants are the official public health agencies of States and local governments or their bona fide agents. This includes the District of Columbia, American Samoa, the Commonwealth of Puerto Rico, the Virgin Islands, the Federated States of Micronesia, Guam, the Northern Mariana Islands, the Republic of the Marshall Islands, the Republic of Palau, and federally recognized Indian tribal governments.

Availability of Funds

Tuberculin Skin Testing Demonstration Projects

Approximately $750,000 is available in FY 1996 to fund approximately 8–10 awards. It is expected that the average award will be $75,000, ranging from $50,000–$200,000. Funding estimates are subject to change. It is expected that awards will begin on or about September 1, 1996, and will be made for a 12-month budget period within a project period of up to 2 years. Funding estimates may vary and are subject to change.

Continuation awards within the project period will be made on the basis of satisfactory progress and the availability of funds.

Evaluation of Counseling and Testing of TB Patients for HIV Infection and Reporting of Test Results

Approximately $750,000 per year is available in FY 1996 to fund approximately 4–6 awards. It is expected that the average award will be $125,000, ranging from $100,000–$200,000. Funding estimates are subject to change. It is expected that awards will begin on or about September 1, 1996, and will be made for a 12-month budget period within a project period of up to 2 years. Funding estimates may vary and are subject to change.

Continuation awards within the project period will be made on the basis of satisfactory progress and the availability of funds.

Purpose

The purpose of the TST Demonstration Projects is: (1) Develop model TST programs in health departments and health care facilities; (2) track and monitor TST data and TB infections among health care workers; and (3) pilot a microcomputer software system developed by CDC to assist in the collection , tracking, management, and analysis of occupational TB exposures and infections.

The purpose of the Evaluation of Counseling and Testing of TB Patients for HIV Infection and Reporting of Test Results is: (1) To assess current HIV counseling and testing practices for TB patients; (2) to evaluate the extent to which TB patients are receiving counseling and testing; (3) to characterize TB patients who are not being tested and barriers to testing; (4) to evaluate the extent to which HIV results on TB patients known to be coinfected are reported to the State or local health department TB program; and (5) to characterize patients who were tested but are not being reported to the State or local health department TB program, and barriers to reporting HIV test results.

This project is intended to assist State and local TB control and AIDS programs to: (1) identify barriers to HIV counseling and testing of TB patients and to sharing data between TB and AIDS programs; and (2) develop guidelines and initiate programs that will overcome these barriers within the health department and the provider community.

Program Requirements

In conducting activities to achieve the purpose of the TST Demonstration Projects, the recipient shall be responsible for the activities listed under A. (Recipient Activities), and CDC will be responsible for the activities under B. (CDC Activities):

A. Recipient Activities

1. Conduct a program for health department personnel with direct patient contact or contract with a hospital to perform TST of hospital employees. In conducting the program the applicant will perform skin testing at one or more health department facilities or hospitals where health care workers (HCWs) are potentially exposed to TB.

Where employees have been exposed, the applicant will:

a. Perform contact investigations of HCWs exposed to an infectious TB patient who was not recognized and appropriately isolated.

b. Collect information on the circumstances surrounding these HCW exposures.

c. Initiate appropriate TST for exposed HCWs, including baseline and follow-up testing.

d. Clinically evaluate all employees with a TST conversion.

The applicant in performing the TST program for employees on a routine basis will be required to:

a. Use a two-step Mantoux test for all initial tests to minimize the likelihood of interpreting a boosted reaction as a true conversion due to recent infection.

b. Place and read a TB skin test on all HCWs. This will include measures or incentives likely to enhance workers' compliance with such testing.

c. Perform subsequent Mantoux testing annually (or more frequently if appropriate for the level of risk in the occupational group or facility) of all employees whose initial skin tests were negative.

d. Directly observe the reading of the TB skin test (in mm of induration) by personnel trained in correct placement and reading of Mantoux skin tests.

e. Confidentially assess potential pertinent demographic factors, (such as, gender, race/ethnicity, country of birth, and history of receipt of Bacille Calmette-Guerin) and occupational factors, (such as, occupation and worksite) which may place HCWs at risk for TB exposure.

2. Use CDC-developed software to assist in the collection, tracking, management, and analysis of data from TST programs.

3. Follow CDC guidelines for TST. A copy of the guidelines will be included in the application kit.

4. Implement a research protocol jointly developed with CDC for the TST demonstration project.

5. Use CDC-developed skin test software to enter all TST information onto the software and send a diskette of the database to CDC on a monthly basis.

6. Develop forms appropriate to their sites for the collection of data including HCW's demographics, occupational information, TST information, and results of follow-up clinical evaluations for persons with reactive skin tests.

7. Ensure that all data are kept confidential and in secured files.

B. CDC Activities

1. Jointly develop a research protocol for the TST demonstration project.

2. Provide technical assistance in implementation of the TST program.

3. Provide one or more versions of microcomputer software for use in the project.

4. Train health department personnel in the use of the software.

5. Develop a plan for data management and for data transfer to CDC.

6. Review site performance and ensure compliance with the study protocol.

7. Conduct data analysis and summarize and present findings.

In conducting activities to achieve the purpose of the Evaluation of Counseling and Testing of TB Patients for HIV Infection and Reporting of Test Results, the recipient shall be responsible for the activities listed under A. (Recipient Activities), and CDC will be responsible for the activities under B. (CDC Activities):

A. Recipient Activities

1. Provide a joint training session to personnel from TB and AIDS programs in local and State health departments. Training will include the latest CDC recommendations for TB prevention and control, the reasons for collaboration between the two groups, surveillance mechanisms and definitions, the importance of and methods for

maintaining confidentiality and availability of services for counseling, testing, and treating HIV-infected TB patients.

2. Assess current practices and policies of TB care providers who have reported cases to the health department in the past year, including policies and practices for HIV counseling and testing of TB patients, availability of services for coinfected patients, referral for services, reporting of coinfected patients, and perceived barriers to testing and reporting.

3. Implement a study protocol, developed jointly with CDC, to determine by medical record review whether TB patients, age 25–44 years, were offered HIV counseling and testing, the results of such testing, whether patients were questioned about HIV risk factors, missed opportunities for counseling and testing, and whether HIV-positive patients were referred for HIV-related services. If HIV status was known to the TB care provider, document the effect of this knowledge on TB care and on contact investigations. Other possible sources of documentation of HIV counseling and testing may include matching with the AIDS registry and the HIV reporting registry, HIV counseling and testing records, sexually transmitted disease registries and other public health records depending on availability and local confidentiality requirements. For patients whose HIV test results were already reported to the TB program, the medical record review will ascertain their mechanism through which the HIV results was reported and their subsequent HIV service referrals.

4. Evaluate the completeness of the TB surveillance system by matching the AIDS and TB registries.

5. Ensure that all data are kept confidential and in secured files.

6. Based on the results of above evaluations, describe barriers to providing HIV counseling and testing to TB patients and to reporting HIV results to the TB program. Make recommendations and initiate programs to overcome identified barriers and to improve coverage of HIV counseling and testing, reporting of HIV test results and provision of services (or referral for services) for coinfected patients.

7. Participate in two meetings to be held in Atlanta, GA, each one day in length, one each year of the project, with other study participants and staff from the Division of TB Elimination and the Division of HIV/AIDS Prevention, CDC.

B. CDC Activities

1. Provide assistance in developing a protocol for conducting the Recipient Activities described above.

2. Plan and organize the annual meetings for recipient representatives and staff from the Division of TB Elimination and the Division of HIV/AIDS Prevention, CDC .

3. Provide technical consultation as needed for training, implementing the protocol, and interpreting and using the results of the project.

4. Review site performance and ensure compliance with the study protocol.

5. Assist with data management.

Evaluation Criteria

Applications for the Tuberculin Skin Testing Demonstration Projects will be reviewed and evaluated according to the following criteria (100 points maximum):

A. The extent of the problem of TB, HIV, MDR TB, and TB/AIDS in the applicant's area. (10 Points)

B. The extent to which an efficient and effective TST program exists in the facility proposed for the project. This includes the compliance rate with the TST testing program. If compliance rates are sub-optimal, the extent to which the applicant's plan for improving compliance during the project period is likely to succeed. In addition, the degree to which the applicant has met the CDC Policy requirements regarding the inclusion of women, ethnic, and racial groups in the proposed research. Specifically the following items will be addressed:

a. The proposed plan for the inclusion of both sexes and racial and ethnic minority populations for appropriate representation.

b. The appropriateness of the proposed justification when representation is limited or absent.

c. Whether the design of the study is adequate to measure differences when warranted.

d. Whether the plans for recruitment and outreach for study participants include the process of establishing partnerships with community(ies) and recognition of mutual benefits is documented. (30 Points)

C. Agreement by the applicant to pilot test CDC-developed software and provide diskettes of the database to CDC on a monthly basis. The extent to which the applicant's data management plan demonstrates an ability to ensure the integrity of the data. (30 Points)

D. The extent to which the applicant describes how the study will be administered, including the size, qualifications, duties and responsibilities, and time allocation of the proposed staff, the availability of the facilities to be used, and a schedule for accomplishing the activities, including time frames. If a contract with a hospital is proposed, a letter of support must be included. (30 Points)

E. Other (Not Scored)

Budget

Consideration will be given to the extent to which the budget is reasonable, clearly justifiable, and consistent with the intended use of funds.

Human Subjects

Procedures adequate for the protection of human subjects must be documented: (1) Protections appear adequate and there are no comments to make or concerns to raise, (2) protections appear adequate, but there are comments regarding the protocol, (3) protections appear inadequate and the Objective Review Group (ORG) has concerns related to human subjects, or (4) disapproval of the application is recommended because the research risks are sufficiently serious and protection against the risks are inadequate resulting in unacceptability of the entire application.

Applications for the Evaluation of Counseling and Testing of TB Patients for HIV Infection and Reporting of Test Results will be reviewed and evaluated according to the following criteria (100 points maximum):

A. Understanding the problem (10 points).

B. Plan for required activities. In addition, the degree to which the applicant has met the CDC Policy requirements regarding the inclusion of women, ethnic, and racial groups in the proposed research. Specifically the following items will be addressed:

a. The proposed plan for the inclusion of both sexes and racial and ethnic minority populations for appropriate representation.

b. The appropriateness of the proposed justification when representation is limited or absent.

c. Whether the design of the study is adequate to measure differences when warranted.

d. Whether the plans for recruitment and outreach for study participants include the process of establishing partnerships with community(ies) and recognition of mutual benefits is documented. (50 points)

C. Collaboration (10 points).

D. Experience in related activities (10 points).

E. Personnel and management plan (20 points).

F. Other (Not Scored).

Budget

Consideration will be given to the extent to which the budget is reasonable, clearly justifiable, and consistent with the intended use of funds.

Human Subjects

Procedures adequate for the protection of human subjects must be documented: (1) Protections appear adequate and there are no comments to make or concerns to raise, (2) protections appear adequate, but there are comments regarding the protocol, (3) protections appear inadequate and the Objective Review Group (ORG) has concerns related to human subjects, or (4) disapproval of the application is recommended because the research risks are sufficiently serious and protection against the risks are inadequate resulting in unacceptability of the entire application.

Funding Priority

Funding priority for the Tuberculin Skin Testing Demonstration Projects may be given to ensure geographic balance, urban and rural balance, high and low prevalence of HIV infection, and high and low TB morbidity areas.

Funding Priority for the Evaluation of Counseling and Testing of TB Patients for HIV Infection and Reporting of Test Results will be given to applicants that demonstrate a need to improve HIV counseling and testing of TB patients and reporting of test results. Funding priority also may be given to ensure a geographic balance, urban and rural high and low prevalence of HIV infection and high and low TB morbidity.

Interested persons are invited to comment on the proposed funding priority. All comments received on or before July 1, 1996, will be considered before final funding priority is established. If the funding priority should change as a result of any comments received, a revised announcement will be published in the Federal Register and revised applications will be accepted prior to the final selection of awards. Written comments should be addressed to: Van Malone, Grants Management Officer, Grants Management Branch, Procurement and Grants Office, Centers for Disease Control and Prevention (CDC), 255 East Paces Ferry Road, NE., Room 300, Mailstop E–15, Atlanta, GA 30305.

Executive Order 12372 Review

Applications are subject to Intergovernmental Review of Federal Programs as governed by Executive Order (E.O.) 12372. E.O. 12372 sets up a system for State and local government review of proposed Federal assistance applications. Applicants (other than federally recognized Indian tribal governments) should contact their State Single Point of Contact (SPOC) as early as possible to alert them to the prospective applications and receive any necessary instructions on the State process. For proposed projects serving more than one State, the applicant is advised to contact the SPOC for each affected State. A current list of SPOCs is included in the application kit. If SPOCs have any State process recommendations on applications submitted to CDC, they should send them to Van Malone, Grants Management Officer, Grants Management Branch, Procurement and Grants Office, Centers for Disease Control and Prevention (CDC), 255 East Paces Ferry Road, NE., Room 300, Mailstop E–15, Atlanta, GA 30305, not later than 60 days after the application deadline date. The Program Announcement Number and Program Title should be referenced on the document. CDC does not guarantee to ''accommodate or explain'' State process recommendations it receives after that date. Indian tribes are strongly encouraged to request tribal government review of the proposed application. If tribal governments have any tribal process recommendations on applications submitted to CDC, they should forward them to Van Malone, Grants Management Officer, Grants Management Branch, Procurement and Grants Office, Centers for Disease Control and Prevention (CDC), 255 East Paces Ferry Road, NE., Room 300, Mailstop E–15, Atlanta, GA 30305. This should be done no later than 60 days after the application deadline date. CDC does not guarantee to ''accommodate or explain '' for tribal process recommendations it receives after that date.

Public Health System Reporting Requirements

This program is not subject to the Public Health System Reporting Requirements.

Catalog of Federal Domestic Assistance Number

The Catalog of Federal Domestic Assistance Number is 93.947, TB Demonstration, Research, Public and Professional Education Projects.

Other Requirements

Paperwork Reduction Act: Projects that involve the collection of information from 10 or more individuals and funded by the cooperative agreement will be subject to review and approval by the Office of Management and Budget (OMB) under the Paperwork Reduction Act.

Confidentiality: Applicants must have in place systems to ensure the confidentiality of all patient records.

Human Subjects: The applicant must comply with the Department of Health and Human Services Regulations, 45 CFR Part 46, regarding the protection of human subjects. Assurances must be provided to demonstrate that the project will be subject to initial and continuing review by an appropriate institutional review committee. The applicant will be responsible for providing assurance in accordance with the appropriate guidelines and forms provided in the application kit.

In addition to other applicable committees, Indian Health Service (IHS) institutional review committees also must review the project if any component of the IHS will be involved or will support the research. If any American Indian community is involved, its tribal government must also approve that portion of the project applicable to it.

Women, Racial and Ethnic Minorities: It is the policy of the CDC to ensure that women and racial and ethnic groups will be included in CDC-supported research projects involving human subjects, whenever feasible and appropriate. Racial and ethnic groups are those defined in OMB Directive No. 15 and include American Indian, Alaska Native, Asian, Pacific Islander, Black and Hispanic. Applicants shall ensure that women, racial and ethnic minority populations are appropriately represented in applications for research involving human subjects. Where clear and compelling rationale exist that inclusion is inappropriate or not feasible, this situation must be explained as part of the application. This policy does not apply to research studies when the investigator cannot control the race, ethnicity and/or sex of subjects. Further guidance to this policy is contained in the Federal Register, Vol. 60, No. 179, Friday, September 15, 1995, pages 47947–47951 (a copy is included in the application kit).

Pre- and Post-test Counseling and Partner Notification: Recipients are required to provide HIV antibody testing to determine a person's HIV infection status; therefore, they must comply with State laws and regulations and CDC

guidelines regarding pre- and post-test counseling and partner notification of HIV-seropositive patients. A copy of the guidelines will be included in the application kit. Recipients must also comply with State and local health department requirements relating to specific reportable diseases or conditions. Recipients must provide referrals for HIV diagnosis and treatment.

HIV/AIDS Requirements: Recipients must comply with the document entitled ''Content of AIDS-Related Written Materials, Pictorials, Audiovisuals, Questionnaires, Survey Instruments, and Educational Sessions'' (June 1992), a copy of which is included in the application kit. In complying with the requirements for a program review panel, recipients are encouraged to use an existing program review panel such as the one created by the State health department's HIV/AIDS prevention program. If the recipient forms its own program review panel, at least one member must be an employee (or a designated representative) of a government health department consistent with the Content guidelines. The names of the review panel members must be listed on the Assurance of Compliance form (CDC 0.1113), which is included in the application kit.

Application Submission and Deadline

The original and two copies of the application must be submitted to: Van Malone, Grants Management Officer, Grants Management Branch, Procurement and Grants Office, Centers for Disease Control and Prevention (CDC), 255 East Paces Ferry Road, NE., Room 300, Mailstop E–15, Atlanta, GA 30305, on or before July 29, 1996.

1. *Deadline:* Applications shall be considered as meeting the deadline if they are either:

(a) Received on or before the deadline date, or

(b) Sent on or before the deadline date and received in time for submission to the objective review committee. (Applicants must request a legibly dated U.S. Postal Service postmark or obtain a legibly dated receipt from a commercial carrier or U.S. Postal Service. Private metered postmarks shall not be acceptable as proof of timely mailing.)

2. *Late Applications:* Applications that do not meet the criteria in 1.(a) or 1.(b) are considered late applications. Late applications will not be considered in the current competition and will be returned to the applicant.

Where to Obtain Additional Information

Business management technical assistance may be obtained from Juanita Dangerfield, Grants Management Specialist, at telephone (404) 842–6577, fax: (404) 842–6513, or INTERNET address: <jdd2@opspgo1.em.cdc.gov>.

Programmatic technical assistance may be obtained from Eugene McCray, M.D., Division of Tuberculosis Elimination, at telephone (404) 639–8117.

Potential applicants may obtain a copy of ''Healthy People 2000'' (Full Report, Stock No. 017–001–00474–0) or ''Healthy People 2000'' (Summary Report, Stock No. 017–001–00473–1) referenced in the ''INTRODUCTION'' through the Superintendent of Documents, Government Printing Office, Washington, DC 20402–9325, telephone (202) 512–1800.

Atlanta, Georgia, will be the host of the 1996 Summer Olympics Games (July 19 through August 4, 1996). As a result of this event, it is likely that the Procurement and Grants Office (PGO) may experience delays in the receipt of both regular and overnight mail deliveries. Contacting PGO employees during this time frame may also be hindered due to the possible telephone disruptions.

To the extent authorized, please consider the use of voice mail, e-mail, and facsimile transmissions to the maximum extent practicable. Please do not fax lengthy documents or grant applications.

This announcement will be available on one of two Internet sites on the publication date: CDC's home page at http://www.cdc.gov, or at the Government Printing Office home page (including free access to the Federal Register) at http://www.access.gpo.gov.

Dated: May 24, 1996.

Joseph R. Carter,

Acting Associate Director for Management and Operations, Centers for Disease Control and Prevention (CDC).

[FR Doc. 96–13675 Filed 5–30–96; 8:45 am]

BILLING CODE 4163–18–P

Food and Drug Administration

[Docket No. 96D–0148]

Medical Devices; Medical Device User Facility and Distributor Reporting; Guidance Documents; Availability

AGENCY: Food and Drug Administration, HHS.

ACTION: Notice.

SUMMARY: The Food and Drug Administration (FDA) is announcing the availability of three guidance documents entitled ''Medical Device Reporting: An Overview,'' ''Medical Device Reporting for User Facilities,'' and ''Medical Device Reporting for Distributors.'' These guidance documents provide information to help facilitate compliance with the agency's Medical Device Reporting (MDR) requirements. The agency is also announcing the availability of the following final MDR reporting forms: FDA Form 3419, Semiannual User Facility Report; FDA Form 3417, Baseline Report; and FDA Form 3381, Annual Certification. Elsewhere in this issue of the Federal Register, FDA is publishing a notice of availability of, and requesting comments on, a draft guidance document focusing on reporting by manufacturers.

DATES: Written comments on the guidance documents may be submitted at any time.

ADDRESSES: Submit written comments on the three guidance documents to the Dockets Management Branch (HFA–305), Food and Drug Administration, 12420 Parklawn Dr., rm. 1–23, Rockville, MD 20857. Comments on the three guidance documents should be kept separate and identified by their respective titles. Requests and comments should be identified with the docket number found in brackets in the heading of this document. A copy of the guidance documents and received comments are available for public examination in the Dockets Management Branch between 9 a.m. and 4 p.m., Monday through Friday.

Persons interested in obtaining copies of the guidance documents and reporting forms may use the World Wide Web. FDA's home page address may be accessed at http://www.fda.gov and then select the Medical Devices and Radiological Health option. Next, select the program areas option and scroll down to Medical Device Reporting. The documents will be listed and available for downloading.

Anyone with a video terminal or personal computer with a modem can obtain these documents from the electronic docket administered by DSMA (1–800–252–1366 or 1–301–594–2741) by making the following menu choices: 5–Postmarket Surveillance; 2–Medical Device Reports—Policies/Guidelines.

Individuals unable to use the above two options may request information about obtaining paper copies of these documents through the CDRH Facts-on-Demand system by dialing 1–800–899–

0381 or 1–301–827–0111. After following the voice prompts, request document number 799. FDA has arranged to have other government, industry, and health care organizations provide paper copies of these documents for a fee that each organization will set for itself.

FOR FURTHER INFORMATION CONTACT: Earl W. Robinson, Center for Devices and Radiological Health (HFZ–530), Food and Drug Administration, 1350 Piccard Dr., Rockville, MD 20850, 301–594–2735.

SUPPLEMENTARY INFORMATION:

I. Background

On November 26, 1991 (56 FR 60024), under the Safe Medical Devices Act of 1990 (Pub. L. 101–629), FDA issued a tentative final rule proposing to implement regulations requiring user facility and distributor adverse event reporting (hereinafter referred to as the November 1991 tentative final rule). In the November 1991 tentative final rule, FDA also proposed to amend the existing manufacturer reporting regulations to conform to the proposed user facility and distributor reporting requirements.

Subsequent to FDA's issuance of the November 1991 tentative final rule, the Medical Device Amendments of 1992 (Pub. L. 102–300) were enacted on June 16, 1992, and amended certain provisions of section 519 of the Federal Food, Drug, and Cosmetic Act (21 U.S.C. 360i) relating to reporting of adverse device events.

On December 11, 1995 (60 FR 63578), the agency published the MDR regulation for user facilities and manufacturers, based on comments to the November 1991 tentative final rule. The requirements for manufacturer and user facility reporting are found in part 803 (21 CFR part 803). The reporting requirements for distributors fell under a different implementation timetable. On May 28, 1992, the provisions of the November 1991 tentative final rule pertaining to distributor reporting became final by operation of law. Accordingly, medical device distributors are currently subject to the reporting regulations contained in the November 1991 tentative final rule and codified in part 804 (21 CFR part 804). FDA intends to issue a proposed rule to make the distributor reporting requirements consistent with the manufacturer and user facility reporting requirements.

A. Guidance for User Facilities and Distributors

Due to the diversity and complexity of medical device products, no regulation could address each possible reporting scenario. Therefore, the agency is providing three guidance documents entitled ''Medical Device Reporting: An Overview,'' ''Medical Device Reporting for User Facilities,'' and ''Medical Device Reporting for Distributors.'' These guidance documents contain information describing who is covered by the MDR rule, who is responsible for reporting, how to report, and when to report. The documents also contain statements of FDA's policy, interpretations of the regulation, and answers to frequently asked questions. Elsewhere in this issue of the Federal Register, FDA is publishing a notice of availability of, and requesting comments on, a draft guidance document focusing on reporting by manufacturers.

B. MDR Reporting Forms

The MDR final rule requires that MDR reports be submitted using the appropriate form, or an approved electronic equivalent. The actual forms were made available for public comment, were approved by the Office of Management and Budget (OMB) through February 28, 1999, under OMB control number 0910–0059, and were announced as final in the Federal Register of April 11, 1996 (61 FR 16043). The April 11, 1996, final rule also extended the effective date of the MDR final rule for manufacturers and user facilities to July 31, 1996, in order to provide additional time for compliance. This notice announces the availability of the following MDR forms: FDA Form 3419, Semiannual User Facility Report; FDA Form 3417, Baseline Report; and FDA Form 3381, Annual Certification. FDA Form 3500A, the MEDWATCH Form, has been in use for several years and is available from the same sources listed above. This form, or an approved electronic equivalent, will continue to be used for reporting individual adverse events. Although manufacturers, distributors, and device user facilities may immediately begin using the forms announced in this notice to submit reports required under the MDR regulations, use of the forms will not be required until July 31, 1996, the effective date of the MDR final rule.

II. Significance of a Guidance

A guidance document does not bind FDA or the public, and does not create or confer any rights, privileges, or benefits for or on any person; however, it does represent the agency's current thinking on the subjects discussed therein.

III. Request for Comments

All guidance documents developed by FDA are open to public comment. Therefore, interested persons may submit comments regarding the final guidance documents that are being announced in this notice. Interested persons may, at any time, submit to the Dockets Management Branch (address above) written comments regarding the three guidance documents. Two copies of any comments are to be submitted, except that individuals may submit one copy. Comments are to be identified by the title of the respective guidance document and with the docket number found in brackets in the heading of this document. Copies of the three guidance documents and received comments may be seen in the office above between 9 a.m. and 4 p.m., Monday through Friday.

Received comments will be considered in reviewing and revising the guidance documents.

Dated: May 21, 1996.

Joseph A. Levitt,

Deputy Director for Regulations Policy, Center for Devices and Radiological Health.

[FR Doc. 96–13666 Filed 5–30–96; 8:45 am]

BILLING CODE 4160–01–F

[Docket No. 96D–0137]

Medical Device Reporting, Draft Guidance Document for Manufacturers; Notice of Availability

AGENCY: Food and Drug Administration, HHS.

ACTION: Notice.

SUMMARY: The Food and Drug Administration (FDA) is announcing the availability of a draft guidance entitled ''Medical Device Reporting for Manufacturers.'' This guidance contains information to help facilitate manufacturer compliance with the new Medical Device Reporting (MDR) regulation. FDA is inviting comments on the draft guidance, particularly on matters not already addressed in the draft manufacturer device reporting guidance.

DATES: Submit written comments by August 29, 1996.

ADDRESSES: Submit written comments to the Dockets Management Branch (HFA–305), Food and Drug Administration, 12420 Parklawn Dr., rm. 1–23, Rockville, MD 20857. Comments should be identified by title and the docket number found in brackets in the heading of this document. A copy of the draft guidance document and received comments are

available for public examination in the Dockets Management Branch (address above) between 9 a.m. and 4 p.m., Monday through Friday.

Persons interested in obtaining a copy of the draft guidance document may do so by using the World Wide Web. FDA's home page address may be accessed at http://www.fda.gov and then select the Medical Devices and Radiological Health option. Next, select the Program Areas option and then select Medical Device Reporting. All Relevant documents will be listed and available for downloading.

Anyone with a video terminal or personal computer with a modem can obtain the draft guidance document from the electronic docket administered by the Division of Small Manufacturers Assistance (1–800–252–1366 or 1–301–594–2741) by making the following menu choices: 5–Postmarket Surveillance; 2–Medical Device Reports—Policies/Guidelines.

Individuals unable to use the above two options may request information, through the CDRH Facts-on-Demand system, about obtaining paper copies of the document, by dialing 1–800–899–0381 or 1–301–827–0111. After following the voice prompts, request document number 799. FDA has arranged to have other government, industry, and health care organizations provide paper copies of the document for a fee that each organization will set for itself.

FOR FURTHER INFORMATION CONTACT: Earl W. Robinson, Center for Devices and Radiological Health (HFZ–530), Food and Drug Administration, 1350 Piccard Dr., Rockville, MD 20850, 301–594–2735.

SUPPLEMENTARY INFORMATION:

I. Background

Under the Safe Medical Devices Act of 1990 (Pub. L. 101–629) (SMDA), on November 26, 1991 (56 FR 60024), FDA issued a tentative final rule proposing to implement regulations requiring user facility and distributor adverse event reporting (hereinafter referred to as the November 1991 tentative final rule). In this November 1991 tentative final rule, FDA also proposed to amend the existing manufacturer reporting regulations to conform to the proposed user facility and distributor reporting requirements.

After FDA's issuance of the November 1991 tentative final rule, the Medical Device Amendments of 1992 (Pub. L. 102–300) (the 1992 amendments) were enacted on June 16, 1992, and amended certain provisions of section 519 of the Federal Food, Drug, and Cosmetic Act (21 U.S.C. 360i) relating to reporting of adverse device events.

On December 11, 1995 (60 FR 63578), FDA published the MDR regulation for user facilities and manufacturers, based on comments to the November 1991 tentative final rule. In the Federal Register of April 11, 1996 (61 FR 16043), the effective date of this final rule was extended to July 31, 1996, in order to provide additional time for compliance. The requirements for manufacturer and user facility reporting are found at 21 CFR part 803.

II. Draft Guidance for Manufacturers

Due to the diversity and complexity of medical device products, no regulation could address each possible reporting scenario. Therefore, the agency is providing additional guidance to the industry. The agency has developed a draft guidance document entitled ''Medical Device Reporting for Manufacturers.'' This draft guidance contains information describing: Who is covered by the MDR rule, who is responsible for reporting, how to report, and when to report. The draft guidance also contains statements of FDA policy, interpretations of the regulation, and answers to frequently asked questions. The agency also addresses in this guidance, many questions which have been raised after to the publication of the November 1991 tentative final rule. However, because the agency anticipates that additional new questions and issues may be raised as the effective date of the MDR regulation approaches, the agency is issuing the manufacturer guidance as a draft document and specifically invites questions and comments on matters not already addressed in the draft guidance. The agency will consider all submitted comments when revising the draft guidance. The agency anticipates that a revised guidance document for manufacturers will be available by November 27, 1996. In the interim, FDA believes the information contained in the draft guidance will be useful to medical device manufacturers as they seek to implement the requirements of the new MDR final rule.

III. Significance of a Guidance

A guidance document does not bind FDA or the public, and does not create or confer any rights, privileges, or benefits for or on any person; however, it does represent the agency's current thinking on the subjects discussed therein. The draft guidance document announced in this notice represents the agency's tentative thinking on issues related to manufacturer reporting.

IV. Request for Comments

Interested persons may, on or before August 29, 1996, submit to the Dockets Management Branch (address above) written comments regarding the draft guidance entitled ''Medical Device Reporting for Manufacturers.'' Two copies of any comments are to be submitted, except that individuals may submit one copy. Comments are to be identified by the title of the guidance and the docket number found in brackets in the heading of this document. Copies of the guidance documents and received comments may be seen in the office above between 9 a.m. and 4 p.m., Monday through Friday.

Received comments will be considered in revising the draft guidance document.

Dated: May 21, 1996.

Joseph A. Levitt,

Deputy Director for Regulations Policy, Center for Devices and Radiological Health.

[FR Doc. 96–13665 Filed 5–30–96; 8:45 am]

BILLING CODE 4160–01–F

National Institutes of Health

National Institute of Mental Health; Notice of Closed Meetings

Pursuant to Section 10(d) of the Federal Advisory Committee Act, as amended (5 U.S.C. Appendix 2), notice is hereby given of the following meetings of the National Institute of Mental Health Special Emphasis Panel:

Agenda/Purpose: To review and evaluate grant applications.

Committee Name: National Institute of Mental Health Special Emphasis Panel.

Date: June 12, 1996.

Time: 6 p.m.

Place: Chevy Chase Holiday Inn, 5520 Wisconsin Avenue, Chevy Chase, MD 20815.

Contact Person: Michael D. Hirsch, Parklawn Building, Room 9C–18, 5600 Fishers Lane, Rockville, MD 20857. Telephone: 301, 443–1000.

Committee Name: National Institute of Mental Health Special Emphasis Panel.

Date: June 14, 1996.

Time: 12 p.m.

Place: Chevy Chase Holiday Inn, 5520 Wisconsin Avenue, Chevy Chase, MD 20815.

Contact Person: Michael D. Hirsch, Parklawn Building, Room 9C–18, 5600 Fishers Lane, Rockville, MD 20857. Telephone: 301, 443–1000.

Committee Name: National Institute of Mental Health Special Emphasis Panel.

Date: June 20, 1996.

Time: 8;30 a.m.

Place: The Latham Hotel Georgetown, 3000 M Street, NW., Washington, DC 2007.

Contact Person: Phyllis D. Artis, Parklawn Building, Room 9C–26, 5600 Fishers Lane,

Rockville, MD 20857. Telephone: 301, 443–6470.

The meetings will be closed in accordance with the provisions set forth in secs. 552b(c)(4) and 552b(c)(6), Title 5, U.S.C. Applications and/or proposals and the discussions could reveal confidential trade secrets or commercial property such as patentable material and personal information concerning individuals associated with the applications and/or proposals, the disclosure of which would constitute a clearly unwarranted invasion of personal privacy.

(Catalog of Federal Domestic Assistance Program Numbers 93.242, 93.281, 93.282)

Dated: May 22, 1996.

Susan K. Feldman,

Committee Management Officer, NIH.

[FR Doc. 96–13660 Filed 5–30–96; 8:45 am]

BILLING CODE 4140–01–M

DEPARTMENT OF HOUSING AND URBAN DEVELOPMENT

[Docket No. FR–3778–N–87]

Office of the Assistant Secretary for Community Planning and Development; Federal Property Suitable as Facilities To Assist the Homeless

AGENCY: Office of the Assistant Secretary for Community Planning and Development, HUD.

ACTION: Notice.

SUMMARY: This Notice identifies unutilized, underutilized, excess, and surplus Federal property reviewed by HUD for suitability for possible use to assist the homeless.

DATES: May 31, 1996.

FOR FURTHER INFORMATION CONTACT: Mark Johnston, Department of Housing and Urban Development, Room 7256, 451 Seventh Street, SW, Washington, DC 20410; telephone (202) 708–1226; TDD number for the hearing- and speech-impaired (202) 708–2565, (these telephone numbers are not toll-fee), or call the toll-free Title V information line at 1–800–927–7588.

SUPPLEMENTARY INFORMATION: In accordance with the December 12, 1988 court order in *National Coalition for the Homeless* v. *Veterans Administration,* No. 88–2503–OG (D.D.C.), HUD publishes a Notice, on a weekly basis, identifying unutilized, underutilized, excess and surplus Federal buildings and real property that HUD has reviewed for suitability for use to assist the homeless. Today's Notice is for the purpose of announcing that no additional properties have been determined suitable or unsuitable this week.

Dated: May 23, 1996.

Jacquie M. Lawing,

Deputy Assistant Secretary for Economic Development.

[FR Doc. 96–13480 Filed 5–30–96; 8:45 am]

BILLING CODE 4210–29–M

DEPARTMENT OF THE INTERIOR

Fish and Wildlife Service

Availability of the Final Joint Programmatic Environmental Impact Report and Environmental Impact Statement on the Proposed Issuance of Incidental Take Permits for the Coastal California Gnatcatcher and Six Other Listed Species in the Central and Coastal Natural Community Conservation Planning Subregion of Orange County, CA

AGENCY: Fish and Wildlife Service, Interior.

ACTION: Notice of availability.

SUMMARY: This notice advises the public that the Final Environmental Impact Report/Environmental Impact Statement (EIR/EIS) on the proposed issuance of nine incidental take permits for seven listed species in the Central and Coastal Natural Community Conservation Planning (NCCP) Subregion of Orange County, California, is available. Publication of the Record of Decision and issuance of the permits will occur no sooner than 30 days from the date of this notice. This notice is provided pursuant to regulations implementing the National Environmental Policy Act (40 CFR 1506.6).

ADDRESSES: The documents discussed herein are available for public inspection, by appointment, during normal business hours, at the Carlsbad Field Office, U.S. Fish and Wildlife Service, 2730 Loker Avenue West, Carlsbad, California 92008 (telephone: 619–431–9440); and at the Planning Department, Orange County Environmental Management Agency, 300 North Flower Street, Santa Ana, California 92702 (telephone: 714–834–5550).

FOR FURTHER INFORMATION CONTACT: Mr. Gail Kobetich, Field Supervisor, U.S. Fish and Wildlife Service (see **ADDRESSES** above), telephone: 619–431–9440; or Mr. Tim Neely, Planning and Zoning Administrator, Orange County Environmental Management Agency (see **ADDRESSES** above), telephone: 714–834–2552.

SUPPLEMENTARY INFORMATION:

Availability of Documents

Copies of the Final EIR/EIS and associated documents (comment letters on the Draft EIS/EIR, response to comments, the final Implementation Agreement, and final maps) can be obtained by contacting the Carlsbad or Santa Ana offices listed above (see **ADDRESSES**). The response to comments addresses changes that were made in draft documents associated with the permit applications that previously were made available for public review. The complete application file may be viewed during normal business hours, by appointment, at the Carlsbad and Santa Ana offices. A letter announcing availability of the Final EIR/EIS has been forwarded to all parties who previously received the notice of availability of the Draft EIR/EIS, and/or who requested a copy of, or commented on, the Draft EIR/EIS.

Background

On March 30, 1993, the U.S. Fish and Wildlife Service (Service) published a final rule determining the coastal California gnatcatcher (*Polioptila californica californica*) as a threatened species (58 FR 16742). The ''take'' of threatened and endangered species is prohibited under section 9 of the Act and its implementing regulations. Take is defined in part as killing, harming or harassing listed species, including significant habitat modification that kills or injures listed species. The Service, however, may issue permits under section 10 of the Act to conduct activities involving the take of threatened and endangered species under certain circumstances, including carrying out scientific activities, enhancing the propagation or survival of the species, or incidentally taking the species in connection with otherwise lawful activities. Regulations governing such permits are at 50 CFR 17.22 and 17.32.

On December 10, 1993, the Service issued a final special rule for the coastal California gnatcatcher, pursuant to section 4(d) of the Act (58 FR 65088). Incidental take of the gnatcatcher is allowed under the special rule if such take results from activities conducted under a plan prepared pursuant to the NCCP Act of 1991, NCCP Process Guidelines, and the NCCP Southern California Coastal Sage Scrub Conservation Guidelines. The special rule also requires Federal approval of the NCCP Plan/Habitat Conservation Plan (HCP).

The County of Orange (lead applicant), University of California-

Irvine, Transportation Corridor Agencies, Metropolitan Water District, Santiago County Water District, Irvine Ranch Water District, The Irvine Company, Chandis-Sherman Companies, and Southern California Edison each have applied to the Service for a 75-year incidental take permit pursuant to section 10(a)(1)(B) of the Act. In addition, the cities of Anaheim, Costa Mesa, Irvine, Laguna Beach, Laguna Niguel, Lake Forest, Newport Beach, Orange, and Tustin also may apply for individual permits. Should any of these cities apply for individual permits, the Final EIR/EIS will be used to satisfy their State and Federal environmental documentation requirements. In support of their permit application package, the applicants have prepared a NCCP Plan/HCP and an IA for the Central and Coastal NCCP Subregion of Orange County (Subregion). In December 1995, these documents were circulated for review and comment, along with the Draft EIR/EIS.

Under the proposed action, section 10(a)(1)(B) permits would be issued by the Service subject to the terms and conditions of the NCCP Plan/HCP and its IA. The proposed permits would authorize the incidental take of 44 species, 7 of which are listed species, including: the threatened coastal California gnatcatcher, and the endangered American peregrine falcon (*Falco peregrinus anatum*), Riverside fairy shrimp (*Streptocephalus woottoni*), arroyo southwestern toad (*Bufo microscaphus californicus*), least Bell's vireo (*Vireo bellii pusillus*), southwestern willow flycatcher (*Empidonax traillii extimus*), and the Pacific pocket mouse (*Perognathus longimembris pacificus*). Consistent with the U.S. Department of the Interior's ''No Surprises'' Policy, the permit applicants also request coverage of an additional 37 currently unlisted plant and animal species that occur within the NCCP Plan/HCP area, including 5 species proposed for listing as threatened or endangered, and 5 plant species on the Dana Point Headlands (Headlands) only. The NCCP Plan/HCP would conserve the 37 unlisted species according to standards required for species listed under the Act. Unlisted species would be named on the permits, with incidental take becoming effective upon their listing under the Act.

Although the NCCP Plan/HCP has focused on coastal sage scrub habitat (CSS), in keeping with the legislative intent of the California NCCP Act of 1991 to protect multiple habitat types, the applicants propose to protect four additional habitat types to the extent that no additional mitigation or compensation would be required of participating landowners should any species dependent upon or associated with these habitats be listed during the 75-year permit period. These habitat types are: oak woodlands, Tecate cypress forest, cliff and rock, and chaparral (coastal subarea only). Should any species dependent upon or associated with these habitats be listed in the future, the Service will assume the responsibility for any additional mitigation measures, above and beyond the NCCP Plan/HCP implementation program, that would be required to provide the regulatory basis for issuing section 10(a)(1)(B) permits to participating landowners.

The NCCP Plan/HCP subregional planning area includes approximately 208,000 acres, of which about 104,000 acres remain as natural lands that are subject to intense development pressure. The Subregion contains about 30,833 acres of CSS supporting approximately 600 pairs of California gnatcatchers. Under the NCCP Plan/HCP, 5,336 acres of CSS, currently supporting 110 pairs of gnatcatchers, could be incidentally taken as a result of development by participating landowners. In addition, development of 2,108 acres of CSS habitat, currently supporting 11 pairs of gnatcatchers, could be incidentally taken by activities of non-participating landowners. Other habitats associated with CSS could also be developed, including about 2,550 acres of chaparral and 12,025 acres of grasslands.

The applicants propose to minimize and mitigate the impacts of take by establishing a 37,378-acre Reserve System. The Reserve System will contain more than 18,527 acres of CSS, 6,950 acres of chaparral, 5,732 acres of grasslands, and other habitats. The Reserve System will be managed by its public owners according to comprehensive management plans, including, but not limited to, fire management, grazing management, recreation/public access management, and habitat restoration plans. Such management will be funded by an endowment fund in excess of $10.6 million, and by mitigation fees contributed by non-participating landowners who elect to use this fee option rather than pursue an individual HCP. Management of reserve lands will be coordinated by a non-profit Board of Directors, to be composed of public and private landowners, the California Department of Fish and Game (CDFG), and the Service.

To supplement the Reserve System, 1,906 acres are designated as Special Linkage Areas and another 3,796 acres are designated as Existing Use Areas. Another 3,831 acres within the Subregion will remain as public Open Space. The NCCP Plan/HCP also includes guidelines for the North Ranch Policy Plan Area to ensure that any future development in this area protects the reserve and subregional biodiversity. No take of covered species would be authorized in the Existing Use Areas or North Ranch Policy Plan Area.

Of the 44 covered species addressed in the NCCP Plan/HCP, 10 are conditionally covered and will be subject to specified mitigation measures, in addition to the establishment and management of the Reserve System. Conditionally covered species include: the least Bell's vireo, southwestern willow flycatcher, arroyo southwestern toad, Quino checkerspot butterfly (Euphidryas editha quino), Riverside fairy shrimp, San Diego fairy shrimp (Branchinecta sandiegoensis), Pacific pocket mouse, golden eagle (*Aquila chrysaetos*), prairie falcon (*Falco mexicanus*), and the foothill mariposa lily (*Calochortus weedii* var. *intermedius*). In general, impacts to habitats supporting smaller populations of conditionally covered species would be mitigated by habitat enhancement or restoration within the Reserve System. Mitigation for impacts to habitats or populations that may have significant conservation value would be handled on a case-by-case basis. Specific provisions for the Pacific pocket mouse include the creation of a 22-acre temporary preserve for up to 12 years at the Headlands, and providing $700,000 towards a programmatic research and recovery effort to be initiated by the Service and CDFG; the Headlands landowner will contribute $350,000 to be matched by the Service. If, through this research and recovery effort, the Service determines that the Headlands site is essential for the survival and recovery of the species, the Service has committed to purchase the site.

Development of the Final EIR/EIS

To assure compliance with the purpose and intent of the National Environmental Policy Act (NEPA) and the California Environmental Quality Act, the Final EIR/EIS was developed cooperatively by the Service's Carlsbad Field Office (lead Federal agency) and the Orange County Environmental Management Agency (lead State agency). On June 24, 1993, the Service published in the Federal Register a Notice of Intent to prepare the EIR/EIS (58 FR 34270). This notice also

advertised a joint public scoping meeting, held on July 7, 1993. The scoping process was initiated in accordance with NEPA to solicit comments from a variety of Federal, State, and local entities on issues/alternatives to be addressed in the EIR/EIS. A report was prepared in September 1993, summarizing the scoping process. A joint Notice of Availability of the Draft EIR/EIS, and Notice of Receipt of applications for incidental take permits associated with the Orange County Central/Coastal Subregion NCCP Plan/HCP, was published in the Federal Register on December 15, 1995 (60 FR 64447).

Adverse and beneficial effects, associated with the implementation of each alternative, were described in the Draft EIR/EIS. The Service received 76 letters of comment on the Draft EIR/EIS that mainly focused on the following issues: (1) Creation of a permanent habitat Reserve System; (2) Headlands/Pacific pocket mouse issues; (3) reserve design and process; (4) habitat coverage; (5) species coverage; (6) adequacy of biological linkages/connectivity; (7) Coal Canyon habitat linkage; (8) El Toro Marine Corps Air Station; (9) extension of the comment period; (10) changes requested by local jurisdictions; (11) revisions to the draft IA; (12) role of adaptive management; and (13) assurance of implementation. Copies of all comments received and responses to all comments are available for public review. The Draft EIR/EIS, Draft NCCP Plan/HCP, and Draft IA were revised, where appropriate, based on public comments. No new issues or additional significant impacts were identified as a result of public comment on the Draft EIR/EIS.

Alternatives Analyzed in the Final EIR/EIS

Due to the scale of the NCCP program for the Subregion, the lead agencies assessed various regional conservation strategies and reserve designs. Four alternatives were advanced for detailed analysis in the Final EIR/EIS: (1) Proposed Project Alternative (approve and implement the NCCP Plan/HCP), (2) No Project/No Action Alternative, (3) No Take Alternative, and (4) a Programmatic Alternative. Each alternative was evaluated for its potential to result in significant adverse environmental impacts, and the adequacy or inadequacy of the proposed measures to avoid, minimize, and substantially reduce and mitigate such negative effects.

The Service's preferred action is approval of the NCCP Plan/HCP, and issuance of incidental take permits with the mitigating, minimizing, and monitoring measures outlined in the Proposed Project Alternative. (See Background section for a description of this alternative).

Under the No Project/No Action Alternative, a comprehensive regional conservation strategy would not be undertaken, and a Reserve System would not be established. Development would occur as planned by the local jurisdictions. Protection of the coastal California gnatcatcher and its CSS habitat, and other federally listed species, would occur on a project-by-project basis through the section 7 and section 10 processes of the Act, as appropriate. Other unlisted species might be protected if included in the planning process for each project.

The No Take Alternative is similar to the No Project Alternative, except that it assumes that no take of gnatcatchers or their associated habitat would be allowed within the Subregion pursuant to section 9 of the Act, and that the section 7 and 10 processes would not be used to authorize or exempt such incidental take. Development would be limited to those projects that do not result in take of the gnatcatcher or its occupied habitat. Protection of other species (not federally listed) would occur only to the extent currently required by State environmental regulations.

Similar to the Proposed Project Alternative, the Programmatic Alternative would involve a subregional conservation strategy, including the creation of a large-scale habitat reserve and the implementation of a long-term management program. However, under the programmatic approach, specific boundaries for a habitat reserve system and design of the management program would be developed over time, as specific projects requiring mitigation are undertaken that contribute mitigation fees or dedication lands to a management entity.

The underlying goal of the Proposed Project Alternative is to implement ecosystem-based conservation measures, aimed at the protection of multiple species and multiple habitats on a regional scale, while accommodating compatible development. The Central and Coastal Orange County NCCP Plan/HCP would result in the implementation of a comprehensive reserve strategy for CSS and related habitats in the Subregion, that is expected to provide long-term benefits to the coastal California gnatcatcher and 43 other covered species and their habitats. The Service intends to approve the Orange County Central/Coastal NCCP Plan/HCP and issue section 10 incidental take permits to the applicants.

Dated: May 23, 1996.

Thomas J. Dwyer,

Regional Director, Region 1, Portland, OR.

[FR Doc. 96–13538 Filed 5–30–96; 8:45 am]

BILLING CODE 4310–55–P

Bureau of Land Management

[ID–933–1430–01; IDI–31741]

Notice of Public Meetings for Proposed Land Withdrawal; Idaho

AGENCY: Bureau of Land Management, Interior.

ACTION: Notice of public meetings.

SUMMARY: The Department of the Air Force proposes to withdraw 11,583.34 acres under Alternative Site No. 1 or 9,673.34 acres under Alternative Site No. 2 of public land from all forms of appropriation under the public land laws, mining laws and mineral leasing laws, for the Mountain Home Air Force Base Enhanced Training in Idaho (ETI) site. Several public meetings will be held to gather comments on the proposal, at the dates, times, places and addresses described in this Notice.

EFFECTIVE DATE: Date of publication.

FOR FURTHER INFORMATION CONTACT: Howard Hedrick, BLM Idaho State Office, 3380 Americana Terrace, Boise, Idaho 83706–2500, 208–384–3197.

The Department of the Air Force proposes that 11,583.34 acres under Alternative Site No. 1 or 9,673.34 acres under Alternative Site No. 2 of public land be withdrawn for a period of 20 years to provide protection of the ETI. The lands are described as follows:

Boise Meridian

(Alternative Site No. 1)—Proposal: Clover Butte Drop Zone

T. 12 S., R. 8E.,
Sec. 10, SE¼SE¼;
Sec. 11, S½S½;
Sec. 12, S½S½;
Sec. 13;
Sec. 14;
Sec. 15, E½E½;
Sec. 22, E½E½;
Sec. 23 to 26 inclusive;
Sec. 27, E½E½;
Sec. 34, E½E½;
Sec. 35.

T. 12 S., R. 9 E.,
Sec. 7, lot 4, SE¼SW¼ and S½SE¼;
Sec. 8, S½S½;
Sec. 17 to 20 inclusive;
Sec. 29 to 32 inclusive.

(No Drop Zone)

T. 11 S., R. 4 E.,
Sec. 23, S½SW¼NW¼SE¼.

T. 9 S., R. 6 E.,

Sec. 21.
T. 13 S., R. 4 E.,
Sec. 4, N½NE¼NW¼SW¼

(Emitters)

T. 8 S., R. 9 E.,
Sec. 34, SE¼SE¼NW¼SE¼.
T. 9 S., R. 6 E.,
Sec. 15, NW¼NW¼SW¼SW¼.
T. 11 S., R. 4 E.,
Sec. 23, NE¼NE¼NE¼SW¼.
T. 11 S., R. 5 E.,
Sec. 17, SE¼SE¼NE¼NE¼.
T. 12 S., R. 3 E.,
Sec. 26, NE¼NE¼NW¼NE¼.
T. 12 S., R. 10 E.,
Sec. 30, SW¼SW¼SW¼SW¼ within lot 4.
T. 13 S., R. 9 E.,
Sec. 10, NE¼NE¼NW¼NW¼.

The areas described aggregate 11,583.34 acres in Owyhee County.

(Alternative Site No. 2)—Proposal; Grasmere Drop Zone

T. 11 S., R. 4 E.,
Secs. 25 to 27 inclusive;
Secs. 34, N½, SE¼ and E½SW¼;
Sec. 35.
T. 11 S., R. 5 E.,
Sec. 30, lots 1 to 4 inclusive;
Sec. 31, lots 1 to 4 inclusive.
T. 12 S., R. 4 E.,
Secs. 1 to 4 inclusive;
Sec. 9;
Sec. 10, NW¼, S½, W½NE¼ and SE¼NE¼;
Sec. 11, S½, N½NE¼, SE¼NE¼ and NE¼NW¼;
Sec. 12;
Sec. 13, N½NW¼, N½SW¼NW¼, N½SE¼NW¼, NW¼NE¼, and N½SW¼NE¼;
Sec. 14, N½NW¼, N½SW¼NW¼, N½SE¼, N½SW¼, NE¼ and N½SE¼NE¼;
Sec. 15, N½NW¼, N½SW¼NW¼, N½SE¼NW¼, N½NE¼, N½SW¼NE¼ and N½SE¼NE¼.

(No Drop Zone)

T. 12 S., R. 9 E.,
Sec. 20, S½SW¼SW¼SW¼.
T. 9 S., R. 9 E.,
Sec. 21.
T. 13 S., R. 4 E.,
Sec. 4, N½NE¼NW¼SW¼.

(Emitters)

T. 8 S., R. 9 E.,
Sec. 34, SE¼SE¼NW¼SE¼.
T. 9 S., R. 6 E.,
Sec. 15, NW¼NW¼SW¼SW¼.
T. 11 S., R. 4 E.,
Sec. 23, NE¼NE¼NE¼SW¼.
T. 11 S., R. 5 E.,
Sec. 17, SE¼SE¼NE¼NE¼.
T. 12 S., R. 3 E.,
Sec. 26, NE¼NE¼NW¼NE¼.
T. 12 S., R. 10 E.,
Sec. 30, SW¼SW¼SW¼SW¼ within in lot 4.
T. 13 S., R. 9 E.,
Sec. 10, NE¼NE¼NW¼SE¼.

The areas described aggregate 9,673.34 acres in Owyhee County.

Two (2) public meetings are scheduled at the following dates, times, places, and addresses:

1. July 2, 1996, 5:00 to 8:00 p.m., Lion's Den, Jordan Valley, Oregon.

2. July 1, 1996, 5:00 to 8:00 p.m., Elko County Library, 720 Court Street, Elko, Nevada.

These meetings are the first step in soliciting public comments on the proposed withdrawal. Information gathered at these meetings will be used in the development of an environmental impact statement (EIS). Comments given at these meetings should focus on the merits of the proposal, the feasibility of the identified alternatives, the availability of other alternatives, issues which should be addressed in the EIS, any other comments the public wishes the Air Force and BLM to consider, and any questions concerning the withdrawal proposal. Those who desire to submit written statements, should file them not later than August 1, 1996, to BLM/USAF, P.O. Box 329, Boise, Idaho 83701–0329.

Dated: May 23, 1996.

J. David Brunner,

Deputy State Director for Resource Services.

[FR Doc. 96–13592 Filed 5–30–96; 8:45 am]

BILLING CODE 4310–GG–M

[MT–924–1430–01; MTM 84500]

Notice of Intent to Prepare a National Environmental Policy Act (NEPA) Analysis; Notice of Public Meetings; Montana

AGENCY: Forest Service and Bureau of Land Management, Interior.

ACTION: Notice of intent to prepare a NEPA analysis on a mineral withdrawal in southwestern Montana.

SUMMARY: The U.S. Department of the Interior, Bureau of Land Management (BLM), with U.S. Department of Agriculture, Forest Service (FS), concurrence proposes to withdraw approximately 19,100 acres of Federal lands from location and entry under the mining laws to protect the watersheds within the drainages of the Clark's Fork of the Yellowstone, Soda Butte Creek, and the Stillwater River, and the water quality and fresh water fishery resources within Yellowstone National Park. The FE and BLM will jointly prepare a NEPA analysis and, if necessary, amend Custer and Gallatin National Forest Land Management Plans. The FES will recommend a preferred alternative. This is a separate action not connected to the ongoing New World Mine EIS being prepared by the Gallatin National Forest.

The following described National Forest System lands are affected by this proposal:

Principal Meridian, Montana

T. 8 S., R. 14 E.,
Sec. 25, surveyed;
Sec. 33, partly surveyed;
Secs. 34 to 36, inclusive, surveyed.
T. 9 S., R. 14 E.,
Secs. 1 to 28, inclusive;
Secs. 33 t 36, inclusive, partly surveyed.
T. 8 S., R. 15 E.
Secs. 30 and 31.
T. 9 S., R. 15 E.,
Secs. 5 to 8, inclusive;
Secs. 17 to 20, inclusive;
Secs. 29 to 32, inclusive.

The areas described aggregate approximately 19,100 acres in Park County, Montana..

DATES: The public meetings will be held on Monday, July 15, 1996, in Red Lodge, Montana, at the LuPine Inn, at 7:00 p.m., Tuesday, July 16, 1996, in Cooke City, Montana, at 7:00 p.m. at the Fire Hall; on Wednesday, July 17, 1996, in Cody, Wyoming, at 7:00 p.m. at the Cody Club Room; and on July 18, 1996, Livingston, Montana, at 7:00 p.m. in the Community Room of the park County Courthouse.

ADDRESSES: Comments should be sent to the Cooke City Area Mineral Withdrawal NEPA Analysis Team, BLM, Montana State Office, P.O. Box 36800, Billings, Montana 59107.

FOR FURTHER INFORMATION CONTACT: John Thompson, Cooke City Area Mineral Withdrawal NEPA Analysis Team, BLM, Montana State Office, P.O. Box 36800, Billings, Montana 59107, 406–255–2852.

SUPPLEMENTARY INFORMATION: A Notice of Proposed Withdrawal was published in the Federal Register, 60 FR 45732, September 1, 1995, which segregated the lands described from location and entry under the mining laws. Notice is hereby given that a series of meetings will be held to provide an opportunity for public involvement regarding the proposed withdrawal and the preparation of a NEPA analysis by the FS and BLM. These meetings fulfill the public meeting requirements for withdrawals proposals under 43 CFR Part 2310.3–1. Comments and recommendations on this proposal should be received by August 29, 1996.

Dated: May 24, 1996.

Thomas P. Lonnie,

Deputy State Director, Division of Resources.

Dated: May 24, 1996.

Nancy T. Curriden,

Forest Supervisor Custer National Forest.

[FR Doc. 96–13692 Filed 5–30–96; 8:45 am]

BILLING CODE 4310–ON–M

[WY980–1320–01; WYW 136069]

Notice of Proposed Withdrawal and Opportunity for Public Meeting; WY

AGENCY: BLM, Interior.

ACTION: Notice.

SUMMARY: The BLM proposes to withdraw 4,326.51 acres of public land in Sweetwater and Uinta Counties, to protect the habitat of the Uinta greenthread, *Thelesperma pubescens*. This notice closes the land for up to 2 years from surface entry and mining. The land will remain open to mineral leasing.

DATE: Comments and requests for meeting should be received on or before August 29, 1996.

ADDRESS: Comments and meeting requests should be sent to the BLM Wyoming State Director, P.O. Box 1828, Cheyenne, Wyoming 82003–1828.

FOR FURTHER INFORMATION CONTACT: Jim Paugh, BLM Wyoming State Officer, 307–775–6306.

SUPPLEMENTARY INFORMATION: On April 30, 1996, a petition/application was approved by the Assistant Secretary for Land and Minerals Management. The approval of the petition/application results in a proposal to withdraw the following described public land from settlement, sale, location, or entry under the general land laws, including the mining laws, subject to valid existing rights:

Sixth Principal Meridian

T. 13 N., R. 111 W.,
- Sec. 5, lot 8 and NW¼SW¼NW¼;
- Sec. 6, SE¼NE¼, S½NE¼SW¼, SE¼SW¼ and N½SE¼;
- Sec. 7, N½NE¼NW¼;
- Sec. 9, NW¼NE¼ (reserved Federal minerals);
- Sec. 17, SW¼SW¼;
- Sec. 18, S½S½SE¼;
- Sec. 19, lot 6 and E½NW¼;
- Sec. 19, N½NW¼NE¼ (reserved Federal minerals).

T. 14 N., R. 111 W.,
- Sec. 19, E½SE¼;
- Sec. 30, SE¼NW¼ and NE¼SW¼;
- Sec. 32, S½NE¼SW¼, E½SW¼SW¼ and SE¼SW¼;
- Sec. 33, S½NE¼ and N½SE¼.

T. 13 N., R. 112 W.,
- Sec. 2, SW¼NW¼ and NW¼SW¼;
- Sec. 3, E½SE¼;
- Sec. 10,
- Sec. 15, NW¼NE¼, E½NW¼, N½SW¼ and SW ¼SW¼;
- Sec. 16, NW¼SE¼;
- Sec. 22, W½NW¼, NW¼SW¼ and SE¼;
- Sec. 23, W½SW¼;
- Sec. 23, E½SW¼, W½SE¼, and NE¼SE¼ (reserved Federal minerals).

The areas described aggregate 2,149.85 acres in Sweetwater County.

Sixth Principal Meridian, Wyoming

T. 13 N, R. 112 W.,
- Sec. 16, NE¼SW¼ and S½SW¼;
- Sec. 17, SE¼SW¼ and SW¼SE¼;
- Sec. 20, N½, SW¼ and W½SE¼;
- Sec. 21, NW¼.

T. 13 N., R. 113 W.,
- Sec. 3, lots 6 and 7, W½SW¼NE¼, E½SE¼NW¼, E½E½SW¼ and W½W½SE¼.

T. 14 N., R. 113 W.,
- Sec. 34, SE¼NE¼ and W½SE¼;
- Sec. 35, W½SW¼ (reserved Federal minerals).

T. 13 N., R. 114 W.,
- Sec. 13, SW¼NE¼, E½SW¼ and W½SE¼;
- Sec. 13, SE¼SW¼SW¼ (reserved Federal minerals);
- Sec. 23, SE¼SE¼;
- Sec. 23, SE¼NE¼ and NE¼SE¼ (reserved Federal minerals);
- Sec. 24, E½W½ and SW¼SW¼;
- Sec. 24, W½NW¼ and NW¼SW¼ (reserved Federal minerals);
- Sec. 28, SE¼SE¼ (reserved Federal minerals);
- Sec. 33, E½NE¼.

The area described aggregate 2,086.66 acres in Uinta County. Total area of proposed withdrawal is 4,236.51 acres.

The purpose of the proposed withdrawal is to protect the habitat of *Thelesperma pubescens*, a Category 2, Candidate species considered for listing under the Endangered Species Act. This plant species is found in only three populations in Wyoming, occurring on the summit edges of three mesa-like mountains. It's entire range is estimated to be less than 100 square miles with the total population size estimated at less than 10,000 individuals.

For a period of 90 days from the date of publication of this notice, all persons who wish to submit comments, suggestions, or objections in connection with the proposed withdrawal may present their views in writing to the undersigned officer of the BLM.

Notice is hereby given that an opportunity for a public meeting is afforded in connection with the proposed withdrawal. All interested persons who desire a public meeting for the purpose of being heard on the proposed withdrawal must submit a written request to the BLM Wyoming State Director within 90 days from the date of publication of this notice. Upon determination by the authorized officer that a public meeting will be held, a notice of time and place will be published in the Federal Register at least 30 days before the scheduled date of the meeting.

The application will be processed in accordance with the regulations set forth in 43 CFR 2300.

For a period of 2 years from the date of publication of this notice in the Federal Register, the land will be segregated as specified above unless the proposal is denied or cancelled or the withdrawal is approved prior to that date. Licenses, permits, cooperative agreements, or discretionary land use authorizations of a temporary nature which would not impact the plant habitat may be allowed with the approval of an authorized officer of the BLM during the segregative period.

Melvin Schlagel,

Realty Officer.

[FR Doc. 96–13705 Filed 5–30–96; 8:45 am]

BILLING CODE 4310–22–M

DEPARTMENT OF JUSTICE

Notice of Lodging of Consent Decree Pursuant to the Comprehensive Environmental Response, Compensation and Liability Act

Pursuant to Section 122(d)(2) of the Comprehensive Environmental Response, Compensation and Liability Act (''CERCLA''), 42 U.S.C. 9622(d)(2), and Departmental policy, 28 C.F.R. § 50.7, notice is hereby given that a proposed consent decree in *United States* v. *Allied Signal, Inc., et al.*, Civil Action No. 95–617P, was lodged on November 28, 1995 with the United States District Court for the District of Rhode Island. Additional parties were allowed to join the Consent Decree, and thirty-six additional defendants join the Decree in a filing with the court on May 7, 1996. Defendants Allied Signal, Inc.; American Cyanamid Company; Ashland Chemical Company; Elf Atochem North America, Inc. (M & T Chemical, Inc.); GAF Corporation; General Electric Company; Hydron Laboratories Inc.; Mallinckrodt & Baker, Inc. (J.T. Baker, Inc.); Monsanto Company; Morton International, Inc., Allied Signal, Inc.; American Cyanamid Company; Ashland Chemical Company; Elf Atochem North America, Inc.; GAF Corporation; General Electric Company; Hydron Laboratories, Inc.; Mallinckrodt Baker, Inc.; Monsanto Company; Morton International, Inc.; Air Products and Chemical, Inc.; American Standard, Inc.; Armstrong World Industries, Inc.; Bayer Corporation (fka Miles Inc.); Ber Mar Manufacturing Corp.; Borden, Inc.; Branson Ultrasonics Corp.; Burndy Corporation (currently, Framatone Connectors USA Inc.); Ciba-Geigy Corporation; Connecticut Hard Rubber Co./Chr Industries, Inc.; Eaton Corporation; Ganes Chemicals Inc.; Grumman Corp. & Grumman Aerospace Company, Inc.; Hoechst Celanese Corporation; King Industries, Inc.; Kraft Foods, Inc. (On behalf of General Foods

USA); Kraft Foods, Inc. (On behalf of Ware Chemical); the Mennen Company, Inc.; Merck & Co., Inc.; Mine Safety Appliances Company; Minnesota Mining & Manufacturing Company; NL Industries, Inc.; National Starch and Chemical Company; Occidental Chemical Corporation (as successor to Diamond Shamrock Chemicals Inc.); The Perkin-Elmer Corporation; Pfizer Inc; Pitney Bowes, Inc.; Reichold Chemicals, Inc.; Revlon Consumer Products Corporation; Schenectady International, Inc.; E.R. Squibb & Sons, Inc.; Textron, Inc. (Patterson-Sargent); Union Carbide Corporation; The Upjohn Company; R.T. Vanderbilt Company, Inc.; and Wyeth Laboratories, Inc., are all generators of wastes containing hazardous substances which were disposed of at the Picillo Farm Superfund Site in Coventry, Rhode Island.

Under the terms of the proposed decree, defendants will perform and/or pay for certain remedial design/remedial action work involving soil source control and management of groundwater mitigation. The work to be undertaken and/or paid for by defendants is valued by the United States Environmental Protection Agency at $15.9 million. The proposed decree includes a covenant not to sue by the United States under Sections 106 and 107 of CERCLA, 42 U.S.C. §§ 9601 *et seq.*, and under Section 7003 of the Resources Conservation and Recovery Act (''RCRA''), 42 U.S.C. 6973.

The Department of Justice will receive, for a period of thirty (30) days from the date of this publication, comments relating to the proposed consent decree. Comments should be addressed to the Assistant Attorney General for the Environment and Natural Resources Division, Department of Justice, Washington, D.C. 20530, and should refer to *United States* v. *Allied Signal, Inc., et al.*, D.J. reference #90–11–2–985. Commenters may request an opportunity for a public meeting in the affected area, in accordance with Section 7003(d) of RCRA.

The proposed consent decree may be examined at the Office of the United States Attorney for the District of Rhode Island, Westminster Square Building, 10 Dorrance Street, 10th Floor, Providence, Rhode Island; the Region I Office of the Environmental Protection Agency, 290 Canal Street, Boston, Massachusetts; and at the Consent Decree Library, 1120 G Street, N.W., 4th Floor, Washington, D.C. 20005, (202) 624–0892. A copy of the proposed consent decree may be obtained in person or by mail from the Consent Decree Library, 1120 G Street, N.W., 4th Floor, Washington, D.C. In requesting a copy, please enclose a check in the amount of $2.75 (25 cents per page reproduction costs), payable to the Consent Decree Library.

Joel M. Gross,

Chief, Environmental Enforcement Section, Environment and Natural Resources Division.

[FR Doc. 96–13623 Filed 5–30–96; 8:45 am]

BILLING CODE 4410–01–M

Drug Enforcement Administration

Maxicare Pharmacy, Revocation of Registration

On November 1, 1995, the Deputy Assistant Administrator, Office of Diversion Control, Drug Enforcement Administration (DEA), issued an Order to Show Cause to Maxicare Pharmacy, (Respondent) of Houston, Texas, notifying it of an opportunity to show cause as to why DA should not revoke its DEA Certificate of Registration, BM3971644, under U.S.C. 824(a) (2) and (4), and deny any pending application under 21 U.S.C. 823(f), as being inconsistent with the public interest. Specifically, the Order to Show Cause alleged, among other things, that (1) on September 26, 1994, the Respondent's pharmacist and owner (Owner) provided falsified controlled substance records to DEA, allegedly documenting receipt of controlled substances from a local distributor, when subsequently it was determined that an employee of the distributor was unlawfully supplying controlled substances to the Respondent; (2) on January 12, 1995, the Owner and her husband were indicated on numerous counts of violating the Texas Health and Safety code related to the handling of controlled substances; (3) on July 25, 1995, the Owner was found guilty on nine counts of engaging in organized criminal activity related to theft of controlled substances by a public servant, and she was found guilty of fraud, theft and commercial violations of the controlled substances act, for which she was sentenced to ten years imprisonment and was ordered to pay a $3,000.00 fine; and (4) the Owner's husband was found guilty of two counts of engaging in organized criminal activity related to theft of controlled substances, and he was sentenced to seven years imprisonment.

The Order was mailed in the U.S. Mail, and a signed receipt dated November 6, 1995, was returned to DEA. However, neither the Respondent nor anyone purporting to represent it has replied to the Order to Show Cause. More than thirty days have passed since the Order was served upon the Respondent. Therefore, pursuant to 21 CFR 1301.54(d), the Deputy Administrator finds that the Respondent has waived its opportunity for a hearing on the issues raised by the Order to Show Cause, and, after considering the investigative file, enters his final order in this matter without a hearing pursuant to 21 CFR 1301.54(e) and 1301.57.

The Deputy Administrator finds that the Respondent was issued DEA Certificate of Registration BM3971644 on April 22, 1994, as a retail pharmacy, owned by the Owner and her husband (Co-owner). A DEA investigation revealed that, as a result of a DEA audit, the Respondent had significant overages of clonazepam and alprazolam, both Schedule IV controlled substances pursuant to 21 C.F.R. 1308.14. Specifically, on September 20, 1994, pursuant to a federal administrative inspection warrant executed at the Respondent pharmacy, a DEA Diversion Investigator (Investigator) conducted an audit of four different controlled substances, to include clonazepam and alprazolam. The Investigator and the Owner, who was also the pharmacist-in-charge, counted the existing inventory of these substances, to include trade names and generic equivalents, and compared the number on hand with documents which noted the amounts purchased, dispensed, or loaned by the Respondent to other pharmacies. As a result of this audit, it was determined that on September 20, 1994, there were 1,000 more clonazepam tablets than could be accounted for by the Respondent's records, to include purchase invoices and filled prescriptions. Also, on that date, there were 1,400 more alprazolam tablets than could be accounted for by the Respondent's records, and a total variance for all four substances of 3,438 tablets.

During the inspection, the Investigator asked the Owner to provide the Respondent pharmacy's records for alprazolam and clonazepam. The Owner told the Investigator that some of her acquisition invoices were at home, but she agreed to deliver these documents to the Investigator. On September 26, 1994, the Owner delivered to the Investigator several invoices from Abbey Pharmaceutical which were dated between July 1, 1994, and September 2, 1994. The Owner also told the Investigator that a named employee (Employee) of Abbey Pharmaceutical had agreed to loan the Respondent pharmacy these controlled substances for up to one year, and at the end of that year, the Owner was either to replace the substances or to pay for them. However, when the Investigator

interviewed the Employee, he stated that he did not know the Owner or the Respondent pharmacy. The Investigator also interviewed other officials of Abbey Pharmaceuticals, who stated that the Respondent pharmacy was not a customer, and that Abbey Pharmaceutical had not sold, loaned, or shipped controlled substances to the Respondent.

Further investigation revealed that the Owner was involved in a scheme with an employee of Abbey Pharmaceutical, whereby the Owner received clonazepam and alprazolam and blank invoices for her to complete to create a record justifying receipt of these controlled substances. Further, the Co-owner was also involved in a scheme resulting in the transfer of medications from a local hospital to his residence. On July 25, 1995, the Owner was found guilty of the felony offenses of engaging in organized criminal activity related to theft of controlled substances by a public servant, fraud, theft, and commercial violations of the controlled substances act, by the 228th District Court of Harris County, Texas. On September 21, 1995, the Owner was sentenced to serve ten years confinement and to pay a $3,000.00 fine. The Co-owner was found guilty of engaging in organized criminal activity related to the theft of controlled substances, and he was sentenced to serve seven years in prison.

Pursuant to 21 U.S.C. 823(f) and 824(a)(4), the Deputy Administrator may revoke the Respondent's DEA Certificate of Registration, and deny any pending renewal of that registration, if he determines that the continued registration would be inconsistent with the public interest. Further, 21 U.S.C. 824(a)(2) provides in relevant part that a registration may be revoked upon a finding that the registrant has been convicted, under State law, of a felony related to any controlled substance.

As to the Respondent's ''conviction,'' the DEA has previously determined that the registration of a corporate registrant may be revoked upon a finding that a natural person who is an owner, officer, or key employee, or has some responsibility for the operation of the registrant's controlled substances business, has been convicted of a felony offense relating to controlled substances. See Robert Hozdish, d/b/a/ A.J. Meyer Pharmacy, 53 FR 13338 (1998) (revoking a pharmacy's registration on the basis of the pharmacist's and owner's controlled substance-related felony conviction); see also, Taneytown Pharmacy, 51 FR 45068 (1986) and cases cited therein. Here, the record clearly establishes that the Owner, who also served as the pharmacist-in-charge, and the Co-owner of the Respondent were convicted in a Texas court of felony offenses involving controlled substances. Therefore, the Deputy Administrator concludes that a lawful basis exists for the revocation of the Respondent's DEA registration under 21 U.S.C. 824(a)(2).

As to the public interest in this matter, Section 823(f) provides that the following factors be considered:

(1) The recommendation of the appropriate State licensing board or professional disciplinary authority.

(2) The applicant's experience in dispensing, or conducting research with respect to controlled substances.

(3) The applicant's conviction record under Federal or State laws relating to the manufacture, distribution, or dispensing of controlled substances.

(4) Compliance with applicable State, Federal, or local laws relating to controlled substances.

(5) Such other conduct which may threaten the public health or safety.

These factors are to be considered in the disjunctive; the Deputy Administrator may rely on any one or a combination of factors and may give each factor the weight he deems appropriate in determining whether a registration should be revoked or an application for registration denied. See Henry J. Schwarz, Jr., M.D., 54 FR 16422 (1989). In this case, factors four and five are relevant in determining whether the Respondent's continued registration would be inconsistent with the public interest.

As to factor four, the Respondent's ''[c]ompliance with applicable State, Federal, or local laws relating to controlled substances,'' the record shows that record-keeping violations were found during a DEA audit of the Respondent. As for recordkeeping requirements, pursuant to 21 U.S.C. 827(a)(3), ''every registrant under this subchapter * * * dispensing a controlled substance or substances shall maintain, on a current basis, a complete and accurate record of each substance * * * received, sold, delivered, or otherwise disposed of by him,'' and 21 U.S.C. 827(b) provides that, ''Every inventory or other record required under this section (1) shall be in accordance with, and contain such relevant information as may be required by, regulations of the Attorney General.''

Applicable federal recordkeeping regulations also exist, and 21 C.F.R. 1304.21 requires a registrant to ''maintain on a current basis a complete and accurate record of each such substance * * * received, sold, delivered, * * * or otherwise disposed of by him.'' Further, 21 C.F.R. 1304.24 requires dispensers to maintain records for each controlled substance reflecting, among other things, the number of commercial containers received, and ''including the date of and number of containers in each receipt and the name, address, and registration number of the person from whom the containers were received,'' the number of units dispensed, with detailed information concerning the person to whom it was dispensed, and information concerning any other method of disposal of the substance.

Here, as a result of a DEA audit, the Respondent pharmacy's controlled substance records revealed significant overages of clonazepam and alprazolam, both Schedule IV controlled substances. Also, the Owner failed to provide accurate records or other documentary evidence to reconcile the amounts of controlled substances on hand with the legitimate acquisition and disposition of the medications as required by DEA regulations. Such unexplained overages were indicative of the Owner's violation of the regulated distribution system, which was established to protect the public interest by preventing diversion of such substances. DEA has previously found that a failure to maintain adequate records in a threat to the public interest and is a basis for revoking the Respondent's registration. See, generally, Taneytown Pharmacy, supra.

As to factor five, ''[s]uch other conduct which may threaten the public health or safety,'' the Deputy Administrator finds it significant that, when the Owner was questioned concerning the audit results, she ultimately provided false receiving documents with the intention of deceiving the Investigator into believing that she had legitimately received the controlled substances from Abbey Pharmaceuticals. The Owner's willingness to falsify documents pertaining to controlled substances and to deceive a DEA investigator is further evidence of the Owner's lack of trustworthiness in handling controlled substances. As the owner and primary pharmacist for the Respondent, her conduct established such a threat to the public interest as to justify the revocation of the Respondent's DEA Certificate of Registration. Therefore, the Deputy Administrator finds that the public interest is best served by revoking the Respondent's registration and by denying any pending renewal application.

Accordingly, the Deputy Administrator of the Drug Enforcement Administration, pursuant to the

authority vested in him by 21 U.S.C. 823 and 824, and 28 C.F.R. 0.100(b) and 0.104, hereby orders that DEA Certificate of Registration BM3971644, previously issued to Maxicare Pharmacy, be, and it hereby is, revoked. It is further ordered that any pending applications for renewal of said registration be, and hereby are, denied. This order is effective July 1, 1996.

Dated: May 28, 1996.

Stephen H. Greene,

Deputy Administrator.

[FR Doc. 96–13685 Filed 5–30–96; 8:45 am]

BILLING CODE 4410–09–M

DEPARTMENT OF LABOR

Employment Standards Administration

Wage and Hour Division; Minimum Wages for Federal and Federally Assisted Construction; General Wage Determination Decisions

General wage determination decisions of the Secretary of Labor are issued in accordance with applicable law and are based on the information obtained by the Department of Labor from its study of local wage conditions and data made available from other sources. They specify the basic hourly wage rates and fringe benefits which are determined to be prevailing for the described classes of laborers and mechanics employed on construction projects of a similar character and in the localities specified therein.

The determinations in these decisions of prevailing rates and fringe benefits have been made in accordance with 29 CFR Part 1, by authority of the Secretary of Labor pursuant to the provisions of the Davis-Bacon Act of March 3, 1931, as amended (46 Stat. 1494, as amended, 40 U.S.C. 276a) and of other Federal statutes referred to in 29 CFR Part 1, Appendix, as well as such additional statutes as may form time to time be enacted containing provisions for the payment of wages determined to be prevailing by the Secretary of Labor in accordance with the Davis-Bacon Act. The prevailing rates and fringe benefits determined in these decisions shall, in accordance with the provisions of the foregoing statutes, constitute the minimum wages payable on Federal and federally assisted construction projects to laborers and mechanics of the specified classes engaged on contract work of the character and in the localities described therein.

Good cause is hereby found for not utilizing notice and public comment procedure thereon prior to the issuance of these determinations as prescribed in 5 U.S.C. 553 and not providing for delay in the effective date as prescribed in that section, because the necessity to issue current construction industry wage determinations frequently and in large volume causes procedures to be impractical and contrary to the public interest.

General wage determination decisions, and modifications and supersedeas decisions thereto, contain no expiration dates and are effective from their date of notice in the Federal Register, or on the date written notice is received by the agency, whichever is earlier. These decisions are to be used in accordance with the provisions of 29 CFR Parts 1 and 5. Accordingly, the applicable decision, together with any modifications issued, must be made a part of every contract for performance of the described work within the geographic area indicated as required by an applicable Federal prevailing wage law and 29 CFR Part 5. The wage rates and fringe benefits, notice of which is published herein, and which are contained in the Government Printing Office (GPO) document entitled ''General Wage Determinations Issued The Davis-Bacon And Related Acts,'' shall be the minimum paid by contractors and subcontractors to laborers and mechanics.

Any person, organization, or governmental agency having an interest in the rates determined as prevailing is encouraged to submit wage rate and fringe benefit information for consideration by the Department. Further information and self-explanatory forms for the purpose of submitting this data may be obtained by writing to the U.S. Department of Labor, Employment Standards Administration, Wage and Hour Division, Division of Wage Determination, 200 Constitution Avenue, N.W., Room S–3014, Washington, D.C. 20210.

New General Wage Determination Decisions

The number of the decisions added to the Government Printing Office document entitled ''General Wage Determination Issued Under the Davis-Bacon and related Acts'' are listed by Volume and State:

Volume V

Oklahoma
OK960046 (May 31, 1996)

Modifications to General Wage Determination Decisions

The number of decisions listed in the Government Printing Office document entitled ''General Wage Determinations Issued Under the Davis-Bacon and Related Acts'' being modified are listed by Volume and State. Dates of publication in the Federal Register are in parentheses following the decisions being modified.

Volume I

Rhode Island
RI960001 (March 15, 1996)

Volume II

Pennsylvania
PA960008 (March 15, 1996)
PA960009 (March 15, 1996)
PA960010 (March 15, 1996)
PA960014 (March 15, 1996)
PA960021 (March 15, 1996)
PA960024 (March 15, 1996)
PA960029 (March 15, 1996)
PA960040 (March 15, 1996)
PA960060 (March 15, 1996)

Volume III

Florida
FL960017 (March 15, 1996)
Tennessee
TN960005 (March 15, 1996)
TN960058 (March 15, 1996)

Volume IV

Indiana
IN960017 (March 15, 1996)

Volume V

Oklahoma
OK960014 (March 15, 1996)
Texas
TX960015 (March 15, 1996)

Volume VI

California
CA960006 (March 15, 1996)
CA960039 (March 15, 1996)
CA960047 (March 15, 1996)
CA960088 (April 12, 1996)
Colorado
CO960001 (March 15, 1996)
CO960006 (March 15, 1996)
CO960007 (March 15, 1996)
CO960008 (March 15, 1996)
CO960009 (March 15, 1996)
CO960010 (March 15, 1996)

General wage Determination Publication

General Wage determinations issued under the Davis-Bacon and related Acts, including those noted above, may be found in the Government Printing Office (GPO) document entitled ''General Wage Determinations Issued Under The Davis-Bacon and Related Acts''. This publication is available at each of the 50 Regional Government Depository Libraries and many of the 1,400 Government Depository Libraries across the county.

The general wage determinations issued under the Davis-Bacon and related Acts are available electronically by subscription to the FedWorld Bulletin Board System of the National Technical Information Service (NTIS) of

the U.S. Department of Commerce at (703) 487–4630.

Hard-copy subscriptions may be purchased from: Superintendent of Documents, U.S. Government Printing Office, Washington, D.C. 20402, (202) 512–1800

When ordering hard-copy subscription(s), be sure to specify the State(s) of interest, since subscriptions may be ordered for any or all of the six separate volumes, arranged by State. Subscriptions include an annual edition (issued in January or February) which includes all current general wage determinations for the States covered by each volume. Throughout the remainder of the year, regular weekly updates are distributed to subscribers.

Signed at Washington, D.C. this 24th day of May 1996.

Philip J. Gloss,

Chief, Branch of Construction Wage Determinations.

[FR Doc. 96–13543 Filed 5–30–96; 8:45 am]

BILLING CODE 4510–27–M

NUCLEAR REGULATORY COMMISSION

[Docket Nos. 50–317 and 50–318]

Baltimore Gas and Electric Company; Notice of Consideration of Issuance of Amendment to Facility Operating License, Proposed No Significant Hazards Consideration Determination, and Opportunity for a Hearing

The U.S. Nuclear Regulatory Commission (the Commission) is considering issuance of an amendment to Facility Operating License Nos. DPR–53 and DPR–69, issued to Baltimore Gas and Electric Company (BGE) for operation of the Calvert Cliffs Nuclear Plant Unit Nos. 1 and 2 located in Calvert County, Maryland.

The proposed amendment would replace the mechanical stops in the inlet control valves of the containment air coolers (CACs) with a variable flow controller for the inlet control valve.

The licensee requests that this proposed amendment be considered as exigent under the criteria of 10 CFR 50.91(a)(6). The licensee states that they could not have foreseen the need for this request prior to this time. This modification is the result of a substantial proactive effort in dealing with the concerns that BGE have with their Service Water (SRW) System. The history of BGE's activities concerning the SRW System is given in Attachment (1) of the proposed amendment. This particular modification was determined to be necessary after BGE obtained data from a site stream monitor that BGE had installed to measure the rate of microfouling in the SRW heat exchangers. The data from the side stream monitor was not analyzed and available to BGE until January 17, 1996. By mid-February, BGE had determined that the installation of flow controllers on the CAC inlet valves was necessary to offset the effects of the larger than expected microfouling. BGE has committed the necessary money and resources to install this modification before the summer. Design and procurement activities were done in parallel. About mid-April, the engineering was to the stage that work could begin on the safety evaluation (SE) required by 10 CFR 50.59. Refinements to the engineering continued even as the SE was being developed. On May 24, 1996, the Plant General Manager determined that an unreviewed safety question existed for this modification. This request has been submitted as soon as practical after the determination was made.

It is important for BGE to perform this modification on the schedule set out a number of months ago. To prevent operational and safety impacts, this modification must be installed before the hot summer weather causes the Chesapeake Bay water temperature to exceed the SRW temperature limit. Historically, the Chesapeake Bay water temperature has approached or exceeded the current limit by the last week in June. As noted above, whenever the SRW heat exchangers are removed from service for cleaning, some safety-related equipment is rendered inoperable. It is important to minimize the amount of time BGE is in these more vulnerable conditions (with some safety-related equipment out-of-service). Additionally, BGE believes that reducing the power output from both units significantly during a time of high demand (high summer temperatures) is not in the best interest of the public.

Therefore, given the need to act quickly, and the determination that this change does not represent a significant hazard, BGE requests that this amendment be considered under exigent circumstances as described in 10 CFR 50.91(a)(6).

Before issuance of the proposed license amendment, the Commission will have made findings required by the Atomic Energy Act of 1954, as amended (the Act) and the Commission's regulations.

Pursuant to 10 CFR 50.91(a)(6) for amendments to be granted under exigent circumstances, the NRC staff must determine that the amendment request involves no significant hazards consideration. Under the Commission's regulations in 10 CFR 50.92, this means that operation of the facility in accordance with the proposed amendment would not (1) involve a significant increase in the probability or consequences of an accident previously evaluated; or (2) create the possibility of a new or different kind of accident from any accident previously evaluated; or (3) involve a significant reduction in a margin of safety. As required by 10 CFR 50.91(a), the licensee has provided its analysis of the issue of no significant hazards consideration, which is presented below:

1. Would not involve a significant increase in the probability or consequences of an accident previously evaluated.

The proposed modification is the result of our need to reduce the peak post-accident heat load on the service water (SRW) heat exchangers. It will replace the mechanical stops currently on the control valves which admit SRW into the containment air coolers (CACs) with a flow controller loop. By throttling the SRW to the CACs, the heat load on the SRW heat exchangers is reduced during the early phases of an accident. The increased accuracy of throttling would allow the SRW system to perform its safety function during periods of high ultimate heat sink temperatures. During the summer months, the Chesapeake Bay water (the ultimate heat sink for the units) heats up substantially during some parts of the day. At times, these high temperatures could exceed the current expected limits for the heat exchanger operation. With the more accurately throttled valves, the effect of high ultimate heat sink temperatures is reduced. The modification will ensure that the SRW heat exchangers are capable of meeting their intended safety function up to the maximum expected bay water temperature.

The safety function of the SRW System is to provide cooling to the CACs and the Emergency Diesel Generators (EDGs) following a design basis accident. With this proposed modification in place, the SRW System will continue to meet this safety function. All of the failure mechanisms for this modification have previously been evaluated and were found acceptable. However, because the proposed modification may have a higher probability of malfunction for which compensatory actions may not adequately control the consequence of failure, the probability of a malfunction of systems important to safety may be slightly increased, and this modification has been determined to be an unreviewed safety question.

The single failure of the flow controllers would not be an initiator to an accident. The system provides cooling to safety-related equipment following an accident. It supports accident mitigation functions. Therefore, this proposed modification does not significantly increase the probability of an accident previously evaluated.

The proposed modification will enhance the ability of the SRW system to respond to accident conditions under a wider range of

environmental conditions (i.e., higher ultimate heat sink temperatures). Malfunctions of the flow controller have been evaluated and determined to result in consequences that are no more severe than those previously approved. A failure of the flow controller could allow the valve to fail in a position that does not allow the SRW System to perform its safety function. Since the SRW System is redundant on each unit, a single failure of one of the flow controllers would not prevent the other redundant portion of the system from performing its safety function. The consequences of a single failure of the SRW System have been previously analyzed and these consequences do not change due to this modification.

Therefore, this proposed modification does not involve a significant increase in the probability or consequences of an accident previously evaluated.

2. Would not create the possibility of a new or different type of accident from any accident previously evaluated.

The SRW System provides cooling water to the CACs and EDGs. The purpose of the components which are affected by this modification is to mitigate accidents. The single failure of the flow controllers would not be an initiator to an accident. This modification does not change the equipment's function, or significantly alter the method of operating the equipment to be modified. The system will continue to operate in essentially the same manner as before the modification was done.

Therefore, the proposed change does not create the possibility of a new or different type of accident from any accident previously evaluated.

3. Would not involve a significant reduction in a margin of safety.

The margin of safety is reduced for this proposed modification, but not significantly. If the CAC inlet valve fails to open, the CAC on that train would continue to perform its safety function. However, the EDG on that train would receive cooling water above the design temperature and may fail to perform its safety function. The redundant EDG would provide adequate electricity to continue to perform its safety function. If the CAC inlet valve fails in the closed position, the EDG would continue to function; however, the affected CAC would not rceive adequate cooling water. The other three CACs would provide adequate cooling for the containment. Also, the Containment Spray System provides additional containment cooling as a backup to the CACs. If the CAC inlet valve fails to throttle properly, the consequences are bounded by the other two cases discussed above.

Adding a more complex component which could fail and result in a failure of the SRW System does reduce the margin of safety, but not significantly because: (1) The proposed flow controller is very reliable and not likely to fail; (2) the other redundant CAC and EDG are available to mitigate the consequence of an accident should there be a single failure of the flow controller.

Therefore, this modification does not significantly reduce the margin of safety.

The NRC staff has reviewed the licensee's analysis and, based on this review, it appears that the three standards of 10 CFR 50.92(c) are satisfied. Therefore, the NRC staff proposes to determine that the amendment request involves no significant hazards consideration.

The Commission is seeking public comments on this proposed determination. Any comments received within 15 days after the date of publication of this notice will be considered in making any final determination.

Normally, the Commission will not issue the amendment until the expiration of the 15-day notice period. However, should circumstances change during the notice period, such that failure to act in a timely way would result, for example, in derating or shutdown of the facility, the Commission may issue the license amendment before the expiration of the 15-day notice period, provided that its final determination is that the amendment involves no significant hazards consideration. The final determination will consider all public and State comments received. Should the Commission take this action, it will publish in the Federal Register a notice of issuance. The Commission expects that the need to take this action will occur very infrequently.

Written comments may be submitted by mail to the Chief, Rules Review and Directives Branch, Division of Freedom of Information and Publications Services, Office of Administration, U.S. Nuclear Regulatory Commission, Washington, DC 20555–0001, and should cite the publication date and page number of this Federal Register notice. Written comments may also be delivered to Room 6D22, Two White Flint North, 11545 Rockville Pike, Rockville, Maryland, from 7:30 a.m. to 4:15 p.m. Federal workdays. Copies of written comments received may be examined at the NRC Public Document Room, the Gelman Building, 2120 L Street, NW., Washington, DC.

The filing of requests for hearing and petitions for leave to intervene is discussed below.

By July 1, 1996, the licensee may file a request for a hearing with respect to issuance of the amendment to the subject facility operating license and any person whose interest may be affected by this proceeding and who wishes to participate as a party in the proceeding must file a written request for a hearing and a petition for leave to intervene. Requests for a hearing and a petition for leave to intervene shall be filed in accordance with the Commission's ''Rules of Practice for Domestic Licensing Proceedings'' in 10 CFR Part 2. Interested persons should consult a current copy of 10 CFR 2.714 which is available at the Commission's Public Document Room, the Gelman Building, 2120 L Street, NW., Washington, DC, and at the local public document room located at the Calvert County Library, Prince Frederick, Maryland 20678. If a request for a hearing or petition for leave to intervene is filed by the above date, the Commission or an Atomic Safety and Licensing Board, designated by the Commission or by the Chairman of the Atomic Safety and Licensing Board Panel, will rule on the request and/or petition; and the Secretary or the designated Atomic Safety and Licensing Board will issue a notice of hearing or an appropriate order.

As required by 10 CFR 2.714, a petition for leave to intervene shall set forth with particularity the interest of the petitioner in the proceeding, and how that interest may be affected by the results of the proceeding. The petition should specifically explain the reasons why intervention should be permitted with particular reference to the following factors: (1) The nature of the petitioner's right under the Act to be made a party to the proceeding; (2) the nature and extent of the petitioner's property, financial, or other interest in the proceeding; and (3) the possible effect of any order which may be entered in the proceeding on the petitioner's interest. The petition should also identify the specific aspect(s) of the subject matter of the proceeding as to which petitioner wishes to intervene. Any person who has filed a petition for leave to intervene or who has been admitted as a party may amend the petition without requesting leave of the Board up to 15 days prior to the first prehearing conference scheduled in the proceeding, but such an amended petition must satisfy the specificity requirements described above.

Not later than 15 days prior to the first prehearing conference scheduled in the proceeding, a petitioner shall file a supplement to the petition to intervene which must include a list of the contentions which are sought to be litigated in the matter. Each contention must consist of a specific statement of the issue of law or fact to be raised or controverted. In addition, the petitioner shall provide a brief explanation of the bases of the contention and a concise statement of the alleged facts or expert opinion which support the contention and on which the petitioner intends to rely in proving the contention at the hearing. The petitioner must also provide references to those specific sources and documents of which the

petitioner is aware and on which the petitioner intends to rely to establish those facts or expert opinion. Petitioner must provide sufficient information to show that a genuine dispute exists with the applicant on a material issue of law or fact. Contentions shall be limited to matters within the scope of the amendment under consideration. The contention must be one which, if proven, would entitle the petitioner to relief. A petitioner who fails to file such a supplement which satisfies these requirements with respect to at least one contention will not be permitted to participate as a party.

Those permitted to intervene become parties to the proceeding, subject to any limitations in the order granting leave to intervene, and have the opportunity to participate fully in the conduct of the hearing, including the opportunity to present evidence and cross-examine witnesses.

If the amendment is issued before the expiration of the 30-day hearing period, the Commission will make a final determination on the issue of no significant hazards consideration. If a hearing is requested, the final determination will serve to decide when the hearing is held.

If the final determination is that the amendment request involves no significant hazards consideration, the Commission may issue the amendment and make it immediately effective, notwithstanding the request for a hearing. Any hearing held would take place after issuance of the amendment.

If the final determination is that the amendment request involves a significant hazards consideration, any hearing held would take place before the issuance of any amendment.

A request for a hearing or a petition for leave to intervene must be filed with the Secretary of the Commission, U.S. Nuclear Regulatory Commission, Washington, DC 20555–0001, Attention: Docketing and Services Branch, or may be delivered to the Commission's Public Document Room, the Gelman Building, 2120 L Street, NW., Washington, DC, by the above date. Where petitions are filed during the last 10 days of the notice period, it is requested that the petitioner promptly so inform the Commission by a toll-free telephone call to Western Union at 1–(800) 248–5100 (in Missouri 1–(800) 342–6700). The Western Union operator should be given Datagram Identification Number N1023 and the following message addressed to Jocelyn A. Mitchell: petitioner's name and telephone number, date petition was mailed, plant name, and publication date and page number of this Federal Register notice. A copy of the petition should also be sent to the Office of the General Counsel, U.S. Nuclear Regulatory Commission, Washington, DC 20555–0001, and to Jay E. Silbert, Esquire, Shaw, Pittman, Potts and Trowbridge, 2300 N Street, NW., Washington, DC 20037, attorney for the licensee.

Nontimely filings of petitions for leave to intervene, amended petitions, supplemental petitions and/or requests for hearing will not be entertained absent a determination by the Commission, the presiding officer or the presiding Atomic Safety and Licensing Board that the petition and/or request should be granted based upon a balancing of the factors specified in 10 CFR 2.714(a)(1) (i)–(v) and 2.714(d).

For further details with respect to this action, see the application for amendment dated May 28, 1996, which is available for public inspection at the Commission's Public Document Room, the Gelman Building, 2120 L Street, NW., Washington, DC, and at the local public document room, located at the Calvert County Library, Prince Frederick, Maryland 20678.

Dated at Rockville, Maryland, this 29 day of May 1996.

For the Nuclear Regulatory Commission.

Alexander W. Dromerick,

Senior Project Manager, Project Directorate I–1, Division of Reactor Projects—I/II, Office of Nuclear Reactor Regulation.

[FR Doc. 96–13793 Filed 5–30–96; 8:45 am]

BILLING CODE 7590–01–P

[Docket No. 999–90004; License No. KS 22–B274–0;1 EA 95–276]

Bemis Construction, Inc.; Order Imposing Civil Monetary Penalty

I

Bemis Construction, Inc., (Bemis) is the holder of Radioactive Materials License No. 22–B274–01, a specific license issued by the state of Kansas, an Agreement State on September 30, 1987. The license authorizes Bemis to possess and use sealed radioactive sources in portable nuclear density gauges at a specific location in Great Bend, Kansas and at temporary jobsites in the State of Kansas in accordance with the conditions specified in the license. Pursuant to 10 CFR 150.20 and its license, a general license is granted to Agreement State licensees to conduct the same activities in areas under NRC jurisdiction (referred to as ''reciprocity''), provided that the NRC is notified and the other provisions of 10 CFR 150.20 are followed.

II

An inspection and investigation of Bemis's activities were conducted during August 17, 1995, through January 3, 1996. The results of the inspection and investigation, documented in a report issued on January 11, 1996, indicated that Bemis had not conducted its activities in full compliance with NRC requirements. The violations identified included use and storage of licensed material in NRC jurisdiction without having complied with the requirements for reciprocity. Bemis responded to the inspection report by letter dated January 22, 1996. In its letter, Bemis stated that the reason for the violation was an understanding that the gauge could be used in Oklahoma for short periods of time. A written Notice of Violation and Proposed Imposition of Civil Penalty (Notice) was served upon Bemis by letter dated March 19, 1996. The Notice stated the nature of the violation, the provisions of the NRC requirements that Bemis had violated, and the amount of the civil penalty proposed for the violation.

Bemis responded to the Notice by letter dated April 17, 1996 (Reply to a Notice of Violation and Answer to a Notice of Violation). In its response, Bemis stated that there was an apparent mistaken belief that a reciprocity permit with the NRC was not required under certain conditions. The letter also requested mitigation of the proposed civil penalty based on assurances that Bemis is in compliance now and will not violate the cited requirements in the future.

III

After consideration of Bemis's response and the statements of fact, explanation, and argument for mitigation contained therein, the NRC staff has determined, as set forth in the Appendix to this Order, that the violations occurred as described in the Notice, and that the penalty proposed for the violations should be imposed by order.

IV

In view of the foregoing and pursuant to Section 234 of the Atomic Energy Act of 1954, as amended (Act), 42 U.S.C. 2282, and 10 CFR 2.205, It is hereby ordered that:

Bemis Construction, Inc., pay a civil penalty in the amount of $2,500 within 30 days of the date of this Order, by check, draft, money order, or electronic transfer, payable to the Treasurer of the United States and mailed to James Lieberman, Director, Office of

Enforcement, U.S. Nuclear Regulatory Commission, One White Flint North, 11555 Rockville Pike, Rockville, MD 20852–2738.

V

Bemis may request a hearing within 30 days of the date of this Order. Where good cause is shown, consideration will be given to extending the time to request a hearing. A request for extension of time must be made in writing to the Director, Office of Enforcement, U.S. Nuclear Regulatory Commission Washington, D.C. 20555, and include a statement of good cause for the extension. A request for a hearing should be clearly marked as a ''Request for an Enforcement Hearing'' and shall be addressed to the Director, Office of Enforcement, U.S. Nuclear Regulatory Commission Washington, D.C. 20555, with a copy to the Commission's Document Control Desk, Washington, D.C. 20555. Copies also shall be sent to the Assistant General Counsel for Hearings and Enforcement at the same address and to the Regional Administrator, NRC Region IV, 611 Ryan Plaza Drive, Suite 400, Arlington, Texas 76011.

If a hearing is requested, the Commission will issue an Order designating the time and place of the hearing. If Bemis fails to request a hearing within 30 days of the date of this Order (or if written approval of an extension of time in which to request a hearing has not been granted), the provisions of this Order shall be effective without further proceedings. If payment has not been made by that time, the matter may be referred to the Attorney General for collection.

In the event Bemis requests a hearing as provided above, the issue to be considered at such hearing shall be: whether, on the basis of the violation admitted by Bemis, this Order should be sustained.

Dated at Rockville, Maryland this 23rd day of May 1996.

For the Nuclear Regulatory Commission.

James Lieberman,

Director, Office of Enforcement.

Appendix—Evaluation and Conclusions

On March 19, 1996, a Notice of Violation and Proposed Imposition of Civil Penalty (Notice) in the amount of $2,500 was issued to Bemis Construction, Inc., (Bemis) for a violation identified during an NRC inspection and investigation. Bemis responded to the Notice in a letter dated April 17, 1996. Bemis admitted the violation but requested mitigation of the proposed civil penalty based on its contention that the violation was not intentional and on assurances that Bemis is in compliance now and will not, in the future, violate the rules which were cited.

Restatement of Violation Assessed a Civil Penalty

10 CFR 30.3 requires in relevant part, that no person shall possess or use byproduct material except as authorized by a specific or general license issued by the NRC.

10 CFR 150.20(a) provides in part that any person who holds a specific license from an Agreement State is granted an NRC general license to conduct the same activity in non-Agreement States subject to the provisions of 10 CFR 150.20(b).

10 CFR 150.20(b)(1) requires, in part, that any person engaging in activities in non-Agreement States shall, at least 3 days before engaging in each such activity, file 4 copies of NRC Form-241, ''Report of Proposed Activities in Non-Agreement States,'' with the Regional Administrator of the appropriate NRC regional office.

Contrary to the above,

A. From March 1991 through August 1992, Bemis Construction, Inc. a licensee of Kansas, used cesium-137 and americium-241 sealed sources in Oklahoma, a non-Agreement State, without a specific license issued by the NRC and without filing Form-241 with the NRC.

B. From March 1991 through July 1995, Bemis Construction, Inc. a licensee of Kansas, stored cesium-137 and americium-241 sealed sources in Oklahoma, a non-Agreement State, without a specific license issued by the NRC and without filing Form-241 with the NRC. (01013)

This is a Severity Level III violation (Supplement VI). Civil Penalty—$2,500

Summary of Bemis's Request for Mitigation

Bemis responded to the violation in a letter from Mr. Thomas J. Berscheidt, Attorney At Law, dated April 17, 1996. Mr. Berscheidt stated that he represents Bemis and that he had reviewed the March 19, 1996, letter from the NRC and the enclosed Notice. Mr. Berscheidt's letter stated that there was no intent to avoid compliance with the regulations. There was ''simply a misunderstanding and lack of information concerning these regulations.'' Bemis stated that it will not, now or in the future, regardless of the oversight or lack of knowledge, intentionally violate any of the rules and regulations of the NRC. Further, Bemis's response stated that it is recognized that each party is responsible for being aware of the rules and regulations, but there are times when, regardless of the effort and honest intent of any individual or corporation, all rules and regulations cannot be known or at least readily obtained and usually the awareness factor does not surface until the violation has been identified. With the assurance that Bemis is in compliance and will not violate the rules which were cited, the licensee requested mitigation of the civil penalty. The letter also noted that this was the first time that Bemis has violated NRC requirements.

NRC Evaluation of Licensee's Request for Mitigation

The Kansas license provided that material ''may be used at Railroad & McKinley, Great Bend, Kansas and at temporary job sites of the licensee anywhere in the State of Kansas where the State of Kansas, Department of Health and Environment maintains jurisdiction for regulating the use of radioactive material.'' This provision does not authorize operations in the State of Oklahoma, which is under NRC jurisdiction. Therefore, it is not clear why there was any misunderstanding. The fact that Bemis did not attempt to verify its understanding by merely telephoning the NRC, or make any other effort to verify its understanding, was the basis for NRC's conclusion that the violation was the result of, at least, careless disregard for the involved requirements.

Even in the absence of willfulness, the NRC considers the failure to obtain authorization to use byproduct materials in areas under its jurisdiction to be a matter of significant regulatory concern. This is because the failure to obtain NRC authorization for such activities denies the NRC the opportunity to assure that the activities are conducted in compliance with all NRC requirements. Furthermore, the failure to obtain authorization resulted in Bemis's failure to pay fees in each of the years that Bemis was in violation. We note that the civil penalty is approximately the same amount as the delinquent fees.

Bemis concludes its April 17 letter with its assurances of compliance (with the cited requirements), now and in the future, and respectfully requested that the civil penalty be reduced. The NRC's Enforcement Policy does provide for mitigation of civil penalties under certain conditions, through the consideration of the identification and corrective action factors (reference Section VI.B.2 of the enforcement policy). The NRC's March 19, 1996 letter that accompanied the Notice described the NRC's analysis of these identification and corrective action factors, and concluded that the base penalty should be assessed. The licensee's April 17 letter did not provide any additional information that would change the civil penalty assessment.

NRC Conclusion

After consideration of all of the arguments made by Bemis, the NRC concludes that the civil penalty that was proposed should not be mitigated.

[FR Doc. 96–13673 Filed 5–30–96; 8:45 am]

BILLING CODE 7590–01–P

OFFICE OF PERSONNEL MANAGEMENT

Submission for OMB Review; Comment Request for Review of an Expiring Information Collection Reemployment of Annutants, 5 CFR 837.103

AGENCY: Office of Personnel Management.

ACTION: Notice.

SUMMARY: In accordance with the Paperwork Reduction Act of 1995 (Pub. L. 104–13, May 22, 1995), this notice

announces that the Office of Personnel Management (OPM) will submit to the Office of Management and Budget a request for a clearance of an expiring information collection. Section 837.103 of Title 5, Code of Federal Regulations, requires agencies to collect information from retirees who become employed in Government positions. Agencies need to collect timely information regarding the type and amount of annuity being received so the correct rate of pay can be determined. Agencies provide this information to OPM so a determination can be made whether the reemployed retiree's annuity must be terminated.

We estimate 3000 reemployed retirees are asked this information annually. It takes each reemployed retiree approximately 1 minute to complete for an annual estimated burden of 50 hours.

For copies of this proposal, contact Jim Farron on (202) 418–3208, or E–Mail to jmfarron@,mail.opm.gov

DATES: Comments on this proposal should be received on or before July 1, 1996.

ADDRESSES: Send or deliver comments to—

John Landers, Chief, Retirement Policy Division, Retirement and Insurance Service, 1900 E Street, NW., Room 4351, Washington, DC 20415–0001

and

Joseph Lackey, OPM Desk Officer, Office of Information & Regulatory Affairs, Office of Management and Budget, New Executive Office Building NW., Room 10235, Washington, DC 20503.

FOR INFORMATION REGARDING ADMINISTRATIVE COORDINATION—CONTACT: Mary Beth Smith-Toomey, Team Leader, Management Services Division, (202) 606–0623.

Office of Personnel Management.

Lorraine A. Green,

Deputy Director.

[FR Doc. 96–13679 Filed 5–30–96; 8:45 am]

BILLING CODE 6325–01–M

Submission for OMB Review; Comment Request Review of a Revised Information Collection: Forms RI 34–1 and RI 34–3

AGENCY: Office of Personnel Management.

ACTION: Notice.

SUMMARY: In accordance with the Paperwork Reduction Act of 1995 (Pub. L. 104–13, May 22, 1995), this notice announces that the Office of Personnel Management has submitted to the Office of Management and Budget a request for clearance of a revised information collection: Forms RI 34–1 and RI 34–3. RI 34–1, Financial Resources Questionnaire, collects detailed financial information for use by OPM in determining whether to agree to a waiver, compromise, or adjustment of the collection of erroneous payments from the Civil Service Retirement and Disability Fund. RI 34–3, Notice of Debt Due Because of Annuity Overpayment, informs the annuitant that a debt is due, describes the cause for the overpayment, and collects information from the annuitant regarding payment of the debt.

Approximately 1,561 RI 34–1 and 520 RI 34–3 forms will be completed per year. Each form requires approximately 1 hour to complete. The annual burden is 1,561 hours and 520 hours respectively.

For copies of this proposal, contact Jim Farron on (202) 418–3208, or E-mail to jmfarron@mail.opm.gov

DATES: Comments on this proposal should be received on or before July 1, 1996.

ADDRESSES: Send or deliver comments to—

Lorraine E. Dettman, Chief, Operations Support Division, Retirement and Insurance Service, U.S. Office of Personnel Management, 1900 E Street NW., Room 3349, Washington, DC 20415

and

Joseph Lackey, OPM Desk Officer, Office of Information & Regulatory Affairs, Office of Management & Budget, New Executive Office Building NW., Room 10235, Washington, DC 20503.

FOR INFORMATION REGARDING ADMINISTRATIVE COORDINATION—CONTACT: Mary Beth Smith-Toomey, Management Services Division, (202) 606–0623.

Office of Personnel Management.

Lorraine A. Green,

Deputy Director.

[FR Doc. 96–13680 Filed 5–30–96; 8:45 am]

BILLING CODE 6325–01–M

Submission for OMB Review; Comment Request for Review of an Expiring Information Collection: SF 2823

AGENCY: Office of Personnel Management.

ACTION: Notice.

SUMMARY: In accordance with the Paperwork Reduction Act of 1995 (Pub. L. 104–13, May 22, 1995), this notice announces that the Office of Personnel Management will submit to the Office of Management and Budget a request for a clearance of an expiring information collection. SF 2823, Designation of Beneficiary for Federal Employees Group Life Insurance, is used by any Federal employee or retiree covered by the Federal Employees Group Life Insurance Program to instruct the Office of Federal Employees Group Life Insurance how to distribute the proceeds of his or her life insurance when the statutory order of precedence does not meet his or her needs.

We estimate 1,000 SF 2823 forms are completed annually by annuitants. Each form takes approximately 15 minutes to complete for an annual estimated burden of 250 hours.

For copies of this proposal, contact Jim Farron on (202) 418–3208, or E-Mail to jmfarron@mail.opm.gov

DATES: Comments on this proposal should be received on or before July 1, 1996.

ADDRESSES: Send or deliver comments to—

Kenneth H. Glass, Chief, Insurance Operations Division, Retirement and Insurance Service, 1900 E Street NW., Room 3415, Washington, DC 20415–0001

and

Joseph Lackey, OPM Desk Officer, Office of Information & Regulatory Affairs, Office of Management and Budget, New Executive Office Building, NW., Room 10235, Washinton, DC 20503.

FOR INFORMATION REGARDING ADMINISTRATIVE COORDINATION—CONTACT: Mary Beth Smith-Toomey, Team Leader, Management Services Division, (202) 606–0623.

Office of Personnel Management.

Lorraine A. Green,

Deputy Director.

[FR Doc. 96–13681 Filed 5–30–96; 8:45 am]

BILLING CODE 6325–01–M

SECURITIES AND EXCHANGE COMMISSION

[Investment Company Act Release No. 21983; International Series Release No. 984/812–9966]

Bankers Trust Australia Limited; Notice of Application

May 24, 1996.

AGENCY: Securities and Exchange Commission (''SEC'').

ACTION: Notice of application for exemption under the Investment Company Act of 1940 (the ''Act'').

APPLICANT: Bankers Trust Australia Limited (''BTAL'').

RELEVANT ACT SECTIONS: Order requested under section 6(c) for an exemption from section 17(f).

SUMMARY OF APPLICATION: BTAL requests an order to permit it to maintain foreign securities and other assets of U.S. registered investment companies in the custody of Pendal Nominees Pty. Limited (''Pendal Nominees''), an indirect, wholly-owned subsidiary of BTAL.

FILING DATE: The application was filed on January 30, 1996, and amended on May 3, 1996.

HEARING OR NOTIFICATION OF HEARING: An order granting the application will be issued unless the SEC orders a hearing. Interested persons may request a hearing by writing to the SEC's Secretary and serving applicant with a copy of the request, personally or by mail. Hearing requests should be received by the SEC by 5:30 p.m. on June 18, 1996, and should be accompanied by proof of service on applicant, in the form of an affidavit or, for lawyers, a certificate of service. Hearing requests should state the nature of the writer's interest, the reason for the request, and the issues contested. Persons may request notification of a hearing by writing to the SEC's Secretary.

ADDRESSES: Secretary, SEC, 450 Fifth Street NW., Washington, D.C. 20549. Applicant: BTAL, The Chifley Tower, Level 15, 2 Chifley Square, Sydney NSW 2000, Australia, with copies to Dana L. Platt, Esq., Kirkpatrick & Lockhart LLP, 1251 Avenue of the Americas—45th Floor, New York, New York 10020.

FOR FURTHER INFORMATION CONTACT: Mercer E. Bullard, Staff Attorney, (202) 942–0565, or Allison E. Baur, Branch Chief, (202) 942–0564 (Division of Investment Management, Office of Investment Company Regulation).

SUPPLEMENTARY INFORMATION: The following is a summary of the application. The complete application may be obtained for a fee at the SEC's Public Reference Branch.

Applicant's Representations

1. BTAL is bank organized under the laws of Australia and regulated by the Reserve Bank of Australia. As of December 31, 1995, BTAL had shareholders' equity of approximately $770 million. BTAL is a wholly-owned, indirect subsidiary of Bankers Trust Company (''BTCo'').

2. BTCo is a New York State chartered bank and a member of the Federal Reserve System. As of December 31, 1995, BTCo had aggregate capital, surplus, and undivided profits in excess of $4.9 billion.

3. Pendal Nominees, a wholly-owned, indirect subsidiary of BTAL and BTCo, was incorporated in Australia in 1971. Although Pendal Nominees is a distinct legal entity, it is administered as part of BTAL, shares office space with BTAL; and all of its representatives are employees of BTAL. Pendal Nominees has provided custody and trustee services for BTAL's Funds Management Division since 1985. Pendal Nominees has shareholders' equity of less than $100 million.

4. BTAL requests an order under section 6(c) of the Act granting exemptive relief from section 17(f) of the Act for itself, Pendal Nominees, any investment company registered under the Act other than an investment registered under section 7(d) of the Act (''Investment Company''), and any custodian for an Investment Company to the extent necessary to permit BTAL, any Investment Company, or any custodian for an Investment Company to maintain foreign securities, cash or cash equivalents (collectively ''Assets'') in the custody of Pendal Nominees.

Applicant's Legal Analysis

1. Section 6(c) of the Act provides that the SEC may exempt any person, security, or transaction from any provision of the Act if and to the extent that such exemption is necessary or appropriate in the public interest and consistent with the protection of investors and the purposes fairly intended by the policy and provisions of the Act.

2. Section 17(f) of the Act requires every registered management investment company to place and maintain its securities and similar investments in the custody of certain enumerated entities. Section 17(f) effectively restricts entities located outside of the United States that may act as custodians for Investment Companies to overseas branches of domestic banks.

3. Rule 17f–5 under the Act expands the group of entities located outside the United States that are permitted to serve as custodians for registered management investment companies. These entities, among other things, must qualify as ''Eligible Foreign Custodians.'' Rule 17f–5(c)(2)(ii) defines the term ''Eligible Foreign Custodian'' to include a majority-owned direct or indirect subsidiary of a qualified U.S. bank or bank-holding company that is incorporated or organized under the laws of a country other than the United States and that has shareholders' equity in excess of $100 million as of the close of its most recently completed fiscal year. The rule defines the term ''Qualified U.S. Bank'' to include a banking institution organized under the laws of the United States that has an aggregate capital, surplus, and undivided profits of not less than $500,000.

4. BTAL and Pendal Nominees are incorporated under the laws of Australia and are wholly-owned indirect subsidiaries of BTCo, which is a ''Qualified U.S. Bank'' under rule 17f–5. BTAL has shareholders' equity in excess of $100 million and thus qualifies as an Eligible Foreign Custodian under rule 17f–5(c)(2)(ii). Pendal Nominees, however, does not meet the minimum shareholders' equity requirement under rule 17f–5(c)(2)(ii). Consequently, Pendal Nominees does not qualify as an Eligible Foreign Custodian under rule 17f–5 and, absent exemptive relief, could not serve as custodian for an Investment Company.

5. BTAL contends that the terms of the foreign custody arrangements, as described in the conditions set forth below, will adequately protect Investment Companies and their shareholders against loss. BTAL believes that the requested relief is necessary and appropriate in the public interest and consistent with the protection of investors and the purposes fairly intended by the policies and provisions of the Act.

Applicant's Conditions

BTAL agrees, as conditions to the requested exemptive relief, that:

1. The foreign custody arrangements proposed with respect to Pendal Nominees will satisfy the requirements of rule 17f–5 in all respects other than with regard to the minimum shareholders' equity requirement for an eligible foreign custodian.

2. BTAL currently satisfies and will continue to satisfy all requirements of rule 17f–5, including the minimum shareholders' equity requirement of rule 17f–5(c)(2)(ii).

3. Pendal Nominees currently satisfies all requirements of rule 17f–5, except for the minimum shareholders' equity requirement of rule 17f–5(c)(2)(ii).

4. BTAL will deposit Assets in Australia with Pendal Nominees only in accordance with a three-party contractual agreement that will remain in effect at all times during which Pendal Nominees fails to meet the requirements of Rule 17f–5 relating to minimum shareholders' equity. The agreement will be among Pendal Nominees, BTAL, and the Investment Company or the custodian for the Investment Company for which BTAL acts as subcustodian. Under the

agreement, BTAL will provide specified custodial or subcustodial services for the Investment Company or custodian and will delegate to Pendal Nominees such of BTAL's duties and obligations as will be necessary to permit Pendal Nominees to hold the Assets custody in Australia. The agreement will further provide that BTAL will be liable for any loss, damage, cost, expense, liability, or claim arising out of or in connection with the performance by Pendal Nominees of its responsibilities under the agreement to the same extent as if BTAL had been required to provide custody services under such agreement.

For the SEC, by the Division of Investment Management, under delegated authority.

Margaret H. McFarland,

Deputy Secretary.

[FR Doc. 96–13696 Filed 5–30–96; 8:45 am]

BILLING CODE 8010–01–M

[Release No. 34–37244; File No. SR–Philadep–96–07]

Self-Regulatory Organizations; Philadelphia Depository Trust Company; Notice of Filing of a Proposed Rule Change To Establish a Separate Participant Category for Inactive Accounts

May 24, 1996.

Pursuant to Section 19(b)(1) of the Securities Exchange Act of 1934 (''Act''),[1] notice is hereby given that on May 8, 1996, the Philadelphia Depository Trust Company (''Philadep'') filed with the Securities and Exchange Commission (''Commission'') the proposed rule change (File No. SR–Philadep–96–07) as described in Items I, II, and III below, which items have been prepared primarily by Philadep. The Commission is publishing this notice to solicit comments on the proposed rule change from interested persons.

I. Self-Regulatory Organization's Statement of the Terms of Substance of the Proposed Rule Change

The purpose of the proposed rule change is to amend Philadep's rules to establish a separate participant category for inactive accounts and to amend the participants fund formulas with respect to such inactive accounts. Specifically, the proposed rule change will define the term ''Inactive Account'' and will set forth the mechanism for detecting a change in a participant's status from inactive to active and for the immediate collection of the additional required participants fund contribution at such time.

[1] 15 U.S.C. 78s(b)(1) (1988).

II. Self-Regulatory Organization's Statement of the Purpose of, and Statutory Basis for, the Proposed Rule Change

In its filing with the Commission, Philadep included statements concerning the purpose of and basis for the proposed rule change and discussed any comments it received on the proposed rule change. The text of these statements may be examined at the places specified in Item IV below. Philadep has prepared summaries, set forth in sections (A), (B), and (C) below, of the most significant aspects of such statements.

(A) Self-Regulatory Organization's Statement of the Purpose of, and Statutory Basis for, the Proposed Rule Change

Philadep proposes to amend its rules with respect to the minimum cash deposit contribution of its inactive participants to be set at the uniform rate of $5,000 instead of at the previously approved rate of $10,000.[2] ''Inactive Accounts'' are proposed to be defined as an account which conducts de minimis activity, currently established to be less than $100 in monthly billing activities.

Philadep proposes to adjust its Inactive Account contribution to the participants fund from $10,000 to $5,000. In proposing this amendment, Philadep recognizes that inactive accounts pose virtually no risk to the clearing corporation so long as they remain in such inactive status. In this regard, Philadep has established procedures to detect a change in a participant's status from inactive to active and for the immediate collection of the additional required participants fund contribution at such time.

Philadep will monitor its participants' account activities to assure that all participants post the requisite participants fund contributions. Philadep evaluates the nature and financial integrity of all participants of Philadep, even if they initially establish only Inactive Accounts. Philadep evaluates prospective participants, develops a customer profile, assesses the firm's capital adequacy, determines the initial participants fund contribution, contacts the firm's Designated Examining Authority for a review of its regulatory history, and presents any and all pertinent information collected to Philadep's Admissions Committee. The Admissions Committee ultimately makes the determination about whether to admit the participants and directs managements where appropriate to gather additional information so that the Committee can make such a determination. After admission, Philadep monitors participants' account activities to assure that the proper participants fund contribution is being collected from each participant.

Specifically with respect to Inactive Accounts, Philadep's Finance and Administration (''F&A'') Department will identify for Philadep's Operations Department which specific accounts are currently inactive. Thereafter, the Operations Department will monitor on a daily basis a report which reflects daily deposit, transfer, and miscellaneous deliver order (''MDO'') activity of such Inactive Accounts. Specifically, the Operations Department will generate a report that maintains cumulative total of deposits, transfers, and MDOs occurring in each Inactive Account for each monthly billing cycle.[3] If that total exceeds forty but is less than seventy-five for any Inactive Account in any given month, the Operations Department will immediately notify the F&A Department and Philadep's compliance officer. The F&A Department will verify this activity and will immediately call and send a letter to the affected participant informing the participant that it must wire the additional participants fund contributions associated with an active account by the next business day or cease doing any further activity in the account for the remainder of the month. If the participant's total exceeds seventy-five transfers, deposits, and MDOs, the participants must wire additional participants fund contributions associated with an active account by the next business day. The seventy-five count threshold serves as a reliable proxy to determine $100 of billing activity. In this regard, the most expensive activity among deposits, transfers, and MDOs, multiplied by 75, typically generates less than $100 in monthly billings. A participant's failure to wire the additional participants fund contributions in compliance with the aforementioned procedures subjects the participant to a $500 fine for the first offense and a $2,000 fine for the second offense occurring during the same calendar year. If the participant does not wire the additional participants fund contribution to Philadep by the next business day, Philadep will disallow

[2] Securities Exchange Act Release No. 36876 (February 22, 1996), 61 FR 7841 [SR–Philadep–95–08] (order granting partial temporary approval and partial permanent approval of a proposed rule change).

[3] This report will be distribute on a daily basis to Philadep management and Philadep's compliance officer.

any further business in the account beginning on the next business day after the additional contribution was due. Accordingly, an offense as contemplated by the foregoing fine schedule refers to the number of times that the account was inactivated from conducting any further business for failure to furnish Philadep with the additional contribution during a calendar year.

Once active, an account will be routinely subject to the normal review and update process on a monthly basis, and the F&A Department will recalculate each participant's participants fund deposit requirement at the end of each month based upon the participant's previous three months activity, prior to the most recent month.

Philadep believes the proposed rule change is consistent with Section 17A of the Act and the rules and regulations thereunder because the proposal should help to safeguard securities and funds in their custody or control or for which they are responsible and foster cooperation and coordination with persons engaged in the clearance and settlement of securities transactions.

(B) Self-Regulatory Organization's Statement on Burden on Competition

Philadep believes that the proposed rule change will not impose any burden on competition not contemplated within the parameters of the Act.

(C) Self-Regulatory Organization's Statement on Comments on the Proposed Rule Change Received from Members, Participants, or Others

No written comments relating to the proposed rule change have been received. Philadep will notify the Commission of any written comments received by Philadep.

III. Date of Effectiveness of the Proposed Rule Change and Timing for Commission Action

Within thirty-five days of the date of publication of this notice in the Federal Register or within such longer period (i) as the Commission may designate up to ninety days of such date if it finds such longer period to be appropriate and publishes its reasons for so finding or (ii) as to which Philadep consents, the Commission will:

(a) By order approve such proposed rule change or

(b) Institute proceedings to determine whether the proposed rule change should be disapproved.

IV. Solicitation of Comments

Interested persons are invited to submit written data, views, and arguments concerning the foregoing. Persons making written submissions should file six copies thereof with the Secretary, Securities and Exchange Commission, 450 Fifth Street, N.W., Washington, D.C. 20549. Copies of the submission, all subsequent amendments, all written statements with respect to the proposed rule change that are filed with the Commission, and all written communications relating to the proposed rule change between the Commission and any person, other than those that may be withheld from the public in accordance with the provisions of 5 U.S.C. § 552, will be available for inspection and copying in the Commission's Public Reference Room, 450 Fifth Street, N.W., Washington, D.C. 20549. Copies of such filing will also be available for inspection and copying at the principal office of Philadep. All submissions should refer to the file number SR–Philadep–96–07 and should be submitted by June 21, 1996.

For the Commission by the Division of Market Regulation, pursuant to delegated authority.[4]

Margaret H. McFarland,

Deputy Secretary.

[FR Doc. 96–13694 Filed 5–30–96; 8:45 am]

BILLING CODE 8010–01–M

[Release No. 34–37234; File No. SR–PHILADEP–96–06]

Self-Regulatory Organizations; Philadelphia Depository Trust Company; Notice of Filing and Immediate Effectiveness of Proposed Rule Change to Amend the Fee Schedule for the Legal Deposit Service.

May 21, 1996.

Pursuant to Section 19(b)(1) of the Securities Exchange Act of 1934 (''Act'')[1], notice is hereby given that on April 1, 1996, the Philadelphia Depository Trust Company (''Philadep'') filed with the Securities and Exchange Commission (''Commission'') the proposed rule change (File No. SR–PHILADEP–96–06) as described in Items I, II, and III below, which Items have been prepared primarily by Philadep. The Commission is publishing this notice to solicit comments on the proposed rule change from interested parties.

I. Self-Regulatory Organization's Statement of the Terms of Substance of the Proposed Rule Change

Philadep proposes to consolidate and modify the fees and the underlying volume categories for its Legal Deposit Service.

II. Self-Regulatory Organization's Statement of the Purpose of, and Statutory Basis for, the Proposed Rule Change

In its filing with the Commission, Philadep included statements concerning the purposes of and the basis for the proposed rule change and discussed any comments it received on the proposed rule change. The text of these statements may be examined at the places specified in Item IV below. Philadep has prepared summaries, as set forth in sections (A), (B), and (C) below, of the most significant aspects of these statements.[2]

(A) Self-Regulatory Organization's Statement of the Purpose of, and the Statutory Basis for, the Proposed Rule Change

Philadep proposes to modify its existing fees for its Legal Deposit Service. Under the existing schedule, medium volume depositors pay significantly greater costs than high volume depositors. In order to attract new medium volume business while offering its current users more cost competitive pricing, Philadep is consolidating the number of categories for its Legal Deposit Service and modifying the fees that the medium volume participants pay for this service.

The text of the proposed rule change is as follows:

Philadelphia Depository Trust Company—Schedule of Fees

Additions are *italicized;* deletions [bracketed]

5. Legal Deposits

Processing fees are based upon monthly deposit volume:

Volume Level:	
[0–100	$8.50.
101–500	$6.00.
501–1,000	$5.50.
1,001–1,700	$5.00.
1,701–2,500	$4.50.
2,501–3,000	$3.50 flat fee for all legal deposits.
3,001 and over	$2.75 flat fee for all legal deposits.]
1–300	*$8.50*
301–3000	*$3.50*
3001 and over	*$2.75*

No charge for deposit rejects. Transfer agent charges will be passed through to the Participant on an item for item basis.

Philadep believes the proposed change complies with Section 17A of the Act because it provides for the

---

[4] 17 CFR 200.30–3(a)(12) (1995).

[1] 15 U.S.C. § 78s(b)(1) (1988).

[2] The Commission has modified the text of the summaries prepared by Philadep.

equitable allocations of reasonable dues, fees, and other charges among participants.

(B) Self-Regulatory Organization's Statement on Burden on Competition

The proposed rule change will not impose any inappropriate burden on competition.

(C) Self-Regulatory Organization's Statement on Comments on the Proposed Rule Change Received from Members, Participants or Others

Written comments were neither solicited nor received with respect to the proposed rule change.

III. Date of Effectiveness of the Proposed Rule Changes and Timing for Commission Action

The foregoing rule change has become effective pursuant to Section 19(b)(3)(A)(ii) [3] of the Act and pursuant to Rule 19b–4(e)(2) [4] promulgated thereunder because the proposal establishes or changes a due, fee, or other charge. At any time within sixty days of the filing of such rule change, the Commission may summarily abrogate such change if it appears to the Commission that such action is necessary or appropriate in the public interest, for the protection of investors, or otherwise in furtherance of the purposes of the Act.

IV. Solicitation of Comments

Interested persons are invited to submit written data, views, and arguments concerning the foregoing. Persons making written submissions should file six copies thereof with the Secretary, Securities and Exchange Commission, 450 Fifth Street, NW, Washington, DC 20549. Copies of the submission, all subsequent amendments, all written statements with respect to the proposed rule change that are filed with the Commission, and all written communications relating to the proposed rule change between the Commission and any person, other than those that may be withheld from the public in accordance with the provisions of 5 U.S.C. 552, will be available for inspection and copying in the Commission's Public Reference Section, 450 Fifth Street, NW, Washington, DC 20549. Copies of such filings will also be available for inspection and copying at the principal office of Philadep. All submissions should refer to File Number SR–PHILADEP–96–06 and should be submitted by June 21, 1996.

For the Commission by the Division of Market Regulation, pursuant to delegated authority.[5]

Margaret H. McFarland,

Deputy Secretary.

[FR Doc. 96–13697 Filed 5–30–96; 8:45 am]

BILLING CODE 8010–01–M

[3] 15 U.S.C. 78s(b)(3)(A)(ii) (1988).

[4] 17 CFR 240.19b–4(e)(2) (1995).

[5] 17 CFR 200.30–3(a)(12) (1995).

[Release No. 34–37245; File No. SR–SCCP–96–03]

Self-Regulatory Organizations; Stock Clearing Corporation of Philadelphia; Notice of Filing of a Proposed Rule Change To Establish a Separate Participant Category for Inactive Accounts

May 24, 1996.

Pursuant to Section 19(b)(1) of the Securities Exchange Act of 1934 (''Act''),[1] notice is hereby given that on May 8, 1996, the Stock Clearing Corporation of Philadelphia (''SCCP'') filed with the Securities and Exchange Commission (''Commission'') the proposed rule change (File No. SR–SCCP–96–03) as described in Items I, II, and III below, which items have been prepared primarily by SCCP. The Commission is publishing this notice to solicit comments on the proposed rule change from interested persons.

I. Self-Regulatory Organization's Statement of the Terms of Substance of the Proposed Rule Change

The purpose of the proposed rule change is to amend SCCP's rules of establishment a separate participant category for inactive accounts and to amend the participants fund formulas with respect to such inactive accounts. Specifically, the proposed rule change will define the term ''Inactive Account'' and will set forth the mechanism for detecting a change in a participant's status from inactive to active for the immediate collection of the additional required participants fund contribution at such time.

II. Self-Regulatory Organization's Statement of the Purpose of, and Statutory Basis for, the Proposed Rule Change

In its filing with the Commission, SCCP included statements concerning the purpose of and basis for the proposed rule change and discussed any comments they received on the proposed rule changes. The text of these statements may be examined at the places specified in Item IV below. SCCP has prepared summaries, set forth in sections (A), (B), and (C) below, of the most significant aspects of such statements.

(A) Self-Regulatory Organization's Statement of the Purpose of, and Statutory Basis for, the Proposed Rule Change

SCCP proposes to amend its rules with respect to the minimum cash deposit contribution of its inactive participants to be set at the uniform rate of $5,000 instead of at the previously approved rate of $10,000.[2] ''Inactive Accounts'' are proposed to be defined as an account which conducts de minimis activity, currently established to be twenty or fewer trades per month.

SCCP proposes to adjust its Inactive Account contribution to the participants fund from $10,000 to $5,000. In proposing this amendment, SCCP recognizes that Inactive Accounts pose virtually no risk to the clearing corporation so long as they remain in such inactive status. In this regard, SCCP has established procedures to detect a change in a participant's status from inactive to active and for the immediate collection of the additional required participants fund contribution at such time.

SCCP will monitor its participants' account activities to assure that all participants post the requisite participants fund contributions. SCCP evaluates the nature and financial integrity of all participants of SCCP, even if they initially establish only Inactive Accounts. SCCP evaluates prospective participants develops a customer profile, assesses the firm's capital adequacy, determines the initial participants fund contribution, contacts the firm's Designated Examining Authority for a review of its regulatory history, and presents any and all pertinent information collected to SCCP's Admissions Committee. The Admissions Committee ultimately makes the determination about whether to admit the participant and directs management where appropriate to gather additional information so that the Committee can make such a determination. After admission, SCCP monitors participants' account activities to assure that the proper participants fund contribution is being collected from each participant.

Specifically with respect to Inactive Accounts, SCCP's Finance and Administration (''F&A'') Department

[1] 15 U.S.C. 78s(b)(1) (1988).

[2] Securities Exchange Act Release No. 36875 (February 22, 1996), 61 FR 7846 [SR–SCCP–95–06] (order granting partial temporary approval and partial permanent approval of a proposed rule change).

will identify for SCCP's Operations Department which specific accounts are currently inactive. Thereafter, the Operations Department will monitor on a daily basis purchase and sale blotters for each Inactive Account. Trade activity detected from Inactive Accounts will be compiled on a separate report identifying cumulative activity in each Inactive Account during a monthly billing cycle.[3]

In the event that an Inactive Account exceeds ten trades, but fewer than twenty-one trades, for a particular month, the Operations Department will immediately notify the F&A Department and SCCP's compliance officer. The F&A Department will verify this activity and will immediately call and send letters to the affected participants requiring the wiring of the additional participants fund contributions associated with an active account by the next business day in order for such participants to conduct further account activity during the month. If a participant has exceeded 20 trades for any given month, the participant must wire additional participants fund contributions associated with an active account by the next business day. A participant's failure to timely wire any additional participants fund contributions due subjects the participant to a $500 fine for the first offense and a $2,000 fine for the second offense during a calendar year. If the participant does not wire the additional participants fund contribution for SCCP by the next business day, SCCP will disallow any further business in the account beginning on the next business day after the additional contribution was due. Accordingly, an offense as contemplated by the foregoing fine schedule refers to the number of times that the account was inactivated from conducting any further business for failure to furnish SCCP with the additional contribution during the calendar year.

Once active, an account will be routinely subject to the normal review and update process on a monthly basis, and the F&A Department will recalculate each participant's participants fund deposit requirement at the end of each month based upon the participant's previous three months activity, prior to the most recent month.

SCCP believes the proposed rule change is consistent with Section 17A of the Act and the rules and regulations thereunder because the proposal should help to safeguard securities and funds in their custody or control or for which they are responsible and foster cooperation and coordination with persons engaged in the clearance and settlement of securities transactions.

(B) Self-Regulatory Organization's Statement on Burden on Competition

SCCP believes that the proposed rule change will not impose any burden on competition not contemplated within the parameters of the Act.

(C) Self-Regulatory Organization's Statement on Comments on the Proposed Rule Change Received From Members, Participants, or Others

No written comments relating to the proposed rule change have been received. SCCP will notify the Commission of any written comments received by SCCP.

III. Date of Effectiveness of the Proposed Rule Change and Timing for Commission Action

Within thirty-five days of the date of publication of this notice in the Federal Register or within such longer period (i) as the Commission may designate up to ninety days of such date if it finds such longer period to be appropriate and publishes its reasons for so finding or (ii) as to which SCCP consents, the Commission will:

(a) By order approve such proposed rule change or

(b) Institute proceedings to determine whether the proposed rule change should be disapproved.

IV. Solicitation of Comments

Interested persons are invited to submit written data, views, and arguments concerning the foregoing. Persons making written submissions should file six copies thereof with the Secretary, Securities and Exchange Commission, 450 Fifth Street, N.W., Washington, D.C. 20549. Copies of the submission, all subsequent amendments, all written statements with respect to the proposed rule change that are filed with the Commission, and all written communications relating to the proposed rule change between the Commission and any person, other than those that may be withheld from the public in accordance with the provisions of 5 U.S.C. 552, will be available for inspection and copying in the Commission's Public Reference Room, 450 Fifth Street, N.W., Washington, D.C. 20549. Copies of such filing will also be available for inspection and copying at the principal office of SCCP. All submissions should refer to the file number SR–SCCP–96–03 and should be submitted by June 21, 1996.

For the Commission by the Division of Market Regulation, pursuant to delegated authority.[4]

Margaret H. McFarland,

Deputy Secretary.

[FR Doc. 96–13695 Filed 5–30–96; 8:45 am]

BILLING CODE 8010–01–M

[3] This report will be distributed on a daily basis to SCCP management and SCCP's compliance officer.

[4] 17 CFR 200.30–3(a)(12) (1995).

SOCIAL SECURITY ADMINISTRATION

Agency Information Collection Activities: Proposed Collection Request

Normally on Fridays, the Social Security Administration publishes a list of information collection packages that will require submission to the Office of Management and Budget (OMB) for clearance in compliance with Pub. L. 104–13 effective October 1, 1995, The Paperwork Reduction Act of 1995. Since the last list was published in the Federal Register on May 17, 1996, the information collections listed below have been proposed or will require extension of the current OMB approvals:

(Call the SSA Reports Clearance Officer on (410) 965–4125 for a copy of the form(s) or package(s), or write to her at the address listed below the information collections.)

1. Statement of Income and Resources—0960–0124. The form SSA–8010 is used to obtain information about income and resources of individuals whose income may be ''deemed'' (considered available) to applicants/recipients of SSI. The information is used by the Social Security Administration to make initial or continuing eligibility determinations and to determine the amount of the SSI payment. The respondents are individuals whose income may be ''deemed'' to the SSI applicant/recipient.

Number of Respondents: 355,000.

Frequency of Response: 1.

Average Burden Per Response: 25 minutes.

Estimated Annual Burden: 147,917 hours.

2. Application for Supplemental Security Income—0960–0444. The information collected on the SSA–8001 is used by the Social Security Administration to determine whether applicants for SSI benefits meet all statutory and regulatory requirements for eligibility and, if so, the amount of benefits payable. The respondents are applicants for SSI benefits.

Number of Respondents: 1,781,849.
Frequency of Response: 1.
Average Burden Per Response: 15 minutes.
Estimated Annual Burden: 445,462.

3. Application for Widow's or Widower's Insurance Benefits—0960–0004. The information collected on form SSA–10 is used by the Social Security Administration to determine whether applicants for widow's/widower's benefits meet all the statutory and regulatory requirements for eligibility. The respondent's are surviving widow's and widower's age 60 or older, or age 50, if disabled.
Number of Respondents: 640,000.
Frequency of Response: 1.
Average Burden Per Response: 15 minutes.
Estimated Annual Burden: 160,000 hours.

4. Request for Waiver and Recovery Questionnaire—0960–0037. The form SSA–632 collects information on the circumstances surrounding overpayments of Social Security benefits to recipients. The information is used by the Social Security Administration to determine if recovery of the overpayment amount can be waived or must be repaid, and if so, how recovery will be made. The respondents are recipients who have been overpaid Social Security, Medicare, Black Lung or SSI benefits.
Number of Respondents: 500,000.
Frequency of Response: On occasion.
Average Burden Per Response: 25 minutes.
Estimated Annual Burden: 208,333 hours.

5. Application for Parent's Insurance Benefits—0960–0012. The information collected on form SSA–7 is used by the Social Security Administration to determine entitlement of an individual to parent's insurance benefits. The respondents are parents who were dependent on the worker for at least one-half of their support.
Number of Respondents: 1,400.
Frequency of Response: 1.
Average Burden Per Response: 15 minutes.
Estimated Annual Burden: 350 hours.

6. Permanent Residence in the U.S.—0960–451. The information collected by the Social Security Administration is used to determine if aliens meet the statutory and regulatory requirements for eligibility to SSI benefits. The respondents are aliens who are apply for and are recipients of SSI payments.
Number of Respondents: 271,800.
Frequency of Response: 1.
Average Burden Per Response: 5 minutes.
Estimated Annual Burden: 22,650 hours.

Written comments and recommendations regarding these information collections should be sent within 60 days from the date of this publication, directly to the SSA Reports Clearance Officer at the following address: Social Security Administration, DCFAM, Attn: Judith T. Hasche, 6401 Security Blvd., 1–A–21 Operations Bldg., Baltimore, MD 21235.

In addition to your comments on the accuracy of the agency's burden estimate, we are soliciting comments on the need for the information; its practical utility; ways to enhance its quality, utility and clarity; and on ways to minimize burden on respondents, including the use of automated collection techniques or other forms of information technology.

The information collections listed below, which were published in the Federal Register on March 29 and April 5, 1996, have been submitted to OMB.

1. Videoconference Evaluation Recontact Survey—0960–NEW. The purpose of the survey is to obtain public reaction to conducting business using videoconferencing technology. The information will be used by the Social Security Administration to determine the effectiveness of using videoconferencing for conducting claims and hearing interviews. The respondents are applicants for Social Security disability benefits and Supplemental Security Income disability benefits.
Number of Respondents: 400.
Frequency of Response: 1.
Average Burden Per Response: 15 minutes.
Estimated Annual Burden: 100 hours.

2. Application for a Social Security Card—0960–0066. The information collected on form SS–5 is used by the Social Security Administration to assign Social Security Numbers so that individuals may obtain employment, report earnings, open back accounts, pay taxes, apply for benefits, and for other purposes. The respondents are individuals who apply for Social Security Numbers.
Number of Respondents: 20,000,000.
Frequency of Response: 1.
Average Burden Per Response: 8 minutes.
Estimated Annual Burden: 2,666,667 hours.

3. Statement Regarding Date of Birth and Citizenship—0960–0016. The information collected on form SSA–702 is used by the Social Security Administration in conjunction with other evidence to establish a claimant's age or citizenship when better proofs are not available. The respondents are individuals who have knowledge of the birth and citizenship of an applicant.
Number of Respondents: 18,000.
Frequency of Response: 1.
Average Burden Per Response: 10 minutes.
Estimated Annual Burden: 3,000.

4. Application for Mother's or Father's Insurance Benefits—0960–0003. The information collected on form SSA–5 is used by the Social Security Administration to determine an applicant's eligibility to mother's or father's insurance benefits. The respondents are individuals who wish to file an application for such benefits.
Number of Respondents: 180,000.
Frequency of Response: 1.
Average Burden Per Response: 15 minutes.
Estimated Annual Burden: 45,000 hours.

5. Marriage Certification—0960–0009. The information collected on form SSA–3 is needed to provide evidence of an alleged marriage. Social Security uses the information to update records of marital status of an individual. The respondents are persons who apply for Social Security benefits and allege a current marriage.
Number of Respondents: 200,000.
Frequency of Response: 1.
Average Burden Per Response: 5 minutes.
Estimated Annual Burden: 16,667 hours.

6. Report on Individual with Childhood Impairment—0960–0084. The information collected on form SSA–1323 is used to determine the dates and results of psychometric testing and how the impairment affects the individual's progress in school. The respondents are public and private school officials and agencies which provide medical treatment to the applicant or claimant for benefits.
Number of Responses: 7,000.
Average Burden Per Response: 20 minutes.
Estimated Annual Burden: 2,333.

7. Report on Individual with Mental Impairment—0960–0058. The information collected on form SSA–824 is used to determine a claimant's physical and mental status prior to making a disability determination. The respondents are treating physicians, medical directors, medical record libraries, and other health professionals.
Number of Responses: 50,000.
Frequency of Response: 1.
Average Burden Per Response: 36 minutes.
Estimated Annual Burden: 30,000.

8. Claimant's Recent Medical Treatment—0960–0292. The information collected on form HA–4631

is used by the Social Security Administration to provide an updated medical history for a disability claimant who requests a hearing. The respondents are claimants for disability benefits who have requested a hearing and do not have updated medical evidence in file.

Number of Respondents: 211,006.

Frequency of Response: 1.

Average Burden Per Response: 10 minutes.

Estimated Annual Burden: 35,168.

9. Request for Review of Hearing Decision/Order—0960–0277. The information collected on form HA–520 is needed in order to afford claimants their statutory right under the Social Security Act to request review of a hearing decision. The data will be used to determine the course of action appropriate to resolve each issue. The respondents are claimants denied benefits or dissatisfied with a decision made regarding their claim.

Number of Respondents: 87,632.

Frequency of Response: 1.

Average Burden Per Response: 10 minutes.

Estimated Annual Burden: 14,605.

10. Claimant's Work Background—0960–0300. The information collected on form HA–4633 is used by the Social Security Administration in cases in which claimants for disability benefits have requested a hearing on the decision regarding their claim. A completed form provides an updated summary of a claimant's past relevant work and helps the Administrative Law Judge to better decide whether or not the claimant is disabled. The respondents are claimants who have requested a hearing and whose relevant work background is not in file.

Number of Respondents: 200,958.

Frequency of Response: 1.

Average Burden Per Response: 15 minutes.

Estimated Annual Burden: 50,240.

11. Medical Use Report, 20 CFR 416.268—0960–0552. The information required by this regulation is used by the Social Security Administration to determine if an individual is entitled to special Supplemental Security Income (SSI) payments. The respondents are SSI recipients whose payments were stopped based on earnings.

Number of Respondents: 25,000.

Frequency of Response: 1.

Average Burden Per Response: 3 minutes.

Estimated Annual Burden: 1,250 hours.

Written comments and recommendations regarding these information collections should be sent within 30 days of the date of this publication. Comments may be directed to OMB and SSA at the following addresses:

(OMB), Office of Management and Budget, OIRA, Attn: Laura Oliven, New Executive Office Building, Room 10230, Washington, D.C. 20503

(SSA), Social Security Administration, DCFAM, Attn: Judith T. Hasche, 6401 Security Blvd, 1–A–21 Operations Bldg., Baltimore, MD 21235

Dated: May 23, 1996.

Judith T. Hasche,

Reports Clearance Officer, Social Security Administration.

[FR Doc. 96–13595 Filed 5–30–96; 8:45 am]

BILLING CODE 4190–29–U

STATE DEPARTMENT

[Public Notice No. 2394]

Overseas Security Advisory Council; Notice of Closed Meeting

The Department of State announces a meeting of the U.S. State Department—Overseas Security Advisory Council on Friday, June 28, 1996, at the Sheraton Suites, Wilmington , Delaware. Pursuant to Section 10(d) of the Federal Advisory Committee Act and 5 U.S.C. 552b(c) (1) and (4), it has been determined the meeting will be closed to the public. Matters relative to classified national security information as well as privileged commercial information will be discussed. The agenda calls for the discussion of classified and corporate proprietary/security information as well as private sector physical and procedural security policies and protective programs at sensitive U.S. Government and private sector locations overseas.

For more information contact Marsha Thurman, Overseas Security Advisory Council, Department of State, Washington, D.C. 20522–1003, phone: 202–663–0869.

Dated: May 16, 1996.

Gregorie W. Bujac,

Director of the Diplomatic Security Service.

[FR Doc. 96–13621 Filed 5–30–96; 8:45 am]

BILLING CODE 4710–24–M

DEPARTMENT OF TRANSPORTATION

Surface Transportation Board [1]

[STB Finance Docket No. 32952]

Great Western Lines, LLC—Acquisition Exemption—Burlington Northern Railroad Company

Great Western Lines, LLC (GWL), a noncarrier, has filed a verified notice of exemption under 49 CFR 1150.31 to acquire approximately 23 miles of rail line owned by Burlington Northern Railroad Company (BN) as follows: (i) between milepost 76.5 at Fort Collins, CO, and milepost 98.9 at Greeley, CO; and (ii) BN's interchange track at Loveland, CO, between the end of that track and a point 10 feet south of Tenth Street in Loveland. GWL will also acquire 1 mile of incidental overhead trackage rights over the rail lines owned by BN as follows: (i) between milepost 76.5 at Fort Collins, CO, and BN's Rex Rail Yard at Fort Collins; and (ii) all tracks in BN's Rex Rail Yard.

The transaction was expected to be consummated on or after May 20, 1996.

This transaction is related to STB Finance Docket No. 32953, *Neptune Partners, Ltd.—Continuance in Control Exemption—Great Western Lines, LLC,* wherein Neptune Partners Ltd. has concurrently filed a verified notice to continue in control of GWL, upon its becoming a Class III rail carrier. In addition, Great Western Railway of Colorado, LLC (GWC) has concurrently filed a trackage rights exemption in STB Finance Docket No. 32954, *Great Western Railway of Colorado, LLC—Trackage Rights Exemption—Great Western Lines, LLC,* wherein GWC will be the operator of the rail lines being acquired by GWL and over which GWL will acquire incidental trackage rights in STB Finance Docket No. 32952.

If the verified notice contains false or misleading information, the exemption is void *ab initio.* Petitions to reopen the proceeding to revoke the exemption under 49 U.S.C. 10502(d) may be filed at any time. The filing of a petition to revoke will not automatically stay the transaction.

An original and 10 copies of all pleadings, referring to STB Finance Docket No. 32952, must be filed with the Surface Transportation Board, Office of the Secretary, Case Control Branch,

[1] The ICC Termination Act of 1995, Pub. L. No. 104–88, 109 Stat. 803, which was enacted on December 29, 1995, and took effect on January 1, 1996, abolished the Interstate Commerce Commission and transferred certain functions to the Surface Transportation Board (Board). This notice relates to functions that are subject to Board jurisdiction pursuant to 49 U.S.C. 10901.

1201 Constitution Avenue NW., Washington, DC 20423. In addition, a copy of each pleading must be served on Karl Morell, Ball, Janik & Novack, Suite 1035, 1101 Pennsylvania Avenue NW., Washington, DC 20004.

Decided: May 24, 1996.

By the Board, David M. Konschnik, Director, Office of Proceedings.

Vernon A. Williams,

Secretary.

[FR Doc. 96–13688 Filed 5–30–96; 8:45 am]

BILLING CODE 4915–00–P

[STB Finance Docket No. 32954]

Great Western Railway of Colorado, LLC—Trackage Rights Exemption—Great Western Lines, LLC

Great Western Lines, LLC (GWL), which will become a Class III carrier by virtue of its acquisition in a concurrently filed notice of exemption in *Great Western Lines, LLC—Acquisition Exemption—Burlington Northern Railroad Company*, STB Finance Docket No. 32952 (ICC served May 31, 1996), will agree to grant local and assign overhead trackage rights to Great Western Railway of Colorado, LLC (GWC), also a Class III rail carrier. GWL will grant GWC local trackage rights over GWL's rail lines as follows: (i) between milepost 76.5 at Fort Collins, CO, and milepost 98.9 at Greeley, CO; and (ii) GWL's interchange track at Loveland, CO. GWL will assign to GWC overhead trackage rights being acquired by GWL over Burlington Northern Railroad Company's (BN's) lines as follows: (i) Between milepost 76.5 at Fort Collins, CO, and BN's Rex Rail Yard at Fort Collins; and (ii) all tracks in BN's Rex Rail Yard.

The trackage rights agreement will become effective immediately upon the consummation of the transaction in STB Finance Docket No. 32952.

Under 49 U.S.C. 10502(g), the Board may not use its exemption authority to relieve a rail carrier of its statutory obligation to protect the interests of its employees. Section 11326(c), however, does not provide for labor protection for transactions under sections 11324 and 11325 that involve only Class III rail carriers. Because this transaction involves Class III rail carriers only, the Board, under the statute, may not impose labor protective conditions for this transaction.

This notice is filed under 49 CFR 1180.2(d)(7). If it contains false or misleading information, the exemption is void *ab initio*. Petitions to revoke the exemption under 49 U.S.C. 10502(d) may be filed at any time. The filing of a petition to revoke will not automatically stay the transaction.

An original and 10 copies of all pleadings, referring to STB Finance Docket No. 32954, must be filed with the Surface Transportation Board, Office of the Secretary, Case Control Branch, 1201 Constitution Avenue NW., Washington, DC 20423. In addition, a copy of each pleading must be served on Karl Morell, Ball, Janik & Novack, 1101 Pennsylvania Avenue NW., Washington, DC 20004.

Decided: May 24, 1996.

By the Board, David M. Konschnik, Director, Office of Proceedings.

Vernon A. Williams,

Secretary.

[FR Doc. 96–13686 Filed 5–30–96; 8:45 am]

BILLING CODE 4915–00–P

[STB Finance Docket No. 32953]

Neptune Partners, Ltd.—Continuance in Control Exemption—Great Western Lines, LLC

Neptune Partners, Ltd. (Neptune), a noncarrier, has filed a notice of exemption to continue in control of Great Western Lines, LLC (GWL), upon GWL's becoming a Class III rail carrier.

The transaction was expected to be consummated on or after May 20, 1996.

This transaction is related to STB Finance Docket No. 32952, *Great Western Lines, LLC—Acquisition Exemption—-Burlington Northern Railroad Company,* wherein GWL seeks to acquire certain rail lines from the Burlington Northern Railroad Company.

Neptune owns and controls one existing Class III common carrier by rail: Northern Ohio & Western Railway, LLC (NOWRR), operating in Ohio.

Neptune states that: (i) the railroads will not connect with each other; (ii) the continuance in control is not part of a series of anticipated transactions that would connect GWL with NOWRR; and (iii) the transaction does not involve a Class I carrier. Therefore, the transaction is exempt from the prior approval requirements of 49 U.S.C. 11323. *See* 49 CFR 1180.2(d)(2).

Under 49 U.S.C. 10502(g), the Board may not use its exemption authority to relieve a rail carrier of its statutory obligation to protect the interests of its employees. Section 11326(c), however, does not provide for labor protection for transactions under sections 11324 and 11325 that involve only Class III rail carriers. Because this transaction involves Class III rail carriers only, the Board, under the statute, may not impose labor protective conditions for this transaction.

If the notice contains false or misleading information, the exemption is void *ab initio.* Petitions to revoke the exemption under 49 U.S.C. 10502(d) may be filed at any time. The filing of a petition to revoke will not automatically stay the transaction.

An original and 10 copies of all pleadings, referring to STB Finance Docket No. 32953, must be filed with the Surface Transportation Board, Office of the Secretary, Case Control Branch, 1201 Constitution Avenue, N.W., Washington, DC 20423. In addition, a copy of each pleading must be served on Karl Morell, Ball, Janik & Novack, 1101 Pennsylvania Avenue, N.W., Suite 1035, Washington, DC 20004.

Decided: May 24, 1996.

By the Board, David M. Konschnik, Director, Office of Proceedings.

Vernon A. Williams,

Secretary.

[FR Doc. 96–13689 Filed 5–30–96; 8:45 am]

BILLING CODE 4915–00–P

[STB Finance Docket No. 32959]

Union Pacific Railroad Company—Trackage Rights Exemption—Chicago, Central and Pacific Railroad Company

Chicago, Central and Pacific Railroad Company (CCP) has agreed to grant overhead trackage rights to Union Pacific Railroad Company (UP). CCP will grant UP overhead trackage rights in a north-south direction from the point of switch of the connection at CCP milepost 455.8, near Arion, to the point of switch of the connection at CCP milepost 512.2, near Council Bluffs, IA, a total distance of approximately 56.4 miles. The trackage rights are located in

---

[1] The ICC Termination Act of 1995, Pub. L. No. 104–88, 109 Stat. 803, which was enacted on December 29, 1995, and took effect on January 1, 1996, abolished the Interstate Commerce Commission and transferred certain functions to the Surface Transportation Board (Board). This notice relates to functions that are subject to Board jurisdiction pursuant to 49 U.S.C. 11323–24.

[1] The ICC Termination Act of 1995, Pub. L. No. 104–88, 109 Stat. 803, which was enacted on December 29, 1995, and took effect on January 1, 1996, abolished the Interstate Commerce Commission and transferred certain functions to the Surface Transportation Board (Board). This notice relates to functions that are subject to Board jurisdiction pursuant to 49 U.S.C. 11323–24.

[1] The ICC Termination Act of 1995, Pub. L. No. 104–88, 109 Stat. 803, which was enacted on December 29, 1995, and took effect on January 1, 1996, abolished the Interstate Commerce Commission and transferred certain functions to the Surface Transportation Board (Board). This notice relates to functions that are subject to Board jurisdiction pursuant to 49 U.S.C. 11323–24.

Crawford, Harrison, and Pottawattamie Counties, IA.[2]

The transaction was scheduled to be consummated on, or as soon as possible after, the effective date of the exemption. Because the notice of exemption was filed on May 21, 1996, the transaction could be consummated no sooner than May 28, 1996.

The purposes of the trackage rights are: (1) to allow UP to operate over an alternate line while UP's parallel line is undergoing repair; and (2) to allow use of the trackage rights as required to alleviate congestion on UP's parallel track.

As a condition to this exemption, any employees affected by the trackage rights will be protected by the conditions imposed in *Norfolk and Western Ry. Co.—Trackage Rights—BN*, 354 I.C.C. 605 (1978), as modified in *Mendocino Coast Ry., Inc.—Lease and Operate*, 354 I.C.C. 732 (1978) and 360 I.C.C. 653 (1980).

This notice is filed under 49 CFR 1180.2(d)(7). If it contains false or misleading information, the exemption is void *ab initio.* Petitions to revoke the exemption under 49 U.S.C. 10502(d) may be filed at any time. The filing of a petition to revoke will not automatically stay the transaction.

An original and 10 copies of all pleadings, referring to STB Finance Docket No. 32959, must be filed with the Surface Transportation Board, Office of the Secretary, Case Control Branch, 1201 Constitution Avenue, N.W., Washington, DC 20423. In addition, a copy of each pleading must be served on Joseph D. Anthofer, General Attorney, 1416 Dodge Street, No. 830, Omaha, NE 68179.

Decided: May 28, 1996.

By the Board, David M. Konschnik, Director, Office of Proceedings.

Vernon A. Williams,

Secretary.

[FR Doc. 96–13687 Filed 5–30–96; 8:45 am]

BILLING CODE 4915–00–P

[2] On May 21, 1996, the Board concurrently received UP and CCP's request in STB Finance Docket No. 32959 (Sub-No. 1), *Petition for Partial Revocation of Class Exemption and for Temporary Exemption of Trackage Rights,* that the Board permit the trackage rights arrangement to extend only until August 1, 1996. That petition will be addressed by the Board in a separate decision.

DEPARTMENT OF THE TREASURY

Bureau of Alcohol, Tobacco and Firearms

Proposed Collection; Comment Request

ACTION: Notice and request for comments.

SUMMARY: The Department of the Treasury, as part of its continuing effort to reduce paperwork and respondent burden, invites the general public and other Federal agencies to take this opportunity to comment on proposed and/or continuing information collections, as required by the Paperwork Reduction Act of 1995, Public Law 104–13 (44 U.S.C. 3506(c)(2)(A)). Currently, the Bureau of Alcohol, Tobacco and Firearms within the Department of the Treasury is soliciting comments concerning the Application For Permit Under 26 U.S.C. Chapter 52 Manufacturer of Tobacco Products or Proprietor of Export Warehouse and Application For Amended Permit Under 26 U.S.C. 5712 Manufacturer of Tobacco Products or Proprietor of Export Warehouse.

DATES: Written comments should be received on or before July 30, 1996, to be assured of consideration.

ADDRESSES: Direct all written comments to Bureau of Alcohol, Tobacco and Firearms, Linda Barnes, 650 Massachusetts Avenue, NW., Washington, DC 20226, (202) 927–7768.

FOR FURTHER INFORMATION CONTACT: Requests for additional information or copies of the form(s) and instructions should be directed to Cliff Mullen, Wine, Beer & Spirits Regulations Branch, 650 Massachusetts Avenue, NW., Washington, DC 20226, (202) 927–8181.

SUPPLEMENTARY INFORMATION:

Title: Application for Permit Under 26 U.S.C. Chapter 52 Manufacturer of Tobacco Products or Proprietor of Export Warehouse and Application for Amended Permit Under 26 U.S.C. 5712 Manufacturer of Tobacco Products or Proprietor of Export Warehouse.

OMB Number: 1512–0398.

Form Number: ATF F 2093 (5200.3) amd ATF F 2098 (5200.16).

Abstract: These forms and any additional supporting documentation are used by tobacco industry members to obtain and amend permits necessary to engage in business as a manufacturer of tobacco products or proprietor of export warehouse.

Current Actions: There are no changes to this information collection and it is being submitted for extension purposes only.

Type of Review: Extension.

Affected Public: Business or other for-profit.

Estimated Number of Respondents: 328.

Estimated Time Per Respondent: 3.

Estimated Total Annual Burden Hours: 3.

Request for Comments: Comments submitted in response to this notice will be summarized and/or included in the request for OMB approval. All comments will become a matter of public record. Comments are invited on: (a) Whether the collection of information is necessary for the proper performance of the functions of the agency, including whether the information shall have practical utility; (b) the accuracy of the agency's estimate of the burden of the collection of information; (c) ways to enhance the quality, utility, and clarity of the information to be collected; and (d) ways to minimize the burden of the collection of information on respondents, including through the use of automated collection techniques or other forms of information technology. Also, ATF requests information regarding any monetary expenses you may incur while completing these forms.

Dated: May 23, 1996.

John W. Magaw,

Director.

[FR Doc. 96–13672 Filed 5–30–96; 8:45 am]

BILLING CODE 4810–31–P

Internal Revenue Service

Proposed Collection; Comment Request For Form 1040A

AGENCY: Internal Revenue Service (IRS), Treasury.

ACTION: Notice and request for comments.

SUMMARY: The Department of the Treasury, as part of its continuing effort to reduce paperwork and respondent burden, invites the general public and other Federal agencies to take this opportunity to comment on proposed and/or continuing information collections, as required by the Paperwork Reduction Act of 1995, Public Law 104–13 (44 U.S.C. 3506(c)(2)(A)). Currently, the IRS is soliciting comments concerning revisions to Form 1040A, U.S. Individual Income Tax Return.

DATES: Written comments should be received on or before July 30, 1996, to be assured of consideration.

ADDRESSES: Direct all written comments to Garrick R. Shear, Internal Revenue Service, room 5571, 1111 Constitution Avenue NW., Washington, DC 20224.

FOR FURTHER INFORMATION CONTACT: Requests for additional information or copies of the information collection should be directed to Martha R. Brinson, (202) 622–3869, Internal Revenue Service, room 5571, 1111 Constitution Avenue NW., Washington, DC 20224.

SUPPLEMENTARY INFORMATION:

Title: U.S. Individual Income Tax Return.

OMB Number: 1545–0085.

Form Number: 1040A.

Abstract: Form 1040A and its schedules are used by individuals to report their income subject to income tax and to compute their correct tax liability. The information is used to verify that the items reported on the form are correct and is also for statistics use.

Current Actions: Changes to Form 1040A—

1. Lines 31b, c, and d, requesting direct deposit information were added to page 2. This will increase the number of taxpayers electing direct deposit, and relieve taxpayers from the burden of having to attach Form 8888.

2. Line 18b, which had indicated that the taxpayer could be claimed as a dependent on someone else's return, was deleted to make room for the direct deposit information.

3. Line 23 was revised. In addition to making room for the direct deposit information, this change reduces taxpayer burden by removing checkboxes.

4. The checkbox from line 29a, indicating Form 1099 Federal income tax withheld was included on that line, was deleted to reduce taxpayer burden.

5. The exemption area on Form 1040A, page 1, was revised to reduce taxpayer burden. Columns 3 and 4 on line 6c, which were for the dependent's relationship, and the number of months lived in the taxpayer's home, were deleted. Line 6c, column 2, was revised to reflect section 742(c)(2)(B) of PL 103–465 which, for 1996, exempts taxpayers who have a dependent born after November 30, 1996 from the requirement to report the dependent's social security number. The entry spaces to the right of line 6c were revised and line 6d, which dealt with pre-1985 custody agreements, was deleted.

The instructions will be revised to reflect the changes made to Form 1040A.

Type of Review: Extension of a currently approved collection.

Affected Public: Individuals or households.

Estimated Number of Respondents: 27,530,816.

Estimated Time Per Respondent: Varies.

Estimated Total Annual Burden Hours: 231,970,033.

Request for Comments: Comments submitted in response to this notice will be summarized and/or included in the request for OMB approval. All comments will become a matter of public record. Comments are invited on: (a) Whether the collection of information is necessary for the proper performance of the functions of the agency, including whether the information shall have practical utility; (b) the accuracy of the agency's estimate of the burden of the collection of information; (c) ways to enhance the quality, utility, and clarity of the information to be collected; and (d) ways to minimize the burden of the collection of information on respondents, including through the use of automated collection techniques or other forms of information technology.

Approved: May 16, 1996.

Garrick R. Shear,

IRS Reports Clearance Officer.

[FR Doc. 96–13717 Filed 5–30–96; 8:45 am]

BILLING CODE 4830–01-U

UTAH RECLAMATION MITIGATION AND CONSERVATION COMMISSION

Final Environmental Assessment (EA) for Establishment of the Utah Lake Wetland Preserve and Finding of No Significant Impact; Notice of Availability

AGENCY: Utah Reclamation Mitigation and Conservation Commission.

ACTION: Notice of availability.

SUMMARY: The Final Environmental Assessment (EA) for Establishment of the Utah Lake Wetland Preserve (Preserve) and Finding of No Significant Impact (FONSI) are available. The EA was developed to determine the effects of acquiring private property interests, from willing sellers in the Goshen Bay and Benjamin Slough areas of Utah Lake, to establish the Preserve. The EA compared two alternatives, the preferred and a ''no action'' alternative. The Draft EA was developed with public input and the Final EA refined based upon public comment.

The most strongly voiced concern during public scoping involved potential drainage impacts to neighboring lands. EA analysis determined that the preferred action would not deliver any additional water to the Goshen Bay or Benjamin Slough areas, and that no substantial wetland developments were proposed which might impact hydrologic conditions over a broad area. Maintenance of existing cooperative drainage systems serving up-gradient lands would be allowed on acquired lands, subject to reasonable conditions and standard regulatory permitting. As a precaution, a site-specific hydrologic assessment will be conducted prior to certain restorative actions to guard against potential impacts from raised water tables on neighboring properties. This mitigation measure is highlighted in the FONSI.

DATES: The EA will be available on the publication of this notice.

ADDRESSES: Interested persons or organizations may request copies of the document by writing to Utah Lake Draft EA, Utah Reclamation Mitigation and Conservation Commission, 111 E. Broadway, Suite 310, Salt Lake City, Utah 84111.

FOR FURTHER INFORMATION CONTACT: Catherine Quinn, Telephone (801) 524–3146; Fax (801) 524–3148.

Authority: Pub. L. 102–575, 106 Stat. 4600, 4625, October 30, 1992.

Michael C. Weland,

Executive Director.

[FR Doc. 96–13622 Filed 5–30–96; 8:45 am]

BILLING CODE 4310–05–P

DEPARTMENT OF VETERANS AFFAIRS

Agency Information Collection Activities: Proposed Collection; Comment Request

AGENCY: Veterans Benefits Administration, Department of Veterans Affairs.

ACTION: Notice.

SUMMARY: As part of its continuing effort to reduce paperwork and respondent burden, the Veterans Benefits Administration (VBA) invites the general public and other Federal agencies to comment on this information collection. This request for comment is being made pursuant to the Paperwork Reduction Act of 1995 (Public Law 104–13; 44 U.S.C. 3506(c)(2)(A)). Comments should address the accuracy of the burden estimates and ways to minimize the burden including the use of automated collection techniques or the use of other forms of information technology, as well

as other relevant aspects of the information collection.

DATES: Written comments and recommendations on the proposal for the collection of information should be received by no later than July 30, 1996.

ADDRESSES: Direct all written comments to Nancy J. Kessinger, Veterans Benefits Administration (20M30), Department of Veterans Affairs, 810 Vermont Avenue, NW., Washington, DC 20420. All comments will become a matter of public record and will be summarized in the VBA request for Office of Management and Budget (OMB) approval. In this document the VBA is soliciting comments concerning the following information collection:

OMB Control Number: 2900–0162.

Title and Form Number: Monthly Certification of Flight Training, VA Form 22–6553c.

Type of Review: Extension of a currently approved collection.

Need and Uses: Public Law 101–237 reinstated the VA authority to pay educational assistance for the pursuit of flight training to veterans, servicemembers and selected reservists beginning on September 30, 1990, and ending on September 30, 1994, under chapter 30, title 38, U.S.C., and chapter 1606, title 10, U.S.C. Benefits are payable monthly based on the hours and type of flight instruction completed during the month, the type of aircraft used and dual training. Public Law 102–568 added solo flight training as approved training effective October 1, 1992. Benefits are not payable after a student terminates training. Public Law 102–16 authorized the VA to pay education benefits for vocational flight training to individuals eligible for chapter 32 and section 903. Public Law 102–446, the Veterans' Benefits Improvement Act of 1994, removed the September 30, 1994, ending date for flight training. Trainees eligible for benefits under chapters 30, 32, or 1606, or section 903 may receive benefits for enrolling in and pursuing approved vocational flight training. Benefits are limited to 60 percent of the approved cost of the courses. These provisions are effective October 1, 1994. VA Form 22–6553c serves as the report of flight training pursued and the termination of training.

Current Actions: The form is used by students (veterans, servicemembers and reservists) and flight schools to report the hours and costs of flight training received and the termination of training.

Affected Public: Individuals or households, Business or other for-profit, Not-for-profit institutions.

Estimated Annual Burden: 6,000 hours.

Estimated Average Burden Per Respondent: 30 minutes.

Frequency of Response: On occasion.

Estimated Number of Respondents: 2,000.

FOR FURTHER INFORMATION CONTACT: Requests for additional information or copies of the form should be directed to Department of Veterans Affairs, Attn: Jacquie McCray, Information Management Service (045A4), Department of Veterans Affairs, 810 Vermont Avenue, NW., Washington, DC 20420, Telephone (202) 273–8032 or FAX (202) 273–5981.

Dated: May 14, 1996.

By direction of the Secretary.

Donald L. Neilson,

Director, Information Management Service.

[FR Doc. 96–13598 Filed 5–30–96; 8:45 am]

BILLING CODE 8320–01–P

Agency Information Collection Activities: Proposed Collection; Comment Request

AGENCY: Veterans Benefits Administration, Department of Veterans Affairs.

ACTION: Notice.

SUMMARY: As part of its continuing effort to reduce paperwork and respondent burden, the Veterans Benefits Administration (VBA) invites the general public and other Federal agencies to comment on this information collection. This request for comment is being made pursuant to the Paperwork Reduction Act of 1995 (Public Law 104–13; 44 U.S.C. 3506(c)(2)(A)). Comments should address the accuracy of the burden estimates and ways to minimize the burden including the use of automated collection techniques or the use of other forms of information technology, as well as other relevant aspects of the information collection.

DATES: Written comments and recommendations on the proposal for the collection of information should be received by no later than July 30, 1996.

ADDRESSES: Direct all written comments to Nancy J. Kessinger, Veterans Benefits Administration (20M30), Department of Veterans Affairs, 810 Vermont Avenue, NW., Washington, DC 20420. All comments will become a matter of public record and will be summarized in the VBA request for Office of Management and Budget (OMB) approval. In this document the VBA is soliciting comments concerning the following information collection:

OMB Control Number: 2900–0383.

Title and Form Number: Application for Educational Assistance Test Program Benefits (Section 901, PL 96–342), VA Form 22–8889.

Type of Review: Extension of a currently approved collection.

Need and Uses: The form is used by individual under the Educational Assistance Test Program (EATP) to apply for educational benefits. The VBA uses the information to determine eligibility for EATP benefits.

Current Actions: VA is authorized to pay benefits under EATP. Subsistence benefits are payable monthly based on full-time or part-time training as certified by the school. Assistance benefits are payable once a term, quarter or semester for tuition, fees, books and other course related expenses. Benefits are not payable when training is interrupted, discontinued or completed. Without the information on VA Form 22–8889, the VBA would be unable to determine the applicant's basic eligibility for benefits.

Affected Public: Individuals or households.

Estimated Annual Burden: 125 hours.

Estimated Average Burden Per Respondent: 30 minutes.

Frequency of Response: On occasion.

Estimated Number of Respondents: 250.

FOR FURTHER INFORMATION CONTACT: Requests for additional information or copies of the form should be directed to Department of Veterans Affairs, Attn: Jacquie McCray, Information Management Service (045A4), 810 Vermont Avenue, NW., Washington, DC 20420, Telephone (202) 273–8032 or FAX (202) 273–5981.

Dated: May 17, 1996.

By direction of the Secretary.

William T. Morgan,

Management Analyst.

[FR Doc. 96–13599 Filed 5–30–96; 8:45 am]

BILLING CODE 8320–01–P

Agency Information Collection Activities: Proposed Collection; Comment Request

AGENCY: Veterans Benefits Administration, Department of Veterans Affairs.

ACTION: Notice.

SUMMARY: As part of its continuing effort to reduce paperwork and respondent burden, the Veterans Benefits Administration (VBA) invites the general public and other Federal agencies to comment on this information collection. This request for comment is being made pursuant to the

Paperwork Reduction Act of 1995 (Public Law 104–13; 44 U.S.C. 3506(c)(2)(A)). Comments should address the accuracy of the burden estimates and ways to minimize the burden including the use of automated collection techniques or the use of other forms of information technology, as well as other relevant aspects of the information collection.

DATES: Written comments and recommendations on the proposal for the collection of information should be received by no later than July 30, 1996.

ADDRESSES: Direct all written comments to Nancy J. Kessinger, Veterans Benefits Administration (20M30), Department of Veterans Affairs, 810 Vermont Avenue, NW., Washington, DC 20420. All comments will become a matter of public record and will be summarized in the VBA request for Office of Management and Budget (OMB) approval. In this document the VBA is soliciting comments concerning the following information collection:

OMB Control Number: 2900–0016.

Title and Form Number: Claim for Disability Insurance Benefits,VA Form 29–357.

Type of Review: Extension of a currently approved collection.

Need and Uses: The form is used by the policyholder to claim disability insurance benefits on National Service Life Insurance and United States Government Life Insurance policies.

Current Actions: The information collected on the form is used by the VBA personnel to establish the insured's eligibility for disability insurance benefits

Affected Public: Individuals or households.

Estimated Annual Burden: 14,175 hours.

Estimated Average Burden Per Respondent: 1 hour and 15 minutes.

Frequency of Response: On occasion.

Estimated Number of Respondents: 8,100.

FOR FURTHER INFORMATION CONTACT: Requests for additional information or copies of the form should be directed to Department of Veterans Affairs, Attn: Jacquie McCray, Information Management Service (045A4), Department of Veterans Affairs, 810 Vermont Avenue, NW, Washington, DC 20420, telephone (202) 273–8032 or FAX (202) 273–5981.

Dated: May 14, 1996.

By direction of the Secretary.

Donald L. Neilson,

Director, Information Management Service.

[FR Doc. 96–13600 Filed 5–30–96; 8:45 am]

BILLING CODE 8320–01–P

Agency Information Collection Activities: Proposed Collection; Comment Request

AGENCY: Veterans Benefits Administration, Department of Veterans Affairs.

ACTION: Notice.

SUMMARY: As part of its continuing effort to reduce paperwork and respondent burden, the Veterans Benefits Administration (VBA) invites the general public and other Federal agencies to comment on this information collection. This request for comment is being made pursuant to the Paperwork Reduction Act of 1995 (Public Law 104–13; 44 U.S.C. 3506(c)(2)(A)). Comments should address the accuracy of the burden estimates and ways to minimize the burden including the use of automated collection techniques or the use of other forms of information technology, as well as other relevant aspects of the information collection.

DATES: Written comments and recommendations on the proposal for the collection of information should be received by no later than July 30, 1996.

ADDRESSES: Direct all written comments to Nancy J. Kessinger, Veterans Benefits Administration (20M30), Department of Veterans Affairs, 810 Vermont Avenue, NW., Washington, DC 20420. All comments will become a matter of public record and will be summarized in the VBA request for Office of Management and Budget (OMB) approval. In this document the VBA is soliciting comments concerning the following information collection:

OMB Control Number: 2900–0099.

Title and Form Number: Request for Change of Program or Place of Training—Survivors' and Dependents' Educational Assistance, VA Form 22–5495.

Type of Review: Extension of a currently approved collection.

Need and Uses: This form is completed by a veteran's spouse, surviving spouse, or child to indicate a change in program and/or place of training. The VBA uses the information to determine if the student is eligible for dependents' educational assistance for the new program and/or place of training.

Current Actions: Spouses, surviving spouses, and children who are eligible for Dependents' Educational Assistance are permitted one change of their educational program provided the new program is suitable to their aptitudes, interests, and abilities. In addition, they may change their place of training upon application to the VBA.

Affected Public: Individuals or households.

Estimated Annual Burden: 4,850 hours.

Estimated Average Burden Per Respondent: 30 minutes per application.

Frequency of Response: On occasion.

Estimated Number of Respondents: 9,700.

FOR FURTHER INFORMATION CONTACT: Requests for additional information or copies of the form should be directed to Department of Veterans Affairs, Attn: Jacquie McCray, Information Management Service (045A4), Department of Veterans Affairs, 810 Vermont Avenue, NW., Washington, DC 20420, Telephone (202) 273–8032 or FAX (202) 273–5981.

Dated: May 14, 1996.

By direction of the Secretary.

Donald L. Neilson,

Director, Information Management Service.

[FR Doc. 96–13601 Filed 5–30–96; 8:45 am]

BILLING CODE 8320–01–P

Agency Information Collection Activities: Proposed Collection; Comment Request

AGENCY: Veterans Benefits Administration, Department of Veterans Affairs

ACTION: Notice.

SUMMARY: As part of its continuing effort to reduce paperwork and respondent burden, the Veterans Benefits Administration (VBA) invites the general public and other Federal agencies to comment on this information collection. This request for comment is being made pursuant to the Paperwork Reduction Act of 1995 (Public Law 104–13; 44 U.S.C. 3506(c)(2)(A)). Comments should address the accuracy of the burden estimates and ways to minimize the burden including the use of automated collection techniques or the use of other forms of information technology, as well as other relevant aspects of the information collection.

DATES: Written comments and recommendations on the proposal for the collection of information should be received by no later than July 30, 1996.

ADDRESSES: Direct all written comments to Nancy J. Kessinger, Veterans Benefits Administration (20M30), Department of Veterans Affairs, 810 Vermont Avenue, NW., Washington, DC 20420. All comments will become a matter of public record and will be summarized in the VBA request for Office of Management and Budget (OMB) approval. In this document the VBA is

soliciting comments concerning the following information collection:

OMB Control Number: 2900–0139.

Title and Form Number: Notice—Payment Not Applied, VA Form 29–4499a.

Type of Review: Extension of a currently approved collection.

Need and Uses: The form is used by veterans to reinstate their Government Life Insurance. The information collected is used by the VBA personnel to determine eligibility of the applicant for reinstatement of his/her life insurance.

Current Actions: The form is used by the policyholder to reinstate a Government Life Insurance policy.

Affected Public: Individuals or households.

Estimated Annual Burden: 300 hours.

Estimated Average Burden Per Respondent: 15 minutes.

Frequency of Response: On occasion.

Estimated Number of Respondents: 1,200.

FOR FURTHER INFORMATION CONTACT: Requests for additional information or copies of the form should be directed to Department of Veterans Affairs, Attn: Jacquie McCray, Information Management Service (045A4), Department of Veterans Affairs, 810 Vermont Avenue, NW., Washington, DC 20420, telephone (202) 273–8032 or FAX (202) 273–5981.

Dated: May 14, 1996.

By direction of the Secretary.

Donald L. Neilson,

Director, Information Management Service.

[FR Doc. 96–13602 Filed 5–30–96; 8:45 am]

BILLING CODE 8320–01–P

Agency Information Collection Activities: Proposed Collection; Comment Request

AGENCY: Veterans Benefits Administration, Department of Veterans Affairs.

ACTION: Notice.

SUMMARY: As part of its continuing effort to reduce paperwork and respondent burden, the Veterans Benefits Administration (VBA) invites the general public and other Federal agencies to comment on this information collection. This request for comment is being made pursuant to the Paperwork Reduction Act of 1995 (Public Law 104–13; 44 U.S.C. 3506(c)(2)(A)). Comments should address the accuracy of the burden estimates and ways to minimize the burden including the use of automated collection techniques or the use of other forms of information technology, as well as other relevant aspects of the information collection.

DATES: Written comments and recommendations on the proposal for the collection of information should be received by July 30, 1996.

ADDRESSES: Direct all written comments to Nancy J. Kessinger, Veterans Benefits Administration (20M30), Department of Veterans Affairs, 810 Vermont Avenue, NW, Washington, DC 20420. All comments will become a matter of public record and will be summarized in the VBA request for Office of Management and Budget (OMB) approval. In this document the VBA is soliciting comments concerning the following information collection:

OMB Control Number: 2900–0539.

Title and Form Number: Application for Supplemental Service Disabled Veterans (RH) Life Insurance, VA Forms 29–0188, 29–0189, and 29–0190.

Type of Review: Revision of a currently approved collection.

Need and Uses: These forms are used by veterans to apply for Supplemental Service-Disabled Veterans Insurance. The information is used by the VBA to determine eligibility for insurance.

Current Actions: No insurance may be granted unless a completed application has been received.

Affected Public: Individuals or households.

Estimated Annual Burden: 3,333 hours.

Estimated Average Burden Per Respondent: 20 minutes..

Frequency of Response: On occasion.

Estimated Number of Respondents: 10,000.

FOR FURTHER INFORMATION CONTACT: Requests for additional information or copies of the form should be directed to Department of Veterans Affairs, Attn: Jacquie McCray, Information Management Service (045A4), 810 Vermont Avenue, NW., Washington, DC 20420, telephone (202) 273–8032 or FAX (202) 273–5981.

Dated: May 17, 1996.

William T. Morgan,

Management Analyst.

[FR Doc. 96–13603 Filed 5–30–96; 8:45 am]

BILLING CODE 8320–01–P–M

federal register

Friday
May 31, 1996

Part II

Department of Health and Human Services

Health Care Financing Administration

42 CFR Part 412, et al.

Medicare Program; Changes to the Hospital Inpatient Prospective Payment Systems and Fiscal year 1997 Rates; Proposed Rule

DEPARTMENT OF HEALTH AND HUMAN SERVICES

Health Care Financing Administration

42 CFR Parts 412, 413, and 489

[BPD–847–P]

RIN 0938–AH34

Medicare Program; Changes to the Hospital Inpatient Prospective Payment Systems and Fiscal Year 1997 Rates

AGENCY: Health Care Financing Administration (HCFA), HHS.

ACTION: Proposed rule.

SUMMARY: We are proposing to revise the Medicare hospital inpatient prospective payment systems for operating costs and capital-related costs to implement necessary changes arising from our continuing experience with the systems. In addition, in the addendum to this proposed rule, we are describing proposed changes in the amounts and factors necessary to determine prospective payment rates for Medicare hospital inpatient services for operating costs and capital-related costs. These changes would be applicable to discharges occurring on or after October 1, 1996. We are also setting forth proposed rate-of-increase limits as well as proposing changes for hospitals and hospital units excluded from the prospective payment systems.

DATES: Comments will be considered if received at the appropriate address, as provided below, no later than 5 p.m. on July 31, 1996.

ADDRESSES: Mail written comments (an original and 3 copies) to the following address:

Health Care Financing Administration, Department of Health and Human Services, Attention: BPD–847–P, P.O. Box 7517, Baltimore, MD 21207–0517.

If you prefer, you may deliver your written comments (an original and 3 copies) to one of the following addresses:

Room 309–G, Hubert H. Humphrey Building, 200 Independence Avenue, SW., Washington, DC 20201, or

Room C5–09–26, Central Building, 7500 Security Boulevard, Baltimore, MD 21244–1850.

Because of staffing and resource limitations, we cannot accept comments by facsimile (FAX) transmission. In commenting, please refer to file code BPD–847–P. Comments received timely will be available for public inspection as they are received, generally beginning approximately 3 weeks after publication of a document, in Room 309–G of the Department's offices at 200 Independence Avenue, SW., Washington, DC, on Monday through Friday of each week from 8:30 a.m. to 5 p.m. (phone: (202) 690–7890).

For comments that relate to information collection requirements, mail a copy of comments to: Office of Information and Regulatory Affairs, Office of Management and Budget, Room 10235, New Executive Office Building, Washington, DC 20503, Attn: Allison Herron Eydt, HCFA Desk Officer.

Copies: To order copies of the Federal Register containing this document, send your request to: New Orders, Superintendent of Documents, P.O. Box 371954, Pittsburgh, PA 15250–7954. Specify the date of the issue requested and enclose a check or money order payable to the Superintendent of Documents, or enclose your Visa or Master Card number and expiration date. Credit card orders can also be placed by calling the order desk at (202) 512–1800 or by faxing to (202) 512–2250. The cost for each copy is $8.00. As an alternative, you can view and photocopy the Federal Register document at most libraries designated as Federal Depository Libraries and at many other public and academic libraries throughout the country that receive the Federal Register.

FOR FURTHER INFORMATION CONTACT:

Nancy Edwards (410) 786–4531, Operating Prospective Payment, DRG, Wage Index Issues.

Tzvi Hefter (410) 786–4529, Capital Prospective Payment, Excluded Hospitals.

SUPPLEMENTARY INFORMATION:

I. Background

A. Summary

Under section 1886(d) of the Social Security Act (the Act), a system of payment for the operating costs of acute care hospital inpatient stays under Medicare Part A (Hospital Insurance) based on prospectively-set rates was established effective with hospital cost reporting periods beginning on or after October 1, 1983. Under this system, Medicare payment for hospital inpatient operating costs is made at a predetermined, specific rate for each hospital discharge. All discharges are classified according to a list of diagnosis-related groups (DRGs). The regulations governing the hospital inpatient prospective payment system are located in 42 CFR part 412. On September 1, 1995, we published a final rule with comment period (60 FR 45778) to implement changes to the prospective payment system for hospital operating costs beginning with Federal fiscal year (FY) 1996.

For cost reporting periods beginning before October 1, 1991, hospital inpatient operating costs were the only costs covered under the prospective payment system. Payment for capital-related costs had been made on a reasonable cost basis because, under sections 1886(a)(4) and (d)(1)(A) of the Act, those costs had been specifically excluded from the definition of inpatient operating costs. However, section 4006(b) of the Omnibus Budget Reconciliation Act of 1987 (Public Law 100–203) revised section 1886(g)(1) of the Act to require that, for hospitals paid under the prospective payment system for operating costs, capital-related costs would also be paid under a prospective payment system effective with cost reporting periods beginning on or after October 1, 1991. As required by section 1886(g) of the Act, we replaced the reasonable cost-based payment methodology with a prospective payment methodology for hospital inpatient capital-related costs. Under the new methodology, effective for cost reporting periods beginning on or after October 1, 1991, a predetermined payment amount per discharge is made for Medicare inpatient capital-related costs. (See subpart M of 42 CFR part 412, and the August 30, 1991 final rule (56 FR 43358) for a complete discussion of the prospective payment system for hospital inpatient capital-related costs.)

B. Major Contents of This Proposed Rule

In this proposed rule, we are setting forth proposed changes to the Medicare hospital inpatient prospective payment systems for both operating costs and capital-related costs. This proposed rule would be effective for discharges occurring on or after October 1, 1996. Following is a summary of the major changes that we are proposing to make:

1. Changes to the DRG Classifications and Relative Weights

As required by section 1886(d)(4)(C) of the Act, we must adjust the DRG classifications and relative weights at least annually. Our proposed changes for FY 1997 are set forth in section II of this preamble.

2. Changes to the Hospital Wage Index

In section III of this preamble, we discuss revisions to the wage index and the annual update of the wage data. Specific issues addressed in this section include:

- FY 1997 wage index update.

• Revisions to the wage index based on hospital redesignations.

• Solicitation of public comment on possible changes to the following:

—Contract labor—expansion of allowable costs.

—Revision in Puerto Rico labor market areas.

• Medicare Geographic Classification Review Board—composition and criteria.

3. Rebasing and Revision of the Hospital Market Baskets

In section IV of this preamble, we discuss our proposal to use a rebased and revised hospital market basket in developing the FY 1997 update factor for the operating prospective payment rates, the capital prospective payment rates, and the excluded hospital rate-of-increase limits.

4. Other Changes to the Prospective Payment System for Inpatient Operating Costs

In section V of this preamble, we discuss several provisions of the regulations in 42 CFR parts 412, 413, and 489 and set forth certain proposed changes concerning the following:

• Sole community hospitals.

• Rural referral centers.

• Disproportionate share adjustment.

• Direct graduate medical education programs.

• Hospital distribution of ''An Important Message from Medicare.''

5. Changes and Clarifications to the Prospective Payment System for Capital-Related Costs

In section VI of this preamble, we discuss several provisions of the regulations in 42 CFR part 412 and set forth certain proposed changes concerning the following:

• Use of simplified cost accounting.

• The capital Federal and hospital-specific rates.

6. Changes for Hospitals and Hospital Units Excluded From the Prospective Payment Systems

In section VII of this preamble, we discuss a clarification concerning the calculation of payments to hospitals excluded from the prospective payment system.

7. Determining Prospective Payment Operating and Capital Rates and Rate-of-Increase Limits

In the addendum to this proposed rule, we set forth proposed changes to the amounts and factors for determining the FY 1997 prospective payment rates for operating costs and capital-related costs. We are also proposing update factors for determining the rate-of-increase limits for cost reporting periods beginning in FY 1997 for hospitals and hospital units excluded from the prospective payment system. In addition, we have included a detailed discussion of our methodology for setting thresholds for outlier cases. We are inviting comments on our methodology and any suggestions for changes in that methodology that could help us better predict outlier payments.

8. Impact Analysis

In Appendix A, we set forth an analysis of the impact that the proposed changes described in this rule would have on affected entities.

9. Capital Acquisition Model

Appendix B contains the technical appendix on the proposed FY 1997 capital acquisition model.

10. Rebased Market Basket Data Sources

Appendix C sets forth the data sources used to determine the market basket relative weights and choice of price proxies.

11. Report to Congress on the Update Factor for Prospective Payment Hospitals and Hospitals Excluded From the Prospective Payment System

Section 1886(e)(3)(B) of the Act requires that the Secretary report to Congress on our initial estimate of an update factor for FY 1997 for both hospitals included in and hospitals excluded from the prospective payment systems. This report is included as Appendix D to this proposed rule.

12. Proposed Recommendation of Update Factor for Hospital Inpatient Operating Costs

As required by sections 1886(e)(4) and (e)(5) of the Act, Appendix E provides our recommendation of the appropriate percentage change for FY 1997 for the following:

• Large urban area and other area average standardized amounts (and hospital-specific rates applicable to sole community hospitals) for hospital inpatient services paid for under the prospective payment system for operating costs.

• Target rate-of-increase limits to the allowable operating costs of hospital inpatient services furnished by hospitals and hospital units excluded from the prospective payment system.

13. Discussion of Prospective Payment Assessment Commission Recommendations

The Prospective Payment Assessment Commission (ProPAC) is directed by section 1886(e)(2)(A) of the Act to make recommendations on the appropriate percentage change factor to be used in updating the average standardized amounts. In addition, section 1886(e)(2)(B) of the Act directs ProPAC to make recommendations regarding changes in each of the Medicare payment policies under which payments to an institution are prospectively determined. In particular, the recommendations relating to the hospital inpatient prospective payment systems are to include recommendations concerning the number of DRGs used to classify patients, adjustments to the DRGs to reflect severity of illness, and changes in the methods under which hospitals are paid for capital-related costs. Under section 1886(e)(3)(A) of the Act, the recommendations required of ProPAC under sections 1886(e)(2)(A) and (B) of the Act are to be reported to Congress not later than March 1 of each year.

We are printing ProPAC's March 1, 1996 report, which includes its recommendations, as Appendix F of this document. The recommendations, and the actions we are proposing to take with regard to them (when an action is recommended), are discussed in detail in the appropriate sections of this preamble, the addendum, or the appendices to this proposed rule. See section VIII of this preamble for specific information concerning where individual recommendations are addressed. For a brief summary of the ProPAC recommendations, we refer the reader to the beginning of the ProPAC report as set forth in Appendix F of this proposed rule. For further information relating specifically to the ProPAC report, contact ProPAC at (202) 401–8986.

II. Proposed Changes to DRG Classifications and Relative Weights

A. Background

Under the prospective payment system, we pay for inpatient hospital services on the basis of a rate per discharge that varies by the DRG to which a beneficiary's stay is assigned. The formula used to calculate payment for a specific case takes an individual hospital's payment rate per case and multiplies it by the weight of the DRG to which the case is assigned. Each DRG weight represents the average resources required to care for cases in that particular DRG relative to the average resources used to treat cases in all DRGs.

Congress recognized that it would be necessary to recalculate the DRG relative weights periodically to account

for changes in resource consumption. Accordingly, section 1886(d)(4)(C) of the Act requires that the Secretary adjust the DRG classifications and relative weights annually. These adjustments are made to reflect changes in treatment patterns, technology, and any other factors that may change the relative use of hospital resources. The proposed changes to the DRG classification system and the proposed recalibration of the DRG weights for discharges occurring on or after October 1, 1996 are discussed below.

B. DRG Reclassification

1. General

Cases are classified into DRGs for payment under the prospective payment system based on the principal diagnosis, up to eight additional diagnoses, and up to six procedures performed during the stay, as well as age, sex, and discharge status of the patient. The diagnosis and procedure information is reported by the hospital using codes from the International Classification of Diseases, Ninth Edition, Clinical Modification (ICD–9–CM). The Medicare fiscal intermediary enters the information into its claims system and subjects it to a series of automated screens called the Medicare Code Editor (MCE). These screens are designed to identify cases that require further review before classification into a DRG can be accomplished.

After screening through the MCE and any further development of the claims, cases are classified by the GROUPER software program into the appropriate DRG. The GROUPER program was developed as a means of classifying each case into a DRG on the basis of the diagnosis and procedure codes and demographic information (that is, sex, age, and discharge status). It is used both to classify past cases in order to measure relative hospital resource consumption to establish the DRG weights and to classify current cases for purposes of determining payment. The records for all Medicare hospital inpatient discharges are maintained in the Medicare Provider Analysis and Review (MedPAR) file. The data in this file are used to evaluate possible DRG classification changes and to recalibrate the DRG weights.

Currently, cases are assigned to one of 492 DRGs in 25 major diagnostic categories (MDCs). Most MDCs are based on a particular organ system of the body (for example, MDC 6, Diseases and Disorders of the Digestive System); however, some MDCs are not constructed on this basis since they involve multiple organ systems (for example, MDC 22, Burns).

In general, principal diagnosis determines MDC assignment. However, there are five DRGs to which cases are assigned on the basis of procedure codes rather than first assigning them to an MDC based on the principal diagnosis. These are the DRGs for liver, bone marrow, and lung transplant (DRGs 480, 481, and 495, respectively) and the two DRGs for tracheostomies (DRGs 482 and 483). Cases are assigned to these DRGs before classification to an MDC.

Within most MDCs, cases are then divided into surgical DRGs (based on a surgical hierarchy that orders individual procedures or groups of procedures by resource intensity) and medical DRGs. Medical DRGs generally are differentiated on the basis of diagnosis and age. Some surgical and medical DRGs are further differentiated based on the presence or absence of complications or comorbidities (hereafter CC).

Generally, GROUPER does not consider other procedures; that is, nonsurgical procedures or minor surgical procedures generally not performed in an operating room are not listed as operating room (OR) procedures in the GROUPER decision tables. However, there are a few non-OR procedures that do affect DRG assignment for certain principal diagnoses, such as extracorporeal shock wave lithotripsy for patients with a principal diagnosis of urinary stones.

The changes we are proposing to make to the DRG classification system for FY 1997 and other decisions concerning DRGs are set forth below.

2. Pre-MDC DRGs

Effective October 1, 1994, ICD–9–CM procedure code 41.04, Autologous hematopoietic stem cell transplant, was created to capture the transplantation of stem cells obtained from bone marrow or peripheral blood. At that time, we designated the code as non-OR. This transplant procedure was previously assigned to procedure code 99.73, Therapeutic erythrocytapheresis, which is designated as a non-OR procedure. When we created this code, we received comments requesting that it be designated as an OR procedure and assigned to DRG 481 (Bone Marrow Transplant) based on the resource use associated with the type of transplant. However, as we stated in the September 1, 1994 final rule (59 FR 45340), when a new code is introduced, our longstanding practice is to assign it to the same DRG category as its predecessor code. One compelling reason for this practice is our inability to move the cases associated with a new code to a new DRG assignment as part of DRG reclassification and recalibration. Because we could not separately identify the stem cell transplant cases from the other cases coded with 99.73 in order to reclassify them and their charges to a new DRG, we were unable to predict the new weights of both the DRGs in which this code currently is classified and the new DRG to which it would be assigned. Therefore, we were prevented from redesignating code 41.04 as an OR procedure or assigning it to a DRG. However, we stated that we would analyze the stem cell cases as soon as the FY 1995 cases were available.

This year, the FY 1995 Medicare Provider Analysis and Review (MedPAR) file is available for use in DRG analysis and weight setting for FY 1997. In the December 1995 update to the FY 1995 MedPAR file, there are a total of 178 cases reporting the performance of a stem cell transplant. Of that number, 13 cases also reported the performance of a bone marrow transplant. Those cases were removed from our analysis because they are already classified to DRG 481. Of the remaining 165 cases, 100 cases did not meet the coverage criteria for Medicare payment. As set forth in the Medicare Coverage Issues Manual at section 35–30.1 (see Transmittal No. 84, April 1996), autologous stem cell transplants are not covered when performed for the following conditions:

- Acute leukemia not in remission (diagnosis codes 204.00, 205.00, 206.00, 207.00, and 208.00).
- Chronic granulocytic leukemia (diagnosis codes 205.10 and 205.11).
- Solid tumors (other than neuroblastomas) (diagnosis codes 140.0 through 199.1)
- Multiple myeloma (diagnosis codes 203.00, 203.01 and 238.6).

After eliminating the noncovered cases, 65 cases of stem cell transplant remained. The average standardized charge for these cases was approximately $83,000. The average standardized charge for bone marrow transplant cases in the FY 1995 MedPAR file is approximately $98,000. Thus, since the average resource use associated with stem cell transplant is similar to that associated with bone marrow transplant, we are proposing to assign procedure code 41.04 to DRG 481 effective with discharges occurring on or after October 1, 1996. The overall average charge for stem cell and bone marrow combined is just under $93,000. In addition, we propose to designate stem cell transplant as an OR procedure.

3. MDC 1 (Diseases and Disorders of the Nervous System)

a. Sleep Apnea

We have received correspondence requesting that we review the DRG assignment of cases in which surgery is performed to correct obstructive sleep apnea (diagnosis code 780.57). When coded as a principal diagnosis, sleep apnea is assigned to DRGs 34 and 35 (Other Disorders of the Nervous System)[1] in MDC 1.

Recently, new surgical interventions to correct sleep apnea have been introduced. The procedures most frequently performed for this condition are the following:

Code and Description	
27.69	Other plastic repair of palate
29.4	Plastic operation on pharynx
29.59	Other repair of pharynx

Since none of these surgical procedures is assigned to MDC 1, cases of sleep apnea treated with one of these surgeries are assigned to DRG 468 (Extensive OR Procedure Unrelated to Principal Diagnosis) in the case of codes 25.59 and 78.49 or to DRG 477 (Nonextensive OR Procedure Unrelated to Principal Diagnosis) in the case of code 29.4.

We are proposing to address this situation by assigning the three surgical procedures to MDC 1. Based on the charges associated with these cases and the fact that they are not clinically similar to the other surgical DRGs in MDC 1, we are proposing to include them in DRGs 7 and 8 (Peripheral and Cranial Nerve and Other Nervous System Procedures).

b. Guillain-Barré Syndrome

Guillain-Barré syndrome (diagnosis code 357.0) is a post-infectious polyneuropathy in which severely affected patients may require ventilatory assistance and long stays in intensive care. In recognition of the high resource consumption associated with this diagnosis, effective with FY 1991, we reassigned code 357.0 from DRGs 18 and 19 (Cranial and Peripheral Nerve Disorders) to DRG 20 (Nervous System Infection Except Viral Meningitis). (See the September 4, 1990 final rule (55 FR 36024).) A commenter stated that although DRG 20 would provide a higher payment for these cases, it would still be inadequate to cover the costs of treating these patients, and we agreed that we would monitor this issue.

We have recently received requests that we again review this assignment. These commenters stated that the treatment for these cases remains very costly and often entails long hospital stays. Therefore, we conducted an analysis of the cases assigned to DRG 20 using the 10 percent random sample of the FY 1995 MedPAR file that we use for analyzing possible classification changes.

Cases coded with 357.0 comprise approximately 20 percent of the cases assigned to DRG 20. As the commenters predicted, the average standardized charges for these cases, approximately $22,400, was higher than the average charge for the DRG, approximately $17,100. However, the length of stay was only slightly higher, 9.1 days compared to 8.4. We believe that DRG 20 is the appropriate assignment clinically for Guillain-Barré cases and the average charge is well within the variation in charges for this DRG. In addition, DRG 20 is the most resource-intensive, and, thus, the highest-weighted medical DRG in MDC 1.

However, in reviewing the other cases assigned to DRG 20, we noted that the average charges for two diagnoses were significantly lower than the overall average charge. These diagnoses, herpes zoster of the nervous system (code 053.10) and herpes zoster of the nervous system, NEC (code 053.19) had average charges of only $7,700 and $7,100, respectively. They also had significantly lower average lengths of stay (4.4 and 4.2 days, respectively). Because these two diagnoses also account for approximately 20 percent of the cases in DRG 20, their low average charge has the effect of significantly lowering the average charge for the DRG. Removing these two codes from DRG 20 increases the average charge to approximately $20,000. After reviewing the remaining medical DRGs in MDC 1, we believe that reassigning codes 053.10 and 053.19 to DRGs 18 and 19 is appropriate both clinically and in terms of resource consumption. In the 10 percent MedPAR file, these DRGs had an average charge of approximately $8,000 and $5,300, respectively. Therefore, we are proposing to make this DRG classification change effective for FY 1997. This change would significantly increase the relative weight for DRG 20 and provide higher payment for the Guillain-Barré cases. The proposed weight for DRG 20 is 2.4782, an increase of 17 percent over the FY 1996 weight of 2.1157.

4. MDC 5 (Diseases and Disorders of the Circulatory System)

Effective for discharges occurring on or after October 1, 1995, we created a new code for insertion of a coronary artery stent (procedure code 36.06). Until creation of the new code, insertion of coronary artery stent had been included in the codes for percutaneous transluminal coronary angioplasty (PTCA) (procedure codes 36.01, 36.02, and 36.05).

As discussed above in section II.B.2, when a new code is introduced, our longstanding practice is to assign it to the same DRG category as its predecessor code or codes. Therefore, in the June 2, 1995 proposed rule, we assigned procedure code 36.06 to DRG 112 (Percutaneous Cardiovascular Procedures), the DRG to which PTCA is assigned. In response to comments received, in the September 1, 1995 final rule, we explained our policy on DRG assignment of new codes (60 FR 45785). We also stated that the resource use and other data associated with procedure code 36.06 will be available in the FY 1996 Medicare cases which are used for analysis as part of FY 1998 DRG changes. We will evaluate the DRG assignment of coronary artery stent insertion at that time.

Since publication of the September 1, 1995 final rule, we have received data on stent cases provided by the manufacturer of one of the two stent devices currently approved by the Food and Drug Administration (FDA). In addition, the manufacturer has provided us with an analysis of the charges and length of stay of approximately 7,500 Medicare patients who received stents in FY 1995. Because there was no code for the procedure during that year, the manufacturer matched its list of stent recipients with the FY 1995 MedPAR file.

The manufacturer's analysis found that the FY 1995 average charge for PTCA cases without stent is approximately $15,700 and the average charge for cases with stent is approximately $21,000. However, our analysis of the data shows that there is wide variation in the hospital standardized charges reported for cases with implant of coronary artery stent. Individual hospital average charges for these cases range from about $9,000 to over $45,000.

This inconsistency in the data illustrates why our policy of not reassigning new codes until we have collected an entire year of coded Medicare data for analysis is prudent. The uncertainty associated with using incomplete data collected outside the

[1] A single title combined with two DRG numbers is used to signify pairs. Generally, the first DRG is for cases with CC and the second DRG is for cases without CC. If a third number is included, it represents cases of patients who are age 0–17. Occasionally, a pair of DRGs is split on age>17 and age 0–17.

Medicare program that cannot be verified remains a problem. Therefore, we are not proposing any DRG assignment change for implant of coronary artery stent. As noted above, a full year of coded FY 1996 Medicare data will be available in early 1997 for analysis. We will review the data at that time, and any proposed DRG changes will be announced in the FY 1998 proposed rule.

5. MDC 8 (Diseases and Disorders of the Musculoskeletal System and Connective Tissue)

In the September 1, 1995 final rule (60 FR 45790), we responded to a comment we received regarding the DRG assignment in MDC 8 of bipolar hip replacement cases. The commenter requested that cases of bipolar hip replacement be assigned to DRGs 210, 211, and 212 (Hip and Femur Procedures Except Major Joint) rather than to its current assignment, DRG 209 (Major Joint and Limb Reattachment Procedures of Lower Extremity). The commenter stated that the procedure for partial hip replacement (code 81.52) is very similar to the procedure for open reduction of fracture of the femur with internal fixation (code 79.35), which is assigned to DRGs 210, 211, and 212. Further, the commenter believes that partial hip replacement patients are more frail individuals than the population that elects total hip replacement surgery and need longer hospital stays to recover.

In the September 1, 1995 final rule, we stated that we would reexamine this assignment as part of our DRG agenda for FY 1997. Using the FY 1995 MedPAR file, we compared charges and lengths of stay for cases assigned to DRG 209 in which the procedures 81.51 (total hip replacement), 81.52, and 81.53 (revision of hip replacement) were performed with the charges for the entire DRG. The average standardized charges for these cases are very similar to each other as well as the other cases assigned to DRG 209. The average charge was $18,310 for partial hip replacement, $19,924 for total hip replacement, and $23,094 for revision of hip replacement. The $1,278 difference between the average charge for partial hip replacement cases in DRG 209 and the average charge of $19,588 for all cases in DRG 209 is within the normal range of charges for that DRG. However, the average charge for cases in DRG 210 was $15,119, or $2,157 less than the partial hip replacement charges.

A comparison of lengths of stay yields slightly different results. The partial hip replacement cases in DRG 209 had an average stay of 8.6 days. The overall average lengths of stay for DRGs 209 and 210 were 6.7 days and 8.5 days, respectively. Based on these data alone, it would seem that the commenter is correct that partial hip replacement patients are more similar to the patients in DRG 210, in terms of hospital length of stay. However, we also must consider these cases' higher average charges. The higher charges of the partial hip replacement cases indicate that they are more resource-intense than the cases in DRG 210. The proposed relative weights for DRG 209 and 210 are 2.2617 and 1.8458, respectively. Therefore, we believe that DRG 209 is the most appropriate assignment for procedure code 81.52 so that payment will most closely relate to the costs of care for these patients.

6. Surgical Hierarchies

Some inpatient stays entail multiple surgical procedures, each one of which, occurring by itself, could result in assignment of the case to a different DRG within the MDC to which the principal diagnosis is assigned. It is, therefore, necessary to have a decision rule by which these cases are assigned to a single DRG. The surgical hierarchy, an ordering of surgical classes from most to least resource intensive, performs that function. Its application ensures that cases involving multiple surgical procedures are assigned to the DRG associated with the most resource-intensive surgical class.

Because the relative resource intensity of surgical classes can shift as a function of DRG reclassification and recalibration, we reviewed the surgical hierarchy of each MDC, as we have for previous reclassifications, to determine if the ordering of classes coincided with the intensity of resource utilization, as measured by the same billing data used to compute the DRG relative weights.

A surgical class can be composed of one or more DRGs. For example, in MDC 5, the surgical class ''heart transplant'' consists of a single DRG (DRG 103) and the class ''coronary bypass'' consists of two DRGs (DRGs 106 and 107). Consequently, in many cases, the surgical hierarchy has an impact on more than one DRG. The methodology for determining the most resource-intensive surgical class, therefore, involves weighting each DRG for frequency to determine the average resources for each surgical class. For example, assume surgical class A includes DRGs 1 and 2 and surgical class B includes DRGs 3, 4, and 5, and that the average charge of DRG 1 is higher than that of DRG 3, but the average charges of DRGs 4 and 5 are higher than the average charge of DRG 2. To determine whether surgical class A should be higher or lower than surgical class B in the surgical hierarchy, we would weight the average charge of each DRG by frequency (that is, by the number of cases in the DRG) to determine average resource consumption for the surgical class. The surgical classes would then be ordered from the class with the highest average resource utilization to that with the lowest, with the exception of ''other OR procedures'' as discussed below.

This methodology may occasionally result in a case involving multiple procedures being assigned to the lower-weighted DRG (in the highest, most resource-intensive surgical class) of the available alternatives. However, given that the logic underlying the surgical hierarchy provides that the GROUPER searches for the procedure in the most resource-intensive surgical class, which may sometimes occur in cases involving multiple procedures, this result is unavoidable.

We note that, notwithstanding the foregoing discussion, there are a few instances when a surgical class with a lower average relative weight is ordered above a surgical class with a higher average relative weight. For example, the ''other OR procedures'' surgical class is uniformly ordered last in the surgical hierarchy of each MDC in which it occurs, regardless of the fact that the relative weight for the DRG or DRGs in that surgical class may be higher than that for other surgical classes in the MDC. The ''other OR procedures'' class is a group of procedures that are least likely to be related to the diagnoses in the MDC but are occasionally performed on patients with these diagnoses. Therefore, these procedures should only be considered if no other procedure more closely related to the diagnoses in the MDC has been performed.

A second example occurs when the difference between the average weights for two surgical classes is very small. We have found that small differences generally do not warrant reordering of the hierarchy since, by virtue of the hierarchy change, the relative weights are likely to shift such that the higher-ordered surgical class has a lower average weight than the class ordered below it.

Based on the preliminary recalibration of the DRGs, we are proposing to modify the surgical hierarchy as set forth below. As we stated in the September 1, 1989 final rule (54 FR 36457), we are unable to test the effects of the proposed revisions to the surgical hierarchy and to reflect these changes in the proposed relative

weights due to the unavailability of revised GROUPER software at the time this proposed rule is prepared. Rather, we simulate most major classification changes to approximate the placement of cases under the proposed reclassification and then determine the average charge for each DRG. These average charges then serve as our best estimate of relative resource use for each surgical class. We test the proposed surgical hierarchy changes after the revised GROUPER is received and reflect the final changes in the DRG relative weights in the final rule. Further, as discussed below in section II.C of this preamble, we anticipate that the final recalibrated weights will be somewhat different from those proposed, since they will be based on more complete data. Consequently, further revision of the hierarchy, using the above principles, may be necessary in the final rule.

At this time, we would revise the surgical hierarchy for the Pre-MDC DRGs, MDC 3 (Diseases and Disorders of the Ear, Nose, Mouth and Throat), and MDC 10 (Endocrine, Nutritional and Metabolic Diseases and Disorders) as follows:

- In the Pre-MDC DRGs, we would reorder Tracheostomy Except for Face, Mouth and Neck Diagnoses (DRG 483) above Liver Transplant (DRG 480).
- In MDC 3, we would reorder Cleft Lip and Palate Repair (DRG 52) and Sinus and Mastoid Procedures (DRGs 53 and 54) above Tonsillectomy and Adenoidectomy, Except Tonsillectomy and/or Adenoidectomy Only (DRGs 57 and 58).
- In MDC 10, we would reorder Adrenal and Pituitary Procedures (DRG 286) above Amputation of Lower Limb for Endocrine, Nutritional, and Metabolic Disorders (DRG 285).

7. Refinement of Complications and Comorbidities List

There is a standard list of diagnoses that are considered complications or comorbidities (CCs). We developed this list using physician panels to include those diagnoses that, when present as a secondary condition, would be considered a substantial complication or comorbidity.

In previous years, we have made changes to the standard list of CCs, either by adding new CCs or deleting CCs already on the list. At this time, we do not propose to delete any of the diagnosis codes on the CC list.

In the September 1, 1995 final rule (60 FR 45782), we added diagnosis code 008.49 (Bacterial enteritis) to the CC list. In response to a request from one commenter that we also add diagnosis code 008.45 (Clostridium difficile), we stated that we would review that request as part of our DRG analysis for FY 1997. We have reevaluated diagnosis code 008.45 as well as the remainder of the ''family'' of codes assigned to Intestinal infections due to other specified bacteria (008.41, 008.42, 008.43, 008.44, 008.46, and 008.47). Our analysis shows that all of these diagnoses, when present as a secondary condition, do lead to higher resource use. Therefore, we are proposing to add the following diagnosis codes to the CC list:

008.41 Intestinal infections due to staphylococcus
008.42 Intestinal infections due to pseudomonas
008.43 Intestinal infections due to campylobacter
008.44 Intestinal infections due to yersinia enterocolitica
008.45 Intestinal infections due to clostridium difficile
008.46 Intestinal infections due to other anaerobes
008.47 Intestinal infections due to other gram-negative bacteria

These diagnoses would be considered CCs for any principal diagnosis not shown in Table 6f, Additions to the CC Exclusions List (see discussion of CC Exclusions list in section V of the Addendum below).

This same commenter also requested that we add the following codes to the CC list:

331.0 Alzheimer's disease
423.9 Unspecified disease of the pericardium
348.5 Cerebral edema
333.4 Huntington's chorea
458.0 Orthostatic hypotension
458.9 Hypotension, not otherwise specified

Our analysis of these codes demonstrates that their presence as a secondary diagnosis does not significantly add to the resource use of the case. Therefore, we are not proposing to add them to the CC list.

Finally, the commenter suggested that the following diagnoses be added as cardiovascular complications for DRG 121 (Circulatory Disorders with AMI and Cardiovascular Complications, Discharged Alive):

434.xx Occlusion of cerebral arteries
436 Acute, but ill-defined, cerebrovascular disease

Using the 10 percent analysis file of the FY 1995 MedPAR data, we analyzed the cases assigned to DRG 121 that had these diagnoses coded as secondary conditions. The charges associated with those cases were indeed comparable to the other cases assigned to DRG 121. When we sought the advice of our medical specialists (physicians who work directly for or under contract with HCFA), however, they strongly opposed adding these codes to the list of conditions for DRG 121 based on the fact that these are not cardiovascular complications. Therefore, they are not clinically similar to other cases assigned to this DRG.

However, our analysis of this DRG did reveal a large variation in the charges and lengths of stay within this DRG. We believe that a close examination of the list of complicating conditions assigned to DRG 121 is needed. Therefore, we plan to perform a thorough analysis of the cases assigned to that DRG as part of our DRG analysis agenda for FY 1998. In the meantime, we are not proposing any change to DRG 121.

In the September 1, 1987 final notice concerning changes to the DRG classification system (52 FR 33143), we modified the GROUPER logic so that certain diagnoses included on the standard list of CCs would not be considered a valid CC in combination with a particular principal diagnosis. Thus, we created the CC Exclusions List. We made these changes to preclude coding of CCs for closely related conditions, to preclude duplicative coding or inconsistent coding from being treated as CCs, and to ensure that cases are appropriately classified between the complicated and uncomplicated DRGs in a pair.

In the May 19, 1987 proposed notice concerning changes to the DRG classification system (52 FR 18877), we explained that the excluded secondary diagnoses were established using the following five principles:

- Chronic and acute manifestations of the same condition should not be considered CCs for one another (as subsequently corrected in the September 1, 1987 final notice (52 FR 33154)).
- Specific and nonspecific (that is, not otherwise specified (NOS)) diagnosis codes for a condition should not be considered CCs for one another.
- Conditions that may not co-exist, such as partial/total, unilateral/bilateral, obstructed/unobstructed, and benign/malignant, should not be considered CCs for one another.
- The same condition in anatomically proximal sites should not be considered CCs for one another.
- Closely related conditions should not be considered CCs for one another.

The creation of the CC Exclusions List was a major project involving hundreds of codes. The FY 1988 revisions were intended to be only a first step toward refinement of the CC list in that the

criteria used for eliminating certain diagnoses from consideration as CCs were intended to identify only the most obvious diagnoses that should not be considered complications or comorbidities of another diagnosis. For that reason, and in light of comments and questions on the CC list, we have continued to review the remaining CCs to identify additional exclusions and to remove diagnoses from the master list that have been shown not to meet the definition of a CC. (See the September 30, 1988 final rule for the revision made for the discharges occurring in FY 1989 (53 FR 38485); the September 1, 1989 final rule for the FY 1990 revision (54 FR 36552); the September 4, 1990 final rule for the FY 1991 revision (55 FR 36126); the August 30, 1991 final rule for the FY 1992 revision (56 FR 43209); the September 1, 1992 final rule for the FY 1993 revision (57 FR 39753); the September 1, 1993 final rule for the FY 1994 revisions (58 FR 46278); the September 1, 1994 final rule for the FY 1995 revisions (59 FR 45334); and the September 1, 1995 rule for the FY 1996 revisions (60 FR 45782).)

We are proposing a limited revision of the CC Exclusions List to take into account the changes that will be made in the ICD–9–CM diagnosis coding system effective October 1, 1996, as well as the proposed CC changes described above. (See section II.B.8, below, for a discussion of ICD–9–CM changes.) These proposed changes are being made in accordance with the principles established when we created the CC Exclusions List in 1987.

The changes discussed above have been added to Table 6g, Additions to the CC Exclusions List, in section V of the Addendum to this proposed rule.

Tables 6g and 6h in section V of the Addendum to this proposed rule contain the proposed revisions to the CC Exclusions List that would be effective for discharges occurring on or after October 1, 1996. Each table shows the principal diagnoses with proposed changes to the excluded CCs. Each of these principal diagnoses is shown with an asterisk and the additions or deletions to the CC Exclusions List are provided in an indented column immediately following the affected principal diagnosis.

CCs that are added to the list are in Table 6g—Additions to the CC Exclusions List. Beginning with discharges on or after October 1, 1996, the indented diagnoses will not be recognized by the GROUPER as valid CCs for the asterisked principal diagnosis.

CCs that are deleted from the list are in Table 6h—Deletions from the CC Exclusions List. Beginning with discharges on or after October 1, 1996, the indented diagnoses will be recognized by the GROUPER as valid CCs for the asterisked principal diagnosis.

Copies of the original CC Exclusions List applicable to FY 1988 can be obtained from the National Technical Information Service (NTIS) of the Department of Commerce. It is available in hard copy for $92.00 plus $6.00 shipping and handling and on microfiche for $20.50, plus $4.00 for shipping and handling. A request for the FY 1988 CC Exclusions List (which should include the identification accession number, (PB) 88–133970) should be made to the following address: National Technical Information Service; United States Department of Commerce; 5285 Port Royal Road; Springfield, Virginia 22161; or by calling (703) 487–4650.

Users should be aware of the fact that all revisions to the CC Exclusions List (FYs 1989, 1990, 1991, 1992, 1993, 1994, 1995, and 1996) and those in Tables 6g and 6h of this document must be incorporated into the list purchased from NTIS in order to obtain the CC Exclusions List applicable for discharges occurring on or after October 1, 1996.

Alternatively, the complete documentation of the GROUPER logic, including the current CC Exclusions List, is available from 3M/Health Information Systems (HIS), which, under contract with HCFA, is responsible for updating and maintaining the GROUPER program. The current DRG Definitions Manual, Version 13.0, is available for $195.00, which includes $15.00 for shipping and handling. Version 14.0 of this manual, which will include the final FY 1997 DRG changes, will be available in October 1996 for $195.00. These manuals may be obtained by writing 3M/HIS at the following address: 100 Barnes Road; Wallingford, Connecticut 06492; or by calling (203) 949–0303. Please specify the revision or revisions requested.

8. Review of Procedure Codes in DRGs 468, 476, and 477 Each Year, We Review Cases Assigned to DRG 468

(Extensive OR Procedure Unrelated to Principal Diagnosis), DRG 476 (Prostatic OR Procedure Unrelated to Principal Diagnosis), and DRG 477 (Nonextensive OR Procedure Unrelated to Principal Diagnosis) in order to determine whether it would be appropriate to change the procedures assigned among these DRGs.

DRGs 468, 476, and 477 are reserved for those cases in which none of the OR procedures performed is related to the principal diagnosis. These DRGs are intended to capture atypical cases, that is, those cases not occurring with sufficient frequency to represent a distinct, recognizable clinical group. DRG 476 is assigned to those discharges in which one or more of the following prostatic procedures are performed and are unrelated to the principal diagnosis:

60.0 Incision of prostate
60.12 Open biopsy of prostate
60.15 Biopsy of periprostatic tissue
60.18 Other diagnostic procedures on prostate and periprostatic tissue
60.21 Transurethral prostatectomy
60.29 Other transurethral prostatectomy
60.61 Local excision of lesion of prostate
60.69 Prostatectomy NEC
60.81 Incision of periprostatic tissue
60.82 Excision of periprostatic tissue
60.93 Repair of prostate
60.94 Control of (postoperative) hemorrhage of prostate
60.95 Transurethral balloon dilation of the prostatic urethra
60.99 Other operations on prostate

All remaining OR procedures are assigned to DRGs 468 and 477, with DRG 477 assigned to those discharges in which the only procedures performed are nonextensive procedures that are unrelated to the principal diagnosis. The original list of the ICD–9–CM procedure codes for the procedures we consider nonextensive procedures if performed with an unrelated principal diagnosis was published in Table 6C in section IV of the Addendum to the September 30, 1988 final rule (53 FR 38591). As part of the final rules published on September 4, 1990, August 30, 1991, September 1, 1992, September 1, 1993, September 1, 1994, and September 1, 1995, we moved several other procedures from DRG 468 to 477. (See 55 FR 36135, 56 FR 43212, 57 FR 23625, 58 FR 46279, 59 FR 45336, and 60 FR 45783, respectively.)

a. Adding Procedure Codes to MDCs

We annually conduct a review of procedures producing DRG 468 or 477 assignments on the basis of volume of cases in these DRGs with each procedure. Our medical consultants then identify those procedures occurring in conjunction with certain principal diagnoses with sufficient frequency to justify adding them to one of the surgical DRGs for the MDC in which the diagnosis falls. This year's review did not identify any necessary changes; therefore, we are not proposing

to move any procedures from DRG 468 or DRG 477 to one of the surgical DRGs.

b. Reassignment of Procedures Among DRGs 468, 476, and 477

We also reviewed the list of procedures that produce assignments to DRGs 468, 476, and 477 to ascertain if any of those procedures should be moved from one of these DRGs to another based on average charges and length of stay. Generally, we move only those procedures for which we have an adequate number of discharges to analyze the data. Based on our review this year, we are proposing to move one procedure from DRG 468 to DRG 477.

In reviewing the list of OR procedures that produce DRG 468 assignments, we analyzed the average charge and length of stay data for cases assigned to that DRG to identify those procedures that are more similar to the discharges that currently group to either DRG 476 or 477. We identified one procedure—Closed endoscopic biopsy of lung (code 33.27), a needle biopsy—that is significantly less resource intensive than the other procedures assigned to DRG 468. Therefore, we are proposing to move procedure code 33.27 to the list of procedures that result in assignment to DRG 477.

In reviewing the list of procedures assigned to DRG 477, we did not identify any procedures that should be assigned to either DRG 468 or 476. We did, however, identify the following procedures that we believe should be reassigned from an OR to a non-OR designation:

08.81 Linear repair of laceration of eyelid or eyebrow
08.82 Repair of laceration involving lid margin, partial-thickness
08.83 Other repair of laceration of eyelid, partial thickness
08.84 Repair of laceration involving lid margin, full-thickness
08.85 Other repair of laceration of eyelid, full-thickness
08.86 Lower eyelid rhytidectomy
08.87 Upper eyelid rhytidectomy
08.89 Other eyelid repair

Our analysis of the data associated with these eyelid repair procedures leads us to conclude that the procedures are performed following accidental injury or falls, incurred while the patient is in the hospital. These procedures, which are normally performed at bedside and do not necessitate a trip to the operating room, are significantly less resource intensive than other procedures designated as OR procedures. Therefore, we are proposing to change the procedures from OR to non-OR procedures. We note that these procedures are assigned to surgical DRGs in MDCs 2, 9, 21, 22, and 24. With this proposed change, cases in which procedure codes 08.81 through 08.89 are the only OR procedure codes listed would no longer be assigned to a surgical DRG.

All of these proposed changes would be effective with discharges occurring on or after October 1, 1996.

9. Changes to the ICD–9–CM Coding System

As discussed above in section II.B.1 of this preamble, the ICD–9–CM is a coding system that is used for the reporting of diagnoses and procedures performed on a patient. In September 1985, the ICD–9–CM Coordination and Maintenance Committee was formed. This is a Federal interdepartmental committee charged with the mission of maintaining and updating the ICD–9–CM. That mission includes approving coding changes, and developing errata, addenda, and other modifications to the ICD–9–CM to reflect newly developed procedures and technologies and newly identified diseases. The Committee is also responsible for promoting the use of Federal and non-Federal educational programs and other communication techniques with a view toward standardizing coding applications and upgrading the quality of the classification system.

The Committee is co-chaired by the National Center for Health Statistics (NCHS) and HCFA. The NCHS has lead responsibility for the ICD–9–CM diagnosis codes included in *Volume 1—Diseases: Tabular List* and *Volume 2—Diseases: Alphabetic Index,* while HCFA has lead responsibility for the ICD–9–CM procedure codes included in *Volume 3—Procedures: Tabular List and Alphabetic Index.*

The Committee encourages participation in the above process by health-related organizations. In this regard, the Committee holds public meetings for discussion of educational issues and proposed coding changes. These meetings provide an opportunity for representatives of recognized organizations in the coding fields, such as the American Health Information Management Association (AHIMA) (formerly American Medical Record Association (AMRA)), the American Hospital Association (AHA), and various physician specialty groups as well as physicians, medical record administrators, health information management professionals, and other members of the public to contribute ideas on coding matters. After considering the opinions expressed at the public meetings and in writing, the Committee formulates recommendations, which then must be approved by the agencies.

The Committee presented proposals for coding changes at public meetings held on May 5 and November 30, 1995, and finalized the coding changes after consideration of comments received at the meetings and in writing within 30 days following the November 1995 meeting. The initial meeting for consideration of coding issues for implementation in FY 1998 will be held on June 6, 1996. Copies of the minutes of these meetings may be obtained by writing to one of the co-chairpersons representing NCHS and HCFA. We encourage commenters to address suggestions on coding issues involving diagnosis codes to: Donna Pickett, Co-Chairperson; ICD–9–CM Coordination and Maintenance Committee; NCHS; Room 1100; 6525 Belcrest Road; Hyattsville, Maryland 20782. Comments may be sent by E-mail to: alb8@nch09a.em.cdc.gov.

Questions and comments concerning the procedure codes should be addressed to: Patricia E. Brooks, Co-Chairperson; ICD–9–CM Coordination and Maintenance Committee; HCFA, Office of Hospital Policy; Division of Prospective Payment System; C5–06–27; 7500 Security Boulevard; Baltimore, Maryland 21244–1850. Comments may be sent by E-mail to: pbrooks@hcfa.gov.

The ICD–9–CM code changes that have been approved will become effective October 1, 1996. The new ICD–9–CM codes are listed, along with their proposed DRG classifications, in Tables 6a and 6b (New Diagnosis Codes and New Procedure Codes, respectively) in section V of the Addendum to this proposed rule. As we stated above, the code numbers and their titles were presented for public comment in the ICD–9–CM Coordination and Maintenance Committee meetings. Both oral and written comments were considered before the codes were approved. Therefore, we are soliciting comments only on the proposed DRG classification.

Further, the Committee has approved the expansion of certain ICD–9–CM codes to require an additional digit for valid code assignment. Diagnosis codes that have been replaced by expanded codes, other codes, or have been deleted are in Table 6c (Invalid Diagnosis Codes). The procedure codes that have been replaced by expanded codes or have been deleted are in Table 6d (Invalid Procedure Codes). These invalid diagnosis and procedure codes will not be recognized by the GROUPER beginning with discharges occurring on or after October 1, 1996. The

corresponding new or expanded codes are included in Tables 6a and 6b. Revisions to diagnosis and procedure code titles are in Tables 6e (Revised Diagnosis Code Titles) and 6f (Revised Procedure Code Titles), which also include the proposed DRG assignments for these revised codes.

C. Recalibration of DRG Weights

We are proposing to use the same basic methodology for the FY 1997 recalibration as we did for FY 1996. (See the September 1, 1995 final rule (60 FR 45791).) That is, we would recalibrate the weights based on charge data for Medicare discharges. However, we would use the most current charge information available, the FY 1995 MedPAR file, rather than the FY 1994 MedPAR file. The MedPAR file is based on fully-coded diagnostic and surgical procedure data for all Medicare inpatient hospital bills.

The proposed recalibrated DRG relative weights are constructed from FY 1995 MedPAR data, based on bills received by HCFA through December 1995, from all hospitals subject to the prospective payment system and short-term acute care hospitals in waiver States. The FY 1995 MedPAR file includes data for approximately 10.6 million Medicare discharges.

The methodology used to calculate the proposed DRG relative weights from the FY 1995 MedPAR file is as follows:

- To the extent possible, all the claims were regrouped using the proposed DRG classification revisions discussed above in section II.B of this preamble. As noted in section II.B.6, due to the unavailability of revised GROUPER software, we simulate most major classification changes to approximate the placement of cases under the proposed reclassification. However, there are some changes that cannot be modeled.
- Charges were standardized to remove the effects of differences in area wage levels, indirect medical education costs, disproportionate share payments, and, for hospitals in Alaska and Hawaii, the applicable cost-of-living adjustment.
- The average standardized charge per DRG was calculated by summing the standardized charges for all cases in the DRG and dividing that amount by the number of cases classified in the DRG.
- We then eliminated statistical outliers, using the same criteria as was used in computing the current weights. That is, all cases that are outside of 3.0 standard deviations from the mean of the log distribution of both the charges per case and the charges per day for each DRG.
- The average charge for each DRG was then recomputed (excluding the statistical outliers) and divided by the national average standardized charge per case to determine the relative weight. A transfer case is counted as a fraction of a case based on the ratio of its length of stay to the geometric mean length of stay of the cases assigned to the DRG. That is, a 5-day length of stay transfer case assigned to a DRG with a geometric mean length of stay of 10 days is counted as 0.5 of a total case.
- We established the relative weight for heart and heart-lung, liver, and lung transplants (DRGs 103, 480, and 495) in a manner consistent with the methodology for all other DRGs except that the transplant cases that were used to establish the weights were limited to those Medicare-approved heart, heart-lung, liver, and lung transplant centers that have cases in the FY 1995 MedPAR file. (Medicare coverage for heart, heart-lung, liver, and lung transplants is limited to those facilities that have received approval from HCFA as transplant centers.)
- Acquisition costs for kidney, heart, heart-lung, liver, and lung transplants continue to be paid on a reasonable cost basis. Unlike other excluded costs, the acquisition costs are concentrated in specific DRGs (DRG 302 (Kidney Transplant); DRG 103 (Heart Transplant for heart and heart-lung transplants); DRG 480 (Liver Transplant); and DRG 495 (Lung Transplant)). Because these costs are paid separately from the prospective payment rate, it is necessary to make an adjustment to prevent the relative weights for these DRGs from including the effect of the acquisition costs. Therefore, we subtracted the acquisition charges from the total charges on each transplant bill that showed acquisition charges before computing the average charge for the DRG and before eliminating statistical outliers.

When we recalibrated the DRG weights for previous years, we set a threshold of 10 cases as the minimum number of cases required to compute a reasonable weight. We propose to use that same case threshold in recalibrating the DRG weights for FY 1997. Using the FY 1995 MedPAR data set, there are 37 DRGs that contain fewer than 10 cases. We computed the weights for the 37 low-volume DRGs by adjusting the FY 1996 weights of these DRGs by the percentage change in the average weight of the cases in the other DRGs. We note that the FY 1996 weights for the low-volume DRGs were recalculated based on non-Medicare data we acquired from 19 States. This was the first update of the weights since they were initially calculated for FY 1984 based on data from Maryland and Michigan. For a complete description of this process, see the September 1, 1995 final rule (60 FR 45781).

The weights developed according to the methodology described above, using the proposed DRG classification changes, result in an average case weight that is different from the average case weight before recalibration. Therefore, the new weights are normalized by an adjustment factor, so that the average case weight after recalibration is equal to the average case weight before recalibration. This adjustment is intended to ensure that recalibration by itself neither increases nor decreases total payments under the prospective payment system.

Section 1886(d)(4)(C)(iii) of the Act requires that beginning with FY 1991, reclassification and recalibration changes be made in a manner that assures that the aggregate payments are neither greater than nor less than the aggregate payments that would have been made without the changes. Although normalization is intended to achieve this effect, equating the average case weight after recalibration to the average case weight before recalibration does not necessarily achieve budget neutrality with respect to aggregate payments to hospitals because payment to hospitals is affected by factors other than average case weight. Therefore, as we have done in past years and as discussed in section II.A.4.b of the Addendum to this proposed rule, we are proposing to make a budget neutrality adjustment to assure that the requirement of section 1886(d)(4)(C)(iii) of the Act is met.

III. Proposed Changes to the Hospital Wage Index

A. Background

Section 1886(d)(3)(E) of the Act requires that, as part of the methodology for determining prospective payments to hospitals, the Secretary must adjust the standardized amounts ''for area differences in hospital wage levels by a factor (established by the Secretary) reflecting the relative hospital wage level in the geographic area of the hospital compared to the national average hospital wage level.'' In accordance with the broad discretion conferred by this provision, we currently define hospital labor market areas based on the definitions of Metropolitan Statistical Areas (MSAs) (and New England County Metropolitan Areas), issued by the Office of Management and Budget. In addition, as discussed below, we adjust the wage

index to take into account the geographic reclassification of hospitals in accordance with sections 1886(d)(8)(B) and 1886(d)(10) of the Act.

Section 1886(d)(3)(E) of the Act also requires that the wage index be updated annually beginning October 1, 1993. Furthermore, this section provides that the Secretary base the update on a survey of wages and wage-related costs of short-term, acute care hospitals. The survey should measure, to the extent feasible, the earnings and paid hours of employment by occupational category, and must exclude the wages and wage-related costs incurred in furnishing skilled nursing services.

B. FY 1997 Wage Index Update

The proposed FY 1997 wage index (effective for hospital discharges occurring on or after October 1, 1996 and before October 1, 1997) is based on the data collected from the Medicare cost reports submitted by hospitals for cost reporting periods beginning in FY 1993 (the FY 1996 wage index is based on FY 1992 wage data). We propose to use the same categories of data that were used in the FY 1996 wage index. Therefore, the proposed FY 1997 wage index reflects the following:

- Total salaries and hours from short-term, acute care hospitals.
- Home office costs and hours.
- Fringe benefits associated with hospital and home office salaries.
- Direct patient care contract labor costs and hours.
- The exclusion of salaries and hours for nonhospital type services such as skilled nursing facility services, home health services, or other subprovider components that are not subject to the prospective payment system.

Finally, we are also proposing to make a minor revision to § 412.63(s)(1) to state clearly that we update the wage index annually as required by section 1886(d)(3)(E) of the Act.

1. Verification of Wage Data From the Medicare Cost Report

The data for the proposed FY 1997 wage index were obtained from Worksheet S–3, Part II of the Medicare cost report. The data file used to construct the proposed wage index includes FY 1993 data submitted to the Hospital Cost Report Information System (HCRIS) file as of the end of January 1996. As in past years, we performed an intensive review of the wage data, mostly through the use of edits designed to identify aberrant data.

Of the 5,222 hospitals in the data base, 2,814 hospitals had data elements that failed an initial edit. In mid-February 1996, intermediaries contacted hospitals to revise or verify data elements that resulted in the edit failures. Next, to check any revisions since the first edit, as well as to apply additional edits based on the distribution of the data, we subjected all of the data to edits a second time. The intermediaries were instructed to transmit any revisions in hospitals' wage data made as a result of this second review. As of March 14, 1996, only 21 hospitals still had unresolved data elements. These unresolved data elements are included in the calculation of the proposed FY 1997 wage index pending their resolution before calculation of the final FY 1997 wage index. We have instructed the intermediaries to complete their verification of questionable data elements and to transmit any changes to the wage data (through HCRIS) no later than June 17, 1996. We expect that all unresolved data elements will be resolved by that date, and that the revised data will be reflected in the final rule.

2. Computation of the Wage Index

The method used to compute the proposed wage index is as follows:

Step 1—As noted above, we are proposing to base the FY 1997 wage index on wage data reported on the FY 1993 cost reports. We gathered data from each of the non-Federal short-term, acute care hospitals for which data were reported on the Worksheet S–3, Part II of the Medicare cost report for the hospital's cost reporting periods beginning on or after October 1, 1992 and before October 1, 1993. In addition, we included data from a few hospitals that had cost reporting periods beginning in September 1992 and reported a cost reporting period exceeding 52 weeks. The data were included because no other data from these hospitals would be available for the cost reporting period described above, and particular labor market areas might be affected due to the omission of these hospitals. However, we generally describe these wage data as FY 1993 data.

Step 2—For each hospital, we subtracted the excluded salaries (that is, direct salaries attributable to skilled nursing facility services, home health services, and other subprovider components not subject to the prospective payment system) from gross hospital salaries to determine net hospital salaries. To determine total salaries plus fringe benefits, we added direct patient care contract labor costs, hospital fringe benefits, and any home office salaries and fringe benefits reported by the hospital, to the net hospital salaries.

Step 3—For each hospital, we adjusted the total salaries plus fringe benefits resulting from Step 2 to a common period to determine total adjusted salaries. To make the wage inflation adjustment, we used the percentage change in average hourly earnings for each 30-day increment from October 14, 1992 through September 15, 1994, for hospital industry workers from Standard Industry Classification 806, Bureau of Labor Statistics Employment and Earnings Bulletin. The annual inflation rates used were 4.8 percent for FY 1992, 3.6 percent for FY 1993, and 2.7 percent for FY 1994. The inflation factors used to inflate the hospital's data were based on the midpoint of the cost reporting period as indicated below.

MIDPOINT OF COST REPORTING PERIOD

After	Before	Adjustment factor
10/14/92	11/15/92	1.044482
11/14/92	12/15/92	1.041408
12/14/92	01/15/93	1.038343
01/14/93	02/15/93	1.035287
02/14/93	03/15/93	1.032240
03/14/93	04/15/93	1.029203
04/14/93	05/15/93	1.026174
05/14/93	06/15/93	1.023154
06/14/93	07/15/93	1.020143
07/14/93	08/15/93	1.017141
08/14/93	09/15/93	1.014147
09/14/93	10/15/93	1.011163
10/14/93	11/15/93	1.008920
11/14/93	12/15/93	1.006683
12/14/93	01/15/94	1.004450
01/14/94	02/15/94	1.002223
02/14/94	03/15/94	1.000000
03/14/94	04/15/94	0.997782
04/14/94	05/15/94	0.995570
05/14/94	06/15/94	0.993362
06/14/94	07/15/94	0.991159
07/14/94	08/15/94	0.988961
08/14/94	09/15/94	0.986767

For example, the midpoint of a cost reporting period beginning January 1, 1993 and ending December 31, 1993 is June 30, 1993. An inflation adjustment factor of 1.020143 would be applied to the wages of a hospital with such a cost reporting period. In addition, for the data for any cost reporting period that began in FY 1993 and covers a period of less than 360 days or greater than 370 days, we annualized the data to reflect a 1-year cost report. Annualization is accomplished by dividing the data by the number of days in the cost report and then multiplying the results by 365.

Step 4—For each hospital, we subtracted the reported excluded hours from the gross hospital hours to determine net hospital hours. We

increased the net hours by the addition of any direct patient care contract labor hours and home office hours to determine total hours.

Step 5—As part of our editing process, we deleted data for eight hospitals for which we lacked sufficient documentation to verify data that failed edits because the hospitals are no longer participating in the Medicare program or are in bankruptcy status. We retained the data for other hospitals that are no longer participating in the Medicare program because these hospitals reflected the relative wage levels in their labor market areas during their FY 1993 cost reporting period.

Step 6—Each hospital was assigned to its appropriate urban or rural labor market area prior to any reclassifications under sections 1886(d)(8)(B) or 1886(d)(10) of the Act. Within each urban or rural labor market area, we added the total adjusted salaries plus fringe benefits obtained in Step 3 for all hospitals in that area to determine the total adjusted salaries plus fringe benefits for the labor market area.

Step 7—We divided the total adjusted salaries plus fringe benefits obtained in Step 6 by the sum of the total hours (from Step 4) for all hospitals in each labor market area to determine an average hourly wage for the area.

Step 8—We added the total adjusted salaries plus fringe benefits obtained in Step 3 for all hospitals in the nation and then divided the sum by the national sum of total hours from Step 4 to arrive at a national average hourly wage. Using the data as described above, the national average hourly wage is $19.5094.

Step 9—For each urban or rural labor market area, we calculated the hospital wage index value by dividing the area average hourly wage obtained in Step 7 by the national average hourly wage computed in Step 8.

3. Revisions to the Wage Index Based on Hospital Redesignation

Under section 1886(d)(8)(B) of the Act, hospitals in certain rural counties adjacent to one or more MSAs are considered to be located in one of the adjacent MSAs if certain standards are met. Under section 1886(d)(10) of the Act, the Medicare Geographic Classification Review Board (MGCRB) considers applications by hospitals for geographic reclassification for purposes of payment under the prospective payment system.

The methodology for determining the wage index values for redesignated hospitals is applied jointly to the hospitals located in those rural counties that were deemed urban under section 1886(d)(8)(B) of the Act and those hospitals that were reclassified as a result of the MGCRB decisions under section 1886(d)(10) of the Act. Section 1886(d)(8)(C) of the Act provides that the application of the wage index to redesignated hospitals is dependent on the hypothetical impact that the wage data from these hospitals would have on the wage index value for the area to which they have been redesignated. Therefore, as provided in section 1886(d)(8)(C) of the Act, the wage index values were determined by considering the following:

- If including the wage data for the redesignated hospitals reduces the MSA wage index value by 1 percentage point or less, the MSA wage index value determined exclusive of the wage data for the redesignated hospitals applies to the redesignated hospitals.
- If including the wage data for the redesignated hospitals reduces the wage index value for the area to which the hospitals are redesignated by more than 1 percentage point, the hospitals that are redesignated are subject to the wage index value of the area that results from including the wage data of the redesignated hospitals (the ''combined'' wage index value). However, the wage index value for the redesignated hospitals cannot be reduced below the wage index value for the rural areas of the State in which the hospitals are located.
- If including the wage data for the redesignated hospitals increases the MSA wage index value, the MSA and the redesignated hospitals receive the combined wage index value.
- Rural areas whose wage index values would be reduced by excluding the data for hospitals that have been redesignated to another area continue to have their wage index calculated as if no redesignation had occurred. Those rural areas whose wage index values increase as a result of excluding the wage data for the hospitals that have been redesignated to another area have their wage indexes calculated exclusive of the redesignated hospitals.
- The wage index value for an urban area is calculated exclusive of the wage data for hospitals that have been reclassified to another area. However, geographic reclassification may not reduce the wage index for an urban area below the Statewide rural average, provided the wage index prior to reclassification was greater than the Statewide rural wage index value.
- A change in classification of hospitals from one area to another may not result in the reduction in the wage index for any urban area whose wage index is below the rural wage index for the State. This provision also applies to any urban area that encompasses an entire State.

We note that, except for those rural areas where redesignation would reduce the rural wage index value, and those urban areas whose wage index values are already below the rural wage index and would be reduced by redesignations, the wage index value for each area is computed exclusive of the data for hospitals that have been redesignated from the area for purposes of their wage index. As a result, several MSAs listed in Table 4a have no hospitals remaining in the MSA. This is because all the hospitals originally in these MSAs have been reclassified to another area by the MGCRB. These areas receive the prereclassified wage index value. The prereclassified wage index value will apply as long as the MSA remains empty.

The proposed revised wage index values for FY 1997 are shown in Tables 4a, 4b, and 4c in the Addendum to this proposed rule. Hospitals that are redesignated should use the wage index values shown in Table 4c. For some areas, more than one wage index value will be shown in Table 4c. This occurs when hospitals from more than one State are included in the group of redesignated hospitals, and one State has a higher Statewide rural wage index value than the wage index value otherwise applicable to the redesignated hospitals. Tables 4d and 4e list the average hourly wage for each labor market area, prior to the redesignation of hospitals, based on the FY 1993 wage data. (We note that in Tables 4a, 4c, and 4d, we have revised several of the titles for urban areas to be consistent with OMB titles. For example, the title for urban area 1123 is changed from Boston-Brockton-Nashua, MA–NH to Boston-Worcester-Lawrence-Lowell-Brockton, MA–NH. These are nomenclature changes only.) In addition, Table 3C in the Addendum to this proposed rule includes the adjusted average hourly wage for each hospital based on the FY 1993 data. The MGCRB will use the average hourly wage published in the final rule to evaluate a hospital's application for reclassification, unless that average hourly wage is later revised in accordance with the wage data correction policy described in § 412.63(s)(2). In such cases, the MGCRB will use the most recent revised data used for purposes of the hospital wage index. Hospitals that choose to apply before publication of the final rule can use the proposed wage data in applying to the MGCRB for wage index reclassifications that would be effective for FY 1998. We note that in

adjudicating these wage reclassification requests during FY 1997, the MGCRB will use the average hourly wages for each hospital and labor market area that are reflected in the final FY 1997 wage index.

At the time this proposed wage index was constructed, the MGCRB had completed its review. The proposed FY 1997 wage index values incorporate all 391 hospitals redesignated for purposes of the wage index (hospitals redesignated under section 1886(d)(8)(B) or 1886(d)(10) of the Act) for FY 1997. The final number of reclassifications may be different because some MGCRB decisions are still under review by the Administrator and because some hospitals may withdraw their requests for reclassification.

Any changes to the wage index that result from withdrawals of requests for reclassification, wage index corrections, appeals, and the Administrator's review process will be incorporated into the wage index values published in the final rule. The changes may affect not only the wage index value for specific geographic areas, but also whether redesignated hospitals receive the wage index value for the area to which they are redesignated, or a wage index that includes the data for both the hospitals already in the area and the redesignated hospitals. Further, the wage index value for the area from which the hospitals are redesignated may be affected.

Under § 412.273, hospitals that have been reclassified by the MGCRB are permitted to withdraw their applications within 45 days of the publication of this Federal Register document. The request for withdrawal of an application for reclassification that would be effective in FY 1997 must be received by the MGCRB by July 15, 1996. A hospital that requests to withdraw its application may not later request that the MGCRB decision be reinstated.

C. Requests for Wage Data Corrections

To allow hospitals more time to evaluate the wage data used to construct the proposed FY 1997 hospital wage index, we have made available to the public a diskette containing the FY 1993 hospital wage data. In a memorandum dated March 1, 1996, we instructed all Medicare intermediaries to inform the prospective payment hospitals they serve that the diskette would be available approximately mid-March 1996. The intermediaries were also instructed to advise hospitals of the alternative availability of these data either through their representative hospital organizations or directly from HCFA (using order forms provided by the intermediary). Additional details on ordering this data file are discussed below in section VIII.B of this preamble, ''Requests for Data from the Public.''

In addition, as discussed above in section III.B.3 of this preamble, Table 3C, in the Addendum to this proposed rule, contains each hospital's adjusted average hourly wage used to construct the proposed wage index values. A hospital can verify its average hourly wage as reflected on its cost report (after taking into account any adjustments made by the intermediary) by dividing the adjusted average hourly wage in Table 3C by the applicable wage inflation adjustment factors as set forth above in Step 3 of the computation of the wage index. An updated Table 3C (along with applicable wage inflation adjustment factors) will be included in the final rule.

We believe hospitals have had ample time to ensure the accuracy of their FY 1993 wage data. Moreover, the ultimate responsibility for accurately completing the cost report rests with the hospital, which must attest to the accuracy of the data at the time the cost report is filed. However, if after review of the diskette or Table 3C, a hospital believes that its FY 1993 wage data have been incorrectly reported, the hospital must submit corrections along with complete supporting documentation to its intermediary by May 15, 1996. To be reflected in the final wage index, any wage data corrections must be reviewed by the intermediary and transmitted to HCFA (through HCRIS) on or before June 17, 1996. These deadlines, which correspond to the deadlines we used last year for the FY 1996 wage index, are necessary to allow sufficient time to review and process the data so that the final wage index calculation can be completed for development of the final prospective payment rates to be published by September 1, 1996. We cannot guarantee that corrections transmitted to HCFA after June 17, 1996, will be reflected in the final wage index.

After reviewing requested changes submitted by hospitals, intermediaries will transmit any revised cost reports to HCRIS and forward a copy of the revised Worksheet S–3, Part II to the hospitals. If requested changes are not accepted, fiscal intermediaries will notify hospitals in writing of reasons why the changes were not accepted. This procedure will ensure that hospitals have every opportunity to verify the data that will be used to construct their wage index values. We believe that fiscal intermediaries are generally in the best position to make evaluations regarding the appropriateness of a particular cost and whether it should be included in the wage index data. However, if a hospital disagrees with the intermediary's resolution of a requested change, the hospital may contact HCFA in an effort to resolve the dispute. We note that the June 17 deadline also applies to these requested changes.

We have created the process described above to resolve all substantive wage data correction disputes before we finalize the wage data for the FY 1997 payment rates. Accordingly, hospitals that do not meet the procedural deadlines set forth above will not be afforded a later opportunity to submit wage corrections or to dispute the intermediary's decision with respect to requested changes.

We intend to make another diskette available in mid-August that will contain the wage data that will be used to construct the wage index values in the final rule. As with the diskette made available in March 1996, HCFA will make the August diskette available to hospital associations and the public. This August diskette, however, is being made available only for the limited purpose of identifying any potential errors made by HCFA or the intermediary in the entry of the final wage data that result from the process described above, not for the initiation of new wage data correction requests. Hospitals are encouraged to review their hospital wage data promptly after the release of the second diskette.

If, after reviewing the August diskette, a hospital believes that its wage data are incorrect due to a fiscal intermediary or HCFA error in the entry or tabulation of the final wage data, it should send a letter to both its fiscal intermediary and HCFA. The letters to the intermediary and HCFA should outline why the hospital believes an error exists. These requests must be *received* by HCFA and the intermediaries no later than September 16, 1996. We have set this year's deadline one week earlier than last year's deadline because we found the later deadline made it difficult to evaluate the requests and recalculate the wage index values before the start of FY 1997 (that is, October 1, 1996). Requests should be sent to: Health Care Financing Administration; Office of Hospital Policy; Attention: Stephen Phillips, Technical Advisor; Division of Prospective Payment System; C5–06–27; 7500 Security Boulevard; Baltimore, Maryland 21244–1850. The intermediary will review requests upon receipt, and, if it is determined that an intermediary or HCFA error exists, the fiscal intermediary will notify HCFA immediately.

After mid-August, we will make changes to the hospital wage data only in those very limited situations involving an error by the intermediary or HCFA that the hospital could not have known about before its review of the August diskette. Specifically, after that point, neither the intermediary nor HCFA will accept the following types of requests in conjunction with this process:

- Requests for wage data corrections that were submitted too late to be included in the data transmitted to the HCRIS system on or before June 17, 1996;
- Requests for correction of errors made by the hospital that were not, but could have been, identified during the hospital's review of the March 1996 data; or,
- Requests to revisit factual determinations or policy interpretations made by the intermediary or HCFA during the wage data correction process.

Verified corrections to the wage index received timely (that is, by September 16, 1996) will be effective October 1, 1996.

Again, we believe the wage data correction process described above provides hospitals with sufficient opportunity to bring errors made during the preparation of the Worksheet S–3 to the intermediary's attention. Moreover, because hospitals will have access to the wage data in mid-August, they will have the opportunity to detect any data entry or tabulation errors made by the intermediary or HCFA before the implementation of the FY 1997 wage index on October 1, 1996. If hospitals avail themselves of this opportunity, the wage index implemented on October 1 should be free of such errors. Nevertheless, in the unlikely event that such errors should occur, we retain the right to make midyear changes to the wage index under very limited circumstances.

Specifically, in accordance with § 412.63(s)(2), we may make midyear corrections to the wage index only in those limited circumstances where a hospital can show: (1) that the intermediary or HCFA made an error in tabulating its data, and (2) that the hospital could not have known about the error, or did not have an opportunity to correct the error, before the beginning of FY 1997 (that is, by the September 16, 1996 deadline). As indicated earlier, since a hospital will have the opportunity to verify its data, and the intermediary will notify the hospital of any changes, we do not foresee any specific circumstances under which midyear corrections would be made. However, should a midyear correction be necessary, the wage index change for the affected area will be effective prospectively from the date the correction is made.

D. Contract Labor—Costs Included in the Hospital Wage Index

Our policy concerning inclusion of contract labor costs for purposes of calculating the wage index has evolved over the past several years. Primarily, this has occurred as we recognized the role of contract labor in meeting special personnel needs of many hospitals. In addition, improvements in the wage data have allowed us to more accurately identify contract labor costs and hours. As a result, effective with the FY 1994 wage index, we included the costs of direct patient care contract services in the wage index calculation. Effective with the FY 1999 wage index, which will use data from FY 1995 cost reports, we will begin to include the costs and hours of certain management contract services.

In this proposed rule, we are soliciting comments from the public regarding further expansion of the types of contract labor costs included in the wage index. The following background discussion provides a general overview of the issues related to including contract labor costs in the wage index calculation. We also list nine specific issues for which we are seeking public comment.

In the May 9, 1990 proposed rule (55 FR 19442), we reported the results of the 1988 wage index survey which collected, among other information, data on the costs and hours associated with direct patient care contract labor. All prospective payment hospitals completed the wage survey for their cost reporting periods ending in calendar year 1988. The survey data indicated that hospitals had difficulty in tracking and recording the actual hours worked associated with the contract labor. In addition, there were reporting inconsistencies. For example, some hospitals inappropriately reported patient care services furnished directly by physicians, which are not included in the wage data because they are paid under Medicare Part B rather than Part A.

In the May 9, 1990 proposed rule, we also discussed public comments we received in response to issues we raised related to including contract labor costs in the wage index. Specifically, in the May 8, 1989 proposed rule (54 FR 19647), we requested comment on the following issues:

- Should the wage index include data on contract labor?
- Should the definition of contract services in the wage index survey be expanded to include services indirectly related to patient care, such as billing or housekeeping services?

A majority of the commenters supported the inclusion of contract services, and many argued for the expansion of contract labor services to include indirect patient care services. Those opposed to including contract services, in addition to some commenters who supported including contract service costs, were concerned about the difficulty of accurately tracking and recording hours worked for all types of contract labor. Other commenters were also concerned that if a hospital contracts for services from outside its labor market area, the contract wages could artificially increase or decrease the hospital's area wage index. Based on the comments and the overall poor quality of the 1988 survey data, we decided to exclude all contract labor from the FY 1991 wage index.

We stated that we would continue our analysis of contract labor. In addition, we announced that we would develop a new wage index survey with improved instructions and auditing criteria to facilitate the inclusion of contract labor in future wage index updates. The new survey, Worksheet S–3, Part II, was included in the hospital cost report effective with cost reporting periods beginning on or after October 1, 1989.

The Worksheet S–3, Part II consists of detailed information for use in the hospital wage index including contract labor for direct patient care services. In the instructions for completing this worksheet, contract labor costs and hours were limited to labor-related payments and hours attributable to direct patient care contract services, such as nursing services. Specifically, we instructed hospitals to exclude indirect patient care contract services (for example, management and housekeeping services), nonlabor-related expenses (for example, equipment and supplies), and any contract services for which labor-related payments and hours could not be accurately determined.

In the September 4, 1990 final rule (55 FR 36036), we discussed additional comments we received on the contract labor issue. Those commenters who supported the inclusion of contract labor stated that some hospitals, especially rural hospitals, are dependent on contract labor for nursing services, and it would be unfair not to include these wage data. Other commenters requested that the definition of contract

labor be expanded to include indirect patient care services.

We also received several comments requesting that we continue to exclude contract labor from the wage index. These commenters stated that the contract labor data are not reliable because of the difficulty in tracking and reporting hours and the lack of consistency in the reporting of contract labor. In addition, inclusion of nonlabor contract costs would inappropriately drive up labor costs, and contract labor brought in from outside the labor market area would artificially increase or decrease the area wage index value. Finally, commenters were concerned that contract labor costs are too variable, temporary, and not reflective of true wage costs. Therefore, some suggested that contract labor should not be included in the wage index.

The FY 1994 wage index, which was based on the data collected on the Worksheet S–3, Part II, was the first to include direct patient care contract labor costs. In making the decision to include these costs, we analyzed hospitals' FY 1990 data to determine if it was sufficiently complete for inclusion in the wage index calculation (see the May 26, 1993 proposed rule (58 FR 30236)). We noted that, in most labor market areas, including contract labor in the wage index computation had little effect on the average hourly wage. We further stated that, based on our analysis of the data, including direct patient care contract labor would more accurately and fairly reflect wage levels across hospitals and MSAs. In the September 1, 1993 final rule, we also responded to comments from the hospital industry expressing concern that we did not recognize the costs of certain contract management services (58 FR 46296). In particular, many rural hospitals stated they were either unable to recruit or afford top managers such as hospital administrators and must contract for these services.

In the September 1, 1994 final rule (59 FR 45355), we expanded the definition of contract labor for purposes of determining the hospital wage index to include the personnel costs and hours associated with certain contract management personnel. Contract management services would be limited to individuals working in the top four positions in the hospital: the Chief Executive Officer/Hospital Administrator, Chief Operating Officer, Chief Financial Officer, and Nursing Administrator. We noted that while exact titles may vary, individuals should be performing essentially the same duties as customarily assigned these management positions.

We further noted that, since the cost report did not provide at that time for the collection of management contract data, this revised definition would not be effective until cost reporting periods beginning on or after October 1, 1994 (FY 1995). Hospitals were instructed to continue to exclude all management contract costs and hours until the FY 1995 data were reported (these data will be used to compute the FY 1999 wage index). In addition, we began requiring hospitals to provide descriptions and aggregate totals for all management contracts and complete details on all direct patient care contracts on the Form HCFA–339 (the Provider Cost Report Reimbursement Questionnaire). A hospital must file this form with its corresponding cost report.

We continue to receive requests that we expand our contract labor definition to include more types of contract services in the wage index. In particular, we have been asked to include the costs for pharmacy and laboratory services on the basis that these services are consistent with our definition of direct patient care (see the September 1, 1995 final rule (60 FR 45792)). Others have asked that we expand our definition to include all contracted services, both direct and indirect patient care services, in order to more appropriately calculate relative hospital wage costs.

We have limited the contract services that are included in the wage index to direct patient care services and specific management services for several reasons. First, hospitals reported difficulty in accurately tracking the hours associated with contract services, especially for off-site facilities that serve more than one hospital. Second, we are concerned about the contractor's ability to separate nonlabor costs from labor costs. We believe that the generally higher costs for contract labor compared to salaried labor, due at least in part to the added costs of overhead and supplies not separately identified in most contracts, may distort the wage index. Finally, we are concerned that it is difficult to remove the costs and hours for services such as legal and accounting from total management contracts.

Our goal is to ensure that our wage index policy continues to be responsive to the changing need for contract labor, allowing those hospitals that must depend on contract labor to supply needed services to reflect those costs in their wage data. At the same time, however, we wish to avoid providing an opportunity for hospitals to inflate their average hourly wage inappropriately by including nonlabor contract costs. The advantage of our approach of including only contract labor costs and hours associated with direct patient care and specific management services is that it minimizes distortions in the wage index that are due to a hospital's inability to identify and exclude nonlabor costs. While changes to the wage index values are made in a budget neutral manner and are not expected to affect aggregate payments, we strive for policies that are equitable for all hospitals.

Finally, due to the 4-year time lag between the cost reporting period itself and the fiscal year when data for that period are used in calculating the wage index, it is important that we anticipate any need to change our policy on contract labor. Therefore, in order to formulate the most responsive and responsible policy, we are soliciting comments on the following issues:

- To what extent do hospitals rely on the use of contract services?
- For which services are contracts typically used?
- Can hospitals accurately determine hours related to contract services?
- Can hospitals accurately isolate labor-related costs from nonlabor-related costs?
- Should the contract labor definition be expanded to include contract services indirectly related to patient care?
- If contract labor remains limited to direct patient care, what categories of services, if any, in addition to those identified above, should be included?
- Would the wage index more accurately reflect relative wage levels if we did not limit contract labor to direct patient care (generally high wage) services?
- Would expanding the types of contract labor that are included in the wage index provide less incentive to hospitals to keep their labor costs low, as higher labor costs may result in a higher wage index value for that hospital or allow it to reclassify to a labor market with a higher wage index?
- What other issues should be considered in revising the policy for including contract labor in the wage index?

E. Puerto Rico Wage Index Values

For several years, hospitals in Puerto Rico have experienced large swings in their wage index values. In the September 1, 1995 final rule, we responded to two comments suggesting changes to the wage index for hospitals in Puerto Rico (60 FR 45796). One suggestion was to establish a floor for the wage index values of the Puerto Rico labor market areas while the other was to eliminate the rural area classification in Puerto Rico and classify the rural

hospitals to the nearest urban area. Although we did not adopt either of these suggestions, we stated that we would continue to study the issue of wage index values in Puerto Rico.

To evaluate the effect that these large changes in wage index values have on hospitals in Puerto Rico, we examined the most recent Medicare cost data for these hospitals. Of the 50 hospitals contained in our data base, 64 percent had improved Medicare operating margins from 1992 to 1993. Of the 26 hospitals with data available for 1994, we found that 65 percent improved financially from 1993 to 1994. Based on this analysis, we do not believe that the wage index changes have had a detrimental effect on these hospitals as a group. However, there are individual hospitals that are not faring as well.

We recognize that large shifts in the wage index values can cause shifts in the payment levels for a particular MSA. Because three of the six MSAs in Puerto Rico (Aguadilla, Arecibo, and Caguas) as well as the rural area have four or fewer hospitals, a large change in one hospital's wage data can cause a large increase or decrease in the wage index value for the entire MSA. One possible method to limit these annual swings in wage index values would be to create a single labor market area encompassing all the hospitals in Puerto Rico. That is, the six MSAs and the rural area would be combined into one area with one wage index value. A single labor market area would create a much larger set of hospitals to develop aggregate wage amounts and would mitigate situations where a change in the wage data of a single hospital has a large effect on the wage index of an MSA.

Because creating one MSA for Puerto Rico would be implemented in a budget neutral manner, the effect would be to raise wage index values for some hospitals in Puerto Rico and to lower the values for others. Using the FY 1993 wage data, the following table shows the effect this change would have on the proposed wage index levels.

Area	Number of hospitals	Proposed wage index	One area wage index	Percent change
Rural	4	0.4182	0.4555	8.92
Aguadilla	2	0.4430	0.4555	2.82
Arecibo	2	0.4661	0.4555	−2.27
Caguas	4	0.4638	0.4555	−1.79
Mayaguez	5	0.4186	0.4555	8.82
Ponce	7	0.4500	0.4555	1.22
San Juan	29	0.4616	0.4555	−1.32

Because of the negative effects on some hospitals, we are soliciting comment on this approach for mitigating the fluctuations in wage index values for hospitals in Puerto Rico. The potential change would have no impact on hospitals outside Puerto Rico.

F. Proposed Changes to the MGCRB Composition and Criteria

Under section 1886(d)(10) of the Act, the MGCRB considers applications by hospitals for geographic reclassification for purposes of payment under the prospective payment system. Guidelines concerning the criteria and conditions for hospital reclassification are located at §§ 412.230 through 412.236. The purpose of these criteria is to provide direction, to both the MGCRB and those hospitals seeking geographic reclassification, with respect to the situations that merit an exception to the rules governing the geographic classification of hospitals under the prospective payment system. The composition of the MGCRB and the procedures it follows in making reclassification determinations are set forth in §§ 412.246 through 412.280.

As discussed in detail below, we are proposing to make one change to the MGCRB regulations. In addition, we are soliciting comments on sources of data that could be used to identify the occupational mix in a given MSA.

1. MGCRB Composition (§ 412.246)

Section 1886(d)(10)(B)(i) of the Act provides that the MGCRB is composed of five members appointed by the Secretary. This provision is implemented in regulations at § 412.246(a). Two of the members must be representative of the concerns of rural hospitals and at least one member must be knowledgeable in the field of analyzing costs of providing inpatient hospital services. Under current § 412.246(b), the term of office for an MGCRB member is 3 years, and appointments are limited to two consecutive 3-year terms. This section further provides that to permit staggered terms of office, initial appointments may be for shorter terms. Finally, the Secretary is permitted to terminate a member's tenure before his or her full term has expired.

Since the establishment of the MGCRB 6 years ago, we have never modified the regulations that govern the MGCRB's composition, which were originally modeled after the procedural regulations of the Provider Reimbursement Review Board (PRRB). We believe that it is now appropriate to update the regulations that govern members' terms of office in light of agency experience.

Appointments to the Board must comply with statutory requirements concerning rural representatives and a hospital cost expert. Since the appointment of the initial Board, the Secretary has had difficulty recruiting additional, qualified persons to serve on the MGCRB. In addition, we solicited comment in the June 2, 1995 proposed rule (60 FR 29218) on the idea of eliminating the MGCRB and transferring its functions back to HCFA. This may have caused qualified members to lose interest in becoming or remaining Board members. We no longer believe that there needs to be a limitation on the number of terms a member may serve. Deleting the term limit requirement would allow for increased flexibility in appointing and recruiting qualified Board members. Flexibility in this area will allow the Secretary to ensure that Board members are in place to meet the tight statutory deadlines associated with filing and adjudicating MGCRB applications. (Under sections 1886(d)(10)(C) (ii) and (iii) of the Act, a hospital requesting a change in geographic classification must submit its application to the Board not later than the first day of the preceding fiscal year. Once the application is received the Board must render a decision within 180 days.) Therefore, we are proposing to eliminate the current requirement at § 412.246(b) that a Board member can serve for only two consecutive 3-year terms.

We also considered eliminating any requirement on the length of an individual term. However, we believe that maintaining a term of office not to exceed 3 years is appropriate. If we

deleted this requirement, then the Secretary could not periodically reevaluate membership of the Board. We would, however, propose that a term of office would not be limited only to a term of exactly 3 years. Specifically, we would revise § 412.246(b) to provide that an appointment to the MGCRB may be for any term not to exceed 3 years. We believe that both of these proposed changes would allow the Secretary maximum flexibility to recruit and retain qualified Board members.

Under the proposed revisions, the Secretary would continue to be able to terminate a member's tenure before his or her full term has expired. This provision was modeled after the provisions of the PRRB under which the Secretary has the authority to terminate a Board member for good cause. We believe that it is appropriate for the Secretary to be able to exercise a similar termination authority over the MGCRB in case a member of the MGCRB fails to carry out his or her duties under the Act and regulations. Therefore, we would retain this provision. We note that the Secretary has not invoked this authority to date with either the PRRB or the MGCRB.

2. Occupational Mix Adjustment

Section 1886(d)(10)(D)(i) of the Act requires the Secretary to publish guidelines to be utilized by the MGCRB in rendering decisions on applications submitted for geographic reclassification. Those are to include guidelines for ''comparing wages, taking into account (to the extent the Secretary determines appropriate) occupational mix, in the area in which the hospital is classified and the area in which the hospital is applying to be classified.''

Section 412.230(e) describes the criteria for hospital reclassification for purposes of the wage index. One of the criteria relates to the relationship between the hospital's wages and those of the area to which it seeks reclassification. Specifically, § 412.230(e)(1)(iv) provides that the hospital must demonstrate that its wages are at least 84 percent of the average hourly wage of hospitals in the area to which it seeks reclassification, or that the hospital's average hourly wage weighted for occupational mix is at least 90 percent of the average hourly wage of hospitals in the area to which it seeks reclassification. Under §§ 412.232(c) and 412.234(b), a group of hospitals seeking to reclassify must demonstrate that its aggregate average hourly wage is at least 85 percent of the average hourly wage of the hospitals in the area to which it seeks reclassification. These sections also provide that the threshold for occupational-mix adjusted hourly wage for hospital groups is the same as that for a single hospital, that is, 90 percent.

In the September 6, 1990 interim final rule (55 FR 36760), we stated that the acceptable sources for occupational mix data were the American Hospital Association (AHA) or the Bureau of Labor Statistics. Since publication of that document, the Bureau of Labor has discontinued its hospital wage surveys. Thus, the only currently acceptable occupational mix data source is the AHA Survey Data. We have been informed by the AHA that the survey for 1993 will be the last survey to collect information on the Hospital Personnel by Occupational Category. Therefore, requests filed on or before October 1, 1996 for FY 1998 reclassification, which use FY 1993 wage data, may be the last for which we have an appropriate source of occupational mix data.

As we stated in the June 4, 1991 final rule with comment period (56 FR 25458), the reclassification process requires the use of occupational mix data that are comparable across areas and can be consistently applied. We are unaware of any sources other than the AHA data that meet these criteria.

We have not proposed collecting occupational mix data ourselves in light of past experience. We attempted to collect such data some time ago. In the September 30, 1988 Federal Register (53 FR 38495), we reported on our efforts to collect 1986 occupational mix data as part of the Medicare National Uniform Reporting Demonstration project, to determine the feasibility of developing a wage index that would take into account occupational mix. The majority of hospitals (more than 60 percent) failed to complete or submit the survey. A number of surveys that were submitted were not filled out completely and appeared to have numerous errors. Moreover, we believe that collecting occupational mix data from hospitals would be inappropriately burdensome to the hospitals. In the past, we have received several comments from hospitals opposing HCFA's collection of occupational mix data (56 FR 43222), citing the prohibitive cost to hospitals of furnishing occupational mix data. Finally, even if we were to decide now to begin collecting occupational mix data, it would be at least 6 years before the data would be available for use.

In order to continue to allow the use of wage data weighted by occupational mix in wage index reclassification, we are seeking suggestions about any occupational mix data sources that are available on a national basis. In addition, we are willing to consider suggestions about other methods that would account for occupational mix in the wage index reclassification process.

IV. Rebasing and Revising of the Hospital Market Baskets

A. Operating Costs

1. Background

Effective for cost reporting periods beginning on or after July 1, 1979, we developed and adopted a hospital input price index (that is, the hospital ''market basket'') for operating costs. Although ''market basket'' technically describes the mix of goods and services used to produce hospital care, this term is also commonly used to denote the input price index (that is, cost category weights and price proxies combined) derived from that market basket. Accordingly, the term ''market basket'' as used in this document refers to the hospital input price index.

The percentage change in the market basket reflects the average change in the price of goods and services hospitals purchase in order to furnish inpatient care. We first used the market basket to adjust hospital cost limits by an amount that reflected the average increase in the prices of the goods and services used to furnish hospital inpatient care. This approach linked the increase in the cost limits to the efficient utilization of resources.

With the inception of the hospital inpatient prospective payment system on October 1, 1983, we continued to use the hospital market basket to update each hospital's 1981 inpatient operating cost per discharge used in establishing the FY 1984 standardized payment amounts. In addition, the projected change in the hospital market basket has been the integral component of the update factor by which the prospective payment rates are updated every year. Under section 1886(b)(3)(B)(i)(XII) of the Act, the prospective payment rates will be updated in FY 1997 by the projected increase in the hospital market basket minus 0.5 percentage points. A detailed explanation of the hospital market basket used to develop the prospective payment rates was published in the Federal Register on September 3, 1986 (51 FR 31461). For additional background information on general development of hospital input price indexes, we refer the reader to the article by Freeland, Anderson, and Schendler, ''National Hospital Input Price Index,'' *Health Care Financing Review*, Summer 1979, pp 37–61. We also refer the reader to the September 4, 1990 Federal Register (55 FR 35990) in which we discussed the previous

rebasing of the hospital input price index.

The hospital market basket is a fixed-weight, Laspeyres-type price index that is constructed in three steps. First, a base period is selected and total base period expenditures are estimated for mutually exclusive and exhaustive spending categories based upon type of expenditure. Then, the proportion of total costs that each category represents is determined. These proportions are called cost or expenditure weights. Second, each expenditure category is matched to an appropriate price/wage variable, referred to as a price proxy. These price proxies are price levels derived from a publicly available statistical series published on a consistent schedule, preferably at least on a quarterly basis. Third and finally, the price level for each spending category is multiplied by the expenditure weight for that category. The sum of these products (that is, the expenditure weights multiplied by the price levels) for all cost categories yields the composite index level in the market basket in a given year. Repeating this step for other years produces a series of market basket index levels over time. Dividing one index level by an earlier index level produces rates of growth in the input price index.

The market basket is described as a fixed-weight index because it answers the question of how much it would cost, at another time, to purchase the same mix of goods and services that was purchased in the base period. The effects on total expenditures resulting from changes in the quantity or mix of goods and services purchased subsequent to the base period are not considered. For example, shifting a traditionally inpatient type of care to an outpatient setting might affect the volume of inpatient goods and services purchased by the hospital, but would not be factored into the price change measured by a fixed weight hospital market basket.

We believe that it is desirable to rebase the market basket periodically so the cost weights reflect changes in the mix of goods and services that hospitals purchase (hospital inputs) in furnishing inpatient care. We last rebased the hospital market basket cost weights effective for FY 1991. This market basket, still used through FY 1996, reflected base year data from FY 1987 in the construction of the cost weights.

In its April 1, 1985 report to the Secretary (Appendix C of the June 10, 1985 proposed rule (50 FR 24446)), ProPAC supported HCFA's position on periodic rebasing, stating that the market basket cost weights should be recalculated or ''rebased'' at least every 5 years, or more frequently if significant changes in the weights occur. We note that there are separate market baskets for prospective payment hospitals and hospitals and hospital units excluded from the prospective payment system. The separate, excluded hospital market basket is set forth in section IV.A.5 of this preamble.

2. Rebasing and Revising the Hospital Market Basket

The terms rebasing and revising, while often used interchangeably, actually denote different activities. Rebasing means moving the base year for the structure of costs of an input price index (for example, we are proposing to move the base year cost structure from FY 1987 to FY 1992). Revising means changing data sources, cost categories, or price proxies used in the input price index.

We are proposing to use a rebased and revised hospital market basket in developing the FY 1997 update factor for the prospective payment rates. The new market basket would be rebased to reflect 1992, rather than 1987, cost data.

In developing the rebased and revised market basket, we reviewed hospital operating expenditure data for the market basket cost categories. In a change from previous methodology, we are relying primarily on Medicare hospital cost report data for the proposed rebasing. For the proposed market baskets, we used data on hospital expenditures for four major expense categories (wages and salaries, employee benefits, pharmaceuticals, and a residual ''all other'') from hospital cost reporting periods beginning in FY 1992 (that is, periods beginning on or after October 1, 1991 and before October 1, 1992). We refer to these as PPS–9 cost reports (the 9th year of the prospective payment system (PPS)). The market basket was previously based on 1987 expense data from the 1988 American Hospital Association (AHA) Annual Survey.

Expenses for wages and salaries, employee benefits, and pharmaceuticals were determined using data from PPS–9 cost reports as reported in the Hospital Cost Report Information System (HCRIS) files. We determined total professional fees using AHA Annual Survey data. Total professional fees include medical and nonmedical professional fees. Since the medical professional fees included in the compensation of provider-based physicians is paid under Medicare Part B, we analyzed HCRIS data to determine the professional component of provider-based physician compensation and subtracted it from total professional fees to obtain an estimate of nonmedical professional fees. Malpractice insurance costs were determined using the cost share for PPS–6 (cost reporting periods beginning in FY 1989), the last year these costs had to be treated separately from all other administrative and general costs, trended forward to 1992 based on the relative importance of malpractice costs found in the previous market basket. The All Other Expenses category was calculated in two steps. First, from PPS–9 cost reports, total operating expenses were tabulated by subtracting capital-related expenses, direct medical education expenses, and the medical professional fees from total expenses. Second, we subtracted the total of the five cost category expenses already determined from total operating expenses to obtain the All Other Expenses category.

After totals for these main cost categories (wages and salaries, employee benefits, professional fees, pharmaceuticals, malpractice insurance, and all other expenses) were calculated, we then determined the proportion each category represents of the total costs. These proportions represent the major rebased market basket weights. The differences between the six major categories for the proposed 1992-based index and the previous 1987-based index are summarized in Table 1 below.

TABLE 1.—COMPARISON OF 1992 AND 1987 PROSPECTIVE PAYMENT HOSPITAL OPERATING COST CATEGORIES AND WEIGHTS

Expense categories	Rebased 1992 hospital market basket	1987-based hospital market basket
Wages and Salaries	50.244	52.2
Employee Benefits	11.146	9.5
Nonmedical Professional Fees	2.127	1.6

TABLE 1.—COMPARISON OF 1992 AND 1987 PROSPECTIVE PAYMENT HOSPITAL OPERATING COST CATEGORIES AND WEIGHTS—Continued

Expense categories	Rebased 1992 hospital market basket	1987-based hospital market basket
Malpractice Insurance	1.189	1.4
Pharmaceuticals	4.162	3.9
All Other	31.132	31.4
Total	100.000	100.0

Note: Although we rounded the weights to the tenths decimal position in the 1987-based market basket as published in the September 4, 1990 final rule, we are presenting the 1992 weights in greater specificity.

Table 2 sets forth the proposed market basket cost categories, weights, and price proxies. Weights for the ''Utilities'' and the ''All Other'' cost categories, as well as the subcategories, were determined using the 1987 Department of Commerce's Bureau of Economic Analysis (BEA) Input-Output Table, from which data for the hospital industry were extracted. The BEA Input-Output database, which is updated at 5-year intervals, was most recently described in the Survey of Current Business, ''Benchmark Input-Output Accounts for the U.S. Economy, 1987'' (April 1994). We anticipate that the Department of Commerce will soon release 1992 cost data for use in determining the cost weights. If the data are released in time to be analyzed, we will use them in the final market basket for more refined estimates of cost expenditure weights.

We aged the 1987 cost shares to 1992 using historical price changes between 1987 and 1992 for each category. The aged shares were normalized to be consistent with the 1992 hospital cost report data. Relative weights for the new base year were then calculated for various expenditure categories. This work resulted in the identification of 26 separate cost categories in the rebased hospital market basket, two fewer categories than were included in the 1987-based market basket. Detailed descriptions of each category and respective price proxy are provided in Appendix C to this proposed rule.

TABLE 2.—PROPOSED 1992-BASED PROSPECTIVE PAYMENT HOSPITAL OPERATING COST CATEGORIES, WEIGHTS, AND PRICE PROXIES

Expense categories	Rebased 1992 hospital market basket	Price proxy
1. Compensation	61.390	
A. Wages and Salaries[1]	50.244	HCFA Occupational Wage Index.
B. Employee Benefits[1]	11.146	HCFA Occupational Benefits Index.
2. Professional Fees[1]	2.127	ECI—Compensation for Professional, Specialty & Technical.
3. Utilities	2.469	
A. Fuel, Oil, and Gasoline	0.345	PPI Refined Petroleum Products.
B. Electricity	1.349	PPI Commercial Electric Power.
C. Natural Gas	0.670	PPI Commercial Natural Gas.
D. Water and Sewerage	0.106	CPI–U Water & Sewerage Maintenance.
4. Professional Liability Insurance	1.189	HCFA Professional Liability Insurance Premium Index.
5. All Other	32.824	
A. All Other Products	24.033	
(1.) Pharmaceuticals	4.162	PPI Ethical (Prescription) Drugs.
(2.) Food	3.459	
a. Direct Purchase	2.363	PPI Processed Foods & Feeds.
b. Contract Service	1.096	CPI–U Food Away From Home.
(3.) Chemicals	3.795	PPI Industrial Chemicals.
(4.) Medical Instruments	3.128	PPI Medical Instruments & Equipment.
(5.) Photographic Supplies	0.399	PPI Photographic Supplies.
(6.) Rubber and Plastics	4.868	PPI Rubber & Plastic Products.
(7.) Paper Products	2.062	PPI Converted Paper & Paperboard Products.
(8.) Apparel	0.875	PPI Apparel.
(9.) Machinery and Equipment	0.211	PPI Machinery & Equipment.
(10.) Miscellaneous Products	1.074	PPI Finished Goods.
B. All Other Services	8.792	
(1.) Business Services[1]	3.823	ECI—Compensation for Private Workers in Business Services.
(2.) Computer Services[1]	1.927	AHE Computer & Data Processing Services.
(3.) Transportation Services	0.188	CPI-U Transportation.
(4.) Telephone Services	0.531	CPI-U Telephone Services.
(5.) Postage[1]	0.272	CPI-U Postage.
(6.) All Other: Labor Intensive*	1.707	ECI—Compensation for Private Service Occupations.
(7.) All Other: Nonlabor Intensive	0.344	CPI-U All Items.
Total	100.000	

[1] Labor-related.
NOTE: Due to rounding, weights may not sum to total.

The 1987-based market basket included a separate Blood Services cost category. In the 1992-based market basket, Blood Services is contained within the Chemicals cost category. In addition, the 1987-based cost category for Fuel Oil, Coal, etc. has been combined with the 1987-based Motor Gasoline cost category to form the 1992-based Fuel, Oil and Gasoline cost category. Both of these changes are based on revised cost categories from BEA. For comparison purposes, the 1987-based cost categories are set forth in Table 3.

TABLE 3.—1987-BASED PROSPECTIVE PAYMENT HOSPITAL OPERATING COST CATEGORIES, WEIGHTS, AND PRICE PROXIES

Expense categories	1987 hospital market basket	Price proxy
1. Compensation	61.7	
A. Wages and Salaries[1]	52.2	HCFA Occupational Wage Index.
B. Employee Benefits[1]	9.5	HCFA Occupational Benefits Index.
2. Professional Fees[1]	1.6	ECI—Wages & Salaries for Professional, Specialty & Technical.
3. Utilities	2.4	
A. Fuel, Oil, Coal, etc.	0.6	WPI Light Fuel Oils.
B. Electricity	1.1	WPI Industrial Power.
C. Natural Gas	0.3	WPI Natural Gas.
D. Motor Gasoline	0.2	WPI Gasoline.
E. Water and Sewerage	0.0	CPI–U Water & Sewerage Maintenance.
4. Professional Liability Insurance	1.4	HCFA Professional Liability Insurance Premiums.
5. All Other	32.8	
A. All Other Products	21.8	
(1.)Pharmaceuticals	3.9	WPI Prescription Drugs.
(2.) Food	3.3	
a. Direct Purchase	2.1	WPI Processed Foods.
b. Contract Service	1.2	CPI–U Food Away From Home.
(3.) Chemicals	3.1	WPI Industrial Chemicals.
(4.) Medical Instruments	2.7	WPI Medical Instruments & Equipment.
(5.) Photographic Supplies	2.6	WPI Photographic Supplies.
(6.) Rubber and Plastics	2.3	WPI Rubber & Plastic Products.
(7.) Paper Products	1.4	PPI Converted Paper & Paperboard Products.
(8.) Apparel	1.1	WPI Textile House furnishings.
(9.) Machinery and Equipment	0.4	WPI Machinery & Equipment.
(10.) Miscellaneous Products	0.8	WPI Finished Goods.
B. All Other Services	11.1	
(1.) Business Services[1]	3.8	AHE Business Services.
(2.) Computer Services[1]	2.0	AHE Computer & Data Processing Services.
(3.)Transportation Services	1.2	CPI–U Transportation.
(4.) Telephone Services	1.0	CPI–U Telephone Services.
(5.) Blood Services[1]	0.6	WPI Blood & Derivatives.
(6.) Postage[1]	0.4	CPI–U Postage.
(7.) All Other: Labor Intensive[1]	1.2	ECI—Wages and Salaries for Private Service Occupations.
(8.) All Other: Nonlabor Intensive	0.8	CPI–U All Items.
Total	100.0	

[1] Labor-related.
Note: Due to rounding, weights may not sum to total.

In the September 4, 1990 final rule, for purposes of determining the labor-related portion of the standardized amounts, we summed the percentages of the labor-related items (that is, wages and salaries, employee benefits, professional fees, business services, computer and data processing, blood services, postage, and all other labor-intensive services) in the hospital market basket. This summation resulted in a labor-related portion of the hospital market basket of 71.4 percent and nonlabor-related portion of 28.6 percent. Under sections 1886 (d)(2)(H) and (d)(3)(E) of the Act, in making payments under the prospective payment system, the Secretary estimates from time to time the proportion of payments that are labor-related. Since October 1, 1990, then, we have considered 71.4 percent of costs to be labor-related for purposes of the prospective payment system.

In connection with the rebasing of the hospital market basket, we have re-estimated the labor-related share of the standardized amounts. Based on the relative weights described in Table 2, the labor-related portion that is subject to hospital wage index adjustments (based on wages and salaries, employee benefits, professional fees, business services, computer and data processing, postage, and all other labor-intensive services) is 71.246 percent and the nonlabor-related portion is 28.754 percent. To implement this change, effective with discharges occurring on or after October 1, 1996, we are proposing to recompute the labor-related and nonlabor-related shares of the large urban and other areas' standardized amounts used to establish the prospective payment rates.

The amounts in Table 4 reflect the revised labor-related and nonlabor-related portions. Due to the Bureau of Economic Analysis' reclassification of Blood Services to Chemicals, we now allocate Blood Services to a nonlabor cost category. We note that, although there are revisions of the labor and nonlabor portions, due to both weight changes and the Blood Services category change, the labor-related portions of the rates published in Table 4 have remained essentially the same. The

labor-related portion has decreased by 0.146 percentage points.

TABLE 4.—LABOR-RELATED SHARE

Cost category	Weight
Wages and Salaries	50.244
Employee Benefits	11.146
Professional Fees	2.127
Business Services	3.823
Computer Services	1.927
Postal Services	0.272
All Other Labor Intensive	1.707
Total Labor-Related	71.246
Total Nonlabor Related	28.754

3. Selection of Price Proxies

After computing the 1992 cost weights for the rebased hospital market basket, it is necessary to select appropriate wage and price proxies to monitor the rate of increase for each expenditure category. Most of the indicators are based on Bureau of Labor Statistics (BLS) data and are grouped into one of the following BLS categories:

• Producer Price Indexes—Producer Price Indexes (PPIs) measure price changes for goods sold in other than retail markets. For example, we used the PPI for ethical drugs, rather than the Consumer Price Index (CPI) for prescription drugs. PPIs are preferable price proxies for goods that hospitals purchase as inputs in producing their outputs. The PPIs we used measure price change at the final stage of production.

• Consumer Price Indexes—Consumer Price Indexes (CPIs) measure change in the prices of final goods and services bought by the typical consumer. Because they may not represent the price faced by the producer, the consumer price indexes were used if no appropriate PPI was available, or if the expenditure was more similar to that of retail consumers in general rather than a purchase at the wholesale level. For example, the CPI for food purchased away from home was used as a proxy for contracted food services.

• Employment Cost Indexes—Employment Cost Indexes (ECIs) measure the rate of change in employee wage rates and employer costs for employee benefits per hour worked. These indexes are fixed-weight indexes and strictly measure the change in wage rates and employee benefits per hour. They are not affected by shifts in employment mix.

• Average Hourly Earnings—Average Hourly Earnings (AHEs) measure the rate of change of hourly earnings for various occupations within a given industry, and, therefore, reflect a weighted occupational mix within a particular industry. The AHE series is calculated by dividing gross payrolls by total hours and measures actual earnings rather than pure wage rates. It is a current-weight series rather than a fixed-weight index and thus reflects shifts in employment mix. An AHE rather than an ECI is used when there is no corresponding ECI category that is an appropriate measure of growth for a given labor category or when the ECI does not have sufficient length of history to be useful for our purpose.

Our proposed price proxies for the rebased prospective payment hospital market basket are shown in Table 2 above and are summarized in Appendix C to this proposed rule.

4. The HCFA Blended Compensation Index

Compensation includes the two largest categories of the rebased hospital market basket. Wages and salaries account for 50.244 percent and employee benefits account for 11.146 percent of the total weight in the prospective payment hospital market basket.

The proposed HCFA Blended Compensation Index groups hospital occupations into nine broad categories. For eight of those occupational groups, we believe that hospitals compete for labor generally with employers outside the health care sector. Accordingly, we use economy-wide employment cost indexes (ECI) as price proxies for these eight occupational groups. In the case of compensation for nurses, as well as for certain other health care technicians and professionals, the hospital labor market may be predominant. However, hospitals do compete with other industries to obtain certain skilled professional and technical staff (for example, computer programmers). Therefore, for professional and technical workers, we believe a price proxy that reflects an equal blend of internal and external compensation variables is appropriate.

Similar to the methodology used for the previous rebasing, the weights for the nine cost categories in the occupational blend index were derived from the 1992 Current Population Survey (CPS) produced by BLS. Using the CPS, private hospital workers were classified into the nine occupational categories. Private hospitals better reflect the mix of occupations used to produce acute care services for the prospective payment hospital input price index. Government hospitals were excluded because their occupational mix reflects the subset of nonacute care hospitals. Once private hospital workers were sorted by occupation into one of the nine occupational groups, weights were estimated using the share of wages and salaries for each of the nine occupations. These shares formed the basis of the weights that were used for the market basket of occupational categories.

An additional adjustment was made for contract labor costs. Rather than treat contract labor as a distinct noncompensation cost category, it was integrated into the occupational blend as a component of hospitals' compensation costs for purposes of the market basket index. Thus, contract labor is treated the same as other labor expenses. Contract labor was allocated to the professional and technical and service occupation categories. After adjusting the professional and technical and service workers' shares to account for contract labor, the weights for the nine occupational blend categories were renormalized to equal 100.00 percent. The weights and proxies for the nine cost categories of the HCFA Blended Wages and Salaries Index are shown in Table 5.

TABLE 5.—HCFA BLENDED WAGES AND SALARIES INDEX (WAGES AND SALARIES COMPONENT OF THE 1992-BASED MARKET BASKET)

Cost category	Weight	Price proxy
Professional and Technical	65.729	Equal blend of ECI for wages and salaries of civilian hospital workers and ECI for wages and salaries of professional, specialty and technical workers.
Managers and Administrators	9.554	ECI for wages and salaries for executive, administrative and managerial workers.
Sales	0.402	ECI for wages and salaries for sales workers.
Clerical Workers	12.379	ECI for wages and salaries for administrative support including clerical workers.
Craft and Kindred	1.689	ECI for wages and salaries for precision production, craft and repair workers.

TABLE 5.—HCFA BLENDED WAGES AND SALARIES INDEX (WAGES AND SALARIES COMPONENT OF THE 1992-BASED MARKET BASKET)—Continued

Cost category	Weight	Price proxy
Operatives Except Transport	0.437	ECI for wages and salaries for machine operators, assemblers and inspectors.
Transport Equipment Operatives	0.122	ECI for wages and salaries for transportation and material moving workers.
Nonfarm Laborers	0.084	ECI for wages and salaries for handlers, equipment cleaners, helpers and laborers.
Service Workers	9.606	ECI for wages and salaries for service occupations.
Total Wages and Salaries	100.000	Total Weight for Wages and Salaries is 50.2.

Note: Due to rounding, weights may not sum to total.

5. Separate Market Basket for Hospitals and Hospital Units Excluded From the Prospective Payment System

In its March 1, 1990 report, ProPAC recommended that we establish a separate market basket for hospitals and hospital units excluded from the prospective payment system. Effective with FY 1991, HCFA adopted ProPAC's recommendation to implement separate market baskets. (See the September 4, 1990 final rule (55 FR 36044).) Prospective payment and excluded hospitals tend to have different case mixes, practice patterns, and composition of inputs. The fact that these hospitals are not included under the prospective payment system in part reflects these differences.

Studies completed by HCFA, ProPAC, and the hospital industry have documented different weights for excluded hospitals and prospective payment hospitals. Table 7 compares major weights in the rebased 1992 market basket for excluded hospitals with weights in the rebased 1992 market basket for prospective payment system hospitals. Wages and salaries are 52.152 percent of total operating costs for excluded hospitals compared to 50.244 percent for prospective payment hospitals. Employee benefits are 11.569 percent for excluded hospitals compared to 11.146 percent for prospective payment hospitals. As a result, compensation costs (wages and salaries plus employee benefits) for excluded hospitals are 63.721 percent of costs compared to 61.390 percent for prospective payment hospitals. Noncompensation costs are 36.279 percent for excluded hospitals and 38.610 of costs for prospective payment hospitals.

Two significant differences in the category weights occur in Pharmaceuticals and Business Services. Pharmaceuticals represent 4.162 percent of costs for prospective payment hospitals and 3.070 percent for excluded hospitals. Business services represent 3.823 percent of costs for prospective payment hospitals and 2.337 percent for excluded hospitals. The weights for the excluded hospital market basket were derived using the same data sources and methods as for the prospective payment market basket (see Appendix C to this proposed rule).

Differences in weights between the proposed excluded hospital and prospective payment hospital market baskets do not necessarily lead to significant differences in the rate of price growth for the two market baskets. If the individual wages and prices move at the approximately same annual rate, both market baskets may have about the same price growth even though weights may differ substantially because both market baskets use the same wages and prices. Also, offsetting price increases for various cost components can result in similar composite price growth in both market baskets.

The wage and price proxies are the same for the excluded hospital and prospective payment hospital market baskets. As discussed in section IV.A.2 of this preamble, all of the cost expenditure weights for both the prospective payment and excluded hospital market baskets are subject to refinement if the U.S. Department of Commerce data are released in time to be analyzed and incorporated in the final market basket.

The excluded hospital market basket is a composite set of weights for Medicare participating psychiatric, long-term care, rehabilitation, and children's hospitals. We are proposing to use cost report data for excluded hospitals and units whose Medicare average length of stay is within 15 percent (that is, 15 percent higher or lower) of the total facility average length of stay. This is a change from the 1987-based market basket, for which data for all excluded hospitals and units were used. We believe that limiting our sample to hospitals with a Medicare average length of stay within 15 percent of the total facility average length of stay provides a more accurate reflection of the structure of costs for Medicare. We note that the proposed forecast for FY 1997 would be the same even if we had included all excluded hospitals in the calculation of weights. The forecast for both the limited and full set of excluded hospitals yields a rate of change for FY 1997 of 2.7 percent.

TABLE 6.—COMPARISON OF SIGNIFICANT WEIGHTS FOR 1992–BASED EXCLUDED HOSPITAL AND PROSPECTIVE PAYMENT HOSPITAL MARKET BASKETS

Category	Excluded hospitals	Prospective payment hospitals
Wages and Salaries	52.152	50.244
Employee Benefits	11.569	11.146
Professional Fees	2.098	2.127
Pharmaceuticals	3.070	4.162
All Other	31.111	32.321
Total	100.000	100.000

TABLE 7.—PROPOSED 1992-BASED EXCLUDED HOSPITAL OPERATING COST CATEGORIES, WEIGHTS, AND PRICE PROXIES

Expense categories	Rebased 1992 excluded hospital market basket	Price proxy
1. Compensation	63.721	
A. Wages and Salaries	52.152	HCFA Occupational Wage Index.
B. Employee Benefits	11.569	HCFA Occupational Benefits Index.
2. Professional Fees	2.098	ECI—Compensation for Professional, Specialty & Technical.
3. Utilities	2.557	
A. Fuel, Oil, and Gasoline	0.357	PPI Refined Petroleum Products.
B. Electricity	1.396	PPI Commercial Electric Power.
C. Natural Gas	0.694	PPI Commercial Natural Gas.
D. Water and Sewerage	0.110	CPI–U Water & Sewerage Maintenance.
4. Professional Liability Insurance	1.081	HCFA Professional Liability Insurance Premiums Index.
5. All Other	30.543	
A. All Other Products	23.642	
(1.) Pharmaceuticals	3.070	PPI Ethical (Prescription) Drugs.
(2.) Food	3.581	
a. Direct Purchase	2.446	PPI Processed Foods & Feeds.
b. Contract Service	1.135	CPI–U Food Away From Home.
(3.) Chemicals	3.929	PPI Industrial Chemicals.
(4.) Medical Instruments	3.238	PPI Medical Instruments & Equipment.
(5.) Photographic Supplies	0.413	PPI Photographic Supplies.
(6.) Rubber and Plastics	5.039	PPI Rubber & Plastic Products.
(7.) Paper Products	2.134	PPI Converted Paper & Paperboard Products.
(8.) Apparel	0.906	PPI Apparel.
(9.) Machinery and Equipment	0.218	PPI Machinery & Equipment.
(10.) Miscellaneous Products	1.112	PPI Finished Goods.
B. All Other Services	6.901	
(1.) Business Services	2.337	ECI—Compensation for Private Workers in Business Services.
(2.) Computer Services	1.415	AHE Computer & Data Processing Services.
(3.) Transportation Services	0.195	CPI–U Transportation.
(4.) Telephone Services	0.549	CPI–U Telephone Services.
(5.) Postage	0.282	CPI–U Postage.
(6.) All Other: Labor Intensive	1.767	ECI—Compensation for Private Service Occupations.
(7.) All Other: Nonlabor Intensive	0.356	CPI–U All Items.
Total	100.000	

Note: Due to rounding, weights may not sum to total.

Table 8, below, shows what the excluded hospital weights would be if cost data for all excluded hospitals had been used.

TABLE 8.—1992 EXCLUDED HOSPITAL OPERATING COST CATEGORIES, WEIGHTS, AND PROXIES USING DATA FROM ALL EXCLUDED HOSPITALS

Expense categories	Rebased 1992 excluded hospital market basket	Price proxy
1. Compensation	68.074	
A. Wages and Salaries	55.714	HCFA Occupational Wage Index.
B. Employee Benefits	12.360	HCFA Occupational Benefits Index.
2. Professional Fees	2.073	ECI—Compensation for Professional, Specialty & Technical.
3. Utilities	2.191	
A. Fuel, Oil, and Gasoline	0.306	PPI Refined Petroleum Products.
B. Electricity	1.196	PPI Commercial Electric Power.
C. Natural Gas	0.595	PPI Commercial Natural Gas.
D. Water and Sewerage	0.094	CPI–U Water & Sewerage Maintenance.
4. Professional Liability Insurance	1.081	HCFA Professional Liability Insurance Premiums Index.
5. All Other	26.582	
A. All Other Products	20.333	
(1.) Pharmaceuticals	2.704	PPI Ethical (Prescription) Drugs.
(2.) Food	3.069	
a. Direct Purchase	2.096	PPI Processed Foods & Feeds.
b. Contract Service	0.973	CPI–U Food Away From Home.
(3.) Chemicals	3.367	PPI Industrial Chemicals.
(4.) Medical Instruments	2.775	PPI Medical Instruments & Equipment.

TABLE 8.—1992 EXCLUDED HOSPITAL OPERATING COST CATEGORIES, WEIGHTS, AND PROXIES USING DATA FROM ALL EXCLUDED HOSPITALS—Continued

Expense categories	Rebased 1992 excluded hospital market basket	Price proxy
(5.) Photographic Supplies	0.354	PPI Photographic Supplies.
(6.) Rubber and Plastics	4.319	PPI Rubber & Plastic Products.
(7.) Paper Products	1.829	PPI Converted Paper & Paperboard Products.
(8.) Apparel	0.777	PPI Apparel.
(9.) Machinery and Equipment	0.187	PPI Machinery & Equipment.
(10.) Miscellaneous Products	0.953	PPI Finished Goods.
B. All Other Services	6.248	
(1.) Business Services	2.337	ECI—Compensation for Private Workers in Business Services.
(2.) Computer Services	1.213	AHE Computer & Data Processing Services.
(3.) Transportation Services	0.167	CPI–U Transportation.
(4.) Telephone Services	0.471	CPI–U Telephone Services.
(5.) Postage	0.242	CPI–U Postage.
(6.) All Other: Labor Intensive	1.514	ECI—Compensation for Private Service Occupations.
(7.) All Other: Nonlabor Intensive	0.305	CPI–U All Items.
Total	100.000	

The relatively small differences in weights between the proposed excluded hospital market basket data from excluded hospitals that have a Medicare length of stay within 15 percent of the total facility average length of stay and the excluded hospital market basket using data from all excluded hospitals do not lead to significant changes in the rate of price growth for these two market baskets. If all individual wages and prices move at about the same annual rate, both market baskets could have about the same price growth even if weights are somewhat different. Also, offsetting price increases for various costs components can result in the price growth being the same.

To examine the sensitivity of the change to the limited set of excluded hospitals, we developed a comparison for the period 1988–1998. Using historical data and forecasts for the market baskets, we compared limited and full sets of excluded hospitals.

TABLE 9.—A COMPARISON OF THE PROPOSED EXCLUDED HOSPITAL MARKET BASKET AND THE EXCLUDED HOSPITAL MARKET BASKET REBASED USING ALL EXCLUDED HOSPITALS, PERCENT CHANGE, 1988–1998

Federal fiscal year	Proposed excluded (+/−15%) hospital market basket—1992 base	Excluded hospital market basket using all excluded hospitals—1992 base	Difference
Historical:			
1988	4.8	4.8	0.0
1989	5.5	5.5	0.0
1990	4.5	4.6	(0.1)
1991	4.3	4.4	(0.1)
1992	3.1	3.2	(0.1)
1993	3.1	3.2	(0.1)
1994	2.6	2.7	(0.1)
1995	3.3	3.2	0.1
Forecasted:			
1996	2.6	2.6	0.0
1997	2.7	2.7	0.0
1998	2.9	2.9	0.0
Historical average:			
1988–1995	3.9	4.0	(0.1)
Forecasted average:			
1996–1998	2.7	2.7	0.0

Note that the historical average rate of growth for 1988–1995 for the proposed excluded hospital market basket including only excluded hospitals with Medicare average length of stay within 15 percent of total facility average length of stay is virtually identical to that for the excluded hospital market basket with all excluded hospitals. The rates of growth using the two methodologies are identical for FY 1996, 1997, and 1998.

B. Capital Costs

Rebasing the Capital Input Price Index

1. Background

Effective for cost reporting periods beginning on or after October 1, 1995, the Capital Input Price Index (CIPI) is used to determine the price increase associated with prospective payment hospital capital-related expenses. Capital-related expenses are defined as depreciation expenses, capital-related interest expenses, and other capital-related expenses, such as insurance and taxes. The CIPI measures the input price change of these capital-related expenses, and is included in the capital prospective payment update framework to determine a rate of increase in capital prospective payments.

Like the prospective payment hospital operating input price index, the CIPI is a fixed-weight price index. A fixed-weight price index measures how much it would cost at a later date to purchase the same mix of goods and services purchased in the base period. For the prospective payment hospital operating and capital input price indexes, the base period is selected and cost category weights are determined using available data on hospitals. Next, appropriate price proxy indexes are chosen for each cost category. Then a price proxy index level for each expenditure category is multiplied by the comparable cost category weight. The sum of these products (that is, weights multiplied by price proxy index levels) for all cost categories yields the composite index level of the market basket for a given

year. Repeating the step for other years produces a time series of composite market basket index levels. Dividing an index level by a later index level produces a rate of growth in the input price index. Since the percent change is computed for the fixed mix of total capital inputs with a 1992 base, the index is called fixed-weight.

Like the operating input price index, the CIPI measures the price changes associated with costs during a given year. In order to do so, the CIPI must differ from the operating input price index in one important aspect. The CIPI must reflect the vintage nature of capital, which is the acquisition and use of capital over time. Capital expenses in any given year are determined by the stock of capital in that year (that is, capital that remains on hand from all current and prior capital acquisitions). An index measuring capital price changes needs to reflect this vintage nature of capital. Therefore, the CIPI was developed to capture the vintage nature of capital by using a weighted-average of past capital purchase prices up to and including the current year. Using Medicare cost reports, AHA data, and Securities Data Corporation data, a vintage-weighted price index was developed to measure price increases associated with capital expenses. The most recent discussion on the CIPI and methodological background was published in the September 1, 1995 final rule (60 FR 45817). The following Federal Register documents describe development and revisions of the methodology involved with the construction of the CIPI:

September 1, 1992 (57 FR 40016), May 26, 1993 (58 FR 30448),
September 1, 1993 (58 FR 46490), May 27, 1994 (59 FR 27876),
September 1, 1994 (59 FR 45517), June 2, 1995 (60 FR 29229), and September 1, 1995 (60 FR 45815).

We periodically update the base year for the operating and capital input prices to reflect the changing composition of inputs for operating and capital expenses. Currently, both the operating input price index and the CIPI are based to FY 1987. We are proposing that the base year cost structure be updated to FY 1992, the most recent year with relatively complete data for purposes of rebasing. We explain the process of rebasing the cost structure weights for the CIPI below.

2. Rebasing the Capital Input Price Index

We are proposing to use a rebased capital input price index (CIPI) in developing the FY 1997 capital update factor for capital prospective payment rates. The new CIPI would be rebased to reflect the 1992, rather than the 1987, structure of capital costs. In developing the rebased CIPI, we reviewed hospital capital expenditure data for capital cost categories (depreciation, interest, and other). Two sets of weights had to be developed in order to compute the rebased CIPI: (1) cost category weights which identify the proportion of total hospital capital expenditures attributable to each capital expenditure category, and (2) relative vintage weights for depreciation and interest which identify the proportion of capital expenditures within a cost category that are attributable to each year over the life of capital assets in that category. Because capital expense data in the Medicare Cost Reports is not available prior to 1980 for use in computing vintage weights, the two sets of weights are measured using the best data sources available as explained below and in Appendix C to this proposed rule. The computations involved with rebasing the CIPI are explained for each of these sets of weights.

a. Capital Cost Category Weights. The capital cost category weights in Table 1 below were computed using a combination of the FY 1992 Medicare Cost Reports and 1992 AHA Annual Survey data. Fiscal Year 1992 marked the first year for expanded capital data available in the Medicare Cost Reports. After reviewing the data, we determined that much of the data had been reclassified into different expense categories. Therefore, we removed reports that appeared to have reclassified data, and matched the remaining reports to the corresponding reports in the AHA Annual Survey data set. These remaining 2724 reports were used to compute capital cost category weights and the expected life of capital, which is used in determining vintage weights for depreciation and interest.

In reviewing the data, we determined that the Medicare Cost Reports provided accurate data for depreciation and other capital expenses, but had reclassified interest data. We determined that AHA Annual Survey data more accurately reflected interest expense, based on past trends in interest rates. Therefore, we used the AHA Annual Survey interest levels along with the Medicare Cost Report levels for depreciation and other capital expenses to develop a more robust capital cost data base.

After removing depreciation, interest, and other capital expenses from total capital expenses, the remainder constitutes lease expenses. Lease expenses are not a separate cost category in the CIPI. They are distributed to the other cost categories (depreciation, interest, other), reflecting an assumption that the underlying cost structure of leases is similar to capital costs in general. We assigned 10 percent of lease expenses to the other capital expenses cost category as overhead, and the remaining lease expenses were distributed to the three cost categories based on the weights of depreciation, interest, and other capital expenses not including lease expenses. (We base this assignment of 10 percent of lease expenses to overhead on the common assumption that overhead is 10 percent of costs.)

We also used the 1992 Medicare Cost Reports to determine weights for the building and fixed equipment category and the movable equipment category. Expenses for building and fixed equipment and for movable equipment were determined using the same sample of reports as was used to compute the major cost category weights. The split between building and fixed equipment and movable equipment was also used to compute the vintage weights described below. Table 10 presents a comparison of the rebased 1992 capital cost weights and the 1987 capital cost weights.

We only used those hospital reports which we considered to have capital data that was not reclassified. Because we did not use all hospital reports, we were concerned that the hospitals used may not be representative of the universe. Therefore, we compared the distribution of costs for the hospitals used with the data re-weighted to reflect the characteristics of the total universe of hospitals. From this analysis we validated that the cost weights derived from the subset we used were representative of the cost weights for the entire universe of hospitals.

TABLE 10—COMPARISON OF 1987 AND 1992 COST CATEGORY WEIGHTS

Expense categories	FY1987	Rebased FY1992	Price proxy
Total	1.0000	1.0000	
Total depreciation	.6510	.6484	
1. Building and fixed equipment depreciation	.3054	.3009	Boeckh Institutional Construction Index—vintage weighted (22 yrs)
2. Movable equipment depreciation	.3456	.3475	PPI for Machinery and Equipment—vintage weighted (10 yrs)
Total interest	.3274	.3184	
1. Government/Non Profit Interest	.2783	.2706	Average Yield on Domestic Municipal Bonds (Bond Buyer 20 bonds)—vintage weighted (22 yrs)
2. For-Profit Interest	.0491	.0478	Average Yield on Moody's AAA Bonds—vintage weighted (22 yrs)
Other	.0216	.0332	CPI (U) for Residential Rent

Source: 1992 Medicare Cost Reports, PPS year 9; 1992 AHA Annual Survey.
Note: Due to rounding, weights may not sum to totals.

We had planned to incorporate the 1992 data from the Department of Commerce for developing capital cost category weights. However, these data were not available when we developed this proposed rule. If the data become available in time to for us to analyze it, we plan to incorporate it as a data input for the final rule.

b. Relative Vintage Weights for Prices. As we have explained in previous Federal Register documents (September 1, 1995, 60 FR 45817), the CIPI was developed to capture the vintage nature of capital; that is, because capital is acquired and consumed over time, the capital expenses in any given year are determined by past and current purchases of physical and financial capital. Therefore, a vintage-weighted CIPI was developed which used vintage weights for depreciation (physical capital) and interest (financial capital) to capture the long-term consumption of capital. These vintage weights reflect the purchase patterns of building and fixed equipment and movable equipment over time. Because depreciation and interest expenses are determined by the amount of past and current capital purchases, we use the vintage weights to compute vintage-weighted price changes associated with depreciation and interest expense, which is the purpose of the CIPI.

To compute the vintage weights for depreciation and interest expenses, we used a time series of capital purchases for building and fixed equipment and movable equipment. We found no single source that provides the best time series of capital purchases by hospitals for all of the above components of capital purchases. The Medicare Cost Reports did not have sufficient capital data to meet this need. The AHA Panel Survey provides a consistent database back to 1963. While the AHA Panel Survey data does not provide annual capital purchases, it does provide a time series of depreciation and interest expenses, which can be used to infer capital purchases over time. The process of using the AHA data to estimate a time series of capital purchases, and eventually vintage weights, is explained in detail below.

In order to estimate capital purchases from AHA data on depreciation and interest expenses, the expected life for building and fixed equipment, for movable equipment, and for debt instruments is needed. The expected life is used in the calculation of vintage weights for building and fixed equipment, movable equipment, and debt instruments as we explain below.

We used the same sample of hospitals from FY 1992 Medicare Cost Reports and the 1992 AHA Annual Survey explained above in computing cost category weights to compute the expected life of building and fixed equipment and movable equipment. (The AHA Panel Survey is a monthly survey of a sample of hospitals, while the AHA Annual Survey is a more detailed survey of all hospitals.) The expected life of any piece of equipment can be determined by dividing the historical asset cost (excluding fully depreciated assets) by the current year depreciation amount. This calculation yields the estimated useful life of an asset if depreciation continued at current year levels, assuming straight-line depreciation, which is the only depreciation method allowed under Medicare. From the FY 1992 costs reports, the expected life of building and fixed equipment was determined to be 22 years, and the expected life of movable equipment was determined to be 10 years. By comparison, the expected life using FY 1987 data was 25 years for building and fixed equipment and 10 years for movable equipment.

It was also necessary to compute the expected life of debt instruments held by hospitals. As in prior exercises, we used hospital issuances of municipal and commercial bonds from Securities Data Corporation to determine the expected life of hospital debt instruments, which is used in the estimation of vintage weights for interest expense. This data source produced a weighted average life for the two types of bonds of 22 years for FY 1992, the same expected life as was computed for the 1987-based CIPI.

An annual series of total expenses and depreciation expenses was obtained from the AHA Panel Survey. For the calculation of vintage weights, this expense data was needed back to 1963. However, the depreciation expense data in the AHA Panel survey was available only back to 1976. We noticed an increasing trend in depreciation expenses as a percentage of total expenses. We performed a regression on this percentage, and used the regression equation to estimate depreciation expenses back to 1963. We then used the fixed and movable weights derived from the FY 1992 Medicare Cost Reports to partition the AHA Panel Survey depreciation expenses into annual amounts of building and fixed depreciation and movable depreciation.

Multiplying the annual depreciation amounts by the expected life calculations from the FY 1992 Medicare cost reports, year-end asset costs for building and fixed equipment and movable equipment were determined. Then by subtracting the previous year asset costs from the current year asset costs, annual purchases of building and fixed equipment and movable equipment were estimated back to 1963. This capital purchase time series is then used to compute the vintage weights for building and fixed equipment, movable equipment, and debt instruments. Each of these sets of vintage weights is explained in detail below.

For building and fixed equipment vintage weights, the real annual capital purchase amounts for building and fixed equipment derived from the AHA Panel Survey were used. The real annual purchase amount was used to capture the actual amount of the physical acquisition, net of the effect of price inflation. This real annual purchase amount for building and fixed equipment was produced by deflating

the nominal annual purchase amount by the building and fixed equipment price proxy, the Boeckh institutional construction index. Because building and fixed equipment has an expected life of 22 years, the vintage weights for building and fixed equipment were deemed to represent the average purchase pattern of building and fixed equipment over 22-year periods. With real building and fixed equipment purchase estimates available back to 1963, nine 22-year periods could be averaged to determine the average vintage weights for building and fixed equipment. Averaging different periods produces vintage weights that are representative of average building and fixed equipment purchase patterns over time. Vintage weights for each 22-year period are calculated by dividing the real building and fixed capital purchase amount in any given year by the total amount of purchases in the 22-year period. For example, for the 22-year period of 1964–1985, the vintage weight for year 1 is calculated by dividing the real annual capital purchase amount of building and fixed equipment in 1964 into the total amount of real annual capital purchases of building and fixed equipment over the entire 1964–1985 period. This calculation is done for each year in the 22-year period, and for each of the nine 22-year periods. An average is taken of the nine 22-year periods to determine the FY 1992 average building and fixed equipment vintage weights, presented in Table 11 with the FY 1987 vintage weights.

For movable equipment vintage weights, the real annual capital purchase amounts for movable equipment derived from the AHA Panel Survey were used. The real annual purchase amount was used to capture the actual amount of the physical acquisition, net of price inflation. This real annual purchase amount for movable equipment was produced by deflating the nominal annual purchase amount by the movable equipment price proxy, the Producer Price Index for machinery and equipment. Because movable equipment has an expected life of 10 years, the vintage weights for movable equipment were deemed to represent the average purchase pattern of movable equipment over 10-year periods. With real movable equipment purchase estimates available back to 1963, 21 10-year periods could be averaged to determine the average vintage weights for movable equipment. Averaging different periods produces vintage weights which are representative of average movable equipment purchase patterns over time. Vintage weights for each 10-year period are calculated by dividing the real movable capital purchase amount for any given year by the total amount of purchases in the 10-year period. For example, for the 10-year period of 1976–1985, the vintage weight for year 1 is calculated by dividing the real annual capital purchase amount of movable equipment in 1976 into the total amount of real annual capital purchases of movable equipment over the entire 1976–1985 period. This calculation is done for each year in the 10-year period, and for each of the 21 10-year periods. The average of the 21 10-year periods is used to determine the FY 1992 average movable equipment vintage weights, presented in Table 11 with the FY 1987 vintage weights.

For interest vintage weights, the nominal annual capital purchase amounts for total equipment (building and fixed, and movable) derived from the AHA Panel Survey were used. Nominal annual purchase amounts were used to capture the value of the debt instrument. Because debt instruments have an expected life of 22 years, the vintage weights for interest were deemed to represent the average purchase pattern of total equipment over 22-year periods. With nominal total equipment purchase estimates available back to 1963, nine 22-year periods could be averaged to determine the average vintage weights for interest. Averaging different periods produces vintage weights which are representative of average capital purchase patterns over time. Vintage weights for each 22-year period are calculated by dividing the nominal total capital purchase amount for any given year by the total amount of purchases in the 22-year period. For example, for the 22-year period of 1964–1985, the vintage weight for year 1 is calculated by dividing the nominal annual capital purchase amount of total equipment in 1964 into the total amount of nominal annual capital purchases of total equipment over the entire 1964–1985 period. This calculation is done for each year in the 22-year period, and for each of the nine 22-year periods. The average of the nine 22-year periods is used to determine the FY 1992 average interest vintage weights, presented in Table 11 with the FY 1987 weights.

TABLE 11.—VINTAGE WEIGHTS FOR CAPITAL-RELATED PRICE PROXIES

Year	Building and fixed equipment		Movable equipment		Interest	
	FY1987 25 yrs	Rebased FY1992 22 yrs	FY1987 10 yrs	Rebased FY1992 10 yrs	FY1987 22 yrs	Rebased FY1992 22 yrs
1	.015	.019	.064	.069	.007	.007
2	.019	.020	.072	.075	.009	.008
3	.022	.023	.077	.083	.010	.010
4	.024	.026	.085	.091	.011	.012
5	.023	.028	.095	.097	.013	.014
6	.022	.030	.101	.103	.015	.016
7	.020	.031	.109	.109	.017	.018
8	.021	.032	.122	.115	.020	.021
9	.025	.036	.132	.124	.023	.024
10	.030	.039	.142	.133	.027	.029
11	.033	.043			.032	.035
12	.034	.047			.038	.041
13	.034	.050			.043	.047
14	.035	.052			.050	.052
15	.038	.055			.057	.059
16	.043	.059			.064	.067
17	.049	.062			.074	.074
18	.053	.065			.083	.081
19	.056	.067			.090	.088

TABLE 11.—VINTAGE WEIGHTS FOR CAPITAL-RELATED PRICE PROXIES—Continued

Year	Building and fixed equipment		Movable equipment		Interest	
	FY1987 25 yrs	Rebased FY1992 22 yrs	FY1987 10 yrs	Rebased FY1992 10 yrs	FY1987 22 yrs	Rebased FY1992 22 yrs
20	.057	.069	.....	.....	.098	.093
21	.060	.072	.....	.....	.105	.099
22	.066	.073	.....	.....	.114	.103
23	.071	.....	.....	.....	.....	.....
24	.075	.....	.....	.....	.....	.....
25	.077	.....	.....	.....	.....	.....
Total	1.000	1.000	1.000	1.000	1.000	1.000

Sources: AHA Panel Survey, 1963–1993; 1992 Medicare Cost Reports; Securities Data Corporation.

3. Selection of Price Proxies

After the 1992 capital cost category weights were computed, it was necessary to select appropriate price proxies to monitor the rate of increase for each expenditure category. Our proposed price proxies for the FY 1992 based CIPI are the same as those for the FY 1987 based CIPI. The rationale for selecting the price proxies is explained in the June 2, 1995 proposed rule (60 FR 29227) and the September 1, 1995 final rule (60 FR 45817). The proposed price proxies are presented in Table 10.

4. Forecast of the CIPI for Federal Fiscal Year 1997

DRI forecasts a 1.0 percent increase in the rebased 1992 CIPI for FY 1997, as indicated in Table 12. This is the outcome of a 2.5 percent increase in projected depreciation prices (building and fixed equipment, and movable equipment) and a 2.3 percent increase in other capital expense prices in FY 1997, partially offset by a 3.0 percent decline in vintage-weighted interest rates in FY 1997.

TABLE 12.—HCFA CAPITAL INPUT PRICE INDEX PERCENT CHANGES, TOTAL AND COMPONENTS, FISCAL YEARS 1979 TO 2000

Fiscal Year	Total	Depreciation			Interest	Other
		Total	Building and fixed equipment	Movable equipment		
Weights (FY92)	1.0000	0.6484	0.3009	0.3475	0.3184	0.0332
Price Changes						
1979	5.4	7.4	7.0	7.7	2.7	7.1
1980	6.9	8.0	7.3	8.5	5.4	8.6
1981	8.7	8.5	7.7	9.1	9.1	8.8
1982	9.2	8.5	8.0	9.0	10.2	8.0
1983	6.7	8.1	7.9	8.2	4.8	6.3
1984	6.3	7.3	7.6	7.1	4.9	5.0
1985	5.2	6.3	7.0	5.8	3.5	5.9
1986	3.7	5.7	6.4	5.1	0.7	6.2
1987	3.1	5.1	5.9	4.5	−0.1	4.5
1988	3.0	4.6	5.4	4.0	0.3	3.8
1989	2.6	4.4	5.2	3.7	−0.5	3.8
1990	2.3	4.0	4.9	3.2	−0.7	4.2
1991	2.0	3.6	4.6	2.7	−1.1	3.9
1992	1.5	3.2	4.4	2.1	−2.0	2.6
1993	1.1	2.9	4.1	1.8	−2.8	2.4
1994	1.1	2.7	3.9	1.7	−2.7	2.3
1995	1.3	2.6	3.8	1.6	−2.0	2.5
1996	0.9	2.5	3.7	1.5	−3.1	2.4
1997	1.0	2.5	3.5	1.5	−3.0	2.3
1998	1.0	2.5	3.4	1.5	−3.1	3.0
1999	1.0	2.4	3.4	1.5	−3.1	2.4
2000	1.1	2.4	3.4	1.5	−3.2	2.8

Source: DRI/McGraw-Hill HCC, 1st Qtr 1996; @USSIM/TREND25YR0296 @CISSIM/CONTROL961.
Released By: HCFA, OACT, Office of National Health Statistics.

5. Comparison of Percent Changes in the FY 1992 Based CIPI and the FY 1987 Based CIPI

Rebasing the CIPI from 1987 to 1992 decreased the percent change in the FY 1997 forecast by only 0.2 percentage points, from 1.2 to 1.0 as indicated in Table 4. The effect of rebasing is analyzed by comparing the 1992-based CIPI forecasted percent changes to the 1987-based CIPI forecasted percent changes using the same DRI forecast of component prices. As shown in Table 13, there is only a 0.2 percentage point difference between the percent changes in the 1992-based CIPI and the 1987-based CIPI using the first quarter 1996 forecast. The difference is caused by changes to: (1) cost category weights, (2) expected life, and (3) vintage weights. The changes to cost category weights coupled with the wide disparity in price changes between the different cost categories contributed to lowering the CIPI percent change in the FY 1997 forecast. This was the case with fixed depreciation, which has faster price growth than the other cost categories and now has a lower weight by nearly one-half of a percentage point because of rebasing to 1992. Also contributing to the 0.2 percentage point difference in FY 1997 forecast is the change in the expected life of building and fixed equipment and the change in the vintage weights for all three components: building and fixed equipment, movable equipment, and interest. The shorter expected life (22 years in 1992 versus 25 years in 1987) of building and fixed equipment slightly decreased the FY 1997 forecast CIPI percent change because years with higher price increases were not included as they had been before. The change in vintage weights also tended to decrease the FY 1997 CIPI percent change because vintage weights in all cases changed to be spread more evenly over the life of the asset, decreasing the weight of more recent years and increasing the weight of past years. In the years around FY 1997, prices for depreciation and interest are projected to increase slightly faster than prices in earlier years.

TABLE 13.—COMPARISON OF 1987 AND 1992 BASED CAPITAL INPUT PRICE INDEX USING THE SAME DRI FORECAST, PERCENT CHANGE, 1979–1997

Federal fiscal year	CIPI	
	1987	Rebased 1992
1979	5.6	5.4
1980	7.1	6.9
1981	8.8	8.7
1982	9.3	9.2
1983	6.7	6.7
1984	6.3	6.3
1985	5.1	5.2
1986	3.7	3.7
1987	3.1	3.1
1988	3.0	3.0
1989	2.7	2.6
1990	2.4	2.3
1991	2.1	2.0
1992	1.7	1.5
1993	1.3	1.1
1994	1.3	1.1
1995	1.5	1.3
1996	1.2	0.9
1997	1.2	1.0

Source: DRI/McGraw-Hill HCC, 1st Qtr 1996; @USSIM/TREND25YR0296 @CISSIM/CONTROL961.

Released by: HCFA, OACT, Office of National Health Statistics.

6. Comparison of Percent Changes in the FY 1997 CIPI Forecast in the September 1, 1995 Federal Register and the current FY 1997 CIPI Forecast

The previously published CIPI forecast for FY 1997 of 1.7 percent has been revised to 1.0 percent in this proposed rule. As explained above in section IV.B.5, 0.2 percentage points of the decline was the result of rebasing the CIPI from 1987 to 1992. The remaining 0.5 percentage point difference in FY 1997 between the 1992-based CIPI and the 1987-based CIPI previously published is the result of revised projections by DRI. Since making a forecast in the second quarter of 1995 for the September 1, 1995 Federal Register, DRI has revised their projections of price changes downward for every cost category in the CIPI. This revised projection accounts for 0.5 of the 0.7 difference between the 1992-based CIPI percent changes and the 1987-based CIPI percent changes previously published.

V. Other Decisions and Proposed Changes to the Prospective Payment System for Inpatient Operating Costs

A. Sole Community Hospital Criteria (§ 412.92)

Under the prospective payment system, special payment protections are provided to hospitals that, by reason of factors such as isolated location, weather conditions, travel conditions, or absence of other hospitals, are the sole source of hospital inpatient services reasonably available to Medicare beneficiaries. The criteria a hospital must meet to be classified as a sole community hospital (SCH) as well as the special payment adjustments available are set forth in the regulations at § 412.92.

One of the ways in which a hospital can qualify for sole community status is to be located between 25 and 35 miles from other like hospitals and prove that no more than 25 percent of residents who become inpatients or no more than 25 percent of the Medicare beneficiaries who become inpatients in the hospital's ''service area'' are admitted to other like hospitals located within a 35-mile radius of the hospital (or its service area, if larger).

In the rulemaking process for FY 1989, we addressed the criteria for qualification as a sole community hospital. ProPAC had recommended that we issue guidelines before the beginning of FY 1989 to promote greater uniformity in the criteria applied by regional offices to designate sole community hospitals. In the final rule published on September 30, 1988, we stated: ''A hospital may delineate its service area by identifying the zip codes of all its inpatients for the cost reporting period ending before the date it applies for SCH status. The lowest number of zip codes accounting for at least 75 percent of its inpatients would then constitute its service area.'' (53 FR 35810–11).

In March 1990, we issued a revised manual which inadvertently reflected policy prior to October 1, 1988; specifically, section 2810 A.2.c of the Medicare Provider Reimbursement Manual, Part 1 (HCFA Pub. 15–1) stated, ''A hospital may define its service area as the lowest number of contiguous zip codes from which the hospital draws at least 75 percent of its inpatients.'' (Emphasis added.) This revision does not accurately reflect the definition of ''service area'' that we set forth in the FY 1989 final rule in response to ProPAC's recommendation that we address the criteria for SCH status. It has come to our attention that, accordingly, some hospitals have raised questions about the definition of service area. In this proposed rule, we are clarifying that, consistent with the language in the September 30, 1988 final rule, our definition of ''service area'' for purposes of determining SCH status does not require contiguous zip code areas. We have applied this definition since October 1, 1988 (the effective date of the September 30, 1988 final rule). The

current manual inadvertently reflects previous policy, and does not reflect our current policy as set forth in the Federal Register and applied since October 1, 1988. We intend to revise the current manual accordingly at our earliest opportunity.

B. Rural Referral Centers (§ 412.96)

Under the authority of section 1886(d)(5)(C)(i) of the Act, § 412.96 sets forth the criteria a hospital must meet in order to receive special treatment under the prospective payment system as a rural referral center. For discharges occurring before October 1, 1994, rural referral centers received the benefit of payment based on the other urban rather than the rural standardized amount. As of that date, the other urban and rural standardized amounts are the same. However, rural referral centers continue to receive special treatment under both the disproportionate share hospital payment adjustment and the criteria for geographic reclassification.

One of the criteria under which a rural hospital may qualify as a referral center is to have 275 or more beds available for use. A rural hospital that does not meet the bed size criterion can qualify as a rural referral center if the hospital meets two mandatory criteria (number of discharges and case-mix index) and at least one of three optional criteria (medical staff, source of inpatients, or volume of referrals). With respect to the two mandatory criteria, a hospital may be classified as a rural referral center if its—

- Case-mix index is at least equal to the lower of the median case-mix index for urban hospitals in its census region, excluding hospitals with approved teaching programs, or the median case-mix index for all urban hospitals nationally; and
- Number of discharges is at least 5,000 discharges per year or, if fewer, the median number of discharges for urban hospitals in the census region in which the hospital is located. (The number of discharges criterion for an osteopathic hospital is at least 3,000 discharges per year.)

1. Case-Mix Index

Section 412.96(c)(1) provides that HCFA will establish updated national and regional case-mix index values in each year's annual notice of prospective payment rates for purposes of determining rural referral center status. In determining the proposed national and regional case-mix index values, we follow the same methodology we used in the November 24, 1986 final rule, as set forth in regulations at § 412.96(c)(1)(ii). Therefore, the proposed national case-mix index value includes all urban hospitals nationwide, and the proposed regional values are the median values of urban hospitals within each census region, excluding those with approved teaching programs (that is, those hospitals receiving indirect medical education payments as provided in § 412.105).

These values are based on discharges occurring during FY 1995 (October 1, 1994 through September 30, 1995) and include bills posted to HCFA's records through December 1995. Therefore, in addition to meeting other criteria, we are proposing that to qualify for initial rural referral center status or to meet the triennial review standards for cost reporting periods beginning on or after October 1, 1996, a hospital's case-mix index value for FY 1995 would have to be at least—

- 1.3332; or
- Equal to the median case-mix index value for urban hospitals (excluding hospitals with approved teaching programs as identified in § 412.105) calculated by HCFA for the census region in which the hospital is located.

The median case-mix values by region are set forth in the table below:

Region	Case-mix index value
1. New England (CT, ME, MA, NH, RI, VT)	1.2292
2. Middle Atlantic (PA, NJ, NY)	1.2224
3. South Atlantic (DE, DC, FL, GA, MD, NC, SC, VA, WV)	1.3375
4. East North Central (IL, IN, MI, OH, WI)	1.2450
5. East South Central (AL, KY, MS, TN)	1.2911
6. West North Central (IA, KS, MN, MO, NE, ND, SD)	1.2178
7. West South Central (AR, LA, OK, TX)	1.3080
8. Mountain (AZ, CO, ID, MT, NV, NM, UT, WY)	1.3284
9. Pacific (AK, CA, HI, OR, WA)	1.3333

The above numbers will be revised in the final rule to the extent required to reflect the updated MedPAR file, which will contain data from additional bills received for discharges through September 30, 1995.

For the benefit of hospitals seeking to qualify as referral centers or those wishing to know how their case-mix index value compares to the criteria, we are publishing each hospital's FY 1995 case-mix index value in Table 3C in section V of the Addendum to this proposed rule. In keeping with our policy on discharges, these case-mix index values are computed based on all Medicare patient discharges subject to DRG-based payment.

2. Discharges

Section 412.96(c)(2)(i) provides that HCFA will set forth the national and regional numbers of discharges in each year's annual notice of prospective payment rates for purposes of determining referral center status. As specified in section 1886(d)(5)(C)(ii) of the Act, the national standard is set at 5,000 discharges. However, we are proposing to update the regional standards. The proposed regional standards are based on discharges for urban hospitals' cost reporting periods that began during FY 1994 (that is, October 1, 1993 through September 30, 1994). That is the latest year for which we have complete discharge data available.

Therefore, in addition to meeting other criteria, we are proposing that to qualify for initial rural referral center status or to meet the triennial review standards for cost reporting periods beginning on or after October 1, 1996, the number of discharges a hospital must have for its cost reporting period that began during FY 1995 would have to be at least—

- 5,000; or
- Equal to the median number of discharges for urban hospitals in the census region in which the hospital is located, as indicated in the table below.

Region	Number of discharges.
1. New England (CT, ME, MA, NH, RI, VT)	6812
2. Middle Atlantic (PA, NJ, NY)	9067
3. South Atlantic (DE, DC, FL, GA, MD, NC, SC, VA, WV)	6972
4. East North Central (IL, IN, MI, OH, WI)	6958
5. East South Central (AL, KY, MS, TN)	5007
6. West North Central (IA, KS, MN, MO, NE, ND, SD)	4216
7. West South Central (AR, LA, OK, TX)	4002
8. Mountain (AZ, CO, ID, MT, NV, NM, UT, WY)	6992
9. Pacific (AK, CA, HI, OR, WA)	5669

We reiterate that, to qualify for rural referral center status for cost reporting periods beginning on or after October 1, 1996, an osteopathic hospital's number of discharges for its cost reporting period that began during FY 1995 would have to be at least 3,000.

3. Retention of Referral Center Status

Section 412.96(f) states that each hospital receiving the referral center adjustment is reviewed every 3 years to

determine if the hospital continues to meet the criteria for referral center status. To retain status as a referral center, a hospital must meet the criteria for classification as a referral center specified in § 412.96 (b)(1) or (b)(2) or (c) for 2 of the last 3 years, or for the current year. A hospital may meet any one of the three sets of criteria for individual years during the 3-year period or the current year. For example, a hospital may meet the two mandatory requirements in § 412.96(c)(1) (case-mix index) and (c)(2) (number of discharges) and the optional criterion in paragraph (c)(3) (medical staff) during the first year. During the second or third year, the hospital may meet the criteria under § 412.96(b)(1) (rural location and appropriate bed size).

A hospital must meet all of the criteria within any one of these three sections of the regulations in order to meet the retention requirement for a given year. That is, it will have to meet all of the criteria of § 412.96(b)(1) or § 412.96(b)(2) or § 412.96(c). For example, if a hospital meets the case-mix index standards in § 412.96(c)(1) in years 1 and 3 and the number of discharge standards in § 412.96(c)(2) in years 2 and 3, it will not meet the retention criteria. All of the standards would have to be met in the same year.

In accordance with § 412.96(f)(2), the review process is limited to the hospital's compliance during the last 3 years. Thus, if a hospital meets the criteria in effect for at least 2 of the last 3 years or if it meets the criteria in effect for the current year (that is, the criteria for FY 1997 outlined above in this section of the preamble), it will retain its status for another 3 years. We have constructed the following chart and example to aid hospitals that qualify as referral centers under the criteria in § 412.96(c) in projecting whether they will retain their status as a referral center.

Under § 412.96(f), to qualify for a 3-year extension effective with cost reporting periods beginning in FY 1997, a hospital must meet the criteria in § 412.96(c) for FY 1997 or it must meet the criteria for 2 of the last 3 years as follows:

For the cost reporting period beginning during FY	Use hospital's case-mix index for FY	Use the discharges for the hospital's cost reporting period beginning during FY	Use numerical standards as published in the FEDERAL REGISTER on
1996	1994	1994	September 1, 1995.
1995	1993	1993	September 1, 1994.
1994	1992	1992	September 1, 1993.

Example: A hospital with a cost reporting period beginning July 1 qualified as a referral center effective July 1, 1994. The hospital has fewer than 275 beds. Its 3-year status as a referral center is protected through June 30, 1997 (the end of its cost reporting period beginning July 1, 1996). To determine if the hospital should retain its status as a referral center for an additional 3-year period, we will review its compliance with the applicable criteria for its cost reporting periods beginning July 1, 1994, July 1, 1995, and July 1, 1996. The hospital must meet the criteria in effect either for its cost reporting period beginning July 1, 1997, or for two out of the three past periods. For example, to be found to have met the criteria at § 412.96(c) for its cost reporting period beginning July 1, 1995, the hospital's case-mix index value during FY 1993 must have equaled or exceeded the lower of the national or the appropriate regional standard as published in the September 1, 1994 final rule with comment period. The hospital's total number of discharges during its cost reporting year beginning July 1, 1993, must have equaled or exceeded 5,000 or the regional standard as published in the September 1, 1994 final rule with comment period.

For those hospitals that seek to retain referral center status by meeting the criteria of § 412.96(b)(1) (i) and (ii) (that is, rural location and at least 275 beds), we will look at the number of beds shown for indirect medical education purposes (as defined at § 412.105(b)) on the hospital's cost report for the appropriate year. We will consider only full cost reporting periods when determining a hospital's status under § 412.96(b)(1)(ii). This definition varies from the number of beds criterion used to determine a hospital's initial status as a referral center because we believe it is important for a hospital to demonstrate that it has maintained at least 275 beds throughout its entire cost reporting period, not just for a particular portion of the year.

C. Disproportionate Share Adjustment (§ 412.106)

Section 1886(d)(5)(F) of the Act provides for additional payments for hospitals that serve a disproportionate share of low income patients. The disproportionate share adjustment, which was added to the prospective payment system by section 9105 of the Consolidated Omnibus Budget Reconciliation Act of 1985 (Public Law 99–272), was intended to address the higher Medicare costs associated with treating a large number of low-income patients. Under this provision, patients who are eligible for Medicaid and Supplemental Security Income (SSI) benefits were used as a proxy measure of the proportion of low-income patients.

A hospital's disproportionate share adjustment is determined by calculating the sum of two patient percentages (Medicare Part A/Supplemental Security Income (SSI) covered days to total Medicare Part A covered days, and Medicaid but not Medicare Part A covered days to total inpatient hospital days). Based on the location and size of the hospital, a formula determines if the hospital's patient percentage qualifies the hospital for an adjustment and how much that adjustment will be.

With respect to the Medicare-SSI calculation, hospitals have expressed dissatisfaction with these proxy measures, and have challenged HCFA's implementation of them in recent litigation. Since SSI beneficiary information is confidential, hospitals do not have access to lists of patients who are eligible for both Medicare Part A and SSI benefits. Hospitals are increasingly frustrated by their inability to monitor these data.

With respect to the Medicaid fraction, hospitals have complained that, because of Medicaid coverage restrictions, Medicaid covered days may not be a consistent measure of indigent care across States. Medicaid reforms under consideration by the President and Congress may further interfere with the utility of Medicaid covered days as a measure of the proportion of low-income patients.

Because of these concerns, we have been examining alternative measures of indigent care. Some of the measures we have explored using are estimates of patient income in a hospital's service area, hospital levels of bad debt, and proportion of emergency room admissions in a hospital. Because of data and other limitations, however, we have yet to find an alternative that appears promising as a replacement to

the present measure. We are, therefore, soliciting comments from the industry on better and more direct measures of indigent care than the present measure that relies on SSI and Medicaid data. Our preference would be to use data that are already available. We would, however, be open to considering measures that require new data collection if we were convinced that the result would be beneficial to hospitals and HCFA. We note that since HCFA is bound by the current statutory provisions, we cannot revise the disproportionate share adjustment without legislative action.

We note that ProPAC is also concerned with these issues. In its March 1, 1996 report, ProPAC recommended that the structure of the disproportionate share adjustment be reviewed to make certain that available funds are distributed equitably among the hospitals most in need of assistance. (Recommendation 18.) The Commission believes that Medicaid utilization has never been an optimal measure of service to low-income patients and is also concerned with the impact of possible reform in the structure of Medicaid. Thus, ProPAC recommends that a comprehensive review of the disproportionate share adjustment be undertaken, including assessment of the objectives of this payment and defining the population and scope of care to be covered. Alternative measures of low-income patient care could then be considered, including any data collection necessary. As discussed above, we agree with ProPAC that new measures should be explored. We believe that this is a first step in reforming the payment formula for the disproportionate share adjustment. We also recognize that the development of a better measure of the services hospitals provide to indigent patients may require the collection of new data.

In addition, ProPAC is concerned about the potential impact of reductions in the disproportionate share payments. (Recommendation 17.) The Commission believes that hospitals that treat a large number of the uninsured could be particularly vulnerable because of recent changes in the health care environment. ProPAC cautions against large reductions in disproportionate share payments that would threaten the continued ability of many hospitals to serve populations who depend on them for access to care. We note that the President's FY 1997 budget does not include any reduction in payment for disproportionate share hospitals.

D. Direct Graduate Medical Education (§ 413.86)

1. Initial Residency Period Limitations

We are updating the Initial Residency Period Limitations for direct graduate medical education (GME), originally published in the Federal Register on September 29, 1989 (54 FR 40286). The regulations in § 413.86(g)(1) state that, ''[e]ffective July 1, 1995, an initial residency period is defined as the minimum number of years required for board eligibility.''

The update reflects the following:

- Effective July 1, 1995, section 1886(h)(5)(F) of the Act, as amended by Public Law 103–66, defines an initial residency period as the minimum number of years required for initial board eligibility. Previously, this period had been defined as minimum number of years ''plus one.'' The prior listing had included the additional year, not to exceed five years.
- Changes in curriculum requirements regarding the number of years needed for board eligibility for previously approved programs.
- Addition of newly approved graduate medical education programs.

INITIAL RESIDENCY PERIOD LIMITATIONS

Residency type	Initial Residency Period Limitation (No. of years)
Allopathy	
ANESTHESIOLOGY	4
Critical Care Medicine	4
Pain Management	4
COLON AND RECTAL SURGERY	5
DERMATOLOGY	4
Dermatopathology	4
Clinical & Laboratory Dermatological Immunology	4
EMERGENCY MEDICINE	3/4
Sports Medicine	3
FAMILY PRACTICE	3
Geriatric Medicine	5
Sports Medicine	3
INTERNAL MEDICINE	3
Adolescent Medicine	3
Cardiovascular Disease	3
Clinical Cardiac Electrophysiology	3
Clinic & Laboratory Immunology	3
Critical Care Medicine	3
Endocrinology, Diabetes, and Metabolism	3
Gastroenterology	3
Geriatric Medicine	5
Hematology	3
Hematology and Oncology	3
Infectious Disease	3
Medical Oncology	3
Nephrology	3
Pulmonary Disease	3
Pulmonary Disease and Critical Care Medicine	3
Rheumatology	3
Sports Medicine	3
MEDICAL GENETICS	4

INITIAL RESIDENCY PERIOD LIMITATIONS—Continued

Residency type	Initial Residency Period Limitation (No. of years)
NEUROLOGICAL SURGERY	5
Pediatric Neurological Surgery	5
NEUROLOGY	4
Child Neurology	4
Clinical Neurophysiology	4
NUCLEAR MEDICINE	3
OBSTETRICS AND GYNECOLOGY	4
Critical Care Medicine	4
Gynecological Oncology	4
Maternal and Fetal Medicine	4
Reproductive Endocrinology	4
OPHTHALMOLOGY	4
ORTHOPAEDIC SURGERY	5
Adult Reconstructive Orthopaedics	5
Foot and Ankle Orthopaedics	5
Hand Surgery	5
Musculoskeletal Oncology	5
Pediatric Orthopaedics	5
Spinal Cord Injury	5
Sports Medicine	5
OTOLARYNGOLOGY	5
Neurotology/Otolaryngology	5
Pediatric Otolaryngology	5
PATHOLOGY, ANATOMIC AND CLINICAL	4
Blood Banking/Transfusion Medicine	4
Chemical Pathology	4
Cytopathology	4
Dermatopathology	4
Forensic Pathology	4
Hematology	4
Immunopathology	4
Medical Microbiology	4
Neuropathology	4
Pediatric Pathology	4
PEDIATRICS	3
Adolescent Medicine	3
Clinical and Laboratory Immunology	3
Neonatal-Perinatal Medicine	3
Pediatric Cardiology	3
Pediatric Critical Care Medicine	3
Pediatric Emergency Medicine	3
Pediatric Endocrinology	3
Pediatric Gastroenterology	3
Pediatric Hematology/Oncology	3
Pediatric Infectious Disease	3
Pediatric Nephrology	3
Pediatric Opthamology	3
Pediatric Pulmonology	3
Pediatric Rheumatology	3
Pediatric Sports Medicine	3
PHYSICAL MEDICINE AND REHABILITATION	4
PLASTIC SURGERY	5
Hand Surgery	5
PREVENTIVE MEDICINE	3
Aerospace Medicine	3
Medical Toxicology	3
Occupational Medicine	3
Public Health & General Preventive Medicine	3
PSYCHIATRY	4
Addiction Medicine	4
Child & Adolescent Psychiatry	4
Forensic Psychiatry	4
Geriatric Psychiatry	4
RADIOLOGY, DIAGNOSTIC	4
Neuroradiology	4
Nuclear Radiology	4
Pediatric Radiology	4
Vascular and Interventional Radiology	4
Radiation Oncology	4

INITIAL RESIDENCY PERIOD LIMITATIONS—Continued

Residency type	Initial Residency Period Limitation (No. of years)
SURGERY, GENERAL	5
Critical Care Medicine	5
Hand Surgery	5
Pediatric Surgery	5
Thoracic Surgery	5
Vascular Surgery	5
UROLOGY	5
Pediatric Urology	5
Osteopathy	
ANESTHESIOLOGY	4
Critical Care Medicine	4
DERMATOLOGY	4
Dermatopathology	4
MOHS Micrographic Surgery	4
EMERGENCY MEDICINE	4
Sports Medicine	4
FAMILY PRACTICE	3
Adolescent and Young Adult Medicine	3
Geriatrics	5
Sports Medicine	3
INTERNAL MEDICINE	4
Clinical Allergy and Immunology	4
Cardiology	4
Endocrinology	4
Gastroenterology	4
Hematology	4
Infectious Diseases	4
Nephrology	4
Oncology	4
Pulmonary Diseases	4
Rheumatology	4
Clinical Cardiac Electrophysiology	4
Critical Care Medicine	4
Geriatrics	6
Sports Medicine	4
NUCLEAR MEDICINE	4
In-Vivo and In-Vitro Nuclear Medicine	4
Nuclear Cardiology	4
Nuclear Imaging and Therapy	4
NEUROLOGY	4
Child Neurology	4
PSYCHIATRY	4
Child Psychiatry	4
OBSTETRICS/GYNECOLOGY	5
Maternal and Fetal Medicine	5
Gynecological Oncology	5
Reproductive Endocrinology	5
FACIAL PLASTIC SURGERY	5
OPHTHALMOLOGY	4
OTORHINO/FACIAL PLASTIC SURGERY	5
OTORHINOLARYNGOLOGY	5
ORTHOPEDIC SURGERY	5
PATHOLOGY, ANATOMIC	4
PATHOLOGY, ANATOMIC/LABORATORY MEDICINE	5
PATHOLOGY, LABORATORY MEDICINE	4
Forensic Pathology	5
Blood Banking/Transfusion Medicine	5
Chemical Pathology	5
Cytopathology	5
Dermatopathology	5
Hematology	5
Immunopathology	5
Medical Microbiology	5
Neuropathology	5
PEDIATRICS	3
Adolescent and Young Adult Medicine	3
Neonatal Medicine	3
Pediatric Allergy/Immunology	3
Pediatric Cardiology	3

INITIAL RESIDENCY PERIOD LIMITATIONS—Continued

Residency type	Initial Residency Period Limitation (No. of years)
Pediatric Hematology/Oncology	3
Pediatric Infectious Diseases	3
Pediatric Intensive Care	3
Pediatric Nephrology	3
Pediatric Pulmonology	3
Pediatric Sports Medicine	3
PREVENTATIVE MEDICINE	4
PROCTOLOGY	3
RADIATION ONCOLOGY	4
RADIOLOGY, DIAGNOSTIC	5
Angiography and Interventional Radiology	5
Diagnostic Ultrasound	5
Neuroradiology	5
Nuclear Radiology	5
Radiological Imaging	5
Pediatric Radiology	5
REHABILITATION MEDICINE	4
Sports Medicine	4
GENERAL SURGERY	5
NEUROSURGERY	5
PLASTIC AND RECONSTRUCTIVE SURGERY	5
THORACIC CARDIOVASCULAR SURGERY	5
UROLOGICAL SURGERY	5
GENERAL VASCULAR SURGERY	5
CRITICAL CARE SURGERY	5
OSTEOPATHIC MANIPULATIVE MEDICINE	3
Podiatry	
ROTATING PODIATRIC RESIDENCY (PRIMARY CARE)	2
PODIATRIC ORTHOPEDIC RESIDENCY	2
PODIATRIC SURGICAL RESIDENCY	2
Dentistry	
DENTAL PUBLIC HEALTH	1
ENDODONTICS	2
ORAL PATHOLOGY	3
ORAL AND MAXILLOFACIAL SURGERY	4
ORTHODONTICS	2
PEDIATRIC DENTISTRY	2
PERIODONTICS	3
PROSTHODONTICS	3
PROSTHODONTICS/MAXILLOFACIAL	3
GENERAL DENTISTRY	1
ADVANCED GENERAL DENTISTRY	2
Allopathy Combined Programs*	
FAMILY PRACTICE(3) AND PSYCHIATRY(4)	4
INTERNAL MEDICINE(3) & EMERGENCY MEDICINE(3)	3
INTERNAL MEDICINE(3) & FAMILY PRACTICE(3)	3
INTERNAL MEDICINE(3) & NEUROLOGY(4)	4
INTERNAL MEDICINE(3) & PEDIATRICS(3)	3
INTERNAL MED(3) & PHYS MED & REHABILITATION(4)	4
INTERNAL MEDICINE(3) & PREVENTIVE MEDICINE(3)	3
INTERNAL MEDICINE(3) & PSYCHIATRY(4)	4
NEUROLOGY(4) & PHYS MEDICINE AND REHAB(4)	4
PEDIATRICS(3) & EMERGENCY MEDICINE(3)	3
PEDIATRICS(3) & PHYSICAL MEDICINE AND REHAB(4)	4
PEDIATRICS(3)/PSYCHIATRY(4)/CHILD & ADOL PSYCH(4)	4
PSYCHIATRY(4) AND NEUROLOGY(4)	4

* For residents participating in combined programs, Medicare limits the initial residency period to the time required for individual certification in the longer of the two programs.

2. Combined Residency Programs

While updating the listing of the Initial Residency Period Limitations for GME, we noted many new programs were combined specialty residency programs. The combined programs run concurrently for a period of time that is longer than the required time for certification in either specialty, but shorter than would be required if the programs were taken sequentially. Residents completing these programs are eligible for board certification in both specialties.

We use the Internal Medicine and Pediatrics combined program as an example: Taken individually, Internal Medicine is a 3-year program and Pediatrics is also a 3-year program. However, taken as a combined program, Internal Medicine and Pediatrics is a 4-

year program, with certification in both specialties.

Currently, we are aware of 13 combined programs, including Internal Medicine/Pediatrics, Pediatrics/Emergency Medicine, Family Practice/Psychiatry, and Neurology/Physical Medicine and Rehabilitation.

Due to the increasing prevalence of combined residency programs since our September 29, 1989 final rule, we propose to clarify how the definition of initial residency period applies in such cases. While the combined programs may have advantages from an educational standpoint, the statutory limitation on payment for GME still applies. In the initial legislation for a per resident payment to hospitals for GME, Congress limited Medicare's liability for those payments to residents in their initial residency period plus one year. The plus-one-year provision allowed for payment for an additional year as a full FTE for residents who continued on in a second approved program after completing their initial certification. However, regardless of the number of additional years the second program required for certification, at most only the first year could be paid as a full FTE. All subsequent years are paid at a 0.5 FTE rate. When Congress revised section 1886(h) of the Act to remove the plus-one-year provision, Congress further restricted payment to allow payment as a full FTE for the first residency program only. All years of a subsequent program are now limited to the 0.5 FTE rate. Congress clearly wanted to further limit Medicare's payment obligations. Accordingly, we believe that the initial residency period limitation is designed to allow full Medicare payment only for the period required to train in one specialty.

For residents enrolled in combined programs, we are therefore proposing to define the initial residency period as the time required for individual certification in the longer of the two programs. Continuing to use Internal Medicine and Pediatrics as an example, we would define the initial residency for Internal Medicine and Pediatrics as 3 years. The remaining year of the combined program would be treated as 0.5 FTE, in accordance with the regulations at § 413.86(g)(3).

E. Distribution of an ''Important Message from Medicare'' (§ 489.27)

Under § 489.27 of our provider agreement regulations, all hospitals that participate in Medicare (including those not paid under the prospective payment system) must agree to furnish each Medicare beneficiary with a notice, at or about the time of admission, that explains the patient's discharge rights. This statement, entitled ''An Important Message from Medicare,'' advises a beneficiary of his or her rights to be fully informed about decisions affecting Medicare coverage or payment and about his or her appeal rights in response to any hospital's notice to the effect that Medicare will no longer cover the patient's care. The ''Important Message'' also advises the patient of what to do when he or she receives such a hospital statement and how to elicit more information.

In November 1993, the Medicare Technical Advisory Group (M–TAG) established the Beneficiary Protection and Documentation Issues Task Force. The task force consists of HCFA staff as well as representatives from health care industry organizations, beneficiary advocate groups, fiscal intermediaries, and peer review organizations (PROs). The task force was charged with reviewing various issues that impact beneficiaries and the health care community, including how to improve the effectiveness of ''An Important Message from Medicare.''

We are proposing to adopt a recommendation of this task force that would respond to numerous requests for clarification on the timing of the written notice of discharge rights that must be given to hospital inpatients. As noted above, existing § 489.27 specifies that a hospital must distribute the statement ''at or about the time of admission.'' We understand that for monitoring purposes some PROs have interpreted this requirement to mean ''within 24 hours preceding or following the admission.'' However, we agree with the task force's determination that the PRO's interpretation is unnecessarily narrow. We believe that during the first 24 hours of a patient's admission, the hospital is primarily concerned with ensuring appropriate treatment of the patient's illness or injury. Therefore, we are proposing to change § 489.27 to specify that the hospital must provide timely notice during the course of the hospital stay.

For purposes of this requirement, we would consider the course of the hospital stay to begin when the hospital provides the individual with a package of information regarding scheduled preadmission testing and registration for a planned hospital admission. This would give hospitals more flexibility in meeting the requirement, as well as encourage the distribution of the ''Important Message'' at a time when the beneficiary is better able to receive and more likely to understand its contents. In complying with the requirement to provide timely notice during the course of the patient's hospital stay, the hospital must give the patient the ''Important Message'' far enough in advance of the hospital's written notice regarding continued stay to provide the beneficiary time to appeal the hospital's decision. Finally, ''timely notice'' would also include adherence to any State requirements on the provision of patient rights notices.

The current version of the ''Important Message'' has been in use since 1988. As part of our effort to improve communication with Medicare beneficiaries, we will continue to evaluate the effectiveness of the ''Important Message'' and welcome suggestions for its improvement.

VI. Changes and Clarifications to the Prospective Payment System for Capital-Related Costs

A. Consistent Cost Finding During the Capital Transition Period (§ 412.302(d))

Section 412.302(d) of the regulations requires that, during the transition period to full prospective payment for capital-related costs, a hospital must follow consistent cost-finding methods for classifying and allocating capital-related costs. Specifically, the regulation requires that unless there is a change of ownership, a hospital must continue the same cost-finding methods for old capital costs, including its practices for direct assignment of costs and its cost-allocation bases, that were in effect in the hospital's last cost-reporting period before becoming subject to payment under the capital prospective payment transition system. A hospital may request a change in its cost-finding methods for new capital, provided that the request is made in a timely fashion as provided in the regulation, the hospital provides justification for the change, and the intermediary determines that the justification is reasonable.

It is important to note that, while the regulation does permit changes in cost-finding methods for new capital, such changes are only permitted where they do not involve any changes in cost-finding for old capital. In practice, this means that if a hospital claims any old capital, the intermediary cannot permit a change in any of the allocation bases on Worksheet B–1 of the cost report from the bases used in the last cost reporting period prior to the capital prospective payment system transition period. Otherwise, the consistency rule governing old capital cost-finding would be violated.

As we discussed in the preamble to the August 30, 1991 final rule for the capital prospective payment system (56

FR 43396), our primary reason for establishing this consistency rule was to prevent hospitals from using changes in cost-finding methodologies to shift costs to areas where payment continues to be made on a reasonable cost basis. Allowing changes in cost-finding methodologies to accomplish such cost-shifting would obviously defeat the purpose of adopting a prospective payment system.

In response to concerns expressed by the hospital industry about the costs of the recordkeeping required under the cost-reporting rules, HCFA has developed new cost reporting instructions, which will be released later this year, that permit hospitals to voluntarily adopt a simplified cost allocation methodology. This methodology reduces the number of statistical bases that a hospital is required to maintain. Under the new instructions for HCFA Form 2552–96 (the cost report instructions for FY 1996 cost reporting periods), hospitals may request the simplified cost allocation methodology. However, hospitals that elect this methodology must employ a prescribed list of statistical bases with no deviations. Hospitals may not pick and choose among the prescribed statistics for the combination that is most advantageous. Furthermore, a hospital that elects the simplified methodology must continue to use it for at least 3 years, unless a change of ownership occurs. We expect that, while election of the simplified method will always result in reduced recordkeeping costs for the hospital, it will also result frequently in reduced Medicare payment for the hospital. In fact, the instructions for HCFA Form 2552–96 will caution hospitals to compare the reduced costs of program compliance with the reduced costs of the simplified recordkeeping before electing the simplified method.

We believe this proposal to permit election of the simplified cost allocation methodology, as provided in the instructions for HCFA Form 2552–96, reasonably reconciles concerns about recordkeeping costs with the requirement of consistent cost-finding during the transition. Specifically, we propose to add a new paragraph (d)(4) to § 412.302, to provide that, hospitals may elect to adopt the simplified cost allocation methodology, as will be provided in the instructions for HCFA Form 2552–96.

B. Possible Adjustments to the Capital Prospective Payment System Federal Rate and Hospital-Specific Rates (§§ 412.308(b) and 412.328)

In the proposed and final rules for FY 1996 (60 FR 29238–29239 and 60 FR 45830–45831), we discussed the effects of the expiration of the statutory budget neutrality provision on rates and aggregate payments under the capital prospective payment system. Under the budget neutrality provision, we set the capital-prospective payment system rates during FY 1992 through FY 1995 so that payments were projected to equal 90 percent of Medicare payments that would have been made on a reasonable cost basis for each fiscal year. As a result of the provision's expiration in FY 1996, the capital-prospective payment system rates and payments under the transition system increased significantly. The FY 1996 Federal rate is 22.59 percent higher than the FY 1995 Federal rate. We now estimate that aggregate capital payments will increase 27.7 percent in FY 1996 relative to FY 1995, and that payments will exceed capital costs by 9.6 percent in FY 1996. Under current law and regulations, we estimate that aggregate payments will further increase by 7.3 percent in FY 1997, for an increase of 37.0 percent over 2 years. We do not believe that such large increases in capital payments are necessary or warranted.

During the FY 1996 rulemaking process, we solicited comments on possible revisions to the capital prospective payment rates that would have moderated these substantial increases in payments. At that time, we noted that section 1886(g) of the Act gives the Secretary broad discretion in the determination of the appropriate level of rates and payments. However, we decided not to implement any reduction to the capital rates at that time, in the expectation that Congress would be considering revisions to rates and payments under the capital prospective payment system within more comprehensive legislation dealing with Medicare and the Federal budget.

In its March 1, 1996 Report to Congress, the Prospective Payment Assessment Commission (ProPAC) observed that the base capital rate was reduced during the first 4 years of the transition to full prospective payment for capital to meet the statutory budget neutrality requirement. In the light of the large increase in rates and payments as a result of that provision's expiration in FY 1996, ProPAC recommends (Recommendation 11) that the capital payment rates should be set by developing an appropriate base payment rate and applying an annual update. The Commission notes that there are several ways to determine an appropriate base capital payment rate.

We agree with ProPAC that the large increase in rates and payments caused by the expiration of the statutory budget neutrality provision raises an issue concerning the proper level for future rates and payments. We also agree that there are several possible approaches to establishing an appropriate level for the rates. We considered a range of options in developing this proposed rule. For example, we considered proposing to freeze the inflation updates for the rates in FY 1997, on the grounds that such an update was unnecessary and unwarranted in light of the large increase in the rates for FY 1996. Alternatively, we considered proposing actual reductions in the base rates. For example, we considered proposing to implement the provision contained in the Administration's budget plan. The Administration's FY 1997 budget includes a provision to reduce the base Federal and hospital-specific rates by 15.7 percent. Such a reduction would build the budget neutrality adjustment for FY 1995 (0.8432, or –15.68 percent) permanently into the base rates, effectively using the FY 1995 base payment rate as the base for future years. The actual payment rates for future years would then be determined by applying the analytical update framework that we adopted in the final rule for FY 1996 (60 FR 45815–45829). We also considered proposing to implement a part of the Administration's proposal, that is, to reduce the standard Federal rate by 7.38 percent and the hospital-specific rates by 9.48 percent. The rationale for each of these options to reduce the base rate derives from an analysis of current data compared to data on which the rate was originally based.

Under § 412.308, HCFA determined the standard Federal rate, which is used to determine the Federal rate for each fiscal year, on the basis of an estimate of the FY 1992 national average Medicare capital cost per discharge. The FY 1992 national average Medicare capital cost per discharge was estimated by updating the FY 1989 national average Medicare capital cost per discharge by the estimated increase in Medicare inpatient capital cost per discharge. As we discussed in the preamble to the August 30, 1991 capital prospective payment system final rule (56 FR 43366–43384), HCFA used the July 1991 update of HCRIS data to estimate an FY 1989 national average Medicare cost per case of $527.22.

HCFA then updated that amount to FY 1992 by using an actuarial projection of a 31.3 percent increase in Medicare capital cost per discharge from FY 1989 to FY 1992. The standard Federal rate was thus based on an estimated FY 1992 national average Medicare capital cost per discharge of $692.24 (before the application of a transfer adjustment and a payment parameter adjustment).

Section 13501(a)(3) of Public Law 103–66 amended section 1886(g)(1)(A) of the Social Security Act to require that, for discharges occurring after September 30, 1993, the unadjusted standard Federal rate be reduced by 7.4 percent. As we discussed in the September 1, 1993 final rule for FY 1994 (58 FR 46316ff.), the purpose of that reduction was to reflect revised inflation estimates, as of May 1993, for the increases in Medicare capital costs per discharge during FY 1989 through FY 1992. By that time, the estimate of increases in Medicare inpatient capital costs per discharge from FY 1989 through FY 1992 had declined from 31.3 percent to 21.57 percent. The 7.4 percent reduction to the Federal rate was calculated to account for these revised estimates (1.2157/1.313=0.926, a 7.4 percent decrease). That provision of Public Law 103–66 also required that, for cost reporting periods beginning on or after October 1, 1993, the Secretary redetermine which hospital payment methodology should be applied under the capital prospective payment system transition rules to take into account the 7.4 percent reduction to the Federal rate.

As a result of the reduction required by Public Law 103–66, the standard Federal rate is now based on an estimated FY 1992 Medicare inpatient capital cost per case of $641.01 ($692.24×0.926). At the time of the Public Law 103–66 reduction to the Federal rate, actual cost report data on the FY 1992 Medicare capital cost per discharge were not yet available. The reduction was based on cost report data for FY 1990 and FY 1991, and a revised projection of the rate of increase in Medicare capital costs per discharge during FY 1992. We now have extensive cost report data for FY 1992. The March 1996 update of HCRIS data shows an audit-adjusted FY 1992 Medicare inpatient capital cost per discharge of $593.72, or an additional 7.38 percent lower than the estimate on which the Federal rate is currently based.

Under § 412.328, HCFA determined the FY 1992 hospital-specific rate by using a process similar to the process for determining the FY 1992 Federal rate. The intermediary determined each hospital's allowable Medicare inpatient capital cost per discharge for the hospital's latest cost reporting period ending on or before December 31, 1990. The intermediary then updated each hospital's FY 1990 allowable Medicare capital cost per discharge to FY 1992 based on the estimated increase in Medicare inpatient capital cost per case. As with the Federal rate updates, current data demonstrate that the estimates used to update the hospital specific rates from FY 1990 to FY 1992 were overstated. Specifically, the hospital-specific rates are 9.48 percent higher than they would have been if the rates of increase had reflected actual data. Thus, revising the Federal and the hospital-specific rates only for the known overestimations in the actual costs on which rates were based would call for reductions of 7.38 percent and 9.48 percent, respectively.

The proposal in the Administration's budget to reduce the rates 15.7 percent reflects the preceding factors, as well as analysis of capital cost increases before the implementation of the prospective payment system for capital-related costs. That analysis suggests that the Federal and hospital-specific rates may reflect levels of cost in excess of what can be accounted for by the rate of inflation in capital input prices, quality enhancing intensity increases, and real case mix growth. Economic theory suggests that an industry with a guaranteed return on capital (such as the hospital industry prior to prospective payment for capital-related costs) would have a tendency to be overly capitalized relative to more competitive industries. This is because the incentive for firms in such an industry is to compete on the basis of more capital-intensive production processes than firms in other industries. As a result, capital costs per case, and therefore base year prospective capital rates, may be higher than would have been consistent with capital acquisition policy in more efficiency-oriented markets.

To examine this issue, in our June 2, 1995 proposed rule (60 FR 29237) we analyzed the change in actual Medicare capital cost per case for FY 1986 through FY 1992 in relation to the change in the capital input price index (which accounts for change in the input prices for capital-related costs), and the other adjustment factors that we were then proposing to include in the framework. (The other adjustment factors are the increase in real case mix and the increase in intensity due to quality-enhancing technological change and within-DRG complexity.) We found rates of increase in actual spending per case that exceeded the rate of increase attributable to inflation in capital input prices, quality-enhancing intensity increases, and real case-mix growth. Our last analysis (60 FR 45826–45829) suggested that the FY 1992 capital costs used to set the Federal and hospital-specific capital rates exceeded by approximately 28 percent the level that could be accounted for by known factors.

We seriously considered proposing one of these options—reducing the standard (base) Federal rate either 7.38 percent to address overstated inflation estimates or 15.7 percent, as reflected in the Administration's budget proposal—in this proposed rule. We believe that either of these options is well justified on the basis of current data and analysis. As ProPAC has observed, hospitals do not seem to have been adversely affected by the level of the rates during the years in which the statutory budget neutrality provision was in effect. However, we still believe that Congress and the Administration may be able to reach an agreement on budget issues, including Medicare savings, in the near future. Therefore, as discussed in section III of the Addendum to this proposed rule, at this time we are proposing to update the capital rates in accordance with the capital update framework, without implementing any of the reductions discussed above. Our hope is that the legislative process will produce an appropriate adjustment to the rate level in time for implementation in the final rule. In the event that no such agreement is reached before the final rule for FY 1997, we may implement one of the above-described options at that time. We invite public comment on the merits of these options, and on the advisability of implementing one or the other in the final rule, in the absence of legislative action. We will reconsider all the options in the light of public comments.

C. Possible Adjustment to Capital Prospective Payment System Minimum Payment Levels

Section 412.348(b) of the regulations provides that, during the capital prospective payment system transition period, any hospital may receive an additional payment under an exceptions process if its total inpatient capital-related payments under its payment methodology (i.e., fully prospective or hold-harmless) are less than a minimum percentage of its allowable Medicare inpatient capital-related costs. The minimum payment levels are established by class of hospitals under § 412.348(c). The minimum payment

levels for portions of cost reporting periods occurring in FY 1996 are:

- Sole community hospitals (located in either an urban or rural area), 90 percent;
- Urban hospitals with at least 100 beds and a disproportionate share patient percentage of at least 20.2 percent and urban hospitals with at least 100 beds that qualify for disproportionate share payments under § 412.106(c)(2), 80 percent; and,
- All other hospitals, 70 percent.

Under § 412.348(d), the amount of the exceptions payment is determined by comparing the cumulative payments made to the hospital under the capital prospective payment system to the cumulative minimum payment levels applicable to the hospital for each cost reporting period subject to that system. Any amount by which the hospital's cumulative payments for previous cost reporting periods exceed its cumulative minimum payment is deducted from the additional payment that would otherwise be payable for a cost reporting period.

Section 412.348(h) further provides that total estimated exceptions payments under the exceptions process may not exceed 10 percent of the total estimated capital prospective payments (exclusive of hold-harmless payments for old capital) for the same fiscal year. In the final rule implementing the prospective payment system for capital-related costs we stated that the minimum payment levels in subsequent transition years would be revised, if necessary, to keep the projected percentage of payments under the exceptions process at no more than 10 percent of capital prospective payments.

In section III of the Addendum to this proposed rule, we discuss the factors and adjustments used to develop the FY 1997 Federal and hospital-specific rates. In particular, we discuss the FY 1997 exceptions payment reduction factor. This factor adjusts the annual payment rates for the estimated amount of additional payments for exceptions in FY 1997. In this proposed rule, we estimate that exceptions will equal 6.07 percent of aggregate payments based on the Federal rate and the hospital-specific rate. We will develop a new estimate of the level of exceptions payments in FY 1997, and revise the exceptions payment adjustment factor accordingly, on the basis of the data that becomes available to us in time for developing the final rule for FY 1997. While it is not necessary at this time to propose reductions in the minimum payment levels, it is possible that it will be necessary to implement adjustments to the minimum payment levels in the final rule. Our current projections show that it will almost certainly be necessary to adjust the minimum payment levels for FY 1998. We are therefore providing public notification that adjustments to the minimum payment levels are possible in the final rule, and almost certain for FY 1998.

When it does become necessary to adjust the minimum payment levels in accordance with § 412.348(h), our current intent is to adjust each of the existing levels (i.e., 90 percent for sole community hospitals, 80 percent for large urban DSH hospitals, and 70 percent for all other hospitals) by 5 percentage point increments until estimated exceptions payments are within the 10 percent limit. For example, we would set minimum payment levels at 85 percent for sole community hospitals, 75 percent for large urban DSH hospitals, and 65 percent for all other hospitals, provided that aggregate exceptions payments at those minimum payment levels were projected to be no more than 10 percent of total rate-based payments. If aggregate exceptions payments at those minimum payment levels still exceeded 10 percent of total rate-based payments, we would continue to reduce the minimum payment levels by 5 percentage point increments each until the requirement of § 412.348(h) was satisfied. We are providing notification of our current thinking on this issue in order to allow opportunity for public comment on the appropriate method for adjusting the minimum payment levels. We invite public comment on this matter, and will consider those comments fully whenever it becomes necessary to adjust the minimum payment levels in accordance with § 412.348(h).

VII. Proposed Changes for Hospitals and Units Excluded From the Prospective Payment Systems

Application of Ceiling in Calculating Payment for Hospital Inpatient Operating Costs (§ 413.40 (d) and (g))

Section 1886(b)(1)(B) of the Act provides for an additional payment to a hospital excluded from the prospective payment system when the hospital's reasonable operating costs exceed its target amount. The additional payment is based on the lesser of 50 percent of the amount by which the operating costs exceed the target amount, or 10 percent of the target amount. The Medicare statute further provides that this comparison is made ''after any exceptions or adjustments are made to such target amount for any cost reporting period.'' The regulations, at 42 CFR § 413.40(d)(3), state that the total payment to the hospital for inpatient operating costs (including the additional payment described above) is based on the lesser of the following: the ''ceiling'' (target amount multiplied by the number of Medicare discharges) plus 50 percent of the allowable net inpatient operating costs in excess of the ceiling, or 110 percent of the ceiling. However, the regulations do not explicitly include the additional statutory requirement regarding the effect of exceptions or adjustments.

It is our understanding that there are questions about the calculation of the additional payment under the regulations, which require comparison of two amounts: the ''ceiling'' plus 50 percent of the difference between allowable costs and the ceiling, and 110 percent of the ''ceiling.'' Specifically, where a hospital has received an adjustment to the target amount under § 413.40(g), there has been confusion as to whether the ''ceiling'' used for purposes of calculating the additional payment under § 413.40(d) is the unadjusted ceiling (the amount determined without consideration of any adjustments granted to the hospital) or the adjusted ceiling.

We believe that the amount of the additional payment should be determined using the adjusted ceiling when hospitals receive adjustments to the ceiling. That is, the calculation of the amounts compared—50 percent of the allowable net inpatient operating costs in excess of the ceiling, or 10 percent of the ceiling—should reflect the adjusted target amount (and adjusted ceiling). To address any confusion about these issues, we propose to revise § 413.40(d)(3) to specifically indicate that calculation of payments for hospital inpatient operating costs under that provision reflects the adjusted ceiling amount (the amount determined after an adjustment under § 413.40(g)). This would apply to all adjustments, including adjustments based on a longer average length of stay in the hospital's rate year as compared to the base year and adjustments for increased routine services.

We note that an adjusted ceiling is not used to adjust permanently the hospital's target amount or ceiling on the hospital's cost report. Instead, it is used only for purposes of calculating payments for the year the adjustment is granted. We also note that, depending on the specifics of the data in a particular case, use of an adjusted ceiling can result in either an increase or decrease in the additional payment to a hospital relative to use of an unadjusted ceiling. If the additional payment to a hospital is 50 percent of

the allowable net inpatient operating costs in excess of the ceiling, the additional payment would be lower using an adjusted ceiling (as under proposed § 413.40(d)(3)) than an unadjusted ceiling. This would occur because an adjusted ceiling reduces the difference between the hospital's costs and the ceiling. However, if the additional payment to the hospital is 10 percent of the ceiling, the additional payment would be higher using an adjusted ceiling than an unadjusted ceiling.

VIII. ProPAC Recommendations

We have reviewed the March 1, 1996 report submitted by ProPAC to Congress and have given its recommendations careful consideration in conjunction with the proposals set forth in this document. Recommendations 10 and 12, concerning the update factors for inpatient operating costs, and the update factor for hospitals excluded from the prospective payment system and distinct-part units, are discussed in Appendix F to this proposed rule. Recommendation 11, on the setting of capital payment rates, is discussed in section VI of this proposed rule. Recommendations 17 and 18, concerning disproportionate share hospitals, are discussed in section V of this proposed rule. The remaining recommendations are discussed below.

A. Slowing the Rise in Medicare Spending (Recommendation 1)

Recommendation: The Commission supports the efforts of the Congress and the President to reduce the growth in Medicare expenditures. Over time, spending for services furnished to Medicare enrollees should increase at rates comparable to those in a cost- and quality-conscious private sector.

Response: We agree with ProPAC about the importance of slowing the growth in Medicare spending. We support ProPAC's assertion that the experience in the private sector with market forces that encourage cost containment represents a useful factor in considering appropriate growth in Medicare. We also agree with those factors upon which ProPAC urges this comparison: spending growth on a per-person basis and recognizing the health care needs of an aged and disabled Medicare population. We caution, however, that while it may be appropriate to compare growth service by service, aggregate comparisons would not be meaningful due to differences in the mix of services.

Medicare and private health insurance provide a different array of services. Medicare covers more long-term care services, such as home health visits and skilled nursing facility (SNF) stays, than private insurance. Although their share of total Medicare spending is small, SNF and home health services are growing more quickly than other services within Medicare, and therefore spending for these services has been growing at a much faster rate than for other services. Data from 1992 and 1993 indicate that payments increased for SNF and home health services by 40.6 percent and 35.2 percent, respectively, whereas the growth in physician and hospital payments were only 4.5 percent and 8.3 percent, respectively. In order for Medicare and private health insurance to grow, in aggregate, at the same rate, spending for hospital and physician services would have to be growing more slowly in Medicare than in private health insurance to offset differences in long-term care growth. Due to these differences in mix of services, meaningful comparisons between Medicare and the private sector can only be made on a service-by-service basis.

B. The Failsafe Budget Mechanism (Recommendation 2)

Recommendation: Any failsafe budget mechanism should include a more effective risk adjustment factor to ensure payment equity between the Medicare capitation and traditional fee-for-service programs. In addition, changes in inflation that differ substantially from Congressional Budget Office (CBO) forecasts could require modifications to the Medicare benefit budget over time. Revisions to the proposed fee-for-service sector budget allocations could also be needed as medical practices change.

Response: We believe that using a failsafe budget mechanism (that is, an arbitrary cap on spending) to achieve targeted spending levels would be bad public policy. A failsafe mechanism would fundamentally change the nature of the Medicare program by breaking the link between benefits and payments. To meet the cap, benefits might have to be reduced, beneficiaries might have to pay more, and payments to providers might have to be reduced, all of which would impede access. A failsafe mechanism would encourage cost shifting to beneficiaries and other payers in order to achieve the targeted goal in government spending.

These arbitrary reductions in payments would make government an unreliable business partner. As Medicare moves toward a more market-oriented approach to setting payments, arbitrary reductions imposed by the government, after providers have negotiated in good faith, would sour relations and threaten the market pricing process.

The failsafe mechanism is a substitute for policy choices to achieve the desired level of spending. This arbitrary Medicare budget cap could potentially have adverse effects on the Medicare program.

We note that, while ProPAC recommends using a more effective risk adjustment factor to ensure payment equity between Medicare capitated and fee-for-service programs, no adequate case-mix measure currently exists that could serve this purpose.

C. Expanding Medicare's Capitation Program (Recommendation 3)

Recommendation: The Commission supports reforming the Medicare capitation program to control spending while expanding beneficiary choice.

Response: HCFA agrees with this recommendation and has specifically developed legislation to allow for Preferred Provider Organizations (PPOs) and Provider Sponsored Organizations (PSOs) to contract with the Medicare program. Furthermore, in October 1995, HCFA issued guidelines that notified HMOS that they were permitted to develop Point of Service (POS) Programs, which allow beneficiaries to go out of network for services. HCFA is currently conducting the Choices Demonstration, through which it is soliciting applications for the above types of provider arrangements.

D. Setting and Updating the Capitation Rates (Recommendation 4)

Recommendation: Geographic variation in the capitation rates and the volatility of the rates from year to year should be reduced. The Secretary should develop and test alternative payment methods that would allow the payment rates to reflect changes in local market conditions.

Response: We agree that geographic variations in HCFA's payment rates should be reduced. Some of the current legislative proposals would reduce the degree of variation over time.

We have been looking at ways to reduce these variations. Several demonstrations that should provide information needed to develop alternative payment methods are either currently being run or in the process of getting started. We have developed and are conducting several research and demonstration projects to review additional risk adjustors, which would modify current payment rates to reflect the health status of the members of managed care organizations. Another project would pay, from a separate pool of funds being shared by several

organizations in an area, for enrollees who have high Medicare costs. Also, HCFA is in the process of starting another project that would incorporate the payment principles associated with competitive bidding.

E. Improving Risk Adjustment Methods (Recommendation 5)

Recommendation: The risk adjustment methods used to set Medicare capitation payments should better reflect variation in the likely use of services. Even as research on the development of new methods continues, the Secretary should implement interim improvements as soon as possible.

Response: We plan to test health status risk adjusters, such as Diagnostic Cost Groups or Ambulatory Care Groups, as part of the Choices Demonstration. Furthermore, in this demonstration, we will test reinsurance and partial capitation arrangements. We are also considering demonstrations which use health status measures as part of the Adjusted Community Rate Determination, as well as part of the payment formula.

F. Medical Savings Accounts (MSAs) (Recommendation 6)

Recommendation: The Congress' high deductible/MSA option would provide an additional choice for Medicare enrollees. However, ProPAC is concerned that the current Medicare risk adjustment method is not sufficient to protect the program from adverse selection and resulting excess spending. The likelihood that rates would better reflect risk would be enhanced if Medicare enrollees were required to remain in the MSA option at least for several years.

Response: As ProPAC states, the Congressional Budget Office estimated that the MSA option would cost the Medicare program $4.6 billion over 7 years, in part because of the current state-of-the-art in risk adjustment methods (discussed in recommendation 5, above). The CBO estimate of the cost of the MSA option is consistent with the cost estimates of other reputable organizations. We fail to see the rationale for including an option that provides no new benefits but is expected to result in increased costs, particularly at a time when the public and Congress are concerned about the long-term financial viability of the Medicare program.

G. The Medicare Plus Fee-for-Service Option (Recommendation 7)

Recommendation: Enrollees choosing the fee-for-service option under the proposed Medicare Plus program could be responsible for substantially higher fees than what their plans would pay. The Secretary should monitor the impact of this option on beneficiary liability and on possible reductions in physician and other provider participation in traditional Medicare.

Response: We agree with ProPAC that beneficiaries could be responsible for substantially higher fees. We also agree that, as suggested in this recommendation, allowing physicians and other providers to elect to serve Medicare beneficiaries through private fee-for-service plans that place no limits on extra-billing amounts may well result in (1) increases in beneficiary liability and (2) reductions in physicians and other providers participating in traditional Medicare. Further, as the payment methods contained in pending legislation described in H.R. 2491 are structured, the payment increases for MedicarePlus plans, relative to those in fee-for-service Medicare, mean that MedicarePlus plans would be able to pay physicians and other providers more than fee-for-service Medicare. These higher payments would create additional incentives for physicians and other providers to cease participation in traditional Medicare. Finally, while managed care plans potentially provide value added because their organizational structure facilitates coordination of care, it is not clear what, if any, value is added by creating a private fee-for-service plan option, under which the private plans receive higher payments relative to fee-for-service Medicare and physicians and providers are permitted to charge unlimited extra-billing amounts.

H. Information for Beneficiary Health Plan Choices (Recommendation 8)

Recommendation: Medicare should make available to beneficiaries information about the performance of plans and local providers. The Secretary should identify the information beneficiaries need to make appropriate choices and develop innovative ways to improve access to it.

Response: Current HCFA initiatives to improve beneficiary information about health insurance options, which are summarized below, are consistent with ProPAC's recommendation.

Development of Prototype Materials and Strategies

We are currently engaged in two projects that will develop prototype beneficiary information strategies related to health insurance options.

The first project, which focuses mostly on managed care issues, is examining through Medicare and Medicaid beneficiary focus groups, the types of information and dissemination media that beneficiaries would find most useful in selecting health insurance plans. Based on this information, and case studies, the project will produce and test a range of prototype beneficiary information materials, including beneficiary health plan comparison booklets and charts, and informational videos. Draft prototype materials (for Medicare, pre-Medicare and Medicaid beneficiaries) are nearing completion and are scheduled for beneficiary testing in Spring 1996.

The second project will design beneficiary information and education materials and dissemination strategies to support the Medicare Open Enrollment/Competitive Pricing demonstration. This project will develop printed materials that explain the experimental open enrollment process; printed general informational materials on Medicare health insurance options; and booklets outlining the specific Medicare fee-for-service and managed care options available to beneficiaries in their area. A plan comparison chart template, which would include information on specific benefits and premiums, will also be developed, as will other information and educational approaches (including educational seminars, public service announcements (PSAs), informational videos, and a toll-free counseling phone line, all sponsored by HCFA). In addition, a dissemination strategy for HCFA and its partners in the demonstration sites will be developed (for example, Insurance Counseling and Assistance (ICA) programs and beneficiary advocacy groups).

Draft materials and strategies were tested on Medicare beneficiaries in April 1996. Final products should be available for adaptation to specific demonstration sites by Summer 1996.

Medicare Program Activities

We have currently outlined a strategy to produce and disseminate a managed care plan comparison chart to Medicare beneficiaries, initially through the HCFA Regional Offices and HCFA-sponsored ICA programs. We will use comparison chart prototypes developed (under both of the projects discussed above) as models for the comparison chart. Prototypes will be available by Spring 1996. We plan to begin dissemination of the basic comparability charts in 1996.

We may also choose to adapt some of the prototype materials for application to the Medicare program, depending on feedback and evaluations from

beneficiaries in the Open Enrollment Demonstration. These new materials could ultimately supplement or replace current materials, such as the Medicare Handbook. New prototype materials could also be provided and adapted individually by the State ICA programs. We have contributed recommendations during the development of these projects and will continue to do so.

Many of the Regional Offices have developed area specific informational materials related to Medicare managed care. The Regional Offices typically use these materials to assist in their responsibilities as the local HCFA contact for beneficiaries.

Related Major Initiatives

While current activities have centered on efforts to provide better information on health insurance options (such as focusing on comparisons of benefits, premiums, and locations), the next major steps in improving information and educational strategies will likely be in the area of quality or performance indicators.

The prototypes discussed above will include templates for eventual dissemination of quality/performance indicators for health plans. In addition, strategies for introducing the concept of indicators to Medicare and Medicaid beneficiaries will be produced. One project, short Medicare and Medicaid focused video tapes describing quality indicators using a ''grocery shopping'' analogy, has already been completed.

A final version of a set of Medicaid-specific National Committee on Quality Assurance (NCQA) Health Plan Employer Data and Information Set (HEDIS) quality indicators is nearly completed. We are currently sponsoring the revision (with NCQA) of HEDIS version 3.0 to include Medicare-specific measures. Once both Medicare- and Medicaid-specific measures are available, HCFA will have available the basic tools necessary to report comparative quality indicators to beneficiaries. A specific dissemination strategy will then be determined.

We are currently in the developmental stages of a proposed plan-specific Medicare beneficiary satisfaction survey. When completed, we would have comparative satisfaction information on all Medicare managed care plans, which could then be disseminated to beneficiaries as a companion to plan benefit/premium comparison charts.

Based on these initiatives, HCFA should be well prepared to expand and improve both the level and types of health insurance information resources available to Medicare beneficiaries.

I. Health Plan Accountability (Recommendation 9)

Recommendation: Medicare must hold health plans accountable for the appropriate use of Medicare funds. In addition, standards must be developed and enforced to ensure that Medicare beneficiaries will receive services of appropriate quality.

Response: We agree with these recommendations and have several plans for implementing them. First, we are working with the National Committee for Quality Assurance to develop HEDIS 3.0 for the Medicare program. Second, we plan to conduct beneficiary satisfaction surveys for a significant sample of beneficiaries from each health plan participating in the Medicare HMO program. Third, we are working with the Foundation of Accountability to develop condition-specific outcome measures. Finally, we are working with Peer Review Organizations to develop several condition-specific outcome measures that will be risk adjusted.

J. Broadening Financial Support to Teaching Hospitals (Recommendation 13)

Recommendation: Explicit financial support for graduate medical education activities should not be limited to the Medicare program. Mechanisms to broaden financial support for teaching-related activities in hospitals and other locations should be developed.

Response: The Commission is concerned that Medicare is the only payer that provides explicit financial support for teaching activities. Even though private payers provide implicit support through higher prices for patient care services, funding is unrelated to the amount of actual teaching activity.

While we would agree that all payers should contribute their fair share toward physician training and particularly for the patient care services that are provided in the course of this training, we wish to emphasize that Medicare's support for graduate medical education is limited only to Medicare's share of the total cost of graduate medical education. That is, although we believe the current level of the indirect medical education adjustment is higher than necessary to compensate for the indirect costs associated with residents' involvement in patient care, it is set at a level that at one time was thought to equal those costs. Furthermore, because this adjustment is made only for Medicare prospective payment system discharges, it is inherently only associated with Medicare's share of the indirect costs of graduate medical education. In addition, the direct graduate medical education payment is calculated based on Medicare's inpatient utilization rate, thereby ensuring that it, too, reflects only Medicare's share of direct graduate medical education. In that vein, we would support a mechanism to broaden support for physician training that did not result in Medicare contributing more than its fair share, relative to the Medicare utilization rate.

We note also that some Medicaid programs explicitly pay hospitals for the indirect and direct costs of graduate medical education similar to Medicare. In addition, some States (for example, New York, through its Prospective Hospital Reimbursement Methodology) provide explicit support for teaching hospitals through private payers. Nevertheless, we join ProPAC in calling for more uniform support across all payers.

We would note that although the President's health care reform bill attempted to involve private insurers in directly supporting medical education, we do not currently have a proposal to broaden support for teaching hospitals beyond that currently provided by Medicare. We have, however, proposed to broaden financial support for teaching hospitals by changing the way Medicare funds medical education through its managed care programs. Currently, Medicare payments to HMOs are based on the average cost of providing services to Medicare patients in the fee for service part of Medicare. These payments to HMOs include Medicare's costs for medical education. The President's FY 1997 budget would revise Medicare's payments to HMOs so as not to include the portion associated with medical education and paying these funds directly to teaching hospitals and to managed care plans with teaching programs. This change would benefit teaching hospitals, as well as more appropriately target Medicare funds designated for medical education.

K. Medicare Payments for Graduate Medical Education Costs (Recommendation 14)

Recommendation: ProPAC supports changes in Medicare teaching payments that would encourage an appropriate distribution of residents across specialties and discourage inappropriate growth in the total number of residents.

Response: The Commission states that both the proposals of Congress and the President's budgets would move Medicare direct graduate medical education payments in the direction of

encouraging appropriate distribution of residents across specialties and discourage inappropriate growth in the total number of residents.

The Administration is very concerned with the issue of Medicare payments to hospitals for graduate medical education. Consistent with numerous reports that the nation has an excess of specialty physicians, and that the growth of managed care is increasing the demand for primary care physicians relative to other specialties, the focus of the President's graduate medical education proposal is to encourage greater hospital participation in primary care residencies and less in specialty residencies. In addition, a significant amount of training of residents in primary care is more appropriately done in non-hospital settings. Accordingly, the President's budget includes a cap on the total number of residents and on the number of nonprimary care residents for whom Medicare will make graduate medical education payments. We would also encourage ambulatory training by including residents who rotate to non-hospital settings in the hospital's FTE count for IME purposes. We would further encourage ambulatory training by providing direct medical education payments to facilities that are not hospitals (for example, federally qualified health centers) for residents, when the residents' salaries are not paid by hospitals.

The Administration has also proposed to create a Commission on Medical Education and Workforce Priorities within HHS to develop and recommend policies to address the preservation of academic health centers' research and educational capacity and the supply of the future health care workforce. This commission would also make recommendations regarding the most effective allocation of training resources to ensure that the numbers and competencies of health care professionals are responsive to national needs.

L. Medicare Indirect Medical Education Payments (Recommendation 15)

Recommendation: The Medicare indirect medical education adjustment should be reduced from its current 7.7 percent level to 7.0 percent.

Response: As we've said in response to similar ProPAC recommendations in previous years, we agree with ProPAC that the current level of payment for the indirect costs of medical education is too high. The President's FY 1997 budget would reduce the adjustment over 3 years to a final level of 6.0 percent effective for FY 1999. In addition, residents working in nonhospital settings could be counted in a hospital's resident count for indirect medical education purposes if the hospital incurs all, or substantially all, of the costs for the training program in that setting. Finally, the President's budget would cap the number of residents that could be included in the count, with an exception provided for primary care residents and those in the specialties of obstetrics or gynecology.

The Commission also supported the provision in the President's FY 1996 budget that would apply the direct graduate medical education resident count and weighting rules to the indirect medical education count. However, ProPAC recommended proceeding with caution as additional analysis would be needed to examine the effect of this policy on individual teaching hospitals. We note that this provision is not contained in the FY 1997 budget proposal. Therefore, residents would continue to be counted for IME as long as they are enrolled in an approved program.

M. Distributing Additional Teaching-Related Payments (Recommendation 16)

Recommendation: Funds that provide broader financial support for graduate medical education should be distributed in a way that corresponds to the additional costs incurred by teaching facilities. Providers that treat enrollees in capitation plans should receive teaching-related payments for those patients as well as for the other patients they serve.

Response: This recommendation is related to Congress' proposal to create new trust funds to provide broader support for educational activities. Congress would create new trust funds that include accounts for general direct medical education, general indirect medical education, and a Medicare Plus Incentive Account financed by new appropriations. This funding would be in addition to payments currently being made by Medicare for direct and indirect medical education. The Commission is concerned that the new funding would be distributed based on previous Medicare payment levels even though general revenues will fund the newly established trust funds. With regard to the Medicare Plus Incentive Account, ProPAC is concerned that payments should give Medicare's managed care participants an incentive to use teaching hospitals and pay providers appropriately for serving patients in capitation plans.

Like the Commission, we are concerned about appropriating general revenues to finance medical education, particularly given our concern that the indirect medical education adjustment already overcompensates hospitals and Medicare already pays its share of costs of direct medical education. The President's original proposal was to create an all payer fund to finance graduate medical education. However, this proposal was made in the context of overall health care reform. We continue to remain concerned that medical education should be supported to a greater extent by payers other than Medicare but have reservations about financing of medical education with additional Federal money.

As we explained above in Recommendation 13, under the President's FY 1997 budget, we would revise payments made through our managed care programs to ensure that teaching programs are supported more appropriately by existing Medicare resources designated for medical education. Under the President's FY 1997 budget, payments for medical education would be eliminated from HMO rates and redistributed to teaching hospitals and managed care plans with teaching programs.

N. Discharges from Hospitals to Other Facilities (Recommendation 19)

Recommendation: Medicare payments should be modified to account for the shift in services from acute to postacute settings. Broadening the definition of transfer cases, however, is not an appropriate approach.

Response: In both the September 1, 1994 and September 1, 1995 final rules, we expressed our concern that the current trend of declining average lengths of stay as hospitals discharge Medicare patients into alternative health care settings (other than acute care prospective payment hospitals) in less time may result in a misalignment of payments and costs under our existing payment systems (59 FR 45362; 60 FR 29221). In particular, we expressed concern over the potential for hospitals paid under the prospective payment system to shift costs (for which they are compensated through the DRG payments) to alternative settings, which are in turn paid on a cost basis. Although we solicited comments on possible solutions to this problem, we did not propose any change in policy.

The President's FY 1997 budget includes a proposal to redefine discharges from acute care hospitals to excluded hospitals and units and skilled nursing facilities as transfers for payment purposes. Currently, for cases transferred from one acute care hospital paid under the prospective payment system to another like hospital, the sending hospital is paid a per diem rate

instead of the full DRG amount. For cases transferred to an excluded hospital or unit or to a skilled nursing facility (as well as cases discharged home or home with home health care), hospitals receive the full DRG payment amount, regardless of the length of stay in the hospital. Under the per diem transfer payment methodology, hospitals receive a per diem amount (doubled for the first day of the stay) until the full DRG amount is reached. Therefore, under the President's budget proposal, hospitals transferring patients to excluded facilities or skilled nursing facilities prior to the geometric mean length of stay for the DRG, minus one day (to account for the double per diem on the first day), would receive less than the full DRG amount for that case.

The basis for ProPAC's opposition to this proposal is that it ''* * * thinks this policy would discourage the use of postacute providers. Moreover, it could result in longer inpatient stays, which may not be desirable or cost effective in the long run.'' We acknowledge that the change in the definition of a transfer is not the ultimate solution to this health care trend. In response to immediate concerns about overpaying hospitals for the reduced services they are providing and the rate of increase in expenditures for postacute care services, however, we believe this is an appropriate interim measure while we continue to explore long-term policy alternatives that will better integrate our payment systems for care provided to Medicare beneficiaries across the acute and postacute care settings.

O. Prospective Payment for PostAcute Care (Recommendation 20)

Recommendation: Prospective payment systems should be implemented for all postacute services. The payment method for each service should be consistent across delivery sites. The Secretary should explore methods to control volume of postacute service use, such as bundling services for a single payment.

Response: We agree that HCFA should develop prospective payment systems for all postacute services, and we have made significant progress in this area. As we discuss in our responses to Recommendations 22 and 23, we have developed detailed implementation plans for interim prospective payment systems for skilled nursing facilities (SNFs) and home health agencies (HHAs) that do not require patient classification systems. Execution of these plans will, of course, require legislative action.

Beyond our interim plan, we have developed a strategy for developing a full-fledged prospective payment system for SNFs. In the absence of legislation, we have been pursuing data that could be used to support a case-mix prospective payment system through our Multi-State Case Mix Demonstration Project. This demonstration project, now in its operational phase, is collecting data on patient case mix using a modified version of the minimum data set, the assessment tool SNFs use in developing patient care plans. Through the course of the demonstration, we hope to gather data on the full range of SNF resources needed for each resource utilization group. We are proceeding to require by regulation that all facilities provide resident assessment data. Consolidated billing of SNF services (that is, requiring SNFs to bill for all services furnished to their patients) and uniform coding of SNF services are also prerequisites for a SNF prospective payment system. Consolidated billing and uniform coding are needed to determine the appropriate payment for the ancillary services component of SNF services and to provide useful data on the range of services SNFs furnish.

We have also been working on a strategy to develop a full-fledged prospective payment system for HHAs. We have funded a project to develop outcome measures for home care that can be used for an outcome-based quality improvement system. These measures will be based largely on a core standard assessment data set that includes items measuring sociodemographic, environmental, support system, health status, functional status, and health service utilization characteristics of patients. Many of these data items included in the core standard assessment data set are not only essential for assessing patient outcomes but are also critical for designing an adequate case-mix system for payment purposes. To test and refine Medicare's approach to outcome based quality improvement for home health care, HCFA is currently sponsoring the Medicare Quality Assurance and Improvement Demonstration, which uses this instrument. We plan to publish regulations identifying the required data elements and addressing the collection of information from the core standard assessment data set. We also plan to sponsor additional research that would lead to an appropriate case-mix adjuster that can be used in a national prospective payment system.

In addition to the developmental work underway on SNF and HHA prospective payment systems, we have begun work on the preliminary steps necessary for the development of a prospective payment system for hospital inpatient rehabilitation services. The biggest obstacle we have faced in this effort is the lack of appropriate patient classification systems for the types of patients treated by rehabilitation hospitals. We have recently contracted with the Rand Corporation to evaluate a rehabilitation coding system known as the Functional Impairment Measure (FIM), which is a scoring system that measures the degree of functional independence of rehabilitation patients. These researchers will also evaluate the patient classification system known as functional related groups (FRGs), which are based on FIM, as a possible basis for a Medicare prospective payment system for rehabilitation services. If the research confirms functional status measures can be used to develop an appropriate patient classification system, we will begin the additional work necessary to put a prospective payment system into place. This would require collecting patient assessment data from Medicare rehabilitation hospitals and units and developing all the necessary components of the new payment system. It will take at least 3 years to design and implement such a system. To facilitate implementation, we are considering initiating collection of patient assessment data in advance of legislation establishing a prospective payment system. We will be seeking public input on whether to proceed with a requirement for patient assessment data in the absence of legislation and what data elements should be included in a core data set that could be used not only as the basis for a patient classification system but also to assess outcomes.

We recognize that there are advantages to a coordinated approach in developing prospective payment systems for postacute services and we will be evaluating how to make them as consistent as possible. We also recognize that the demand for implementation of prospective payment systems for post-acute services is sufficiently immediate so that there may not be time for the broad study, data collection, and research needed to develop a ''unified'' system using similar resource grouping principles. Most of the current legislative proposals, including the Administration's proposals, would require implementation dates within the next several years. It may not be feasible to develop a ''unified'' system within the time frames contemplated by the current legislative proposals. Trade-offs may be required between continuation of the interim payment systems versus

the full-blown prospective payment systems on one hand, and the separate versus ''unified'' prospective payment systems on the other hand.

P. Case-Mix Measures for PostAcute Services (Recommendation 21)

Recommendation: Reliable case-mix measurement is important in prospective payment systems to account for resource use and to analyze treatment patterns and costs across sites. The Secretary should coordinate case-mix research across postacute care settings, using consistent methods for measuring patient acuity and resource use.

Response: We are attempting to coordinate our work on case-mix adjustment for home health care, long-term and SNF care, and rehabilitative services. To develop a case-mix adjustment system for SNF care, time studies were conducted in order to measure resource utilization. Similarly, as noted above in response to Recommendation 20, we plan to fund research to identify a home health case-mix adjuster.

In addition, in the case-mix work to date for both home health care and SNF care, dependence in activities of daily living is the biggest predictor of resource utilization. Some of the other predictors differ across SNF care and home health care due to differences in the treatment settings and the availability of information for a classification system.

As also noted above in the preceding response, researchers at the University of Pennsylvania have developed a classification system based on FIMs called Function Related Groups (FIM–FRGs). This system appears promising for use in a case-mix adjusted prospective payment system for rehabilitation and long-term care facilities, and we are working with the Rand Corporation on a research project to evaluate the suitability of FIM–FRGs for this purpose.

We agree that a compatible cross-provider measure of resource use would be the best multiplier in any universal postacute system. We also believe that such measures do not now exist and to produce them would require the program to incur significant costs and impose significant data reporting and collection requirements on providers. We would prefer to obtain explicit legislative direction before we incur these costs and impose these burdens. Even so, we believe several years would be required to gather the data and develop the case-mix measures. For these reasons, we believe that interim prospective payment systems of the types contained in the President's FY 1997 budget should be put in place.

Q. Interim Fee-for-Service Payment Method for Skilled Nursing Facility Services (Recommendation 22)

Recommendation: An interim payment method should be implemented to control the growth in Medicare payments for SNF services until a comprehensive prospective payment system is established. A system based on historical data and facility-specific limits, however, may not allow facilities to respond appropriately to changes in a dynamic environment.

Response: We agree with ProPAC's recommendation that an interim payment system should be developed until a permanent system is established. Both the interim and permanent payment systems could better promote the goals of quality care, maximum access to care, and cost containment. A payment system that incorporates these goals is essential as the nursing home industry evolves toward a more eclectic mix of care levels and delivery models. In addition, the need exists for a payment system that is simpler to administer for both providers and HCFA. In order to maximize these goals, a permanent prospective payment system for SNFs should include payment for all costs (that is, routine operating, ancillary, and capital costs) and take into account actual facility case mix. However, thecase-mix and ancillary cost data necessary to accomplish this goal are not yet available.

In the interim, based on current data resources, a prospective payment system could be implemented. It would apply solely to routine costs (including routine capital costs) and utilize facility-specific payment rates subject to cost limits. We are studying various cost limit designs, such as regional limits versus national limits, to account for geographical cost differences. In addition, methodologies to ease the transition from the current payment system would be incorporated into an interim prospective payment system.

While there is agreement that a need exists to implement an interim prospective payment system for SNFs, the Commission believes that a system based on historical data and facility-specific limits may not allow facilities to respond appropriately to changes in a dynamic environment. However, we believe that a facility-specific interim prospective payment system would provide a number of advantages over the current system, and could be constructed to accommodate changes in a facility's case mix. The system would provide for greater cost containment and administrative simplicity, through predetermined pricing. In addition, the potential to earn a profit under the interim system, by holding down costs, would provide an incentive for nursing homes to participate in Medicare, or certify more beds if already participating. This would provide greater access for beneficiaries. This same incentive would produce greater efficiency in nursing home operations and would support the provision of quality care. When compared to a flat rate system, a facility-specific system would maintain an appropriate distribution of payments, since the basis of payments under the system is the nursing homes' own cost history. As a nursing home case-mix classification system is finalized and tested, and further analysis is completed on ancillary payment, these elements would be incorporated into the payment system.

In addition, we are analyzing some features of an interim system that would result in savings for the Medicare program. Specifically, in developing providers' facility-specific payment rates for routine services, the system would incorporate one set of cost limits based on freestanding costs only. The current system provides for separate (higher) limits for hospital-based facilities. Consequently, savings would result from holding down payments to these hospital-based SNFs. In addition, savings would result through the elimination of routine cost limit exemptions granted to new providers of skilled nursing services. The current system of cost limit exceptions for ''atypical nursing services'' would be eliminated as well. Finally, the Medicare Part B carrier fee schedules could be utilized for Part A SNF services as a limit on the reasonable costs of certain ancillary services. Currently, there are no limits or reasonable cost guidelines for many of these services.

We support the ProPAC view that a per-episode payment system be developed. We have noted above, however, that there are great obstacles to developing both (1) prospective payment systems that are consistent across provider types with respect to the method of measuring resource use, and (2) classifications systems for episodes of postacute care (either by provider type or in general) that account for a sufficient degree of the variability among different types of patients. Thus, our inclination would be to pursue our current plans for the prospective payment systems with the thought that

further refinements could be made when data are available.

R. Interim Fee-for-Service Payment Method for Home Health Care (Recommendation 23)

Recommendation: Until a fully prospective payment system for home health care is developed, the Commission supports adopting episode-based payment limits. In addition, beneficiary copayments, subject to an annual limit, should be introduced.

Response: There is agreement between ProPAC and HCFA that an interim cost control mechanism should be established prior to implementing a prospective payment system for home health care. We would like to highlight significant differences between the prospective payment systems proposed by the Congress and the Administration.

The congressional proposal would limit payment to 120 days of service with certain exceptions for up to 165 days of care. This provision has the potential of serious financial impact on some agencies, as well as reduced access to services for some patients with the greatest needs. The proposal also assumes the availability of data and systems to categorize and assign patients to one of the 18 ''case-mix categories'' established in Phase II of HCFA's HHA prospective payment system demonstration. Neither the data nor the systems are currently in existence, and the implementation of such a system would entail a major increase in the reporting burden on agencies. Were we able to implement such a system, we estimate that the system would be able to explain less than 10 percent of the variation in cost per episode, at best.

The Administration's interim proposal entails no increased reporting burden, as it uses data currently reported by agencies. Although that budget proposal does not provide for per-episode payments, its aggregate payment caps effectively create a per-episode cap on costs. Given the uncertainty about the resource composition of individual types of episodes, the use of an aggregate cap gives agencies an incentive to provide services in a cost effective manner by sharing savings with agencies whose costs are below their per beneficiary limitation. We note that ProPAC was also concerned that the interim proposal utilizes regional cost experience, which the Commission feels may not be appropriate. The President's FY 1997 budget includes a provision to use average national or regional cost experience in constructing the per beneficiary limitation. We agree with ProPAC that, should we find unjustified differences in regional cost experience, we would support a move to national cost experience as the basis for the per beneficiary limit.

It may be necessary to use regional rates to move individual HHAs toward a national norm over time. This would avoid major displacements. We are considering both regional and national blending.

We do not agree with the ProPAC recommendation that beneficiary copayments be introduced. Our proposed interim system of limits should adequately control the growth in service use. We do not agree with shifting costs to beneficiaries, however limited, as a method of controlling the growth in utilization.

As HCFA moves forward in designing a prospective payment system for home health care, we will consider ProPAC's recommendations to look at more uniformly defined units of services.

S. Update to the Composite Rate for Dialysis Services (Recommendation 24)

Recommendation: The Secretary should develop methods to control total Medicare per capita expenditures for end stage renal disease (ESRD) beneficiaries. In the meantime, the composite rate should be updated by 2.7 percent for hospital-based dialysis facilities and by 2.0 percent for freestanding facilities for fiscal year 1997. The Secretary should also develop reliable measures of patient severity and outcomes to analyze the relationships among treatment processes, patient outcomes, and costs. These factors should be considered in evaluating the need for and the level of future payment updates.

Response: One of ProPAC's suggestions is that HCFA consider opening enrollment for ESRD beneficiaries to participate in Medicare risk programs. The reason for this recommendation is the rapid growth in total Medicare spending for ESRD beneficiaries. A large part of this increase is attributable to the expanding ESRD population, especially older patients who require more services. These beneficiaries are using more acute inpatient, skilled nursing and other dialysis-related services than ever before. ProPAC suggests that to control these expenditures, Medicare examine the possibility of adopting a capitation payment system for ESRD services, since capitation rates have been successful in controlling expenditure growth for other populations. At a minimum, they are recommending that utilization review or other managed care techniques be used to control the total volume of services provided to ESRD beneficiaries across all sites of care.

Section 1876(d) of the Act currently prevents an individual with ESRD from enrolling in an HMO or a competitive medical plan. However, an individual who is enrolled in a prepaid health plan when he or she is determined to have ESRD may continue enrollment in that plan. A prepaid health plan may only disenroll a beneficiary as provided by regulations at 417.460.

Congress addressed the issue of paying for ESRD services in a capitation setting in legislation. Section 13567(b) of the Omnibus Budget Reconciliation Act of 1993 (Public Law 103–66) (August 10, 1993) amended section 2355 of Public Law 98–369 by requiring the Secretary to include the integration of acute and chronic care management for patients with ESRD through expanded community care case management services in a social health maintenance organization (SHMO). Initial legislation required the Secretary to grant demonstration waivers for SHMOs that provide for the integration of health and social services at a fixed annual prepaid capitation rate. In the January 26, 1996 Federal Register, we published a notice informing interested parties of the opportunity to apply for funds for a cooperative agreement to operate an ESRD Managed Care Demonstration (61 FR 2516). Two of the demonstration's purposes would be to test whether ESRD beneficiaries can and should be given access to HMOs during open enrollment and whether the statewide capitation rate can and should be adjusted. The demonstration would adjust rates for treatment status (such as dialysis, transplant, or a functioning graft), age groups and the cause of renal failure (for example, diabetes). As the legislation requires, rates would be based on 100 percent of the adjusted average per capita costs (AAPCC); additional non-Medicare-covered benefits would be offered by the provider to justify the additional 5 percent beyond the 95 percent of the AAPCC paid to Medicare risk-contracting HMOs on behalf of ESRD enrollees. Based on the results of this demonstration, we would make recommendations to Congress concerning the appropriateness of paying for dialysis services in a capitation setting.

To improve the quality of care ESRD patients are receiving, we are in the process of developing proposed rules for ESRD conditions for coverage. The essence of the regulation is patient-centered and outcome-oriented. The proposed conditions for coverage will focus on facilities achieving an optimal

level of health and well-being for all dialysis patients. The proposed rules will be published in Spring 1996 with expected implementation in late fiscal year 1997.

While we share ProPAC's concern that payment rates be sufficient to assure quality care for ESRD patients, we do not believe there is sufficient evidence at this point to conclude that more money is needed to provide appropriate care. Currently, the University of Michigan, as part of a National Institute of Health grant, is examining the relationship between facilities' costs and the level of KT/V. Also the National Institute of Diabetes and Digestive and Kidney Diseases is sponsoring a study on the impact of increasing dialysis as measured by KT/V and the use of high-flux-dialysis on ESRD patients. The results of these studies should help us analyze the relationship between patient outcomes and costs, and thus provide us with a basis for recommending an appropriate payment rate increase.

While we acknowledge that an increase in the composite rate may be appropriate in the next few years, we believe that any rate increase should be linked to implementation of the revised conditions for coverage. Moreover, any ESRD rate increase must be considered within the context of Medicare budgetary concerns and should have a direct link to improved patient outcomes. We will continue to monitor ESRD facility costs, and, if appropriate, we may recommend an update to the ESRD composite rate for FY 1998.

We note that ProPAC's recommendation provides for an across-the-board rate increase for all renal facilities. However, data show that high volume independent facilities (over 6,000 treatments per year) account for about 85 percent of independent dialysis treatments. These high volume facilities report margins between Medicare payments and costs that are higher than average. Therefore, in proposing a future rate increase, we would want to examine the need to adjust payment increases for volume. In addition, we believe that any update to the composite rate should include an update to the wage index currently used to adjust the labor portion of the rate. We are currently using an outdated wage index which is a blend of 1980 Bureau of Labor Statistics (BLS) and 1984 prospective payment system wage data and does not reflect the MSA revisions resulting from the 1990 census.

The Commission's final recommendation is that the Secretary closely monitor treatment patterns and patient outcomes to ensure that facilities use the payment increase to improve quality of care. The proposed ESRD conditions for coverage should address this issue. We expect the proposed rule to be published in the Federal Register before Summer 1996. Between the publication of the proposed and final rules, HCFA is planning to meet with the renal community to develop complete clinical data sets to monitor patient outcomes and medical conditions. These data will then be used to evaluate the quality of dialysis services furnished by individual facilities. Of course, this is a long-term project. In the short term, we are exploring the possibility of collecting limited patient outcome data such as KT/V and URR.

T. Prospective Payment for Hospital Outpatient Services (Recommendation 25)

Recommendation: A comprehensive prospective payment system should be developed for hospital outpatient services. Such a system should include a strategy for controlling the volume of ambulatory services.

Response: We agree with the need to implement a comprehensive prospective payment system for outpatient services. While we await legislative authority, we continue to develop and refine the Medicare-specific factors of the Ambulatory Patient Group (APG) system that we recommend using. We plan to analyze the payments that would be made across sites, for example in Ambulatory Surgical Centers (ASCs) or physician radiology practices, to ensure that we have not created unwarranted incentives to perform procedures in a given setting for financial reasons.

We are concerned as well about the potential for increases in the volume of services provided, both in outpatient departments and in other settings. We are examining approaches to volume measurement and control, including the level of packaging for ancillary services and monitoring of patterns of care. For example, we could track whether Medicare beneficiaries received more clinic visits per patient under APGs than they did under cost-based reimbursement. If so, we could take corrective action either systemically or on a hospital-specific basis. This issue clearly requires study. We welcome suggestions in this area.

U. Beneficiary Liability for Hospital Outpatient Services (Recommendation 26)

Recommendation: The growing financial burden for Medicare enrollees who receive services in hospital outpatient departments should be alleviated immediately. Beneficiary coinsurance for these services should be limited to 20 percent of the Medicare-allowed payment, as it is in other settings. For services not paid on a prospective basis, the Secretary should establish a new method for determining beneficiary copayments based on estimated allowed payments since they cannot be calculated precisely when services are delivered.

Response: We agree that the issue of beneficiary coinsurance should be addressed. In the context of the monies available to the Medicare program, we doubt that Congress would authorize that Medicare immediately assume the full cost of paying 80 percent of the cost of outpatient services. Among the approaches that could be used are: (1) Applying the savings achieved by eliminating the formula-driven overpayment to offset the beneficiaries' responsibility; (2) requiring copayments in other areas of the program, such as for home health services or laboratory services; and/or (3) moving gradually to reduce the ratio of copayments to total payments. One issue that must be considered at the same time is the rise in the Part B premium that would accompany any significant increase in program payments. This would have the effect of distributing costs over the entire range of beneficiaries, rather than having it focused only on those patients who actually use outpatient services, as it is now. We are eager to have this issue addressed and resolved, but know that it must be examined in light of broader budget decisions.

IX. Other Required Information

A. Paperwork Reduction Act

The Paperwork Reduction Act of 1995 provides for notice and comment when a collection of information requirement is submitted to the Office of Management and Budget (OMB) for review and approval. In order to fairly evaluate whether an information collection should be approved by OMB, section 3506(c)(2)(A) of the Paperwork Reduction Act of 1995 requires that we solicit comment on the following issues:

- Whether the information collection is necessary and useful to carry out the proper functions of the agency;
- The accuracy of the agency's estimate of the information collection burden;
- The quality, utility, and clarity of the information to be collected; and
- Recommendations to minimize the information collection burden on the affected public, including automated collection techniques.

Therefore, we are soliciting public comment on each of these issues for the information collection requirement discussed below.

The only information collection or paperwork burden item contained in this proposed rule involves the requirement under § 489.27 that a hospital furnish each Medicare beneficiary with a notice of discharge rights supplied by HCFA, that is, 'An Important Message from Medicare.'

As discussed in section V.F of this preamble, we are revising the current requirement that a hospital must distribute the 'Important Message' to each Medicare beneficiary at or about the time of admission. In order to permit hospitals more flexibility, but still ensure that benficiaries are aware of their discharge rights, we are proposing to revise § 489.27 to specify that a hospital must provide the notice of discharge rights 'during the course of the hospital stay.' We estimate that the paperwork burden associated with the requirement that hospital personnel distribute the 'Important Message' to each Medicare beneficiary is approximately 1 minute per admission. Based on our most recent available data (1995 Data Compendium, HCFA Pub. No. 03364), there are roughly 11 million Medicare beneficiaries admitted to hospitals each year, resulting in an annual burden of approximately 183,000 hours.

This paperwork burden is not effective until it has been approved by OMB. A notice will be published in the Federal Register when approval is obtained. Organizations and individuals desiring to comment on this paperwork burden requirement should submit comments by July 30, 1996 to the Office of Management and Budget, Human Resources and Housing Branch, Room 10235, New Executive Office Building, Washington, D.C., 20503, Attention: Allison Herron Eydt, HCFA Desk Officer.

B. Requests for Data from the Public

In order to respond promptly to public requests for data related to the prospective payment system, we have set up a process under which commenters can gain access to the raw data on an expedited basis. Generally, the data are available in computer tape format or cartridges; however, some files are available on diskette, and on the internet at HTTP://WWW.HCFA.GOV/STATS/PUBFILES.HTML. Data files are listed below with the cost of each. Anyone wishing to purchase data tapes, cartridges, or diskettes should submit a written request along with a company check or money order (payable to HCFA–PUF) to cover the cost, to the following address: Health Care Financing Administration, Public Use Files, Accounting Division, P.O. Box 7520, Baltimore, Maryland 21207–0520, (410) 786–3691. Files on the internet may be downloaded without charge.

1. Expanded Modified MEDPAR-Hospital (National)

The Medicare Provider Analysis and Review (MEDPAR) file contains records for 100 percent of Medicare beneficiaries using hospital inpatient services in the United States. (The file is a Federal fiscal year file which means discharges occurring October 1 through September 30.)The records are stripped of most data elements that will permit identification of beneficiaries. The hospital is identified by the 6-position Medicare billing number. The file is available to persons qualifying under the terms of the Notice of Proposed New Routine Uses for an Existing System of Records published in the Federal Register on December 24, 1984 (49 FR 49941), and amended by the July 2, 1985 notice (50 FR 27361). The national file consists of approximately 11 million records. Under the requirements of these notices, a data release agreement must be signed by the purchaser before release of these data. For all files requiring a signed data release agreement, please write or call to obtain a blank agreement form before placing an order. Two versions of this file are created each year. They support the following:

- Notice of Proposed Rulemaking (NPRM) published in the Federal Register, usually available by the end of May. This file is derived from the MedPAR file with a cutoff of 3 months after the end of the fiscal year (December file).
- Final Rule published in the Federal Register, usually available by the first week of September. This file is derived from the MedPAR file with a cutoff of 9 months after the end of the fiscal year (June file).

Media: Tape/Cartridge
File Cost: $3,415.00 per fiscal year
Periods Available: FY 1988 through FY 1995

2. Expanded Modified MedPAR-Hospital (State)

The State MedPAR file contains records for 100 percent of Medicare beneficiaries using hospital inpatient services in a particular State. The records are stripped of most data elements that will permit identification of beneficiaries. The hospital is identified by the 6-position Medicare billing number. The file is available to persons qualifying under the terms of the Notice of Proposed New Routine Uses for an Existing System of Records published in the December 24, 1984 Federal Register notice, and amended by the July 2, 1985 notice. This file is a subset of the Expanded Modified MedPAR-Hospital (National) as described above. Under the requirements of these notices, a data release must be signed by the purchaser before release of these data. Two versions of this file are created each year. They support the following:

- NPRM published in the Federal Register, usually available by the end of May. This file is derived from the MedPAR file with a cutoff of 3 months after the end of the fiscal year (December file).
- Final Rule published in the Federal Register, usually available by the first week of September. This file is derived from the MedPAR file with a cutoff of 9 months after the end of the fiscal year (June file).

Media: Tape/Cartridge
File Cost: $1,050.00 per State per year
Periods Available: FY 1988 through FY 1995

3. HCFA Hospital Wage Index Data File

This file is composed of four separate diskettes. Included are: (1) The hospital hours and salaries for FY 1993 used to create the proposed FY 1997 prospective payment system wage indexes; (2) a history of all wage indexes used since October 1, 1983; (3) a list of State and county codes used by SSA and FIPS (Federal Information Processing Standards), county name, and Metropolitan Statistical Area (MSA); and (4) a file of hospitals that were reclassified for the purpose of the FY 1997 wage index. Two versions of these files are created each year. They support the following:

- NPRM published in the Federal Register, usually by the end of May.
- Final Rule published in the Federal Register, usually by the first week of September.

Media: Diskette/Internet
File Cost: $500.00
Periods Available: FY 1997 PPS Update

We note that the files also are available individually as indicated below.

(1) HCFA Hospital Wage Index Survey Only (usually available by the end of March for the NPRM and the middle of August for the final rule.)

(2) Urban and Rural Wage Indices Only

(3) PPS SSA/FIPS MSA State and County Crosswalk Only (usually available by the end of March)

(4) Reclassified Hospitals by Provider Only

Media: Diskette/Internet

File cost: $145.00 per file

4. PPS–IV to PPS–XII Minimum Data Sets

The Minimum Data Set contains cost, statistical, financial, and other information from the Medicare hospital cost report. The data set includes only the most current cost report (as submitted, final settled or reopened) submitted for a Medicare participating hospital by the Medicare Fiscal Intermediary to HCFA. This data set is updated at the end of each calendar quarter and is available on the last day of the following month.

Media: Tape/Cartridge

	Periods beginning on or after	and before
PPS IV	10/01/86	10/01/87
PPS V	10/01/87	10/01/88
PPS VI	10/01/88	10/01/89
PPS VII	10/01/89	10/01/90
PPS VIII	10/01/90	10/01/91
PPS IX	10/01/91	10/01/92
PPS X	10/01/92	10/01/93
PPS XI	10/01/93	10/01/94
PPS XII	10/01/94	10/01/95

(NOTE: The PPS XII Minimum Data Set covering 1995 will not be available until July 31, 1996.)

File Cost: $715.00 per year

5. PPS-IX to PPS-XII Capital Data Set

The Capital Data Set contains selected data for capital-related costs, interest expense and related information and complete balance sheet data from the Medicare hospital cost report. The data set includes only the most current cost report (as submitted, final settled or reopened) submitted for a Medicare certified hospital by the Medicare fiscal intermediary to HCFA. This data set is updated at the end of each calendar quarter and is available on the last day of the following month.

Media: Tape/Cartridge

	Periods beginning on or after	and before
PPS IX	10/01/91	10/01/92
PPS X	10/01/92	10/01/93
PPS XI	10/01/93	10/01/94
PPS XII	10/01/94	10/01/95

(NOTE: The PPS XII Capital Data Set covering 1994 will not be available until July 31, 1996.)

File Cost: $715.00 per year

6. Provider-Specific File

This file is a component of the PRICER program used in the fiscal intermediary's system to compute DRG payments for individual bills. The file contains records for all prospective payment system eligible hospitals, including hospitals in waiver States, and data elements used in the prospective payment system recalibration processes and related activities. Beginning with December 1988, the individual records were enlarged to include pass-through per diems and other elements.

Media: Tape/Cartridge
File Cost: $500.00 per file
Periods Available: FY 1987 through FY 1996 (December updates)

Media: Diskette/Internet
File Cost: $265.00
Periods Available: FY 1996 PPS Update

7. HCFA Medicare Case-Mix Index File

This file contains the Medicare case-mix index by provider number as published in each year's update of the Medicare hospital inpatient prospective payment system. The case-mix index is a measure of the costliness of cases treated by a hospital relative to the cost of the national average of all Medicare hospital cases, using DRG weights as a measure of relative costliness of cases. Two versions of this file are created each year. They support the following:

- NPRM published in the Federal Register, usually by the end of May.
- Final rule published in the Federal Register, usually by the first week of September.

Media: Diskette/Internet
Price: $145.00 per year
Periods Available: FY 1985 through FY 1995 (Internet—FY 1995)

8. Table 5 DRG File

This file contains a listing of DRGs, DRG narrative description, relative weight, geometric mean, length of stay, and day outlier trim points as published in the Federal Register. The hardcopy image has been copied to diskette. There are two versions of this file as published in the Federal Register:

a. NPRM, usually published by the end of May.

b. Final rule, usually published by the first week of September.

Media: Diskette/Internet
File Cost: $145.00
Periods Available: FY 1997 PPS Update

9. PPS Payment Impact File

This file contains data used to estimate payments under Medicare's hospital inpatient prospective payment systems for operating and capital-related costs. The data are taken from various sources, including the Provider-Specific File, Minimum Data Sets, and prior impact files. The data set is abstracted from an internal file used for the impact analysis of the changes to the prospective payment systems published in the Federal Register. This file is available for release 1 month after the proposed and final rules are published in the Federal Register.

Media: Diskette/Internet
File Cost: $145.00
Periods Available: FY 1997 PPS Update

10. AOR/BOR Tables

This file contains data used to develop the DRG relative weights. It contains mean, maximum, minimum, standard deviation and coefficient of variation statistics by DRG for length of stay and standardized charges. The BOR tables are ''Before Outliers Removed'' and the AOR is ''After Outliers Removed.'' (Outliers refers to statistical outliers, not payment outliers.) Two versions of this file are created each year. They support the following:

- NPRM published in the Federal Register, usually by the end of May.
- Final rule published in the Federal Register, usually by the first week of September.

Media: Diskette/Internet
File Cost: $145.00
Periods Available: FY 1997 PPS Update

11. HCFA FY 1992 Capital-Related Tax File

This file contains data used to develop a special property tax adjustment to the capital prospective payment system for capital-related costs. The data set includes a preliminary hospital-specific add-on amount for all PPS hospitals. The data set also contains the information used to propose an adjustment to the Federal rate so that the tax add-on is budget neutral. The proposed property tax adjustment provides special treatment to qualified hospitals who pay capital-related property taxes. The add-on was 10. determined using base year tax costs per discharge attributable to Medicare. The data are taken from the FY 1992 Medicare hospital cost report and a special request for validation by the fiscal intermediaries.

Media: Diskette
File cost: $145.00
Period available: FY 1992

For further information concerning these data tapes, contact Mary R. White at (410) 786–0168.

Commenters interested in obtaining or discussing any other data used in constructing this rule should contact Stephen Phillips at (410) 786–4548.

C. Public Comments

Because of the large number of items of correspondence we normally receive on a proposed rule, we are not able to acknowledge or respond to them individually. However, in preparing the final rule, we will consider all comments concerning the provisions of this proposed rule that we receive by the date and time specified in the ''Dates'' section of this preamble and respond to those comments in the preamble to that rule. We emphasize that, given the statutory requirement under section 1886(e)(5) of the Act that our final rule for FY 1997 be published by September 1, 1996, we will consider only those comments that deal specifically with the matters discussed in this proposed rule.

List of Subjects

42 CFR Part 412

Administrative practice and procedure, Health facilities, Medicare, Puerto Rico, Reporting and recordkeeping requirements.

42 CFR Part 413

Health facilities, Kidney diseases, Medicare, Puerto Rico, Reporting and recordkeeping requirements.

42 CFR Part 489

Health facilities, Medicare.

42 CFR chapter IV would be amended as set forth below:

A. Part 412 would be amended as follows:

PART 412—PROSPECTIVE PAYMENT SYSTEMS FOR INPATIENT HOSPITAL SERVICES

1. The authority citation for part 412 continues to read as follows:

Authority: Secs. 1102 and 1871 of the Social Security Act (42 U.S.C. 1302 and 1395hh).

Subpart D—Basic Methodology for Determining Prospective Payment Federal Rates for Inpatient Operating Costs

2. In § 412.63(s)(1), a new sentence is added at the end to read as follows:

§ 412.63 Federal rates for inpatient operating costs for fiscal years after Federal fiscal year 1984.

* * * * *

(s) * * *

(1) * * * The wage index is updated annually.

* * * * *

Subpart L—The Medicare Geographic Classification Review Board

3. In 412.246, paragraph (b) is revised to read as follows:

§ 412.246 MGCRB members.

* * * * *

(b) *Term of office.* The term of office for an MGCRB member may not exceed 3 years. A member may serve more than one term. The Secretary may terminate a member's tenure prior to its full term.

Subpart M—Prospective Payment System for Inpatient Hospital Capital Costs

4. In § 412.302, a new paragraph (d)(4) is added to read as follows:

§ 412.302 Introduction to capital costs.

* * * * *

(d) * * *

(4) Hospitals may elect the simplified cost allocation methodology under the terms and conditions provided in the instructions for HCFA Form 2552.

B. Part 413 would be amended as follows:

PART 413—PRINCIPLES OF REASONABLE COST REIMBURSEMENT; PAYMENT FOR END-STAGE RENAL DISEASE SERVICES; OPTIONAL PROSPECTIVELY DETERMINED PAYMENT RATES FOR SKILLED NURSING FACILITIES

1. The authority citation for part 413 continues to read as follows:

Authority: Secs. 1102, 1861(v)(1)(A), and 1871 of the Social Security Act (42 U.S.C. 1302, 1395x(v)(1)(A), and 1395hh).

Subpart C—Limits on Cost Reimbursement

2. In § 413.40, paragraph (d)(3) is revised to read as follows:

§ 413.40 Ceiling on the rate of increase in hospital inpatient costs.

* * * * *

(d) * * *

(3) *Net inpatient operating costs are greater than the ceiling.* For cost reporting periods beginning on or after October 1, 1991, if a hospital's allowable net inpatient operating costs exceed the hospital's ceiling (or the adjusted ceiling, if applicable), payment will be based on the lower of the—

(i) Ceiling (or the adjusted ceiling, if applicable) plus 50 percent of the allowable net inpatient operating costs in excess of the ceiling (or the adjusted ceiling, if applicable); or

(ii) One hundred-ten percent of the ceiling (or the adjusted ceiling, if applicable).

* * * * *

Subpart F—Specific Categories of Costs

3. In § 413.86, a new sentence is added at the end of paragraph (g)(1) introductory text to read as follows:

§ 413.86 Direct graduate medical education payments.

* * * * *

(g) * * *

(1) * * * For combined residency programs, an inital residency period is defined as the time required for individual certification in the longer of the two programs.

* * * * *

C. Part 489 would be amended as follows:

PART 489—PROVIDER AGREEMENTS AND SUPPLIER APPROVAL

1. The authority citation for part 489 continues to read as follows:

Authority: Secs. 1102, and 1871 of the Social Security Act (42 U.S.C. 1302, and 1395hh).

Subpart B—Essentials of Provider Agreements

2. Section 489.27 is revised to read as follows:

§ 489.27 Beneficiary notice of discharge rights.

A hospital that participates in the Medicare program must furnish each Medicare beneficiary, or an individual acting on his or her behalf, the notice of discharge rights HCFA supplies to the hospital to implement section 1886(a)(1)(M) of the Act. The hospital must provide timely notice during the course of the hospital stay. For purposes of this paragraph, the course of the hospital stay may begin with the provision of a package of information regarding scheduled preadmission testing and registration for a planned hospital admission. The hospital must be able to demonstrate compliance with this requirement.

(Catalog of Federal Domestic Assistance Program No. 93.773, Medicare—Hospital Insurance; and Program No. 93.774, Medicare—Supplementary Medical Insurance Program)

Dated: May 13, 1996.

Bruce C. Vladeck,

Administrator, Health Care Financing Administration.

Dated: May 24, 1996.

Donna E. Shalala,

Secretary.

[Editorial Note: The following addendum and appendixes will not appear in the Code of Federal Regulations.]

Addendum—Proposed Schedule of Standardized Amounts Effective With Discharges on or After October 1, 1996 and Update Factors and Rate-of-Increase Percentages Effective With Cost Reporting Periods Beginning on or After October 1, 1996

I. Summary and Background

In this addendum, we are setting forth the proposed amounts and factors for determining prospective payment rates for Medicare inpatient operating costs and Medicare inpatient capital-related costs. We are also setting forth proposed rate-of-increase percentages for updating the target amounts for hospitals and hospital units excluded from the prospective payment system.

For discharges occurring on or after October 1, 1996, except for sole community hospitals and hospitals located in Puerto Rico, each hospital's payment per discharge under the prospective payment system will be based on 100 percent of the Federal national rate.

Sole community hospitals are paid based on whichever of the following rates yields the greatest aggregate payment: the Federal national rate, the updated hospital-specific rate based on FY 1982 cost per discharge, or the updated hospital-specific rate based on FY 1987 cost per discharge. For hospitals in Puerto Rico, the payment per discharge is based on the sum of 75 percent of a Puerto Rico rate and 25 percent of a national rate (section 1886(d)(9)(A) of the Act).

As discussed below in section II, we are proposing to make changes in the determination of the prospective payment rates for Medicare inpatient operating costs. The changes, to be applied prospectively, would affect the calculation of the Federal rates. In section III, we discuss our proposed changes for determining the prospective payment rates for Medicare inpatient capital-related costs. Section IV sets forth our proposed changes for determining the rate-of-increase limits for hospitals excluded from the prospective payment system. The tables to which we refer in the preamble to the proposed rule are presented at the end of this addendum in section V.

II. Proposed Changes to Prospective Payment rates For Inpatient Operating Costs for FY 1997

The basic methodology for determining prospective payment rates for inpatient operating costs is set forth at § 412.63 for hospitals located outside of Puerto Rico. The basic methodology for determining the prospective payment rates for inpatient operating costs for hospitals located in Puerto Rico is set forth at §§ 412.210 and 412.212. Below, we discuss the manner in which we are changing some of the factors used for determining the prospective payment rates. The Federal and Puerto Rico rate changes, once issued as final, will be effective with discharges occurring on or after October 1, 1996. As required by section 1886(d)(4)(C) of the Act, we must also adjust the DRG classifications and weighting factors for discharges in FY 1997.

In summary, the proposed standardized amounts set forth in Tables 1a and 1c of section V of this addendum reflect—

- Updates of 2.2 percent for all areas (that is, the market basket percentage increase of 2.7 percent minus 0.5 percentage points);
- An adjustment to ensure budget neutrality as provided for in sections 1886 (d)(4)(C)(iii) and (d)(3)(E) of the Act by applying new budget neutrality adjustment factors to the large urban and other standardized amounts;
- An adjustment to ensure budget neutrality as provided for in section 1886(d)(8)(D) of the Act by removing the FY 1996 budget neutrality factor and applying a revised factor; and
- An adjustment to apply the revised outlier offset by removing the FY 1996 outlier offsets and applying a new offset.

A. Calculation of Adjusted Standardized Amounts

1. Standardization of Base-Year Costs or Target Amounts

Section 1886(d)(2)(A) of the Act required the establishment of base-year cost data containing allowable operating costs per discharge of inpatient hospital services for each hospital. The preamble to the September 1, 1983 interim final rule (48 FR 39763) contains a detailed explanation of how base-year cost data were established in the initial development of standardized amounts for the prospective payment system and how they are used in computing the Federal rates.

Section 1886(d)(9)(B)(i) of the Act required that Medicare target amounts be determined for each hospital located in Puerto Rico for its cost reporting period beginning in FY 1987. The September 1, 1987 final rule contains a detailed explanation of how the target amounts were determined and how they are used in computing the Puerto Rico rates (52 FR 33043, 33066).

The standardized amounts are based on per discharge averages of adjusted hospital costs from a base period or, for Puerto Rico, adjusted target amounts from a base period, updated and otherwise adjusted in accordance with the provisions of section 1886(d) of the Act. Sections 1886 (d)(2)(C) and (d)(9)(B)(ii) of the Act required that the updated base-year per discharge costs and, for Puerto Rico, the updated target amounts, respectively, be standardized in order to remove from the cost data the effects of certain sources of variation in cost among hospitals. These include case mix, differences in area wage levels, cost of living adjustments for Alaska and Hawaii, indirect medical education costs, and payments to hospitals serving a disproportionate share of low-income patients.

Since the standardized amounts have already been adjusted for differences in case mix, wages, cost-of-living, indirect medical education costs, and payments to hospitals serving a disproportionate share of low-income patients, no additional adjustments for these factors for FY 1997 were made. That is, the standardization adjustments reflected in the FY 1997 standardized amounts are the same as those reflected in the FY 1996 standardized amounts.

Under sections 1886 (d)(2)(H) and (d)(3)(E) of the Act, in making payments under the prospective payment system, the Secretary estimates from time to time the proportion of costs that are wages and wage-related costs. Since October 1, 1990, when the market basket was last rebased, we have considered 71.4 percent of costs to be labor-related for purposes of the prospective payment system. As discussed in section IV of the preamble, we are proposing to use a rebased market basket effective for FY 1997. Based on the proposed rebased market basket, we are revising the labor and nonlabor proportions of the standardized amounts. Effective with discharges occurring on or after October 1, 1996, we are proposing a labor-related proportion of 71.2 percent and a nonlabor-related proportion of 28.8 percent. The standardized amounts in Table 1a of section V of this addendum have been recomputed to reflect the revised labor-related and nonlabor-related proportions. (We are revising the Puerto Rico standardized amounts by the average labor share in Puerto Rico of 82.8 percent. We are revising the discharged-weighted national

standardized amount to reflect the proportion of discharges in large urban and other areas from the FY 1995 MedPAR file.)

2. Computing Large Urban and Other Averages Within Geographic Areas

Section 1886(d)(3) of the Act requires the Secretary to compute two average standardized amounts for discharges occurring in a fiscal year: one for hospitals located in large urban areas and one for hospitals located in other areas. In addition, under sections 1886(d)(9) (B)(iii) and (C)(i) of the Act, the average standardized amount per discharge must be determined for hospitals located in urban and other areas in Puerto Rico. Hospitals in Puerto Rico are paid a blend of 75 percent of the applicable Puerto Rico standardized amount and 25 percent of a national standardized payment amount.

Section 1886(d)(2)(D) of the Act defines ''urban areas'' as those areas within a Metropolitan Statistical Area (MSA). A ''large urban area'' is defined as an urban area with a population of more than 1,000,000. In addition, section 4009(i) of Public Law 100–203 provides that a New England County Metropolitan Area (NECMA) with a population of more than 970,000 is classified as a large urban area. As required by section 1886(d)(2)(D) of the Act, population size is determined by the Secretary based on the latest population data published by the Bureau of the Census. Urban areas that do not meet the definition of a ''large urban area'' are referred to as ''other urban areas.'' Areas that are not included in MSAs are considered ''rural areas'' under section 1886(d)(2)(D). Payment for discharges from hospitals located in large urban areas will be based on the large urban standardized amount. Payment for discharges from hospitals located in other urban and rural areas will be based on the other standardized amount.

Based on 1995 population estimates published by the Bureau of the Census, 56 areas meet the criteria to be defined as large urban areas for FY 1997. These areas are identified by an asterisk in Table 4a.

Table 1a contains the two national standardized amounts that we are proposing be applicable to all hospitals, except for sole community hospitals and hospitals in Puerto Rico. For a number of years, Table 1b had been used to set forth the 18 regional standardized amounts applicable for hospitals located in census areas subject to the regional floor. However, as provided in section 1886(d)(1)(A)(iii)(II) of the Act, the regional floor expires effective with discharges occurring on or after October 1, 1996. Therefore, all hospitals (except sole community hospitals and hospitals in Puerto Rico) will be paid solely on the basis of the national standardized amounts. Under section 1886(d)(9)(A)(ii) of the Act, the national standardized payment amount applicable to hospitals in Puerto Rico consists of the discharge-weighted average of the national large urban standardized amount and the national other standardized amount (as set forth in Table 1a). The national average standardized amount for Puerto Rico is now set forth in Table 1b. This table also includes the two standardized amounts that would be applicable to most hospitals in Puerto Rico.

3. Updating the Average Standardized Amounts

In accordance with section 1886(d)(3)(A)(iv) of the Act, we are proposing to update the large urban and the other areas average standardized amounts for FY 1997 using the applicable percentage increases specified in section 1886(b)(3)(B)(i) of the Act. Section 1886(b)(3)(B)(i)(XII) of the Act specifies that, for hospitals in all areas, the update factor for the standardized amounts for FY 1997 is the market basket percentage increase minus 0.5 percentage points.

The percentage change in the market basket reflects the average change in the price of goods and services purchased by hospitals to furnish inpatient care. The most recent forecast of the proposed rebased hospital market basket increase for FY 1997 is 2.7 percent. For FY 1997, this yields an update to the average standardized amounts of 2.2 percent (2.7 percent minus 0.5 percent). (See section IV of this preamble of this proposed rule for a discussion of the market basket rebasing.)

As in the past, we are adjusting the FY 1996 standardized amounts to remove the effects of the FY 1996 geographic reclassifications and outlier payments before applying the FY 1997 updates. That is, we are increasing the standardized amounts to restore the reductions that were made for the effects of geographic reclassification and outliers. After including offsets to the standardized amounts for outliers and geographic reclassification, we estimate that there will be an actual increase of 2.3 percent to the large urban and other area standardized amounts.

Although the update factor for FY 1997 is set by law, we are required by section 1886(e)(3)(B) of the Act to report to Congress on our initial recommendation of update factors for FY 1997 for both prospective payment hospitals and hospitals excluded from the prospective payment system. For general information purposes, we have included the report to Congress as Appendix D to this proposed rule. Our proposed recommendation on the update factors (which is required by sections 1886 (e)(4)(A) and (e)(5)(A) of the Act), as well as our responses to ProPAC's recommendation concerning the update factor, are set forth as Appendix E to this proposed rule.

4. Other Adjustments to the Average Standardized Amounts

a. Recalibration of DRG Weights and Updated Wage Index—Budget Neutrality Adjustment. Section 1886(d)(4)(C)(iii) of the Act specifies that beginning in FY 1991, the annual DRG reclassification and recalibration of the relative weights must be made in a manner that ensures that aggregate payments to hospitals are not affected. As discussed in section II of the preamble, we normalized the recalibrated DRG weights by an adjustment factor, so that the average case weight after recalibration is equal to the average case weight prior to recalibration.

Section 1886(d)(3)(E) of the Act specifies that the hospital wage index must be updated on an annual basis beginning October 1, 1993. This provision also requires that any updates or adjustments to the wage index must be made in a manner that ensures that aggregate payments to hospitals are not affected by the change in the wage index.

To comply with the requirement of section 1886(d)(4)(C)(iii) of the Act that DRG reclassification and recalibration of the relative weights be budget neutral, and the requirement in section 1886(d)(3)(E) of the Act that the updated wage index be budget neutral, we compared aggregate payments using the FY 1996 relative weights and wage index to aggregate payments using the proposed FY 1997 relative weights and wage index. The same methodology was used for the FY 1996 budget neutrality adjustment. (See the discussion in the September 1, 1992 final rule (57 FR 39832).) Based on this comparison, we computed a budget neutrality adjustment factor equal to 0.998509. This budget neutrality adjustment factor is applied to the standardized amounts without removing the effects of the FY 1996 budget neutrality adjustment. We do not remove the prior budget neutrality adjustment because estimated aggregate payments after the changes in the DRG relative weights and wage index should equal estimated aggregate payments prior to the changes. If we

removed the prior year adjustment, we would not satisfy this condition.

In addition, we are proposing to continue to apply the same FY 1997 adjustment factor to the hospital-specific rates that are effective for cost reporting periods beginning on or after October 1, 1996, in order to ensure that we meet the statutory requirement that aggregate payments neither increase nor decrease as a result of the implementation of the FY 1997 DRG weights and updated wage index. (See the discussion in the September 4, 1990 final rule (55 FR 36073).)

b. Reclassified Hospitals—Budget Neutrality Adjustment. Section 1886(d)(8)(B) of the Act provides that certain rural hospitals are deemed urban effective with discharges occurring on or after October 1, 1988. In addition, section 1886(d)(10) of the Act provides for the reclassification of hospitals based on determinations by the Medicare Geographic Classification Review Board (MGCRB). Under section 1886(d)(10) of the Act, a hospital may be reclassified for purposes of the standardized amount or the wage index, or both.

Under section 1886(d)(8)(D) of the Act, the Secretary is required to adjust the standardized amounts so as to ensure that total aggregate payments under the prospective payment system after implementation of the provisions of sections 1886(d)(8) (B) and (C) and 1886(d)(10) of the Act are equal to the aggregate prospective payments that would have been made absent these provisions. To calculate this budget neutrality factor, we used historical discharge data to simulate payments, and compared total prospective payments (including IME and DSH payments) prior to any reclassifications to total prospective payments after reclassifications. We are applying an adjustment factor of 0.994059 to ensure that the effects of reclassification are budget neutral.

The adjustment factor is applied to the standardized amounts after removing the effects of the FY 1996 budget neutrality adjustment factor. We note that the proposed FY 1997 adjustment reflects wage index and standardized amount reclassifications approved by the MGCRB or the Administrator as of March 14, 1996. The effects of any additional reclassification changes resulting from appeals and reviews of the MGCRB decisions for FY 1997 or from a hospital's request for the withdrawal of a reclassification request will be reflected in the final budget neutrality adjustment required under section 1886(d)(8)(D) of the Act and published in the final rule for FY 1997.

c. Outliers. Section 1886(d)(5)(A) of the Act provides for payments in addition to the basic prospective payments for ''outlier'' cases, cases involving extraordinarily high costs (cost outliers) or long lengths of stay (day outliers). Section 1886(d)(3)(B) of the Act requires the Secretary to adjust both the large urban and other area national standardized amounts by the same factor to account for the estimated proportion of total DRG payments made to outlier cases. Similarly, section 1886(d)(9)(B)(iv) of the Act requires the Secretary to adjust the large urban and other standardized amounts applicable to hospitals in Puerto Rico by the same factor to account for the estimated proportion of total DRG payments made to outlier cases. Furthermore, under section 1886(d)(5)(A)(iv) of the Act, outlier payments for any year must be projected to be not less than 5 percent nor more than 6 percent of total payments based on DRG prospective payment rates.

Beginning with FY 1995, section 1886(d)(5)(A) of the Act requires the Secretary to phase out payments for day outliers (correspondingly, payments for cost outliers would increase). Under the requirements of section 1886(d)(5)(A)(v), the proportion of day outlier payments to total outlier payments is reduced from FY 1994 levels as follows: 75 percent of FY 1994 levels in FY 1995, 50 percent of FY 1994 levels in FY 1996, and 25 percent of FY 1994 levels in FY 1997. We estimated the FY 1994 proportion of day outlier payments to total outlier payments at 31.3 percent in our September 1, 1993 final rule (58 FR 46348). Thus, the proportion of day outlier payments to total outlier payments in FY 1997 will be approximately 8 percent (25 percent of 31.3 percent). For discharges occurring after September 30, 1997, the Secretary will no longer pay for day outliers under the provisions of section 1886(d)(5)(A)(i) of the Act.

i. Proposed FY 1997 Outlier Payment Policies, Including Outlier Thresholds. For FY 1996, the day outlier threshold is the geometric mean length of stay for each DRG plus the lesser of 23 days or 3.0 standard deviations. The marginal cost factor for day outliers (the percent of Medicare's average per diem payment paid for each outlier day) is 44 percent for FY 1996. The fixed loss cost outlier threshold is equal to the prospective payment for the DRG plus $15,150 ($13,800 for hospitals that have not yet entered the prospective payment system for capital-related costs). The marginal cost factor for cost outliers (the percent of costs paid after costs for the case exceed the threshold) is 80 percent. We applied an outlier adjustment to the FY 1996 standardized amounts of 0.949054 for the large urban and other areas rates and 0.9526 for the capital Federal rate.

For FY 1997, we propose to set the day outlier threshold at the geometric mean length of stay for each DRG plus the lesser of 24 days or 3.0 standard deviations. Section 1886(d)(5)(A)(iii) of the Act, as amended by section 13501(c)(3) of Public Law 103–66, provides that additional payments for day outlier cases may be reduced below the marginal cost of care to meet the requirements of section 1886(d)(5)(A)(v) of the Act. We are proposing to reduce the marginal cost factor for each outlier day from 44 percent to 35 percent in FY 1997. We estimate that our proposed policies will reduce the proportion of outlier payments paid as day outliers in FY 1997 to approximately 8 percent, in accordance with section 1886(d)(5)(A) of the Act.

We are also proposing a fixed loss cost outlier threshold in FY 1997 equal to the prospective payment rate for the DRG plus $11,050 ($10,075 for hospitals that have not yet entered the prospective payment system for capital-related costs). In addition, we are proposing to maintain the marginal cost factor for cost outliers at 80 percent.

In accordance with section 1886(d)(5)(A)(iv) of the Act, we calculated proposed outlier thresholds so that outlier payments are projected to equal 5.1 percent of total payments based on DRG prospective payment rates. In accordance with section 1886(d)(3)(E), we reduced the proposed FY 1997 standardized amounts by the same percentage to account for the projected proportion of payments paid to outliers.

As stated in the September 1, 1993 final rule (58 FR 46348), we establish outlier thresholds that are applicable to both inpatient operating costs and inpatient capital-related costs. When we modeled the combined operating and capital outlier payments, we found that using a common set of thresholds resulted in a higher percentage of outlier payments for capital-related costs than for operating costs. We project that the proposed thresholds for FY 1997 will result in outlier payments equal to 5.1 percent of operating DRG payments and 5.2 percent of capital payments based on the Federal rate.

Thus, the proposed outlier adjustment factors applied to the standardized amounts and the capital Federal rate for FY 1997 are as follows:

Operating Standardized Amounts	Capital Federal Rate
0.948968	0.9476

We would apply the proposed outlier adjustment factors after removing the effects of the FY 1996 outlier adjustment factors on the standardized amounts and the capital Federal rate.

ii. Other Changes Concerning Outliers. Table 5 of section V of this addendum contains the DRG relative weights, geometric and arithmetic mean lengths of stay, as well as the day outlier threshold for each DRG. When we recalibrate DRG weights, we set a threshold of 10 cases as the minimum number of cases required to compute a reasonable weight and geometric mean length of stay. DRGs that do not have at least 10 cases are considered to be low volume DRGs. For the low volume DRGs, we use the original geometric mean lengths of stay, because no arithmetic mean length of stay was calculated based on the original data.

Table 8a in section V of this addendum contains the updated Statewide average operating cost-to-charge ratios for urban hospitals and for rural hospitals to be used in calculating cost outlier payments for those hospitals for which the intermediary is unable to compute a reasonable hospital-specific cost-to-charge ratio. These Statewide average ratios would replace the ratios published in the September 1, 1995 final rule (60 FR 45922), effective October 1, 1996. Table 8b contains comparable Statewide average capital cost-to-charge ratios. These average ratios would be used to calculate cost outlier payments for those hospitals for which the intermediary computes operating cost-to-charge ratios lower than 0.24345 or greater than 1.30392 and capital cost-to-charge ratios lower than 0.013297 or greater than 0.19968. This range represents 3.0 standard deviations (plus or minus) from the mean of the log distribution of cost-to-charge ratios for all hospitals. We note that the cost-to-charge ratios in Tables 8a and 8b would be used for all cost reports settled during FY 1997 (regardless of the actual cost reporting period) when hospital-specific cost-to-charge ratios are either not available or outside the three standard deviations range.

iii. FY 1995 and FY 1996 Outlier Payments. In the September 1, 1995 final rule (59 FR 45408), we stated that, based on available data, we estimated that actual FY 1995 outlier payments would be approximately 4.0 percent of actual total DRG payments. This percentage was computed by simulating payments using actual FY *1994* bill data available at the time. That is, the estimate of actual outlier payments did not reflect actual FY 1995 bills but instead reflected the application of FY 1995 rates and policies to available FY 1994 bills. Our current estimate, using available FY 1995 bills, is that actual outlier payments for FY 1995 were approximately 3.7 percent of actual total DRG payments (lower than the 5.1 percent we projected in setting outlier policies for FY 1995). We note that the MedPAR file for FY 1995 discharges continues to be updated.

We currently estimate that actual outlier payments for FY 1996 will be approximately 4.2 percent of actual total DRG payments (lower than the 5.1 percent we projected in setting outlier policies for FY 1996). This estimate is based on simulations using the December 1995 update of the provider-specific file and the December 1995 update of the FY 1995 MedPAR file (discharge data for FY 1995 bills). We used these data to calculate an estimate of the actual outlier percentage for FY 1996 by applying FY 1996 rates and policies to available FY 1995 bills.

The following discussion addresses the methodology we use to set outlier thresholds for an upcoming fiscal year and also addresses possible explanations for the difference between projected and actual outlier payment percentages in recent years.

iv. Methodology for Setting Outlier Thresholds. In previous rulemaking documents, we have discussed the methodology for setting outlier thresholds as well as our periodic refinements to that methodology. In this document, we once again describe our methodology and analyze it to suggest some possible explanations for the recent differences between projected and actual outlier percentages. We invite comments and suggestions for further refinements to the methodology.

In General. In accordance with section 1886(d)(5)(A)(iv) of the Act, we set outlier thresholds so that outlier payments are expected (projected) to equal 5.1 percent of total payments based on DRG prospective payment rates. The databases used to calculate thresholds for an upcoming fiscal year include data on discharges from a previous fiscal year as well as hospital-specific data. We update the data every year. In setting the proposed FY 1997 outlier thresholds, we used the December 1995 update of the FY 1995 MedPAR file, which contains data on FY 1995 hospital inpatient discharges, and the December 1995 update of the provider-specific file, which contains information on hospital-specific payment parameters (such as cost-to-charge ratios).

The methodology for setting outlier thresholds for an upcoming fiscal year involves analyzing the set of hospital inpatient cases in the MedPAR file and simulating payments for those cases by using the payment rates and policies that would apply in the upcoming fiscal year. For example, in calculating the proposed thresholds for FY 1997, we used the proposed payment rates and policies for FY 1997 and simulated payments for the set of cases in the FY 1995 MedPAR file.

The computer simulation calculates ''payments''—outlier payments and total payments—for all discharges for a given set of outlier thresholds. In order to achieve established objectives (for example, the projected percentage of outlier payments relative to total DRG payments is 5.1 percent, and the projected percentage of outlier payments attributable to day outliers is 8 percent for FY 1997), the methodology involves an iterative process, that is, numerous successive simulations using alternative sets of outlier thresholds. In short, then, the outlier estimation methodology involves analyzing historical discharge data, simulating payments for the discharges in the database by using the payment rates that would apply in the upcoming fiscal year, and testing alternative sets of outlier thresholds until the simulations are consistent with established objectives.

Cost Inflation Factors. In setting outlier thresholds for an upcoming fiscal year, we need to calculate the ''costs'' for each case in our database. In the payment simulations, this ''cost'' for each case is used to determine, for a given cost outlier threshold, whether a case qualifies for additional outlier payments and the amount of any such payments. (As explained above, we test alternative sets of thresholds.)

The MedPAR file includes data on billed charges, and as part of the estimation methodology, we make adjustments to convert the charges to costs, including adjusting the data for inflation. In setting the proposed outlier thresholds for FY 1997, we analyzed data for FY 1995 discharges.

As we explained in the September 1, 1993 final rule (58 FR 46347), prior to FY 1994, we used a charge inflation factor to adjust charges to costs; for example, in setting outlier thresholds for FY 1993, we adjusted the FY 1991 MedPAR file charge data by a charge inflation factor for 2 years in order to estimate FY 1993 charges and then applied the applicable cost-to-charge

ratio. Beginning with FY 1994, we have used a cost inflation factor to estimate ''costs''; that is, we adjust the charges by the cost-to-charge ratio and then adjust the resulting costs for 2 years of cost inflation. This adjustment automatically accounts for any changes in the cost-to-charge ratios that may occur, since the relevant variable is the estimated ''costs'' for a given case.

In setting the final outlier thresholds for recent years immediately prior to FY 1995, we determined cost inflation factors by analyzing cost report information to calculate moving averages of cost inflation for prior periods. (For example, in setting the FY 1994 outlier thresholds, we analyzed cost reports for cost reporting periods beginning in FY 1988 through FY 1991 to calculate a cost inflation factor, that is, the average annual increase in cost per case, of 8.3 percent.) In doing so, we made an audit adjustment for any cost report that had not been settled, based on the average ratio of submitted to final cost report data. In setting the final outlier thresholds for FYs 1995 and 1996, we determined cost inflation factors by analyzing cost report information and calculating the change in cost per case for one year, rather than the average change in cost per case over more than one year.

In setting the proposed FY 1997 outlier thresholds, we used a cost inflation factor of 0.0 percent, because it is unclear whether FY 1997 ''costs'' will be higher or lower than costs reflected in the FY 1995 MedPAR file. Analysis of recent cost report information shows that cost per case increased slightly for cost reporting periods beginning in FY 1993 relative to those beginning in FY 1992, but decreased slightly in the following year (that is, for cost reporting periods beginning in FY 1994 relative to those beginning in FY 1993). We will reevaluate this factor when we develop the final rule for FY 1997. At that time, more recent data should be available for analysis, specifically, cost report data for cost reporting periods beginning in FY 1995.

Differences Between Projected and Actual Outlier Percentages. As explained above, the cost inflation factor is an important aspect of the methodology for setting outlier thresholds, and we believe the cost inflation factor is a major reason that in recent years the actual outlier percentages (the proportion of actual outlier payments to actual total DRG payments) have been lower than projected.

In determining the cost inflation factor, we analyze historical hospital cost report information, and there is necessarily a time lag of 2 to 3 years between the cost reporting period itself and the time when data for that cost reporting period become available. For example, in setting the FY 1994 outlier thresholds, we used a cost inflation factor of 8.3 percent, derived from cost reports for cost reporting periods beginning in FY 1988 through FY 1991. We adjusted the charges from the FY 1992 MedPAR bills by the cost-to-charge ratio and then adjusted the resulting FY 1992 costs for 2 years of cost inflation (costs multiplied by 1.083 multiplied by 1.083) to estimate ''FY 1994 costs.''

However, analysis of more recent cost report information shows that cost per case increased at a much lower rate of 0.97 percent in cost reporting periods between FY 1992 and FY 1993 and actually decreased 1.77 percent in cost reporting periods between FY 1993 and FY 1994. In effect, we ''overestimated'' costs by approximately 15.4 percent. Since costs did not increase at nearly the rate we expected, actual costs in FY 1994 proved to be lower than those reflected in the simulations used to set the thresholds for FY 1994; accordingly, the proportion of outlier payments was lower than expected.

Another aspect of the outlier methodology that may have contributed to the difference between projected and actual outlier percentages concerns the payment adjustments for indirect medical education (IME) and disproportionate share hospitals (DSH). As indicated in previous rulemaking documents, for purposes of determining outlier payments, we standardize a hospital's costs for IME and DSH adjustments; that is, we reduce the hospital's costs for a given discharge to account for IME and DSH payments. The ''standardized''≥ cost for a discharge is calculated by taking total costs for the discharge and dividing it by the sum of one plus the hospital's DSH factor plus the hospital's IME factor. Therefore, the higher the IME and DSH factors, the more costs are reduced by standardization.

The factors used for purposes of setting thresholds are taken from the most recent provider-specific file. In setting the proposed FY 1997 outlier thresholds, we used information from the December 1995 update of the provider-specific file. We standardized the costs for each discharge in our database to account for IME and DSH adjustments. The proposed outlier thresholds reflect these standardized costs.

While we use the latest, most up-to-date sources of information, the ''projected'' IME and DSH factors (the factors used to set thresholds for a fiscal year) may differ from the actual IME and DSH factors used to make payments in that fiscal year. If the ''projected'' factors used to standardize costs for a given discharge are ''too low,'' then standardization does not ''sufficiently'' reduce the costs for that discharge and the resulting standardized cost is ''too high.'' If the standardized costs for the discharges analyzed to set outlier thresholds are generally ''too high,'' then in turn the thresholds would be too high; consequently, this might result in a lower than expected proportion of outlier payments. Analysis shows that, for FY 1994 for example, the ''projected'' IME and DSH factors were on average lower than the actual factors.

Conclusion. As we have done since the inception of the prospective payment system, we determine outlier thresholds based on estimates before the beginning of each fiscal year. The methodology we use involves analysis of the best data available at the time thresholds are established; however, by their nature, projections are imprecise and may differ from actual payment data for any number of reasons. We discussed above some of the numerous factors that affect payment and why these particular factors may have contributed to the difference between projected and actual outlier payments in recent years. (See also, for example, the discussion in the September 1, 1995 final rule (60 FR 45855).) We note that any difference between projected and actual outlier payment percentages in a given year does not affect standardized amounts in future years.

We continue to explore refinements to the methodology for setting outlier thresholds. We welcome comments and suggestions regarding these issues.

B. Adjustments for Area Wage Levels and Cost of Living

The adjusted standardized amounts are divided into labor and nonlabor portions. Tables 1a and 1c, as set forth in this addendum, contain the actual labor-related and nonlabor-related shares that will be used to calculate the prospective payment rates for hospitals located in the 50 States, the District of Columbia, and Puerto Rico. This section addresses two types of adjustments to the standardized amounts that are made in determining the prospective payment rates as described in this addendum.

1. Adjustment for Area Wage Levels

Sections 1886(d)(3)(E) and 1886(d)(9)(C)(iv) of the Act require that an adjustment be made to the labor-related portion of the prospective payment rates to account for area differences in hospital wage levels. This

adjustment is made by multiplying the labor-related portion of the adjusted standardized amounts by the appropriate wage index for the area in which the hospital is located. In section III of the preamble, we discuss certain revisions we are making to the wage index. This index is set forth in Tables 4a through 4e of this addendum.

2. Adjustment for Cost of Living in Alaska and Hawaii

Section 1886(d)(5)(H) of the Act authorizes an adjustment to take into account the unique circumstances of hospitals in Alaska and Hawaii. Higher labor-related costs for these two States are taken into account in the adjustment for area wages described above. For FY 1997, we propose to adjust the payments for hospitals in Alaska and Hawaii by multiplying the nonlabor portion of the standardized amounts by the appropriate adjustment factor contained in the table below. If the Office of Personnel Management releases revised cost-of-living adjustment factors before August 1, 1996, we will publish them in the final rule and use them in determining FY 1997 payments.

TABLE OF COST-OF-LIVING ADJUSTMENT FACTORS, ALASKA AND HAWAII HOSPITALS

Alaska—All areas	1.25
Hawaii:	
County of Honolulu	1.225
County of Hawaii	1.15
County of Kauai	1.20
County of Maui	1.225
County of Kalawao	1.225

(The above factors are based on data obtained from the U.S. Office of Personnel Management.)

C. DRG Relative Weights

As discussed in section II of the preamble, we have developed a classification system for all hospital discharges, assigning them into DRGs, and have developed relative weights for each DRG that reflect the resource utilization of cases in each DRG relative to Medicare cases in other DRGs. Table 5 of section V of this addendum contains the relative weights that we propose to use for discharges occurring in FY 1997. These factors have been recalibrated as explained in section II of the preamble.

D. Calculation of Prospective Payment Rates for FY 1997

General Formula for Calculation of Prospective Payment Rates for FY 1997

Prospective payment rate for all hospitals located outside Puerto Rico except sole community hospitals = Federal rate.

Prospective payment rate for sole community hospitals = Whichever of the following rates yields the greatest aggregate payment: 100 percent of the Federal rate, 100 percent of the updated FY 1982 hospital-specific rate, or 100 percent of the updated FY 1987 hospital-specific rate. Prospective payment rate for Puerto Rico = 75 percent of the Puerto Rico rate + 25 percent of a discharge-weighted average of the national large urban standardized amount and the national other standardized amount.

1. Federal Rate

For discharges occurring on or after October 1, 1996 and before October 1, 1997, except for sole community hospitals and hospitals in Puerto Rico, the hospital's payment is based exclusively on the Federal national rate. Section 1866(d)(1)(A)(iii) of the Act provides that the Federal rate is comprised of 100 percent of the Federal national rate.

The payment amount is determined as follows:

Step 1—Select the appropriate national standardized amount considering the type of hospital and designation of the hospital as large urban or other (see Tables 1a, section V of this addendum).

Step 2—Multiply the labor-related portion of the standardized amount by the applicable wage index for the geographic area in which the hospital is located (see Tables 4a, 4b, and 4c, section V of this addendum).

Step 3—For hospitals in Alaska and Hawaii, multiply the nonlabor-related portion of the standardized amount by the appropriate cost-of-living adjustment factor.

Step 4—Add the amount from Step 2 and the nonlabor-related portion of the standardized amount (adjusted if appropriate under Step 3).

Step 5—Multiply the final amount from Step 4 by the relative weight corresponding to the appropriate DRG (see Table 5, section V of this addendum).

2. Hospital-Specific Rate (Applicable Only to Sole Community Hospitals)

Sections 1886(d)(5)(D)(i) and (b)(3)(C) of the Act provide that sole community hospitals are paid based on whichever of the following rates yields the greatest aggregate payment: the Federal rate, the updated hospital-specific rate based on FY 1982 cost per discharge, or the updated hospital-specific rate based on FY 1987 cost per discharge.

Hospital-specific rates have been determined for each of these hospitals based on both the FY 1982 cost per discharge and the FY 1987 cost per discharge. For a more detailed discussion of the calculation of the FY 1982 hospital-specific rate and the FY 1987 hospital-specific rate, we refer the reader to the September 1, 1983 interim final rule (48 FR 39772); the April 20, 1990 final rule with comment (55 FR 15150); and the September 4, 1990 final rule (55 FR 35994).

a. Updating the FY 1982 and FY 1987 Hospital-Specific Rates for FY 1997. We are proposing to increase the hospital-specific rates by 2.2 percent (the hospital market basket percentage increase minus 0.5 percentage points) for sole community hospitals located in all areas in FY 1997. Section 1886(b)(3)(C)(ii) of the Act provides that the update factor applicable to the hospital-specific rates for sole community hospitals equals the update factor provided under section 1886(b)(3)(B)(ii) of the Act, which, for FY 1997, is the market basket rate of increase minus 0.5 percentage points.

b. Calculation of Hospital-Specific Rate. For sole community hospitals, the applicable FY 1997 hospital-specific rate would be calculated by multiplying a hospital's hospital-specific rate for the preceding fiscal year by the applicable update factor (2.2 percent), which is the same as the update for all prospective payment hospitals. In addition, the hospital-specific rate would be adjusted by the budget neutrality adjustment factor (that is, 0.998509) as discussed in section II.A.4.a of this Addendum. This resulting rate would be used in determining under which rate a sole community hospital is paid for its discharges beginning on or after October 1, 1996, based on the formula set forth above.

3. General Formula for Calculation of Prospective Payment Rates for Hospitals Located in Puerto Rico Beginning On or After October 1, 1996 and Before October 1, 1997.

a. Puerto Rico Rate. The Puerto Rico prospective payment rate is determined as follows:

Step 1—Select the appropriate adjusted average standardized amount considering the large urban or other designation of the hospital (see Table 1b, section V of the addendum).

Step 2—Multiply the labor-related portion of the standardized amount by the appropriate wage index (see Tables 4a and 4b, section V of the addendum).

Step 3—Add the amount from Step 2 and the nonlabor-related portion of the standardized amount.

Step 4—Multiply the result in Step 3 by 75 percent.

Step 5—Multiply the amount from Step 4 by the appropriate DRG relative weight (see Table 5, section V of the addendum).

b. National Rate. The national prospective payment rate is determined as follows:

Step 1—Multiply the labor-related portion of the national average standardized amount (see Table 1b, section V of the addendum) by the appropriate wage index.

Step 2—Add the amount from Step 1 and the nonlabor-related portion of the national average standardized amount.

Step 3—Multiply the result in Step 2 by 25 percent.

Step 4—Multiply the amount from Step 3 by the appropriate DRG relative weight (see Table 5, section V of the addendum).

The sum of the Puerto Rico rate and the national rate computed above equals the prospective payment for a given discharge for a hospital located in Puerto Rico.

III. Proposed Changes to Payment Rates for Inpatient Capital-Related Costs for FY 1997

The prospective payment system for hospital inpatient capital-related costs was implemented for cost reporting periods beginning on or after October 1, 1991. Effective with that cost reporting period and during a 10-year transition period extending through FY 2001, hospital inpatient capital-related costs are paid on the basis of an increasing proportion of the capital prospective payment system Federal rate and a decreasing proportion of a hospital's historical costs for capital.

The basic methodology for determining Federal capital prospective rates is set forth at §§ 412.308 through 412.352. Below we discuss the factors that we used to determine the proposed Federal rate and the hospital-specific rates for FY 1997. The rates will be effective for discharges occurring on or after October 1, 1996.

For FY 1992, we computed the standard Federal payment rate for capital-related costs under the prospective payment system by updating the FY 1989 Medicare inpatient capital cost per case by an actuarial estimate of the increase in Medicare inpatient capital costs per case. Each year after FY 1992 we update the standard Federal rate, as provided in § 412.308(c)(1), to account for capital input price increases and other factors. Also, § 412.308(c)(2) provides that the Federal rate is adjusted annually by a factor equal to the estimated proportion of outlier payments under the Federal rate to total capital payments under the Federal rate. Section 412.308(c)(3) further requires that the Federal rate be reduced by an adjustment factor equal to the estimated proportion of payments for exceptions under § 412.348, and § 412.308(c)(4)(ii) requires that the Federal rate be adjusted so that the annual DRG reclassification and the recalibration of DRG weights and changes in the geographic adjustment factor are budget neutral. For FY 1992 through FY 1995, § 412.352 required that the Federal rate also be adjusted by a budget neutrality factor so that aggregate payments for inpatient hospital capital costs were projected to equal 90 percent of the payments that would have been made for capital-related costs on a reasonable cost basis during the fiscal year. That provision expired in FY 1996.

The hospital-specific rate for each hospital was calculated by dividing the hospital's Medicare inpatient capital-related costs for a specified base year by its Medicare discharges (adjusted for transfers), and dividing the result by the hospital's case mix index (also adjusted for transfers). The resulting case-mix adjusted average cost per discharge was then updated to FY 1992 based on the national average increase in Medicare's inpatient capital cost per discharge and adjusted by the exceptions payment adjustment factor and the budget neutrality adjustment factor to yield the FY 1992 hospital-specific rate. The hospital-specific rate is updated each year after FY 1992 for inflation and for changes in the exceptions payment adjustment factor. For FY 1992 through FY 1995, the hospital-specific rate was also adjusted by a budget neutrality adjustment factor.

To determine the appropriate budget neutrality adjustment factors and the exceptions payment adjustment factor, we developed a dynamic model of Medicare inpatient capital-related costs, that is, a model that projects changes in Medicare inpatient capital-related costs over time. With the expiration of the budget neutrality provision, the model is still used to estimate the exceptions payment adjustment and other factors. The model and its application are described more fully in Appendix B.

In accordance with section 1886(d)(9)(A) of the Act, under the prospective payment system for inpatient operating costs, hospitals located in Puerto Rico are paid for operating costs under a special payment formula. These hospitals are paid a blended rate that is comprised of 75 percent of the applicable standardized amount specific to Puerto Rico hospitals and 25 percent of the applicable national average standardized amount. Section 412.374 provides for the use of this blended payment system for payments to Puerto Rico hospitals under the prospective payment system for inpatient capital-related costs. Accordingly, for capital-related costs we compute a separate payment rate specific to Puerto Rico hospitals using the same methodology used to compute the national Federal rate for capital. Hospitals in Puerto Rico are paid based on 75 percent of the Puerto Rico rate and 25 percent of the Federal rate.

A. Determination of Federal Inpatient Capital-Related Prospective Payment Rate Update

For FY 1996, the Federal rate is $461.96. With the changes we are proposing to the factors used to establish the Federal rate, the proposed FY 1997 Federal rate is $441.84.

In the discussion that follows, we explain the factors that were used to determine the proposed FY 1997 Federal rate. In particular, we explain why the FY 1997 Federal rate has decreased 4.36 percent compared to the FY 1996 Federal rate. Nevertheless, as explained in section VII of Appendix A, capital payments per case are estimated to increase 4.45 percent. Taking into account the effects of increases in projected discharges, we also estimate that aggregate capital payments will increase 7.28 percent.

The major factor contributing to the decrease in the proposed FY 1997 rate in comparison to the FY 1996 rate is the change in the exceptions reduction factor. We have expected the number and amount of exceptions payments generally to increase throughout the transition period.

Total payments to hospitals under the prospective payment system are relatively insensitive to changes in the capital prospective payments. Since capital payments constitute about 10 percent of hospital payments, a 1 percent change in the capital Federal rate yields only about 0.1 percent change in actual payments to hospitals. Aggregate payments under the capital prospective payment transition system are estimated to increase in FY 1997 compared to FY 1996. Specifically, we estimate that aggregate payments in FY 1997 will be 7.28 percent higher than they were in FY 1996. Changes in aggregate payments include changes in capital payments per discharge and changes in the number of discharges. Under the prospective payment system for capital-related costs, payments per discharge (or case) are estimated to increase 4.45 percent in FY 1997 compared to FY 1996.

1. Standard Federal Rate Update

Section 412.308(c)(1) has provided that the standard Federal rate is updated on the basis of an analytical framework

that takes into account changes in a capital input price index and other factors. The update framework consists of a capital input price index (CIPI) and several policy adjustment factors. Specifically, we have adjusted the projected CIPI rate of increase as appropriate each year for case-mix index related changes, for intensity, and for errors in previous CIPI forecasts. The proposed update factor for FY 1997 under that framework is 1.0 percent. This proposal is based on a projected 1.0 percent increase in the CIPI, and on policy adjustment factors of zero. We explain the basis for the FY 1997 CIPI projection in section IV.B of the preamble to this proposed rule. Here we describe the policy adjustments that have been applied.

The case-mix index (CMI) is the measure of the average DRG weight for cases paid under the prospective payment system. Because the DRG weight determines the prospective payment for each case, any percentage increase in the CMI corresponds to an equal percentage increase in hospital payments.

The CMI can change for any of several reasons: because the average resource use of Medicare patients changes (''real'' case-mix change); because changes in hospital coding of patient records result in higher weight DRG assignments (''coding effects''); and because the annual DRG reclassification and recalibration changes may not be budget neutral (''reclassification effect''). We define real case-mix change as actual changes in the mix (and resource requirements) of Medicare patients as opposed to changes in coding behavior that result in assignment of cases to higher-weighted DRGs but do not reflect higher resource requirements. In the update framework for the prospective payment system for operating costs, we adjust the update upwards to allow for real case-mix change, but remove the effects of coding changes on the CMI. We also remove the effect on total payments of prior changes to the DRG classifications and relative weights, in order to retain budget neutrality for all CMI-related changes other than patient severity. (For example, we adjusted for the effects of the FY 1992 DRG reclassification and recalibration as part of our FY 1994 update recommendation.) The operating adjustment consists of a reduction for total observed case-mix change, an increase for the portion of case-mix change that we determine is due to real case-mix change rather than coding modifications, and an adjustment for the effect of prior DRG reclassification and recalibration changes. We have adopted this CMI adjustment in the capital update framework as well.

For FY 1997, we are projecting a 1.6 percent increase in the case-mix index. We estimate that real case-mix increase will equal projected case-mix increase in FY 1997. We do not anticipate any changes in coding behavior in our projected case-mix change. We explain the basis for this determination in Appendix D to this proposed rule. The proposed net adjustment for case-mix change in FY 1997 is therefore 0.0 percentage points.

We estimate that DRG reclassification and recalibration resulted in a 0.0 percent change in the case mix when compared with the case-mix index that would have resulted if we had not made the reclassification and recalibration changes to the DRGs.

The current operating update framework contains an adjustment for forecast error. The input price index forecast is based on historical trends and relationships ascertainable at the time the update factor is established for the upcoming year. In any given year there may be unanticipated price fluctuations that may result in differences between the actual increase in prices faced by hospitals and the forecast used in calculating the update factors. In setting a prospective payment rate under the proposed framework, we make an adjustment for forecast error only if our estimate of the capital input price index rate of increase for any year is off by 0.25 percentage points or more. There is a 2-year lag between the forecast and the measurement of the forecast error. Thus, for example, we would adjust for a forecast error made in FY 1996 through an adjustment to the FY 1998 update. Because we only introduced this analytical framework in FY 1996, FY 1998 is the first year in which a forecast error adjustment could be required.

Under the capital prospective payment system framework, we also make an adjustment for changes in intensity. We calculate this adjustment using the same methodology and data as in the framework for the operating prospective payment system. The intensity factor for the operating update framework reflects how hospital services are utilized to produce the final product, that is, the discharge. This component accounts for changes in the use of quality-enhancing services, changes in within-DRG severity, and expected modification of practice patterns to remove cost-ineffective services.

We calculate case-mix constant intensity as the change in total charges per admission, adjusted for price level changes (the CPI hospital component) and changes in real case mix. The use of total charges in the calculation of the proposed intensity factor makes it a total intensity factor, that is, charges for capital services are already built into the calculation of the factor. We have therefore incorporated the intensity adjustment from the operating update framework into the capital update framework. In the absence of reliable estimates of the proportions of the overall annual intensity increases that are due, respectively, to ineffective practice patterns and to the combination of quality-enhancing new technologies and within-DRG complexity, we assume, as in the revised operating update framework, that one-half of the annual increase is due to each of these factors. The capital update framework thus provides an add-on to the input price index rate of increase of one-half of the estimated annual increase in intensity to allow for within-DRG severity increases and the adoption of quality-enhancing technology.

For FY 1997, we have developed a Medicare-specific intensity measure based on a five-year average using FY 1991-1995. In determining case-mix constant intensity, we found that observed case-mix increase was 2.8 percent in FY 1991, 1.8 percent in FY 1992, 0.9 percent in FY 1993, 0.8 percent in FY 1994, and 1.6 percent in FY 1995. For FY 1991 and FY 1992, we estimate that real case-mix increase was 1.0 to 1.4 percent each year. The estimate for those years is supported by past studies of case-mix change by the RAND Corporation. The most recent study was ''Has DRG Creep Crept Up? Decomposing the Case Mix Index Change Between 1987 and 1988'' by G.M. Carter, J.P. Newhouse, and D.A. Relles, R-4098-HCFA/ProPAC (1991). The study suggested that real case-mix change was not dependent on total change, but was rather a fairly steady 1.0 to 1.5 percent per year. We use 1.4 percent as the upper bound because the RAND study did not take into account that hospitals may have induced doctors to document medical records more completely in order to improve payment. Following that study, we consider up to 1.4 percent of observed case-mix change as real for FY 1991 through FY 1994. As discussed above, we have determined that all of the observed case-mix increase for FY 1995 is real.

Given estimates of real case-mix increase of 1.0 percent for FY 1991 and FY 1992, 0.9 percent for FY 1993, 0.8 percent for FY 1994, and 1.6 percent for FY 1995, we estimate that case-mix constant intensity declined by an

average 1.1 percent during FY 1991 through FY 1995, for a cumulative decrease of 5.6 percent. If we assume that real case-mix increase was 1.4 percent for FY 1991 and FY 1992, 0.9 percent for FY 1993, 0.8 percent for FY 1994, and 1.6 percent for FY 1995, we estimate that case-mix constant intensity declined by an average 1.2 percent during FY 1991 through FY 1995, for a cumulative decrease of 5.9 percent. Since we estimate that intensity has declined during that period, we are recommending a 0.0 percent intensity adjustment for FY 1997.

2. Outlier Payment Adjustment Factor

Section 412.312(c) establishes a unified outlier methodology for inpatient operating and inpatient capital-related costs. A single set of thresholds is used to identify outlier cases for both inpatient operating and inpatient capital-related payments. Outlier payments are made only on the portion of the Federal rate that is used to calculate the hospital's inpatient capital-related payments (for example, 60 percent for cost reporting periods beginning in FY 1997 for hospitals paid under the fully prospective methodology). Section 412.308(c)(2) provides that the standard Federal rate for inpatient capital-related costs be reduced by an adjustment factor equal to the estimated proportion of outlier payments under the Federal rate to total inpatient capital-related payments under the Federal rate. The outlier thresholds are set so that operating outlier payments are projected to be 5.1 percent of total operating DRG payments. The inpatient capital-related outlier reduction factor reflects the inpatient capital-related outlier payments that would be made if all hospitals were paid according to 100 percent of the Federal rate. For purposes of calculating the outlier thresholds and the outlier reduction factor, we model all hospitals as if paid 100 percent of the Federal rate because, as explained above, outlier payments are made only on the portion of the Federal rate that is included in the hospital's inpatient capital-related payments.

In the September 1, 1995 final rule, we estimated that outlier payments for capital in FY 1996 would equal 4.64 percent of inpatient capital-related payments based on the Federal rate. Accordingly, we applied an outlier adjustment factor of 0.9536 to the Federal rate. Based on the thresholds as set forth in section II.A.4.d of this Addendum, we estimate that outlier payments for capital will equal 5.24 percent of inpatient capital-related payments based on the Federal rate in FY 1997. We are, therefore, proposing an outlier adjustment factor of 0.9476 to the Federal rate. Thus, estimated capital outlier payments for FY 1997 represent a higher percentage of total capital standard payments than in FY 1996.

The outlier reduction factors are not built permanently into the rates; that is, they are not applied cumulatively in determining the Federal rate. Therefore, the proposed net change in the outlier adjustment to the Federal rate for FY 1997 is 0.9937 (0.9476/0.9536). Thus, the outlier adjustment decreases the FY 1997 Federal rate by 0.63 percent (0.9937 - 1) compared with the FY 1996 outlier adjustment.

3. Budget Neutrality Adjustment Factor for Changes in DRG Classifications and Weights and the Geographic Adjustment Factor

Section 412.308(c)(4)(ii) requires that the Federal rate be adjusted so that aggregate payments for the fiscal year based on the Federal rate after any changes resulting from the annual DRG reclassification and recalibration and changes in the geographic adjustment factor are projected to equal aggregate payments that would have been made on the basis of the Federal rate without such changes. We use the actuarial model described in Appendix B to estimate the aggregate payments that would have been made on the basis of the Federal rate without changes in the DRG classifications and weights and in the geographic adjustment factor. We also use the model to estimate aggregate payments that would be made on the basis of the Federal rate as a result of those changes. We then use these figures to compute the adjustment required to maintain budget neutrality for changes in DRG weights and in the geographic adjustment factor.

For FY 1996, we calculated a GAF/DRG budget neutrality factor of 0.9994. For FY 1997, we are proposing a GAF/DRG budget neutrality factor of 0.9992. The GAF/DRG budget neutrality factors are built permanently into the rates; that is, they are applied cumulatively in determining the Federal rate. This follows from the requirement that estimated aggregate payments each year be no more than they would have been in the absence of the annual DRG reclassification and recalibration and changes in the geographic adjustment factor. The proposed incremental change in the adjustment from FY 1996 to FY 1997 is 0.9992. The proposed cumulative change in the rate due to this adjustment is 1.0017 (the product of the incremental factors for FY 1993, FY 1994, FY 1995, FY 1996 and the proposed incremental factor for FY 1997:
$0.9980 \times 1.0053 \times 0.9998 \times 0.9994 \times 0.9992 = 1.0017$).

This factor accounts for DRG reclassifications and recalibration and for changes in the geographic adjustment factor. It also incorporates the effects on the geographic adjustment factor of FY 1997 geographic reclassification decisions made by the MGCRB compared to FY 1996 decisions. However, it does not account for changes in payments due to changes in the disproportionate share and indirect medical education adjustment factors or in the large urban add-on.

4. Exceptions Payment Adjustment Factor

Section 412.308(c)(3) requires that the standard Federal rate for inpatient capital-related costs be reduced by an adjustment factor equal to the estimated proportion of additional payments for exceptions under § 412.348 relative to total payments under the hospital-specific rate and Federal rate. We use the model originally developed for determining the budget neutrality adjustment factor to determine the exceptions payment adjustment factor. We describe that model in Appendix B to this proposed rule.

For FY 1996, we estimated that exceptions payments would equal 1.51 percent of aggregate payments based on the Federal rate and the hospital-specific rate. Therefore, we applied an exceptions reduction factor of 0.9849 (1–0.0151) in determining the Federal rate. For this proposed rule, we estimate that exceptions payments for FY 1997 will equal 6.07 percent of aggregate payments based on the Federal rate and the hospital-specific rate. We are, therefore, proposing an exceptions payment reduction factor of 0.9393 to the Federal rate for FY 1997.

The proposed exceptions reduction factor for FY 1997 is thus 4.63 percent lower than the factor for FY 1996. We have expected the number and amount of exceptions payments generally to increase throughout the transition period.

The exceptions reduction factors are not built permanently into the rates; that is, the factors are not applied cumulatively in determining the Federal rate. Therefore, the proposed net adjustment to the FY 1997 Federal rate is 0.9393/0.9849, or 0.9537.

5. Standard Capital Federal Rate for FY 1997

For FY 1996, the capital Federal rate was $461.96. With the changes we are proposing to the factors used to establish the Federal rate, the FY 1997

Federal rate would be $441.84. The proposed Federal rate for FY 1997 was calculated as follows:

- The proposed FY 1997 update factor is 1.0100, that is, the proposed update is 1.00 percent.
- The proposed FY 1997 budget neutrality adjustment factor that is applied to the standard Federal payment rate for changes in the DRG relative weights and in the geographic adjustment factor is 0.9992.
- The proposed FY 1997 outlier adjustment factor is 0.9476.
- The proposed FY 1997 exceptions payments adjustment factor is 0.9393.

Since the Federal rate has already been adjusted for differences in case mix, wages, cost of living, indirect medical education costs, and payments to hospitals serving a disproportionate share of low-income patients, we propose to make no additional adjustments in the standard Federal rate for these factors other than the budget neutrality factor for changes in the DRG relative weights and the geographic adjustment factor.

We are providing a chart that shows how each of the factors and adjustments for FY 1997 affected the computation of the proposed FY 1997 Federal rate in comparison to the FY 1996 Federal rate. The proposed FY 1997 update factor has the effect of increasing the Federal rate by 1.00 percent compared to the rate in FY 1996, while the proposed geographic and DRG budget neutrality factor has the effect of decreasing the Federal rate by 0.08 percent. The proposed FY 1997 outlier adjustment factor has the effect of decreasing the Federal rate by 0.63 percent compared to FY 1996. The proposed FY 1997 exceptions reduction factor has the effect of decreasing the Federal rate by 4.63 percent compared to the exceptions reduction for FY 1996. The combined effect of all the proposed changes is to decrease the proposed Federal rate by 4.36 percent compared to the Federal rate for FY 1996.

COMPARISON OF FACTORS AND ADJUSTMENTS: FY 1996 FEDERAL RATE AND PROPOSED FY 1997 FEDERAL RATE

		Change	Percent change
Update factor: [1]			
FY 1996	1.0120	.....	.....
Proposed FY 1997	1.0100	1.0100	1.00
GAF/DRG adjustment factor [1]	.....		
FY 1996	0.9994	.....	.....
Proposed FY 1997	0.9992	0.9992	−0.08
Outlier adjustment factor: [2]			
FY 1996	0.9536	.....	.....
Proposed FY 1997	0.9476	0.9937	−0.63
Exceptions adjustment factor: [2]			
FY 1996	0.9849	.....	.....
Proposed FY 1997	0.9393	0.9537	−4.63
Federal Rate:			
FY 1996	$461.96	.....	.....
Proposed FY 1997	$441.84	0.9564	−4.36

[1] The update factor and the GAF/DRG budget neutrality factors are built permanently into the rates. Thus, for example, the incremental change from FY 1996 to FY 1997 resulting from the application of the 0.9992 GAF/DRG budget neutrality factor for FY 1997 is 0.9992.

[2] The outlier reduction factor and the exceptions reduction factor are not built permanently into the rates; that is, these factors are not applied cumulatively in determining the rates. Thus, for example, the net change resulting from the application of the FY 1997 exceptions reduction factor is 0.9393/0.9849, or 0.9537.

6. Special Rate for Puerto Rico Hospitals

For FY 1996, the special rate for Puerto Rico hospitals was $355.35. With the changes we are proposing to the factors used to determine the rate, the proposed FY 1997 special rate for Puerto Rico would be $339.87.

B. Determination of Hospital-Specific Rate Update

Section 412.328(e) of the regulations provides that the hospital-specific rate for FY 1997 be determined by adjusting the FY 1996 hospital-specific rate by the following factors:

1. Hospital-Specific Rate Update Factor

The hospital-specific rate is updated in accordance with the update factor for the standard Federal rate determined under § 412.308(c)(1). For FY 1997, we are proposing that the hospital-specific rate be updated by a factor of 1.0100.

2. Exceptions Payment Adjustment Factor

For FY 1992 through FY 2001, the updated hospital-specific rate is multiplied by an adjustment factor to account for estimated exceptions payments for capital-related costs under § 412.348, determined as a proportion of the total amount of payments under the hospital-specific rate and the Federal rate. For FY 1997, we estimate that exceptions payments will be 6.07 percent of aggregate payments based on the Federal rate and the hospital-specific rate. We therefore propose that the updated hospital-specific rate be reduced by a factor of 0.9393. The exceptions reduction factors are not built permanently into the rates; that is, the factors are not applied cumulatively in determining the hospital-specific rate. Therefore, the proposed net adjustment to the FY 1997 hospital-specific rate is 0.9393/0.9849, or 0.9537.

3. Net Change to Hospital-Specific Rate

We are providing a chart to show the net change to the hospital-specific rate. The chart shows the factors for FY 1996 and FY 1997 and the net adjustment for each factor. It also shows that the proposed cumulative net adjustment from FY 1996 to FY 1997 is 0.9632, which represents a proposed decrease of 3.68 percent to the hospital-specific rate. The proposed FY 1997 hospital-specific rate for each hospital is determined by multiplying the FY 1996 hospital-specific rate by the cumulative net adjustment of 0.9632.

PROPOSED FY 1997 UPDATE AND ADJUSTMENTS TO HOSPITAL-SPECIFIC RATES

		Net adjustment	Percent change
Update factor:			
FY 1996	1.0120	.....	.....
Proposed FY 1997	1.0100	1.0100	1.00
Exceptions payment adjustment factor:			
FY 1996	0.9849	.....	.....
Proposed FY 1997	0.9393	0.9537	−4.63
Cumulative adjustments:			
FY 1996	0.9967	.....	.....
Proposed FY 1997	0.9601	0.9632	−3.68

Note: The update factor for the hospital-specific rate is applied cumulatively in determining the rates. Thus, the incremental increase in the update factor from FY 1996 to FY 1997 is 1.0100. In contrast, the exceptions payment adjustment factor is not applied cumulatively. Thus, for example, the incremental increase in the exceptions reduction factor from FY 1996 to FY 1997 is 0.9393/0.9849, or 0.9537.

C. Calculation of Inpatient Capital-Related Prospective Payments for FY 1997

During the capital prospective payment system transition period, a hospital is paid for the inpatient capital-related costs under one of two alternative payment methodologies: the fully prospective payment methodology or the hold-harmless methodology. The payment methodology applicable to a particular hospital is determined when a hospital comes under the prospective payment system for capital-related costs by comparing its hospital-specific rate to the Federal rate applicable to the hospital's first cost reporting period under the prospective payment system. The applicable Federal rate was determined by making adjustments as follows:

- For outliers by dividing the standard Federal rate by the outlier reduction factor for that fiscal year; and,
- For the payment adjustment factors applicable to the hospital (that is, the hospital's geographic adjustment factor, the disproportionate share adjustment factor, and the indirect medical education adjustment factor, when appropriate).

If the hospital-specific rate is above the applicable Federal rate, the hospital is paid under the hold-harmless methodology. If the hospital-specific rate is below the applicable Federal rate, the hospital is paid under the fully prospective methodology.

For purposes of calculating payments for each discharge under both the hold-harmless payment methodology and the fully prospective payment methodology, the standard Federal rate is adjusted as follows: (Standard Federal Rate)×(DRG weight)×(Geographic Adjustment Factor)×(Large Urban Add-on, if applicable)×(COLA adjustment for hospitals located in Alaska and Hawaii)×(1+Disproportionate Share Adjustment Factor+Indirect Medical Education Adjustment Factor, if applicable). The result is termed the adjusted Federal rate.

Payments under the hold-harmless methodology are determined under one of two formulas. A hold-harmless hospital is paid the higher of:

- 100 percent of the adjusted Federal rate for each discharge; or
- An old capital payment equal to 85 percent (100 percent for sole community hospitals) of the hospital's allowable Medicare inpatient old capital costs per discharge for the cost reporting period plus a new capital payment based on a percentage of the adjusted Federal rate for each discharge. The percentage of the adjusted Federal rate equals the ratio of the hospital's allowable Medicare new capital costs to its total Medicare inpatient capital-related costs in the cost reporting period.

Once a hospital receives payment based on 100 percent of the adjusted Federal rate in a cost reporting period beginning on or after October 1, 1994 (or the first cost reporting period after obligated capital that is recognized as old capital under § 412.302(c) is put in use for patient care, if later), the hospital continues to receive capital prospective payment system payments on that basis for the remainder of the transition period.

Payment for each discharge under the fully prospective methodology is the sum of:

- The hospital-specific rate multiplied by the DRG relative weight for the discharge and by the applicable hospital-specific transition blend percentage for the cost reporting period; and
- The adjusted Federal rate multiplied by the Federal transition blend percentage.

The blend percentages for cost reporting periods beginning in FY 1997 are 60 percent of the adjusted Federal rate and 40 percent of the hospital-specific rate.

Hospitals may also receive outlier payments for those cases that qualify under the thresholds established for each fiscal year. Section 412.312(c) provides for a single set of thresholds to identify outlier cases for both inpatient operating and inpatient capital-related payments. Outlier payments are made only on that portion of the Federal rate that is used to calculate the hospital's inpatient capital-related payments. For fully prospective hospitals, that portion is 60 percent of the Federal rate for discharges occurring in cost reporting periods beginning during FY 1997. Thus, a fully prospective hospital will receive 60 percent of the capital-related outlier payment calculated for the case for discharges occurring in cost reporting periods beginning in FY 1997. For hold-harmless hospitals paid 85 percent of their reasonable costs for old inpatient capital, the portion of the Federal rate that is included in the hospital's outlier payments is based on the hospital's ratio of Medicare inpatient costs for new capital to total Medicare inpatient capital costs. For hold-harmless hospitals that are paid 100 percent of the Federal rate, 100 percent of the Federal rate is included in the hospital's outlier payments.

The proposed outlier thresholds for FY 1997 are published in section II.A.4.c of this Addendum. For FY 1997, a case qualifies as a cost outlier if the cost for the case (after standardization for the indirect teaching adjustment and disproportionate share adjustment) is greater than the prospective payment rate for the DRG plus $11,050. A case qualifies as a day outlier for FY 1997 if the length of stay is greater than the geometric mean length of stay for the DRG plus the lesser of 24 days or three standard deviations of the length of stay.

During the capital prospective payment system transition period, a hospital may also receive an additional payment under an exceptions process if its total inpatient capital-related

payments are less than a minimum percentage of its allowable Medicare inpatient capital-related costs. The minimum payment level is established by class of hospital under § 412.348. The proposed minimum payment levels for portions of cost reporting periods occurring in FY 1997 are:

- Sole community hospitals (located in either an urban or rural area), 90 percent;
- Urban hospitals with at least 100 beds and a disproportionate share patient percentage of at least 20.2 percent and urban hospitals with at least 100 beds that qualify for disproportionate share payments under § 412.106(c)(2), 80 percent; and,
- All other hospitals, 70 percent.

Under § 412.348(d), the amount of the exceptions payment is determined by comparing the cumulative payments made to the hospital under the capital prospective payment system to the cumulative minimum payment levels applicable to the hospital for each cost reporting period subject to that system. Any amount by which the hospital's cumulative payments exceed its cumulative minimum payment is deducted from the additional payment that would otherwise be payable for a cost reporting period.

New hospitals are exempted from the capital prospective payment system for their first 2 years of operation and are paid 85 percent of their reasonable costs during that period. A new hospital's old capital costs are its allowable costs for capital assets that were put in use for patient care on or before the later of December 31, 1990 or the last day of the hospital's base year cost reporting period, and are subject to the rules pertaining to old capital and obligated capital as of the applicable date. Effective with the third year of operation, we will pay the hospital under either the fully prospective methodology, using the appropriate transition blend in that Federal fiscal year, or the hold-harmless methodology. If the hold-harmless methodology is applicable, the hold-harmless payment for assets in use during the base period would extend for 8 years, even if the hold-harmless payments extend beyond the normal transition period.

V. Tables

This section contains the tables referred to throughout the preamble to this proposed rule and in this Addendum. For purposes of this proposed rule, and to avoid confusion, we have retained the designations of Tables 1 through 5 that were first used in the September 1, 1983 initial prospective payment final rule (48 FR 39844). Tables 1a, 1c, 1d, 3C, 4a, 4b, 4c, 4d, 4e, 5, 6A, 6B, 6C, 6D, 6E, 6F, 6G, 6H, 7A, 7B, 8A, and 8B are presented below. The tables presented below are as follows:

Table 1a—National Adjusted Operating Standardized Amounts, Labor/Nonlabor
Table 1c—Adjusted Operating Standardized Amounts for Puerto Rico, Labor/Nonlabor
Table 1d—Capital Standard Federal Payment Rate
Table 3C—Hospital Case Mix Indexes for Discharges Occurring in Federal Fiscal Year 1995 and Hospital Average Hourly Wage for Federal Fiscal Year 1997 Wage Index
Table 4a—Wage Index and Capital Geographic Adjustment Factor (GAF) for Urban Areas
Table 4b—Wage Index and Capital Geographic Adjustment Factor (GAF) for Rural Areas
Table 4c—Wage Index and Capital Geographic Adjustment Factor (GAF) for Hospitals That Are Reclassified
Table 4d—Average Hourly Wage for Urban Areas
Table 4e—Average Hourly Wage for Rural Areas
Table 5—List of Diagnosis Related Groups (DRGs), Relative Weighting Factors, Geometric Mean Length of Stay, and Length of Stay Outlier Cutoff Points Used in the Prospective Payment System
Table 6A—New Diagnosis Codes
Table 6B—New Procedure Codes
Table 6C—Invalid Diagnosis Codes
Table 6D—Invalid Procedure Codes
Table 6E—Revised Diagnosis Code Titles
Table 6F—Revised Procedure Code Titles
Table 6G—Additions to the CC Exclusions List
Table 6H—Deletions to the CC Exclusions List
Table 7A—Medicare Prospective Payment System Selected Percentile Lengths of Stay FY 95 MEDPAR Update 12/95 GROUPER V13.0
Table 7B—Medicare Prospective Payment System Selected Percentile Lengths of Stay FY 95 MEDPAR Update 12/95 GROUPER V14.0
Table 8A—Statewide Average Operating Cost-to-Charge Ratios for Urban and Rural Hospitals (Case Weighted) April 1996
Table 8B—Statewide Average Capital Cost-to-Charge Ratios (Case Weighted) April 1996

TABLE 1A.—NATIONAL ADJUSTED OPERATING STANDARDIZED AMOUNTS, LABOR/NONLABOR

Large urban areas		Other areas	
Labor-related	Non-labor related	Labor-related	Non-labor related
2796.66	1131.23	2752.39	1113.33

TABLE 1C.—ADJUSTED OPERATING STANDARDIZED AMOUNTS FOR PUERTO RICO, LABOR/NONLABOR

	Large urban areas		Other areas	
	Labor-related	Non-labor related	Labor-related	Non-labor related
National	$2772.89	$1121.62	$2772.89	$1121.62
Puerto Rico	2501.07	521.22	2461.47	512.97

TABLE 1D.—CAPITAL STANDARD FEDERAL PAYMENT RATE

	Rate
National	$441.84
Puerto Rico	339.87

TABLE 3C.—HOSPITAL CASE MIX INDEXES FOR DISCHARGES OCCURRING IN FEDERAL FISCAL YEAR 1995

PAGE 1 OF 16

Provider	Case mix index	Avg. hour wage	Provider	Case mix index	Avg. hour wage	Provider	Case mix index	Avg. hour wage	Provider	Case mix index	Avg. hour wage	Provider	Case mix index	Avg. hour wage
010001	01.4400	14.82	010095	00.9230	11.25	030004	00.9824	13.49	040004	01.4485	14.83	040107	01.1923	14.95
010004	00.9600	11.10	010097	00.9405	15.20	030006	01.5576	17.52	040005	01.0380	11.59	040109	01.1692	12.69
010005	01.1609	15.40	010098	01.1941	11.02	030007	01.3158	16.41	040007	01.8761	18.12	040114	01.8513	16.64
010006	01.4752	15.23	010099	01.1210	15.49	030008	02.1095	20.42	040008	01.0325	10.77	040116	01.3895	19.25
010007	01.0986	13.12	010100	01.1688	14.77	030009	01.2993	15.58	040010	01.2298	13.78	040118	01.1313	14.29
010008	01.1366	09.54	010101	01.1127	14.21	030010	01.4160	17.75	040011	00.9298	10.75	040119	01.0914	14.34
010009	01.1377	14.82	010102	00.9529	13.63	030011	01.4747	17.66	040014	01.1929	16.07	040124	01.2238	14.30
010010	01.1330	14.33	010103	01.7534	17.01	030012	01.2246	15.81	040015	01.1944	12.12	040126	00.9617	11.74
010011	01.6185	18.94	010104	01.6892	17.87	030013	01.2459	18.99	040016	01.7330	16.43	050002	01.5554	25.91
010012	01.2666	16.27	010108	01.1189	13.68	030014	01.4394	17.86	040017	01.2569	11.68	050006	01.3983	19.15
010015	01.0512	15.63	010109	01.0527	11.48	030016	01.2462	17.09	040018	01.1686	16.66	050007	01.5848	25.29
010016	01.2643	16.76	010110	01.0168	13.44	030017	01.4929	18.98	040019	01.1618	13.52	050008	01.4998	25.48
010018	00.9017	16.19	010112	01.1253	14.09	030018	01.7989	19.57	040020	01.5987	14.08	050009	01.7211	31.63
010019	01.2868	14.99	010113	01.6374	13.69	030019	01.1962	19.31	040021	01.2277	14.69	050013	01.8099	22.05
010021	01.2388	12.20	010114	01.3174	15.37	030022	01.5055	17.41	040022	01.6951	14.73	050014	01.1741	22.55
010022	01.0109	16.89	010115	00.8385	11.98	030023	01.2640	17.64	040024	01.1709	12.16	050015	01.3882	22.18
010023	01.4760	14.71	010117	00.7880	13.54	030024	01.7809	21.04	040025	00.9214	11.81	050016	01.1598	18.51
010024	01.4014	15.62	010118	01.2475	15.07	030025	01.1633	12.76	040026	01.5547	16.35	050017	02.0618	24.39
010025	01.4390	13.16	010119	01.5429	16.36	030027	01.0875	14.69	040027	01.2889	12.56	050018	01.3434	18.49
010027	00.8352	13.55	010120	00.9668	14.32	030030	01.6651	18.19	040028	01.0903	11.40	050021	01.4146	23.75
010029	01.4957	14.84	010121	01.2269	12.92	030033	01.2475	16.40	040029	01.2557	14.12	050022	01.4601	22.63
010031	01.1808	14.58	010123	01.2421	17.47	030034	01.0430	15.89	040030	00.8925	11.09	050024	01.3952	21.31
010032	00.9478	12.45	010124	01.2927	16.15	030035	01.3403	20.77	040032	01.0056	11.18	050025	01.8000	22.00
010033	01.9143	17.61	010125	01.0247	12.86	030036	01.1393	18.23	040035	01.0240	10.24	050026	01.4525	21.79
010034	01.0751	13.48	010126	01.1770	13.13	030037	02.0161	19.60	040036	01.4976	16.45	050028	01.4395	15.33
010035	01.2397	15.13	010127	01.2999	16.29	030038	01.6125	18.82	040037	01.1101	11.55	050029	01.3830	25.55
010036	01.1252	15.34	010128	00.9565	12.34	030040	01.1885	15.88	040039	01.2411	12.23	050030	01.3324	19.24
010038	01.3397	16.48	010129	01.0795	13.29	030041	00.9963	13.68	040040	00.9953	15.73	050032	01.2735	22.76
010039	01.7029	16.14	010130	01.0352	15.28	030043	01.1937	18.25	040041	01.3946	13.95	050033	01.4136	25.47
010040	01.5335	18.21	010131	01.3636	17.75	030044	01.0291	13.19	040042	01.2978	12.03	050036	01.6162	18.61
010043	01.1036	10.35	010134	00.9206	13.36	030046	00.9134	16.38	040044	00.9622	10.04	050038	01.4553	29.05
010044	01.0919	11.01	010137	01.2516	16.36	030047	00.9471	19.91	040045	01.0301	14.28	050039	01.6127	21.04
010045	01.2121	10.79	010138	00.9485	09.85	030049	00.9741	17.30	040047	01.0939	14.78	050040	01.0842	22.92
010046	01.5291	15.51	010139	01.6592	19.67	030054	00.8723	12.63	040048	01.2149	13.48	050041	02.8656	22.21
010047	01.0243	10.05	010143	01.1921	15.83	030055	01.2014	16.85	040050	01.1013	11.66	050042	01.3081	20.20
010049	01.1121	15.66	010144	01.3104	18.42	030059	01.2776	19.95	040051	01.0923	12.64	050043	01.5723	30.15
010050	01.0635	13.48	010145	01.3376	14.59	030060	01.2095	13.90	040053	01.1093	11.67	050045	01.2649	17.11
010051	00.8549	10.24	010146	01.1772	15.59	030061	01.6462	16.75	040054	01.0301	12.44	050046	01.1888	23.81
010052	00.9858	12.78	010148	00.9969	12.83	030062	01.2267	15.56	040055	01.4506	14.51	050047	01.6388	29.15
010053	01.0653	12.67	010149	01.3527	17.75	030064	01.6191	16.92	040058	01.0617	13.61	050051	01.1104	16.63
010054	01.1726	16.17	010150	01.0473	16.29	030065	01.6407	18.87	040060	00.9896	09.85	050054	01.1961	20.55
010055	01.4846	16.35	010152	01.4762	16.29	030067	01.0515	15.92	040062	01.6181	16.66	050055	01.3742	27.54
010056	01.3970	17.99	010155	00.9996	09.42	030068	00.9514	14.04	040063	01.4673	15.67	050056	01.3374	25.23
010058	01.0881	12.96	020001	01.4712	25.53	030069	01.3354	19.11	040064	01.0523	10.49	050057	01.4835	20.22
010059	01.0165	14.17	020002	01.0281	24.16	030071	00.9488	.....	040066	01.1537	14.63	050058	01.4664	22.78
010061	01.0127	14.70	020004	01.1028	25.46	030072	00.9090	.....	040067	01.0801	11.34	050060	01.5897	24.25
010062	01.0042	13.45	020005	00.9029	28.36	030073	00.9752	.....	040069	01.1090	14.90	050061	01.4258	22.12
010064	01.7890	17.85	020006	01.1418	23.19	030074	00.8587	.....	040070	00.9433	14.98	050063	01.4029	21.44
010065	01.3668	14.30	020007	00.8909	21.82	030075	00.8660	.....	040071	01.5932	15.42	050065	01.6064	22.37
010066	00.9789	10.87	020008	01.1006	26.45	030076	00.9802	.....	040072	01.0871	13.40	050066	01.2689	24.33
010068	01.2370	18.82	020009	00.9255	21.29	030077	00.8761	.....	040074	01.2566	14.51	050067	01.3777	21.09
010069	01.1589	13.06	020010	00.9141	22.13	030078	01.1027	.....	040075	01.0668	11.57	050068	01.0839	19.05
010072	01.2161	12.72	020011	01.0488	22.27	030079	00.7787	.....	040076	01.0273	14.71	050069	01.6183	23.15
010073	00.9701	09.66	020012	01.3062	23.99	030080	01.6564	20.82	040077	00.9196	10.72	050070	01.2901	30.80
010078	01.1795	15.04	020013	01.0055	24.03	030083	01.3106	21.70	040078	01.4945	17.29	050071	01.3159	30.70
010079	01.2807	12.53	020014	01.0769	24.52	030084	00.9358	.....	040080	01.0752	15.45	050072	01.3053	31.00
010080	01.0389	12.99	020017	01.5181	26.83	030085	01.5045	20.21	040081	00.9285	09.91	050073	01.3239	31.41
010081	01.9832	16.16	020018	00.8963	.....	030086	01.3209	18.76	040082	01.2156	13.69	050074	01.2314	32.96
010083	01.0377	13.25	020019	00.8718	.....	030087	01.6153	18.77	040084	01.0963	14.83	050075	01.4037	30.72
010084	01.4816	16.61	020020	00.8398	.....	030088	01.3513	19.90	040085	01.2493	15.18	050076	01.7756	29.65
010085	01.3233	17.11	020021	00.8478	.....	030089	01.5736	18.66	040088	01.3091	13.73	050077	01.6152	22.83
010086	01.0507	13.54	020024	01.0693	22.64	030092	01.5590	20.62	040090	00.8983	13.78	050078	01.3591	24.44
010087	01.6243	16.88	020025	01.0046	24.44	030093	01.3791	18.08	040091	01.2930	18.25	050079	01.5938	28.30
010089	01.1934	14.91	020026	01.3340	.....	030094	01.2494	18.57	040093	00.9598	10.98	050080	01.2183	22.05
010090	01.5725	16.40	020027	00.9975	.....	030095	01.2183	13.09	040095	00.9069	10.56	050081	01.6564	24.01
010091	00.9195	13.43	030001	01.3076	19.28	040001	01.1308	12.37	040100	01.2465	12.81	050082	01.4989	21.34
010092	01.4209	15.17	030002	01.7918	20.25	040002	01.1644	13.07	040105	01.0068	11.90	050084	01.5611	22.33
010094	01.1410	16.76	030003	01.8923	21.05	040003	01.0704	13.19	040106	01.2448	12.84	050088	01.1538	21.94

PAGE 2 OF 16

Provider	Case mix index	Avg. hour wage	Provider	Case mix index	Avg. hour wage	Provider	Case mix index	Avg. hour wage	Provider	Case mix index	Avg. hour wage	Provider	Case mix index	Avg. hour wage
050089	01.3485	19.92	050189	00.9777	21.50	050296	01.2071	22.69	050420	01.4424	25.15	050545	00.8420	20.39
050090	01.2755	21.75	050191	01.5032	20.64	050298	01.3081	20.18	050421	01.4112	24.62	050546	00.7212	21.10
050091	01.1984	24.42	050192	01.1071	18.74	050299	01.3607	22.49	050423	00.9821	19.25	050547	00.9602	20.65
050092	00.8504	16.19	050193	01.3631	22.56	050300	01.3100	18.87	050424	01.8316	22.16	050549	01.7182	25.86
050093	01.5917	22.35	050194	01.2409	25.03	050301	01.3825	21.54	050425	01.2719	30.41	050550	02.3168	23.34
050096	01.1244	12.95	050195	01.5876	31.29	050302	01.4049	24.31	050426	01.3055	23.89	050551	01.3473	24.20
050097	01.5025	18.40	050196	01.4205	16.40	050305	01.5824	29.82	050430	00.9919	15.94	050552	01.1633	22.44
050099	01.4660	22.91	050197	01.8278	29.07	050307	01.4439	20.51	050431	01.0836	22.58	050557	01.4928	21.08
050100	01.6910	29.38	050199	00.8980	19.48	050308	01.5797	29.77	050432	01.5774	23.69	050559	01.3672	24.18
050101	01.3999	25.12	050204	01.4910	23.12	050309	01.3306	23.63	050433	01.0327	17.37	050560	01.1894	.....
050102	01.4714	22.34	050205	01.3876	19.99	050310	01.2239	22.24	050434	01.1491	18.08	050561	01.2110	30.34
050103	01.6097	26.74	050207	01.2860	20.58	050312	01.9820	23.66	050435	01.2411	18.98	050564	01.2109	24.02
050104	01.3906	21.73	050208	00.9572	27.63	050313	01.1891	20.90	050436	01.0099	15.77	050565	01.1456	21.26
050107	01.4355	22.92	050211	01.3142	29.60	050315	01.1826	20.75	050438	01.6261	23.33	050566	00.8791	19.75
050108	01.5819	22.78	050213	01.3924	21.12	050317	01.3583	20.90	050440	01.4107	19.93	050567	01.6543	23.01
050109	02.3436	24.68	050214	01.4409	21.76	050320	01.3185	27.27	050441	01.9214	28.10	050568	01.4314	18.28
050110	01.2436	18.72	050215	01.5216	27.75	050324	01.8339	25.93	050443	00.9533	15.95	050569	01.3545	22.93
050111	01.3786	18.81	050217	01.3730	18.44	050325	01.2554	20.87	050444	01.3479	22.19	050570	01.7026	24.91
050112	01.5234	22.15	050219	01.3115	20.37	050327	01.5839	21.00	050446	00.8936	17.25	050571	01.4016	22.37
050113	01.2749	28.23	050222	01.5916	24.56	050328	01.4584	32.92	050447	01.0883	18.59	050573	01.6412	23.66
050114	01.3978	21.65	050224	01.5471	22.17	050329	01.3142	20.34	050448	01.1113	19.82	050575	01.2303	.....
050115	01.6146	21.11	050225	01.3284	20.67	050331	01.4090	27.22	050449	01.3527	21.99	050577	01.3652	20.32
050116	01.4542	22.73	050226	01.3349	22.58	050333	00.9767	18.66	050454	01.8309	26.10	050578	01.1731	23.70
050117	01.2871	20.93	050228	01.3665	29.90	050334	01.7683	28.22	050455	01.9292	22.89	050579	01.5656	26.94
050118	01.2840	23.24	050230	01.2972	26.22	050335	01.2505	19.62	050456	01.1314	20.24	050580	01.3595	23.47
050121	01.4060	19.96	050231	01.6364	24.14	050336	01.3398	21.04	050457	01.9435	28.66	050581	01.4162	24.63
050122	01.7066	22.90	050232	01.7628	24.17	050337	01.1726	23.87	050459	01.1929	28.20	050583	01.5880	23.08
050124	01.2730	19.72	050233	01.2974	30.88	050342	01.3686	17.55	050464	01.8776	22.62	050584	01.2006	22.39
050125	01.3140	25.98	050234	01.3251	22.00	050343	01.0325	18.56	050468	01.4046	16.26	050585	01.2357	23.70
050126	01.4704	23.23	050235	01.5105	25.00	050348	01.6030	22.83	050469	01.0879	17.33	050586	01.3647	21.76
050127	01.2952	22.89	050236	01.6626	24.28	050349	00.8988	14.28	050470	01.1148	21.29	050588	01.3703	26.55
050128	01.5405	20.97	050238	01.4959	22.95	050350	01.3856	22.68	050471	01.7202	24.07	050589	01.3124	25.37
050129	01.5583	22.11	050239	01.5085	21.24	050351	01.4774	24.81	050476	01.3437	19.12	050590	01.4086	23.00
050131	01.2652	27.83	050240	01.3951	22.82	050352	01.2941	23.35	050477	01.5136	24.50	050591	01.2861	27.01
050132	01.4397	24.55	050241	01.2374	25.78	050353	01.5622	21.45	050478	00.9225	21.73	050592	01.3408	20.34
050133	01.3513	20.16	050242	01.4698	27.10	050355	00.9696	15.53	050481	01.4166	24.85	050593	01.5583	24.40
050135	01.3794	26.86	050243	01.5323	21.58	050357	01.7247	23.17	050482	00.9451	14.55	050594	02.0151	23.81
050136	01.3772	22.75	050245	01.3837	21.74	050359	01.2172	18.78	050483	01.1666	23.89	050597	01.2786	21.91
050137	01.3802	31.46	050248	01.2124	24.50	050360	01.4656	30.15	050485	01.6275	22.34	050598	01.3940	26.87
050138	01.8728	32.07	050251	01.0753	17.68	050366	01.3174	20.47	050486	01.4180	24.94	050599	01.6829	22.70
050139	01.3396	31.14	050253	00.7232	18.87	050367	01.2881	27.02	050488	01.3879	30.41	050601	01.3075	29.03
050140	01.4139	30.76	050254	01.1940	22.13	050369	01.3323	23.30	050489	00.9718	27.10	050603	01.4252	23.50
050144	01.5835	26.03	050256	01.7700	19.70	050373	01.3964	23.83	050491	01.2797	23.76	050604	01.5933	29.56
050145	01.3571	27.67	050257	01.0715	20.65	050376	01.3932	25.86	050492	01.2458	23.05	050607	01.3006	21.79
050146	01.3245	.....	050260	01.0965	21.96	050377	00.9012	15.01	050494	01.1674	24.95	050608	01.3067	15.23
050147	00.6896	20.55	050261	01.1927	17.91	050378	01.0814	22.45	050496	01.7959	31.60	050609	01.4365	31.39
050148	01.1273	19.62	050262	01.9179	26.89	050379	01.0921	19.04	050497	00.7948	.....	050613	01.1496	22.70
050149	01.4339	19.87	050263	01.2879	24.24	050380	01.6703	28.31	050498	01.2636	22.42	050615	01.6939	23.31
050150	01.2565	23.23	050264	01.3732	26.01	050382	01.4511	20.97	050502	01.6551	23.61	050616	01.2953	20.68
050152	01.4301	24.60	050267	01.5239	24.88	050385	01.3960	24.83	050503	01.2916	23.01	050618	01.0619	19.36
050153	01.6384	30.53	050270	01.2432	23.60	050388	00.9028	14.19	050506	01.4122	25.57	050623	01.1349	24.40
050155	01.1043	23.60	050272	01.3296	19.69	050390	01.2211	20.80	050510	01.3632	30.59	050624	01.3670	25.95
050158	01.6805	27.88	050274	00.9624	18.36	050391	01.2785	21.61	050512	01.4686	31.38	050625	01.6096	24.00
050159	01.2651	22.01	050276	01.2223	26.99	050392	00.9426	17.56	050515	01.3589	30.78	050630	01.3621	21.26
050167	01.4551	21.67	050277	01.3817	21.30	050393	01.4157	21.56	050516	01.6670	24.33	050633	01.2959	21.76
050168	01.6003	24.83	050278	01.5174	23.01	050394	01.5428	20.71	050517	01.2879	19.15	050635	01.4145	31.17
050169	01.5891	24.53	050279	01.2461	20.58	050396	01.6157	21.89	050522	01.3128	30.40	050636	01.4311	20.28
050170	01.5175	21.58	050280	01.6551	22.80	050397	01.0118	19.97	050523	01.2703	27.65	050638	01.1002	24.28
050172	01.2609	19.96	050281	01.4519	22.74	050401	01.1174	19.09	050526	01.3687	24.28	050641	01.2473	12.26
050173	01.2203	23.70	050282	01.3433	21.42	050404	01.1443	16.51	050528	01.3542	16.46	050643	00.7832	.....
050174	01.6873	27.89	050283	01.1267	27.59	050406	01.1263	15.29	050531	01.3012	23.60	050644	00.9053	26.86
050175	01.3926	21.97	050286	01.0350	17.99	050407	01.3254	27.06	050534	01.3853	23.83	050660	01.3428	.....
050177	01.2994	18.76	050289	01.7845	27.38	050410	01.0706	17.45	050535	01.3827	22.46	050661	00.8831	20.21
050179	01.2600	17.29	050290	01.6330	32.31	050411	01.4042	29.35	050537	01.2622	21.30	050662	00.8549	21.17
050180	01.5539	30.12	050291	01.2553	24.46	050414	01.2846	24.32	050539	01.2184	21.90	050663	01.0604	23.51
050183	01.1940	19.09	050292	01.0963	21.20	050417	01.3037	19.65	050541	01.5870	31.06	050666	00.7423	23.76
050186	01.2694	24.12	050293	01.1312	19.93	050418	01.4191	24.24	050542	01.2270	13.79	050667	01.0672	24.88
050188	01.3467	25.25	050295	01.4144	20.86	050419	01.3136	18.88	050543	00.9214	21.68	050668	01.1532	28.20

PAGE 3 OF 16

Provider	Case mix index	Avg. hour wage	Provider	Case mix index	Avg. hour wage	Provider	Case mix index	Avg. hour wage	Provider	Case mix index	Avg. hour wage	Provider	Case mix index	Avg. hour wage
050670	00.7582	20.12	060046	01.1205	16.56	080005	01.3363	16.82	100071	01.3024	16.98	100167	01.3944	20.55
050672	00.6267	23.77	060047	00.9606	11.40	080006	01.3822	20.49	100072	01.2515	17.24	100168	01.3799	19.35
050674	01.2111	29.18	060049	01.3511	17.47	080007	01.3620	17.99	100073	01.7938	20.61	100169	01.8590	18.29
050675	01.7056	16.32	060050	01.1719	14.62	090001	01.4216	19.65	100075	01.6403	17.85	100170	01.4917	16.50
050676	00.9864	13.83	060052	01.0999	18.38	090002	01.3022	20.51	100076	01.3869	17.15	100172	01.3694	13.38
050677	01.4253	32.99	060053	00.9988	13.73	090003	01.3041	24.74	100077	01.3153	16.78	100173	01.6691	16.33
050678	01.0713	24.07	060054	01.3361	16.74	090004	01.7168	23.49	100078	01.1683	15.14	100174	01.5295	18.20
050680	01.2114	26.13	060056	00.9577	13.37	090005	01.3431	27.07	100079	01.7501	16.01	100175	01.2130	16.18
050682	00.8558	14.98	060057	01.0356	21.11	090006	01.3749	19.52	100080	01.6306	19.40	100176	02.0431	21.95
050684	01.2074	21.30	060058	00.9237	12.54	090007	01.3832	19.58	100081	01.1202	13.33	100177	01.3403	18.55
050685	01.2219	26.94	060060	00.9651	12.21	090008	01.5276	24.06	100082	01.5459	17.93	100179	01.6520	19.03
050686	01.3503	30.96	060062	00.9518	15.85	090010	01.0013	21.70	100083	01.3240	17.30	100180	01.4188	17.49
050688	01.2730	27.89	060063	01.0264	11.12	090011	01.9804	24.77	100084	01.5314	16.53	100181	01.2846	17.59
050689	01.3988	29.12	060064	01.4325	20.21	090015	01.3306	.....	100085	01.4349	19.50	100183	01.3710	19.18
050690	01.4363	30.39	060065	01.3463	19.98	100001	01.5247	18.83	100086	01.3328	21.32	100186	01.4758	16.70
050693	01.9152	28.80	060066	00.9950	13.10	100002	01.4789	19.71	100087	01.8071	20.71	100187	01.4501	18.35
050694	01.3678	21.20	060068	01.2760	14.00	100004	01.0274	11.81	100088	01.6730	17.32	100189	01.3707	23.13
050695	01.1808	24.30	060070	01.0357	14.99	100005	01.0178	16.26	100090	01.4256	16.07	100191	01.3315	19.19
050696	02.0076	27.85	060071	01.2259	14.69	100006	01.5531	18.99	100092	01.4411	16.20	100199	01.4473	21.29
050697	01.1093	17.93	060073	01.0017	14.32	100007	01.8477	19.61	100093	01.5156	14.28	100200	01.3972	21.35
050698	01.1189	22.83	060075	01.3472	20.27	100008	01.7361	19.80	100098	01.1482	17.43	100203	01.2603	19.34
050699	00.5855	23.13	060076	01.3675	15.97	100009	01.5641	17.89	100099	01.2518	13.09	100204	01.6232	19.95
050700	01.4412	32.46	060085	00.9819	10.94	100010	01.5475	20.58	100102	01.1033	16.44	100206	01.3458	19.47
050701	01.3170	27.13	060087	01.6558	18.67	100012	01.6776	16.91	100103	01.1730	14.46	100207	01.4710	19.86
050702	00.8637	16.98	060088	01.0388	15.38	100014	01.4272	18.57	100105	01.4697	18.08	100208	01.6409	21.14
050704	01.2140	20.48	060090	00.9518	14.23	100015	01.2444	17.60	100106	01.0395	15.46	100209	01.6671	.....
050706	00.9234	16.16	060096	00.9724	21.69	100017	01.6489	17.18	100107	01.4676	18.26	100210	01.6647	16.51
050707	01.2237	25.62	060100	01.4045	20.95	100018	01.2869	19.94	100108	01.1017	15.45	100211	01.3441	19.17
050708	00.9493	15.13	060103	01.2269	21.10	100019	01.4930	18.81	100109	01.3522	16.81	100212	01.6646	18.54
050709	01.3030	.....	060104	01.3213	20.32	100020	01.3365	18.31	100110	01.4128	18.91	100213	01.5438	20.00
050710	01.4014	.....	070001	01.7582	24.78	100022	01.8009	23.05	100112	00.9738	10.84	100217	01.3055	17.06
050711	02.3868	.....	070002	01.8728	24.78	100023	01.3489	15.88	100113	02.0848	18.19	100220	01.9563	19.66
050712	02.1147	.....	070003	01.1239	24.50	100024	01.3583	19.54	100114	01.4930	17.73	100221	01.5644	20.68
060001	01.5550	18.95	070004	01.1696	23.70	100025	01.8825	16.22	100117	01.3334	18.18	100222	01.3723	18.80
060003	01.2961	15.85	070005	01.3792	25.45	100026	01.6477	15.52	100118	01.2737	16.03	100223	01.4892	18.53
060004	01.2624	19.46	070006	01.3529	26.73	100027	00.9736	11.53	100121	01.3068	15.44	100224	01.4648	19.77
060006	01.1955	16.19	070007	01.3475	24.08	100028	01.2678	16.38	100122	01.4565	16.39	100225	01.3368	19.52
060007	01.1900	13.06	070008	01.3124	23.47	100029	01.4029	18.94	100124	01.3643	19.41	100226	01.3383	16.58
060008	01.0198	14.31	070009	01.2830	25.01	100030	01.2690	18.25	100125	01.1630	17.77	100228	01.2947	21.09
060009	01.4621	19.88	070010	01.5535	22.46	100032	01.9188	17.39	100126	01.4954	18.74	100229	01.3211	16.27
060010	01.5276	21.10	070011	01.3259	22.80	100034	01.7338	18.34	100127	01.6870	17.42	100230	01.5471	18.97
060011	01.3023	20.75	070012	01.2576	23.38	100035	01.6138	16.46	100128	02.2417	20.13	100231	01.6613	17.46
060012	01.3852	15.79	070013	01.2822	24.01	100038	01.5951	21.18	100129	01.2509	17.45	100232	01.2675	17.64
060013	01.2654	18.83	070015	01.3569	23.82	100039	01.7158	21.15	100130	01.2008	17.45	100234	01.5324	19.03
060014	01.6915	20.52	070016	01.3194	25.46	100040	01.6731	16.31	100131	01.3922	18.44	100235	01.4827	17.51
060015	01.5657	19.33	070017	01.3781	23.54	100043	01.4570	17.78	100132	01.4189	15.67	100236	01.4442	13.79
060016	01.0954	11.42	070018	01.3719	27.83	100044	01.5045	19.01	100134	01.0741	14.50	100237	02.1446	22.65
060018	01.2199	16.36	070019	01.2169	24.04	100045	01.4032	17.12	100135	01.5224	16.11	100238	01.4858	18.68
060020	01.5176	16.73	070020	01.3709	24.32	100046	01.5110	18.53	100137	01.3279	18.42	100239	01.4622	19.34
060022	01.6695	17.89	070021	01.2987	25.47	100047	01.9163	18.62	100138	00.9478	13.00	100240	00.8437	15.06
060023	01.6463	16.65	070022	01.7641	24.30	100048	01.0025	11.69	100139	01.0496	14.54	100241	00.9433	12.47
060024	01.8181	22.01	070024	01.3541	23.81	100049	01.3263	18.03	100140	01.2518	16.87	100242	01.4135	16.29
060026	01.4223	19.44	070025	01.7842	24.06	100050	01.2227	15.06	100142	01.2004	16.68	100243	01.4119	18.82
060027	01.6577	19.01	070026	01.2223	23.07	100051	01.1532	16.60	100144	01.1466	13.65	100244	01.4339	17.32
060028	01.4947	21.29	070027	01.2599	24.31	100052	01.3772	15.60	100145	01.3481	14.87	100246	01.3465	20.92
060029	00.9485	13.93	070028	01.4783	24.67	100053	01.2886	17.36	100146	01.2770	14.27	100248	01.6989	17.88
060030	01.3165	20.36	070029	01.3524	21.65	100054	01.2923	17.44	100147	01.0996	13.43	100249	01.3543	18.87
060031	01.6115	18.95	070030	01.2990	24.71	100055	01.3679	17.47	100150	01.3759	18.64	100252	01.2419	19.21
060032	01.5777	19.35	070031	01.2706	22.24	100056	01.4655	19.83	100151	01.8572	18.63	100253	01.4755	20.60
060033	01.1561	11.96	070033	01.2881	28.25	100057	01.3455	16.78	100154	01.5689	17.95	100254	01.5854	17.50
060034	01.4958	16.90	070034	01.3752	24.74	100060	01.8491	17.71	100156	01.2204	18.65	100255	01.3322	19.00
060036	01.1712	14.37	070035	01.3469	24.31	100061	01.5100	20.88	100157	01.6134	19.31	100256	01.8955	19.32
060037	01.0382	13.22	070036	01.4320	26.98	100062	01.7185	16.94	100159	00.9856	12.76	100258	01.6509	21.12
060038	01.0192	12.25	070039	00.9213	.....	100063	01.3423	16.12	100160	01.1059	18.07	100259	01.4493	16.36
060041	00.9203	16.53	080001	01.6101	23.66	100067	01.4267	16.38	100161	01.5194	19.76	100260	01.4016	20.44
060042	01.0532	18.49	080002	01.1904	17.32	100068	01.3880	17.42	100162	01.3924	14.53	100262	01.4109	19.32
060043	00.9506	11.78	080003	01.3137	19.32	100069	01.3653	17.29	100165	01.2958	13.45	100263	01.3896	15.44
060044	01.2631	17.32	080004	01.2871	17.59	100070	01.4420	17.56	100166	01.4618	20.31	100264	01.3958	18.24

PAGE 4 OF 16

Provider	Case mix index	Avg. hour wage	Provider	Case mix index	Avg. hour wage	Provider	Case mix index	Avg. hour wage	Provider	Case mix index	Avg. hour wage	Provider	Case mix index	Avg. hour wage
100265	01.3686	17.47	110063	01.0768	11.44	110156	01.0003	12.68	130011	01.2386	16.74	140045	01.0555	14.21
100266	01.2337	15.64	110064	01.2883	15.87	110161	01.3328	20.79	130012	01.0233	18.53	140046	01.3023	14.83
100267	01.3092	16.39	110065	01.0143	12.00	110162	00.8588	.....	130013	01.2416	17.21	140047	01.1406	13.20
100268	01.1990	22.00	110066	01.4374	16.30	110163	01.4549	18.52	130014	01.3094	16.43	140048	01.2744	21.50
100269	01.3605	19.07	110069	01.1706	15.22	110164	01.4190	19.63	130015	00.8608	12.43	140049	01.5796	19.35
100270	00.8185	12.95	110070	01.1733	11.37	110165	01.3107	17.47	130016	00.9300	16.18	140051	01.4912	19.14
100271	01.6614	19.27	110071	01.0308	10.29	110166	01.4995	16.67	130017	01.3710	13.03	140052	01.3150	16.77
100273	00.5356	19.72	110072	01.0243	11.53	110168	01.6538	19.22	130018	01.7015	17.60	140053	01.8914	17.88
100275	01.4206	21.96	110073	01.2050	12.67	110169	00.7308	19.70	130019	01.1172	13.74	140054	01.3616	26.25
100276	01.3027	21.94	110074	01.4803	18.11	110171	01.4451	21.21	130021	01.0324	11.96	140055	00.9382	13.00
100277	01.0093	12.71	110075	01.2149	15.29	110172	01.3290	22.83	130022	01.1917	15.44	140058	01.2318	15.26
100279	01.3786	18.35	110076	01.3902	18.01	110174	01.0473	17.57	130024	01.0580	15.25	140059	01.1334	13.52
100280	01.3831	16.93	110078	01.6637	20.46	110176	01.1251	19.42	130025	01.1537	15.21	140061	01.0878	13.80
100281	01.2517	20.85	110079	01.3869	21.08	110177	01.4857	19.21	130026	01.1747	17.89	140062	01.2451	23.10
100282	01.0482	16.99	110080	01.1544	16.86	110178	01.3702	16.78	130027	00.9528	17.18	140063	01.3960	22.48
100283	01.5478	.....	110082	02.0163	20.36	110179	01.2381	21.56	130028	01.2515	16.08	140064	01.2951	16.15
110001	01.2914	17.40	110083	01.7255	20.66	110181	00.9860	12.59	130029	01.0268	17.07	140065	01.4926	23.68
110002	01.2397	14.83	110086	01.2253	13.74	110183	01.3704	19.70	130030	01.0243	16.20	140066	01.3711	13.39
110003	01.3129	15.41	110087	01.3386	19.17	110184	01.1715	17.58	130031	01.0201	13.26	140067	01.8194	18.24
110004	01.3118	16.17	110088	00.9740	11.17	110185	01.0833	12.23	130034	01.0393	16.38	140068	01.3583	19.00
110005	01.1872	21.40	110089	01.2146	15.37	110186	01.3060	15.97	130035	01.0736	15.37	140069	01.0029	14.23
110006	01.3597	18.00	110091	01.3449	19.15	110187	01.2469	17.19	130036	01.2609	12.50	140070	01.2830	16.18
110007	01.4425	15.69	110092	01.1821	12.55	110188	01.4186	18.00	130037	01.2616	14.58	140074	00.9704	14.60
110008	01.2405	15.47	110093	01.0096	09.81	110189	01.1327	19.78	130043	00.9469	14.61	140075	01.4685	21.53
110009	01.0377	15.71	110094	00.9542	12.06	110190	01.0859	14.41	130044	01.1660	12.37	140077	01.1503	17.05
110010	02.1503	21.39	110095	01.2750	13.86	110191	01.3482	18.06	130045	01.0284	12.15	140079	01.2410	20.90
110011	01.2868	16.01	110096	01.1414	14.30	110192	01.3977	22.17	130048	01.0663	11.90	140080	01.5779	19.60
110013	01.1312	14.36	110097	01.0166	15.58	110193	01.2300	16.16	130049	01.2960	17.55	140081	01.0821	13.92
110014	01.0340	14.48	110098	01.0881	11.76	110194	00.9644	11.77	130054	00.9683	17.12	140082	01.5059	22.10
110015	01.3622	16.52	110100	01.0968	12.27	110195	01.0844	10.50	130056	00.8652	09.45	140083	01.2600	16.51
110016	01.2991	14.21	110101	01.1035	09.24	110198	01.3316	22.58	130058	01.0150	12.87	140084	01.2248	17.94
110017	00.8897	11.01	110103	00.9630	10.35	110200	01.9437	15.79	130060	01.1458	18.38	140086	01.1464	13.93
110018	01.1357	17.20	110104	01.1073	13.28	110201	01.4531	16.13	130061	00.9513	.....	140087	01.3852	17.10
110020	01.2352	17.30	110105	01.1304	15.17	110203	00.9692	14.94	140001	01.2958	14.63	140088	01.6480	23.33
110023	01.2361	17.53	110107	01.8146	17.59	110204	00.7960	13.48	140002	01.2776	17.04	140089	01.2253	15.85
110024	01.4802	18.74	110108	00.9720	11.27	110205	01.1080	11.84	140003	01.0184	13.14	140090	01.5101	23.62
110025	01.4157	16.85	110109	01.1115	12.14	110207	01.1008	15.59	140004	01.0799	13.75	140091	01.8655	17.70
110026	01.1891	13.87	110111	01.1934	14.70	110208	00.9734	14.94	140005	00.9511	09.98	140093	01.1961	17.17
110027	01.1013	14.56	110112	01.1522	15.06	110209	00.8222	.....	140007	01.4675	20.56	140094	01.2905	18.81
110028	01.5984	17.75	110113	01.1384	12.86	120001	01.7331	24.22	140008	01.4859	20.57	140095	01.3991	.....
110029	01.3374	17.71	110114	01.0749	13.75	120002	01.1971	21.46	140010	01.3888	22.14	140097	00.9102	14.15
110030	01.2807	16.60	110115	01.6188	21.82	120003	01.1450	21.82	140011	01.1465	15.31	140100	01.2229	17.62
110031	01.3367	19.58	110118	01.0422	13.18	120004	01.2653	20.56	140012	01.2840	17.59	140101	01.2108	18.04
110032	01.2298	15.31	110120	01.0800	13.35	120005	01.2656	18.34	140013	01.6579	16.49	140102	01.0422	14.09
110033	01.5204	20.32	110121	01.1802	11.84	120006	01.2116	22.75	140014	01.0745	16.31	140103	01.3357	16.66
110034	01.5019	16.64	110122	01.3550	16.03	120007	01.6278	20.27	140015	01.2937	13.45	140105	01.3085	18.25
110035	01.3991	18.53	110124	01.0703	15.32	120009	01.0061	18.05	140016	00.9317	11.59	140107	01.0869	11.63
110036	01.6840	22.81	110125	01.2217	15.97	120010	01.8369	22.11	140018	01.4564	18.85	140108	01.3663	20.00
110037	01.0904	10.18	110127	00.9066	14.43	120011	01.2382	30.31	140019	00.9926	11.80	140109	01.1410	12.95
110038	01.4674	15.04	110128	01.1920	17.54	120012	01.0209	20.30	140024	01.0178	13.59	140110	01.2359	14.51
110039	01.3709	17.93	110129	01.6749	13.01	120014	01.3556	21.25	140025	01.0795	15.88	140112	01.0953	13.55
110040	01.0270	16.26	110130	01.0721	10.57	120015	00.8375	21.01	140026	01.1409	15.58	140113	01.4647	19.21
110041	01.2250	16.43	110132	01.1433	12.87	120016	00.8558	21.94	140027	01.3182	15.96	140114	01.3202	18.95
110042	01.2103	14.63	110134	00.8944	11.65	120018	01.0071	21.16	140029	01.3782	19.62	140115	01.2339	19.32
110043	01.7167	15.17	110135	01.1981	13.83	120019	01.1834	19.48	140030	01.6711	21.46	140116	01.2862	19.68
110044	01.0960	14.31	110136	01.1213	13.57	120021	00.9888	19.68	140031	01.1749	13.02	140117	01.4895	17.63
110045	01.2388	22.04	110140	00.8182	15.03	120022	01.7240	17.83	140032	01.2531	16.44	140118	01.6767	22.66
110046	01.1993	15.07	110141	00.9067	11.65	120026	01.2802	22.30	140033	01.2640	19.10	140119	01.6872	19.58
110048	01.3128	12.97	110142	00.9806	11.15	120027	01.5395	21.16	140034	01.1800	16.74	140120	01.5073	14.72
110049	01.0704	13.71	110143	01.3994	20.07	130001	01.0424	17.21	140035	01.0305	10.70	140121	01.5215	10.91
110050	01.0669	14.00	110144	01.1678	16.44	130002	01.3774	14.66	140036	01.2388	15.03	140122	01.5566	21.02
110051	00.9865	16.35	110146	01.0299	09.43	130003	01.3112	18.11	140037	00.9794	12.24	140124	01.1139	23.06
110052	00.9774	09.11	110149	01.1319	12.17	130005	01.4396	18.19	140038	01.1510	15.00	140125	01.3450	15.60
110054	01.2816	16.57	110150	01.3658	16.56	130006	01.8983	18.19	140039	00.9224	11.51	140127	01.3522	16.83
110056	00.9765	12.61	110152	01.1295	13.06	130007	01.6434	18.60	140040	01.3093	14.34	140128	01.0595	16.10
110059	01.2900	14.39	110153	01.0212	15.33	130008	00.9857	10.28	140041	01.2320	15.01	140129	01.0555	13.18
110061	01.0143	10.61	110154	00.8337	12.68	130009	00.9627	14.78	140042	01.0524	13.30	140130	01.2738	21.67
110062	00.9181	09.73	110155	01.2376	12.27	130010	00.9403	15.04	140043	01.1790	16.37	140132	01.4146	18.58

PAGE 5 OF 16

Provider	Case mix index	Avg. hour wage	Provider	Case mix index	Avg. hour wage	Provider	Case mix index	Avg. hour wage	Provider	Case mix index	Avg. hour wage	Provider	Case mix index	Avg. hour wage
140133	01.3730	19.77	140230	00.9439	15.48	150043	01.0625	16.58	150127	01.0419	14.34	160069	01.4042	16.05
140135	01.3146	14.29	140231	01.6272	19.79	150044	01.2634	17.63	150128	01.2340	18.59	160070	01.0255	13.84
140137	01.0354	13.61	140233	01.7471	16.57	150045	01.0913	15.00	150129	01.1915	20.35	160072	01.0688	12.08
140138	00.9661	12.15	140234	01.1838	15.82	150046	01.5896	16.06	150130	01.1496	15.90	160073	01.0070	11.50
140139	01.0792	13.46	140236	01.0311	12.82	150047	01.6212	17.74	150132	01.3365	19.17	160074	01.1069	12.89
140140	01.1317	13.05	140239	01.5856	18.81	150048	01.1679	16.18	150133	01.2095	14.96	160075	01.1112	13.84
140141	00.8984	13.30	140240	01.5048	20.90	150049	01.0776	13.72	150134	01.2828	16.61	160076	01.0692	16.28
140143	01.0643	15.85	140242	01.5726	22.51	150050	01.1998	14.50	150136	00.9472	18.69	160077	01.1216	10.97
140144	00.9856	16.57	140245	01.1273	13.55	150051	01.3841	16.82	150138	01.1623	.....	160079	01.4245	15.22
140145	01.2030	14.31	140246	01.0570	12.03	150052	01.0743	12.93	150139	01.4806	.....	160080	01.2082	15.41
140146	00.9666	14.85	140250	01.3165	21.35	150053	01.0618	16.69	150141	01.0859	.....	160081	01.0672	14.36
140147	01.1866	13.37	140251	01.3066	18.25	150054	01.1376	12.39	150142	02.4300	.....	160082	01.7545	17.09
140148	01.8018	16.51	140252	01.4201	21.25	150056	01.6228	21.59	150897	04.9892	.....	160083	01.5789	17.49
140150	01.5561	26.00	140253	01.4456	.....	150057	02.3179	15.06	160001	01.2719	16.39	160085	01.0916	12.79
140151	01.1119	17.61	140258	01.5345	21.07	150058	01.6930	18.64	160002	01.1888	13.13	160086	01.0283	12.56
140152	01.0750	22.48	140271	01.0260	13.54	150059	01.3218	18.91	160003	01.0221	11.87	160088	01.0017	13.10
140155	01.1854	16.91	140275	01.2294	18.20	150060	01.1281	12.79	160005	01.1072	12.93	160089	01.1591	14.12
140158	01.2597	21.41	140276	01.9589	20.48	150061	01.2957	15.86	160007	01.0085	12.02	160090	01.0066	13.98
140160	01.2326	15.34	140280	01.2769	16.16	150062	01.0670	15.20	160008	01.1043	13.93	160091	01.0987	10.56
140161	01.1373	17.05	140281	01.6388	20.19	150063	01.0538	18.88	160009	01.1577	13.54	160092	00.9736	12.93
140162	01.7778	18.38	140285	01.2063	14.75	150064	01.2100	16.48	160012	01.0588	14.05	160093	01.1351	15.20
140164	01.2855	16.01	140286	01.1491	17.59	150065	01.1505	15.94	160013	01.2189	16.64	160094	01.2168	14.79
140165	01.1085	13.06	140288	01.7781	22.47	150066	01.0021	13.75	160014	01.0459	12.72	160095	01.0266	12.30
140166	01.2889	16.62	140289	01.3089	15.67	150067	01.1221	14.35	160016	01.2911	15.68	160097	01.0785	13.47
140167	01.1636	14.64	140290	01.3385	19.21	150069	01.2347	16.53	160018	00.9429	13.19	160098	01.0760	13.90
140168	01.1840	15.02	140291	01.2645	22.64	150070	01.0350	16.16	160020	01.0963	12.11	160099	00.9737	12.80
140170	01.1280	12.39	140292	01.1678	19.04	150071	01.1562	12.69	160021	01.0439	13.85	160101	01.1220	17.71
140171	00.9149	12.53	140294	01.1864	16.10	150072	01.1914	15.32	160023	01.1458	13.66	160102	01.3668	14.31
140172	01.5065	18.29	140297	01.2589	21.42	150073	01.0044	15.49	160024	01.5710	17.39	160103	01.0113	12.95
140173	00.9721	13.11	140300	01.6785	25.11	150074	01.5934	19.00	160026	01.0986	15.21	160104	01.2335	19.21
140174	01.4333	18.89	150001	01.0846	16.95	150075	01.2247	13.82	160027	01.1671	13.22	160106	01.0829	14.18
140176	01.2617	18.83	150002	01.4319	19.23	150076	01.1512	19.89	160028	01.3407	17.78	160107	01.1437	13.78
140177	01.2945	16.44	150003	01.7075	18.32	150077	01.2659	16.21	160029	01.4962	17.46	160108	01.1602	14.09
140179	01.3297	19.51	150004	01.4226	19.99	150078	01.0834	17.20	160030	01.2338	16.67	160109	01.1631	12.01
140180	01.5189	20.22	150005	01.1932	17.16	150079	01.1390	13.01	160031	01.1797	13.26	160110	01.4994	17.76
140181	01.3046	18.82	150006	01.2074	16.72	150082	01.4965	18.33	160032	01.1573	14.66	160111	01.1019	10.75
140182	01.3248	19.11	150007	01.2302	17.95	150084	01.8737	21.80	160033	01.7246	15.82	160112	01.4123	14.45
140184	01.1967	14.20	150008	01.3398	18.38	150086	01.3006	15.72	160034	01.0681	13.81	160113	00.9561	11.39
140185	01.4505	16.35	150009	01.3365	16.97	150088	01.1917	16.71	160035	00.9375	11.91	160114	01.0697	14.13
140186	01.3274	18.01	150010	01.2041	16.10	150089	01.3985	18.99	160036	01.0756	12.83	160115	01.0280	13.87
140187	01.4861	16.33	150011	01.2190	16.76	150090	01.2596	19.34	160037	01.1621	14.80	160116	01.1691	15.46
140188	00.9575	10.54	150012	01.6875	20.57	150091	01.0611	15.60	160039	01.0670	15.23	160117	01.3337	15.63
140189	01.1712	15.74	150013	01.1675	13.09	150092	01.0673	12.44	160040	01.3537	16.04	160118	01.0360	12.42
140190	01.1195	13.36	150014	01.4216	18.85	150094	01.0035	16.65	160041	01.0646	12.88	160120	01.0091	09.94
140191	01.3775	23.16	150015	01.2264	17.85	150095	01.1144	15.78	160043	01.0338	13.38	160122	01.1669	14.96
140192	01.1869	16.51	150017	01.8448	17.26	150096	01.0971	17.15	160044	01.1574	13.36	160123	01.1780	12.18
140193	01.0112	12.24	150018	01.2919	17.47	150097	01.1277	16.53	160045	01.6987	17.48	160124	01.2526	15.35
140197	01.2709	16.05	150019	01.1266	13.09	150098	01.1300	11.81	160046	01.0369	11.92	160126	01.1504	13.82
140199	01.0139	15.13	150020	01.1554	13.19	150099	01.3115	17.10	160047	01.3602	15.87	160129	01.0228	13.07
140200	01.4295	20.12	150021	01.6718	18.22	150100	01.6839	18.15	160048	01.0179	11.76	160130	01.1652	13.04
140202	01.3141	20.09	150022	01.1381	17.62	150101	01.0868	14.46	160049	00.9842	12.04	160131	01.1087	12.63
140203	01.1570	19.02	150023	01.4914	17.81	150102	01.0903	14.61	160050	01.0246	14.12	160134	00.9843	11.37
140205	00.9221	13.88	150024	01.4448	16.96	150103	01.0416	17.63	160051	00.9907	12.90	160135	01.0019	13.24
140206	01.0864	19.58	150025	01.4616	16.32	150104	01.1413	15.09	160052	01.0589	14.80	160138	01.0588	13.48
140207	01.3743	26.85	150026	01.1878	16.69	150105	01.4085	16.61	160054	01.0231	10.82	160140	01.0939	14.86
140208	01.6111	23.73	150027	01.0647	16.04	150106	01.1373	15.58	160055	01.0477	11.48	160142	01.0237	13.60
140209	01.7011	17.46	150029	01.2733	20.57	150109	01.4583	16.04	160056	01.0409	13.16	160143	01.1324	13.03
140210	01.0690	12.87	150030	01.1956	16.20	150110	00.9896	14.72	160057	01.3309	15.92	160145	01.0880	13.74
140211	01.2233	20.44	150031	01.0590	15.93	150111	01.2056	12.88	160058	01.6642	18.42	160146	01.4124	15.32
140212	01.3189	22.65	150032	01.7894	18.85	150112	01.2207	16.78	160060	01.0892	13.82	160147	01.2670	15.41
140213	01.2806	20.44	150033	01.6083	20.07	150113	01.1860	16.78	160061	01.0020	14.19	160151	01.0767	12.75
140215	01.1642	13.22	150034	01.3961	18.15	150114	01.0330	13.44	160062	00.9619	11.95	160152	01.0085	13.30
140217	01.2322	20.90	150035	01.4087	17.90	150115	01.3933	17.31	160063	01.2910	14.24	160153	01.7014	17.05
140218	01.0541	13.64	150036	01.0486	17.35	150122	01.1412	15.83	160064	01.6406	16.37	170001	01.2028	15.90
140220	01.1056	14.22	150037	01.2673	17.06	150123	01.1642	12.81	160065	01.0735	14.51	170004	01.0851	13.18
140223	01.5438	.....	150038	01.2744	16.27	150124	01.1229	15.00	160066	01.1266	14.06	170006	01.2031	13.48
140224	01.3604	22.10	150039	01.0121	14.51	150125	01.4243	18.09	160067	01.3705	16.70	170008	00.9823	13.35
140228	01.7003	17.36	150042	01.2850	15.47	150126	01.5058	19.24	160068	01.1116	13.30	170009	01.1211	16.81

PAGE 6 OF 16

Provider	Case mix index	Avg. hour wage	Provider	Case mix index	Avg. hour wage	Provider	Case mix index	Avg. hour wage	Provider	Case mix index	Avg. hour wage	Provider	Case mix index	Avg. hour wage
170010	01.2608	16.38	170090	01.1085	09.58	180012	01.3389	17.14	180104	01.5043	16.55	190064	01.5583	17.46
170011	01.4071	14.59	170092	00.8754	11.45	180013	01.4998	17.38	180105	00.9304	12.23	190065	01.4754	15.75
170012	01.4843	15.48	170093	00.9342	11.58	180014	01.6064	18.86	180106	00.9106	12.65	190071	00.8641	11.38
170013	01.3169	13.27	170094	01.0452	12.81	180015	01.2489	14.91	180108	00.8486	12.49	190077	00.9246	13.41
170014	01.0405	15.18	170095	01.0812	13.80	180016	01.3171	14.91	180115	01.0261	13.72	190078	01.1324	11.21
170015	00.9820	13.74	170097	01.0300	13.42	180017	01.2806	13.52	180116	01.3689	14.92	190079	01.2666	14.76
170016	01.6627	21.80	170098	01.0817	16.21	180018	01.2192	15.73	180117	01.1619	16.14	190081	00.8838	09.89
170017	01.1657	14.73	170099	01.3324	11.00	180019	01.3403	17.22	180118	01.0536	11.72	190083	00.9429	12.45
170018	01.0727	12.23	170100	01.0203	14.63	180020	01.0315	15.37	180120	01.0378	12.49	190086	01.3598	14.02
170019	01.1696	15.13	170101	00.9101	14.13	180021	01.1795	13.25	180121	01.2234	13.09	190088	01.1892	16.01
170020	01.3199	14.54	170102	01.0187	12.78	180023	00.8295	11.27	180122	01.0373	14.67	190089	01.1201	09.60
170022	01.1704	14.15	170103	01.2458	15.28	180024	01.3845	15.69	180123	01.4607	19.39	190090	01.0660	15.75
170023	01.4044	15.57	170104	01.4205	19.52	180025	01.1284	16.18	180124	01.4836	16.00	190092	01.3355	20.14
170024	01.1640	12.71	170105	01.0303	14.45	180026	01.1086	13.66	180125	00.9440	16.23	190095	00.9950	14.04
170025	01.1596	18.37	170106	00.8419	12.54	180027	01.2742	14.17	180126	01.1707	11.90	190098	01.5272	17.56
170026	01.0181	16.38	170108	00.9468	10.88	180028	01.0014	16.19	180127	01.2444	16.63	190099	01.1506	17.31
170027	01.3677	15.02	170109	01.0506	14.67	180029	01.2273	15.99	180128	01.1902	15.40	190102	01.5823	16.15
170030	01.0391	13.61	170110	01.0039	13.62	180030	01.1759	12.89	180129	01.0293	13.93	190103	00.8416	09.66
170031	00.9148	12.36	170112	00.9127	13.44	180031	01.0226	12.38	180130	01.4291	17.87	190106	01.1367	17.27
170032	01.1156	14.18	170113	01.1547	13.43	180032	00.9954	15.30	180132	01.2480	15.19	190109	01.2092	13.68
170033	01.3483	14.08	170114	00.9562	12.96	180033	01.1235	12.57	180133	01.2433	20.73	190110	00.9491	11.96
170034	00.9541	13.74	170115	00.9903	11.01	180034	01.0753	13.61	180134	01.0116	13.71	190111	01.5215	17.24
170035	00.9390	12.37	170116	01.0372	13.94	180035	01.5699	18.26	180136	01.5878	16.63	190112	01.5163	20.35
170036	00.8720	12.31	170117	01.0112	12.63	180036	01.2440	17.36	180137	01.6535	16.82	190113	01.3665	17.85
170037	01.1255	15.02	170119	00.9561	11.32	180037	01.2889	20.29	180138	01.2129	17.02	190114	01.0055	11.51
170038	00.9185	10.94	170120	01.2849	14.66	180038	01.4243	14.73	180139	01.0726	16.41	190115	01.2502	16.88
170039	01.1367	11.69	170122	01.8944	19.69	180040	02.0334	19.04	180140	01.0095	.....	190116	01.3017	14.97
170040	01.5625	18.21	170123	01.7747	17.69	180041	01.0945	13.03	190001	00.9375	16.35	190118	01.0495	11.87
170041	00.9823	11.41	170124	00.9503	11.92	180042	01.1163	13.43	190002	01.6513	16.28	190120	00.9247	12.89
170043	00.9081	13.41	170126	00.9191	11.07	180043	01.0156	15.31	190003	01.4519	17.16	190122	01.2572	13.85
170044	01.1101	14.73	170128	01.0769	14.31	180044	01.0359	14.68	190004	01.3759	14.75	190124	01.5739	18.80
170045	01.0299	10.95	170131	01.0980	10.54	180045	01.2057	16.78	190005	01.6645	14.94	190125	01.5811	16.74
170049	01.3313	18.05	170133	01.1443	14.09	180046	01.2012	16.81	190006	01.2072	14.50	190128	01.2060	17.04
170050	00.8380	09.63	170134	00.9114	12.10	180047	01.0191	13.79	190007	01.0078	12.79	190130	00.9913	11.74
170051	00.9598	13.31	170137	01.1842	16.81	180048	01.1403	15.53	190008	01.6528	17.79	190131	01.2797	17.33
170052	01.0682	13.31	170139	00.9877	11.66	180049	01.3563	14.47	190009	01.2058	13.40	190133	01.0482	15.09
170053	01.0069	13.09	170140	01.0533	11.17	180050	01.2697	15.58	190010	01.0884	14.69	190134	00.9967	12.16
170054	01.0848	12.86	170142	01.2641	16.10	180051	01.4187	14.35	190011	01.1233	14.08	190135	01.4063	21.99
170055	01.0698	17.05	170143	01.1251	12.53	180053	01.1091	14.22	190013	01.4220	15.27	190136	01.1262	10.66
170056	00.9402	10.99	170144	01.6112	18.74	180054	01.1611	14.02	190014	01.0578	15.36	190138	00.6897	15.62
170057	01.0566	13.75	170145	01.1694	17.02	180055	01.0370	13.61	190015	01.2421	16.38	190140	00.9431	11.60
170058	01.1738	17.54	170146	01.4168	17.58	180056	01.1099	16.68	190017	01.3736	17.22	190142	00.9421	12.20
170060	01.1313	12.73	170147	01.2245	18.33	180058	01.0090	12.85	190018	01.1816	13.78	190144	01.2097	18.82
170061	01.1593	12.59	170148	01.4763	18.35	180059	00.9670	11.98	190019	01.5042	17.57	190145	00.9824	13.77
170062	00.9501	10.45	170150	01.0726	13.13	180060	00.7427	13.48	190020	01.2002	15.83	190146	01.5901	18.99
170063	00.8965	09.30	170151	01.0012	11.69	180063	00.9649	10.28	190025	01.2859	12.36	190147	00.9911	13.30
170064	00.9513	11.38	170152	00.9801	13.27	180064	01.2906	14.40	190026	01.4470	15.65	190148	00.8975	11.81
170066	00.9908	12.26	170160	01.0468	11.25	180065	00.9809	09.05	190027	01.4852	15.62	190149	00.9959	11.02
170067	01.0357	11.05	170164	01.0426	13.87	180066	01.2068	16.87	190029	01.1320	14.09	190151	01.1518	12.30
170068	01.3949	14.01	170166	01.1504	13.49	180067	01.8783	15.96	190033	00.9721	09.64	190152	01.4522	20.50
170069	01.1769	13.20	170168	00.9486	09.97	180069	01.0397	16.08	190034	01.2434	14.93	190155	00.9203	10.54
170070	01.0225	11.83	170171	01.0889	11.15	180070	01.0977	14.86	190035	01.4128	20.27	190156	00.8945	11.89
170072	00.9565	11.53	170172	00.9841	11.07	180072	01.0513	13.80	190036	01.6475	18.96	190158	01.2308	20.36
170073	01.0984	12.66	170174	01.0890	11.58	180075	00.9736	13.08	190037	00.9653	11.05	190160	01.2187	15.56
170074	01.1552	12.86	170175	01.2928	16.30	180078	01.1230	17.35	190039	01.4080	16.41	190161	01.0441	12.98
170075	00.8720	10.55	170176	01.5021	18.40	180079	01.2486	13.22	190040	01.3863	19.03	190162	01.1806	21.04
170076	01.0770	11.15	170181	01.1668	.....	180080	01.0636	15.16	190041	01.4973	19.72	190164	01.2246	16.86
170077	00.9689	11.12	170182	00.8647	.....	180085	01.2892	17.49	190043	01.1348	12.38	190166	01.0758	14.81
170079	01.0810	11.81	170183	02.1585	.....	180087	01.0887	13.72	190044	01.1634	18.27	190167	01.2058	16.09
170080	00.9459	11.05	180001	01.2246	16.18	180088	01.5722	19.42	190045	01.3672	19.09	190170	00.9592	12.34
170081	00.9294	10.42	180002	01.0070	17.16	180092	01.0482	14.43	190046	01.4814	17.16	190173	01.4578	19.47
170082	01.0577	10.60	180004	01.0888	13.51	180093	01.3617	14.72	190048	01.0669	14.55	190175	01.2835	.....
170084	00.9862	11.06	180005	01.0390	17.40	180094	01.0163	11.93	190049	00.9644	14.74	190176	01.7028	18.06
170085	00.9109	12.01	180006	00.9063	08.63	180095	01.1664	12.78	190050	01.0420	13.90	190177	01.6125	22.02
170086	01.7190	18.04	180007	01.5485	14.17	180099	01.1988	11.72	190053	01.0567	11.98	190178	00.9868	11.20
170087	01.4582	18.87	180009	01.3310	17.70	180101	01.3486	18.84	190054	01.4052	13.67	190182	01.1720	20.12
170088	00.9139	10.59	180010	01.8382	16.91	180102	01.5215	15.95	190059	00.9447	13.58	190183	01.1294	13.43
170089	01.0037	14.21	180011	01.1737	15.71	180103	02.0850	18.62	190060	01.4907	16.51	190184	01.0550	12.13

PAGE 7 OF 16

Provider	Case mix index	Avg. hour wage	Provider	Case mix index	Avg. hour wage	Provider	Case mix index	Avg. hour wage	Provider	Case mix index	Avg. hour wage	Provider	Case mix index	Avg. hour wage
190185	01.3116	19.03	210004	01.3245	20.30	220030	01.0852	16.42	220171	01.6972	22.55	230103	01.0124	17.37
190186	00.9539	11.69	210005	01.2407	17.70	220031	01.8518	27.21	220897	04.8084	.....	230104	01.6163	20.32
190187	00.7801	14.05	210006	01.1291	16.84	220033	01.3898	19.40	230001	01.2015	15.98	230105	01.6088	19.46
190189	00.9445	14.54	210007	01.6215	18.82	220035	01.2698	19.72	230002	01.2238	19.28	230106	01.1784	18.07
190190	00.9291	18.74	210008	01.3146	21.21	220036	01.6218	23.26	230003	01.0945	18.07	230107	00.8964	12.56
190191	01.3068	18.47	210009	01.7134	18.57	220038	01.2841	21.85	230004	01.6105	20.95	230108	01.2432	16.64
190194	01.1471	19.16	210010	01.1960	17.00	220041	01.2492	20.87	230005	01.2825	18.02	230110	01.3309	17.10
190196	00.9097	16.46	210011	01.2110	20.12	220042	01.2078	24.10	230006	01.1303	16.19	230111	00.9772	15.13
190197	01.2655	18.80	210012	01.4840	21.27	220046	01.3942	21.48	230007	01.0869	16.51	230113	00.9511	17.66
190199	01.3623	.....	210013	01.2780	20.65	220049	01.2664	21.58	230013	01.2659	20.70	230114	00.6368	23.27
190200	01.5241	21.33	210015	01.2720	18.48	220050	01.0888	17.45	230015	01.1338	18.01	230115	01.0164	15.14
190201	01.2315	18.24	210016	01.7279	20.37	220051	01.2702	19.70	230017	01.5125	20.40	230116	00.9155	15.58
190202	01.4459	18.34	210017	01.1256	15.35	220052	01.2994	22.76	230019	01.5077	20.50	230117	01.9674	23.81
190203	01.6074	19.50	210018	01.2414	20.93	220053	01.2564	18.86	230020	01.7180	21.17	230118	01.2419	17.25
190204	01.5314	20.12	210019	01.4011	17.42	220055	01.3486	20.61	230021	01.6010	17.25	230119	01.3145	21.13
190205	01.8790	17.63	210022	01.4536	20.07	220057	01.4381	20.91	230022	01.2422	17.62	230120	01.2315	19.00
190206	01.4995	21.17	210023	01.2956	20.31	220058	01.0650	17.55	230024	01.4216	21.79	230121	01.2320	19.67
190207	01.1825	19.43	210024	01.5336	18.06	220060	01.2565	24.78	230027	01.0587	16.25	230122	01.3296	18.32
190208	00.8198	10.36	210025	01.3227	17.84	220062	00.6021	19.30	230029	01.5998	20.91	230124	01.1555	16.49
190218	01.1389	15.05	210026	01.3187	24.54	220063	01.2909	18.42	230030	01.2415	16.55	230125	01.3676	12.83
190223	00.5039	09.72	210027	01.2046	17.10	220064	01.2167	20.66	230031	01.4660	18.32	230128	01.3700	19.33
190227	00.8050	30.01	210028	01.2256	16.66	220065	01.2182	20.00	230032	01.7444	18.97	230129	01.8923	19.07
190230	00.8737	.....	210029	01.3064	20.04	220066	01.2760	19.39	230034	01.1948	16.64	230130	01.6884	22.37
190231	01.2825	.....	210030	01.0993	15.77	220067	01.2944	22.82	230035	01.1377	15.84	230132	01.5373	22.92
190232	01.6623	.....	210031	01.6370	16.97	220068	00.5244	15.95	230036	01.2807	19.78	230133	01.2350	14.06
190233	01.0997	.....	210032	01.2096	18.42	220070	01.2635	17.77	230037	01.1606	16.96	230134	01.1081	15.87
200001	01.2712	15.74	210033	01.1818	17.38	220071	01.8550	24.38	230038	01.6451	21.18	230135	01.1885	19.88
200002	01.0212	16.15	210034	01.3996	20.29	220073	01.3882	25.34	230040	01.1976	18.35	230137	01.1691	17.78
200003	01.1264	15.90	210035	01.1952	17.25	220074	01.2614	21.18	230041	01.2085	18.20	230141	01.6883	20.84
200006	01.0731	14.95	210037	01.2887	16.14	220075	01.3228	20.09	230042	01.1542	19.03	230142	01.2092	18.71
200007	01.0066	15.63	210038	01.3413	19.90	220076	01.1851	22.47	230046	01.8239	24.65	230143	01.1481	15.23
200008	01.2497	18.34	210039	01.1613	15.25	220077	01.7122	22.32	230047	01.3070	19.61	230144	01.1092	21.06
200009	01.7602	19.84	210040	01.2993	20.32	220079	01.1880	21.28	230053	01.5387	23.82	230145	01.1742	15.41
200012	01.1641	16.11	210043	01.2569	20.04	220080	01.2773	17.77	230054	01.8228	19.74	230146	01.2845	19.49
200013	01.1401	15.32	210044	01.2000	20.28	220081	00.9446	23.55	230055	01.1760	17.36	230147	01.4742	19.34
200015	01.2358	17.15	210045	01.0148	11.73	220082	01.2902	19.28	230056	00.9776	14.17	230149	01.2419	14.92
200016	01.0350	16.10	210046	01.1079	12.34	220083	01.1831	19.80	230058	01.0786	17.42	230151	01.3631	21.32
200017	01.2447	16.86	210048	01.1746	22.47	220084	01.2425	22.24	230059	01.4842	19.00	230153	01.1118	15.61
200018	01.1602	14.27	210049	01.1517	16.57	220086	01.5483	24.60	230060	01.2882	16.90	230154	00.9493	12.09
200019	01.2486	18.01	210051	01.4541	13.94	220088	01.5778	21.76	230062	01.0291	10.93	230155	00.9752	13.80
200020	01.1930	19.86	210054	01.2790	20.17	220089	01.3304	22.99	230063	01.3106	18.41	230156	01.6989	21.57
200021	01.1723	17.66	210055	01.2914	22.48	220090	01.2260	20.78	230065	01.4805	18.63	230157	01.2084	19.67
200023	00.8814	14.61	210056	01.4132	16.51	220092	01.2533	20.86	230066	01.3629	17.55	230159	01.3614	18.93
200024	01.2940	19.16	210057	01.3587	.....	220094	01.2679	19.76	230068	01.4269	22.29	230162	00.9841	13.73
200025	01.2732	18.81	210058	01.6842	18.09	220095	01.2234	17.77	230069	01.1751	18.86	230165	01.8763	20.92
200026	01.0896	15.20	210059	01.2581	21.91	220098	01.2884	19.81	230070	01.4926	19.30	230167	01.3662	19.18
200027	01.1423	16.51	210060	01.1731	25.28	220099	01.1644	15.97	230071	01.1363	20.78	230169	01.4366	21.16
200028	00.9339	14.83	210061	01.0980	14.25	220100	01.2619	23.48	230072	01.2879	18.87	230171	00.9849	14.18
200031	01.2965	14.96	220001	01.1636	20.98	220101	01.5059	22.58	230075	01.5257	19.29	230172	01.3176	17.85
200032	01.3588	17.72	220002	01.5368	21.62	220104	01.2419	23.12	230076	01.3128	21.53	230174	01.3016	19.11
200033	01.7105	19.57	220003	01.0806	16.92	220105	01.2111	21.97	230077	01.9772	18.44	230176	01.2388	20.89
200034	01.1962	17.19	220004	01.1812	18.85	220106	01.2458	21.83	230078	01.0869	14.76	230178	01.0320	16.02
200037	01.2193	15.53	220006	01.4332	21.79	220107	01.1742	18.46	230080	01.1933	20.41	230180	01.0676	15.03
200038	01.1145	17.66	220008	01.2523	19.26	220108	01.1503	20.96	230081	01.2191	16.55	230184	01.2246	16.99
200039	01.2494	18.06	220010	01.2949	20.94	220110	01.9520	30.07	230082	01.1643	14.88	230186	01.3835	15.81
200040	01.0969	16.12	220011	01.1570	27.95	220111	01.2612	21.21	230085	01.1115	17.10	230188	01.1787	15.49
200041	01.2255	17.37	220012	01.3654	27.84	220116	01.9484	23.95	230086	00.9885	14.03	230189	00.8927	14.50
200043	00.5362	16.96	220015	01.1767	20.35	220118	02.0446	26.47	230087	01.0641	13.65	230190	01.0483	22.66
200050	01.2051	16.71	220016	01.3547	20.16	220119	01.3255	24.40	230089	01.3379	21.55	230191	00.8947	14.99
200051	00.9656	17.70	220017	01.4233	23.78	220123	01.0371	23.85	230092	01.3295	17.77	230193	01.2340	16.03
200052	00.9605	13.07	220019	01.1716	17.06	220126	01.3077	19.39	230093	01.2320	17.37	230194	01.2090	14.37
200055	01.1609	14.56	220020	01.2174	18.47	220128	01.1494	20.85	230095	01.2251	15.53	230195	01.2803	19.80
200062	00.9155	14.64	220021	01.3823	23.21	220133	00.8435	30.53	230096	01.1954	19.85	230197	01.2564	22.00
200063	01.1630	16.63	220023	01.1522	19.37	220135	01.2581	23.97	230097	01.5433	17.75	230199	01.1386	17.72
200066	01.1762	14.34	220024	01.1696	20.14	220153	01.0459	19.74	230099	01.2223	19.06	230201	01.2166	14.02
210001	01.4081	17.94	220025	01.1948	18.87	220154	00.8972	18.96	230100	01.1604	15.19	230204	01.3584	19.78
210002	01.9534	16.84	220028	01.4680	22.20	220162	01.0891	.....	230101	01.0566	16.79	230205	01.0607	14.54
210003	01.5503	22.97	220029	01.1933	22.25	220163	02.0719	24.73	230102	01.1047	.....	230207	01.2544	19.85

PAGE 8 OF 16

Provider	Case mix index	Avg. hour wage	Provider	Case mix index	Avg. hour wage	Provider	Case mix index	Avg. hour wage	Provider	Case mix index	Avg. hour wage	Provider	Case mix index	Avg. hour wage
230208	01.1783	16.10	240047	01.5215	18.27	240132	01.2422	20.49	250034	01.5418	12.99	250138	01.3553	16.91
230211	00.9786	13.86	240048	01.2786	20.43	240133	01.1715	16.16	250035	00.9041	11.82	250140	00.9213	09.37
230212	01.0964	21.13	240049	01.7763	20.33	240135	00.8386	11.38	250036	00.9863	11.34	250141	01.2142	15.50
230213	01.0251	12.69	240050	01.1234	19.89	240137	01.2521	15.40	250037	00.8717	09.53	250144	00.9383	11.18
230216	01.5363	17.91	240051	00.9749	15.97	240138	00.8953	13.09	250038	00.9909	12.52	250145	00.9362	.....
230217	01.2142	18.06	240052	01.2480	17.21	240139	00.9551	14.24	250039	01.0004	11.71	250146	01.0020	12.89
230219	01.0153	15.18	240053	01.5190	19.67	240141	01.0836	19.12	250040	01.2911	15.65	250148	01.1589	.....
230221	01.1831	18.15	240056	01.2490	20.13	240142	01.1491	15.16	250042	01.1491	13.78	250149	00.9157	.....
230222	01.3602	18.98	240057	01.7418	22.04	240143	01.0673	12.48	250043	01.0303	10.49	260001	01.6548	15.06
230223	01.3164	19.85	240058	00.9730	09.64	240144	00.9419	13.39	250044	00.9825	13.98	260002	01.4785	20.05
230227	01.5246	22.00	240059	01.1011	17.98	240145	00.9681	12.37	250045	01.1454	17.17	260003	00.9487	12.45
230228	01.2133	17.29	240061	01.7409	20.93	240146	00.9270	17.20	250047	00.9527	09.12	260004	01.0315	11.86
230230	01.5449	20.38	240063	01.4559	20.88	240148	00.9433	11.34	250048	01.4527	13.51	260005	01.6121	19.68
230232	01.0330	15.87	240064	01.2630	18.13	240150	00.8874	11.72	250049	00.9058	09.93	260006	01.5286	16.72
230235	01.1141	14.65	240065	01.1480	11.14	240152	01.0177	17.85	250050	01.2448	12.30	260007	01.4659	16.03
230236	01.3372	21.07	240066	01.3895	19.08	240153	01.0210	14.30	250051	00.8585	09.44	260008	01.2051	13.88
230239	01.1697	16.07	240069	01.1596	18.31	240154	01.0138	13.15	250057	01.1766	14.06	260009	01.2372	15.63
230241	01.1519	17.08	240071	01.1245	18.05	240155	00.9817	14.39	250058	01.1385	13.65	260011	01.6786	16.21
230244	01.3177	20.14	240072	01.0272	16.08	240157	01.1265	13.92	250059	01.0322	12.16	260012	01.0505	11.96
230253	01.0740	17.39	240073	00.9172	15.13	240160	00.9997	14.65	250060	00.8084	12.19	260013	01.1491	12.68
230254	01.2799	22.64	240075	01.2180	18.79	240161	00.9389	14.56	250061	00.8634	10.75	260014	01.7751	17.84
230257	01.1068	19.01	240076	01.1373	19.69	240162	00.9645	15.28	250063	00.8596	12.68	260015	01.2666	13.16
230259	01.1982	19.06	240077	01.0463	14.15	240163	00.9330	14.10	250065	00.8907	11.72	260017	01.2286	13.94
230264	00.9438	16.74	240078	01.4536	21.46	240166	01.1669	14.67	250066	00.9404	12.17	260018	00.9652	09.56
230269	01.3034	21.71	240079	01.0176	12.57	240169	00.9534	15.25	250067	01.1253	14.14	260019	00.9816	12.63
230270	01.2162	20.08	240080	01.3774	20.87	240170	01.1564	14.42	250068	00.8556	11.19	260020	01.7259	18.73
230273	01.6607	22.11	240082	01.1194	14.55	240171	00.9950	14.02	250069	01.1870	13.42	260021	01.5153	17.51
230275	00.5787	16.53	240083	01.3925	16.60	240172	01.0869	14.50	250071	00.9541	08.06	260022	01.3501	18.69
230276	00.8129	16.23	240084	01.3436	17.20	240173	00.9599	14.82	250072	01.2914	16.67	260023	01.2567	15.57
230277	01.2425	21.76	240085	00.9247	14.90	240179	01.0022	14.30	250076	00.9579	10.32	260024	01.0210	12.28
230278	02.0914	19.50	240086	01.0520	15.23	240180	01.0157	10.51	250077	00.9505	11.08	260025	01.3121	13.61
230279	00.6989	.....	240087	01.0824	15.69	240184	01.0424	11.31	250078	01.4419	14.21	260027	01.5941	18.92
230280	01.0281	.....	240088	01.4444	18.10	240187	01.2617	16.56	250079	00.8562	15.12	260029	01.1264	15.76
230281	01.7080	.....	240089	01.0010	15.23	240193	01.0582	14.73	250081	01.3034	15.19	260030	01.0891	09.73
240001	01.5708	21.24	240090	01.0970	13.57	240196	00.6132	22.50	250082	01.2857	12.30	260031	01.4989	18.67
240002	01.6938	19.40	240093	01.3186	16.49	240200	00.8962	13.34	250083	01.0251	11.01	260032	01.5795	17.59
240004	01.4661	20.16	240094	01.0543	17.26	240205	00.9014	.....	250084	01.0930	13.92	260034	00.9785	14.22
240005	00.9960	13.49	240096	01.0160	14.12	240206	00.8472	.....	250085	01.0093	11.42	260035	01.0729	11.44
240006	01.1385	19.75	240097	01.1270	17.05	240207	01.2326	21.47	250088	00.9591	15.56	260036	01.0628	15.72
240007	01.1171	15.15	240098	00.9677	16.41	240210	01.2588	21.44	250089	01.0276	11.77	260037	01.4003	15.17
240008	01.0569	15.22	240099	01.1143	11.00	240211	00.9532	11.18	250093	01.1064	12.17	260039	01.1432	11.17
240009	00.9895	14.18	240100	01.3089	19.58	240212	01.9942	.....	250094	01.2377	14.41	260040	01.6075	14.92
240010	01.9742	20.17	240101	01.1581	17.32	250001	01.6688	15.91	250095	00.9795	13.57	260042	01.4257	15.65
240011	01.1400	15.69	240102	00.8915	12.27	250002	00.7926	13.34	250096	01.2945	16.48	260044	01.0361	14.29
240013	01.3150	15.90	240103	01.0772	14.10	250003	01.0305	14.13	250097	01.1910	13.83	260047	01.3634	14.19
240014	01.0820	17.79	240104	01.2345	21.68	250004	01.4613	15.12	250098	00.8668	13.73	260048	01.2847	18.05
240016	01.3076	15.46	240105	01.0028	12.70	250005	00.9643	09.15	250099	01.2680	12.73	260050	01.0968	14.71
240017	01.1439	15.15	240106	01.3245	23.78	250006	00.9651	12.27	250100	01.2315	14.53	260052	01.3337	15.95
240018	01.2866	15.82	240107	00.9788	15.07	250007	01.2618	16.88	250101	00.9408	09.89	260053	01.1331	09.46
240019	01.2275	19.58	240108	00.9539	11.64	250008	00.8996	11.36	250102	01.5414	14.80	260054	01.3206	15.14
240020	01.1482	18.11	240109	00.9922	13.59	250009	01.1809	15.04	250104	01.3619	15.58	260055	01.0378	13.67
240021	00.9369	12.49	240110	01.0305	15.18	250010	01.0381	11.07	250105	00.9206	13.13	260057	01.1548	13.85
240022	01.1174	17.33	240111	00.9867	13.06	250012	00.9568	13.77	250107	00.9087	14.16	260059	01.1275	14.17
240023	01.0074	15.86	240112	01.0531	13.30	250015	01.0942	09.75	250109	00.9352	11.54	260061	01.1793	10.87
240025	01.1734	15.02	240114	00.9888	11.13	250017	01.0107	13.77	250112	00.9947	14.22	260062	01.1602	19.89
240027	01.0011	12.60	240115	01.6063	22.30	250018	00.9603	09.81	250117	01.0705	13.28	260063	01.1913	14.82
240028	01.1386	16.50	240116	00.9465	12.43	250019	01.4259	17.43	250119	01.2047	10.80	260064	01.3295	15.38
240029	01.1610	15.70	240117	01.0697	16.21	250020	01.0082	10.70	250120	01.0645	12.04	260065	01.7778	15.31
240030	01.3037	16.78	240119	00.8486	16.93	250021	00.8579	07.74	250122	01.2735	15.87	260066	01.0927	13.19
240031	00.9361	13.50	240121	00.9008	16.90	250023	00.8647	11.22	250123	01.3262	17.72	260067	00.9820	10.43
240036	01.5543	19.05	240122	01.0504	16.80	250024	00.9894	08.25	250124	00.9137	10.69	260068	01.6715	18.49
240037	01.0408	16.40	240123	01.0498	13.30	250025	01.1455	13.58	250125	01.3231	18.35	260070	01.0862	11.09
240038	01.4454	22.37	240124	01.0139	15.71	250027	01.0256	10.40	250126	00.9923	10.22	260073	00.9681	11.58
240040	01.2251	17.67	240125	00.9399	10.75	250029	00.8872	11.87	250127	00.7630	.....	260074	01.2427	14.81
240041	01.2877	14.43	240127	01.0142	12.51	250030	00.9688	11.39	250128	01.1010	12.64	260077	01.7271	16.15
240043	01.1990	16.83	240128	01.1180	14.55	250031	01.3157	17.20	250131	01.0539	09.36	260078	01.1782	12.39
240044	01.2046	16.02	240129	01.0153	12.18	250032	01.2551	15.70	250134	00.9795	12.70	260079	00.9824	11.78
240045	01.0655	18.49	240130	01.0151	14.54	250033	00.9921	11.57	250136	00.7871	16.84	260080	00.9654	09.77

PAGE 9 OF 16

Provider	Case mix index	Avg. hour wage	Provider	Case mix index	Avg. hour wage	Provider	Case mix index	Avg. hour wage	Provider	Case mix index	Avg. hour wage	Provider	Case mix index	Avg. hour wage
260081	01.4971	16.44	270004	01.6477	16.49	280026	01.1254	12.80	280115	00.9809	13.59	310017	01.3295	21.95
260082	01.1231	13.50	270006	01.0290	18.67	280028	01.0559	13.64	280117	01.2229	14.48	310018	01.2194	21.06
260085	01.5684	18.57	270007	00.9630	12.26	280029	01.0506	12.62	280118	00.9757	13.28	310019	01.6403	20.84
260086	01.0649	12.67	270009	01.0387	14.91	280030	01.7392	23.13	280119	00.8364	.....	310020	01.1974	19.66
260089	00.9614	13.31	270011	01.1242	.....	280031	01.0575	12.48	280123	00.7918	.....	310021	01.3472	21.15
260091	01.6022	18.86	270012	01.5945	17.10	280032	01.3182	15.11	290001	01.6372	22.35	310022	01.2384	19.38
260094	01.1872	14.91	270013	01.2847	16.78	280033	00.9766	13.62	290002	00.8981	17.99	310024	01.2566	22.60
260095	01.4432	16.05	270014	01.7192	15.97	280034	01.2078	13.41	290003	01.6179	21.15	310025	01.2260	21.92
260096	01.5521	21.52	270016	00.8187	11.51	280035	00.9433	11.75	290005	01.4399	19.66	310026	01.2647	21.91
260097	01.1913	15.82	270017	01.2275	18.32	280037	01.0146	13.55	290006	01.2170	16.54	310027	01.3646	18.17
260100	00.9630	13.12	270019	01.0625	13.34	280038	01.0763	13.39	290007	01.8961	25.07	310028	01.1530	20.46
260102	01.0125	16.75	270021	01.1007	15.55	280039	01.1970	14.24	290008	01.2200	17.14	310029	01.8925	20.69
260103	01.3849	16.73	270023	01.2916	18.76	280040	01.5940	18.30	290009	01.6244	21.07	310031	02.5990	24.14
260104	01.6403	19.57	270024	00.9931	11.15	280041	01.0014	10.95	290010	01.2053	19.33	310032	01.2921	20.00
260105	01.8664	19.47	270026	00.8654	11.95	280042	01.0880	13.22	290011	00.8812	14.39	310034	01.2545	19.14
260107	01.3815	18.77	270027	01.0389	12.69	280043	01.1268	12.75	290012	01.4385	19.97	310036	01.2092	18.44
260108	01.8100	17.90	270028	01.0741	14.91	280045	01.1401	13.48	290013	01.0185	14.85	310037	01.3076	24.97
260109	00.9959	11.92	270029	00.9031	14.51	280046	01.0732	11.09	290014	01.0444	16.52	310038	01.9146	22.82
260110	01.6120	14.16	270031	00.8747	09.71	280047	01.1620	15.70	290015	00.9730	15.38	310039	01.2871	20.51
260111	00.9980	08.04	270032	01.1788	16.46	280048	01.0800	11.17	290016	01.1392	18.71	310040	01.2688	23.12
260112	01.4171	17.75	270033	00.8766	11.39	280049	01.0408	13.82	290019	01.2774	17.92	310041	01.3218	22.90
260113	01.1053	14.05	270035	01.0275	15.87	280050	00.9290	13.11	290020	01.0859	17.65	310042	01.2459	21.74
260115	01.2345	14.63	270036	00.9483	10.42	280051	01.0735	13.72	290021	01.5601	19.17	310043	01.2080	20.60
260116	01.1223	13.70	270039	01.0661	11.99	280052	01.0491	11.85	290022	01.7399	22.47	310044	01.3055	20.16
260119	01.1640	14.93	270040	01.0825	17.60	280054	01.2628	17.92	290027	00.9567	14.68	310045	01.3849	25.76
260120	01.1599	15.72	270041	01.0693	11.14	280055	00.9347	11.63	290029	00.9400	.....	310047	01.3410	23.05
260122	01.1502	13.12	270044	01.1913	13.40	280056	00.9886	10.99	290032	01.4149	18.66	310048	01.1852	20.69
260123	01.0312	11.56	270046	00.9346	13.50	280057	01.0055	14.48	290038	01.1064	.....	310049	01.3294	23.54
260127	00.9514	13.71	270048	01.0940	13.30	280058	01.3123	13.75	300001	01.3957	20.70	310050	01.2677	20.88
260128	00.9851	08.95	270049	01.8346	18.19	280060	01.5884	18.35	300003	01.8607	20.92	310051	01.3207	24.26
260129	01.2124	13.51	270050	01.0380	15.96	280061	01.4628	14.76	300005	01.2620	18.65	310052	01.2545	20.53
260131	01.2940	16.32	270051	01.2980	17.65	280062	01.2187	11.92	300006	01.1221	16.24	310054	01.2880	23.19
260134	01.1526	13.82	270052	01.0663	18.02	280064	01.0759	12.61	300007	01.1527	16.76	310056	01.1826	20.11
260137	01.2614	13.71	270053	00.8678	09.53	280065	01.2879	16.22	300008	01.2481	16.95	310057	01.2933	20.10
260138	01.9711	20.66	270057	01.1715	17.35	280066	01.0191	11.38	300009	01.0977	17.45	310058	01.1025	25.35
260141	01.8695	16.53	270058	00.9411	11.20	280068	00.9659	09.31	300010	01.2364	17.80	310060	01.2116	17.55
260142	01.1566	14.50	270059	00.8676	19.21	280070	01.0724	10.75	300011	01.3481	21.53	310061	01.2085	19.85
260143	00.9463	10.52	270060	00.9702	11.92	280073	01.0386	12.78	300012	01.2749	21.64	310062	01.2936	23.90
260147	01.0469	12.81	270063	00.8933	12.94	280074	01.1165	12.87	300013	01.2241	16.87	310063	01.3528	20.78
260148	00.9572	09.33	270068	00.8629	12.38	280075	01.2096	12.90	300014	01.2293	18.41	310064	01.2956	21.35
260158	01.1275	11.80	270072	00.8605	14.88	280076	01.0719	12.54	300015	01.1807	17.56	310067	01.3198	21.14
260159	01.2924	18.02	270073	01.0764	11.06	280077	01.3635	17.36	300016	01.3137	17.41	310069	01.1292	18.19
260160	01.0663	14.07	270074	00.8832	.....	280079	01.0636	09.40	300017	01.2137	20.49	310070	01.3977	22.16
260162	01.7006	17.70	270075	00.8610	.....	280080	01.0860	11.34	300018	01.2397	18.85	310072	01.3053	20.74
260163	01.3037	14.11	270076	00.8395	.....	280081	01.5614	17.24	300019	01.2613	18.43	310073	01.5567	22.31
260164	01.0000	12.07	270079	00.9594	13.36	280082	01.0967	13.03	300020	01.2666	19.78	310074	01.4153	21.08
260166	01.2144	21.51	270080	01.1499	14.27	280083	01.0671	15.64	300021	01.1635	15.69	310075	01.2965	21.67
260172	01.0176	12.07	270081	01.0780	09.77	280084	01.0314	10.92	300022	01.0939	17.08	310076	01.3883	28.16
260173	00.9560	11.15	270082	01.0050	16.10	280085	00.7201	14.72	300023	01.3251	20.13	310077	01.5000	23.09
260175	01.1270	14.60	270083	01.1179	10.96	280088	01.8180	17.33	300024	01.2662	16.56	310078	01.3399	22.70
260176	01.6758	18.44	270084	00.9031	12.77	280089	01.0614	13.79	300028	01.2716	15.52	310081	01.2643	20.80
260177	01.3871	19.46	280001	01.0866	14.11	280090	00.9838	11.70	300029	01.3165	21.79	310083	01.2405	22.20
260178	01.4760	19.06	280003	01.9467	18.11	280091	01.1320	13.17	300033	01.1041	13.70	310084	01.2611	20.43
260179	01.5653	18.02	280005	01.3791	16.72	280092	00.8959	11.63	300034	01.9294	21.31	310086	01.1743	20.89
260180	01.7024	18.45	280009	01.7304	16.70	280094	01.1287	13.55	310001	01.7682	24.56	310087	01.2357	18.95
260183	01.6443	16.51	280011	00.9606	11.56	280097	01.0459	12.56	310002	01.7260	25.58	310088	01.2439	19.57
260186	01.2600	15.20	280012	01.2348	14.88	280098	01.0110	09.68	310003	01.2210	23.16	310090	01.1901	22.86
260188	01.2714	15.70	280013	02.0127	19.71	280101	01.1114	10.92	310005	01.2226	19.20	310091	01.2170	21.35
260189	00.9400	11.23	280014	01.0034	10.78	280102	01.1187	11.77	310006	01.2198	19.02	310092	01.3046	20.52
260190	01.2072	18.46	280015	01.0314	13.78	280104	00.9608	09.88	310008	01.2739	21.23	310093	01.2163	19.52
260191	01.1707	19.44	280017	01.1537	13.42	280105	01.2920	16.46	310009	01.2782	21.35	310096	01.9004	21.19
260193	01.2240	19.13	280018	01.1931	12.25	280106	00.9402	13.23	310010	01.2912	21.05	310105	01.1999	22.41
260195	01.1660	.....	280020	01.5257	18.97	280107	01.0294	12.36	310011	01.3017	21.71	310108	01.3824	21.08
260197	01.3182	20.38	280021	01.3499	14.01	280108	01.1461	13.26	310012	01.5940	23.47	310110	01.2143	19.69
260198	01.2213	14.98	280022	00.9770	11.07	280109	00.9501	10.61	310013	01.2768	19.91	310111	01.2557	19.70
260200	01.3554	19.14	280023	01.3780	13.73	280110	00.9942	10.88	310014	01.7025	23.69	310112	01.2426	20.58
270002	01.1911	13.92	280024	01.0114	13.22	280111	01.2372	16.06	310015	01.7776	24.34	310113	01.2089	20.70
270003	01.2465	18.65	280025	00.9810	11.07	280114	00.9353	10.26	310016	01.2225	22.93	310115	01.1943	19.78

PAGE 10 OF 16

Provider	Case mix index	Avg. hour wage	Provider	Case mix index	Avg. hour wage	Provider	Case mix index	Avg. hour wage	Provider	Case mix index	Avg. hour wage	Provider	Case mix index	Avg. hour wage
310116	01.2919	21.67	330028	01.3448	23.76	330132	01.1620	13.74	330233	01.5441	29.08	330399	01.3239	29.65
310118	01.1849	21.86	330029	01.1111	17.36	330133	01.3428	28.31	330234	02.1918	24.17	340001	01.4951	19.39
310119	01.5594	27.27	330030	01.2349	14.89	330135	01.2563	16.25	330235	01.1332	17.37	340002	01.8825	18.53
310120	01.0603	17.24	330033	01.2846	13.46	330136	01.2637	20.45	330236	01.3832	26.18	340003	01.1188	16.56
310121	01.0460	16.61	330034	00.7718	36.61	330140	01.7132	17.19	330238	01.1820	14.53	340004	01.4966	17.21
320001	01.4620	16.76	330036	01.3298	21.00	330141	01.3504	23.17	330239	01.2013	15.44	340005	01.2221	14.57
320002	01.4159	21.55	330037	01.1242	15.17	330144	00.9758	13.17	330240	01.3354	26.47	340006	01.2338	14.56
320003	01.1576	15.57	330038	01.2140	14.91	330148	01.0784	14.39	330241	01.8652	20.92	340007	01.1848	14.81
320004	01.2677	17.86	330039	00.8486	13.18	330151	01.0421	13.73	330242	01.3516	18.35	340008	01.1458	16.48
320005	01.3217	17.80	330041	01.3912	27.81	330152	01.4273	27.77	330245	01.2716	17.15	340009	01.4043	18.58
320006	01.3699	15.02	330043	01.2400	25.15	330153	01.6522	17.44	330246	01.2502	22.99	340010	01.3129	16.41
320009	01.5348	16.75	330044	01.2405	16.99	330154	01.5884	.....	330247	00.7071	26.49	340011	01.1134	13.98
320011	00.9939	17.79	330045	01.4167	24.83	330157	01.3091	18.41	330249	01.2314	15.89	340012	01.2605	15.82
320012	01.0231	16.57	330046	01.5105	28.39	330158	01.3668	24.33	330250	01.3166	16.01	340013	01.2719	16.58
320013	01.2225	18.28	330047	01.2265	16.63	330159	01.3291	17.35	330252	00.9141	15.40	340014	01.5921	22.15
320014	01.0141	08.42	330048	01.2888	16.10	330160	01.4618	26.09	330254	01.0327	15.52	340015	01.2388	16.44
320016	01.1571	12.00	330049	01.2436	17.52	330161	00.7163	16.00	330258	01.4234	25.28	340016	01.1961	15.18
320017	01.2175	17.67	330053	01.1270	14.39	330162	01.2602	26.18	330259	01.4434	21.99	340017	01.2581	15.69
320018	01.4643	16.61	330055	01.5089	29.02	330163	01.2099	17.75	330261	01.2224	24.35	340018	01.1212	14.78
320019	01.4799	19.01	330056	01.4367	28.30	330164	01.3999	18.96	330263	00.9948	17.00	340019	01.0453	13.69
320021	01.7045	20.62	330057	01.7192	15.43	330166	00.9641	13.96	330264	01.2753	20.00	340020	01.1711	17.33
320022	01.1678	16.34	330058	01.3255	15.69	330167	01.6419	27.45	330265	01.3114	15.78	340021	01.2221	15.08
320023	01.0224	13.29	330059	01.6149	29.66	330169	01.4285	31.70	330267	01.2789	22.78	340022	01.0451	14.56
320030	00.9845	16.54	330061	01.2961	23.38	330171	01.2758	21.15	330268	00.9689	15.79	340023	01.3842	18.44
320031	00.8961	14.78	330062	01.1834	14.99	330175	01.1250	14.28	330270	01.9667	30.33	340024	01.2260	15.05
320032	01.0053	16.66	330064	01.3837	28.38	330177	01.0204	12.46	330273	01.2909	21.36	340025	01.1908	14.15
320033	01.1561	19.23	330065	01.1753	17.14	330179	00.8644	14.09	330275	01.2168	18.19	340027	01.2025	15.46
320035	01.0000	14.82	330066	01.2326	17.26	330180	01.1942	16.09	330276	01.1889	16.58	340028	01.5288	17.48
320037	01.2063	15.17	330067	01.3792	19.68	330181	01.3113	28.32	330277	01.1317	16.35	340030	02.0064	19.06
320038	01.1613	15.62	330072	01.3367	26.92	330182	02.5604	26.92	330279	01.2905	17.24	340031	00.9382	12.56
320046	01.1938	18.23	330073	01.1865	14.20	330183	01.4402	18.88	330285	01.8179	21.81	340032	01.3951	17.87
320048	01.3453	13.90	330074	01.1952	16.89	330184	01.3357	25.83	330286	01.3134	22.59	340035	01.1716	14.97
320056	00.9819	.....	330075	01.0925	16.48	330185	01.2303	24.23	330290	01.7595	28.28	340036	01.1656	17.04
320057	01.0612	.....	330078	01.4429	16.90	330186	00.9205	18.79	330293	01.1658	13.72	340037	01.1731	15.50
320058	00.9103	.....	330079	01.3056	16.60	330188	01.1826	17.75	330304	01.2716	25.62	340038	01.1099	14.52
320059	00.9799	.....	330080	01.4028	24.95	330189	01.3836	16.20	330306	01.4564	26.59	340039	01.2731	19.18
320060	00.9135	.....	330082	01.1164	16.29	330191	01.2642	17.14	330307	01.2198	18.33	340040	01.7730	17.75
320061	01.0790	.....	330084	00.9954	15.59	330193	01.2990	27.34	330308	01.1771	28.68	340041	01.2428	15.99
320062	00.9353	.....	330085	01.3139	18.66	330194	01.8175	26.07	330309	01.2301	24.67	340042	01.1875	13.80
320063	01.3344	15.84	330086	01.2522	24.13	330195	01.6251	29.02	330314	01.3625	21.07	340044	01.1061	13.26
320065	01.2800	16.76	330088	01.1053	24.41	330196	01.3279	25.53	330315	01.2528	24.58	340045	01.0396	10.95
320067	00.8183	09.19	330090	01.5574	16.86	330197	01.0999	14.43	330316	01.3007	26.23	340047	01.8881	17.90
320068	00.9221	17.98	330091	01.3825	17.64	330198	01.3312	22.17	330327	00.9294	15.30	340048	00.9055	09.39
320069	01.0367	09.08	330092	01.1062	13.64	330199	01.4730	24.90	330331	01.2281	27.78	340049	00.6394	15.10
320070	01.0220	.....	330094	01.2285	15.57	330201	01.5327	27.38	330332	01.2569	24.30	340050	01.1927	14.69
320074	01.1134	17.15	330095	01.2586	16.43	330202	01.4667	25.07	330333	01.3666	22.00	340051	01.2724	16.23
320079	01.1977	17.41	330096	01.0690	14.47	330203	01.4028	19.16	330336	01.3373	27.39	340052	01.0387	18.62
330001	01.1965	24.84	330097	01.1645	14.51	330204	01.4276	24.90	330338	01.1337	22.52	340053	01.6979	18.94
330002	01.4946	24.26	330100	00.6809	25.95	330205	01.1548	19.46	330339	00.8047	18.09	340054	01.0903	12.68
330003	01.3431	19.29	330101	01.7909	33.09	330208	01.2046	23.16	330340	01.2007	23.91	340055	01.2066	16.69
330004	01.2765	19.10	330102	01.2998	16.32	330209	01.1899	21.17	330350	01.8078	27.96	340060	01.1317	16.38
330005	01.8086	19.53	330103	01.2457	15.94	330211	01.2056	16.31	330353	01.3988	27.49	340061	01.7130	19.20
330006	01.3140	24.11	330104	01.3533	25.44	330212	01.1780	20.25	330354	01.3850	.....	340063	01.0618	13.01
330007	01.3275	17.39	330106	01.5693	33.04	330213	01.1258	16.19	330357	01.3770	32.07	340064	01.2274	16.89
330008	01.1201	15.74	330107	01.2581	24.38	330214	01.7374	28.82	330359	00.9481	23.70	340065	01.3093	12.82
330009	01.3524	28.08	330108	01.2108	15.85	330215	01.2093	15.65	330372	01.2689	22.53	340067	01.1980	12.84
330010	01.1699	15.34	330111	01.0835	14.62	330218	01.1561	17.16	330381	01.1775	26.80	340068	01.2347	14.09
330011	01.2484	17.22	330114	00.8917	15.48	330219	01.6451	18.39	330385	01.1714	29.27	340069	01.7147	18.31
330012	01.6092	27.82	330115	01.2026	14.46	330221	01.3287	26.57	330386	01.1388	20.82	340070	01.3855	16.89
330013	02.0610	16.84	330116	00.9205	13.82	330222	01.2641	15.28	330387	00.8466	23.28	340071	01.0722	14.30
330014	01.3839	27.12	330118	01.6256	18.16	330223	01.0773	15.10	330389	01.8147	29.95	340072	01.1441	13.86
330016	01.0259	14.55	330119	01.7361	29.88	330224	01.2693	18.85	330390	01.2508	28.38	340073	01.4620	20.47
330019	01.1269	23.60	330121	01.0046	14.35	330225	01.1710	23.34	330393	01.7066	25.24	340075	01.1488	15.98
330020	01.0498	14.20	330122	01.2006	20.92	330226	01.2690	16.53	330394	01.5060	17.27	340080	01.1232	13.55
330023	01.2458	22.76	330125	01.8084	19.69	330229	01.3174	14.90	330395	01.3465	30.16	340084	01.0577	14.51
330024	01.9139	30.03	330126	01.2271	20.35	330230	01.5132	26.44	330396	01.2729	26.86	340085	01.2634	15.46
330025	01.1935	13.80	330127	01.3930	25.99	330231	01.1306	27.57	330397	01.2901	23.98	340087	01.1402	16.80
330027	01.4632	28.56	330128	01.3068	25.26	330232	01.2194	15.46	330398	01.2229	26.59	340088	01.1242	16.32

PAGE 11 OF 16

Provider	Case mix index	Avg. hour wage	Provider	Case mix index	Avg. hour wage	Provider	Case mix index	Avg. hour wage	Provider	Case mix index	Avg. hour wage	Provider	Case mix index	Avg. hour wage
340089	00.9624	12.28	350011	01.9150	17.37	360036	01.3220	17.27	360113	01.3029	18.24	360204	01.2911	16.96
340090	01.1324	15.49	350012	01.1423	12.36	360037	02.1403	20.14	360114	01.1471	16.05	360210	01.2281	19.23
340091	01.6487	18.32	350013	01.0828	14.58	360038	01.5899	17.85	360115	01.3208	18.08	360211	01.2341	17.25
340093	01.0683	11.60	350014	01.0438	14.29	360039	01.2504	15.38	360116	01.1336	16.04	360212	01.3982	20.25
340094	01.3312	16.83	350015	01.7039	14.44	360040	01.3208	17.72	360118	01.3257	17.37	360213	01.1677	15.77
340096	01.2015	17.18	350016	01.0482	10.35	360041	01.3759	18.25	360121	01.2853	16.74	360218	01.2994	16.21
340097	01.1584	16.04	350017	01.4595	14.52	360042	01.1088	16.74	360122	01.3802	17.77	360230	01.3282	20.27
340098	01.6790	19.05	350018	01.1672	10.67	360044	01.1425	15.79	360123	01.2539	17.50	360231	01.1364	12.45
340099	01.0973	13.36	350019	01.6119	18.69	360045	01.4898	19.25	360124	01.2571	17.08	360234	01.3614	17.90
340101	01.0284	11.11	350020	01.4933	17.82	360046	01.1375	18.60	360125	01.1173	16.87	360236	01.1885	18.56
340104	00.9509	10.60	350021	01.0719	10.94	360047	01.2246	13.85	360126	01.2013	18.97	360239	01.2445	18.70
340105	01.3875	17.75	350023	00.8794	15.59	360048	01.7427	21.00	360127	01.1556	16.28	360241	00.5303	17.69
340106	01.1119	17.79	350024	01.1055	13.69	360049	01.2627	17.36	360128	01.1296	13.85	360242	01.6927	.....
340107	01.3175	16.17	350025	01.0584	12.60	360050	01.1772	12.43	360129	01.0407	14.06	360243	00.7499	14.35
340109	01.3284	15.91	350027	00.9693	12.57	360051	01.5377	21.83	360130	01.1314	15.16	360244	00.7183	16.77
340111	01.1696	13.78	350029	01.0052	12.34	360052	01.7099	17.88	360131	01.4113	16.27	360245	00.8026	12.10
340112	01.2281	14.03	350030	01.0850	16.04	360054	01.2577	15.55	360132	01.2353	20.78	360246	00.8761	15.05
340113	01.9956	19.50	350033	00.9626	13.23	360055	01.2369	18.92	360133	01.4730	17.61	360247	00.4357	.....
340114	01.5144	19.16	350034	01.0422	13.58	360056	01.3471	16.92	360134	01.5906	18.25	370001	01.6940	18.41
340115	01.5599	17.23	350035	00.9058	10.11	360057	01.0323	13.04	360135	01.1609	17.12	370002	01.2409	13.60
340116	01.9326	20.30	350038	01.0433	13.26	360058	01.2713	15.35	360136	01.0537	14.73	370004	01.2787	15.30
340119	01.2864	15.21	350039	00.9735	13.53	360059	01.5326	20.00	360137	01.5595	18.98	370005	01.0310	14.12
340120	01.1407	12.33	350041	01.0473	13.05	360062	01.4664	18.40	360140	01.0061	15.47	370006	01.3098	14.88
340121	01.0454	14.52	350042	01.0545	12.39	360063	01.1442	17.19	360141	01.4435	19.84	370007	01.1454	12.80
340122	00.9955	10.30	350043	01.6433	16.58	360064	01.5484	19.65	360142	01.0217	14.99	370008	01.4101	16.02
340123	01.1301	14.07	350044	00.9167	10.01	360065	01.2285	16.97	360143	01.2936	17.74	370011	01.0535	12.51
340124	01.0290	12.27	350047	01.2270	16.64	360066	01.3888	17.16	360144	01.3153	20.19	370012	00.8431	09.22
340125	01.4128	16.94	350049	01.2236	10.38	360067	01.2739	12.11	360145	01.6266	16.84	370013	01.7649	18.61
340126	01.4341	16.23	350050	00.9361	10.25	360068	01.6561	21.91	360147	01.2668	15.55	370014	01.3220	17.14
340127	01.3124	16.30	350051	00.9479	14.13	360069	01.1403	16.38	360148	01.0725	16.50	370015	01.2733	13.84
340129	01.3428	18.65	350053	01.0745	09.47	360070	01.6756	16.57	360149	01.1481	20.33	370016	01.3805	14.25
340130	01.3270	16.03	350055	00.9216	11.50	360071	01.2663	15.42	360150	01.2805	17.70	370017	01.1032	12.14
340131	01.4309	15.77	350056	00.9559	12.92	360072	01.1415	16.29	360151	01.3134	16.55	370018	01.2603	14.06
340132	01.3108	12.41	350058	00.9358	12.18	360074	01.3554	19.15	360152	01.4800	17.65	370019	01.3065	11.91
340133	01.0442	13.87	350060	00.7458	07.59	360075	01.4959	20.80	360153	01.1489	13.64	370020	01.2921	12.53
340136	00.7885	24.45	350061	01.0638	13.77	360076	01.3053	18.84	360154	01.0301	12.39	370021	00.9804	10.01
340137	01.2184	12.68	350063	00.8926	.....	360077	01.4743	18.59	360155	01.3265	18.75	370022	01.2770	15.09
340138	01.1777	17.60	350064	00.9587	.....	360078	01.2792	18.97	360156	01.3473	16.47	370023	01.3268	14.95
340141	01.6350	18.27	350066	00.7912	.....	360079	01.7583	19.31	360159	01.1944	18.50	370025	01.3983	15.37
340142	01.2013	14.94	360001	01.3143	17.88	360080	01.1127	14.39	360161	01.2723	18.78	370026	01.4214	16.08
340143	01.3902	18.50	360002	01.1965	15.17	360081	01.3567	17.92	360162	01.2555	17.27	370028	01.8667	17.67
340144	01.4374	14.85	360003	01.7521	19.64	360082	01.3134	19.81	360163	01.8595	19.87	370029	01.2233	12.79
340145	01.3310	16.80	360006	01.7493	19.53	360083	01.2570	15.49	360164	00.8555	13.98	370030	01.2426	12.05
340146	01.0146	15.42	360007	01.0552	15.41	360084	01.6203	18.16	360165	01.2257	14.31	370032	01.5278	14.28
340147	01.2935	17.80	360008	01.2985	16.20	360085	01.8174	19.63	360166	01.1556	15.83	370033	01.0835	11.23
340148	01.4339	18.28	360009	01.3946	17.35	360086	01.4601	16.75	360169	00.9799	16.99	370034	01.2667	12.80
340151	01.1224	14.05	360010	01.2275	15.38	360087	01.4074	17.32	360170	01.2837	16.07	370035	01.6190	15.21
340153	01.9701	21.08	360011	01.2285	17.83	360088	01.2127	15.48	360172	01.3763	16.62	370036	01.0290	.....
340155	01.3926	20.91	360012	01.3020	17.61	360089	01.1680	16.92	360174	01.2365	19.24	370037	01.7236	17.83
340156	00.8066	.....	360013	01.0836	16.71	360090	01.2316	17.90	360175	01.2401	17.61	370038	00.9187	12.01
340158	01.1738	16.16	360014	01.1219	17.57	360091	01.2648	18.90	360176	01.1559	15.53	370039	01.4573	17.22
340159	01.1571	16.88	360016	01.6012	17.81	360092	01.2659	17.85	360177	01.2581	16.30	370040	01.1051	10.89
340160	01.0774	12.88	360017	01.7592	19.82	360093	01.2188	16.66	360178	01.2276	15.58	370041	01.0285	13.52
340162	01.2237	17.29	360018	01.5445	18.51	360094	01.2950	20.27	360179	01.2916	19.01	370042	00.8575	10.56
340164	01.4566	18.15	360019	01.2857	18.22	360095	01.3340	16.68	360180	02.0922	22.07	370043	00.9719	12.91
340166	01.4166	18.51	360020	01.4313	20.05	360096	01.1097	16.20	360184	00.4913	17.11	370045	01.0983	10.20
340168	00.5085	14.78	360021	01.2770	18.04	360098	01.4006	18.00	360185	01.2493	17.09	370046	00.9827	09.22
340171	01.1229	.....	360024	01.4310	17.76	360099	01.1130	16.91	360186	01.1727	15.04	370047	01.3245	15.40
350001	01.0099	11.13	360025	01.2355	17.66	360100	01.3239	15.63	360187	01.2787	16.00	370048	01.1876	13.46
350002	01.7678	16.04	360026	01.1897	15.59	360101	01.7334	19.71	360188	00.9998	14.77	370049	01.3566	15.60
350003	01.1971	15.67	360027	01.5255	19.06	360102	01.2713	19.68	360189	01.0092	15.40	370051	00.9627	13.31
350004	01.9429	17.88	360028	01.4563	15.28	360103	01.3290	18.70	360192	01.2404	19.28	370054	01.3878	14.79
350005	01.0670	13.14	360029	01.1611	16.41	360104	01.8950	20.28	360193	01.3104	16.77	370056	01.5609	15.41
350006	01.3958	16.16	360030	01.1326	14.82	360106	01.0509	13.89	360194	01.1180	16.14	370057	01.1711	15.05
350007	00.9510	12.20	360031	01.3534	18.42	360107	01.2373	16.98	360195	01.1319	17.72	370059	01.1178	13.53
350008	01.0408	15.15	360032	01.0876	16.18	360108	01.0371	15.08	360197	01.2030	16.76	370060	01.0787	12.88
350009	01.1648	15.74	360034	01.1698	13.30	360109	01.0970	17.43	360200	00.9989	13.48	370063	01.0947	13.12
350010	01.1768	12.30	360035	01.5734	19.90	360112	01.7594	21.61	360203	01.1502	15.55	370064	01.0006	10.14

PAGE 12 OF 16

Provider	Case mix index	Avg. hour wage	Provider	Case mix index	Avg. hour wage	Provider	Case mix index	Avg. hour wage	Provider	Case mix index	Avg. hour wage	Provider	Case mix index	Avg. hour wage
370065	01.0475	14.76	370195	00.9505	.....	390004	01.3767	16.70	390080	01.2555	18.66	390167	01.2691	20.71
370071	01.0381	10.18	380001	01.3213	19.27	390005	01.0865	14.82	390081	01.3510	20.23	390168	01.1971	17.49
370072	00.9034	11.67	380002	01.2104	22.74	390006	01.7405	17.39	390083	01.2377	20.87	390169	01.2059	18.63
370076	01.3228	12.42	380003	01.1411	18.75	390007	01.1827	21.33	390084	01.2406	15.29	390170	01.8512	22.43
370077	01.2244	16.30	380004	01.6835	22.89	390008	01.1329	15.08	390086	01.1338	16.87	390173	01.1970	17.08
370078	01.7096	14.58	380005	01.1844	19.47	390009	01.6076	17.97	390088	01.3128	18.42	390174	01.7084	24.17
370079	00.9596	11.98	380006	01.3941	18.29	390010	01.1788	16.58	390090	01.7984	19.42	390176	01.1554	16.79
370080	00.9895	11.12	380007	01.5747	22.66	390011	01.2486	16.49	390091	01.1719	17.09	390178	01.2863	17.63
370082	00.9026	12.48	380008	01.0694	18.69	390012	01.1879	19.15	390093	01.1483	15.20	390179	01.2723	22.80
370083	00.9519	10.95	380009	01.8168	22.17	390013	01.2292	16.77	390095	01.1706	13.95	390180	01.5471	22.83
370084	01.0346	08.88	380010	01.0963	24.15	390014	01.6409	16.42	390096	01.2685	16.88	390181	01.0604	17.80
370085	00.8099	12.94	380011	01.0945	14.95	390015	01.1953	13.06	390097	01.3276	20.91	390183	01.1832	17.16
370086	01.1956	09.89	380013	01.2681	21.54	390016	01.2237	15.58	390098	01.7625	20.06	390184	01.1052	17.69
370089	01.2826	14.01	380014	01.4140	18.89	390017	01.1682	14.20	390100	01.6300	19.30	390185	01.2228	16.12
370091	01.6822	16.13	380017	01.7069	21.77	390018	01.2273	19.41	390101	01.1992	15.70	390189	01.0395	17.78
370092	01.0705	12.73	380018	01.8382	19.21	390019	01.1151	14.53	390102	01.3664	20.34	390191	01.0524	13.91
370093	01.8611	18.67	380019	01.2076	18.88	390022	01.3923	21.81	390103	01.0990	17.17	390192	01.1238	17.15
370094	01.4135	16.67	380020	01.4350	20.06	390023	01.2514	19.71	390104	01.0557	15.15	390193	01.1950	15.39
370095	00.9154	11.62	380021	01.2873	19.10	390024	00.8646	22.54	390106	01.0122	14.85	390194	01.1560	18.97
370097	01.3691	18.65	380022	01.1702	19.92	390025	00.6443	16.64	390107	01.2482	18.52	390195	01.8265	22.08
370099	01.1663	13.22	380023	01.2350	17.76	390026	01.2687	20.58	390108	01.4077	19.97	390196	01.4066	.....
370100	01.0423	13.02	380025	01.2670	21.81	390027	01.9708	23.48	390109	01.1523	14.44	390197	01.3091	18.40
370103	00.9024	11.77	380026	01.1899	16.87	390028	01.7871	18.54	390110	01.6465	17.36	390198	01.1942	15.21
370105	02.0043	17.06	380027	01.2587	20.25	390029	01.9395	18.73	390111	01.8583	26.22	390199	01.2016	14.89
370106	01.5411	16.96	380029	01.1474	17.29	390030	01.2365	16.29	390112	01.1488	12.16	390200	01.0147	14.67
370108	01.0551	10.82	380031	01.0329	15.92	390031	01.1587	16.93	390113	01.2113	16.04	390201	01.2666	18.75
370112	01.0769	12.33	380033	01.7783	22.97	390032	01.2498	17.80	390114	01.1217	21.07	390203	01.3102	20.45
370113	01.1674	12.33	380035	01.3580	18.58	390035	01.2774	17.24	390115	01.3154	21.40	390204	01.2596	20.05
370114	01.6305	14.69	380036	01.1305	17.27	390036	01.3337	17.63	390116	01.2237	19.91	390205	01.3479	22.42
370121	01.1729	15.78	380037	01.2063	18.24	390037	01.3426	18.07	390117	01.1636	15.65	390206	01.3349	19.91
370122	01.1291	09.78	380038	01.3425	21.15	390039	01.0948	15.60	390118	01.1524	16.29	390209	01.0438	15.48
370123	01.2098	14.12	380039	01.3082	18.89	390040	01.0024	12.71	390119	01.3475	17.17	390211	01.1929	16.47
370125	01.0284	11.90	380040	01.2507	19.23	390041	01.2475	16.82	390121	01.3363	18.95	390213	00.9476	14.55
370126	00.9483	10.66	380042	01.1550	18.06	390042	01.4374	20.74	390122	01.0719	16.06	390215	01.1565	20.69
370131	01.0232	12.93	380047	01.6960	19.84	390043	01.0988	15.65	390123	01.3041	20.58	390217	01.2781	17.92
370133	01.1213	09.82	380048	01.0936	13.92	390044	01.5993	18.80	390125	01.2255	15.08	390219	01.3149	18.57
370138	01.1138	14.40	380050	01.3349	16.37	390045	01.7321	17.35	390126	01.3266	20.07	390220	01.2126	19.33
370139	01.0944	10.62	380051	01.5217	19.13	390046	01.5446	18.49	390127	01.2319	20.26	390222	01.3083	20.42
370140	01.0059	11.71	380052	01.1764	16.70	390047	01.6845	18.24	390128	01.2014	17.96	390223	01.6376	23.15
370141	01.3883	19.17	380055	01.2275	23.88	390048	01.1857	16.26	390130	01.1480	16.62	390224	00.9314	13.04
370146	01.0486	12.03	380056	01.0753	15.78	390049	01.5514	19.82	390131	01.2704	16.06	390225	01.2124	15.42
370148	01.6050	19.01	380060	01.5375	21.51	390050	02.1389	21.60	390132	01.2425	20.25	390226	01.7861	23.22
370149	01.2373	15.19	380061	01.5190	22.00	390051	02.1828	24.98	390133	01.7790	20.57	390228	01.2071	18.67
370153	01.0915	13.17	380062	01.1039	15.07	390052	01.1846	16.68	390135	01.2913	19.73	390231	01.3122	21.89
370154	01.0164	12.31	380063	01.3354	21.48	390054	01.2245	14.56	390136	01.2338	15.66	390233	01.3268	16.71
370156	01.1022	13.37	380064	01.4398	18.47	390055	01.7751	21.82	390137	01.2962	17.80	390235	01.5635	23.94
370158	01.0538	12.08	380065	01.0680	19.24	390056	01.1222	15.73	390138	01.3365	17.41	390236	01.1643	15.90
370159	01.3427	13.95	380066	01.3162	17.60	390057	01.3263	18.94	390139	01.4984	23.50	390237	01.6149	20.17
370163	00.8558	10.99	380068	01.0655	19.31	390058	01.3239	17.46	390142	01.6716	22.64	390238	01.3009	16.12
370165	01.0872	11.74	380069	01.1328	17.51	390060	01.1432	16.68	390145	01.3596	18.64	390242	01.2772	18.69
370166	01.0886	15.48	380070	01.3924	21.21	390061	01.4426	20.47	390146	01.3088	16.19	390244	00.9339	13.32
370169	01.1024	10.66	380071	01.2894	18.06	390062	01.1400	15.76	390147	01.2505	19.22	390245	01.3465	23.15
370170	00.9792	.....	380072	00.9714	14.15	390063	01.7324	19.20	390149	01.2579	19.59	390246	01.2349	15.91
370171	01.0341	.....	380075	01.4281	20.90	390064	01.5561	16.25	390150	01.1065	17.50	390247	01.0497	17.22
370172	00.8587	.....	380078	01.1638	16.95	390065	01.2903	18.85	390151	01.2927	18.26	390249	01.0291	10.81
370173	01.2420	.....	380081	01.1568	17.66	390066	01.2933	17.15	390152	01.0351	17.07	390256	01.7792	23.51
370174	00.9656	.....	380082	01.2906	20.35	390067	01.8083	18.03	390153	01.2473	21.93	390258	01.2502	19.78
370176	01.1495	16.48	380083	01.2487	18.93	390068	01.3245	18.13	390154	01.1877	13.93	390260	01.1823	15.95
370177	00.9686	10.10	380084	01.2127	20.61	390069	01.3242	19.23	390155	01.2985	20.06	390262	01.9798	17.25
370178	01.0015	12.17	380087	01.0083	12.30	390070	01.2898	19.49	390156	01.4337	22.61	390263	01.4331	18.66
370179	00.8966	14.28	380088	01.0059	15.71	390071	01.1154	13.36	390157	01.3427	17.97	390265	01.3123	17.72
370180	01.0716	.....	380089	01.2909	21.87	390072	01.1133	15.76	390158	01.5891	.....	390266	01.2098	16.69
370183	01.0864	14.00	380090	01.3011	24.41	390073	01.6002	18.94	390160	01.2031	17.67	390267	01.2930	18.93
370186	01.0206	12.72	380091	01.2113	23.79	390074	01.2369	16.26	390161	01.0981	14.87	390268	01.3884	19.94
370189	00.9754	10.13	380897	04.9268	.....	390075	01.2410	15.92	390162	01.4238	19.03	390270	01.3090	15.89
370190	01.5480	17.49	390001	01.3578	18.16	390076	01.3094	20.45	390163	01.2248	16.55	390272	00.4549	.....
370192	01.1656	.....	390002	01.3668	17.03	390078	01.0633	15.98	390164	01.9412	19.14	390277	00.5643	20.34
370194	01.1343	.....	390003	01.2571	15.57	390079	01.7083	16.83	390166	01.1041	17.40	390278	00.7673	17.52

PAGE 13 OF 16

Provider	Case mix index	Avg. hour wage	Provider	Case mix index	Avg. hour wage	Provider	Case mix index	Avg. hour wage	Provider	Case mix index	Avg. hour wage	Provider	Case mix index	Avg. hour wage
390279	01.0726	09.45	420005	01.2017	14.35	430013	01.2330	15.06	440029	01.2864	16.30	440148	01.1406	14.37
390281	03.1739	.....	420006	01.2785	18.90	430014	01.2742	16.77	440030	01.1989	13.21	440149	01.1993	15.19
400001	01.2170	08.68	420007	01.5103	16.31	430015	01.1801	14.41	440031	00.9653	12.29	440150	01.2853	19.58
400002	01.4586	10.39	420009	01.2131	15.70	430016	01.8185	17.59	440032	01.0553	12.65	440151	01.3706	15.86
400003	01.2378	07.14	420010	01.1070	14.35	430018	00.9882	14.06	440033	01.0675	14.84	440152	01.5616	16.91
400004	01.1516	07.34	420011	01.0905	14.89	430022	00.9656	10.91	440034	01.5798	16.64	440153	01.2607	15.10
400005	01.1122	06.10	420014	01.1343	14.11	430023	00.9173	09.95	440035	01.3176	15.65	440156	01.5650	18.85
400006	01.2005	08.16	420015	01.3145	15.96	430024	00.9117	12.28	440039	01.6355	16.76	440157	01.0913	13.64
400007	01.2599	07.55	420016	01.0635	14.39	430026	01.0798	11.36	440040	00.9697	17.03	440159	01.2358	14.83
400009	01.0253	07.68	420018	01.7204	18.94	430027	01.8117	16.54	440041	01.0374	12.35	440161	01.6916	20.58
400010	00.9067	07.94	420019	01.2221	14.90	430028	01.0938	13.68	440046	01.3271	13.59	440166	01.4407	17.80
400011	00.9999	08.65	420020	01.3908	15.98	430029	00.9886	13.10	440047	00.9568	15.31	440168	01.0199	13.03
400012	01.2156	07.09	420023	01.4241	18.07	430031	00.9673	11.31	440048	01.7988	16.64	440173	01.5155	16.91
400013	01.2969	08.96	420026	01.9266	18.05	430033	01.0218	11.90	440049	01.6566	15.62	440174	00.9837	13.30
400014	01.3613	07.51	420027	01.3790	15.50	430034	01.0752	11.58	440050	01.2035	15.14	440175	01.2366	18.06
400015	01.2211	10.88	420030	01.2885	15.83	430036	01.0398	10.11	440051	00.9285	13.29	440176	01.2916	18.36
400016	01.3614	10.48	420031	00.9586	12.15	430037	00.9784	12.89	440052	01.2226	14.15	440178	01.1880	20.20
400017	01.2405	06.27	420033	01.2216	19.24	430038	01.0179	10.77	440053	01.3071	15.64	440180	01.1517	16.68
400018	01.3516	09.35	420035	00.7985	12.43	430039	01.0871	11.53	440054	01.2182	13.84	440181	01.0190	11.75
400019	01.6737	09.48	420036	01.2011	15.38	430040	00.9098	12.17	440056	01.0857	13.45	440182	00.9568	15.33
400021	01.4421	07.62	420037	01.2778	19.65	430041	00.9376	11.91	440057	01.0155	10.77	440183	01.5296	15.06
400022	01.3098	09.79	420038	01.2852	14.43	430042	00.9807	10.63	440058	01.3158	14.95	440184	01.3494	18.63
400024	01.0265	08.62	420039	01.1511	14.52	430043	01.1938	11.97	440059	01.3336	15.98	440185	01.1231	14.24
400026	00.9430	05.90	420042	01.2035	12.15	430044	00.9249	13.17	440060	01.1799	14.76	440186	01.1885	16.21
400027	01.1317	08.32	420043	01.1800	18.82	430047	01.1381	12.24	440061	01.2121	15.46	440187	01.1952	14.85
400028	01.0328	07.14	420048	01.1376	14.26	430048	01.2063	15.01	440063	01.6136	17.43	440189	01.4819	18.81
400029	01.1287	06.64	420049	01.1769	14.55	430049	00.9360	12.66	440064	01.1860	15.05	440192	01.1489	13.99
400031	01.1446	08.00	420051	01.5568	17.99	430051	01.0355	13.48	440065	01.2301	16.18	440193	01.2852	17.88
400032	01.1257	07.75	420053	01.1378	14.03	430054	01.0034	13.13	440067	01.1879	15.54	440194	01.4249	16.89
400044	01.2430	09.09	420054	01.3709	16.39	430056	00.8479	08.93	440068	01.2130	16.43	440196	00.9475	13.32
400048	01.1320	07.91	420055	01.0623	12.51	430057	00.9205	10.47	440069	01.1874	14.17	440197	01.4007	19.15
400061	01.7050	13.68	420056	01.1625	13.41	430060	01.1594	08.46	440070	01.1257	12.52	440200	01.1917	15.41
400079	01.2488	08.95	420057	01.1395	14.96	430062	00.8739	10.31	440071	01.3946	14.87	440203	00.9346	13.17
400087	01.3761	08.90	420059	00.9844	13.96	430064	01.1205	11.89	440072	01.5118	13.92	440205	01.0962	15.86
400094	01.0405	07.41	420061	01.1517	16.16	430065	00.9527	09.93	440073	01.3464	16.95	440206	01.0340	13.82
400098	01.2435	07.17	420062	01.4444	15.65	430066	00.9685	10.93	440078	01.0260	13.28	440208	02.0269	.....
400102	01.1413	08.65	420064	01.1161	13.45	430073	01.0814	.....	440081	01.1575	15.31	450002	01.4623	19.35
400103	01.3671	08.80	420065	01.3051	16.72	430076	00.9768	09.41	440082	01.9905	20.54	450004	01.1684	12.38
400104	01.3703	08.97	420066	00.9099	14.40	430077	01.5832	16.53	440083	01.1099	10.96	450005	01.1503	13.79
400105	01.1725	08.37	420067	01.2333	16.24	430079	00.9628	11.47	440084	01.1544	11.41	450007	01.2442	13.73
400106	01.2084	08.12	420068	01.2885	16.08	430080	01.1317	08.89	440087	00.9572	14.44	450008	01.3624	14.96
400109	01.5298	09.13	420069	01.1002	13.71	430081	01.0452	.....	440090	00.9308	13.29	450010	01.3415	15.37
400110	01.1119	07.87	420070	01.2639	15.05	430082	00.8001	.....	440091	01.5472	16.53	450011	01.5000	17.43
400111	01.1553	07.98	420071	01.3110	16.13	430083	00.8672	.....	440100	01.0273	12.82	450014	01.0699	13.84
400112	01.2298	09.26	420072	01.0735	10.64	430084	00.9280	.....	440102	01.0695	12.26	450015	01.5543	14.96
400113	01.2400	07.57	420073	01.3095	18.10	430085	00.8385	.....	440103	01.2284	17.24	450016	01.6256	17.57
400114	01.0377	06.50	420074	00.8992	11.72	430087	00.9105	09.29	440104	01.6509	17.68	450018	01.6091	21.75
400115	01.0054	07.56	420075	00.9719	12.66	440001	01.1227	12.18	440105	01.3723	16.69	450020	01.0171	15.47
400117	01.1773	09.23	420078	01.8088	18.59	440002	01.5965	15.80	440109	01.1308	12.28	450021	01.8117	21.11
400118	01.1900	08.14	420079	01.5669	16.94	440003	01.0714	15.23	440110	00.9687	16.06	450023	01.4846	15.80
400120	01.3084	09.14	420080	01.2589	19.18	440006	01.6500	17.60	440111	01.3613	18.00	450024	01.3672	16.45
400121	01.0121	06.51	420082	01.3946	19.13	440007	01.0148	11.83	440114	01.0474	12.68	450025	01.5058	16.27
400122	01.0009	05.88	420083	01.2042	18.36	440008	00.9878	13.50	440115	01.1172	14.66	450028	01.6335	17.17
400123	01.1728	08.05	420084	00.7413	13.56	440009	01.1753	13.22	440120	01.5385	16.14	450029	01.3991	12.98
400124	02.6604	09.27	420085	01.3970	16.86	440010	00.9235	08.75	440125	01.4408	16.09	450031	01.5830	18.72
410001	01.3246	23.02	420086	01.3613	16.90	440011	01.2901	16.28	440130	01.1687	14.16	450032	01.2715	13.63
410004	01.3655	21.15	420087	01.5946	16.53	440012	01.4699	17.72	440131	01.1317	13.44	450033	01.6308	16.84
410005	01.3492	21.90	420088	01.1349	15.05	440014	01.0615	09.06	440132	01.1116	14.01	450034	01.6445	16.28
410006	01.2670	21.40	420089	01.2336	19.40	440015	01.6051	16.42	440133	01.5494	17.78	450035	01.4519	18.91
410007	01.6550	20.96	420091	01.2147	13.16	440016	01.0116	11.35	440135	01.3062	14.03	450037	01.6279	17.69
410008	01.1691	21.05	430004	01.0955	17.25	440017	01.6136	18.42	440137	00.9770	12.14	450039	01.3345	18.70
410009	01.2968	20.66	430005	01.3167	14.06	440018	01.4675	16.10	440141	01.0771	13.59	450040	01.5518	17.75
410010	01.0160	25.40	430007	01.0540	12.52	440019	01.6253	19.06	440142	01.0311	10.75	450042	01.6646	15.75
410011	01.2110	22.25	430008	01.1248	14.01	440020	01.2392	15.43	440143	01.1020	17.21	450043	01.4473	20.40
410012	01.7208	19.51	430009	01.0939	12.21	440022	01.2040	13.72	440144	01.3327	18.35	450044	01.6182	20.04
410013	01.3105	24.63	430010	01.1273	09.23	440023	00.9963	11.58	440145	01.0439	10.99	450046	01.3724	14.67
420002	01.3794	18.80	430011	01.3139	14.33	440024	01.3302	16.61	440146	01.0036	12.98	450047	01.1155	13.43
420004	01.8612	18.35	430012	01.3055	14.97	440025	01.1317	13.01	440147	01.1079	17.06	450050	01.0582	16.00

PAGE 14 OF 16

Provider	Case mix index	Avg. hour wage	Provider	Case mix index	Avg. hour wage	Provider	Case mix index	Avg. hour wage	Provider	Case mix index	Avg. hour wage	Provider	Case mix index	Avg. hour wage
450051	01.5923	18.22	450154	01.2004	12.23	450296	01.3139	16.46	450484	01.4849	18.53	450651	01.8166	21.92
450052	01.0171	13.13	450155	01.0191	12.61	450297	01.0190	12.01	450488	01.2528	14.98	450652	00.9114	13.44
450053	01.1479	13.11	450157	01.0041	12.97	450299	01.3455	16.28	450489	00.9859	11.56	450653	01.2485	17.98
450054	01.7181	21.32	450160	00.9838	17.50	450303	00.9458	09.97	450497	01.1299	12.05	450654	01.0034	11.11
450055	01.1238	12.92	450162	01.1851	16.63	450306	01.0878	12.50	450498	01.2653	13.88	450656	01.4908	16.48
450056	01.6174	18.26	450163	01.0364	15.34	450307	00.9041	13.62	450508	01.5582	16.37	450658	00.9746	14.01
450058	01.5774	14.76	450164	01.0684	12.56	450309	01.0677	12.74	450514	01.2163	18.78	450659	01.5762	22.12
450059	01.2421	13.21	450165	00.9569	14.34	450315	01.1137	19.65	450517	01.0029	10.94	450660	01.5698	21.85
450060	01.3622	22.17	450166	00.9672	10.06	450320	01.3364	18.20	450518	01.5325	16.84	450661	01.1378	18.94
450063	00.9758	11.51	450169	00.9171	13.82	450321	00.9661	12.45	450523	01.5243	21.18	450662	01.6712	16.53
450064	01.5083	15.34	450170	00.9792	11.32	450322	00.7151	15.40	450530	01.4505	21.64	450665	00.9334	11.45
450065	01.1393	14.75	450176	01.2241	15.23	450324	01.6484	15.19	450534	00.9542	20.29	450666	01.2708	19.05
450068	01.7951	20.31	450177	01.0967	13.18	450325	01.2279	11.93	450535	01.2557	14.12	450668	01.5484	18.90
450070	01.2671	15.46	450178	01.0123	14.64	450327	00.9734	12.11	450537	01.3698	17.80	450669	01.2923	19.10
450072	01.2351	18.19	450181	01.0065	15.15	450330	01.2256	16.86	450538	01.3931	21.17	450670	01.2960	19.44
450073	01.1202	12.84	450184	01.5429	17.74	450334	01.0568	11.65	450539	01.2925	13.27	450672	01.6578	18.91
450076	01.5802	.....	450185	01.1137	08.47	450337	01.2313	17.14	450544	01.4408	22.65	450673	01.1428	11.38
450078	00.9949	11.17	450187	01.2789	16.44	450340	01.3177	14.54	450545	01.2710	14.13	450674	01.0203	22.09
450079	01.4395	19.03	450188	01.0085	12.46	450341	01.0264	16.26	450546	01.8365	18.37	450675	01.5171	17.78
450080	01.2966	15.79	450190	01.1841	19.53	450346	01.3443	16.27	450547	01.1613	15.09	450677	01.4324	19.18
450081	01.1087	12.87	450191	01.0864	15.75	450347	01.1430	15.48	450550	00.9800	17.01	450678	01.4776	20.45
450082	00.9627	12.75	450192	01.2403	15.49	450348	00.9975	10.99	450551	01.1957	13.75	450681	03.0551	17.29
450083	01.7142	17.21	450193	01.8944	21.32	450351	01.1727	18.76	450558	01.7767	17.17	450683	01.3083	20.17
450085	01.0903	14.38	450194	01.2291	18.11	450352	01.1141	16.21	450559	00.9811	12.75	450684	01.2695	18.53
450087	01.4141	19.35	450196	01.5101	17.34	450353	01.3226	16.13	450561	01.6522	17.65	450686	01.5555	14.30
450090	01.2144	12.40	450197	01.0544	19.66	450355	01.1121	11.18	450563	01.2306	21.98	450688	01.2802	18.65
450092	01.2129	13.12	450200	01.3827	16.35	450358	02.0930	20.57	450565	01.2925	15.63	450690	01.4169	21.31
450094	01.2531	19.39	450201	01.0233	15.38	450362	01.1896	17.62	450570	01.0316	11.23	450691	01.1089	14.91
450096	01.5315	19.25	450203	01.1919	16.13	450369	01.0842	10.21	450571	01.4989	14.52	450694	01.2338	15.91
450097	01.4577	18.33	450209	01.5494	16.26	450370	01.1269	13.02	450573	01.0008	13.58	450696	01.6701	23.37
450098	01.1683	13.75	450210	01.1950	12.03	450371	01.1487	11.02	450574	00.9382	13.41	450697	01.5431	16.28
450099	01.2816	17.70	450211	01.3861	14.13	450372	01.2680	20.49	450575	01.0572	16.98	450698	00.9742	11.66
450101	01.4848	15.03	450213	01.5055	16.27	450373	01.1462	13.68	450578	00.9224	12.94	450700	00.9302	12.68
450102	01.7093	21.87	450214	01.3721	18.61	450374	00.9541	12.20	450580	01.1076	12.59	450702	01.6063	17.58
450104	01.2182	13.74	450217	01.0508	12.61	450376	01.5102	16.26	450583	01.0094	12.24	450703	01.5299	20.96
450107	01.6171	18.75	450219	01.1346	14.22	450378	01.0973	21.56	450584	01.2257	12.86	450704	01.3719	17.86
450108	00.9967	14.49	450221	01.0814	14.05	450379	01.5198	21.28	450586	00.9987	11.26	450705	01.0246	16.80
450109	00.9911	15.36	450222	01.6508	17.32	450381	01.0567	12.56	450587	01.2266	16.93	450706	01.2165	21.90
450110	01.2522	19.34	450224	01.3702	15.85	450388	01.7602	17.41	450591	01.1417	16.28	450709	01.2281	20.05
450111	01.2466	18.63	450229	01.5708	14.82	450389	01.2066	16.74	450596	01.3150	17.29	450711	01.6431	17.88
450112	01.3508	13.87	450231	01.5945	16.94	450393	01.3320	20.94	450597	01.0561	14.23	450712	00.7387	15.03
450113	01.2359	16.99	450234	00.9823	11.27	450395	01.0348	14.68	450603	00.8332	16.27	450713	01.4783	18.10
450118	01.5629	20.94	450235	01.0563	13.47	450399	00.9957	13.37	450604	01.3817	13.57	450715	01.4531	17.40
450119	01.2958	16.37	450236	01.0665	14.17	450400	01.1526	13.70	450605	01.4745	17.91	450716	01.2682	19.64
450121	01.4393	18.70	450237	01.5510	16.60	450403	01.3684	19.90	450609	00.8790	12.25	450717	01.3585	22.95
450123	01.1554	17.47	450239	01.1977	12.35	450411	00.9524	11.46	450610	01.4506	15.52	450718	01.2381	19.18
450124	01.5864	19.48	450241	01.0458	15.67	450417	01.0539	12.95	450614	01.0471	12.43	450723	01.3474	18.17
450126	01.3845	11.95	450243	00.8395	11.57	450418	01.3370	17.42	450615	01.0767	11.70	450724	01.2905	16.59
450128	01.2434	14.78	450246	00.9676	15.02	450419	01.2738	22.40	450617	01.2885	20.82	450725	00.9969	20.18
450130	01.5025	15.17	450249	00.9712	10.70	450422	00.8075	23.47	450620	01.0455	12.48	450726	00.8676	14.54
450131	01.3707	19.58	450250	00.9532	09.93	450423	01.4394	21.03	450623	01.1429	17.62	450727	00.9596	09.78
450132	01.6610	16.45	450253	01.3163	13.51	450424	01.2047	16.33	450626	01.0877	14.09	450728	00.9627	14.31
450133	01.5384	16.49	450258	01.0962	11.17	450429	01.1242	13.35	450628	00.9420	15.48	450730	01.3579	21.14
450135	01.7273	21.81	450259	01.2084	17.44	450431	01.6589	17.28	450630	01.6424	20.60	450733	01.3470	16.91
450137	01.5099	24.28	450264	00.8643	11.94	450438	01.1793	14.39	450631	01.7535	18.05	450735	00.8720	11.91
450140	00.8414	16.46	450269	01.1388	12.62	450446	00.8625	13.07	450632	01.0125	11.17	450742	01.3448	21.43
450142	01.4366	19.50	450270	01.1746	10.16	450447	01.3505	17.69	450633	01.5938	19.18	450743	01.4622	18.40
450143	01.0982	12.23	450271	01.2762	14.41	450450	01.0872	.....	450634	01.6943	21.57	450746	01.0500	13.39
450144	01.1175	16.23	450272	01.2923	16.29	450451	01.1254	20.23	450637	01.3647	18.24	450747	01.3619	16.51
450145	00.8692	12.46	450276	01.0996	10.44	450457	01.7832	17.14	450638	01.5844	22.52	450749	01.0128	12.35
450146	00.9881	16.53	450278	00.8495	18.12	450460	01.0299	12.06	450639	01.4141	21.41	450750	01.0228	11.86
450147	01.4175	17.66	450280	01.5286	20.58	450462	01.8354	17.99	450641	01.0224	12.60	450751	01.3246	21.80
450148	01.3079	19.02	450283	01.0519	12.09	450464	00.9825	13.41	450643	01.2796	17.60	450754	00.8884	13.19
450149	01.3501	19.33	450286	01.0373	14.54	450465	01.3178	14.66	450644	01.4715	20.30	450755	01.1540	13.66
450150	00.8919	13.62	450288	01.2105	12.58	450467	00.9653	14.39	450646	01.6143	19.59	450757	00.9784	13.32
450151	01.1057	13.27	450289	01.4907	17.37	450469	01.3736	16.94	450647	02.0240	19.98	450758	01.2423	.....
450152	01.2645	16.04	450292	01.2051	20.15	450473	01.0047	17.83	450648	01.0382	11.36	450760	01.2068	16.97
450153	01.5803	17.10	450293	00.9746	13.55	450475	01.1363	14.13	450649	01.0756	14.64	450761	01.0642	09.63

PAGE 15 OF 16

Provider	Case mix index	Avg. hour wage	Provider	Case mix index	Avg. hour wage	Provider	Case mix index	Avg. hour wage	Provider	Case mix index	Avg. hour wage	Provider	Case mix index	Avg. hour wage
450763	01.0163	15.68	460047	01.7740	19.49	490067	01.2062	14.95	500029	00.9339	14.30	500141	01.3258	21.93
450766	02.3234	14.24	460049	01.9207	17.05	490069	01.3990	15.10	500030	01.4753	22.13	500143	00.7662	14.92
450769	01.0378	13.28	460050	01.3106	20.35	490071	01.4398	17.56	500031	01.2905	20.19	500146	01.0318	.....
450770	00.9496	13.59	460051	01.1901	.....	490073	01.3538	21.49	500033	01.2047	18.05	510001	01.7139	17.08
450771	01.9690	17.01	470001	01.2043	17.11	490074	01.3343	16.00	500036	01.3185	19.11	510002	01.2708	16.31
450774	00.9708	23.99	470003	01.8136	17.82	490075	01.3332	16.62	500037	01.1216	17.63	510004	00.9183	12.62
450775	01.1940	19.26	470004	01.1118	14.18	490077	01.1636	16.87	500039	01.3772	21.32	510005	01.0028	13.71
450776	00.9251	.....	470005	01.2608	18.71	490079	01.3187	14.30	500041	01.2872	22.09	510006	01.2565	17.08
450777	01.0014	15.01	470006	01.1898	17.05	490083	00.6451	14.63	500042	01.3735	20.95	510007	01.4707	17.81
450779	01.3450	20.59	470008	01.2516	15.41	490084	01.2535	15.96	500043	01.2939	16.56	510008	01.1226	15.33
450780	01.6140	19.78	470010	01.1804	18.58	490085	01.2071	13.36	500044	01.8920	20.56	510012	01.0670	14.26
450781	01.4783	16.23	470011	01.1610	19.30	490088	01.2024	13.97	500045	01.1167	20.65	510013	01.1365	15.10
450785	01.0516	26.08	470012	01.2651	17.52	490089	01.0748	14.37	500048	00.9122	16.01	510015	00.9706	12.51
450788	01.4208	.....	470013	01.1682	18.28	490090	01.1783	14.25	500049	01.4708	19.34	510016	00.9917	11.27
450792	01.3306	.....	470015	01.0806	16.29	490091	01.2045	20.14	500050	01.4079	20.41	510018	01.1351	14.40
450793	01.6623	.....	470018	01.1930	17.37	490092	01.2038	14.32	500051	01.6292	22.71	510020	01.0494	10.16
450794	01.4602	.....	470020	00.9884	14.50	490093	01.2927	15.31	500052	01.2781	.....	510022	01.7998	19.52
450795	00.8520	.....	470023	01.2947	17.20	490094	01.0700	14.57	500053	01.2686	20.10	510023	01.1454	15.14
450797	00.6382	.....	470024	01.1136	17.08	490095	01.4745	16.13	500054	01.8788	20.41	510024	01.4093	17.94
450798	00.8871	.....	490001	01.0799	19.41	490097	01.1333	13.69	500055	01.0886	20.32	510026	00.9392	12.19
450799	01.3895	.....	490002	01.0625	13.61	490098	01.3132	11.69	500057	01.3490	16.24	510027	00.9669	13.86
450800	01.3919	.....	490003	00.6018	17.55	490099	00.9348	15.29	500058	01.5095	19.82	510028	01.0731	14.90
450801	01.4818	.....	490004	01.2303	16.67	490100	01.3757	16.69	500059	01.1588	20.02	510029	01.2953	16.69
450802	01.2487	.....	490005	01.5364	16.10	490101	01.1933	23.64	500060	01.4869	20.70	510030	01.0968	14.87
450803	00.8537	.....	490006	01.1569	13.27	490104	00.9110	14.46	500061	00.9842	17.95	510031	01.3367	16.27
450804	01.5293	.....	490007	02.0310	17.19	490105	00.7427	16.55	500062	01.0856	17.16	510033	01.2624	14.42
450805	01.1693	.....	490009	01.8204	18.08	490106	00.9047	14.86	500064	01.5371	21.69	510035	01.1467	16.46
450807	00.9104	.....	490010	01.0912	17.08	490107	01.3155	22.64	500065	01.3049	17.67	510036	01.0129	09.34
450809	01.6570	.....	490011	01.4170	17.03	490108	00.8737	13.78	500068	01.0186	17.17	510038	01.1610	13.71
450897	04.8548	.....	490012	01.1990	15.55	490109	00.9185	14.09	500069	01.1665	18.62	510039	01.3580	15.02
460001	01.7866	19.82	490013	01.2514	14.82	490110	01.3986	15.90	500071	01.3666	19.46	510043	00.9310	11.33
460003	01.7210	18.38	490014	01.3584	21.04	490111	01.2348	16.79	500072	01.1952	21.19	510046	01.2605	15.26
460004	01.7712	20.68	490015	01.4630	17.30	490112	01.7326	19.07	500073	01.0859	16.85	510047	01.2074	17.37
460005	01.5499	18.80	490017	01.3623	16.44	490113	01.3003	20.96	500074	01.1671	14.80	510048	01.0733	17.39
460006	01.4322	18.21	490018	01.2580	16.83	490114	01.0988	15.00	500075	03.7376	20.25	510050	01.4642	15.34
460007	01.5450	19.27	490019	01.2006	15.60	490115	01.2451	14.25	500077	01.3913	21.63	510053	01.0396	13.50
460008	01.3609	16.02	490020	01.1565	14.16	490116	01.2251	15.61	500079	01.4055	19.87	510055	01.2246	19.41
460009	01.8852	18.11	490021	01.1505	17.11	490117	01.1729	13.62	500080	00.8427	11.56	510058	01.2002	16.23
460010	01.9161	20.15	490022	01.4063	17.59	490118	01.7642	21.32	500084	01.1439	20.05	510059	01.2290	13.65
460011	01.3884	16.16	490023	01.2234	17.03	490119	01.3467	16.41	500085	01.0619	17.19	510060	01.1538	15.36
460013	01.5056	18.54	490024	01.7803	17.06	490120	01.3270	16.88	500086	01.4244	18.48	510061	01.0749	12.59
460014	01.0358	15.38	490027	01.1310	13.11	490122	01.5152	20.86	500088	01.3586	22.86	510062	01.1797	15.38
460015	01.2592	19.75	490028	01.3516	18.42	490123	01.1414	14.80	500089	00.9469	13.99	510063	01.0126	10.63
460016	00.8970	13.58	490030	01.1033	11.16	490124	01.1521	16.99	500090	01.1042	12.60	510065	01.0089	12.04
460017	01.4549	16.52	490031	01.1369	12.61	490126	01.3837	14.72	500092	01.0798	15.65	510066	01.1288	12.02
460018	00.9760	13.59	490032	01.7249	19.08	490127	01.0179	14.44	500094	00.9177	15.53	510067	01.2496	15.91
460019	01.1515	12.90	490033	01.1854	15.21	490130	01.3118	16.58	500096	01.0950	17.13	510068	01.1196	14.01
460020	01.0589	14.21	490035	01.2179	09.64	490131	01.0427	14.06	500097	01.1371	16.12	510070	01.2210	16.05
460021	01.3873	19.20	490037	01.1278	13.27	500001	01.3342	20.92	500098	00.9192	13.66	510071	01.2767	14.49
460022	00.9374	19.41	490038	01.2195	12.54	500002	01.4828	18.75	500101	01.0080	17.84	510072	01.0650	13.50
460023	01.1831	20.75	490040	01.4100	.....	500003	01.4073	21.28	500102	00.9391	18.43	510077	01.1079	14.36
460024	00.8662	13.51	490041	01.3633	16.88	500005	01.8398	22.52	500104	01.2622	18.71	510080	01.1530	09.35
460025	00.8105	12.63	490042	01.3475	15.18	500007	01.4207	20.14	500106	00.9247	15.53	510081	01.0320	13.19
460026	01.0881	16.98	490043	01.3704	16.74	500008	01.8411	22.88	500107	01.1321	15.58	510082	01.0578	12.08
460027	00.9430	18.61	490044	01.3658	16.65	500009	01.2857	21.07	500108	01.6669	21.40	510084	00.9741	12.87
460029	01.0255	15.71	490045	01.1319	18.60	500011	01.3718	21.44	500110	01.2887	18.75	510085	01.2422	17.99
460030	01.2141	15.78	490046	01.4645	17.24	500012	01.5217	20.94	500118	01.1240	20.88	510086	01.0448	15.65
460032	01.0120	19.00	490047	01.0663	16.34	500014	01.5715	22.36	500119	01.3333	20.48	520002	01.2873	17.24
460033	00.9450	18.22	490048	01.4906	17.53	500015	01.3714	20.92	500122	01.1925	20.27	520003	01.1635	15.19
460035	00.9610	10.93	490050	01.4363	20.06	500016	01.4877	22.76	500123	00.8543	14.78	520004	01.1581	16.53
460036	00.9397	19.41	490052	01.6013	15.06	500019	01.3295	19.82	500124	01.3292	22.39	520006	01.0583	18.05
460037	01.0502	15.92	490053	01.2501	14.14	500021	01.5380	20.77	500125	00.9834	10.72	520007	01.2469	14.14
460039	01.0976	21.08	490054	01.1101	13.91	500023	01.1763	19.09	500129	01.7339	22.41	520008	01.5546	20.54
460041	01.2179	18.29	490057	01.5486	17.02	500024	01.6324	21.06	500132	01.0006	19.79	520009	01.5961	16.88
460042	01.4657	16.14	490059	01.5727	18.24	500025	01.8715	21.69	500134	00.7903	15.75	520010	01.1768	19.39
460043	00.9888	20.44	490060	01.0661	16.72	500026	01.4324	22.42	500137	00.7110	19.99	520011	01.2031	16.46
460044	01.2018	19.41	490063	01.6611	22.34	500027	01.5334	23.68	500138	03.4209	.....	520013	01.2909	17.88
460046	00.7432	10.23	490066	01.2178	17.42	500028	01.0839	14.76	500139	01.4763	21.33	520014	01.2083	15.55

PAGE 16 OF 16

Provider	Case mix index	Avg. hour wage	Provider	Case mix index	Avg. hour wage	Provider	Case mix index	Avg. hour wage	Provider	Case mix index	Avg. hour wage	Provider	Case mix index	Avg. hour wage
520015	01.1174	16.65	520107	01.2599	17.46	530026	01.0473	14.63						
520016	01.0872	12.75	520109	00.9937	17.25	530027	00.8416	09.56						
520017	01.1927	16.87	520110	01.1756	16.47	530029	00.9590	13.49						
520018	01.0801	15.88	520111	00.9841	14.44	530031	00.8745	10.95						
520019	01.2873	16.65	520112	01.0805	18.15	530032	01.1558	17.33						
520021	01.3538	19.16	520113	01.1645	17.80									
520024	01.0377	13.33	520114	01.1037	12.61									
520025	01.1242	15.19	520115	01.3222	15.89									
520026	01.1051	17.48	520116	01.2576	17.66									
520027	01.2244	19.22	520117	01.0303	15.40									
520028	01.3261	17.60	520118	00.9469	10.95									
520029	00.9657	16.70	520120	00.8647	11.95									
520030	01.6772	20.19	520121	00.9763	14.18									
520031	01.1054	16.11	520122	00.9894	13.96									
520032	01.1683	14.56	520123	01.1427	16.55									
520033	01.1820	15.91	520124	01.1255	14.34									
520034	01.1271	17.17	520130	01.0776	12.60									
520035	01.2587	14.67	520131	01.0620	15.82									
520037	01.6518	18.23	520132	01.1878	14.31									
520038	01.4916	17.14	520134	01.0269	15.14									
520039	00.9998	16.24	520135	00.9427	13.84									
520040	01.4327	20.05	520136	01.4778	18.87									
520041	01.1487	14.54	520138	01.8773	18.18									
520042	01.0742	16.25	520139	01.2893	18.50									
520044	01.3803	16.09	520140	01.6143	19.31									
520045	01.6794	17.97	520141	01.1223	15.63									
520047	01.0211	14.50	520142	00.9152	12.48									
520048	01.4410	17.67	520144	01.0302	16.10									
520049	01.9925	17.97	520145	00.9155	16.57									
520051	02.0296	19.41	520146	01.0749	13.71									
520053	01.1007	14.78	520148	01.1668	15.34									
520054	01.0919	16.40	520149	00.9581	13.31									
520056	01.3164	17.77	520151	01.0803	14.43									
520057	01.1308	16.08	520152	01.1177	16.38									
520058	01.0511	17.87	520153	00.9775	13.19									
520059	01.3130	18.17	520154	01.1520	16.15									
520060	01.2970	15.15	520156	01.1216	16.37									
520062	01.2707	16.18	520157	00.9447	13.70									
520063	01.2571	17.61	520159	00.9412	16.25									
520064	01.7132	18.60	520160	01.7643	17.77									
520066	01.4169	17.73	520161	01.0283	14.76									
520068	00.8891	15.82	520170	01.2367	18.51									
520069	01.1915	16.75	520171	00.9904	13.69									
520070	01.6012	16.93	520173	01.1609	17.36									
520071	01.1175	17.71	520174	01.3641	20.57									
520074	01.1086	14.96	520177	01.6458	20.33									
520075	01.4753	17.44	520178	01.0634	14.61									
520076	01.1296	14.40	520186	02.5906	.....									
520077	01.0286	14.50	530002	01.1932	18.07									
520078	01.5021	17.89	530003	00.9310	12.59									
520082	01.3454	15.25	530004	01.0270	13.17									
520083	01.5871	21.59	530005	01.1389	13.19									
520084	01.0883	15.73	530006	01.1268	16.83									
520087	01.6162	17.16	530007	01.0516	11.52									
520088	01.2469	17.56	530008	01.2810	17.75									
520089	01.5230	18.79	530009	00.9688	20.60									
520090	01.2710	16.16	530010	01.2195	16.30									
520091	01.3709	17.25	530011	01.0899	15.27									
520092	01.1124	15.11	530012	01.5874	17.25									
520094	01.0158	16.07	530014	01.3289	15.01									
520095	01.3510	18.56	530015	01.1500	19.22									
520096	01.4979	17.78	530016	01.2060	11.87									
520097	01.3308	17.90	530017	01.0038	16.09									
520098	01.7143	19.40	530018	01.0645	14.57									
520100	01.2350	15.91	530019	00.9449	14.32									
520101	01.0947	15.75	530022	01.1147	15.94									
520102	01.2141	19.00	530023	00.8514	17.76									
520103	01.3242	17.70	530025	01.3686	18.12									

Note: Case mix indexes do not include discharges from PPS-exempt units. Case mix indexes include cases received in HCFA central office through December 1995.

TABLE 4A.—WAGE INDEX AND CAPITAL GEOGRAPHIC ADJUSTMENT FACTOR (GAF) FOR URBAN AREAS

Urban area (constituent counties or county equivalents)	Wage index	GAF
0040 Abilene, TX	0.8055	0.8623
Taylor, TX		
0060 Aguadilla, PR	0.4430	0.5726
Aguada, PR		
Aguadilla, PR		
Moca, PR		
0080 Akron, OH	0.9875	0.9914
Portage, OH		
Summit, OH		
0120 Albany, GA	0.8353	0.8841
Dougherty, GA		
Lee, GA		
0160 Albany-Schenectady-Troy, NY	0.8510	0.8954
Albany, NY		
Montgomery, NY		
Rensselaer, NY		
Saratoga, NY		
Schenectady, NY		
Schoharie, NY		
0200 Albuquerque, NM	0.9390	0.9578
Bernalillo, NM		
Sandoval, NM		
Valencia, NM		
0220 Alexandria, LA	0.8213	0.8739
Rapides, LA		
0240 Allentown-Bethlehem-Easton, PA	1.0014	1.0160
Carbon, PA		
Lehigh, PA		
Northampton, PA		
0280 Altoona, PA	0.9531	0.9676
Blair, PA		
0320 Amarillo, TX	0.8557	0.8988
Potter, TX		
Randall, TX		
0380 Anchorage, AK	1.3285	1.3104
Anchorage, AK		
0440 Ann Arbor, MI	1.1688	1.1218
Lenawee, MI		
Livingston, MI		
Washtenaw, MI		
0450 Anniston, AL	0.7848	0.8471
Calhoun, AL		
0460 Appleton-Oshkosh-Neenah, WI	0.8910	0.9240
Calumet, WI		
Outagamie, WI		
Winnebago, WI		
0470 Arecibo, PR	0.4631	0.5903
Arecibo, PR		
Camuy, PR		
Hatillo, PR		
0480 Asheville, NC	0.9365	0.9561
Buncombe, NC		
Madison, NC		
0500 Athens, GA	0.9259	0.9771
Clarke, GA		
Madison, GA		
Oconee, GA		
0520 *Atlanta, GA	1.0089	1.0363
Barrow, GA		
Bartow, GA		
Carroll, GA		
Cherokee, GA		
Clayton, GA		
Cobb, GA		
Coweta, GA		

TABLE 4A.—WAGE INDEX AND CAPITAL GEOGRAPHIC ADJUSTMENT FACTOR (GAF) FOR URBAN AREAS—Continued

Urban area (constituent counties or county equivalents)	Wage index	GAF
DeKalb, GA		
Douglas, GA		
Fayette, GA		
Forsyth, GA		
Fulton, GA		
Gwinnett, GA		
Henry, GA		
Newton, GA		
Paulding, GA		
Pickens, GA		
Rockdale, GA		
Spalding, GA		
Walton, GA		
0560 Atlantic-Cape May, NJ	1.1102	1.0742
Atlantic, NJ		
Cape May, NJ		
0600 Augusta-Aiken, GA–SC	0.8849	0.9197
Columbia, GA		
McDuffie, GA		
Richmond, GA		
Aiken, SC		
Edgefield, SC		
0640 Austin-San Marcos, TX	0.9252	0.9482
Bastrop, TX		
Caldwell, TX		
Hays, TX		
Travis, TX		
Williamson, TX		
0680 Bakersfield, CA	1.0202	1.0168
Kern, CA		
0720 *Baltimore, MD	0.9820	1.0173
Anne Arundel, MD		
Baltimore, MD		
Baltimore City, MD		
Carroll, MD		
Harford, MD		
Howard, MD		
Queen Anne's, MD		
0733 Bangor, ME	0.9412	0.9594
Penobscot, ME		
0743 Barnstable-Yarmouth, MA	1.3682	1.2395
Barnstable, MA		
0760 Baton Rouge, LA	0.8442	0.8905
Ascension, LA		
East Baton Rouge, LA		
Livingston, LA		
West Baton Rouge, LA		
0840 Beaumont-Port Arthur, TX	0.8578	0.9003
Hardin, TX		
Jefferson, TX		
Orange, TX		
0860 Bellingham, WA	1.1342	1.0901
Whatcom, WA		
0870 Benton Harbor, MI	0.8553	0.8985
Berrien, MI		
0875 *Bergen-Passaic, NJ	1.1717	1.1146
Bergen, NJ		
Passaic, NJ		
0880 Billings, MT	0.8903	0.9235

TABLE 4A.—WAGE INDEX AND CAPITAL GEOGRAPHIC ADJUSTMENT FACTOR (GAF) FOR URBAN AREAS—Continued

Urban area (constituent counties or county equivalents)	Wage index	GAF
Yellowstone, MT		
0920 Biloxi-Gulfport-Pascagoula, MS	0.8573	0.8999
Hancock, MS		
Harrison, MS		
Jackson, MS		
0960 Binghamton, NY	0.8842	0.9192
Broome, NY		
Tioga, NY		
1000 Birmingham, AL	0.9047	0.9337
Blount, AL		
Jefferson, AL		
St. Clair, AL		
Shelby, AL		
1010 Bismarck, ND	0.7976	0.8565
Burleigh, ND		
Morton, ND		
1020 Bloomington, IN	0.8619	0.9303
Monroe, IN		
1040 Bloomington-Normal, IL	0.8921	0.9248
McLean, IL		
1080 Boise City, ID	0.9269	0.9493
Ada, ID		
Canyon, ID		
1123 *Boston-Worcester-Lawrence-Lowell-Brockton, MA–NH	1.1639	1.1428
Bristol, MA		
Essex, MA		
Middlesex, MA		
Norfolk, MA		
Plymouth, MA		
Suffolk, MA		
Worcester, MA		
Hillsborough, NH		
Merrimack, NH		
Rockingham, NH		
Strafford, NH		
1125 Boulder-Longmont, CO	0.9383	0.9573
Boulder, CO		
1145 Brazoria, TX	0.8865	0.9208
Brazoria, TX		
1150 Bremerton, WA	1.0926	1.0625
Kitsap, WA		
1240 Brownsville-Harlingen-San Benito, TX	0.8561	0.8991
Cameron, TX		
1260 Bryan-College Station, TX	0.8760	0.9133
Brazos, TX		
1280 *Buffalo-Niagara Falls, NY	0.9123	0.9673
Erie, NY		
Niagara, NY		
1303 Burlington, VT	0.9126	0.9393
Chittenden, VT		
Franklin, VT		
Grand Isle, VT		
1310 Caguas, PR	0.4661	0.5929
Caguas, PR		
Cayey, PR		
Cidra, PR		
Gurabo, PR		
San Lorenzo, PR		

TABLE 4A.—WAGE INDEX AND CAPITAL GEOGRAPHIC ADJUSTMENT FACTOR (GAF) FOR URBAN AREAS—Continued

Urban area (constituent counties or county equivalents)	Wage index	GAF
1320 Canton-Massillon, OH	0.8667	0.9067
Carroll, OH		
Stark, OH		
1350 Casper, WY	0.8841	0.9191
Natrona, WY		
1360 Cedar Rapids, IA	0.8477	0.8930
Linn, IA		
1400 Champaign-Urbana, IL	0.9413	0.9594
Champaign, IL		
1440 Charleston-North Charleston, SC	0.8984	0.9293
Berkeley, SC		
Charleston, SC		
Dorchester, SC		
1480 Charleston, WV	0.9547	0.9688
Kanawha, WV		
Putnam, WV		
1520 *Charlotte-Gastonia-Rock Hill, NC–SC	0.9631	1.0038
Cabarrus, NC		
Gaston, NC		
Lincoln, NC		
Mecklenburg, NC		
Rowan, NC		
Union, NC		
York, SC		
1540 Charlottesville, VA	0.9175	0.9427
Albemarle, VA		
Charlottesville City, VA		
Fluvanna, VA		
Greene, VA		
1560 Chattanooga, TN-GA	0.8867	0.9210
Catoosa, GA		
Dade, GA		
Walker, GA		
Hamilton, TN		
Marion, TN		
1580 Cheyenne, WY	0.7695	0.8357
Laramie, WY		
1600 *Chicago, IL	1.0756	1.0827
Cook, IL		
DeKalb, IL		
DuPage, IL		
Grundy, IL		
Kane, IL		
Kendall, IL		
Lake, IL		
McHenry, IL		
Will, IL		
1620 Chico-Paradise, CA	1.0441	1.0300
Butte, CA		
1640 *Cincinnati, OH–KY–IN	0.9477	0.9928
Dearborn, IN		
Ohio, IN		
Boone, KY		
Campbell, KY		
Gallatin, KY		
Grant, KY		
Kenton, KY		
Pendleton, KY		
Brown, OH		
Clermont, OH		
Hamilton, OH		
Warren, OH		
1660 Clarksville-Hopkinsville, TN–KY	0.7733	0.8386
Christian, KY		
Montgomery, TN		
1680 *Cleveland-Lorain-Elyria, OH	0.9908	1.0235
Ashtabula, OH		
Cuyahoga, OH		
Geauga, OH		
Lake, OH		
Lorain, OH		
Medina, OH		
1720 Colorado Springs, CO	0.9456	0.9624
El Paso, CO		
1740 Columbia, MO	0.8919	0.9246
Boone, MO		
1760 Columbia, SC	0.9178	0.9430
Lexington, SC		
Richland, SC		
1800 Columbus, GA–AL	0.7655	0.8328
Russell, AL		
Chattanoochee, GA		
Harris, GA		
Muscogee, GA		
1840 *Columbus, OH	0.9699	1.0087
Delaware, OH		
Fairfield, OH		
Franklin, OH		
Licking, OH		
Madison, OH		
Pickaway, OH		
1880 Corpus Christi, TX	0.8641	0.9048
Nueces, TX		
San Patricio, TX		
1900 Cumberland, MD–WV	0.8613	0.9028
Allegany, MD		
Mineral, WV		
1920 *Dallas, TX	0.9530	0.9966
Collin, TX		
Dallas, TX		
Denton, TX		
Ellis, TX		
Henderson, TX		
Hunt, TX		
Kaufman, TX		
Rockwall, TX		
1950 Danville, VA	0.8516	0.8958
Danville City, VA		
Pittsylvania, VA		
1960 Davenport-Moline-Rock Island, IA–IL	0.8407	0.8880
Scott, IA		
Henry, IL		
Rock Island, IL		
2000 Dayton-Springfield, OH	0.9582	0.9858
Clark, OH		
Greene, OH		
Miami, OH		
Montgomery, OH		
2020 Daytona Beach, FL	0.8891	0.9296
Flagler, FL		
Volusia, FL		
2030 Decatur, AL	0.8403	0.8877
Lawrence, AL		
Morgan, AL		
2040 Decatur, IL	0.7866	0.8484
Macon, IL		
2080 *Denver, CO	1.0291	1.0504
Adams, CO		
Arapahoe, CO		
Denver, CO		
Douglas, CO		
Jefferson, CO		
2120 Des Moines, IA	0.8772	0.9142
Dallas, IA		
Polk, IA		
Warren, IA		
2160 *Detroit, MI	1.0748	1.0822
Lapeer, MI		
Macomb, MI		
Monroe, MI		
Oakland, MI		
St. Clair, MI		
Wayne, MI		
2180 Dothan, AL	0.7758	0.8404
Dale, AL		
Houston, AL		
2190 Dover, DE	0.9017	0.9595
Kent, DE		
2200 Dubuque, IA	0.8149	0.8692
Dubuque, IA		
2240 Duluth-Superior, MN–WI	0.9437	0.9611
St. Louis, MN		
Douglas, WI		
2281 Dutchess County, NY	1.0604	1.0488
Dutchess, NY		
2290 Eau Claire, WI	0.8698	0.9089
Chippewa, WI		
Eau Claire, WI		
2320 El Paso, TX	0.9486	0.9645
El Paso, TX		
2330 Elkhart-Goshen, IN	0.8820	0.9176
Elkhart, IN		
2335 Elmira, NY	0.8436	0.8901
Chemung, NY		
2340 Enid, OK	0.7879	0.8494
Garfield, OK		
2360 Erie, PA	0.9137	0.9401
Erie, PA		
2400 Eugene-Springfield, OR	1.1503	1.1006
Lane, OR		
2440 Evansville-Henderson, IN–KY	0.8990	0.9297
Posey, IN		
Vanderburgh, IN		
Warrick, IN		
Henderson, KY		
2520 Fargo-Moorhead, ND–MN	0.9010	0.9311

TABLE 4A.—WAGE INDEX AND CAPITAL GEOGRAPHIC ADJUSTMENT FACTOR (GAF) FOR URBAN AREAS—Continued

Urban area (constituent counties or county equivalents)	Wage index	GAF
Clay, MN		
Cass, ND		
2560 Fayetteville, NC	0.9025	0.9322
Cumberland, NC		
2580 Fayetteville-Springdale-Rogers, AR	0.7236	0.8013
Benton, AR		
Washington, AR		
2620 Flagstaff, AZ–UT	0.9039	0.9331
Coconino, AZ		
Kane, UT		
2640 Flint, MI	1.1273	1.0964
Genesee, MI		
2650 Florence, AL	0.8157	0.8698
Colbert, AL		
Lauderdale, AL		
2655 Florence, SC	0.8614	0.9029
Florence, SC		
2670 Fort Collins-Loveland, CO	1.0628	1.0426
Larimer, CO		
2680 *Ft. Lauderdale, FL	1.0968	1.0973
Broward, FL		
2700 Fort Myers-Cape Coral, FL	0.9093	0.9370
Lee, FL		
2710 Fort Pierce-Port St. Lucie, FL	1.0192	1.0131
Martin, FL		
St. Lucie, FL		
2720 Fort Smith, AR–OK	0.7885	0.8498
Crawford, AR		
Sebastian, AR		
Sequoyah, OK		
2750 Fort Walton Beach, FL	0.9186	0.9435
Okaloosa, FL		
2760 Fort Wayne, IN	0.8819	0.9175
Adams, IN		
Allen, IN		
DeKalb, IN		
Huntington, IN		
Wells, IN		
Whitley, IN		
2800 *Forth Worth-Arlington, TX	1.0095	1.0367
Hood, TX		
Johnson, TX		
Parker, TX		
Tarrant, TX		
2840 Fresno, CA	1.1202	1.0808
Fresno, CA		
Madera, CA		
2880 Gadsden, AL	0.8901	0.9234
Etowah, AL		
2900 Gainesville, FL	0.9455	0.9623
Alachua, FL		
2920 Galveston-Texas City, TX	1.1022	1.0796
Galveston, TX		
2960 Gary, IN	0.9176	0.9428
Lake, IN		
Porter, IN		
2975 Glens Falls, NY	0.8560	0.8990
Warren, NY		
Washington, NY		
2980 Goldsboro, NC	0.8412	0.8883
Wayne, NC		
2985 Grand Forks, ND–MN	0.9228	0.9465
Polk, MN		
Grand Forks, ND		
2995 Grand Junction, CO	0.8847	0.9195
Mesa, CO		
3000 Grand Rapids-Muskegon-Holland, MI	1.0088	1.0060
Allegan, MI		
Kent, MI		
Muskegon, MI		
Ottawa, MI		
3040 Great Falls, MT	0.9007	0.9309
Cascade, MT		
3060 Greeley, CO	0.9712	0.9802
Weld, CO		
3080 Green Bay, WI	0.9387	0.9576
Brown, WI		
3120 *Greensboro-Winston-Salem-High Point, NC	0.9327	0.9820
Alamance, NC		
Davidson, NC		
Davie, NC		
Forsyth, NC		
Guilford, NC		
Randolph, NC		
Stokes, NC		
Yadkin, NC		
3150 Greenville, NC	0.9098	0.9373
Pitt, NC		
3160 Greenville-Spartanburg-Anderson, SC	0.8947	0.9266
Anderson, SC		
Cherokee, SC		
Greenville, SC		
Pickens, SC		
Spartanburg, SC		
3180 Hagerstown, MD	0.9195	0.9441
Washington, MD		
3200 Hamilton-Middletown, OH	0.9515	0.9665
Butler, OH		
3240 Harrisburg-Lebanon-Carlisle, PA	1.0181	1.0124
Cumberland, PA		
Dauphin, PA		
Lebanon, PA		
Perry, PA		
3283 *Hartford, CT	1.2395	1.1931
Hartford, CT		
Litchfield, CT		
Middlesex, CT		
Tolland, CT		
3285 Hattiesburg, MS	0.7269	0.8038
Forrest, MS		
Lamar, MS		
3290 Hickory-Morganton-Lenoir, NC	0.7945	0.8542
Alexander, NC		
Burke, NC		
Caldwell, NC		
Catawba, NC		
3320 Honolulu, HI	1.1487	1.1776
Honolulu, HI		
3350 Houma, LA	0.7843	0.8518
Lafourche, LA		
Terrebonne, LA		
3360 *Houston, TX	0.9790	1.0151
Chambers, TX		
Fort Bend, TX		
Harris, TX		
Liberty, TX		
Montgomery, TX		
Waller, TX		
3400 Huntington-Ashland, WV–KY–OH	0.9194	0.9441
Boyd, KY		
Carter, KY		
Greenup, KY		
Lawrence, OH		
Cabell, WV		
Wayne, WV		
3440 Huntsville, AL	0.8145	0.8689
Limestone, AL		
Madison, AL		
3480 *Indianapolis, IN	0.9950	1.0265
Boone, IN		
Hamilton, IN		
Hancock, IN		
Hendricks, IN		
Johnson, IN		
Madison, IN		
Marion, IN		
Morgan, IN		
Shelby, IN		
3500 Iowa City, IA	0.9382	0.9573
Johnson, IA		
3520 Jackson, MI	0.9066	0.9351
Jackson, MI		
3560 Jackson, MS	0.7906	0.8514
Hinds, MS		
Madison, MS		
Rankin, MS		
3580 Jackson, TN	0.8340	0.8831
Madison, TN		
3605 Jacksonville, FL	0.9018	0.9317
Clay, FL		
Duval, FL		
Nassau, FL		
St. Johns, FL		
3605 Jacksonville, NC	0.7071	0.7887
Onslow, NC		
3610 Jamestown, NY	0.7679	0.8346
Chautaqua, NY		
3620 Janesville-Beloit, WI	0.8664	0.9065
Rock, WI		
3640 Jersey City, NJ	1.1408	1.1236
Hudson, NJ		
3660 Johnson City-Kingsport-Bristol, TN–VA	0.8921	0.9248
Carter, TN		
Hawkins, TN		
Sullivan, TN		
Unicoi, TN		
Washington, TN		

TABLE 4A.—WAGE INDEX AND CAPITAL GEOGRAPHIC ADJUSTMENT FACTOR (GAF) FOR URBAN AREAS—Continued

Urban area (constituent counties or county equivalents)	Wage index	GAF
Bristol City, VA		
Scott, VA		
Washington, VA		
3680 Johnstown, PA	0.8417	0.8887
Cambria, PA		
Somerset, PA		
3710 Joplin, MO	0.7409	0.8144
Jasper, MO		
Newton, MO		
3720 Kalamazoo-Battlecreek, MI	1.0565	1.0384
Calhoun, MI		
Kalamazoo, MI		
Van Buren, MI		
3740 Kankakee, IL	0.8998	0.9582
Kankakee, IL		
3760 *Kansas City, KS–MO	0.9522	0.9960
Johnson, KS		
Leavenworth, KS		
Miami, KS		
Wyandotte, KS		
Cass, MO		
Clay, MO		
Clinton, MO		
Jackson, MO		
Lafayette, MO		
Platte, MO		
Ray, MO		
3800 Kenosha, WI	0.9166	0.9421
Kenosha, WI		
3810 Killeen-Temple, TX	1.0415	1.0282
Bell, TX		
Coryell, TX		
3840 Knoxville, TN	0.8520	0.8961
Anderson, TN		
Blount, TN		
Knox, TN		
Loudon, TN		
Sevier, TN		
Union, TN		
3850 Kokomo, IN	0.8609	0.9025
Howard, IN		
Tipton, IN		
3870 La Crosse, WI–MN	0.8638	0.9046
Houston, MN		
La Crosse, WI		
3880 Lafayette, LA	0.8183	0.8717
Acadia, LA		
Lafayette, LA		
St. Landry, LA		
St. Martin, LA		
3920 Lafayette, IN	0.8824	0.9179
Clinton, IN		
Tippecanoe, IN		
3960 Lake Charles, LA	0.8052	0.8621
Calcasieu, LA		
3980 Lakeland-Winter Haven, FL	0.8677	0.9074
Polk, FL		
4000 Lancaster, PA	0.9605	0.9786
Lancaster, PA		
4040 Lansing-East Lansing, MI	1.0016	1.0011
Clinton, MI		
Eaton, MI		
Ingham, MI		
4080 Laredo, TX	0.7092	0.7903
Webb, TX		
4100 Las Cruces, NM	0.8516	0.8958
Dona Ana, NM		
4120 *Las Vegas, NV–AZ	1.0894	1.0922
Mohave, AZ		
Clark, NV		
Nye, NV		
4150 Lawrence, KS	0.8616	0.9301
Douglas, KS		
4200 Lawton, OK	0.8339	0.8830
Comanche, OK		
4243 Lewiston-Auburn, ME	0.9431	0.9607
Androscoggin, ME		
4280 Lexington, KY	0.8387	0.8865
Bourbon, KY		
Clark, KY		
Fayette, KY		
Jessamine, KY		
Madison, KY		
Scott, KY		
Woodford, KY		
4320 Lima, OH	0.8752	0.9128
Allen, OH		
Auglaize, OH		
4360 Lincoln, NE	0.9193	0.9440
Lancaster, NE		
4400 Little Rock-North Little Rock, AR	0.8616	0.9030
Faulkner, AR		
Lonoke, AR		
Pulaski, AR		
Saline, AR		
4420 Longview-Marshall, TX	0.8633	0.9042
Gregg, TX		
Harrison, TX		
Upshur, TX		
4480 *Los Angeles-Long Beach, CA	1.2396	1.1932
Los Angeles, CA		
4520 Louisville, KY–IN	0.9445	0.9617
Clark, IN		
Floyd, IN		
Harrison, IN		
Scott, IN		
Bullitt, KY		
Jefferson, KY		
Oldham, KY		
4600 Lubbock, TX	0.8525	0.8965
Lubbock, TX		
4640 Lynchburg, VA	0.8036	0.8609
Amherst, VA		
Bedford, VA		
Bedford City, VA		
Campbell, VA		
Lynchburg City, VA		
4680 Macon, GA	0.8836	0.9187
Bibb, GA		
Houston, GA		
Jones, GA		
Peach, GA		
Twiggs, GA		
4720 Madison, WI	1.0048	1.0033
Dane, WI		
4800 Mansfield, OH	0.8543	0.8978
Crawford, OH		
Richland, OH		
4840 Mayaguez, PR	0.4186	0.5508
Anasco, PR		
Cabo Rojo, PR		
Hormigueros, PR		
Mayaguez, PR		
Sabana Grande, PR		
San German, PR		
4880 McAllen-Edinburg-Mission, TX	0.8502	0.8948
Hidalgo, TX		
4890 Medford-Ashland, OR	1.0213	1.0145
Jackson, OR		
4900 Melbourne-Titusville-Palm Bay, FL	0.9089	0.9507
Brevard, FL		
4920 *Memphis, TN–AR–MS	0.8185	0.8980
Crittenden, AR		
DeSoto, MS		
Fayette, TN		
Shelby, TN		
Tipton, TN		
4940 Merced, CA	1.0684	1.0463
Merced, CA		
5000 *Miami, FL	0.9240	0.9757
Dade, FL		
5015 *Middlesex-Somerset-Hunterdon, NJ	1.0777	1.0842
Hunterdon, NJ		
Middlesex, NJ		
Somerset, NJ		
5080 *Milwaukee-Waukesha, WI	0.9667	1.0064
Milwaukee, WI		
Ozaukee, WI		
Washington, WI		
Waukesha, WI		
5120 *Minneapolis-St. Paul, MN–WI	1.0785	1.0847
Anoka, MN		
Carver, MN		
Chisago, MN		
Dakota, MN		
Hennepin, MN		
Isanti, MN		
Ramsey, MN		
Scott, MN		
Sherburne, MN		
Washington, MN		
Wright, MN		
Pierce, WI		
St. Croix, WI		
5160 Mobile, AL	0.7999	0.8582
Baldwin, AL		
Mobile, AL		
5170 Modesto, CA	1.0135	1.0092
Stanislaus, CA		
5190 *Monmouth-Ocean, NJ	1.0842	1.0569
Monmouth, NJ		

TABLE 4A.—WAGE INDEX AND CAPITAL GEOGRAPHIC ADJUSTMENT FACTOR (GAF) FOR URBAN AREAS—Continued

Urban area (constituent counties or county equivalents)	Wage index	GAF
Ocean, NJ		
5200 Monroe, LA	0.8234	0.8754
Ouachita, LA		
5240 Montgomery, AL	0.7949	0.8545
Autauga, AL		
Elmore, AL		
Montgomery, AL		
5280 Muncie, IN	0.9736	1.0113
Delaware, IN		
5330 Myrtle Beach, SC	0.7798	0.8434
Horry, SC		
5345 Naples, FL	1.0222	1.0151
Collier, FL		
5360 *Nashville, TN	0.9065	0.9630
Cheatham, TN		
Davidson, TN		
Dickson, TN		
Robertson, TN		
Rutherford TN		
Sumner, TN		
Williamson, TN		
Wilson, TN		
5380 *Nassau-Suffolk, NY	1.2852	1.2231
Nassau, NY		
Suffolk, NY		
5483 *New Haven-Bridgeport-Stamford-Waterbury-	1.2778	1.2183
Danbury, CT		
Fairfield, CT		
New Haven, CT		
5523 New London-Norwich, CT	1.2345	1.1898
New London, CT		
5560 *New Orleans, LA	0.9434	0.9897
Jefferson, LA		
Orleans, LA		
Plaquemines, LA		
St. Bernard, LA		
St. Charles, LA		
St. James, LA		
St. John The Baptist, LA		
St. Tammany, LA		
5600 *New York, NY	1.4041	1.2995
Bronx, NY		
Kings, NY		
New York, NY		
Putnam, NY		
Queens, NY		
Richmond, NY		
Rockland, NY		
Westchester, NY		
5640 *Newark, NJ	1.1057	1.1034
Essex, NJ		
Morris, NJ		
Sussex, NJ		
Union, NJ		
Warren, NJ		
5660 Newburgh, NY–PA	1.0829	1.0561
Orange, NY		
Pike, PA		

TABLE 4A.—WAGE INDEX AND CAPITAL GEOGRAPHIC ADJUSTMENT FACTOR (GAF) FOR URBAN AREAS—Continued

Urban area (constituent counties or county equivalents)	Wage index	GAF
5720 *Norfolk-Virginia Beach-Newport News, VA–NC	0.8326	0.9086
Currituck, NC		
Chesapeake City, VA		
Gloucester, VA		
Hampton City, VA		
Isle of Wight, VA		
James City, VA		
Mathews, VA		
Newport News City, VA		
Norfolk City, VA		
Poquoson City, VA		
Portsmouth City, VA		
Suffolk City, VA		
Virginia Beach City, VA		
Williamsburg City, VA		
York, VA		
5775 *Oakland, CA	1.5113	1.3666
Alameda, CA		
Contra Costa, CA		
5790 Ocala, FL	0.8999	0.9303
Marion, FL		
5800 Odessa-Midland, TX	0.8552	0.8984
Ector, TX		
Midland, TX		
5880 *Oklahoma City, OK	0.8463	0.9188
Canadian, OK		
Cleveland, OK		
Logan, OK		
McClain, OK		
Oklahoma, OK		
Pottawatomie, OK		
5910 Olympia, WA	1.0713	1.0483
Thurston, WA		
5920 Omaha, NE–IA	0.9425	0.9603
Pottawattamie, IA		
Cass, NE		
Douglas, NE		
Sarpy, NE		
Washington, NE		
5945 *Orange County, CA	1.1929	1.1622
Orange, CA		
5960 *Orlando, FL	0.9491	0.9938
Lake, FL		
Orange, FL		
Osceola, FL		
Seminole, FL		
5990 Owensboro, KY	0.7578	0.8270
Daviess, KY		
6015 Panama City, FL	0.8080	0.8642
Bay, FL		
6020 Parkersburg-Marietta, WV–OH	0.7895	0.8506
Washington, OH		
Wood, WV		
6080 Pensacola, FL	0.8212	0.8738
Escambia, FL		
Santa Rosa, FL		
6120 Peoria-Pekin, IL	0.8923	0.9249
Peoria, IL		
Tazewell, IL		

TABLE 4A.—WAGE INDEX AND CAPITAL GEOGRAPHIC ADJUSTMENT FACTOR (GAF) FOR URBAN AREAS—Continued

Urban area (constituent counties or county equivalents)	Wage index	GAF
Woodford, IL		
6160 *Philadelphia, PA–NJ	1.1197	1.1129
Burlington, NJ		
Camden, NJ		
Gloucester, NJ		
Salem, NJ		
Bucks, PA		
Chester, PA		
Delaware, PA		
Montgomery, PA		
Philadelphia, PA		
6200 *Phoenix-Mesa, AZ	0.9832	1.0181
Maricopa, AZ		
Pinal, AZ		
6240 Pine Bluff, AR	0.7904	0.8512
Jefferson, AR		
6280 *Pittsburgh, PA	0.9726	1.0106
Allegheny, PA		
Beaver, PA		
Butler, PA		
Fayette, PA		
Washington, PA		
Westmoreland, PA		
6323 Pittsfield, MA	1.0570	1.0387
Berkshire, MA		
6360 Ponce, PR	0.4500	0.5788
Guayanilla, PR		
Juana Diaz, PR		
Penuelas, PR		
Ponce, PR		
Villalba, PR		
Yauco, PR		
6403 Portland, ME	0.9615	0.9735
Cumberland, ME		
Sagadahoc, ME		
York, ME		
6440 *Portland-Vancouver, OR–WA	1.1267	1.1177
Clackamas, OR		
Columbia, OR		
Multnomah, OR		
Washington, OR		
Yamhill, OR		
Clark, WA		
6483 Providence-Warwick-Pawtucket, RI	1.1116	1.0751
Bristol, RI		
Kent, RI		
Newport, RI		
Providence, RI		
Washington, RI		
6520 Provo-Orem, UT	1.0139	1.0095
Utah, UT		
6560 Pueblo, CO	0.8302	0.8804
Pueblo, CO		
6580 Punta Gorda, FL	0.8284	0.8790
Charlotte, FL		
6600 Racine, WI	0.8855	0.9201
Racine, WI		
6640 Raleigh-Durham-Chapel Hill, NC	0.9740	0.9821
Chatham, NC		
Durham, NC		
Franklin, NC		
Johnston, NC		

TABLE 4A.—WAGE INDEX AND CAPITAL GEOGRAPHIC ADJUSTMENT FACTOR (GAF) FOR URBAN AREAS—Continued

Urban area (constituent counties or county equivalents)	Wage index	GAF
Orange, NC		
Wake, NC		
6660 Rapid City, SD ...	0.8493	0.8942
Pennington, SD		
6680 Reading, PA	0.9467	0.9728
Berks, PA		
6690 Redding, CA	1.1631	1.1090
Shasta, CA		
6720 Reno, NV	1.1043	1.0703
Washoe, NV		
6740 Richland-Kennewick-Pasco, WA	0.9993	0.9995
Benton, WA		
Franklin, WA		
6760 Richmond-Petersburg, VA	0.9189	0.9437
Charles City County, VA		
Chesterfield, VA		
Colonial Heights City, VA		
Dinwiddie, VA		
Goochland, VA		
Hanover, VA		
Henrico, VA		
Hopewell City, VA		
New Kent, VA		
Petersburg City, VA		
Powhatan, VA		
Prince George, VA		
Richmond City, VA		
6780 *Riverside-San Bernardino, CA	1.1251	1.1166
Riverside, CA		
San Bernardino, CA		
6800 Roanoke, VA	0.8721	0.9105
Botetourt, VA		
Roanoke, VA		
Roanoke City, VA		
Salem City, VA		
6820 Rochester, MN	1.0452	1.0307
Olmsted, MN		
6840 *Rochester, NY	0.9611	1.0024
Genesee, NY		
Livingston, NY		
Monroe, NY		
Ontario, NY		
Orleans, NY		
Wayne, NY		
6880 Rockford, IL	0.9015	0.9315
Boone, IL		
Ogle, IL		
Winnebago, IL		
6895 Rocky Mount, NC	0.8951	0.9269
Edgecombe, NC		
Nash, NC		
6920 *Sacramento, CA	1.2382	1.1923
El Dorado, CA		
Placer, CA		
Sacramento, CA		
6960 Saginaw-Bay City-Midland, MI	0.9605	0.9728
Bay, MI		
Midland, MI		
Saginaw, MI		

TABLE 4A.—WAGE INDEX AND CAPITAL GEOGRAPHIC ADJUSTMENT FACTOR (GAF) FOR URBAN AREAS—Continued

Urban area (constituent counties or county equivalents)	Wage index	GAF
6980 St. Cloud, MN	0.9478	0.9640
Benton, MN		
Stearns, MN		
7000 St. Joseph, MO	0.8570	0.8997
Andrews, MO		
Buchanan, MO		
7040 *St. Louis, MO–IL	0.8926	0.9529
Clinton, IL		
Jersey, IL		
Madison, IL		
Monroe, IL		
St. Clair, IL		
Franklin, MO		
Jefferson, MO		
Lincoln, MO		
St. Charles, MO		
St. Louis, MO		
St. Louis City, MO		
Warren, MO		
7080 Salem, OR	0.9749	0.9901
Marion, OR		
Polk, OR		
7120 Salinas, CA	1.3835	1.2489
Monterey, CA		
7160 *Salt Lake City-Ogden, UT	0.9677	1.0071
Davis, UT		
Salt Lake, UT		
Weber, UT		
7200 San Angelo, TX	0.7594	0.8282
Tom Green, TX		
7240 *San Antonio, TX	0.8365	0.9115
Bexar, TX		
Comal, TX		
Guadalupe, TX		
Wilson, TX		
7320 *San Diego, CA	1.2183	1.1791
San Diego, CA		
7360 *San Francisco, CA	1.4210	1.3102
Marin, CA		
San Francisco, CA		
San Mateo, CA		
7400 *San Jose, CA ...	1.4435	1.3244
Santa Clara, CA		
7440 *San Juan-Bayamon, PR	0.4616	0.6066
Aguas Buenas, PR		
Barceloneta, PR		
Bayamon, PR		
Canovanas, PR		
Carolina, PR		
Catano, PR		
Ceiba, PR		
Comerio, PR		
Corozal, PR		
Dorado, PR		
Fajardo, PR		
Florida, PR		
Guaynabo, PR		
Humacao, PR		
Juncos, PR		
Los Piedras, PR		
Loiza, PR		
Luguillo, PR		
Manati, PR		

TABLE 4A.—WAGE INDEX AND CAPITAL GEOGRAPHIC ADJUSTMENT FACTOR (GAF) FOR URBAN AREAS—Continued

Urban area (constituent counties or county equivalents)	Wage index	GAF
Morovis, PR		
Naguabo, PR		
Naranjito, PR		
Rio Grande, PR		
San Juan, PR		
Toa Alta, PR		
Toa Baja, PR		
Trujillo Alto, PR		
Vega Alta, PR		
Vega Baja, PR		
Yabucoa, PR		
7460 San Luis Obispo-Atascadero-Paso Robles, CA	1.1587	1.1061
San Luis Obispo, CA		
7480 Santa Barbara-Santa Maria-Lompoc, CA	1.1267	1.0851
Santa Barbara, CA		
7485 Santa Cruz-Watsonville, CA	1.3551	1.2313
Santa Cruz, CA		
7490 Santa Fe, NM	1.0847	1.0573
Los Alamos, NM		
Santa Fe, NM		
7500 Santa Rosa, CA	1.2558	1.1688
Sonoma, CA		
7510 Sarasota-Bradenton, FL	0.9770	0.9842
Manatee, FL		
Sarasota, FL		
7520 Savannah, GA ...	1.0089	1.0061
Bryan, GA		
Chatham, GA		
Effingham, GA		
7560 Scranton–Wilkes-Barre–Hazleton, PA ...	0.8767	0.9138
Columbia, PA		
Lackawanna, PA		
Luzerne, PA		
Wyoming, PA		
7600 *Seattle-Bellevue-Everett, WA	1.1410	1.1274
Island, WA		
King, WA		
Snohomish, WA		
7610 Sharon, PA	0.8764	0.9136
Mercer, PA		
7620 Sheboygan, WI	0.7782	0.8422
Sheboygan, WI		
7640 Sherman-Denison, TX	0.8650	0.9055
Grayson, TX		
7680 Shreveport-Bossier City, LA	0.9379	0.9570
Bossier, LA		
Caddo, LA		
Webster, LA		
7720 Sioux City, IA–NE	0.8331	0.8825
Woodbury, IA		
Dakota, NE		
7760 Sioux Falls, SD	0.8606	0.9023
Lincoln, SD		
Minnehaha, SD		
7800 South Bend, IN	0.9957	0.9971
St. Joseph, IN		

TABLE 4A.—WAGE INDEX AND CAPITAL GEOGRAPHIC ADJUSTMENT FACTOR (GAF) FOR URBAN AREAS—Continued

Urban area (constituent counties or county equivalents)	Wage index	GAF
7840 Spokane, WA	1.0548	1.0372
Spokane, WA		
7880 Springfield, IL	0.8783	0.9150
Menard, IL		
Sangamon, IL		
7920 Springfield, MO	0.7840	0.8465
Christian, MO		
Greene, MO		
Webster, MO		
8003 Springfield, MA	1.0609	1.0552
Hampden, MA		
Hampshire, MA		
8050 State College, PA	0.8875	0.9215
Centre, PA		
8080 Steubenville-Weirton, OH–WV	0.8244	0.9024
Jefferson, OH		
Brooke, WV		
Hancock, WV		
8120 Stockton-Lodi, CA	1.1417	1.0997
San Joaquin, CA		
8140 Sumter, SC	0.7716	0.8373
Sumter, SC		
8160 Syracuse, NY	0.9406	0.9589
Cayuga, NY		
Madison, NY		
Onondaga, NY		
Oswego, NY		
8200 Tacoma, WA	1.0891	1.0655
Pierce, WA		
8240 Tallahassee, FL	0.8332	0.8825
Gadsden, FL		
Leon, FL		
8280 *Tampa-St. Petersburg-Clearwater, FL	0.9322	0.9817
Hernando, FL		
Hillsborough, FL		
Pasco, FL		
Pinellas, FL		
8320 Terre Haute, IN	0.8611	0.9027
Clay, IN		
Vermillion, IN		
Vigo, IN		
8360 Texarkana, AR-Texarkana, TX	0.8484	0.8935
Miller, AR		
Bowie, TX		
8400 Toledo, OH	1.0383	1.0445
Fulton, OH		
Lucas, OH		
Wood, OH		
8440 Topeka, KS	1.0108	1.0074
Shawnee, KS		
8480 Trenton, NJ	1.0572	1.0388
Mercer, NJ		
8520 Tucson, AZ	0.9050	0.9339
Pima, AZ		
8560 Tulsa, OK	0.8113	0.8666
Creek, OK		
Osage, OK		
Rogers, OK		
Tulsa, OK		
Wagoner, OK		
8600 Tuscaloosa, AL	0.7723	0.8378
Tuscaloosa, AL		
8640 Tyler, TX	1.0158	1.0108
Smith, TX		
8680 Utica-Rome, NY	0.8421	0.8890
Herkimer, NY		
Oneida, NY		
8720 Vallejo-Fairfield-Napa, CA	1.3483	1.2271
Napa, CA		
Solano, CA		
8735 Ventura, CA	1.1169	1.0786
Ventura, CA		
8750 Victoria, TX	0.8478	0.8931
Victoria, TX		
8760 Vineland-Millville-Bridgeton, NJ	1.0015	1.0010
Cumberland, NJ		
8780 Visalia-Tulare-Porterville, CA	1.0174	1.0119
Tulare, CA		
8800 Waco, TX	0.7789	0.8427
McLennan, TX		
8840 *Washington, DC–MD–VA–WV	1.0842	1.0886
District of Columbia, DC		
Calvert, MD		
Charles, MD		
Frederick, MD		
Montgomery, MD		
Prince Georges, MD		
Alexandria City, VA		
Arlington, VA		
Clarke, VA		
Culpepper, VA		
Fairfax, VA		
Fairfax City, VA		
Falls Church City, VA		
Fauquier, VA		
Fredericksburg City, VA		
King George, VA		
Loudoun, VA		
Manassas City, VA		
Manassas Park City, VA		
Prince William, VA		
Spotsylvania, VA		
Stafford, VA		
Warren, VA		
Berkeley, WV		
Jefferson, WV		
8920 Waterloo-Cedar Falls, IA	0.8724	0.9108
Black Hawk, IA		
8940 Wausau, WI	1.0347	1.0236
Marathon, WI		
8960 West Palm Beach-Boca Raton, FL	1.0016	1.0036
Palm Beach, FL		
9000 Wheeling, OH–WV	0.7580	0.8313
Belmont, OH		
Marshall, WV		
Ohio, WV		
9040 Wichita, KS	0.9447	0.9618
Butler, KS		
Harvey, KS		
Sedgwick, KS		
9080 Wichita Falls, TX	0.8070	0.8634
Archer, TX		
Wichita, TX		
9140 Williamsport, PA	0.8487	0.8937
Lycoming, PA		
9160 Wilmington-Newark, DE–MD	1.1341	1.1063
New Castle, DE		
Cecil, MD		
9200 Wilmington, NC	0.9072	0.9355
New Hanover, NC		
Brunswick, NC		
9260 Yakima, WA	1.0049	1.0034
Yakima, WA		
9270 Yolo, CA	1.1470	1.0985
Yolo, CA		
9280 York, PA	0.9124	0.9391
York, PA		
9320 Youngstown-Warren, OH	0.9764	0.9838
Columbiana, OH		
Mahoning, OH		
Trumbull, OH		
9340 Yuba City, CA	1.0437	1.0297
Sutter, CA		
Yuba, CA		
9360 Yuma, AZ	0.9518	0.9667
Yuma, AZ		

*Large Urban Area

TABLE 4B.—WAGE INDEX AND CAPITAL GEOGRAPHIC ADJUSTMENT FACTOR (GAF) FOR RURAL AREAS

Nonurban area	Wage index	GAF
Alabama	0.7160	0.7955
Alaska	1.2472	1.2550
Arizona	0.7946	0.8543
Arkansas	0.7000	0.7833
California	0.9991	1.0010
Colorado	0.8156	0.8697
Connecticut	1.2788	1.2189
Delaware	0.9464	0.9630
Florida	0.8677	0.9084
Georgia	0.7659	0.8331
Hawaii	1.0268	1.0771
Idaho	0.8356	0.8843
Illinois	0.7567	0.8286
Indiana	0.8119	0.8718
Iowa	0.7394	0.8132
Kansas	0.7113	0.7922
Kentucky	0.7772	0.8419
Louisiana	0.7284	0.8055
Maine	0.8335	0.8827
Maryland	0.8446	0.8908
Massachusetts	1.0794	1.0537
Michigan	0.8837	0.9188
Minnesota	0.8161	0.8704
Mississippi	0.6808	0.7685
Missouri	0.7249	0.8044

TABLE 4B.—WAGE INDEX AND CAPITAL GEOGRAPHIC ADJUSTMENT FACTOR (GAF) FOR RURAL AREAS—Continued

Nonurban area	Wage index	GAF
Montana	0.8137	0.8683
Nebraska	0.7245	0.8020
Nevada	0.8795	0.9158
New Hampshire	0.9776	0.9895
New Jersey [1]	.....	.....
New Mexico	0.7873	0.8489
New York	0.8565	0.8994
North Carolina	0.7945	0.8565
North Dakota	0.7370	0.8114
Ohio	0.8349	0.8909
Oklahoma	0.6963	0.7805
Oregon	0.9715	0.9813
Pennsylvania	0.8480	0.8939
Puerto Rico	0.4182	0.5505
Rhode Island [1]	.....	.....
South Carolina	0.7679	0.8356
South Dakota	0.7085	0.7898
Tennessee	0.7372	0.8116
Texas	0.7430	0.8166
Utah	0.8854	0.9200
Vermont	0.8941	0.9287
Virginia	0.7760	0.8422
Washington	0.9956	0.9978
West Virginia	0.7943	0.8541
Wisconsin	0.8449	0.8914
Wyoming	0.8202	0.8731

[1] All counties within the State are classified as urban.

TABLE 4C.—WAGE INDEX AND CAPITAL GEOGRAPHIC ADJUSTMENT FACTOR (GAF) FOR HOSPITALS THAT ARE RECLASSIFIED

Area reclassified to	Wage index	GAF
Abilene, TX	0.8055	0.8623
Albuquerque, NM	0.9390	0.9578
Alexandria, LA	0.8213	0.8739
Amarillo, TX	0.8557	0.8988
Anchorage, AK	1.3285	1.2147
Asheville, NC	0.9365	0.9561
Atlanta, GA	0.9986	0.9990
Bangor, ME	0.9412	0.9594
Baton Rouge, LA	0.8442	0.8905
Benton Harbor, MI	0.8553	0.8985
Benton Harbor, MI (Rural Michigan Hosp.)	0.8837	0.9188
Billings, MT	0.8903	0.9235
Birmingham, AL	0.9047	0.9337
Bismarck, ND	0.7976	0.8565
Boise City, ID	0.9269	0.9493
Boston-Worcester-Lawrence-Lowell-Brockton, MA–NH	1.1639	1.1095
Caguas, PR	0.4661	0.5929
Champaign-Urbana, IL	0.8999	0.9303
Charleston-North Charleston, SC	0.8984	0.9293
Charlotte-Gastonia-Rock Hill, NC–SC	0.9631	0.9746
Charlottesville, VA	0.9006	0.9308
Chattanooga, TN–GA	0.8867	0.9210
Chicago, IL	1.0653	1.0443

TABLE 4C.—WAGE INDEX AND CAPITAL GEOGRAPHIC ADJUSTMENT FACTOR (GAF) FOR HOSPITALS THAT ARE RECLASSIFIED—Continued

Area reclassified to	Wage index	GAF
Cincinnati, OH–KY–IN	0.9477	0.9639
Cleveland-Lorain-Elyria, OH	0.9908	0.9937
Columbia, MO	0.8919	0.9246
Columbus, OH	0.9699	0.9793
Dallas, TX	0.9530	0.9676
Davenport-Moline-Rock Island, IA–IL	0.8407	0.8880
Denver, CO	1.0291	1.0198
Des Moines, IA	0.8772	0.9142
Duluth-Superior, MN–WI	0.9437	0.9611
Dutchess County, NY	1.0309	1.0211
Elkhart-Goshen, IN	0.8820	0.9176
Eugene-Springfield, OR	1.1503	1.1006
Fargo-Moorhead, ND–MN	0.8860	0.9205
Fayetteville, NC	0.8658	0.9060
Flagstaff, AR–UT	0.8848	0.9196
Flint, MI	1.1273	1.0855
Florence, AL	0.8157	0.8698
Florence, SC	0.8614	0.9029
Fort Lauderdale, FL	1.0968	1.0653
Fort Pierce-Port St. Lucie, FL	1.0049	1.0034
Fort Smith, AR–OK	0.7885	0.8498
Fort Walton Beach, FL	0.8978	0.9288
Fort Worth-Arlington, TX	1.0095	1.0065
Gadsden, AL	0.8901	0.9234
Gary, IN	0.9176	0.9428
Grand Forks, ND–MN	0.9228	0.9465
Grand Junction, CO	0.8847	0.9195
Grand Rapids-Muskegon-Holland, MI	1.0088	1.0060
Great Falls, MT	0.9007	0.9309
Greeley, CO	0.9409	0.9591
Green Bay, WI	0.9387	0.9576
Greensboro-Winston-Salem-High Point, NC	0.9327	0.9534
Greenville-Spartanburg-Anderson, SC	0.8947	0.9266
Hartford, CT	1.2218	1.1470
Honolulu, HI	1.1487	1.0996
Houston, TX	0.9790	0.9856
Huntington-Ashland, WV–KY–OH	0.9194	0.9441
Huntsville, AL	0.8040	0.8612
Indianapolis, IN	0.9833	0.9885
Jackson, MS	0.7906	0.8514
Jacksonville, FL	0.9018	0.9317
Johnson City-Kingsport-Bristol, TN–VA	0.8921	0.9248
Joplin, MO	0.7409	0.8144
Kalamazoo-Battlecreek, MI	1.0462	1.0314
Kansas City, KS–MO	0.9522	0.9670
Knoxville, TN	0.8520	0.8961
Lafayette, LA	0.8183	0.8717
Lansing-East Lansing, MI	1.0016	1.0011
Las Vegas, NV–AZ	1.0894	1.0604
Lexington, KY	0.8387	0.8865
Lima, OH	0.8752	0.9128
Lincoln, NE	0.9059	0.9346
Little Rock-North Little Rock, AR	0.8616	0.9030
Longview-Marshall, TX	0.8495	0.8943
Los Angeles-Long Beach, CA	1.2396	1.1585

TABLE 4C.—WAGE INDEX AND CAPITAL GEOGRAPHIC ADJUSTMENT FACTOR (GAF) FOR HOSPITALS THAT ARE RECLASSIFIED—Continued

Area reclassified to	Wage index	GAF
Louisville, KY–IN	0.9445	0.9617
Macon, GA	0.8460	0.8918
Madison, WI	1.0048	1.0033
Mansfield, OH	0.8543	0.8978
Medford-Ashland, OR	1.0213	1.0145
Memphis, TN–AR–MS	0.8185	0.8718
Middlesex-Somerset-Hunterdon, NJ	1.0777	1.0526
Milwaukee-Waukesha, WI	0.9667	0.9771
Minneapolis-St. Paul, MN–WI	1.0785	1.0531
Modesto, CA	1.0135	1.0092
Monmouth-Ocean, NJ	1.0572	1.0388
Montgomery, AL	0.7949	0.8545
Nashville, TN	0.9065	0.9350
New Haven-Bridgeport-Stamford-Waterbury-Danbury, CT	1.2778	1.1828
New London-Norwich, CT	1.2345	1.1552
New Orleans, LA	0.9434	0.9609
New York, NY	1.4041	1.2616
Newark, NJ	1.0956	1.0645
Oakland, CA	1.5113	1.3268
Odessa-Midland, TX	0.8552	0.8984
Oklahoma City, OK	0.8463	0.8920
Omaha, NE–IA	0.9425	0.9603
Orange County, CA	1.1929	1.1284
Peoria-Pekin, IL	0.8923	0.9249
Philadelphia, PA–NJ	1.1197	1.0805
Pittsburgh, PA	0.9564	0.9699
Portland, ME	0.9615	0.9735
Portland-Vancouver, OR–WA	1.1267	1.0851
Provo-Orem, UT	1.0139	1.0095
Raleigh-Durham-Chapel Hill, NC	0.9615	0.9735
Rapid City, SD	0.8493	0.8942
Roanoke, VA	0.8721	0.9105
Rochester, MN	1.0452	1.0307
Rockford, IL	0.9015	0.9315
Sacramento, CA	1.2382	1.1576
Saginaw-Bay City-Midland, MI	0.9605	0.9728
St. Cloud, MN	0.9478	0.9640
St. Louis, MO–IL	0.8926	0.9251
Salt Lake City-Ogden, UT	0.9677	0.9778
San Diego, CA	1.2183	1.1448
San Francisco, CA	1.4210	1.2720
San Jose, CA	1.4435	1.2858
Santa Rosa, CA	1.2430	1.1606
Sarasota-Bradenton, FL	0.9770	0.9842
Seattle-Bellevue-Everett, WA	1.1410	1.0945
Sharon, PA	0.8764	0.9136
Sherman-Denison, TX	0.8650	0.9055
Sioux Falls, SD	0.8606	0.9023
South Bend, IN	0.9957	0.9971
Springfield, IL	0.8783	0.9150
Springfield, MO	0.7840	0.8465
Stockton-Lodi, CA	1.1417	1.0950
Syracuse, NY	0.9406	0.9589
Tacoma, WA	1.0891	1.0602
Tampa-St. Petersburg-Clearwater, FL	0.9322	0.9531

TABLE 4C.—WAGE INDEX AND CAPITAL GEOGRAPHIC ADJUSTMENT FACTOR (GAF) FOR HOSPITALS THAT ARE RECLASSIFIED—Continued

Area reclassified to	Wage index	GAF
Texarkana, AR-Texarkana, TX	0.8484	0.8935
Toledo, OH	1.0383	1.0261
Topeka, KS	0.9817	0.9874
Tucson, AZ	0.9050	0.9339
Tulsa, OK	0.8113	0.8666
Tyler, TX	0.9717	0.9805
Victoria, TX	0.8259	0.8772
Washington, DC–MD–VA–WV	1.0842	1.0569
Waterloo-Cedar Falls, IA	0.8601	0.9019
Wausau, WI	0.9720	0.9807
Wichita, KS	0.9282	0.9503
Rural Alabama	0.7160	0.7955
Rural Florida	0.8677	0.9074
Rural Kentucky	0.7772	0.8415
Rural Louisiana	0.7284	0.8049
Rural Michigan	0.8837	0.9188
Rural Minnesota	0.8161	0.8701
Rural New Hampshire	0.9776	0.9846
Rural North Carolina	0.7945	0.8542
Rural Virginia	0.7760	0.8406
Rural Washington	0.9956	0.9970
Rural West Virginia	0.7943	0.8541
Rural Wyoming	0.8202	0.8731

TABLE 4D.—AVERAGE HOURLY WAGE FOR URBAN AREAS

Urban area	Average hourly wage
Abilene, TX	15.4795
Aguadilla, PR	8.6418
Akron, OH	19.2662
Albany, GA	16.2968
Albany-Schenectady-Troy, NY	16.6016
Albuquerque, NM	18.3100
Alexandria, LA	15.8746
Allentown-Bethlehem-Easton, PA	19.5376
Altoona, PA	18.5951
Amarillo, TX	16.6936
Anchorage, AK	25.8567
Ann Arbor, MI	22.8035
Anniston, AL	15.3104
Appleton-Oshkosh-Neenah, WI	17.3835
Arecibo, PR	9.0343
Asheville, NC	18.2517
Athens, GA	18.0640
Atlanta, GA	19.6832
Atlantic-Cape May, NJ	21.6594
Augusta-Aiken, GA–SC	17.2642
Austin-San Marcos, TX	18.0500
Bakersfield, CA	19.9031
Baltimore, MD	19.1581
Bangor, ME	18.3630
Barnstable-Yarmouth, MA	26.6928
Baton Rouge, LA	16.4700
Beaumont-Port Arthur, TX	16.7355
Bellingham, WA	22.1285
Benton Harbor, MI	16.5971
Bergen-Passaic, NJ	22.8591
Billings, MT	17.3702
Biloxi-Gulfport-Pascagoula, MS	16.7252
Binghamton, NY	17.2505
Birmingham, AL	17.6503

TABLE 4D.—AVERAGE HOURLY WAGE FOR URBAN AREAS—Continued

Urban area	Average hourly wage
Bismarck, ND	15.0933
Bloomington, IN	16.8155
Bloomington-Normal, IL	17.4035
Boise City, ID	18.0695
Boston-Worcester-Lawrence-Lowell-Brockton, MA–NH	22.7069
Boulder-Longmont, CO	18.3061
Brazoria, TX	17.9908
Bremerton, WA	21.3152
Brownsville-Harlingen-San Benito, TX	16.7030
Bryan-College Station, TX	17.0898
Buffalo-Niagara Falls, NY	17.7977
Burlington, VT	17.8037
Caguas, PR	9.0488
Canton-Massillon, OH	16.9098
Casper, WY	17.2484
Cedar Rapids, IA	16.5386
Champaign-Urbana, IL	18.3634
Charleston-North Charleston, SC	17.5265
Charleston, WV	18.6261
Charlotte-Gastonia-Rock Hill, NC–SC	18.7900
Charlottesville, VA	17.9005
Chattanooga, TN–GA	17.2991
Cheyenne, WY	15.0126
Chicago, IL	20.9843
Chico-Paradise, CA	20.3689
Cincinnati, OH–KY–IN	18.4886
Clarksville-Hopkinsville, TN–KY	15.0873
Cleveland-Lorain-Elyria, OH	19.3306
Colorado Springs, CO	18.4479
Columbia, MO	17.4002
Columbia, SC	17.9066
Columbus, GA–AL	14.9336
Columbus, OH	18.9232
Corpus Christi, TX	16.8587
Cumberland, MD–WV	16.8031
Dallas, TX	18.5928
Danville, VA	16.6152
Davenport-Moline-Rock Island, IA–IL	16.4021
Dayton-Springfield, OH	18.6930
Daytona Beach, FL	17.3459
Decatur, AL	16.3934
Decatur, IL	15.3452
Denver, CO	20.0780
Des Moines, IA	17.1139
Detroit, MI	20.9694
Dothan, AL	15.1351
Dover, DE	17.5916
Dubuque, IA	15.8987
Duluth-Superior, MN–WI	18.4105
Dutchess County, NY	20.6881
Eau Claire, WI	16.9692
El Paso, TX	18.5059
Elkhart-Goshen, IN	17.2083
Elmira, NY	16.4576
Enid, OK	15.3724
Erie, PA	17.8263
Eugene-Springfield, OR	22.0384
Evansville, Henderson, IN–KY	17.5397
Fargo-Moorhead, ND–MN	17.5775
Fayetteville, NC	17.6077
Fayetteville-Springdale-Rogers, AR	14.1177
Flagstaff, AZ–UT	17.6344
Flint, MI	21.9933
Florence, AL	15.5886

TABLE 4D.—AVERAGE HOURLY WAGE FOR URBAN AREAS—Continued

Urban area	Average hourly wage
Florence, SC	16.8047
Fort Collins-Loveland, CO	20.7345
Fort Lauderdale, FL	20.5796
Fort Myers-Cape Coral, FL	17.7400
Fort Pierce-Port St. Lucie, FL	19.8836
Fort Smith, AR–OK	15.3772
Fort Walton Beach, FL	17.9217
Fort Wayne, IN	17.2046
Fort Worth-Arlington, TX	19.6953
Fresno, CA	21.8549
Gadsden, AL	17.3656
Gainesville, FL	18.4465
Galveston-Texas City, TX	21.5032
Gary, IN	18.8135
Glens Falls, NY	16.6999
Goldsboro, NC	16.4109
Grand Forks, ND–MN	17.6200
Grand Junction, CO	16.2899
Grand Rapids-Muskegon-Holland, MI	19.6810
Great Falls, MT	16.9748
Greeley, CO	18.9481
Green Bay, WI	17.6730
Greensboro-Winston-Salem-High Point, NC	18.1974
Greenville, NC	17.7503
Greenville-Spartanburg-Anderson, SC	17.4547
Hagerstown, MD	17.9394
Hamilton-Middletown, OH	18.5631
Harrisburg-Lebanon-Carlisle, PA	19.8630
Hartford, CT	24.1823
Hattiesburg, MS	14.1809
Hickory-Morganton-Lenoir, NC	16.8672
Honolulu, HI	22.4099
Houma, LA	15.3009
Houston, TX	19.1004
Huntington-Ashland, WV–KY–OH	17.9378
Huntsville, AL	15.8903
Indianapolis, IN	19.4109
Iowa City, IA	18.3037
Jackson, MI	17.6864
Jackson, MS	15.3259
Jackson, TN	16.2704
Jacksonville, FL	17.5917
Jacksonville, NC	13.7955
Jamestown, NY	14.9815
Janesville-Beloit, WI	16.9030
Jersey City, NJ	22.2562
Johnson City-Kingsport-Bristol, TN–VA	17.3717
Johnstown, PA	16.4213
Joplin, MO	14.3989
Kalamazoo-Battlecreek, MI	20.6127
Kankakee, IL	17.5542
Kansas City, KS–MO	18.5772
Kenosha, WI	17.8819
Killeen-Temple, TX	20.3189
Knoxville, TN	16.6222
Kokomo, IN	16.7962
La Crosse, WI–MN	16.8513
Lafayette, LA	15.9607
Lafayette, IN	17.1635
Lake Charles, LA	15.7084
Lakeland-Winter Haven, FL	17.1559
Lancaster, PA	18.7384
Lansing-East Lansing, MI	19.5408
Laredo, TX	13.8360
Las Cruces, NM	16.6145

TABLE 4D.—AVERAGE HOURLY WAGE FOR URBAN AREAS—Continued

Urban area	Average hourly wage
Las Vegas, NV–AZ	21.2545
Lawrence, KS	16.8098
Lawton, OK	16.2681
Lewiston-Auburn, ME	18.3998
Lexington, KY	16.3501
Lima, OH	17.0746
Lincoln, NE	17.9352
Little Rock-North Little Rock, AR	16.8095
Longview-Marshall, TX	16.8433
Los Angeles-Long Beach, CA	24.1067
Louisville, KY–IN	18.4271
Lubbock, TX	16.6316
Lynchburg, VA	15.6776
Macon, GA	17.2388
Madison, WI	19.6027
Mansfield, OH	16.6677
Mayaguez, PR	8.1673
McAllen-Edinburg-Mission, TX	16.5870
Medford-Ashland, OR	19.6857
Melbourne-Titusville-Palm Bay, FL	17.7314
Memphis, TN–AR–MS	15.9681
Merced, CA	20.8439
Miami, FL	19.3734
Middlesex-Somerset-Hunterdon, NJ	21.0732
Milwaukee-Waukesha, WI	18.8591
Minneapolis-St. Paul, MN–WI	21.0411
Mobile, AL	15.6052
Modesto, CA	20.7262
Monmouth-Ocean, NJ	21.1523
Monroe, LA	16.0633
Montgomery, AL	15.5087
Muncie, IN	18.9936
Myrtle Beach, SC	15.2138
Naples, FL	19.9423
Nashville, TN	17.6844
Nassau-Suffolk, NY	26.4295
New Haven-Bridgeport-Stamford-Waterbury-Danbury, CT	24.8405
New London-Norwich, CT	23.9754
New Orleans, LA	18.4047
New York, NY	27.3928
Newark, NJ	22.9650
Newburgh, NY–PA	21.1274
Norfolk-Virginia Beach-Newport News, VA–NC	16.2433
Oakland, CA	29.3295
Ocala, FL	17.5573
Odessa-Midland, TX	16.5854
Oklahoma City, OK	16.5112
Olympia, WA	20.9003
Omaha, NE–IA	18.3867
Orange County, CA	23.3969
Orlando, FL	18.5157
Owensboro, KY	14.7838
Panama City, FL	15.7629
Parkersburg-Marietta, WV–OH	15.4018
Pensacola, FL	16.0203
Peoria-Pekin, IL	17.4092
Philadelphia, PA–NJ	21.8450
Phoenix-Mesa, AZ	19.1821
Pine Bluff, AR	15.4205
Pittsburgh, PA	18.9757
Pittsfield, MA	20.6216
Ponce, PR	8.7784
Portland, ME	18.7580
Portland-Vancouver, OR–WA	21.9821
Providence-Warwick, RI	21.6876
Provo-Orem, UT	19.7809

TABLE 4D.—AVERAGE HOURLY WAGE FOR URBAN AREAS—Continued

Urban area	Average hourly wage
Pueblo, CO	16.1970
Punta Gorda, FL	16.1612
Racine, WI	17.2751
Raleigh-Durham-Chapel Hill, NC	19.0031
Rapid City, SD	16.5325
Reading, PA	18.4690
Redding, CA	22.6922
Reno, NV	21.5443
Richland-Kennewick-Pasco, WA	19.4956
Richmond-Petersburg, VA	17.9271
Riverside-San Bernardino, CA	22.2324
Roanoke, VA	17.0151
Rochester, MN	20.3908
Rochester, NY	18.7505
Rockford, IL	17.5872
Rocky Mount, NC	17.4626
Sacramento, CA	24.1558
Saginaw-Bay City-Midland, MI	18.5818
St. Cloud, MN	18.4907
St. Joseph, MO	16.7196
St. Louis, MO–IL	17.4144
Salem, OR	19.0205
Salinas, CA	26.9904
Salt Lake City-Ogden, UT	18.8799
San Angelo, TX	14.8158
San Antonio, TX	16.3206
San Diego, CA	23.7299
San Francisco, CA	27.8220
San Jose, CA	28.2911
San Juan-Bayamon, PR	9.0059
San Luis Obispo-Atascadero-Paso Robles, CA	22.6053
Santa Barbara-Santa Maria-Lompoc, CA	21.9816
Santa Cruz-Watsonville, CA	26.4364
Santa Fe, NM	21.1622
Santa Rosa, CA	24.4999
Sarasota-Bradenton, FL	19.0607
Savannah, GA	19.6834
Scranton-Wilkes Barre-Hazleton, PA	17.1047
Seattle-Bellevue-Everett, WA	22.2595
Sharon, PA	17.0979
Sheboygan, WI	15.1817
Sherman-Denison, TX	16.8423
Shreveport-Bossier City, LA	18.2987
Sioux City, IA–NE	16.2539
Sioux Falls, SD	16.7892
South Bend, IN	19.4248
Spokane, WA	20.5788
Springfield, IL	17.1355
Springfield, MO	15.2957
Springfield, MA	20.6983
State College, PA	17.3139
Steubenville-Weirton, OH–WV	16.0839
Stockton-Lodi, CA	22.1532
Sumter, SC	15.0540
Syracuse, NY	18.3462
Tacoma, WA	21.2353
Tallahassee, FL	16.2555
Tampa-St. Petersburg-Clearwater, FL	18.0837
Terre Haute, IN	16.7989
Texarkana, AR-Texarkana, TX	16.5261
Toledo, OH	20.2562
Topeka, KS	19.7210
Trenton, NJ	20.6250
Tucson, AZ	17.6383
Tulsa, OK	15.8281

TABLE 4D.—AVERAGE HOURLY WAGE FOR URBAN AREAS—Continued

Urban area	Average hourly wage
Tuscaloosa, AL	15.0679
Tyler, TX	19.8177
Utica-Rome, NY	16.4296
Vallejo-Fairfield-Napa, CA	27.2883
Ventura, CA	22.5369
Victoria, TX	16.5405
Vineland-Millville-Bridgeton, NJ	19.5394
Visalia-Tulare-Porterville, CA	19.8483
Waco, TX	15.1959
Washington, DC–MD–VA–WV	21.1518
Waterloo-Cedar Falls, IA	17.0208
Wausau, WI	20.1856
West Palm Beach-Boca Raton, FL	19.9482
Wheeling, OH–WV	14.7877
Wichita, KS	18.4305
Wichita Falls, TX	15.7442
Williamsport, PA	16.5567
Wilmington-Newark, DE–MD	22.1249
Wilmington, NC	17.6987
Yakima, WA	19.6049
Yolo, CA	22.3769
York, PA	17.8006
Youngstown-Warren, OH	19.0484
Yuba City, CA	20.3622
Yuma, AZ	18.5693

TABLE 4E.—AVERAGE HOURLY WAGE FOR RURAL AREAS

Nonurban area	Average hourly wage
Alabama	13.9126
Alaska	24.3314
Arizona	15.5017
Arkansas	13.6566
California	19.4927
Colorado	15.9126
Connecticut	24.9480
Delaware	18.4636
Florida	16.9290
Georgia	14.9414
Hawaii	20.0330
Idaho	16.3016
Illinois	14.7630
Indiana	15.8402
Iowa	14.4246
Kansas	13.8771
Kentucky	15.1633
Louisiana	14.1714
Maine	16.2618
Maryland	16.4778
Massachusetts	21.0582
Michigan	17.2254
Minnesota	15.9225
Mississippi	13.2817
Missouri	14.1433
Montana	15.8750
Nebraska	14.1342
Nevada	17.1588
New Hampshire	19.0608
New Jersey [1]	.....
New Mexico	15.3596
New York	16.7103
North Carolina	15.4962
North Dakota	14.3775
Ohio	16.2883

TABLE 4E.—AVERAGE HOURLY WAGE FOR RURAL AREAS—Continued

Nonurban area	Average hourly wage
Oklahoma	13.5853
Oregon	18.9527
Pennsylvania	16.5230
Puerto Rico	8.1591
Rhode Island [1]	
South Carolina	14.9812

TABLE 4E.—AVERAGE HOURLY WAGE FOR RURAL AREAS—Continued

Nonurban area	Average hourly wage
South Dakota	13.8219
Tennessee	14.3822
Texas	14.4957
Utah	17.2737
Vermont	17.4440
Virginia	15.1073

TABLE 4E.—AVERAGE HOURLY WAGE FOR RURAL AREAS—Continued

Nonurban area	Average hourly wage
Washington	19.4229
West Virginia	15.4577
Wisconsin	16.4842
Wyoming	16.0015

[1] All counties within the State are classified as urban.

TABLE 5.—LIST OF DIAGNOSIS RELATED GROUPS (DRGS), RELATIVE WEIGHTING FACTORS, GEOMETRIC MEAN LENGTH OF STAY, AND LENGTH OF STAY OUTLIER CUTOFF POINTS USED IN THE PROSPECTIVE PAYMENT SYSTEM

				Relative weights	Geometric mean LOS	Arithmetic mean LOS	Outlier threshold
1	01	SURG	CRANIOTOMY AGE >17 EXCEPT FOR TRAUMA	3.0445	7.7	11.1	32
2	01	SURG	CRANIOTOMY FOR TRAUMA AGE >17	3.0241	8.4	11.5	32
3	01	SURG	*CRANIOTOMY AGE 0–17	1.9159	12.7	12.7	37
4	01	SURG	SPINAL PROCEDURES	2.3330	5.9	9.1	30
5	01	SURG	EXTRACRANIAL VASCULAR PROCEDURES	1.5149	3.3	4.4	26
6	01	SURG	CARPAL TUNNEL RELEASE	.7359	2.4	3.4	25
7	01	SURG	PERIPH & CRANIAL NERVE & OTHER NERV SYST PROC W CC.	2.4935	8.2	12.6	32
8	01	SURG	PERIPH & CRANIAL NERVE & OTHER NERV SYST PROC W/O CC.	1.1419	2.8	4.1	27
9	01	MED	SPINAL DISORDERS & INJURIES	1.2522	5.4	7.7	29
10	01	MED	NERVOUS SYSTEM NEOPLASMS W CC	1.2209	5.7	8.1	30
11	01	MED	NERVOUS SYSTEM NEOPLASMS W/O CC	.8020	3.5	5.0	28
12	01	MED	DEGENERATIVE NERVOUS SYSTEM DISORDERS	.9435	5.4	7.6	29
13	01	MED	MULTIPLE SCLEROSIS & CEREBELLAR ATAXIA	.7799	5.0	6.3	29
14	01	MED	SPECIFIC CEREBROVASCULAR DISORDERS EXCEPT TIA.	1.2003	5.5	7.5	30
15	01	MED	TRANSIENT ISCHEMIC ATTACK & PRECEREBRAL OCCLUSIONS.	.7232	3.5	4.4	27
16	01	MED	NONSPECIFIC CEREBROVASCULAR DISORDERS W CC	1.0390	4.9	6.6	29
17	01	MED	NONSPECIFIC CEREBROVASCULAR DISORDERS W/O CC.	.6308	3.0	4.0	26
18	01	MED	CRANIAL & PERIPHERAL NERVE DISORDERS W CC	.9345	4.8	6.4	29
19	01	MED	CRANIAL & PERIPHERAL NERVE DISORDERS W/O CC	.6258	3.4	4.5	27
20	01	MED	NERVOUS SYSTEM INFECTION EXCEPT VIRAL MENINGITIS.	2.4782	8.5	11.5	33
21	01	MED	VIRAL MENINGITIS	1.4972	5.8	7.9	30
22	01	MED	HYPERTENSIVE ENCEPHALOPATHY	.8356	3.8	4.9	28
23	01	MED	NONTRAUMATIC STUPOR & COMA	.8053	3.6	5.1	28
24	01	MED	SEIZURE & HEADACHE AGE >17 W CC	.9707	4.2	5.8	28
25	01	MED	SEIZURE & HEADACHE AGE >17 W/O CC	.5791	3.0	3.9	24
26	01	MED	SEIZURE & HEADACHE AGE 0–17	.7381	3.3	4.6	27
27	01	MED	TRAUMATIC STUPOR & COMA, COMA >1 HR	1.3186	3.7	6.3	28
28	01	MED	TRAUMATIC STUPOR & COMA, COMA <1 HR AGE >17 W CC.	1.2075	4.8	7.2	29
29	01	MED	TRAUMATIC STUPOR & COMA, COMA <1 HR AGE >17 W/O CC.	.6382	3.0	4.1	27
30	01	MED	*TRAUMATIC STUPOR & COMA, COMA <1 HR AGE 0–17	.3240	2.0	2.0	17
31	01	MED	CONCUSSION AGE >17 W CC	.8367	3.7	5.4	28
32	01	MED	CONCUSSION AGE >17 W/O CC	.4887	2.3	3.2	21
33	01	MED	*CONCUSSION AGE 0–17	.2036	1.6	1.6	9
34	01	MED	OTHER DISORDERS OF NERVOUS SYSTEM W CC	1.0639	4.6	6.5	29
35	01	MED	OTHER DISORDERS OF NERVOUS SYSTEM W/O CC	.6112	3.2	4.3	27
36	02	SURG	RETINAL PROCEDURES	.6156	1.3	1.6	6
37	02	SURG	ORBITAL PROCEDURES	.9280	2.7	4.0	27
38	02	SURG	PRIMARY IRIS PROCEDURES	.4217	1.8	2.5	16
39	02	SURG	LENS PROCEDURES WITH OR WITHOUT VITRECTOMY	.5162	1.5	2.0	10
40	02	SURG	EXTRAOCULAR PROCEDURES EXCEPT ORBIT AGE >17.	.7094	2.2	3.4	26
41	02	SURG	*EXTRAOCULAR PROCEDURES EXCEPT ORBIT AGE 0–17.	.3298	1.6	1.6	7
42	02	SURG	INTRAOCULAR PROCEDURES EXCEPT RETINA, IRIS & LENS.	.5821	1.6	2.2	13
43	02	MED	HYPHEMA	.4448	3.2	4.1	27

TABLE 5.—LIST OF DIAGNOSIS RELATED GROUPS (DRGS), RELATIVE WEIGHTING FACTORS, GEOMETRIC MEAN LENGTH OF STAY, AND LENGTH OF STAY OUTLIER CUTOFF POINTS USED IN THE PROSPECTIVE PAYMENT SYSTEM—Continued

				Relative weights	Geometric mean LOS	Arithmetic mean LOS	Outlier threshold
44	02	MED	ACUTE MAJOR EYE INFECTIONS	.6234	4.7	5.7	29
45	02	MED	NEUROLOGICAL EYE DISORDERS	.6514	3.1	3.8	22
46	02	MED	OTHER DISORDERS OF THE EYE AGE >17 W CC	.7595	4.0	5.5	28
47	02	MED	OTHER DISORDERS OF THE EYE AGE >17 W/O CC	.4703	2.8	3.8	27
48	02	MED	*OTHER DISORDERS OF THE EYE AGE 0–17	.2906	2.9	2.9	27
49	03	SURG	MAJOR HEAD & NECK PROCEDURES	1.7253	4.1	5.6	28
50	03	SURG	SIALOADENECTOMY	.7677	1.7	2.1	9
51	03	SURG	SALIVARY GLAND PROCEDURES EXCEPT SIALOADENECTOMY.	.7358	1.9	3.0	21
52	03	SURG	CLEFT LIP & PALATE REPAIR	1.0971	2.1	3.6	26
53	03	SURG	SINUS & MASTOID PROCEDURES AGE >17	1.0116	2.2	3.6	26
54	03	SURG	*SINUS & MASTOID PROCEDURES AGE 0–17	.4711	3.2	3.2	22
55	03	SURG	MISCELLANEOUS EAR, NOSE, MOUTH & THROAT PROCEDURES.	.7844	1.9	3.0	22
56	03	SURG	RHINOPLASTY	.8247	2.1	2.8	18
57	03	SURG	T&A PROC, EXCEPT TONSILLECTOMY &/OR ADENOIDECTOMY ONLY, AGE >17.	.9413	2.7	4.1	27
58	03	SURG	*T&A PROC, EXCEPT TONSILLECTOMY &/OR ADENOIDECTOMY ONLY, AGE 0–17.	.2674	1.5	1.5	4
59	03	SURG	TONSILLECTOMY &/OR ADENOIDECTOMY ONLY, AGE >17.	.7521	2.3	3.7	26
60	03	SURG	*TONSILLECTOMY &/OR ADENOIDECTOMY ONLY, AGE 0–17.	.2037	1.5	1.5	4
61	03	SURG	MYRINGOTOMY W TUBE INSERTION AGE >17	1.2155	2.7	5.3	27
62	03	SURG	*MYRINGOTOMY W TUBE INSERTION AGE 0–17	.2884	1.3	1.3	5
63	03	SURG	OTHER EAR, NOSE, MOUTH & THROAT O.R. PROCEDURES.	1.2217	3.2	4.7	27
64	03	MED	EAR, NOSE, MOUTH & THROAT MALIGNANCY	1.1699	4.7	7.5	29
65	03	MED	DYSEQUILIBRIUM	.5192	2.7	3.4	20
66	03	MED	EPISTAXIS	.5358	2.9	3.6	21
67	03	MED	EPIGLOTTITIS	.8452	3.4	4.2	24
68	03	MED	OTITIS MEDIA & URI AGE >17 W CC	.7075	3.8	4.8	27
69	03	MED	OTITIS MEDIA & URI AGE >17 W/O CC	.5244	3.1	3.8	20
70	03	MED	OTITIS MEDIA & URI AGE 0–17	.3839	2.6	3.1	15
71	03	MED	LARYNGOTRACHEITIS	.7959	3.1	4.2	27
72	03	MED	NASAL TRAUMA & DEFORMITY	.6466	3.1	4.4	27
73	03	MED	OTHER EAR, NOSE, MOUTH & THROAT DIAGNOSES AGE >17.	.7483	3.7	5.0	28
74	03	MED	*OTHER EAR, NOSE, MOUTH & THROAT DIAGNOSES AGE 0–17.	.3276	2.1	2.1	20
75	04	SURG	MAJOR CHEST PROCEDURES	3.1904	8.8	11.1	33
76	04	SURG	OTHER RESP SYSTEM O.R. PROCEDURES W CC	2.6018	9.1	12.5	33
77	04	SURG	OTHER RESP SYSTEM O.R. PROCEDURES W/O CC	1.1577	3.8	5.5	28
78	04	MED	PULMONARY EMBOLISM	1.4291	7.0	8.3	31
79	04	MED	RESPIRATORY INFECTIONS & INFLAMMATIONS AGE >17 W CC.	1.6310	7.2	9.3	31
80	04	MED	RESPIRATORY INFECTIONS & INFLAMMATIONS AGE >17 W/O CC.	.9481	5.4	6.6	29
81	04	MED	*RESPIRATORY INFECTIONS & INFLAMMATIONS AGE 0–17.	.9716	6.1	6.1	30
82	04	MED	RESPIRATORY NEOPLASMS	1.3347	5.7	7.9	30
83	04	MED	MAJOR CHEST TRAUMA W CC	.9738	4.9	6.4	29
84	04	MED	MAJOR CHEST TRAUMA W/O CC	.5335	2.9	3.7	24
85	04	MED	PLEURAL EFFUSION W CC	1.2229	5.6	7.4	30
86	04	MED	PLEURAL EFFUSION W/O CC	.7175	3.4	4.5	27
87	04	MED	PULMONARY EDEMA & RESPIRATORY FAILURE	1.3587	5.1	6.8	29
88	04	MED	CHRONIC OBSTRUCTIVE PULMONARY DISEASE	.9831	4.9	6.1	29
89	04	MED	SIMPLE PNEUMONIA & PLEURISY AGE >17 W CC	1.1158	5.8	7.1	30
90	04	MED	SIMPLE PNEUMONIA & PLEURISY AGE >17 W/O CC	.6995	4.3	5.1	24
91	04	MED	SIMPLE PNEUMONIA & PLEURISY AGE 0–17	.7883	3.7	4.7	28
92	04	MED	INTERSTITIAL LUNG DISEASE W CC	1.2053	5.6	7.3	30
93	04	MED	INTERSTITIAL LUNG DISEASE W/O CC	.7551	4.0	5.0	28
94	04	MED	PNEUMOTHORAX W CC	1.1764	5.3	7.1	29
95	04	MED	PNEUMOTHORAX W/O CC	.6035	3.3	4.1	25
96	04	MED	BRONCHITIS & ASTHMA AGE >17 W CC	.8254	4.5	5.5	29
97	04	MED	BRONCHITIS & ASTHMA AGE >17 W/O CC	.6013	3.6	4.3	22
98	04	MED	BRONCHITIS & ASTHMA AGE 0–17	.8036	3.1	4.5	27
99	04	MED	RESPIRATORY SIGNS & SYMPTOMS W CC	.6868	2.7	3.5	22
100	04	MED	RESPIRATORY SIGNS & SYMPTOMS W/O CC	.5126	2.0	2.4	12
101	04	MED	OTHER RESPIRATORY SYSTEM DIAGNOSES W CC	.8735	3.8	5.2	28

TABLE 5.—LIST OF DIAGNOSIS RELATED GROUPS (DRGS), RELATIVE WEIGHTING FACTORS, GEOMETRIC MEAN LENGTH OF STAY, AND LENGTH OF STAY OUTLIER CUTOFF POINTS USED IN THE PROSPECTIVE PAYMENT SYSTEM—Continued

				Relative weights	Geometric mean LOS	Arithmetic mean LOS	Outlier threshold
102 ...	04	MED	OTHER RESPIRATORY SYSTEM DIAGNOSES W/O CC ...	.5330	2.4	3.1	20
103 ...	05	SURG	HEART TRANSPLANT	15.2952	28.1	39.4	52
104 ...	05	SURG	CARDIAC VALVE PROCEDURES W CARDIAC CATH	7.3389	12.0	14.6	36
105 ...	05	SURG	CARDIAC VALVE PROCEDURES W/O CARDIAC CATH ...	5.6012	9.0	10.9	33
106 ...	05	SURG	CORONARY BYPASS W CARDIAC CATH	5.5599	10.3	11.7	34
107 ...	05	SURG	CORONARY BYPASS W/O CARDIAC CATH	4.0741	7.8	8.8	32
108 ...	05	SURG	OTHER CARDIOTHORACIC PROCEDURES	5.9226	9.8	12.6	34
109 ...	.....		NO LONGER VALID	.0000	.0	.0	0
110 ...	05	SURG	MAJOR CARDIOVASCULAR PROCEDURES W CC	4.1674	8.2	10.9	32
111 ...	05	SURG	MAJOR CARDIOVASCULAR PROCEDURES W/O CC	2.2863	5.9	6.7	30
112 ...	05	SURG	PERCUTANEOUS CARDIOVASCULAR PROCEDURES	2.0962	3.5	4.7	27
113 ...	05	SURG	AMPUTATION FOR CIRC SYSTEM DISORDERS EXCEPT UPPER LIMB & TOE.	2.6919	10.6	14.4	35
114 ...	05	SURG	UPPER LIMB & TOE AMPUTATION FOR CIRC SYSTEM DISORDERS.	1.5122	6.8	9.5	31
115 ...	05	SURG	PERM CARDIAC PACEMAKER IMPLANT W AMI, HEART FAILURE OR SHOCK.	3.6844	9.1	11.4	33
116 ...	05	SURG	OTH PERM CARDIAC PACEMAKER IMPLANT OR AICD LEAD OR GENERATOR PROC.	2.4158	3.9	5.4	28
117 ...	05	SURG	CARDIAC PACEMAKER REVISION EXCEPT DEVICE REPLACEMENT.	1.1774	2.7	4.1	27
118 ...	05	SURG	CARDIAC PACEMAKER DEVICE REPLACEMENT	1.5782	2.1	3.2	25
119 ...	05	SURG	VEIN LIGATION & STRIPPING	1.1378	3.3	5.5	27
120 ...	05	SURG	OTHER CIRCULATORY SYSTEM O.R. PROCEDURES	1.9321	5.4	9.2	29
121 ...	05	MED	CIRCULATORY DISORDERS W AMI & C.V. COMP DISCH ALIVE.	1.6473	6.4	7.8	30
122 ...	05	MED	CIRCULATORY DISORDERS W AMI W/O C.V. COMP DISCH ALIVE.	1.1617	4.4	5.3	28
123 ...	05	MED	CIRCULATORY DISORDERS W AMI, EXPIRED	1.4519	2.7	4.7	27
124 ...	05	MED	CIRCULATORY DISORDERS EXCEPT AMI, W CARD CATH & COMPLEX DIAG.	1.3264	3.8	5.0	28
125 ...	05	MED	CIRCULATORY DISORDERS EXCEPT AMI, W CARD CATH W/O COMPLEX DIAG.	.9259	2.3	3.1	20
126 ...	05	MED	ACUTE & SUBACUTE ENDOCARDITIS	2.5380	11.0	14.3	35
127 ...	05	MED	HEART FAILURE & SHOCK	1.0268	4.8	6.2	29
128 ...	05	MED	DEEP VEIN THROMBOPHLEBITIS	.7861	5.9	6.7	27
129 ...	05	MED	CARDIAC ARREST, UNEXPLAINED	1.1239	2.0	3.4	26
130 ...	05	MED	PERIPHERAL VASCULAR DISORDERS W CC	.9357	5.3	6.7	29
131 ...	05	MED	PERIPHERAL VASCULAR DISORDERS W/O CC	.6045	4.3	5.2	28
132 ...	05	MED	ATHEROSCLEROSIS W CC	.6834	2.9	3.6	20
133 ...	05	MED	ATHEROSCLEROSIS W/O CC	.5543	2.3	2.9	16
134 ...	05	MED	HYPERTENSION	.5799	3.0	3.9	23
135 ...	05	MED	CARDIAC CONGENITAL & VALVULAR DISORDERS AGE >17 W CC.	.8797	3.7	5.0	28
136 ...	05	MED	CARDIAC CONGENITAL & VALVULAR DISORDERS AGE >17 W/O CC.	.5597	2.6	3.2	18
137 ...	05	MED	*CARDIAC CONGENITAL & VALVULAR DISORDERS AGE 0–17.	.7996	3.3	3.3	27
138 ...	05	MED	CARDIAC ARRHYTHMIA & CONDUCTION DISORDERS W CC.	.8009	3.5	4.6	27
139 ...	05	MED	CARDIAC ARRHYTHMIA & CONDUCTION DISORDERS W/O CC.	.4975	2.4	2.9	16
140 ...	05	MED	ANGINA PECTORIS	.6210	2.8	3.5	20
141 ...	05	MED	SYNCOPE & COLLAPSE W CC	.7129	3.4	4.5	27
142 ...	05	MED	SYNCOPE & COLLAPSE W/O CC	.5289	2.5	3.2	18
143 ...	05	MED	CHEST PAIN	.5233	2.1	2.6	14
144 ...	05	MED	OTHER CIRCULATORY SYSTEM DIAGNOSES W CC	1.0850	4.1	5.7	28
145 ...	05	MED	OTHER CIRCULATORY SYSTEM DIAGNOSES W/O CC ...	.6217	2.5	3.3	20
146 ...	06	SURG	RECTAL RESECTION W CC	2.6401	9.8	11.3	34
147 ...	06	SURG	RECTAL RESECTION W/O CC	1.6115	6.7	7.4	27
148 ...	06	SURG	MAJOR SMALL & LARGE BOWEL PROCEDURES W CC	3.3693	11.2	13.4	35
149 ...	06	SURG	MAJOR SMALL & LARGE BOWEL PROCEDURES W/O CC.	1.6038	7.1	7.7	25
150 ...	06	SURG	PERITONEAL ADHESIOLYSIS W CC	2.6786	9.5	11.7	34
151 ...	06	SURG	PERITONEAL ADHESIOLYSIS W/O CC	1.2959	5.2	6.5	29
152 ...	06	SURG	MINOR SMALL & LARGE BOWEL PROCEDURES W CC	1.9381	7.6	9.0	32
153 ...	06	SURG	MINOR SMALL & LARGE BOWEL PROCEDURES W/O CC.	1.1550	5.6	6.2	24
154 ...	06	SURG	STOMACH, ESOPHAGEAL & DUODENAL PROCEDURES AGE >17 W CC.	4.1880	11.6	15.0	36

TABLE 5.—LIST OF DIAGNOSIS RELATED GROUPS (DRGS), RELATIVE WEIGHTING FACTORS, GEOMETRIC MEAN LENGTH OF STAY, AND LENGTH OF STAY OUTLIER CUTOFF POINTS USED IN THE PROSPECTIVE PAYMENT SYSTEM—Continued

				Relative weights	Geometric mean LOS	Arithmetic mean LOS	Outlier threshold
155 ...	06	SURG	STOMACH, ESOPHAGEAL & DUODENAL PROCEDURES AGE >17 W/O CC.	1.4070	4.6	5.9	29
156 ...	06	SURG	*STOMACH, ESOPHAGEAL & DUODENAL PROCEDURES AGE 0–17.	.8235	6.0	6.0	30
157 ...	06	SURG	ANAL & STOMAL PROCEDURES W CC	1.1331	4.2	5.8	28
158 ...	06	SURG	ANAL & STOMAL PROCEDURES W/O CC	.6106	2.3	2.9	18
159 ...	06	SURG	HERNIA PROCEDURES EXCEPT INGUINAL & FEMORAL AGE >17 W CC.	1.2263	4.0	5.3	28
160 ...	06	SURG	HERNIA PROCEDURES EXCEPT INGUINAL & FEMORAL AGE >17 W/O CC.	.7032	2.4	3.0	16
161 ...	06	SURG	INGUINAL & FEMORAL HERNIA PROCEDURES AGE >17 W CC.	1.0089	3.0	4.4	27
162 ...	06	SURG	INGUINAL & FEMORAL HERNIA PROCEDURES AGE >17 W/O CC.	.5710	1.7	2.2	11
163 ...	06	SURG	*HERNIA PROCEDURES AGE 0–17	.7703	2.1	2.1	11
164 ...	06	SURG	APPENDECTOMY W COMPLICATED PRINCIPAL DIAG W CC.	2.3299	8.0	9.3	32
165 ...	06	SURG	APPENDECTOMY W COMPLICATED PRINCIPAL DIAG W/O CC.	1.2576	5.1	5.8	25
166 ...	06	SURG	APPENDECTOMY W/O COMPLICATED PRINCIPAL DIAG W CC.	1.4512	4.5	5.7	29
167 ...	06	SURG	APPENDECTOMY W/O COMPLICATED PRINCIPAL DIAG W/O CC.	.8496	2.8	3.2	15
168 ...	03	SURG	MOUTH PROCEDURES W CC	1.0951	3.2	4.9	27
169 ...	03	SURG	MOUTH PROCEDURES W/O CC	.6828	2.0	2.6	15
170 ...	06	SURG	OTHER DIGESTIVE SYSTEM O.R. PROCEDURES W CC	2.7448	8.5	12.5	33
171 ...	06	SURG	OTHER DIGESTIVE SYSTEM O.R. PROCEDURES W/O CC.	1.1297	4.0	5.4	28
172 ...	06	MED	DIGESTIVE MALIGNANCY W CC	1.2934	5.7	8.2	30
173 ...	06	MED	DIGESTIVE MALIGNANCY W/O CC	.6736	3.0	4.3	27
174 ...	06	MED	G.I. HEMORRHAGE W CC	.9962	4.4	5.6	28
175 ...	06	MED	G.I. HEMORRHAGE W/O CC	.5492	2.9	3.5	17
176 ...	06	MED	COMPLICATED PEPTIC ULCER	1.0874	4.7	6.2	29
177 ...	06	MED	UNCOMPLICATED PEPTIC ULCER W CC	.8353	4.0	5.0	28
178 ...	06	MED	UNCOMPLICATED PEPTIC ULCER W/O CC	.6122	3.0	3.6	19
179 ...	06	MED	INFLAMMATORY BOWEL DISEASE	1.1219	5.5	7.2	30
180 ...	06	MED	G.I. OBSTRUCTION W CC	.9202	4.7	6.1	29
181 ...	06	MED	G.I. OBSTRUCTION W/O CC	.5346	3.3	4.0	22
182 ...	06	MED	ESOPHAGITIS, GASTROENT & MISC DIGEST DISORDERS AGE >17 W CC.	.7791	3.8	5.0	28
183 ...	06	MED	ESOPHAGITIS, GASTROENT & MISC DIGEST DISORDERS AGE >17 W/O CC.	.5570	2.8	3.5	20
184 ...	06	MED	ESOPHAGITIS, GASTROENT & MISC DIGEST DISORDERS AGE 0–17.	.5366	2.7	3.8	26
185 ...	03	MED	DENTAL & ORAL DIS EXCEPT EXTRACTIONS & RESTORATIONS, AGE >17.	.8467	3.7	5.2	28
186 ...	03	MED	*DENTAL & ORAL DIS EXCEPT EXTRACTIONS & RESTORATIONS, AGE 0–17.	.3139	2.9	2.9	23
187 ...	03	MED	DENTAL EXTRACTIONS & RESTORATIONS	.7211	3.1	4.3	27
188 ...	06	MED	OTHER DIGESTIVE SYSTEM DIAGNOSES AGE >17 W CC.	1.0593	4.5	6.1	28
189 ...	06	MED	OTHER DIGESTIVE SYSTEM DIAGNOSES AGE >17 W/O CC.	.5629	2.7	3.7	27
190 ...	06	MED	OTHER DIGESTIVE SYSTEM DIAGNOSES AGE 0–17	.8364	3.9	4.9	28
191 ...	07	SURG	PANCREAS, LIVER & SHUNT PROCEDURES W CC	4.4227	12.0	16.2	36
192 ...	07	SURG	PANCREAS, LIVER & SHUNT PROCEDURES W/O CC	1.8016	6.2	8.0	30
193 ...	07	SURG	BILIARY TRACT PROC EXCEPT ONLY CHOLECYST W OR W/O C.D.E. W CC.	3.2582	11.4	13.9	35
194 ...	07	SURG	BILIARY TRACT PROC EXCEPT ONLY CHOLECYST W OR W/O C.D.E. W/O CC.	1.7596	6.8	8.4	31
195 ...	07	SURG	CHOLECYSTECTOMY W C.D.E. W CC	2.6806	8.8	10.5	33
196 ...	07	SURG	CHOLECYSTECTOMY W C.D.E. W/O CC	1.6252	5.9	6.8	30
197 ...	07	SURG	CHOLECYSTECTOMY EXCEPT BY LAPAROSCOPE W/O C.D.E. W CC.	2.2636	7.5	9.1	31
198 ...	07	SURG	CHOLECYSTECTOMY EXCEPT BY LAPAROSCOPE W/O C.D.E. W/O CC.	1.1769	4.3	5.0	23
199 ...	07	SURG	HEPATOBILIARY DIAGNOSTIC PROCEDURE FOR MALIGNANCY.	2.3744	8.3	11.1	32
200 ...	07	SURG	HEPATOBILIARY DIAGNOSTIC PROCEDURE FOR NONMALIGNANCY.	2.9783	7.6	11.9	32

TABLE 5.—LIST OF DIAGNOSIS RELATED GROUPS (DRGS), RELATIVE WEIGHTING FACTORS, GEOMETRIC MEAN LENGTH OF STAY, AND LENGTH OF STAY OUTLIER CUTOFF POINTS USED IN THE PROSPECTIVE PAYMENT SYSTEM—Continued

				Relative weights	Geometric mean LOS	Arithmetic mean LOS	Outlier threshold
201 ...	07	SURG	OTHER HEPATOBILIARY OR PANCREAS O.R. PROCEDURES.	3.6216	12.1	16.6	36
202 ...	07	MED	CIRRHOSIS & ALCOHOLIC HEPATITIS	1.3286	5.7	7.7	30
203 ...	07	MED	MALIGNANCY OF HEPATOBILIARY SYSTEM OR PANCREAS.	1.2511	5.5	7.7	30
204 ...	07	MED	DISORDERS OF PANCREAS EXCEPT MALIGNANCY	1.2003	5.1	6.7	29
205 ...	07	MED	DISORDERS OF LIVER EXCEPT MALIG,CIRR,ALC HEPA W CC.	1.2099	5.3	7.3	29
206 ...	07	MED	DISORDERS OF LIVER EXCEPT MALIG,CIRR,ALC HEPA W/O CC.	.7211	3.6	4.8	28
207 ...	07	MED	DISORDERS OF THE BILIARY TRACT W CC	1.0500	4.4	5.8	28
208 ...	07	MED	DISORDERS OF THE BILIARY TRACT W/O CC	.6053	2.6	3.5	21
209 ...	08	SURG	MAJOR JOINT & LIMB REATTACHMENT PROCEDURES OF LOWER EXTREMITY.	2.2617	5.9	6.7	23
210 ...	08	SURG	HIP & FEMUR PROCEDURES EXCEPT MAJOR JOINT AGE >17 W CC.	1.8458	7.2	8.5	31
211 ...	08	SURG	HIP & FEMUR PROCEDURES EXCEPT MAJOR JOINT AGE >17 W/O CC.	1.2747	5.6	6.3	23
212 ...	08	SURG	*HIP & FEMUR PROCEDURES EXCEPT MAJOR JOINT AGE 0–17.	1.1483	11.1	11.1	35
213 ...	08	SURG	AMPUTATION FOR MUSCULOSKELETAL SYSTEM & CONN TISSUE DISORDERS.	1.7045	7.0	9.6	31
214 ...	08	SURG	BACK & NECK PROCEDURES W CC	1.9259	4.9	6.5	29
215 ...	08	SURG	BACK & NECK PROCEDURES W/O CC	1.1135	3.0	3.7	20
216 ...	08	SURG	BIOPSIES OF MUSCULOSKELETAL SYSTEM & CONNECTIVE TISSUE.	2.0775	7.9	11.1	32
217 ...	08	SURG	WND DEBRID & SKN GRFT EXCEPT HAND,FOR MUSCSKELET & CONN TISS DIS.	2.8715	10.2	15.3	34
218 ...	08	SURG	LOWER EXTREM & HUMER PROC EXCEPT HIP, FOOT, FEMUR AGE >17 W CC.	1.4562	4.8	6.2	29
219 ...	08	SURG	LOWER EXTREM & HUMER PROC EXCEPT HIP, FOOT, FEMUR AGE >17 W/O CC.	.9560	3.1	3.8	19
220 ...	08	SURG	*LOWER EXTREM & HUMER PROC EXCEPT HIP, FOOT, FEMUR AGE 0–17.	.5704	5.3	5.3	29
221 ...	08	SURG	KNEE PROCEDURES W CC	1.8379	5.8	8.2	30
222 ...	08	SURG	KNEE PROCEDURES W/O CC	1.0223	3.1	4.1	27
223 ...	08	SURG	MAJOR SHOULDER/ELBOW PROC, OR OTHER UPPER EXTREMITY PROC W CC.	.8726	2.2	2.9	16
224 ...	08	SURG	SHOULDER,ELBOW OR FOREARM PROC,EXC MAJOR JOINT PROC, W/O CC.	.7418	1.9	2.3	10
225 ...	08	SURG	FOOT PROCEDURES	1.0019	3.3	5.0	27
226 ...	08	SURG	SOFT TISSUE PROCEDURES W CC	1.3708	4.4	6.7	28
227 ...	08	SURG	SOFT TISSUE PROCEDURES W/O CC	.7458	2.3	3.0	18
228 ...	08	SURG	MAJOR THUMB OR JOINT PROC, OR OTH HAND OR WRIST PROC W CC.	.9381	2.3	3.6	26
229 ...	08	SURG	HAND OR WRIST PROC, EXCEPT MAJOR JOINT PROC, W/O CC.	.6495	1.8	2.4	14
230 ...	08	SURG	LOCAL EXCISION & REMOVAL OF INT FIX DEVICES OF HIP & FEMUR.	1.0592	3.3	5.2	27
231 ...	08	SURG	LOCAL EXCISION & REMOVAL OF INT FIX DEVICES EXCEPT HIP & FEMUR.	1.2285	3.3	5.1	27
232 ...	08	SURG	ARTHROSCOPY	1.0901	2.6	4.5	27
233 ...	08	SURG	OTHER MUSCULOSKELET SYS & CONN TISS O.R. PROC W CC.	1.9951	6.4	9.0	30
234 ...	08	SURG	OTHER MUSCULOSKELET SYS & CONN TISS O.R. PROC W/O CC.	1.0684	3.1	4.2	27
235 ...	08	MED	FRACTURES OF FEMUR	.8353	4.6	6.9	29
236 ...	08	MED	FRACTURES OF HIP & PELVIS	.7613	4.7	6.4	29
237 ...	08	MED	SPRAINS, STRAINS, & DISLOCATIONS OF HIP, PELVIS & THIGH.	.5622	3.3	4.4	27
238 ...	08	MED	OSTEOMYELITIS	1.3857	7.6	10.1	32
239 ...	08	MED	PATHOLOGICAL FRACTURES & MUSCULOSKELETAL & CONN TISS MALIGNANCY.	1.0096	5.8	7.6	30
240 ...	08	MED	CONNECTIVE TISSUE DISORDERS W CC	1.2107	5.5	7.5	30
241 ...	08	MED	CONNECTIVE TISSUE DISORDERS W/O CC	.6063	3.5	4.6	28
242 ...	08	MED	SEPTIC ARTHRITIS	1.0535	5.8	7.7	30
243 ...	08	MED	MEDICAL BACK PROBLEMS	.7241	4.3	5.6	28
244 ...	08	MED	BONE DISEASES & SPECIFIC ARTHROPATHIES W CC	.7221	4.3	5.8	28
245 ...	08	MED	BONE DISEASES & SPECIFIC ARTHROPATHIES W/O CC.	.4965	3.2	4.2	27

TABLE 5.—LIST OF DIAGNOSIS RELATED GROUPS (DRGS), RELATIVE WEIGHTING FACTORS, GEOMETRIC MEAN LENGTH OF STAY, AND LENGTH OF STAY OUTLIER CUTOFF POINTS USED IN THE PROSPECTIVE PAYMENT SYSTEM—Continued

				Relative weights	Geometric mean LOS	Arithmetic mean LOS	Outlier threshold
246 ...	08	MED	NON-SPECIFIC ARTHROPATHIES	.5901	3.6	4.6	28
247 ...	08	MED	SIGNS & SYMPTOMS OF MUSCULOSKELETAL SYSTEM & CONN TISSUE.	.5539	2.9	4.0	27
248 ...	08	MED	TENDONITIS, MYOSITIS & BURSITIS	.7363	3.9	5.3	28
249 ...	08	MED	AFTERCARE, MUSCULOSKELETAL SYSTEM & CONNECTIVE TISSUE.	.6514	2.9	4.3	27
250 ...	08	MED	FX, SPRN, STRN & DISL OF FOREARM, HAND, FOOT AGE >17 W CC.	.6808	3.5	4.9	28
251 ...	08	MED	FX, SPRN, STRN & DISL OF FOREARM, HAND, FOOT AGE >17 W/O CC.	.4625	2.5	3.3	22
252 ...	08	MED	*FX, SPRN, STRN & DISL OF FOREARM, HAND, FOOT AGE 0–17.	.2478	1.8	1.8	15
253 ...	08	MED	FX, SPRN, STRN & DISL OF UPARM, LOWLEG EX FOOT AGE >17 W CC.	.7438	4.3	5.8	28
254 ...	08	MED	FX, SPRN, STRN & DISL OF UPARM, LOWLEG EX FOOT AGE >17 W/O CC.	.4433	2.9	3.9	25
255 ...	08	MED	*FX, SPRN, STRN & DISL OF UPARM, LOWLEG EX FOOT AGE 0–17.	.2885	2.9	2.9	27
256 ...	08	MED	OTHER MUSCULOSKELETAL SYSTEM & CONNECTIVE TISSUE DIAGNOSES.	.7724	4.0	5.7	28
257 ...	09	SURG	TOTAL MASTECTOMY FOR MALIGNANCY W CC	.9021	2.8	3.4	17
258 ...	09	SURG	TOTAL MASTECTOMY FOR MALIGNANCY W/O CC	.7099	2.2	2.5	10
259 ...	09	SURG	SUBTOTAL MASTECTOMY FOR MALIGNANCY W CC	.8673	2.3	3.5	26
260 ...	09	SURG	SUBTOTAL MASTECTOMY FOR MALIGNANCY W/O CC	.6083	1.6	1.9	8
261 ...	09	SURG	BREAST PROC FOR NON-MALIGNANCY EXCEPT BIOPSY & LOCAL EXCISION.	.8342	1.9	2.4	12
262 ...	09	SURG	BREAST BIOPSY & LOCAL EXCISION FOR NON-MALIGNANCY.	.7694	2.7	3.9	27
263 ...	09	SURG	SKIN GRAFT &/OR DEBRID FOR SKN ULCER OR CELLULITIS W CC.	2.1157	9.8	13.9	34
264 ...	09	SURG	SKIN GRAFT &/OR DEBRID FOR SKN ULCER OR CELLULITIS W/O CC.	1.1308	6.0	8.4	30
265 ...	09	SURG	SKIN GRAFT &/OR DEBRID EXCEPT FOR SKIN ULCER OR CELLULITIS W CC.	1.4949	4.8	7.7	29
266 ...	09	SURG	SKIN GRAFT &/OR DEBRID EXCEPT FOR SKIN ULCER OR CELLULITIS W/O CC.	.7650	2.6	3.7	27
267 ...	09	SURG	PERIANAL & PILONIDAL PROCEDURES	.8086	2.7	4.1	27
268 ...	09	SURG	SKIN, SUBCUTANEOUS TISSUE & BREAST PLASTIC PROCEDURES.	.9935	2.5	4.0	27
269 ...	09	SURG	OTHER SKIN, SUBCUT TISS & BREAST PROC W CC	1.6361	6.2	9.1	30
270 ...	09	SURG	OTHER SKIN, SUBCUT TISS & BREAST PROC W/O CC	.7016	2.4	3.4	26
271 ...	09	MED	SKIN ULCERS	1.0791	6.6	8.5	31
272 ...	09	MED	MAJOR SKIN DISORDERS W CC	1.0212	5.6	7.5	30
273 ...	09	MED	MAJOR SKIN DISORDERS W/O CC	.6358	4.1	5.5	28
274 ...	09	MED	MALIGNANT BREAST DISORDERS W CC	1.0713	5.3	7.8	29
275 ...	09	MED	MALIGNANT BREAST DISORDERS W/O CC	.4984	2.5	3.6	27
276 ...	09	MED	NON-MALIGANT BREAST DISORDERS	.6443	3.9	5.1	28
277 ...	09	MED	CELLULITIS AGE >17 W CC	.8532	5.5	6.7	29
278 ...	09	MED	CELLULITIS AGE >17 W/O CC	.5775	4.3	5.1	25
279 ...	09	MED	*CELLULITIS AGE 0–17	.7187	4.2	4.2	24
280 ...	09	MED	TRAUMA TO THE SKIN, SUBCUT TISS & BREAST AGE >17 W CC.	.6765	3.7	5.1	28
281 ...	09	MED	TRAUMA TO THE SKIN, SUBCUT TISS & BREAST AGE >17 W/O CC.	.4566	2.7	3.7	24
282 ...	09	MED	*TRAUMA TO THE SKIN, SUBCUT TISS & BREAST AGE 0–17.	.2508	2.2	2.2	19
283 ...	09	MED	MINOR SKIN DISORDERS W CC	.7034	4.1	5.5	28
284 ...	09	MED	MINOR SKIN DISORDERS W/O CC	.4375	2.9	3.9	27
285 ...	10	SURG	AMPUTAT OF LOWER LIMB FOR ENDOCRINE, NUTRIT, & METABOL DISORDERS.	2.1948	9.5	13.5	34
286 ...	10	SURG	ADRENAL & PITUITARY PROCEDURES	2.3858	6.6	8.7	31
287 ...	10	SURG	SKIN GRAFTS & WOUND DEBRID FOR ENDOC, NUTRIT & METAB DISORDERS.	1.9722	9.4	13.4	33
288 ...	10	SURG	O.R. PROCEDURES FOR OBESITY	2.0537	5.3	7.0	29
289 ...	10	SURG	PARATHYROID PROCEDURES	1.0231	2.7	3.9	27
290 ...	10	SURG	THYROID PROCEDURES	.8827	2.1	2.8	15
291 ...	10	SURG	THYROGLOSSAL PROCEDURES	.5221	1.4	1.8	8
292 ...	10	SURG	OTHER ENDOCRINE, NUTRIT & METAB O.R. PROC W CC.	2.6435	8.4	12.7	32

TABLE 5.—LIST OF DIAGNOSIS RELATED GROUPS (DRGS), RELATIVE WEIGHTING FACTORS, GEOMETRIC MEAN LENGTH OF STAY, AND LENGTH OF STAY OUTLIER CUTOFF POINTS USED IN THE PROSPECTIVE PAYMENT SYSTEM—Continued

				Relative weights	Geometric mean LOS	Arithmetic mean LOS	Outlier threshold
293 ...	10	SURG	OTHER ENDOCRINE, NUTRIT & METAB O.R. PROC W/O CC.	1.2415	4.4	6.4	28
294 ...	10	MED	DIABETES AGE >35	.7604	4.3	5.7	28
295 ...	10	MED	DIABETES AGE 0–35	.7171	3.3	4.3	27
296 ...	10	MED	NUTRITIONAL & MISC METABOLIC DISORDERS AGE >17 W CC.	.8939	4.7	6.4	29
297 ...	10	MED	NUTRITIONAL & MISC METABOLIC DISORDERS AGE >17 W/O CC.	.5374	3.3	4.3	26
298 ...	10	MED	NUTRITIONAL & MISC METABOLIC DISORDERS AGE 0–17.	.5036	2.3	3.0	19
299 ...	10	MED	INBORN ERRORS OF METABOLISM	.8211	3.8	5.4	28
300 ...	10	MED	ENDOCRINE DISORDERS W CC	1.1005	5.5	7.3	30
301 ...	10	MED	ENDOCRINE DISORDERS W/O CC	.6193	3.4	4.4	27
302 ...	11	SURG	KIDNEY TRANSPLANT	3.9210	10.4	12.3	34
303 ...	11	SURG	KIDNEY, URETER & MAJOR BLADDER PROCEDURES FOR NEOPLASM.	2.6364	8.4	10.2	32
304 ...	11	SURG	KIDNEY, URETER & MAJOR BLADDER PROC FOR NON-NEOPL W CC.	2.3744	7.5	10.3	31
305 ...	11	SURG	KIDNEY, URETER & MAJOR BLADDER PROC FOR NON-NEOPL W/O CC.	1.1797	3.9	4.9	28
306 ...	11	SURG	PROSTATECTOMY W CC	1.2243	4.3	6.2	28
307 ...	11	SURG	PROSTATECTOMY W/O CC	.6709	2.4	3.0	15
308 ...	11	SURG	MINOR BLADDER PROCEDURES W CC	1.5260	4.6	7.0	29
309 ...	11	SURG	MINOR BLADDER PROCEDURES W/O CC	.8858	2.3	3.0	18
310 ...	11	SURG	TRANSURETHRAL PROCEDURES W CC	1.0013	3.1	4.6	27
311 ...	11	SURG	TRANSURETHRAL PROCEDURES W/O CC	.5663	1.8	2.2	11
312 ...	11	SURG	URETHRAL PROCEDURES, AGE >17 W CC	.9118	3.1	4.8	27
313 ...	11	SURG	URETHRAL PROCEDURES, AGE >17 W/O CC	.5211	1.7	2.3	13
314 ...	11	SURG	*URETHRAL PROCEDURES, AGE 0–17	.4835	2.3	2.3	26
315 ...	11	SURG	OTHER KIDNEY & URINARY TRACT O.R. PROCEDURES	2.0606	5.3	9.3	29
316 ...	11	MED	RENAL FAILURE	1.3066	5.4	7.6	29
317 ...	11	MED	ADMIT FOR RENAL DIALYSIS	.4837	2.0	2.8	19
318 ...	11	MED	KIDNEY & URINARY TRACT NEOPLASMS W CC	1.1233	5.0	7.2	29
319 ...	11	MED	KIDNEY & URINARY TRACT NEOPLASMS W/O CC	.5801	2.3	3.2	24
320 ...	11	MED	KIDNEY & URINARY TRACT INFECTIONS AGE >17 W CC.	.9052	5.1	6.4	29
321 ...	11	MED	KIDNEY & URINARY TRACT INFECTIONS AGE >17 W/O CC.	.6094	3.9	4.7	24
322 ...	11	MED	KIDNEY & URINARY TRACT INFECTIONS AGE 0–17	.5265	3.6	4.4	24
323 ...	11	MED	URINARY STONES W CC, &/OR ESW LITHOTRIPSY	.7490	2.7	3.6	24
324 ...	11	MED	URINARY STONES W/O CC	.4161	1.7	2.1	10
325 ...	11	MED	KIDNEY & URINARY TRACT SIGNS & SYMPTOMS AGE >17 W CC.	.6397	3.4	4.6	27
326 ...	11	MED	KIDNEY & URINARY TRACT SIGNS & SYMPTOMS AGE >17 W/O CC.	.4346	2.4	3.5	19
327 ...	11	MED	*KIDNEY & URINARY TRACT SIGNS & SYMPTOMS AGE 0–17.	.2340	3.1	3.1	27
328 ...	11	MED	URETHRAL STRICTURE AGE >17 W CC	.6929	3.1	4.3	27
329 ...	11	MED	URETHRAL STRICTURE AGE >17 W/O CC	.4536	2.1	2.8	16
330 ...	11	MED	*URETHRAL STRICTURE AGE 0–17	.3114	1.6	1.6	9
331 ...	11	MED	OTHER KIDNEY & URINARY TRACT DIAGNOSES AGE >17 W CC.	.9926	4.6	6.2	29
332 ...	11	MED	OTHER KIDNEY & URINARY TRACT DIAGNOSES AGE >17 W/O CC.	.6170	2.8	3.9	27
333 ...	11	MED	OTHER KIDNEY & URINARY TRACT DIAGNOSES AGE 0–17.	.8641	4.3	5.9	28
334 ...	12	SURG	MAJOR MALE PELVIC PROCEDURES W CC	1.6656	5.3	6.0	23
335 ...	12	SURG	MAJOR MALE PELVIC PROCEDURES W/O CC	1.2596	4.1	4.6	17
336 ...	12	SURG	TRANSURETHRAL PROSTATECTOMY W CC	.8859	3.2	4.1	24
337 ...	12	SURG	TRANSURETHRAL PROSTATECTOMY W/O CC	.6149	2.3	2.7	11
338 ...	12	SURG	TESTES PROCEDURES, FOR MALIGNANCY	1.0534	3.5	5.3	27
339 ...	12	SURG	TESTES PROCEDURES, NON-MALIGNANCY AGE >17	1.0213	3.1	4.9	27
340 ...	12	SURG	*TESTES PROCEDURES, NON-MALIGNANCY AGE 0–17	.2768	2.4	2.4	13
341 ...	12	SURG	PENIS PROCEDURES	1.0701	2.3	3.2	21
342 ...	12	SURG	CIRCUMCISION AGE >17	.7579	2.6	4.0	27
343 ...	12	SURG	*CIRCUMCISION AGE 0–17	.1503	1.7	1.7	6
344 ...	12	SURG	OTHER MALE REPRODUCTIVE SYSTEM O.R. PROCEDURES FOR MALIGNANCY.	1.0086	2.3	3.5	25
345 ...	12	SURG	OTHER MALE REPRODUCTIVE SYSTEM O.R. PROC EXCEPT FOR MALIGNANCY.	.8396	2.7	4.0	27

TABLE 5.—LIST OF DIAGNOSIS RELATED GROUPS (DRGS), RELATIVE WEIGHTING FACTORS, GEOMETRIC MEAN LENGTH OF STAY, AND LENGTH OF STAY OUTLIER CUTOFF POINTS USED IN THE PROSPECTIVE PAYMENT SYSTEM—Continued

				Relative weights	Geometric mean LOS	Arithmetic mean LOS	Outlier threshold
346 ...	12	MED	MALIGNANCY, MALE REPRODUCTIVE SYSTEM, W CC	.9564	4.8	6.8	29
347 ...	12	MED	MALIGNANCY, MALE REPRODUCTIVE SYSTEM, W/O CC.	.5161	2.4	3.4	26
348 ...	12	MED	BENIGN PROSTATIC HYPERTROPHY W CC	.7102	3.5	4.9	28
349 ...	12	MED	BENIGN PROSTATIC HYPERTROPHY W/O CC	.4048	2.2	3.0	21
350 ...	12	MED	INFLAMMATION OF THE MALE REPRODUCTIVE SYSTEM.	.6631	3.9	4.8	24
351 ...	12	MED	*STERILIZATION, MALE	.2309	1.3	1.3	5
352 ...	12	MED	OTHER MALE REPRODUCTIVE SYSTEM DIAGNOSES	.5889	2.8	4.0	27
353 ...	13	SURG	PELVIC EVISCERATION, RADICAL HYSTERECTOMY & RADICAL VULVECTOMY.	1.9266	6.7	8.4	31
354 ...	13	SURG	UTERINE, ADNEXA PROC FOR NON-OVARIAN/ADNEXAL MALIG W CC.	1.4646	5.2	6.3	28
355 ...	13	SURG	UTERINE, ADNEXA PROC FOR NON-OVARIAN/ADNEXAL MALIG W/O CC.	.9065	3.6	3.9	11
356 ...	13	SURG	FEMALE REPRODUCTIVE SYSTEM RECONSTRUCTIVE PROCEDURES.	.7377	2.6	3.0	12
357 ...	13	SURG	UTERINE & ADNEXA PROC FOR OVARIAN OR ADNEXAL MALIGNANCY.	2.3847	8.0	9.8	32
358 ...	13	SURG	UTERINE & ADNEXA PROC FOR NON-MALIGNANCY W CC.	1.1713	4.0	4.7	19
359 ...	13	SURG	UTERINE & ADNEXA PROC FOR NON-MALIGNANCY W/O CC.	.8289	3.0	3.3	10
360 ...	13	SURG	VAGINA, CERVIX & VULVA PROCEDURES	.8470	2.9	3.5	17
361 ...	13	SURG	LAPAROSCOPY & INCISIONAL TUBAL INTERRUPTION	1.1284	2.5	3.5	23
362 ...	13	SURG	*ENDOSCOPIC TUBAL INTERRUPTION	.2950	1.4	1.4	5
363 ...	13	SURG	D&C, CONIZATION & RADIO-IMPLANT, FOR MALIGNANCY.	.6887	2.6	3.5	20
364 ...	13	SURG	D&C, CONIZATION EXCEPT FOR MALIGNANCY	.6823	2.6	3.6	27
365 ...	13	SURG	OTHER FEMALE REPRODUCTIVE SYSTEM O.R. PROCEDURES.	1.7253	5.3	8.1	29
366 ...	13	MED	MALIGNANCY, FEMALE REPRODUCTIVE SYSTEM W CC	1.1948	5.3	7.7	29
367 ...	13	MED	MALIGNANCY, FEMALE REPRODUCTIVE SYSTEM W/O CC.	.5173	2.3	3.3	24
368 ...	13	MED	INFECTIONS, FEMALE REPRODUCTIVE SYSTEM	1.0303	5.3	6.9	29
369 ...	13	MED	MENSTRUAL & OTHER FEMALE REPRODUCTIVE SYSTEM DISORDERS.	.5504	2.6	3.8	27
370 ...	14	SURG	CESAREAN SECTION W CC	1.0444	4.3	5.6	26
371 ...	14	SURG	CESAREAN SECTION W/O CC	.6865	3.2	3.6	11
372 ...	14	MED	VAGINAL DELIVERY W COMPLICATING DIAGNOSES	.5471	2.4	3.3	19
373 ...	14	MED	VAGINAL DELIVERY W/O COMPLICATING DIAGNOSES	.3584	1.6	1.9	7
374 ...	14	SURG	VAGINAL DELIVERY W STERILIZATION &/OR D&C	.6083	2.0	2.4	9
375 ...	14	SURG	*VAGINAL DELIVERY W O.R. PROC EXCEPT STERIL &/OR D&C.	.6696	4.4	4.4	28
376 ...	14	MED	POSTPARTUM & POST ABORTION DIAGNOSES W/O O.R. PROCEDURE.	.5972	2.4	3.5	26
377 ...	14	SURG	POSTPARTUM & POST ABORTION DIAGNOSES W O.R. PROCEDURE.	.8078	2.0	3.2	26
378 ...	14	MED	ECTOPIC PREGNANCY	.8157	2.5	3.0	15
379 ...	14	MED	THREATENED ABORTION	.3573	2.0	2.9	20
380 ...	14	MED	ABORTION W/O D&C	.4988	1.8	2.3	13
381 ...	14	SURG	ABORTION W D&C, ASPIRATION CURETTAGE OR HYSTEROTOMY.	.5212	1.6	2.3	14
382 ...	14	MED	FALSE LABOR	.2100	1.3	1.7	7
383 ...	14	MED	OTHER ANTEPARTUM DIAGNOSES W MEDICAL COMPLICATIONS.	.4672	2.8	4.1	27
384 ...	14	MED	OTHER ANTEPARTUM DIAGNOSES W/O MEDICAL COMPLICATIONS.	.4140	1.9	3.3	24
385 ...	15		*NEONATES, DIED OR TRANSFERRED TO ANOTHER ACUTE CARE FACILITY.	1.3437	1.8	1.8	26
386 ...	15		*EXTREME IMMATURITY OR RESPIRATORY DISTRESS SYNDROME, NEONATE.	4.4311	17.9	17.9	42
387 ...	15		*PREMATURITY W MAJOR PROBLEMS	3.0264	13.3	13.3	37
388 ...	15		*PREMATURITY W/O MAJOR PROBLEMS	1.8261	8.6	8.6	33
389 ...	15		FULL TERM NEONATE W MAJOR PROBLEMS	2.2247	8.0	10.7	32
390 ...	15		NEONATE W OTHER SIGNIFICANT PROBLEMS	1.4188	3.8	5.0	28
391 ...	15		*NORMAL NEWBORN	.1489	3.1	3.1	11
392 ...	16	SURG	SPLENECTOMY AGE >17	3.2602	8.9	11.7	33
393 ...	16	SURG	*SPLENECTOMY AGE 0–17	1.3163	9.1	9.1	33

TABLE 5.—LIST OF DIAGNOSIS RELATED GROUPS (DRGS), RELATIVE WEIGHTING FACTORS, GEOMETRIC MEAN LENGTH OF STAY, AND LENGTH OF STAY OUTLIER CUTOFF POINTS USED IN THE PROSPECTIVE PAYMENT SYSTEM—Continued

				Relative weights	Geometric mean LOS	Arithmetic mean LOS	Outlier threshold
394 ...	16	SURG	OTHER O.R. PROCEDURES OF THE BLOOD AND BLOOD FORMING ORGANS.	1.5902	4.5	7.9	28
395 ...	16	MED	RED BLOOD CELL DISORDERS AGE >17	.8360	3.9	5.4	28
396 ...	16	MED	RED BLOOD CELL DISORDERS AGE 0–17	.7226	2.8	3.9	27
397 ...	16	MED	COAGULATION DISORDERS	1.2574	4.4	6.1	28
398 ...	16	MED	RETICULOENDOTHELIAL & IMMUNITY DISORDERS W CC.	1.2106	5.2	6.6	29
399 ...	16	MED	RETICULOENDOTHELIAL & IMMUNITY DISORDERS W/O CC.	.7061	3.5	4.4	27
400 ...	17	SURG	LYMPHOMA & LEUKEMIA W MAJOR O.R. PROCEDURE	2.5606	6.6	10.3	31
401 ...	17	SURG	LYMPHOMA & NON-ACUTE LEUKEMIA W OTHER O.R. PROC W CC.	2.4945	8.5	12.4	32
402 ...	17	SURG	LYMPHOMA & NON-ACUTE LEUKEMIA W OTHER O.R. PROC W/O CC.	1.0299	3.1	4.7	27
403 ...	17	MED	LYMPHOMA & NON-ACUTE LEUKEMIA W CC	1.6925	6.5	9.3	30
404 ...	17	MED	LYMPHOMA & NON-ACUTE LEUKEMIA W/O CC	.8070	3.7	5.1	28
405 ...	17		*ACUTE LEUKEMIA W/O MAJOR O.R. PROCEDURE AGE 0–17.	1.8661	4.9	4.9	29
406 ...	17	SURG	MYELOPROLIF DISORD OR POORLY DIFF NEOPL W MAJ O.R. PROC W CC.	2.6923	8.1	11.2	32
407 ...	17	SURG	MYELOPROLIF DISORD OR POORLY DIFF NEOPL W MAJ O.R. PROC W/O CC.	1.1822	3.8	4.9	28
408 ...	17	SURG	MYELOPROLIF DISORD OR POORLY DIFF NEOPL W OTHER O.R. PROC.	1.7412	5.0	8.2	29
409 ...	17	MED	RADIOTHERAPY	.9708	4.7	6.7	29
410 ...	17	MED	CHEMOTHERAPY W/O ACUTE LEUKEMIA AS SECONDARY DIAGNOSIS.	.7524	2.6	3.4	20
411 ...	17	MED	HISTORY OF MALIGNANCY W/O ENDOSCOPY	.3780	2.1	2.6	14
412 ...	17	MED	HISTORY OF MALIGNANCY W ENDOSCOPY	.4133	2.2	3.1	24
413 ...	17	MED	OTHER MYELOPROLIF DIS OR POORLY DIFF NEOPL DIAG W CC.	1.3263	5.9	8.3	30
414 ...	17	MED	OTHER MYELOPROLIF DIS OR POORLY DIFF NEOPL DIAG W/O CC.	.7442	3.8	5.2	28
415 ...	18	SURG	O.R. PROCEDURE FOR INFECTIOUS & PARASITIC DISEASES.	3.4473	11.4	15.7	35
416 ...	18	MED	SEPTICEMIA AGE >17	1.4862	6.2	8.2	30
417 ...	18	MED	SEPTICEMIA AGE 0–17	.7936	3.7	4.7	28
418 ...	18	MED	POSTOPERATIVE & POST-TRAUMATIC INFECTIONS	.9678	5.3	6.8	29
419 ...	18	MED	FEVER OF UNKNOWN ORIGIN AGE >17 W CC	.8993	4.4	5.7	28
420 ...	18	MED	FEVER OF UNKNOWN ORIGIN AGE >17 W/O CC	.6253	3.5	4.3	24
421 ...	18	MED	VIRAL ILLNESS AGE >17	.7157	3.6	4.6	28
422 ...	18	MED	VIRAL ILLNESS & FEVER OF UNKNOWN ORIGIN AGE 0–17.	.5217	2.9	3.7	23
423 ...	18	MED	OTHER INFECTIOUS & PARASITIC DISEASES DIAGNOSES.	1.5864	6.3	8.7	30
424 ...	19	SURG	O.R. PROCEDURE W PRINCIPAL DIAGNOSES OF MENTAL ILLNESS.	2.3596	10.9	17.8	35
425 ...	19	MED	ACUTE ADJUST REACT & DISTURBANCES OF PSYCHOSOCIAL DYSFUNCTION.	.7078	3.5	4.9	27
426 ...	19	MED	DEPRESSIVE NEUROSES	.5715	4.0	5.5	28
427 ...	19	MED	NEUROSES EXCEPT DEPRESSIVE	.5544	3.7	5.3	28
428 ...	19	MED	DISORDERS OF PERSONALITY & IMPULSE CONTROL	.7352	5.2	8.5	29
429 ...	19	MED	ORGANIC DISTURBANCES & MENTAL RETARDATION ...	.9063	5.9	8.9	30
430 ...	19	MED	PSYCHOSES	.8422	6.9	9.8	31
431 ...	19	MED	CHILDHOOD MENTAL DISORDERS	.6694	5.0	7.5	29
432 ...	19	MED	OTHER MENTAL DISORDER DIAGNOSES	.7228	3.9	6.3	28
433 ...	20		ALCOHOL/DRUG ABUSE OR DEPENDENCE, LEFT AMA	.3007	2.5	3.4	24
434 ...	20		ALC/DRUG ABUSE OR DEPEND, DETOX OR OTH SYMPT TREAT W CC.	.7152	4.4	5.8	28
435 ...	20		ALC/DRUG ABUSE OR DEPEND, DETOX OR OTH SYMPT TREAT W/O CC.	.4178	3.8	4.8	28
436 ...	20		ALC/DRUG DEPENDENCE W REHABILITATION THERAPY.	.8199	12.1	14.8	36
437 ...	20		ALC/DRUG DEPENDENCE, COMBINED REHAB & DETOX THERAPY.	.7714	9.2	10.9	33
438 ...	.....		NO LONGER VALID	.0000	.0	.0	0
439 ...	21	SURG	SKIN GRAFTS FOR INJURIES	1.6153	5.8	8.9	30
440 ...	21	SURG	WOUND DEBRIDEMENTS FOR INJURIES	1.7631	6.3	9.8	30
441 ...	21	SURG	HAND PROCEDURES FOR INJURIES	.9344	2.4	4.4	26
442 ...	21	SURG	OTHER O.R. PROCEDURES FOR INJURIES W CC	2.1659	5.6	8.7	30

TABLE 5.—LIST OF DIAGNOSIS RELATED GROUPS (DRGS), RELATIVE WEIGHTING FACTORS, GEOMETRIC MEAN LENGTH OF STAY, AND LENGTH OF STAY OUTLIER CUTOFF POINTS USED IN THE PROSPECTIVE PAYMENT SYSTEM—Continued

				Relative weights	Geometric mean LOS	Arithmetic mean LOS	Outlier threshold
443 ...	21	SURG	OTHER O.R. PROCEDURES FOR INJURIES W/O CC	.8851	2.5	3.5	26
444 ...	21	MED	TRAUMATIC INJURY AGE >17 W CC	.7310	4.0	5.3	28
445 ...	21	MED	TRAUMATIC INJURY AGE >17 W/O CC	.4754	2.8	3.8	24
446 ...	21	MED	*TRAUMATIC INJURY AGE 0–17	.2893	2.4	2.4	22
447 ...	21	MED	ALLERGIC REACTIONS AGE >17	.4908	2.1	2.8	17
448 ...	21	MED	ALLERGIC REACTIONS AGE 0–17	.0759	1.0	1.0	1
449 ...	21	MED	POISONING & TOXIC EFFECTS OF DRUGS AGE >17 W CC.	.7907	3.0	4.4	27
450 ...	21	MED	POISONING & TOXIC EFFECTS OF DRUGS AGE >17 W/O CC.	.4276	1.8	2.3	13
451 ...	21	MED	*POISONING & TOXIC EFFECTS OF DRUGS AGE 0–17	.2569	2.1	2.1	17
452 ...	21	MED	COMPLICATIONS OF TREATMENT W CC	.9448	3.8	5.4	28
453 ...	21	MED	COMPLICATIONS OF TREATMENT W/O CC	.4853	2.4	3.2	20
454 ...	21	MED	OTHER INJURY, POISONING & TOXIC EFFECT DIAG W CC.	.8536	3.4	5.1	27
455 ...	21	MED	OTHER INJURY, POISONING & TOXIC EFFECT DIAG W/O CC.	.4445	2.1	2.8	18
456 ...	22		BURNS, TRANSFERRED TO ANOTHER ACUTE CARE FACILITY.	1.8816	4.0	8.4	28
457 ...	22	MED	EXTENSIVE BURNS W/O O.R. PROCEDURE	1.4446	2.4	4.8	26
458 ...	22	SURG	NON-EXTENSIVE BURNS W SKIN GRAFT	3.5465	12.0	17.0	36
459 ...	22	SURG	NON-EXTENSIVE BURNS W WOUND DEBRIDEMENT OR OTHER O.R. PROC.	1.6693	6.7	10.3	31
460 ...	22	MED	NON-EXTENSIVE BURNS W/O O.R. PROCEDURE	.9554	4.6	6.6	29
461 ...	23	SURG	O.R. PROC W DIAGNOSES OF OTHER CONTACT W HEALTH SERVICES.	.9981	2.5	4.9	27
462 ...	23	MED	REHABILITATION	1.4294	11.0	14.0	35
463 ...	23	MED	SIGNS & SYMPTOMS W CC	.7074	3.8	5.2	28
464 ...	23	MED	SIGNS & SYMPTOMS W/O CC	.5040	2.8	3.7	24
465 ...	23	MED	AFTERCARE W HISTORY OF MALIGNANCY AS SECONDARY DIAGNOSIS.	.5611	2.3	3.9	26
466 ...	23	MED	AFTERCARE W/O HISTORY OF MALIGNANCY AS SECONDARY DIAGNOSIS.	.5728	2.5	4.7	27
467 ...	23	MED	OTHER FACTORS INFLUENCING HEALTH STATUS	.4588	2.4	4.1	26
468 ...	.....		EXTENSIVE O.R. PROCEDURE UNRELATED TO PRINCIPAL DIAGNOSIS.	3.5858	10.6	15.3	35
469 ...	.....		**PRINCIPAL DIAGNOSIS INVALID AS DISCHARGE DIAGNOSIS.	.0000	.0	.0	0
470 ...	.....		**UNGROUPABLE	.0000	.0	.0	0
471 ...	08	SURG	BILATERAL OR MULTIPLE MAJOR JOINT PROCS OF LOWER EXTREMITY.	3.6043	6.8	8.0	31
472 ...	22	SURG	EXTENSIVE BURNS W O.R. PROCEDURE	11.1357	17.3	30.7	41
473 ...	17		ACUTE LEUKEMIA W/O MAJOR O.R. PROCEDURE AGE >17.	3.5669	8.5	14.7	32
474 ...	.....		NO LONGER VALID	.0000	.0	.0	0
475 ...	04	MED	RESPIRATORY SYSTEM DIAGNOSIS WITH VENTILATOR SUPPORT.	3.6736	8.6	12.3	33
476 ...	.....	SURG	PROSTATIC O.R. PROCEDURE UNRELATED TO PRINCIPAL DIAGNOSIS.	2.2362	10.3	13.8	34
477 ...	.....	SURG	NON-EXTENSIVE O.R. PROCEDURE UNRELATED TO PRINCIPAL DIAGNOSIS.	1.7153	5.8	9.2	30
478 ...	05	SURG	OTHER VASCULAR PROCEDURES W CC	2.2890	5.6	8.3	30
479 ...	05	SURG	OTHER VASCULAR PROCEDURES W/O CC	1.4113	3.5	4.6	27
480 ...	.....	SURG	LIVER TRANSPLANT	12.8388	22.5	29.7	47
481 ...	.....	SURG	BONE MARROW TRANSPLANT	11.2985	29.1	32.1	53
482 ...	.....	SURG	TRACHEOSTOMY FOR FACE, MOUTH & NECK DIAGNOSES.	3.6598	11.4	15.0	35
483 ...	.....	SURG	TRACHEOSTOMY EXCEPT FOR FACE, MOUTH & NECK DIAGNOSES.	16.0114	35.9	46.2	60
484 ...	24	SURG	CRANIOTOMY FOR MULTIPLE SIGNIFICANT TRAUMA ...	5.5711	10.4	15.5	34
485 ...	24	SURG	LIMB REATTACHMENT, HIP AND FEMUR PROC FOR MULTIPLE SIGNIFICANT TR.	3.1619	9.1	11.6	33
486 ...	24	SURG	OTHER O.R. PROCEDURES FOR MULTIPLE SIGNIFICANT TRAUMA.	4.8009	9.0	13.5	33
487 ...	24	MED	OTHER MULTIPLE SIGNIFICANT TRAUMA	1.9999	6.1	9.0	30
488 ...	25	SURG	HIV W EXTENSIVE O.R. PROCEDURE	4.2773	12.9	17.6	37
489 ...	25	MED	HIV W MAJOR RELATED CONDITION	1.7436	7.0	10.4	31
490 ...	25	MED	HIV W OR W/O OTHER RELATED CONDITION	1.0106	4.4	6.6	28
491 ...	08	SURG	MAJOR JOINT & LIMB REATTACHMENT PROCEDURES OF UPPER EXTREMITY.	1.6358	3.6	4.3	19

TABLE 5.—LIST OF DIAGNOSIS RELATED GROUPS (DRGS), RELATIVE WEIGHTING FACTORS, GEOMETRIC MEAN LENGTH OF STAY, AND LENGTH OF STAY OUTLIER CUTOFF POINTS USED IN THE PROSPECTIVE PAYMENT SYSTEM—Continued

				Relative weights	Geometric mean LOS	Arithmetic mean LOS	Outlier threshold
492 ...	17	MED	CHEMOTHERAPY W ACUTE LEUKEMIA AS SECONDARY DIAGNOSIS.	4.0624	11.2	17.4	35
493 ...	07	SURG	LAPAROSCOPIC CHOLECYSTECTOMY W/O C.D.E. W CC.	1.7085	4.2	5.9	28
494 ...	07	SURG	LAPAROSCOPIC CHOLECYSTECTOMY W/O C.D.E. W/O CC.	.9186	1.8	2.4	15
495 ...	.....	SURG	LUNG TRANSPLANT	9.8070	18.4	23.8	42

*Medicare data have been supplemented by data from 19 states for low volume DRGS.
**DRGS 469 and 470 contain cases which could not be assigned to valid DRGS.
Note: Geometric mean is used only to determine payment for transfer cases.
Note: Arithmetic mean is used only to determine payment for outlier cases.
Note: relative weights are based on Medicare patient data and may not be appropriate for other patients.

TABLE 6A.—NEW DIAGNOSIS CODES

Diagnosis code	Description	CC	MDC	DRG
079.6	Respiratory syncytial virus (RSV)	N	15	387[1], 389[1]
			18	421, 422
291.81	Alcohol withdrawal	Y	20	434, 435, 436, 437
291.89	Other specified alcoholic psychosis, not elsewhere classified	Y	20	434, 435, 436, 437
293.84	Organic anxiety syndrome	Y	19	429
300.82	Undifferentiated somatoform disorder	N	19	427
315.32	Receptive language disorder (mixed)	N	19	431
414.04	Coronary atherosclerosis of artery bypass graft	N	5	132, 133
414.05	Coronary atherosclerosis of unspecified type of bypass graft	N	5	132, 133
466.11	Acute bronchiolitis due to respiratory syncytial virus (RSV)	N	4	96, 97, 98
466.19	Acute bronchiolitis due to other infectious organisms	N	4	96, 97, 98
483.1	Pneumonia due to Chlamydia	Y	4	89, 90, 91
			15	387,[1] 389[1]
574.60	Calculus of gallbladder and bile duct with acute cholecystitis without mention of obstruction.	Y	7	207, 208
574.61	Calculus of gallbladder and bile duct with acute cholecystitis with obstruction	Y	7	207, 208
574.70	Calculus of gallbladder and bile duct with other cholecystitis without mention of obstruction.	Y	7	207, 208
574.71	Calculus of gallbladder and bile duct with other cholecystitis with obstruction	Y	7	207, 208
574.80	Calculus of gallbladder and bile duct with acute and chronic cholecystitis without mention of obstruction.	Y	7	207, 208
574.81	Calculus of gallbladder and bile duct with acute and chronic cholecystitis with obstruction.	Y	7	207, 208
574.90	Calculus of gallbladder and bile duct without cholecystitis without mention of obstruction.	Y	7	207, 208
574.91	Calculus of gallbladder and bile duct without cholecystitis with obstruction	Y	7	207, 208
575.10	Cholecystitis, unspecified	N	7	207, 208
575.11	Chronic cholecystitis	N	7	207, 208
575.12	Acute and chronic cholecystitis	Y	7	207, 208
752.51	Undescended testis	N	12	352
752.52	Retractile testis	N	12	352
752.61	Hypospadias	N	12	352
752.62	Epispadias	N	12	352
752.63	Congenital chordee	N	12	352
752.64	Micropenis	N	12	352
752.65	Hidden penis	N	12	352
752.69	Other penile anomalies	N	12	352
753.20	Unspecified obstructive defect of renal pelvis and ureter	N	11	331, 332, 333
753.21	Congenital obstruction of ureteropelvic junction	N	11	331, 332, 333
753.22	Congenital obstruction of ureterovesical junction	N	11	331, 332, 333
753.23	Congenital ureterocele	N	11	331, 332, 333
753.29	Obstructive defects of renal pelvis and ureter, not elsewhere classifed	N	11	331, 332, 333
758.81	Other conditions due to sex chromosome anomalies	N	12	352
			13	358, 359, 369
758.89	Other conditions due to chromosome anomalies, not elsewhere classified	N	12	352
			13	358, 359, 369
922.31	Back contusion	N	9	280, 281, 282
922.32	Buttock contusion	N	9	280, 281, 282
922.33	Interscapular region contusion	N	9	280, 281, 282
995.50	Child abuse, unspecified	N	21	454, 455
995.51	Child emotional/psychological abuse	N	21	454, 455

TABLE 6A.—NEW DIAGNOSIS CODES—Continued

Diagnosis code	Description	CC	MDC	DRG
995.52	Child neglect (nutritional)	N	21	454, 455
995.53	Child sexual abuse	N	21	454, 455
995.54	Child physical abuse	N	21	454, 455
995.55	Shaken infant syndrome	N	21	454, 455
995.59	Child maltreatment syndrome, not elsewhere classified	N	21	454, 455
995.80	Adult maltreatment, unspecified	N	21	454, 455
995.82	Adult emotional/psychological abuse	N	21	454, 455
995.83	Adult sexual abuse	N	21	454, 455
995.84	Adult neglect (nutritional)	N	21	454, 455
995.85	Other adult abuse and neglect	N	21	454, 455
998.11	Hemorrhage complicating a procedure	Y	21	452, 453
998.12	Hematoma complicating a procedure	Y	21	452, 453
998.13	Seroma complicating a procedure	Y	21	452, 453
998.51	Infected postoperative seroma	Y	18	418
998.59	Other postoperative infection	Y	18	418
998.83	Non-healing surgical wound	Y	21	452, 453
V15.41	History of physical abuse	N	23	467
V15.42	History of emotional abuse	N	23	467
V15.49	Psychological trauma, not elsewhere classified	N	23	467
V61.10	Counseling for marital and partner problems, unspecified	N	23	467
V61.11	Counseling for victim of spousal and partner abuse	N	23	467
V61.12	Counseling for perpetrator of spousal and partner abuse	N	23	467
V61.22	Counseling for perpetrator of parental child abuse	N	23	467
V62.83	Counseling for perpetrator of physical/sexual abuse	N	23	467
V66.7	Encounter for palliative care	N	23	467

[1] Diagnosis code is classified as a ''major problem'' in these DRGs.

TABLE 6B.—NEW PROCEDURE CODES

Procedure code	Description	OR	MDC	DRG
36.17	Abdominal-coronary artery bypass	Y	5	106, 107
39.90	Insertion of non-coronary artery stent or stents	N	.....	
47.01	Laparoscopic appendectomy	Y	6	164, 165, 166, 167
47.09	Other appendectomy	Y	6	164, 165, 166, 167
47.11	Laparoscopic incidental appendectomy	Y	13	365
			21	442, 443
			24	486
47.19	Other incidental appendectomy	Y	13	365
			21	442, 443
			24	486
51.21	Other partial cholecystectomy	Y	7	193, 194
			17	400, 406,
			17	407
			21	442, 443
			24	486
51.24	Laparoscopic partial cholecystectomy	Y	7	193, 194
			17	400, 406,
			17	407,
			21	442, 443
			24	486
52.84	Autotransplantation of cells of Islets of Langerhans	N	.....	
52.85	Allotransplantation of cells of Islets of Langerhans	N	.....	
52.86	Transplantation of cells of Islets of Langerhans, not otherwise specified	N	.....	
54.51	Laparoscopic lysis of peritoneal adhesions	Y	6	150, 151
			7	201
			13	365
			21	442, 443
			24	486
54.59	Other lysis of peritoneal adhesions	Y	6	150, 151
			7	201
			13	365
			21	442, 443
			24	486
59.03	Laparoscopic lysis of perirenal or periureteral adhesions	Y	11	303, 304, 305
			12	344, 345
			13	365
			17	400
			17	406, 407

TABLE 6B.—NEW PROCEDURE CODES—Continued

Procedure code	Description	OR	MDC	DRG
			21	442, 443
			24	486
59.12	Laparoscopic lysis of perivesical adhesions	Y	11	308, 309
			12	344, 345
			13	365
			17	400
			17	406, 407
			21	442, 443
			24	486
65.01	Laparoscopic oophorotomy	Y	13	354, 355, 357, 358, 359
65.09	Other oophorotomy	Y	13	354, 355, 357, 358, 359
65.13	Laparoscopic biopsy of ovary	Y	13	354, 355, 357, 358, 359
65.14	Other laparoscopic diagnostic procedures on ovaries	Y	13	354, 355, 357, 358, 359
65.23	Laparoscopic marsupialization of ovarian cyst	Y	13	354, 355, 357, 358, 359
65.24	Laparoscopic wedge resection of ovary	Y	10	292, 293
			13	354, 355, 357, 358, 359
65.25	Other laparoscopic local excision or destruction of ovary	Y	13	354, 355, 357, 358, 359
65.31	Laparoscopic unilateral oophorectomy	Y	13	354, 355, 357, 358, 359
65.39	Other unilateral oophorectomy	Y	13	354, 355, 357, 358, 359
65.41	Laparoscopic unilateral salpingo-oophorectomy	Y	13	354, 355, 357, 358, 359
65.49	Other unilateral salpingo-oophorectomy	Y	13	354, 355, 357, 358, 359
65.53	Laparoscopic removal of both ovaries at same operative episode	Y	9	269, 270
			13	354, 355,
			13	357, 358, 359
65.54	Laparoscopic removal of remaining ovary	Y	9	269, 270
			13	354, 355,
			13	357, 358, 359
65.63	Laparoscopic removal of both ovaries and tubes at same operative episode	Y	9	269, 270
			13	354, 355,
			13	357, 358, 359
65.64	Laparoscopic removal of remaining ovary and tube	Y	13	354, 355, 357, 358, 359
65.74	Laparoscopic simple suture of ovary	Y	13	354, 355,
			13	357, 358,
			21	359
			24	442, 443, 486
65.75	Laparoscopic reimplantation of ovary	Y	13	354, 355,
			13	357, 358,
			21	359
			24	442, 443, 486
65.76	Laparoscopic salpingo-oophoroplasty	Y	13	354, 355,
			13	357, 358,
			21	359
			24	442, 443, 486
65.81	Laparoscopic lysis of adhesions of ovary and fallopian tube	Y	13	354, 355,
			13	357, 358,
			21	359
			24	442, 443, 486
65.89	Other lysis of adhesions of ovary and fallopian tube	Y	13	354, 355,
			13	357, 358,
			21	359
			24	442, 443, 486
68.23	Endometrial ablation	Y	13	354, 355, 357, 358, 359
68.51	Laparoscopically assisted vaginal hysterectomy (LAVH)	Y	13	354, 355,
			13	357, 358,
			14	359, 375
68.59	Other vaginal hysterectomy	Y	13	354, 355,
			13	357, 358,
			14	359, 375

TABLE 6C.—TABLE DIAGNOSIS CODES

Diagnosis code	Description	CC	MDC	DRG
291.8	Other specified alcoholic psychosis	Y	20	434, 435, 436, 437
466.1	Acute bronchiolitis	N	4	96, 97, 98
575.1	Other cholecystitis	N	7	207, 208
752.5	Undescended testicle	N	12	352
752.6	Hypospadias and epispadias	N	12	352
753.2	Obstructive defects of renal pelvis and ureter	N	11	331, 332, 333
758.8	Other conditions due to sex chromosome anomalies	N	12	352
			13	358, 359, 369
922.3	Contusion of back	N	9	280, 281,
			9	282
			24	484, 486, 487
995.5	Child maltreatment syndrome	N	21	454, 455
998.1	Hemorrhage or hematoma complicating a procedure	Y	15	387 [1], 389 [1]
			21	452, 453
998.5	Postoperative infection	Y	15	387 [1], 389 [1]
			18	418
V15.4	Psychological trauma	N	23	467
V61.1	Marital problems	N	23	467

[1] Diagnosis code is classified as a ''major problem'' in these DRGs.

TABLE 6D.—INVALID PROCEDURE CODES

Procedure code	Description	OR	MDC	DRG
47.0	Appendectomy	Y	6	164, 165, 166, 167
47.1	Incidental appendectomy	Y	13	365,
			21	442, 443,
			24	486
54.5	Lysis of peritoneal adhesions	Y	6	150, 151
			7	201
			13	365
			21	442, 443
			24	486
59.01	Ureterolysis with freeing or repositioning of ureter for retroperitoneal fibrosis	Y	11	303, 304,
			11	305
			12	344, 345
			13	365
			17	400, 406,
			17	407
			21	442, 443
			24	486
65.0	Oophorotomy	Y	13	354, 355, 357, 358, 359
65.3	Unilateral oophorectomy	Y	13	354, 355, 357, 358, 359
65.4	Unilateral salpingo-oophorectomy	Y	13	354, 355, 357, 358, 359
65.8	Lysis of adhesions of ovary and fallopian tube	Y	13	354, 355,
			13	357, 358,
			21	359
			24	442, 443, 486
68.5	Vaginal hysterectomy	Y	13	354, 355,
			13	357, 358,
			13	359
			14	375

TABLE 6E.—REVISED DIAGNOSIS CODE TITLES

Diagnosis code	Description	CC	MDC	DRG
414.00	Coronary atherosclerosis of unspecified type of vessel, native or graft	N	5	132, 133
995.81	Adult physical abuse	N	21	454, 455
997.60	Amputation stump complication, unspecified complication	N	8	256
997.61	Amputation stump complication, neuroma of amputation stump	N	8	256
997.62	Amputation stump complication, infection (chronic)	Y	8	256
997.69	Amputation stump complication, not elsewhere classified	N	8	256

TABLE 6E.—REVISED DIAGNOSIS CODE TITLES—Continued

Diagnosis code	Description	CC	MDC	DRG
V61.20	Counseling for parent-child problem, unspecified	N	23	467
V61.21	Counseling for victim of child abuse	N	23	467
V67.4	Follow-up examination, following treatment of healed fracture	N	23	465, 466

TABLE 6F.—REVISED PROCEDURE CODE TITLES

Procedure code	Description	OR	MDC	DRG
59.11	Other lysis of perivesical adhesions	Y	11	308, 309
			12	344, 345
			13	365
			17	400, 406,
			17	407
			21	442, 443
			24	486
65.51	Other removal of both ovaries at same operative episode	Y	9	269, 270
			13	354, 355
			13	357, 358, 359
65.52	Other removal of remaining ovary	Y	9	269, 270
			13	354, 355
			13	357, 358, 359
65.61	Other removal of both ovaries and tubes at same operative episode	Y	9	269, 270
			13	354, 355,
			13	357, 358, 359
65.62	Other removal of remaining ovary and tube	Y	13	354, 355, 357, 358, 359
65.71	Other simple suture of ovary	Y	13	354, 355,
			13	357, 358,
			13	359
			21	442, 443
			24	486
65.72	Other reimplantation of ovary	Y	13	354, 355,
			13	357, 358,
			21	359
			24	442, 443, 486
65.73	Other salpingo-oophoroplasty	Y	11	308, 309,
			12	344, 345
			13	365
			17	400, 406,
			17	407
			21	442, 443
			24	486

TABLE 6G.—ADDITIONS TO THE CC EXCLUSIONS LIST

PAGE 1 OF 5 PAGES

CCs that are added to the list are in Table 6G—Additions to the CC Exclusions List. Each of the principal diagnoses is shown with an asterisk, and the revisions to the CC Exclusions List are provided in an indented column immediately following the affected principal diagnosis.

*0011	00844	*00800	00844	*0085	00844	*01133	*01182
00841	00845	00841	00845	00841	00845	4831	4831
00842	00846	00842	00846	00842	00846	*01134	*01183
00843	00847	00843	00847	00843	00847	4831	4831
00844	*0061	00844	*00841	00844	*0088	*01135	*01184
00845	00841	00845	00841	00845	00841	4831	4831
00846	00842	00846	00842	00846	00842	*01136	*01185
00847	00843	00847	00843	00847	00843	4831	4831
*0020	00844	*00801	00844	*00861	00844	*01140	*01186
00841	00845	00841	00845	00841	00845	4831	4831
00842	00846	00842	00846	00842	00846	*01141	*01190
00843	00847	00843	00847	00843	00847	4831	4831
00844	*0062	00844	*00842	00844	*0090	*01142	*01191
00845	00841	00845	00841	00845	00841	4831	4831
00846	00842	00846	00842	00846	00842	*01143	*01192
00847	00843	00847	00843	00847	00843	4831	4831
*0029	00844	*00802	00844	*00862	00844	*01144	*01193
00841	00845	00841	00845	00841	00845	4831	4831
00842	00846	00842	00846	00842	00846	*01145	*01194
00843	00847	00843	00847	00843	00847	4831	4831
00844	*0069	00844	*00843	00844	*01100	*01146	*01195
00845	00841	00845	00841	00845	4831	4831	4831
00846	00842	00846	00842	00846	*01101	*01150	*01196
00847	00843	00847	00843	00847	4831	4831	4831
*0030	00844	*00803	00844	*00863	*01102	*01151	*01200
00841	00845	00841	00845	00841	4831	4831	4831
00842	00846	00842	00846	00842	*01103	*01152	*01201
00843	00847	00843	00847	00843	4831	4831	4831
00844	*0071	00844	*00844	00844	*01104	*01153	*01202
00845	00841	00845	00841	00845	4831	4831	4831
00846	00842	00846	00842	00846	*01105	*01154	*01203
00847	00843	00847	00843	00847	4831	4831	4831
*0049	00844	*00804	00844	*00864	*01106	*01155	*01204
00841	00845	00841	00845	00841	4831	4831	4831
00842	00846	00842	00846	00842	*01110	*01156	*01205
00843	00847	00843	00847	00843	4831	4831	4831
00844	*0072	00844	*00845	00844	*01111	*01160	*01206
00845	00841	00845	00841	00845	4831	4831	4831
00846	00842	00846	00842	00846	*01112	*01161	*01210
00847	00843	00847	00843	00847	4831	4831	4831
*0050	00844	*00809	00844	*00865	*01113	*01162	*01211
00841	00845	00841	00845	00841	4831	4831	4831
00842	00846	00842	00846	00842	*01114	*01163	*01212
00843	00847	00843	00847	00843	4831	4831	4831
00844	*0073	00844	*00846	00844	*01115	*01164	*01213
00845	00841	00845	00841	00845	4831	4831	4831
00846	00842	00846	00842	00846	*01116	*01165	*01214
00847	00843	00847	00843	00847	4831	4831	4831
*0051	00844	*0081	00844	*00866	*01120	*01166	*01215
00841	00845	00841	00845	00841	4831	4831	4831
00842	00846	00842	00846	00842	*01121	*01170	*01216
00843	00847	00843	00847	00843	4831	4831	4831
00844	*0078	00844	*00847	00844	*01122	*01171	*01280
00845	00841	00845	00841	00845	4831	4831	4831
00846	00842	00846	00842	00846	*01123	*01172	*01281
00847	00843	00847	00843	00847	4831	4831	4831
*0052	00844	*0082	00844	*00867	*01124	*01173	*01282
00841	00845	00841	00845	00841	4831	4831	4831
00842	00846	00842	00846	00842	*01125	*01174	*01283
00843	00847	00843	00847	00843	4831	4831	4831
00844	*0079	00844	*00849	00844	*01126	*01175	*01284
00845	00841	00845	00841	00845	4831	4831	4831
00846	00842	00846	00842	00846	*01130	*01176	*01285
00847	00843	00847	00843	00847	4831	4831	4831
*0060	00844	*0083	00844	*00869	*01131	*01180	*01286
00841	00845	00841	00845	00841	4831	4831	4831
00842	00846	00842	00846	00842	*01132	*01181	*01480
00843	00847	00843	00847	00843	4831	4831	00841

PAGE 2 OF 5 PAGES

00842	4831	29382	29284	*29212	29383	29614	29181
00843	*11285	29383	29289	29181	29384	29634	29189
00844	00841	29384	2929	29189	7105	29644	29384
00845	00842	30300	29381	29384	*29389	29654	*30420
00846	00843	30301	29382	*2922	29181	29664	29181
00847	00844	30302	29383	29181	29189	2980	29189
*01481	00845	30390	29384	29189	29384	2983	29384
00841	00846	30391	30300	29384	*2939	2984	*30421
00842	00847	30392	30301	*29281	29181	29900	29181
00843	*11505	30400	30302	29181	29189	29910	29189
00844	4831	30401	30390	29189	29384	29980	29384
00845	*11515	30402	30391	29384	*2940	29990	*30422
00846	4831	30410	30392	*29282	29181	*30300	29181
00847	*11595	30411	30400	29181	29189	29181	29189
*01482	4831	30412	30401	29189	29384	29189	29384
00841	*1221	30420	30402	29384	*2941	29384	*30423
00842	4831	30421	30410	*29283	29181	*30301	29181
00843	*129	30422	30411	29181	29189	29181	29189
00844	00841	30440	30412	29189	29384	29189	29384
00845	00842	30441	30420	29384	*2948	29384	*30430
00846	00843	30442	30421	*29284	29181	*30302	29181
00847	00844	30450	30422	29181	29189	29181	29189
*01483	00845	30451	30440	29189	29384	29189	29384
00841	00846	30452	30441	29384	*2949	29384	*30431
00842	00847	30460	30442	*29289	29181	*30303	29181
00843	*1304	30461	30450	29181	29189	29181	29189
00844	4831	30462	30451	29189	29384	29189	29384
00845	*1363	30470	30452	29384	*30082	29384	*30432
00846	4831	30471	30460	*2929	29500	*30390	29181
00847	*2910	30472	30461	29181	29501	29181	29189
*01484	29181	30480	30462	29189	29502	29189	29384
00841	29189	30481	30470	29384	29503	29384	*30433
00842	29384	30482	30471	*2930	29504	*30391	29181
00843	*2911	30490	30472	29181	29510	29181	29189
00844	29181	30491	30480	29189	29511	29189	29384
00845	29189	30492	30481	29384	29512	29384	*30440
00846	29384	30500	30482	*2931	29513	*30392	29181
00847	*2912	30501	30490	29181	29514	29181	29189
*01485	29181	30502	30491	29189	29521	29189	29384
00841	29189	30530	30492	29384	29522	29384	*30441
00842	29384	30531	30500	*29381	29523	*30393	29181
00843	*2913	30532	30501	29181	29524	29181	29189
00844	29181	30540	30502	29189	29530	29189	29384
00845	29189	30541	30530	29384	29531	29384	*30442
00846	29384	30542	30531	*29382	29532	*30400	29181
00847	*2914	30550	30532	29181	29533	29181	29189
*01486	29181	30551	30540	29189	29534	29189	29384
00841	29189	30552	30541	29384	29540	29384	*30443
00842	29384	30560	30542	*29383	29541	*30401	29181
00843	*2915	30561	30550	29181	29542	29181	29189
00844	29181	30562	30551	29189	29543	29189	29384
00845	29189	30570	30552	29384	29544	29384	*30450
00846	29384	30571	30560	*29384	29560	*30402	29181
00847	*29181	30572	30561	2910	29561	29181	29189
*01790	2910	30590	30562	2911	29562	29189	29384
4831	2911	30591	30570	2912	29563	29384	*30451
*01791	2912	30592	30571	2913	29564	*30403	29181
4831	2913	*29189	30572	2914	29570	29181	29189
*01792	2914	2910	30590	29181	29571	29189	29384
4831	29181	2911	30591	29189	29572	29384	*30452
*01793	29189	2912	30592	2919	29573	*30410	29181
4831	2919	2913	*2919	2920	29574	29181	29189
*01794	2920	2914	29181	29211	29580	29189	29384
4831	29211	29181	29189	29212	29581	29384	*30453
*01795	29212	29189	29384	2922	29582	*30411	29181
4831	2922	2919	*2920	29281	29583	29181	29189
*01796	29281	2920	29181	29282	29584	29189	29384
4831	29282	29211	29189	29283	29590	29384	*30460
*0212	29283	29212	29384	29284	29591	*30412	29181
4831	29284	2922	*29211	29289	29592	29181	29189
*0310	29289	29281	29181	2929	29593	29189	29384
4831	2929	29282	29189	29381	29594	29384	*30461
*0391	29381	29283	29384	29382	29604	*30413	29181

PAGE 3 OF 5 PAGES

29189	29384	*30562	29532	*48239	01180	5078	4831
29384	*30520	29181	29533	4831	01181	5080	*5062
*30462	29181	29189	29534	*4824	01182	5081	4831
29181	29189	29384	29540	4831	01183	5171	*5063
29189	29384	*30563	29541	*48281	01184	*4838	4831
29384	*30521	29181	29542	4831	01185	4831	*5064
*30463	29181	29189	29543	*48282	01186	*4841	4831
29181	29189	29384	29544	4831	01190	4831	*5069
29189	29384	*30570	29560	*48283	01191	*4843	4831
29384	*30522	29181	29561	4831	01192	4831	*5070
*30470	29181	29189	29562	*48289	01193	*4845	4831
29181	29189	29384	29563	4831	01194	4831	*5071
29189	29384	*30571	29564	*4829	01195	*4846	4831
29384	*30523	29181	29570	4831	01196	4831	*5078
*30471	29181	29189	29571	*4830	01200	*4847	4831
29181	29189	29384	29572	4831	01201	4831	*5080
29189	29384	*30572	29573	*4831	01202	*4848	4831
29384	*30530	29181	29574	01100	01203	4831	*5081
*30472	29181	29189	29580	01101	01204	*485	4831
29181	29189	29384	29581	01102	01205	4831	*5088
29189	29384	*30573	29582	01103	01206	*486	4831
29384	*30531	29181	29583	01104	01210	4831	*5089
*30473	29181	29189	29584	01105	01211	*4870	4831
29181	29189	29384	29590	01106	01212	4831	*5171
29189	29384	*30580	29591	01110	01213	*4871	4831
29384	*30532	29181	29592	01111	01214	4831	*5178
*30480	29181	29189	29593	01112	01215	*4878	4831
29181	29189	29384	29594	01113	01216	00841	*51889
29189	29384	*30581	29604	01114	0310	00842	4831
29384	*30533	29181	29614	01115	11505	00843	*5198
*30481	29181	29189	29634	01116	11515	00844	4831
29181	29189	29384	29644	01120	1304	00845	*5199
29189	29384	*30582	29654	01121	1363	00846	4831
29384	*30540	29181	29664	01122	481	00847	*53081
*30482	29181	29189	2980	01123	4820	*494	99811
29181	29189	29384	2983	01124	4821	4831	99812
29189	29384	*30583	2984	01125	4822	*4950	99813
29384	*30541	29181	29900	01126	48230	4831	*53082
*30483	29181	29189	29910	01130	48231	*4951	99811
29181	29189	29384	29980	01131	48232	4831	99812
29189	29384	*30590	29990	01132	48239	*4952	99813
29384	*30542	29181	*4560	01133	4824	4831	*53083
*30490	29181	29189	99811	01134	48281	*4953	99811
29181	29189	29384	99812	01135	48282	4831	99812
29189	29384	*30591	99813	01136	48283	*4954	99813
29384	*30543	29181	*45620	01140	48289	4831	*53089
*30491	29181	29189	99811	01141	4829	*4955	99811
29181	29189	29384	99812	01142	4830	4831	99812
29189	29384	*30592	99813	01143	4831	*4956	99813
29384	*30550	29181	*4800	01144	4838	4831	*53100
*30492	29181	29189	4831	01145	4841	*4957	99811
29181	29189	29384	*4801	01146	4843	4831	99812
29189	29384	*30593	4831	01150	4845	*4958	99813
29384	*30551	29181	*4802	01151	4846	4831	*53101
*30493	29181	29189	4831	01152	4847	*4959	99811
29181	29189	29384	*4808	01153	4848	4831	99812
29189	29384	*31532	4831	01154	485	*496	99813
29384	*30552	29500	*4809	01155	486	4831	*53120
*30500	29181	29501	4831	01156	4870	*500	99811
29181	29189	29502	*481	01160	4950	4831	99812
29189	29384	29503	4831	01161	4951	*501	99813
29384	*30553	29504	*4820	01162	4952	4831	*53121
*30501	29181	29510	4831	01163	4953	*502	99811
29181	29189	29511	*4821	01164	4954	4831	99812
29189	29384	29512	4831	01165	4955	*503	99813
29384	*30560	29513	*4822	01166	4956	4831	*53140
*30502	29181	29514	4831	01170	4957	*504	99811
29181	29189	29521	*48230	01171	4958	4831	99812
29189	29384	29522	4831	01172	4959	*505	99813
29384	*30561	29523	*48231	01173	5060	4831	*53141
*30503	29181	29524	4831	01174	5061	*5060	99811
29181	29189	29530	*48232	01175	5070	4831	99812
29189	29384	29531	4831	01176	5071	*5061	99813

PAGE 4 OF 5 PAGES

*53160	99811	00846	00843	00844	57431	57400	57400
99811	99812	00847	00844	00845	57440	57401	57401
99812	99813	*53783	00845	00846	57441	57410	57410
99813	*53401	99811	00846	00847	57450	57411	57411
*53161	99811	99812	00847	*56202	57451	57421	57421
99811	99812	99813	*5565	99811	57460	57430	57430
99812	99813	*5550	00841	99812	57461	57431	57431
99813	*53420	00841	00842	99813	57470	57440	57440
*53200	99811	00842	00843	*56203	57471	57441	57441
99811	99812	00843	00844	99811	57490	57450	57450
99812	99813	00844	00845	99812	57491	57451	57451
99813	*53421	00845	00846	99813	5750	57470	57460
*53201	99811	00846	00847	*56212	*57461	57471	57461
99811	99812	00847	*5566	99811	57400	57480	57470
99812	99813	*5551	00841	99812	57401	57481	57471
99813	*53440	00841	00842	99813	57410	57490	57480
*53220	99811	00842	00843	*56213	57411	57491	57481
99811	99812	00843	00844	99811	57421	5750	57490
99812	99813	00844	00845	99812	57430	*57490	57491
99813	*53441	00845	00846	99813	57431	57430	5750
*53221	99811	00846	00847	*5641	57440	57431	57512
99811	99812	00847	*5568	00841	57441	57440	*57512
99812	99813	*5552	00841	00842	57450	57441	57400
99813	*53460	00841	00842	00843	57451	57450	57401
*53240	99811	00842	00843	00844	57460	57451	57410
99811	99812	00843	00844	00845	57461	57470	57411
99812	99813	00844	00845	00846	57470	57471	57421
99813	*53461	00845	00846	00847	57471	57490	57430
*53241	99811	00846	00847	*5693	57490	57491	57431
99811	99812	00847	*5569	99811	57491	*57491	57440
99812	99813	*5559	00841	99812	5750	57430	57441
99813	*53501	00841	00842	99813	*57470	57431	57450
*53260	99811	00842	00843	*56985	57430	57440	57451
99811	99812	00843	00844	99811	57431	57441	57460
99812	99813	00844	00845	99812	57440	57450	57461
99813	*53511	00845	00846	99813	57441	57451	57470
*53261	99811	00846	00847	*57430	57450	57470	57471
99811	99812	00847	*5570	57470	57451	57471	57480
99812	99813	*5560	00841	57471	57470	57490	57481
99813	*53521	00841	00842	57490	57471	57491	57490
*53300	99811	00842	00843	57491	57490	*5750	57491
99811	99812	00843	00844	*57431	57491	57460	5750
99812	99813	00844	00845	57470	*57471	57461	57512
99813	*53531	00845	00846	57471	57430	57470	*5759
*53301	99811	00846	00847	57490	57431	57471	57460
99811	99812	00847	*5571	57491	57440	57480	57461
99812	99813	*5561	00841	*57440	57441	57481	57480
99813	*53541	00841	00842	57470	57450	57490	57481
*53320	99811	00842	00843	57471	57451	57491	57512
99811	99812	00843	00844	57490	57470	57512	*5768
99812	99813	00844	00845	57491	57471	*57510	57460
99813	*53551	00845	00846	*57441	57490	57400	57461
*53321	99811	00846	00847	57470	57491	57401	57470
99811	99812	00847	*5579	57471	*57480	57410	57471
99812	99813	*5562	00841	57490	57400	57411	57480
99813	*53561	00841	00842	57491	57401	57421	57481
*53340	99811	00842	00843	*57450	57410	57430	57490
99811	99812	00843	00844	57470	57411	57431	57491
99812	99813	00844	00845	57471	57421	57440	57512
99813	*5363	00845	00846	57490	57430	57441	*5769
*53341	00841	00846	00847	57491	57431	57450	57460
99811	00842	00847	*5582	*57451	57440	57451	57461
99812	00843	*5563	00841	57470	57441	57460	57470
99813	00844	00841	00842	57471	57450	57461	57471
*53360	00845	00842	00843	57490	57451	57470	57480
99811	00846	00843	00844	57491	57470	57471	57481
99812	00847	00844	00845	*57460	57471	57480	57490
99813	*5368	00845	00846	57400	57480	57481	57491
*53361	00841	00846	00847	57401	57481	57490	57512
99811	00842	00847	*5589	57410	57490	57491	*5780
99812	00843	*5564	00841	57411	57491	5750	99811
99813	00844	00841	00842	57421	5750	57512	99812
*53400	00845	00842	00843	57430	*57481	*57511	99813

*5781
99811
99812
99813
*5789
99811
99812
99813
*74861
4831
*75261
5970
5981
5982
5994
*75262
5970
5981
5982
5994
*75263
5970
5981
5982
5994
*75264
5970
5981
5982
5994
*75265
5970
5981
5982
5994
*75269
5970
5981
5982
5994
*75320
5845
5846
5847
5849
585
5996
78820
78829
*75321
5845
5846
5847
5849
585
5996
78820
78829
*75322
5845
5846
5847
5849
585
5996
78820
78829
*75323
5845
5846
5847
5849
585
5996
78820
78829
*75329
5845
5846
5847
5849
585
5996
78820
78829
*7724
99811
99812
99813
*7750
00841
00842
00843
00844
00845
00846
00847
*7751
00841
00842
00843
00844
00845
00846
00847
*7752
00841
00842
00843
00844
00845
00846
00847
*7753
00841
00842
00843
00844
00845
00846
00847
*7754
00841
00842
00843
00844
00845
00846
00847
*7755
00841
00842
00843
00844
00845
00846
00847
*7756
00841
00842
00843
00844
00845
00846
00847
*7757
00841
00842
00843
00844
00845
00846
00847
*7758
00841
00842
00843
00844
00845
00846
00847
*7759
00841
00842
00843
00844
00845
00846
00847
*7775
00841
00842
00843
00844
00845
00846
00847
*7778
00841
00842
00843
00844
00845
00846
00847
*7903
29181
29189
29384
*99791
99811
99812
99813
99851
99859
99883
*99799
99811
99812
99813
99851
99859
99883
*9980
99811
99812
99813
*99811
9585
9954
9980
99811
99812
99813
*99812
9585
9954
9980
99811
99812
99813
99851
99859
99883
*99813
9585
9954
9980
99812
99813
*99813
9585
9954
9980
99811
99812
99813
*99851
99851
99859
*99859
99851
99859
*99881
99811
99812
99813
99851
99859
99883
*99883
9580
9581
9582
9583
9584
9585
9587
9954
99600
99601
99602
99603
99604
99609
9961
9962
99630
99639
9964
99660
99661
99662
99663
99664
99665
99666
99667
99669
99670
99671
99672
99673
99674
99675
99676
99677
99678
99679
99690
99691
99692
99693
99694
99695
99696
99699
99700
99701
99702
99709
9971
9972
9973
9974
9975
99762
99799
9980
9982
9983
9984
9986
9987
99883
99889
9989
*99889
99811
99812
99813
99851
99859
99883
*9989
99811
99812
99813
99851
99859
99883

TABLE 6H.—DELETIONS TO THE CC EXCLUSIONS LIST

PAGE 1 OF 1 PAGE

CCs that are deleted from the list are in Table 6H—Deletions to the CC Exclusions List. Each of the principal diagnoses is shown with an asterisk, and the revisions to the CC Exclusions List are provided in an indented column immediately following the affected principal diagnosis.

*2910	30502	2918	2918	2918	9981	57421
2918	30530	*30303	*30471	*30563	*53261	57430
*2911	30531	2918	2918	2918	9981	57431
2918	30532	*30390	*30472	*30570	*53300	57440
*2912	30540	2918	2918	2918	9981	57441
2918	30541	*30391	*30473	*30571	*53301	57450
*2913	30542	2918	2918	2918	9981	57451
2918	30550	*30392	*30480	*30572	*53320	5750
*2914	30551	2918	2918	2918	9981	*5780
2918	30552	*30393	*30481	*30573	*53321	9981
*2915	30560	2918	2918	2918	9981	*5781
2918	30561	*30400	*30482	*30580	*53340	9981
*2918	30562	2918	2918	2918	9981	*5789
2910	30570	*30401	*30483	*30581	*53341	9981
2911	30571	2918	2918	2918	9981	*7526
2912	30572	*30402	*30490	*30582	*53360	5970
2913	30590	2918	2918	2918	9981	5981
2914	30591	*30403	*30491	*30583	*53361	5982
2918	30592	2918	2918	2918	9981	5994
2919	*2919	*30410	*30492	*30590	*53400	*7532
2920	2918	2918	2918	2918	9981	5845
29211	*2920	*30411	*30493	*30591	*53401	5846
29212	2918	2918	2918	2918	9981	5847
2922	*29211	*30412	*30500	*30592	*53420	5849
29281	2918	2918	2918	2918	9981	585
29282	*29212	*30413	*30501	*30593	*53421	5996
29283	2918	2918	2918	2918	9981	78820
29284	*2922	*30420	*30502	*4560	*53440	78829
29289	2918	2918	2918	9981	9981	*7724
2929	*29281	*30421	*30503	*45620	*53441	9981
29381	2918	2918	2918	9981	9981	*7903
29382	*29282	*30422	*30520	*53081	*53460	2918
29383	2918	2918	2918	9981	9981	*99791
30300	*29283	*30423	*30521	*53082	*53461	9981
30301	2918	2918	2918	9981	9981	9985
30302	*29284	*30430	*30522	*53083	*53501	*99799
30390	2918	2918	2918	9981	9981	9981
30391	*29289	*30431	*30523	*53089	*53511	9985
30392	2918	2918	2918	9981	9981	*9980
30400	*2929	*30432	*30530	*53100	*53521	9981
30401	2918	2918	2918	9981	9981	*9981
30402	*2930	*30433	*30531	*53101	*53531	9585
30410	2918	2918	2918	9981	9981	9954
30411	*2931	*30440	*30532	*53120	*53541	9980
30412	2918	2918	2918	9981	9981	9981
30420	*29381	*30441	*30533	*53121	*53551	*9985
30421	2918	2918	2918	9981	9981	9985
30422	*29382	*30442	*30540	*53140	*53561	*99881
30440	2918	2918	2918	9981	9981	9981
30441	*29383	*30443	*30541	*53141	*53783	9985
30442	2918	2918	2918	9981	9981	*99889
30450	*29389	*30450	*30542	*53160	*56202	9981
30451	2918	2918	2918	9981	9981	9985
30452	*2939	*30451	*30543	*53161	*56203	*9989
30460	2918	2918	2918	9981	9981	9981
30461	*2940	*30452	*30550	*53200	*56212	9985
30462	2918	2918	2918	9981	9981	
30470	*2941	30453	*30551	*53201	*56213	
30471	2918	2918	2918	9981	9981	
30472	*2948	*30460	*30552	*53220	*5693	
30480	2918	2918	2918	9981	9981	
30481	*2949	*30461	*30553	*53221	*56985	
30482	2918	2918	2918	9981	9981	
30490	*30300	*30462	*30560	*53240	*5751	
30491	2918	2918	2918	9981	57400	
30492	*30301	*30463	*30561	*53241	57401	
30500	2918	2918	2918	9981	57410	
30501	*30302	*30470	*30562	*53260	57411	

TABLE 7A.—MEDICARE PROSPECTIVE PAYMENT SYSTEM SELECTED PERCENTILE LENGTHS OF STAY

[FY95 MEDPAR Update 12/95 Grouper V13.0]

DRG	Number discharges	Arithmetic mean LOS	10th percentile	25th percentile	50th percentile	75th percentile	90th percentile
1	32723	11.0372	3	4	8	14	23
2	6165	11.5178	3	5	8	14	23
3	1	10.0000	10	10	10	10	10
4	5866	9.1202	2	3	6	11	20
5	95896	4.4060	2	2	3	5	9
6	444	3.3581	1	1	2	4	7
7	10526	12.5752	3	5	8	14	25
8	2248	4.1348	1	1	3	5	9
9	1655	7.5287	2	3	5	9	16
10	19194	7.9610	2	3	6	10	16
11	2866	4.9215	1	2	4	6	10
12	23355	7.5868	2	3	5	9	14
13	5969	6.2406	2	4	5	7	11
14	351205	7.4178	2	3	6	9	14
15	138882	4.4367	1	2	3	5	8
16	11877	6.5858	2	3	5	8	12
17	3217	4.0258	1	2	3	5	7
18	22783	6.3682	2	3	5	8	12
19	7433	4.5271	1	2	4	6	8
20	5990	11.2129	3	5	9	15	22
21	1114	7.8905	2	3	6	10	16
22	2585	4.8584	2	2	4	6	9
23	5720	5.0336	1	2	4	6	10
24	53620	5.8059	2	3	4	7	11
25	21830	3.8592	1	2	3	5	7
26	46	4.6087	1	2	3	6	10
27	3475	6.2774	1	1	4	7	15
28	11179	7.0945	1	3	5	9	14
29	3684	4.0581	1	2	3	5	8
31	3167	5.4436	1	2	4	6	10
32	1723	3.1573	1	1	2	4	6
34	16272	6.4700	2	3	5	8	12
35	3648	4.2928	1	2	3	5	8
36	9010	1.5970	1	1	1	2	3
37	1878	4.0213	1	1	3	5	8
38	234	2.5385	1	1	2	3	5
39	3289	1.9663	1	1	1	2	4
40	2779	3.3843	1	1	2	4	7
42	7351	2.2049	1	1	1	2	5
43	97	4.0928	1	2	3	5	8
44	1614	5.7038	2	3	5	7	10
45	2412	3.8163	1	2	3	5	7
46	2952	5.4814	1	2	4	7	10
47	1333	3.7802	1	2	3	5	7
49	2139	5.6396	1	2	4	7	11
50	3347	2.1138	1	1	2	2	3
51	308	2.9870	1	1	1	3	7
52	78	3.6282	1	1	2	3	8
53	3340	3.5548	1	1	2	4	8
54	1	1.0000	1	1	1	1	1
55	1924	2.9569	1	1	2	3	6
56	704	2.7514	1	1	2	3	6
57	637	4.0973	1	1	3	5	8
59	88	3.7045	1	1	2	4	7
60	3	1.0000	1	1	1	1	1
61	217	5.2535	1	1	2	7	14
62	1	2.0000	2	2	2	2	2
63	3996	4.6652	1	2	3	5	10
64	3351	7.5067	1	2	5	9	16
65	29525	3.4147	1	2	3	4	6
66	6479	3.5658	1	2	3	4	6
67	510	4.2039	2	2	3	5	8
68	9443	4.7605	2	3	4	6	9
69	3062	3.7606	1	2	3	5	7
70	30	3.0667	1	2	3	3	5
71	90	4.1556	1	2	3	5	8
72	561	4.3529	1	2	3	5	9
73	6017	4.9493	1	2	4	6	9
75	39401	11.1088	4	6	8	14	21
76	38785	12.4555	3	6	10	15	24

TABLE 7A.—MEDICARE PROSPECTIVE PAYMENT SYSTEM SELECTED PERCENTILE LENGTHS OF STAY—Continued

[FY95 MEDPAR Update 12/95 Grouper V13.0]

DRG	Number discharges	Arithmetic mean LOS	10th percentile	25th percentile	50th percentile	75th percentile	90th percentile
77	2331	5.5268	1	2	4	8	12
78	28979	8.2306	4	5	7	10	13
79	207606	9.2488	3	5	7	11	17
80	8932	6.6160	2	4	5	8	12
81	9	7.2222	1	2	6	11	12
82	68573	7.8881	2	3	6	10	16
83	6976	6.3817	2	3	5	8	12
84	1430	3.7217	1	2	3	5	7
85	18398	7.3317	2	3	6	9	14
86	1372	4.5117	1	2	4	6	9
87	58612	6.7959	1	3	6	9	13
88	345365	6.0658	2	3	5	7	11
89	415072	7.0754	3	4	6	9	12
90	40306	5.1392	2	3	4	6	9
91	50	4.5800	2	2	3	6	8
92	11849	7.2524	2	4	6	9	13
93	1262	4.9374	1	3	4	6	9
94	12531	7.0527	2	3	5	9	14
95	1365	4.1341	1	2	3	5	8
96	60887	5.5101	2	3	5	7	10
97	25835	4.2614	2	2	4	5	7
98	19	4.4737	1	1	3	6	10
99	25241	3.4914	1	2	3	4	7
100	10191	2.4244	1	1	2	3	4
101	19810	5.1725	1	2	4	7	10
102	4399	3.1298	1	1	2	4	6
103	445	39.3528	10	15	29	53	80
104	22854	14.5510	6	8	12	18	26
105	19821	10.9286	5	7	9	13	19
106	96166	11.7202	6	8	10	14	19
107	61255	8.8314	5	6	7	10	14
108	6560	12.5834	4	7	10	15	23
110	59173	10.7795	3	6	9	13	20
111	5800	6.6512	3	5	6	8	10
112	191511	4.6987	1	2	4	6	9
113	45003	14.3320	4	6	10	17	28
114	8788	9.4467	2	4	7	12	18
115	10395	11.3715	4	6	9	14	20
116	81298	5.4177	1	2	4	7	11
117	4482	4.1142	1	1	2	5	8
118	6687	3.1952	1	1	2	4	7
119	1705	5.4985	1	1	3	7	13
120	40465	9.1860	1	2	6	12	21
121	158928	7.4120	2	4	6	9	13
122	87089	5.0036	1	3	5	6	9
123	46281	4.6510	1	1	2	6	11
124	138564	4.8885	1	2	4	6	9
125	59232	3.0694	1	1	2	4	6
126	4619	13.9985	4	7	11	17	29
127	670461	6.2113	2	3	5	8	12
128	19612	6.7259	3	4	6	8	11
129	4584	3.4271	1	1	1	4	9
130	91826	6.6818	2	4	6	8	12
131	25592	5.1808	1	3	5	7	8
132	127274	3.5716	1	2	3	4	6
133	5813	2.9696	1	1	2	4	5
134	28493	3.9142	1	2	3	5	7
135	7141	4.9779	1	2	4	6	9
136	1014	3.2209	1	2	3	4	6
138	195932	4.5466	1	2	3	6	8
139	67345	2.9337	1	1	2	4	5
140	175930	3.4831	1	2	3	4	6
141	76111	4.4923	1	2	3	5	8
142	35701	3.1999	1	2	2	4	6
143	132318	2.6077	1	1	2	3	5
144	66761	5.6816	1	2	4	7	11
145	6735	3.2413	1	1	2	4	6
146	8626	11.2570	6	7	9	13	18
147	1624	7.3651	4	6	7	9	11
148	140141	13.4097	6	8	11	16	24

TABLE 7A.—MEDICARE PROSPECTIVE PAYMENT SYSTEM SELECTED PERCENTILE LENGTHS OF STAY—Continued

[FY95 MEDPAR Update 12/95 Grouper V13.0]

DRG	Number discharges	Arithmetic mean LOS	10th percentile	25th percentile	50th percentile	75th percentile	90th percentile
149	15769	7.7194	4	6	7	9	11
150	22516	11.6884	4	7	10	14	21
151	4518	6.4748	2	4	6	8	11
152	4469	9.0257	4	6	8	10	15
153	1710	6.1655	3	4	6	8	9
154	35661	14.9524	5	8	12	18	28
155	4557	5.8824	2	3	5	8	10
156	4	15.7500	4	4	10	22	27
157	11419	5.7824	1	2	4	7	11
158	5082	2.9124	1	1	2	4	6
159	17132	5.3155	1	2	4	7	10
160	9971	2.9553	1	1	2	4	5
161	14786	4.3655	1	2	3	5	9
162	7990	2.1914	1	1	2	3	4
163	5	2.2000	1	1	1	3	5
164	4995	9.2993	4	6	8	11	16
165	1674	5.7575	3	4	5	7	9
166	3283	5.7286	2	3	4	7	10
167	2284	3.2439	1	2	3	4	6
168	1739	4.8562	1	2	3	6	10
169	1025	2.5473	1	1	2	3	5
170	12463	12.4436	2	5	9	15	25
171	1157	5.4105	1	2	4	7	11
172	30820	8.1481	2	3	6	10	16
173	2188	4.2870	1	2	3	5	9
174	231782	5.5456	2	3	4	7	10
175	23071	3.5073	1	2	3	4	6
176	16011	6.1346	2	3	5	7	11
177	11991	4.9873	2	3	4	6	9
178	4174	3.6195	1	2	3	5	7
179	11198	7.1657	2	4	6	9	14
180	79145	6.0471	2	3	5	7	11
181	22152	3.9606	1	2	3	5	7
182	226099	4.9591	2	2	4	6	9
183	72147	3.4552	1	2	3	4	6
184	67	3.7463	1	2	2	4	6
185	3804	5.1966	1	2	4	6	10
186	1	2.0000	2	2	2	2	2
187	832	4.2524	1	2	3	6	8
188	61112	6.1262	2	3	5	8	12
189	7787	3.6773	1	1	3	5	7
190	62	4.8548	1	3	4	6	10
191	10459	16.1606	5	8	12	20	32
192	880	7.9625	2	4	7	9	14
193	8477	13.8662	5	8	11	17	25
194	805	8.4348	3	5	7	10	15
195	9196	10.4533	4	6	9	12	18
196	796	6.7651	3	4	6	8	11
197	28016	9.1380	4	5	7	11	16
198	7906	4.9586	2	3	4	6	8
199	2208	11.1005	3	5	9	14	22
200	1525	11.8413	2	4	8	14	25
201	1466	16.5750	4	7	13	21	34
202	25094	7.6794	2	3	6	9	15
203	28743	7.6566	2	3	6	10	15
204	49035	6.6942	2	3	5	8	13
205	21512	7.2152	2	3	5	9	14
206	1692	4.7305	1	2	4	6	10
207	35330	5.7193	2	3	4	7	11
208	10251	3.4474	1	2	3	4	6
209	328015	6.6569	3	4	6	7	10
210	131592	8.5557	4	5	7	10	14
211	25325	6.2610	3	4	6	7	10
212	9	5.0000	2	3	4	5	8
213	6788	9.6117	3	4	7	12	19
214	51282	6.4551	2	3	5	8	12
215	41115	3.6816	1	2	3	5	7
216	6435	11.0449	2	5	8	14	22
217	19341	15.2991	3	6	10	18	31
218	21844	6.2064	2	3	5	7	11

TABLE 7A.—MEDICARE PROSPECTIVE PAYMENT SYSTEM SELECTED PERCENTILE LENGTHS OF STAY—Continued

[FY95 MEDPAR Update 12/95 Grouper V13.0]

DRG	Number discharges	Arithmetic mean LOS	10th percentile	25th percentile	50th percentile	75th percentile	90th percentile
219	17973	3.7492	1	2	3	5	6
220	2	5.5000	5	5	6	6	6
221	4962	8.1475	2	4	6	10	16
222	3560	4.0573	1	2	3	5	8
223	18306	2.8650	1	1	2	3	5
224	7946	2.2699	1	1	2	3	4
225	6199	5.0045	1	2	3	6	11
226	5349	6.7080	1	2	4	8	14
227	4604	2.9622	1	1	2	4	6
228	3014	3.5551	1	1	2	4	7
229	1345	2.4007	1	1	2	3	5
230	2455	5.1548	1	2	3	6	11
231	10331	5.0624	1	2	3	6	11
232	576	4.5017	1	1	2	5	10
233	4538	8.9595	2	4	7	11	18
234	2220	4.1730	1	2	3	5	8
235	5543	6.7231	1	3	4	7	13
236	37803	6.2862	2	3	5	7	12
237	1510	4.4139	1	2	3	5	8
238	7538	10.0649	3	5	7	12	19
239	59581	7.6027	2	4	6	9	14
240	12047	7.4987	2	3	5	9	15
241	3019	4.6277	1	2	4	6	9
242	2528	7.6606	2	4	6	9	15
243	79979	5.6107	2	3	4	7	10
244	11456	5.8092	2	3	4	7	11
245	4259	4.2158	1	2	3	5	8
246	1312	4.5899	1	2	4	6	9
247	10591	3.9716	1	2	3	5	8
248	6767	5.2815	1	2	4	6	10
249	10077	4.2995	1	2	3	5	9
250	3178	4.9091	1	2	3	6	9
251	2090	3.2933	1	1	3	4	6
252	1	1.0000	1	1	1	1	1
253	17469	5.8164	2	3	4	7	11
254	9208	3.8588	1	2	3	5	7
255	1	2.0000	2	2	2	2	2
256	4600	5.7178	1	2	4	7	11
257	23640	3.4239	1	2	3	4	6
258	18784	2.4905	1	2	2	3	4
259	4010	3.5077	1	1	2	3	7
260	4868	1.8683	1	1	1	2	3
261	2334	2.3500	1	1	2	3	4
262	712	3.9284	1	1	2	5	8
263	29088	13.8669	4	6	10	16	28
264	3559	8.3442	2	4	6	10	17
265	4274	7.6467	1	2	5	9	16
266	2712	3.6855	1	1	3	5	7
267	222	4.0811	1	1	3	5	9
268	891	4.0000	1	1	2	4	9
269	10173	9.1218	2	3	7	12	18
270	3456	3.3958	1	1	2	4	8
271	21515	8.4984	3	4	7	10	15
272	5863	7.4481	2	3	6	9	14
273	1426	5.5035	2	2	4	7	11
274	2526	7.7458	2	3	5	9	15
275	250	3.5040	1	1	2	4	8
276	889	5.0472	1	2	4	6	9
277	79054	6.7240	3	4	5	8	12
278	26008	5.1420	2	3	4	6	9
279	5	4.8000	2	2	3	4	12
280	13098	5.1142	1	2	4	6	9
281	5890	3.6448	1	2	3	4	7
283	5233	5.4888	2	2	4	7	10
284	1755	3.8632	1	2	3	5	7
285	4886	13.5014	3	6	10	16	26
286	1918	8.7195	3	4	6	9	16
287	6284	13.3908	3	6	9	16	26
288	957	7.0449	2	4	5	7	11
289	4992	3.9732	1	2	2	4	8

TABLE 7A.—MEDICARE PROSPECTIVE PAYMENT SYSTEM SELECTED PERCENTILE LENGTHS OF STAY—Continued

[FY95 MEDPAR Update 12/95 Grouper V13.0]

DRG	Number discharges	Arithmetic mean LOS	10th percentile	25th percentile	50th percentile	75th percentile	90th percentile
290	8514	2.8404	1	1	2	3	5
291	86	1.7558	1	1	1	2	3
292	5046	12.6958	2	5	9	16	25
293	294	6.4456	1	3	5	8	14
294	86024	5.6681	2	3	4	7	10
295	3712	4.2826	1	2	3	5	8
296	218940	6.3561	2	3	5	8	12
297	31455	4.2781	1	2	3	5	8
298	95	3.0211	1	1	2	4	5
299	868	5.3652	1	2	4	7	10
300	14115	7.3032	2	3	6	9	14
301	2146	4.3877	1	2	3	6	9
302	7567	12.3190	6	7	9	14	21
303	18462	10.1938	4	6	8	12	18
304	12867	10.2970	3	5	7	13	21
305	2526	4.9097	1	3	4	6	9
306	11305	6.2204	2	2	4	8	13
307	2596	2.9819	1	2	2	3	5
308	9137	7.0113	1	2	5	9	15
309	3371	3.0009	1	1	2	4	6
310	28549	4.6077	1	2	3	6	9
311	9697	2.1734	1	1	2	3	4
312	1995	4.7895	1	2	3	6	10
313	745	2.2644	1	1	2	3	5
314	1	5.0000	5	5	5	5	5
315	27722	9.2695	1	2	6	12	20
316	69941	7.4958	2	3	6	9	15
317	779	2.8434	1	1	2	3	6
318	5981	7.1195	2	3	5	9	14
319	506	3.2174	1	1	2	4	7
320	169078	6.4297	2	3	5	8	11
321	25512	4.7020	2	3	4	6	8
322	81	4.3580	2	2	4	6	8
323	17690	3.5573	1	2	3	4	7
324	8755	2.0870	1	1	2	3	4
325	7381	4.5898	1	2	3	5	9
326	2186	3.4492	1	1	2	4	6
327	8	3.1250	1	2	2	2	4
328	817	4.2742	1	2	3	5	9
329	109	2.7523	1	1	2	3	5
330	1	1.0000	1	1	1	1	1
331	38181	6.1753	2	3	5	8	12
332	4687	3.8835	1	2	3	5	8
333	357	5.8319	1	3	4	7	13
334	19011	6.0503	3	4	5	7	9
335	9821	4.5786	2	3	4	6	7
336	60748	4.1251	1	2	3	5	8
337	38538	2.6717	1	2	2	3	4
338	4813	5.2703	1	2	3	6	11
339	2302	4.9392	1	2	3	6	10
340	2	3.0000	1	1	5	5	5
341	6427	3.2367	1	1	2	4	6
342	224	4.0089	1	1	2	5	8
344	3820	3.4652	1	1	2	4	7
345	1355	3.9734	1	2	3	4	9
346	5343	6.7477	1	3	5	8	14
347	418	3.3349	1	1	2	4	7
348	3021	4.8875	1	2	4	6	9
349	684	2.9956	1	1	2	4	6
350	6884	4.7451	2	3	4	6	8
352	576	3.9392	1	2	3	5	8
353	2621	8.3564	3	5	6	10	15
354	9693	6.3330	3	4	5	7	11
355	5607	3.8639	2	3	4	4	6
356	28647	3.0247	1	2	3	4	5
357	6526	9.8462	4	5	8	12	18
358	26797	4.7425	2	3	4	5	8
359	27392	3.2715	2	3	3	4	5
360	16717	3.5393	1	2	3	4	6
361	618	3.4644	1	1	2	4	7

TABLE 7A.—MEDICARE PROSPECTIVE PAYMENT SYSTEM SELECTED PERCENTILE LENGTHS OF STAY—Continued

[FY95 MEDPAR Update 12/95 Grouper V13.0]

DRG	Number discharges	Arithmetic mean LOS	10th percentile	25th percentile	50th percentile	75th percentile	90th percentile
363	4355	3.4953	1	2	2	3	6
364	1778	3.6310	1	1	2	5	8
365	2396	8.1123	2	3	5	10	18
366	4470	7.6707	2	3	5	10	16
367	544	3.3107	1	1	2	4	7
368	2285	6.9190	2	3	5	9	13
369	2409	3.7410	1	1	3	5	7
370	1083	5.5568	3	3	4	5	9
371	950	3.5874	2	3	3	4	5
372	809	3.3498	1	2	2	3	6
373	3637	1.9249	1	1	2	2	3
374	116	2.3621	1	2	2	2	3
375	5	2.2000	1	1	2	3	4
376	151	3.4834	1	1	2	4	8
377	26	3.2308	1	1	1	3	8
378	163	2.9755	1	2	3	3	5
379	309	2.9256	1	1	2	3	5
380	71	2.3239	1	1	2	3	4
381	194	2.2835	1	1	1	2	5
382	47	1.6596	1	1	1	1	3
383	1455	4.0460	1	2	3	5	8
384	123	3.3496	1	1	1	3	7
385	3	17.0000	1	1	1	49	49
389	24	10.6667	3	4	8	10	18
390	10	5.0000	1	2	3	6	9
392	2467	11.6700	4	6	8	15	24
394	1642	7.8831	1	2	5	9	16
395	65671	5.3672	1	2	4	7	10
396	18	3.9444	1	1	3	7	8
397	15421	6.0683	2	3	4	7	12
398	16602	6.5798	2	3	5	8	12
399	1424	4.4347	1	2	4	6	8
400	7470	10.3424	2	4	7	13	23
401	6368	12.3990	2	5	9	16	25
402	1542	4.6984	1	1	3	6	10
403	34812	9.2838	2	4	7	12	19
404	3946	5.0867	1	2	4	7	10
406	3264	11.1468	3	5	8	14	23
407	723	4.9267	1	2	4	6	9
408	2949	8.2035	1	2	5	10	18
409	5649	6.6516	2	3	4	6	14
410	85873	3.3544	1	2	3	4	5
411	50	2.5600	1	1	2	3	7
412	35	3.0857	1	1	2	4	8
413	8421	8.2956	2	3	6	10	17
414	797	5.2070	1	2	4	7	11
415	38804	15.6974	4	7	12	19	31
416	192133	8.2122	2	4	7	10	15
417	45	4.6222	1	2	4	7	10
418	18663	6.7433	2	3	5	8	13
419	15677	5.6580	2	3	4	7	10
420	2871	4.3006	2	2	4	5	8
421	11386	4.6473	2	2	4	6	8
422	89	3.6854	1	2	3	4	7
423	9118	8.6534	2	4	6	10	18
424	1990	17.7397	3	6	12	20	34
425	15247	4.8955	1	2	3	6	10
426	4721	5.4938	1	2	4	7	11
427	1773	5.2775	1	2	4	7	11
428	904	8.4303	1	3	5	10	18
429	38861	8.9079	2	3	6	10	17
430	53430	9.7495	2	4	7	12	19
431	190	7.4632	1	3	5	9	14
432	430	6.3395	1	2	4	6	11
433	7843	3.4051	1	1	2	4	7
434	20810	5.8148	2	3	4	7	11
435	15477	4.8166	1	3	4	6	8
436	2915	14.5413	4	8	14	21	28
437	14205	10.8943	4	6	10	14	20
439	867	8.9262	2	3	6	11	18

TABLE 7A.—MEDICARE PROSPECTIVE PAYMENT SYSTEM SELECTED PERCENTILE LENGTHS OF STAY—Continued

[FY95 MEDPAR Update 12/95 Grouper V13.0]

DRG	Number discharges	Arithmetic mean LOS	10th percentile	25th percentile	50th percentile	75th percentile	90th percentile
440	4751	9.7838	2	3	6	12	21
441	611	4.4386	1	1	2	4	7
442	13818	8.7372	1	3	6	11	18
443	3299	3.5335	1	1	2	5	7
444	3319	5.3203	1	3	4	6	10
445	1321	3.7858	1	2	3	5	7
446	1	1.0000	1	1	1	1	1
447	3816	2.7953	1	1	2	3	5
448	84	1.0000	1	1	1	1	1
449	28775	4.4101	1	2	3	5	9
450	6807	2.3364	1	1	2	3	5
451	7	6.1429	2	3	4	5	7
452	19382	5.4066	1	2	4	6	11
453	3636	3.1876	1	1	2	4	6
454	5132	5.1046	1	2	3	6	10
455	1092	2.8333	1	1	2	3	5
456	194	8.3711	1	1	4	9	21
457	127	4.7953	1	1	2	5	10
458	1550	16.9387	4	7	13	22	35
459	533	10.3471	2	4	7	13	22
460	2303	6.6309	1	3	5	8	13
461	3040	4.8862	1	1	2	5	12
462	9360	13.7955	5	6	12	18	26
463	11987	5.1410	1	2	4	6	10
464	3079	3.7347	1	2	3	5	7
465	197	3.9086	1	1	2	4	7
466	1838	4.6366	1	1	2	4	10
467	1722	4.1057	1	1	2	4	8
468	58649	15.1829	3	7	12	19	30
471	9111	8.0289	4	5	6	9	13
472	150	30.6667	2	9	28	41	62
473	8217	14.3113	2	4	8	21	35
475	89514	12.1394	2	5	10	16	24
476	6875	13.7876	3	7	11	17	25
477	28128	8.8453	1	3	6	11	18
478	117755	8.2916	1	3	6	10	17
479	17758	4.5591	1	2	4	6	9
480	359	29.7159	10	13	22	37	61
481	119	35.0000	21	23	30	39	59
482	6754	14.9011	5	8	11	17	28
483	36200	45.7958	15	23	37	56	84
484	327	15.3364	2	6	11	21	32
485	3165	11.5893	4	6	9	13	21
486	2045	13.3482	1	6	11	18	28
487	3765	8.8770	1	3	7	11	17
488	1593	17.5267	5	8	13	22	35
489	17612	10.3989	2	4	7	13	22
490	4999	6.5719	1	2	4	8	14
491	9441	4.2777	2	3	3	5	7
492	2029	17.3834	3	5	10	28	37
493	52260	5.8809	1	2	5	8	11
494	27127	2.4245	1	1	2	3	5
495	107	23.7944	10	13	18	29	41
	10571233						

TABLE 7B.—MEDICARE PROSPECTIVE PAYMENT SYSTEM SELECTED PERCENTILE LENGTHS OF STAY

[FY95 MEDPAR Update 12/95 Grouper V14.0]

DRG	Number discharges	Arithmetic mean LOS	10th percentile	25th percentile	50th percentile	75th percentile	90th percentile
1	32723	11.0372	3	4	8	14	23
2	6165	11.5178	3	5	8	14	23
3	1	10.0000	10	10	10	10	10
4	5866	9.1202	2	3	6	11	20
5	95896	4.4060	2	2	3	5	9
6	444	3.3581	1	1	2	4	7
7	10526	12.5752	3	5	8	14	25

TABLE 7B.—MEDICARE PROSPECTIVE PAYMENT SYSTEM SELECTED PERCENTILE LENGTHS OF STAY—Continued

[FY95 MEDPAR Update 12/95 Grouper V14.0]

DRG	Number discharges	Arithmetic mean LOS	10th percentile	25th percentile	50th percentile	75th percentile	90th percentile
8	2248	4.1348	1	1	3	5	9
9	1655	7.5287	2	3	5	9	16
10	19194	7.9610	2	3	6	10	16
11	2866	4.9215	1	2	4	6	10
12	23355	7.5868	2	3	5	9	14
13	5969	6.2406	2	4	5	7	11
14	351205	7.4178	2	3	6	9	14
15	138882	4.4367	1	2	3	5	8
16	11877	6.5858	2	3	5	8	12
17	3217	4.0258	1	2	3	5	7
18	22783	6.3682	2	3	5	8	12
19	7433	4.5271	1	2	4	6	8
20	5990	11.2129	3	5	9	15	22
21	1114	7.8905	2	3	6	10	16
22	2585	4.8584	2	2	4	6	9
23	5720	5.0336	1	2	4	6	10
24	53620	5.8059	2	3	4	7	11
25	21830	3.8592	1	2	3	5	7
26	46	4.6087	1	2	3	6	10
27	3475	6.2774	1	1	4	7	15
28	11179	7.0945	1	3	5	9	14
29	3684	4.0581	1	2	3	5	8
31	3167	5.4436	1	2	4	6	10
32	1723	3.1573	1	1	2	4	6
34	16272	6.4700	2	3	5	8	12
35	3648	4.2928	1	2	3	5	8
36	9010	1.5970	1	1	1	2	3
37	1878	4.0213	1	1	3	5	8
38	234	2.5385	1	1	2	3	5
39	3289	1.9663	1	1	1	2	4
40	2779	3.3843	1	1	2	4	7
42	7351	2.2049	1	1	1	2	5
43	97	4.0928	1	2	3	5	8
44	1614	5.7038	2	3	5	7	10
45	2412	3.8163	1	2	3	5	7
46	2952	5.4814	1	2	4	7	10
47	1333	3.7802	1	2	3	5	7
49	2139	5.6396	1	2	4	7	11
50	3347	2.1138	1	1	2	2	3
51	308	2.9870	1	1	1	3	7
52	78	3.6282	1	1	2	3	8
53	3340	3.5548	1	1	2	4	8
54	1	1.0000	1	1	1	1	1
55	1924	2.9569	1	1	2	3	6
56	704	2.7514	1	1	2	3	6
57	637	4.0973	1	1	3	5	8
59	88	3.7045	1	1	2	4	7
60	3	1.0000	1	1	1	1	1
61	217	5.2535	1	1	2	7	14
62	1	2.0000	2	2	2	2	2
63	3996	4.6652	1	2	3	5	10
64	3351	7.5067	1	2	5	9	16
65	29525	3.4147	1	2	3	4	6
66	6479	3.5658	1	2	3	4	6
67	510	4.2039	2	2	3	5	8
68	9443	4.7605	2	3	4	6	9
69	3062	3.7606	1	2	3	5	7
70	30	3.0667	1	2	3	3	5
71	90	4.1556	1	2	3	5	8
72	561	4.3529	1	2	3	5	9
73	6017	4.9493	1	2	4	6	9
75	39401	11.1088	4	6	8	14	21
76	38785	12.4555	3	6	10	15	24
77	2331	5.5268	1	2	4	8	12
78	28979	8.2306	4	5	7	10	13
79	207606	9.2488	3	5	7	11	17
80	8932	6.6160	2	4	5	8	12
81	9	7.2222	1	2	6	11	12
82	68573	7.8881	2	3	6	10	16
83	6976	6.3817	2	3	5	8	12

TABLE 7B.—MEDICARE PROSPECTIVE PAYMENT SYSTEM SELECTED PERCENTILE LENGTHS OF STAY—Continued

[FY95 MEDPAR Update 12/95 Grouper V14.0]

DRG	Number discharges	Arithmetic mean LOS	10th percentile	25th percentile	50th percentile	75th percentile	90th percentile
84	1430	3.7217	1	2	3	5	7
85	18398	7.3317	2	3	6	9	14
86	1372	4.5117	1	2	4	6	9
87	58612	6.7959	1	3	6	9	13
88	345365	6.0658	2	3	5	7	11
89	415072	7.0754	3	4	6	9	12
90	40306	5.1392	2	3	4	6	9
91	50	4.5800	2	2	3	6	8
92	11849	7.2524	2	4	6	9	13
93	1262	4.9374	1	3	4	6	9
94	12531	7.0527	2	3	5	9	14
95	1365	4.1341	1	2	3	5	8
96	60887	5.5101	2	3	5	7	10
97	25835	4.2614	2	2	4	5	7
98	19	4.4737	1	1	3	6	10
99	25241	3.4914	1	2	3	4	7
100	10191	2.4244	1	1	2	3	4
101	19810	5.1725	1	2	4	7	10
102	4399	3.1298	1	1	2	4	6
103	445	39.3528	10	15	29	53	80
104	22854	14.5510	6	8	12	18	26
105	19821	10.9286	5	7	9	13	19
106	96166	11.7202	6	8	10	14	19
107	61255	8.8314	5	6	7	10	14
108	6560	12.5834	4	7	10	15	23
110	59173	10.7795	3	6	9	13	20
111	5800	6.6512	3	5	6	8	10
112	191511	4.6987	1	2	4	6	9
113	45003	14.3320	4	6	10	17	28
114	8788	9.4467	2	4	7	12	18
115	10395	11.3715	4	6	9	14	20
116	81298	5.4177	1	2	4	7	11
117	4482	4.1142	1	1	2	5	8
118	6687	3.1952	1	1	2	4	7
119	1705	5.4985	1	1	3	7	13
120	40465	9.1860	1	2	6	12	21
121	158928	7.4120	2	4	6	9	13
122	87089	5.0036	1	3	5	6	9
123	46281	4.6510	1	1	2	6	11
124	138564	4.8885	1	2	4	6	9
125	59232	3.0694	1	1	2	4	6
126	4619	13.9985	4	7	11	17	29
127	670461	6.2113	2	3	5	8	12
128	19612	6.7259	3	4	6	8	11
129	4584	3.4271	1	1	1	4	9
130	91826	6.6818	2	4	6	8	12
131	25592	5.1808	1	3	5	7	8
132	127274	3.5716	1	2	3	4	6
133	5813	2.9696	1	1	2	4	5
134	28493	3.9142	1	2	3	5	7
135	7141	4.9779	1	2	4	6	9
136	1014	3.2209	1	2	3	4	6
138	195932	4.5466	1	2	3	6	8
139	67345	2.9337	1	1	2	4	5
140	175930	3.4831	1	2	3	4	6
141	76111	4.4923	1	2	3	5	8
142	35701	3.1999	1	2	2	4	6
143	132318	2.6077	1	1	2	3	5
144	66761	5.6816	1	2	4	7	11
145	6735	3.2413	1	1	2	4	6
146	8626	11.2570	6	7	9	13	18
147	1624	7.3651	4	6	7	9	11
148	140141	13.4097	6	8	11	16	24
149	15769	7.7194	4	6	7	9	11
150	22516	11.6884	4	7	10	14	21
151	4518	6.4748	2	4	6	8	11
152	4469	9.0257	4	6	8	10	15
153	1710	6.1655	3	4	6	8	9
154	35661	14.9524	5	8	12	18	28
155	4557	5.8824	2	3	5	8	10

TABLE 7B.—MEDICARE PROSPECTIVE PAYMENT SYSTEM SELECTED PERCENTILE LENGTHS OF STAY—Continued

[FY95 MEDPAR Update 12/95 Grouper V14.0]

DRG	Number discharges	Arithmetic mean LOS	10th percentile	25th percentile	50th percentile	75th percentile	90th percentile
156	4	15.7500	4	4	10	22	27
157	11419	5.7824	1	2	4	7	11
158	5082	2.9124	1	1	2	4	6
159	17132	5.3155	1	2	4	7	10
160	9971	2.9553	1	1	2	4	5
161	14786	4.3655	1	2	3	5	9
162	7990	2.1914	1	1	2	3	4
163	5	2.2000	1	1	1	3	5
164	4995	9.2993	4	6	8	11	16
165	1674	5.7575	3	4	5	7	9
166	3283	5.7286	2	3	4	7	10
167	2284	3.2439	1	2	3	4	6
168	1739	4.8562	1	2	3	6	10
169	1025	2.5473	1	1	2	3	5
170	12463	12.4436	2	5	9	15	25
171	1157	5.4105	1	2	4	7	11
172	30820	8.1481	2	3	6	10	16
173	2188	4.2870	1	2	3	5	9
174	231782	5.5456	2	3	4	7	10
175	23071	3.5073	1	2	3	4	6
176	16011	6.1346	2	3	5	7	11
177	11991	4.9873	2	3	4	6	9
178	4174	3.6195	1	2	3	5	7
179	11198	7.1657	2	4	6	9	14
180	79145	6.0471	2	3	5	7	11
181	22152	3.9606	1	2	3	5	7
182	226099	4.9591	2	2	4	6	9
183	72147	3.4552	1	2	3	4	6
184	67	3.7463	1	2	2	4	6
185	3804	5.1966	1	2	4	6	10
186	1	2.0000	2	2	2	2	2
187	832	4.2524	1	2	3	6	8
188	61112	6.1262	2	3	5	8	12
189	7787	3.6773	1	1	3	5	7
190	62	4.8548	1	3	4	6	10
191	10459	16.1606	5	8	12	20	32
192	880	7.9625	2	4	7	9	14
193	8477	13.8662	5	8	11	17	25
194	805	8.4348	3	5	7	10	15
195	9196	10.4533	4	6	9	12	18
196	796	6.7651	3	4	6	8	11
197	28016	9.1380	4	5	7	11	16
198	7906	4.9586	2	3	4	6	8
199	2208	11.1005	3	5	9	14	22
200	1525	11.8413	2	4	8	14	25
201	1466	16.5750	4	7	13	21	34
202	25094	7.6794	2	3	6	9	15
203	28743	7.6566	2	3	6	10	15
204	49035	6.6942	2	3	5	8	13
205	21512	7.2152	2	3	5	9	14
206	1692	4.7305	1	2	4	6	10
207	35330	5.7193	2	3	4	7	11
208	10251	3.4474	1	2	3	4	6
209	328015	6.6569	3	4	6	7	10
210	131592	8.5557	4	5	7	10	14
211	25325	6.2610	3	4	6	7	10
212	9	5.0000	2	3	4	5	8
213	6789	9.6170	3	4	7	12	19
214	51282	6.4551	2	3	5	8	12
215	41115	3.6816	1	2	3	5	7
216	6435	11.0449	2	5	8	14	22
217	19341	15.2991	3	6	10	18	31
218	21844	6.2064	2	3	5	7	11
219	17973	3.7492	1	2	3	5	6
220	2	5.5000	5	5	6	6	6
221	4962	8.1475	2	4	6	10	16
222	3560	4.0573	1	2	3	5	8
223	18306	2.8650	1	1	2	3	5
224	7946	2.2699	1	1	2	3	4
225	6199	5.0045	1	2	3	6	11

TABLE 7B.—MEDICARE PROSPECTIVE PAYMENT SYSTEM SELECTED PERCENTILE LENGTHS OF STAY—Continued

[FY95 MEDPAR Update 12/95 Grouper V14.0]

DRG	Number discharges	Arithmetic mean LOS	10th percentile	25th percentile	50th percentile	75th percentile	90th percentile
226	5349	6.7080	1	2	4	8	14
227	4604	2.9622	1	1	2	4	6
228	3014	3.5551	1	1	2	4	7
229	1345	2.4007	1	1	2	3	5
230	2455	5.1548	1	2	3	6	11
231	10331	5.0624	1	2	3	6	11
232	576	4.5017	1	1	2	5	10
233	4538	8.9595	2	4	7	11	18
234	2220	4.1730	1	2	3	5	8
235	5543	6.7231	1	3	4	7	13
236	37803	6.2862	2	3	5	7	12
237	1510	4.4139	1	2	3	5	8
238	7538	10.0649	3	5	7	12	19
239	59580	7.6024	2	4	6	9	14
240	12047	7.4987	2	3	5	9	15
241	3019	4.6277	1	2	4	6	9
242	2528	7.6606	2	4	6	9	15
243	79979	5.6107	2	3	4	7	10
244	11456	5.8092	2	3	4	7	11
245	4259	4.2158	1	2	3	5	8
246	1312	4.5899	1	2	4	6	9
247	10591	3.9716	1	2	3	5	8
248	6767	5.2815	1	2	4	6	10
249	10077	4.2995	1	2	3	5	9
250	3178	4.9091	1	2	3	6	9
251	2090	3.2933	1	1	3	4	6
252	1	1.0000	1	1	1	1	1
253	17469	5.8164	2	3	4	7	11
254	9208	3.8588	1	2	3	5	7
255	1	2.0000	2	2	2	2	2
256	4600	5.7178	1	2	4	7	11
257	23640	3.4239	1	2	3	4	6
258	18784	2.4905	1	2	2	3	4
259	4010	3.5077	1	1	2	3	7
260	4868	1.8683	1	1	1	2	3
261	2334	2.3500	1	1	2	3	4
262	712	3.9284	1	1	2	5	8
263	29088	13.8669	4	6	10	16	28
264	3559	8.3442	2	4	6	10	17
265	4274	7.6467	1	2	5	9	16
266	2712	3.6855	1	1	3	5	7
267	222	4.0811	1	1	3	5	9
268	891	4.0000	1	1	2	4	9
269	10174	9.1235	2	3	7	12	18
270	3456	3.3958	1	1	2	4	8
271	21515	8.4984	3	4	7	10	15
272	5863	7.4481	2	3	6	9	14
273	1426	5.5035	2	2	4	7	11
274	2526	7.7458	2	3	5	9	15
275	250	3.5040	1	1	2	4	8
276	889	5.0472	1	2	4	6	9
277	79054	6.7240	3	4	5	8	12
278	26008	5.1420	2	3	4	6	9
279	5	4.8000	2	2	3	4	12
280	13098	5.1142	1	2	4	6	9
281	5890	3.6448	1	2	3	4	7
283	5233	5.4888	2	2	4	7	10
284	1755	3.8632	1	2	3	5	7
285	4886	13.5014	3	6	10	16	26
286	1918	8.7195	3	4	6	9	16
287	6284	13.3908	3	6	9	16	26
288	957	7.0449	2	4	5	7	11
289	4992	3.9732	1	2	2	4	8
290	8514	2.8404	1	1	2	3	5
291	86	1.7558	1	1	1	2	3
292	5046	12.6958	2	5	9	16	25
293	294	6.4456	1	3	5	8	14
294	86024	5.6681	2	3	4	7	10
295	3712	4.2826	1	2	3	5	8
296	218940	6.3561	2	3	5	8	12

TABLE 7B.—MEDICARE PROSPECTIVE PAYMENT SYSTEM SELECTED PERCENTILE LENGTHS OF STAY—Continued

[FY95 MEDPAR Update 12/95 Grouper V14.0]

DRG	Number discharges	Arithmetic mean LOS	10th percentile	25th percentile	50th percentile	75th percentile	90th percentile
297	31455	4.2781	1	2	3	5	8
298	95	3.0211	1	1	2	4	5
299	868	5.3652	1	2	4	7	10
300	14115	7.3032	2	3	6	9	14
301	2146	4.3877	1	2	3	6	9
302	7567	12.3190	6	7	9	14	21
303	18462	10.1938	4	6	8	12	18
304	12867	10.2970	3	5	7	13	21
305	2526	4.9097	1	3	4	6	9
306	11305	6.2204	2	2	4	8	13
307	2596	2.9819	1	2	2	3	5
308	9137	7.0113	1	2	5	9	15
309	3371	3.0009	1	1	2	4	6
310	28549	4.6077	1	2	3	6	9
311	9697	2.1734	1	1	2	3	4
312	1995	4.7895	1	2	3	6	10
313	745	2.2644	1	1	2	3	5
314	1	5.0000	5	5	5	5	5
315	27722	9.2695	1	2	6	12	20
316	69941	7.4958	2	3	6	9	15
317	779	2.8434	1	1	2	3	6
318	5981	7.1195	2	3	5	9	14
319	506	3.2174	1	1	2	4	7
320	169078	6.4297	2	3	5	8	11
321	25512	4.7020	2	3	4	6	8
322	81	4.3580	2	2	4	6	8
323	17690	3.5573	1	2	3	4	7
324	8755	2.0870	1	1	2	3	4
325	7381	4.5898	1	2	3	5	9
326	2186	3.4492	1	1	2	4	6
327	8	3.1250	1	2	2	2	4
328	817	4.2742	1	2	3	5	9
329	109	2.7523	1	1	2	3	5
330	1	1.0000	1	1	1	1	1
331	38181	6.1753	2	3	5	8	12
332	4687	3.8835	1	2	3	5	8
333	357	5.8319	1	3	4	7	13
334	19011	6.0503	3	4	5	7	9
335	9821	4.5786	2	3	4	6	7
336	60748	4.1251	1	2	3	5	8
337	38538	2.6717	1	2	2	3	4
338	4813	5.2703	1	2	3	6	11
339	2302	4.9392	1	2	3	6	10
340	2	3.0000	1	1	5	5	5
341	6427	3.2367	1	1	2	4	6
342	224	4.0089	1	1	2	5	8
344	3820	3.4652	1	1	2	4	7
345	1355	3.9734	1	2	3	4	9
346	5344	6.7500	1	3	5	8	14
347	418	3.3349	1	1	2	4	7
348	3021	4.8875	1	2	4	6	9
349	684	2.9956	1	1	2	4	6
350	6884	4.7451	2	3	4	6	8
352	576	3.9392	1	2	3	5	8
353	2621	8.3564	3	5	6	10	15
354	9693	6.3330	3	4	5	7	11
355	5607	3.8639	2	3	4	4	6
356	28647	3.0247	1	2	3	4	5
357	6526	9.8462	4	5	8	12	18
358	26797	4.7425	2	3	4	5	8
359	27392	3.2715	2	3	3	4	5
360	16717	3.5393	1	2	3	4	6
361	618	3.4644	1	1	2	4	7
363	4355	3.4953	1	2	2	3	6
364	1778	3.6310	1	1	2	5	8
365	2396	8.1123	2	3	5	10	18
366	4471	7.6741	2	3	5	10	16
367	545	3.3266	1	1	2	4	7
368	2285	6.9190	2	3	5	9	13
369	2409	3.7410	1	1	3	5	7

TABLE 7B.—MEDICARE PROSPECTIVE PAYMENT SYSTEM SELECTED PERCENTILE LENGTHS OF STAY—Continued

[FY95 MEDPAR Update 12/95 Grouper V14.0]

DRG	Number discharges	Arithmetic mean LOS	10th percentile	25th percentile	50th percentile	75th percentile	90th percentile
370	1083	5.5568	3	3	4	5	9
371	950	3.5874	2	3	3	4	5
372	809	3.3498	1	2	2	3	6
373	3637	1.9249	1	1	2	2	3
374	116	2.3621	1	2	2	2	3
375	5	2.2000	1	1	2	3	4
376	151	3.4834	1	1	2	4	8
377	26	3.2308	1	1	1	3	8
378	163	2.9755	1	2	3	3	5
379	309	2.9256	1	1	2	3	5
380	71	2.3239	1	1	2	3	4
381	194	2.2835	1	1	1	2	5
382	47	1.6596	1	1	1	1	3
383	1455	4.0460	1	2	3	5	8
384	123	3.3496	1	1	1	3	7
385	3	17.0000	1	1	1	49	49
389	24	10.6667	3	4	8	10	18
390	10	5.0000	1	2	3	6	9
392	2467	11.6700	4	6	8	15	24
394	1642	7.8831	1	2	5	9	16
395	65671	5.3672	1	2	4	7	10
396	18	3.9444	1	1	3	7	8
397	15421	6.0683	2	3	4	7	12
398	16601	6.5794	2	3	5	8	12
399	1424	4.4347	1	2	4	6	8
400	7468	10.3293	2	4	7	13	23
401	6365	12.3829	2	5	9	16	25
402	1542	4.6984	1	1	3	6	10
403	34765	9.2628	2	4	7	12	19
404	3944	5.0822	1	2	4	7	10
406	3264	11.1468	3	5	8	14	23
407	723	4.9267	1	2	4	6	9
408	2949	8.2035	1	2	5	10	18
409	5649	6.6516	2	3	4	6	14
410	85871	3.3540	1	2	3	4	5
411	50	2.5600	1	1	2	3	7
412	35	3.0857	1	1	2	4	8
413	8422	8.2992	2	3	6	10	17
414	797	5.2070	1	2	4	7	11
415	38804	15.6974	4	7	12	19	31
416	192133	8.2122	2	4	7	10	15
417	45	4.6222	1	2	4	7	10
418	18663	6.7433	2	3	5	8	13
419	15677	5.6580	2	3	4	7	10
420	2871	4.3006	2	2	4	5	8
421	11386	4.6473	2	2	4	6	8
422	89	3.6854	1	2	3	4	7
423	9118	8.6534	2	4	6	10	18
424	1990	17.7397	3	6	12	20	34
425	15247	4.8955	1	2	3	6	10
426	4721	5.4938	1	2	4	7	11
427	1773	5.2775	1	2	4	7	11
428	904	8.4303	1	3	5	10	18
429	38861	8.9079	2	3	6	10	17
430	53430	9.7495	2	4	7	12	19
431	190	7.4632	1	3	5	9	14
432	430	6.3395	1	2	4	6	11
433	7843	3.4051	1	1	2	4	7
434	20810	5.8148	2	3	4	7	11
435	15477	4.8166	1	3	4	6	8
436	2915	14.5413	4	8	14	21	28
437	14205	10.8943	4	6	10	14	20
439	867	8.9262	2	3	6	11	18
440	4751	9.7838	2	3	6	12	21
441	611	4.4386	1	1	2	4	7
442	13818	8.7372	1	3	6	11	18
443	3299	3.5335	1	1	2	5	7
444	3319	5.3203	1	3	4	6	10
445	1321	3.7858	1	2	3	5	7
446	1	1.0000	1	1	1	1	1

TABLE 7B.—MEDICARE PROSPECTIVE PAYMENT SYSTEM SELECTED PERCENTILE LENGTHS OF STAY—Continued

[FY95 MEDPAR Update 12/95 Grouper V14.0]

DRG	Number discharges	Arithmetic mean LOS	10th percentile	25th percentile	50th percentile	75th percentile	90th percentile
447	3816	2.7953	1	1	2	3	5
448	84	1.0000	1	1	1	1	1
449	28775	4.4101	1	2	3	5	9
450	6807	2.3364	1	1	2	3	5
451	7	6.1429	2	3	4	5	7
452	19382	5.4066	1	2	4	6	11
453	3636	3.1876	1	1	2	4	6
454	5132	5.1046	1	2	3	6	10
455	1092	2.8333	1	1	2	3	5
456	194	8.3711	1	1	4	9	21
457	127	4.7953	1	1	2	5	10
458	1550	16.9387	4	7	13	22	35
459	533	10.3471	2	4	7	13	22
460	2303	6.6309	1	3	5	8	13
461	3040	4.8862	1	1	2	5	12
462	9360	13.7955	5	6	12	18	26
463	11987	5.1410	1	2	4	6	10
464	3079	3.7347	1	2	3	5	7
465	197	3.9086	1	1	2	4	7
466	1838	4.6366	1	1	2	4	10
467	1722	4.1057	1	1	2	4	8
468	56350	15.2546	3	7	12	19	30
471	9111	8.0289	4	5	6	9	13
472	150	30.6667	2	9	28	41	62
473	8211	14.3041	2	4	8	21	35
475	89514	12.1394	2	5	10	16	24
476	6875	13.7876	3	7	11	17	25
477	30427	9.1915	1	3	7	12	19
478	117755	8.2916	1	3	6	10	17
479	17758	4.5591	1	2	4	6	9
480	359	29.7159	10	13	22	37	61
481	177	32.0678	19	22	28	35	52
482	6754	14.9011	5	8	11	17	28
483	36200	45.7958	15	23	37	56	84
484	327	15.3364	2	6	11	21	32
485	3165	11.5893	4	6	9	13	21
486	2045	13.3482	1	6	11	18	28
487	3765	8.8770	1	3	7	11	17
488	1593	17.5267	5	8	13	22	35
489	17612	10.3989	2	4	7	13	22
490	4999	6.5719	1	2	4	8	14
491	9441	4.2777	2	3	3	5	7
492	2029	17.3834	3	5	10	28	37
493	52260	5.8809	1	2	5	8	11
494	27127	2.4245	1	1	2	3	5
495	107	23.7944	10	13	18	29	41
	10571233						

TABLE 8A.—STATEWIDE AVERAGE OPERATING COST-TO-CHARGE RATIOS FOR URBAN AND RURAL HOSPITALS (CASE WEIGHTED) APRIL 1996

State	Urban	Rural
ALABAMA	0.421	0.476
ALASKA	0.505	0.795
ARIZONA	0.426	0.567
ARKANSAS	0.539	0.501
CALIFORNIA	0.408	0.544
COLORADO	0.509	0.595
CONNECTICUT	0.553	0.551
DELAWARE	0.533	0.523
DISTRICT OF COLUMBIA	0.525	.....
FLORIDA	0.414	0.414
GEORGIA	0.527	0.532
HAWAII	0.484	0.567

TABLE 8A.—STATEWIDE AVERAGE OPERATING COST-TO-CHARGE RATIOS FOR URBAN AND RURAL HOSPITALS (CASE WEIGHTED) APRIL 1996—Continued

State	Urban	Rural
IDAHO	0.563	0.639
ILLINOIS	0.490	0.588
INDIANA	0.565	0.628
IOWA	0.546	0.685
KANSAS	0.457	0.651
KENTUCKY	0.507	0.562
LOUISIANA	0.478	0.538
MAINE	0.589	0.590
MARYLAND	0.765	0.816
MASSACHUSETTS	0.579	0.600
MICHIGAN	0.514	0.619

TABLE 8A.—STATEWIDE AVERAGE OPERATING COST-TO-CHARGE RATIOS FOR URBAN AND RURAL HOSPITALS (CASE WEIGHTED) APRIL 1996—Continued

State	Urban	Rural
MINNESOTA	0.565	0.655
MISSISSIPPI	0.524	0.527
MISSOURI	0.460	0.532
MONTANA	0.513	0.622
NEBRASKA	0.526	0.696
NEVADA	0.322	0.550
NEW HAMPSHIRE	0.597	0.615
NEW JERSEY	0.479	.....
NEW MEXICO	0.484	0.546
NEW YORK	0.595	0.684
NORTH CAROLINA	0.546	0.501

TABLE 8A.—STATEWIDE AVERAGE OPERATING COST-TO-CHARGE RATIOS FOR URBAN AND RURAL HOSPITALS (CASE WEIGHTED) APRIL 1996—Continued

State	Urban	Rural
NORTH DAKOTA	0.651	0.693
OHIO	0.567	0.606
OKLAHOMA	0.494	0.572
OREGON	0.573	0.649
PENNSYLVANIA	0.437	0.585
PUERTO RICO	0.495	0.642
RHODE ISLAND	0.587	.....
SOUTH CAROLINA	0.476	0.497
SOUTH DAKOTA	0.571	0.629
TENNESSEE	0.534	0.577
TEXAS	0.463	0.565
UTAH	0.578	0.665
VERMONT	0.638	0.596
VIRGINIA	0.499	0.538
WASHINGTON	0.636	0.686
WEST VIRGINIA	0.579	0.541
WISCONSIN	0.607	0.686
WYOMING	0.495	0.735

TABLE 8B.—STATEWIDE AVERAGE CAPITAL COST-TO-CHARGE RATIOS (CASE WEIGHTED) APRIL 1996

State	Ratio
ALABAMA	0.055
ALASKA	0.077
ARIZONA	0.051
ARKANSAS	0.055
CALIFORNIA	0.040
COLORADO	0.053
CONNECTICUT	0.037
DELAWARE	0.054
DISTRICT OF COLUMBIA	0.042
FLORIDA	0.051
GEORGIA	0.052
HAWAII	0.051
IDAHO	0.067
ILLINOIS	0.045
INDIANA	0.059
IOWA	0.062
KANSAS	0.055
KENTUCKY	0.056
LOUISIANA	0.069
MAINE	0.045
MARYLAND	0.013
MASSACHUSETTS	0.060
MICHIGAN	0.053
MINNESOTA	0.055
MISSISSIPPI	0.056
MISSOURI	0.053
MONTANA	0.064
NEBRASKA	0.058
NEVADA	0.034
NEW HAMPSHIRE	0.065
NEW JERSEY	0.045
NEW MEXICO	0.055
NEW YORK	0.059
NORTH CAROLINA	0.050
NORTH DAKOTA	0.074
OHIO	0.056
OKLAHOMA	0.058
OREGON	0.051
PENNSYLVANIA	0.045
PUERTO RICO	0.078
RHODE ISLAND	0.039

TABLE 8B.—STATEWIDE AVERAGE CAPITAL COST-TO-CHARGE RATIOS (CASE WEIGHTED) APRIL 1996—Continued

State	Ratio
SOUTH CAROLINA	0.053
SOUTH DAKOTA	0.064
TENNESSEE	0.057
TEXAS	0.055
UTAH	0.055
VERMONT	0.050
VIRGINIA	0.058
WASHINGTON	0.063
WEST VIRGINIA	0.060
WISCONSIN	0.048
WYOMING	0.067

Appendix A—Regulatory Impact Analysis

I. Introduction

We generally prepare a regulatory flexibility analysis that is consistent with the Regulatory Flexibility Act (RFA)(5 U.S.C. 601 through 612), unless the Secretary certifies that a proposed rule would not have a significant economic impact on a substantial number of small entities. For purposes of the RFA, we consider all hospitals to be small entities.

Also, section 1102(b) of the Social Security Act (the Act) requires the Secretary to prepare a regulatory impact analysis for any proposed rule that may have a significant impact on the operations of a substantial number of small rural hospitals. Such an analysis must conform to the provisions of section 603 of the RFA. With the exception of hospitals located in certain New England counties, for purposes of section 1102(b) of the Act, we define a small rural hospital as a hospital with fewer than 100 beds that is located outside of a Metropolitan Statistical Area (MSA) or New England County Metropolitan Area (NECMA). Section 601(g) of the Social Security Amendments of 1983 (Public Law 98-21) designated hospitals in certain New England counties as belonging to the adjacent NECMA. Thus, for purposes of the prospective payment system, we classify these hospitals as urban hospitals.

It is clear that the changes being proposed in this document would affect both a substantial number of small rural hospitals as well as other classes of hospitals, and the effects on some may be significant. Therefore, the discussion below, in combination with the rest of this proposed rule, constitutes a combined regulatory impact analysis and regulatory flexibility analysis.

II. Objectives

The primary objective of the prospective payment system is to create incentives for hospitals to operate efficiently and minimize unnecessary costs while at the same time ensuring that payments are sufficient to adequately compensate hospitals for their legitimate costs. In addition, we share national goals of deficit reduction and restraints on government spending in general.

We believe the proposed changes would further each of these goals while maintaining the financial viability of the hospital industry and ensuring access to high quality health care for Medicare beneficiaries. We expect that these proposed changes would ensure that the outcomes of this payment system are, in general, reasonable and equitable while avoiding or minimizing unintended adverse consequences.

III. Limitations of Our Analysis

As has been the case in previously published regulatory impact analyses, the following quantitative analysis presents the projected effects of our proposed policy changes, as well as statutory changes effective for FY 1997, on various hospital groups. We estimate the effects of individual policy changes by estimating payments per case while holding all other payment policies constant. We use the best data available, but we do not attempt to predict behavioral responses to our policy changes, and we do not make adjustments for future changes in such variables as admissions, lengths of stay, or case mix. As we have done in previous proposed rules, we are soliciting comments and information about the anticipated effects of these changes on hospitals, and our methodology for estimating them.

IV. Hospitals Included In and Excluded From the Prospective Payment System

The prospective payment systems for hospital inpatient operating and capital-related costs encompass nearly all general, short-term, acute care hospitals that participate in the Medicare program. There were 46 Indian Health Service hospitals in our data base, which we excluded from the analysis due to the special characteristics of the prospective payment method for these hospitals. Among other short-term, acute care hospitals, only the 50 such hospitals in Maryland remain excluded from the prospective payment system under the waiver at section 1814(b)(3) of the Act. Thus, as of April 1996, we have included 5,130 hospitals in our analysis. This represents about 82 percent of all

Medicare-participating hospitals. The majority of this impact analysis focuses on this set of hospitals.

The remaining 18 percent are specialty hospitals that are excluded from the prospective payment system and continue to be paid on the basis of their reasonable costs (subject to a rate-of-increase ceiling on their inpatient operating costs per discharge). These hospitals include psychiatric, rehabilitation, long-term care, children's, and cancer hospitals. The impacts of our proposed policy changes on these hospitals are discussed below.

V. Impact on Excluded Hospitals and Units

As of April 1996, there were 1,141 specialty hospitals excluded from the prospective payment system and instead paid on a reasonable cost basis subject to the rate-of-increase ceiling under § 413.40. In addition, there were 2,258 psychiatric and rehabilitation units in hospitals otherwise subject to the prospective payment system. These excluded units are also paid in accordance with § 413.40.

In accordance with section 1886(b)(3)(B)(ii)(V) of the Act, the update factor applicable to the rate-of-increase limit for excluded hospitals and units for FY 1997 would be 1.7 percent (excluded hospital market basket minus 1.0 percentage points), adjusted to account for the relationship between the hospital's allowable operating cost per case and its target amounts.

The impact on excluded hospitals and units of the proposed update in the rate-of-increase limit depends on the cumulative cost increases experienced by each excluded hospital and excluded unit since its applicable base period. For excluded hospitals and units that have maintained their cost increases at a level below the percentage increases in the rate-of-increase limits since their base period, the major effect will be on the level of incentive payments these hospitals and units receive. Conversely, for excluded hospitals and units with per-case cost increases above the cumulative update in their rate-of-increase limit, the major effect will be the amount of excess costs that the hospitals would have to absorb.

In this context, we note that, under § 413.40(d)(3), an excluded hospital or unit whose costs exceed the rate-of-increase limit is allowed to receive the lower of its rate-of-increase ceiling plus 50 percent of reasonable costs in excess of the ceiling, or 110 percent of its ceiling. In addition, under the various provisions set forth in § 413.40, excluded hospitals and units can obtain payment adjustments for significant, justifiable, increases in operating costs that exceed the limit. At the same time, however, by generally limiting payment increases, we continue to provide an incentive for excluded hospitals and units to restrain the growth in their spending for patient services.

VI. Quantitative Impact Analysis of the Proposed Policy Changes Under the Prospective Payment System for Operating Costs

A. Basis and Methodology of Estimates

In this proposed rule, we are announcing policy changes and payment rate updates for the prospective payment systems for operating and capital-related costs. We have prepared separate analyses of the proposed changes to each system, beginning with changes to the operating prospective payment system.

The data used in developing the quantitative analyses presented below are taken from the FY 1995 MedPAR file and the most current provider-specific file that is used for payment purposes. Although the analyses of the changes to the operating prospective payment system do not incorporate cost data, the most recently available hospital cost report data were used to create some of the variables by which hospitals are categorized. Our analysis has several qualifications. First, we do not make adjustments for behavioral changes that hospitals may adopt in response to these proposed policy changes. Second, due to the interdependent nature of the prospective payment system, it is very difficult to precisely quantify the impact associated with each proposed change. Third, we draw upon various sources for the data used to categorize hospitals in the tables. In some cases, particularly the number of beds, there is a fair degree of variation in the data from different sources. We have attempted to construct these variables with the best available source overall. For individual hospitals, however, some miscategorizations are possible.

Using cases in the FY 1995 MedPAR file, we simulated payments under the operating prospective payment system given various combinations of payment parameters. Any short-term, acute care hospitals not paid under the general prospective payment systems (Indian Health Service hospitals and hospitals in Maryland) are excluded from the simulations. Payments under the capital prospective payment system, or payments for costs other than inpatient operating costs, are not analyzed here. Estimated payment impacts of proposed FY 1997 changes to the capital prospective payment system are discussed below in section VII of this Appendix.

The proposed changes discussed separately below are the following:

- The effects of the annual reclassification of diagnoses and procedures and the recalibration of the diagnosis-related group (DRG) relative weights required by section 1886(d)(4)(C) of the Act.
- The effects of changes in hospitals' wage index values reflecting the wage index update (FY 1993 data).
- The effects of geographic reclassifications by the Medicare Geographic Classification Review Board (MGCRB) that will be effective in FY 1997.
- The effects of phasing out payments for extraordinarily lengthy cases (day outlier cases) with a corresponding increase in payments for extraordinarily costly cases (cost outliers), in accordance with section 1886(d)(5)(A)(v) of the Act.
- The total change in payments based on FY 1997 policies relative to payments based on FY 1996 policies.

To illustrate the impacts of the FY 1997 proposed changes, our analysis begins with an FY 1997 baseline simulation model using: the FY 1996 GROUPER (version 13.0); the FY 1996 wage indexes; no MGCRB reclassifications; and current outlier policy (50 percent phase out of day outlier payments). Outlier payments are assumed to be 5.1 percent of total DRG payments.

Each policy change is then added incrementally to this baseline model, finally arriving at an FY 1997 model incorporating all of the proposed changes. This allows us to isolate the effects of each proposed change.

Our final comparison illustrates the percent change in payments per case from FY 1996 to FY 1997. Four factors not displayed in the previous five columns have significant impacts here. First is the update to the standardized amounts. In accordance with section 1886(d)(3)(A)(iv) of the Act, we are proposing to update the large urban and the other areas average standardized amounts for FY 1997 using the most recently forecasted hospital market basket increase for FY 1997 of 2.7 percent, minus 0.5 percentage points. Thus, the update to the large urban and other areas standardized amounts is 2.2 percent. Similarly, section 1886(b)(3)(C)(ii) of the Act provides that the update factor applicable to the hospital-specific rates for sole community hospitals (SCHs) and essential access community hospitals (EACHs) (which are treated as SCHs for

payment purposes) is also the market basket increase minus 0.5 percent, or 2.2 percent.

A second significant factor impacting changes in hospitals' payments per case from FY 1996 to FY 1997 is a change in MGCRB reclassification status from one year to the next. That is, hospitals reclassified in FY 1996 that are no longer reclassified in FY 1997 may have a negative payment impact going from FY 1996 to FY 1997; conversely, hospitals not reclassified in FY 1996 that are reclassified in FY 1997 may have a positive impact. In some cases these impacts can be quite substantial, so if a relatively small number of hospitals in a particular category lose their reclassification status, the percentage increase in payments for the category may be below the national mean.

A third significant factor is that we currently estimate that actual outlier payments during FY 1996 will be 4.2 percent of actual total DRG payments. When the FY 1996 final rule was published, we projected FY 1996 outlier payments would be 5.1 percent of total DRG payments, and the standardized amounts were reduced correspondingly. The effects of the lower than expected outlier payments during FY 1996 (as discussed in the Addendum to this proposed rule) are reflected in the analyses below comparing our current estimates of FY 1996 payments per case to estimated FY 1997 payments per case.

Finally, the regional floor provision (section 1886(d)(1)(A)(iii)(II) of the Act) expires effective with discharges occurring on or after October 1, 1996. Under this provision (applicable during FY 1996), hospitals within any census division having a regional standardized amount greater than the national standardized amount (large urban or other, depending on which amount was applicable) received a blend of 85 percent of the national amount and 15 percent of the regional amount. Hospitals in census divisions where the regional floor was applicable during FY 1996 will be negatively impacted by its expiration when comparing FY 1996 to FY 1997.

Table I demonstrates the results of our analysis. The table categorizes hospitals by various geographic and special payment consideration groups to illustrate the varying impacts on different types of hospitals. The top row of the table shows the overall impact on the 5,130 hospitals included in the analysis. This is 77 fewer hospitals than were included in the impact analysis in the FY 1996 final rule (60 FR 45924). Data for 107 hospitals that were included in last year's analysis were not available for analysis this year; however, data were available this year for 30 hospitals for which data were not available last year.

The next four rows of Table I contain hospitals categorized according to their geographic location (all urban, which is further divided into large urban and other urban, or rural). There are 2,878 hospitals located in urban areas (MSAs or NECMAs) included in our analysis. Among these, there are 1,597 hospitals located in large urban areas (populations over 1 million), and 1,281 hospitals in other urban areas (populations of 1 million or fewer). In addition, there are 2,252 hospitals in rural areas. The next two groupings are by bed size categories, shown separately for urban and rural hospitals. The final groupings by geographic location are by census divisions, also shown separately for urban and rural hospitals.

The second part of Table I shows hospital groups based on hospitals' FY 1997 payment classifications, including any reclassifications under section 1886(d)(10) of the Act. For example, the rows labeled urban, large urban, other urban, and rural, show the numbers of hospitals being paid based on these categorizations (after consideration of geographic reclassifications), are 2,978, 1,793, 1,185, and 2,152, respectively.

The next three groupings examine the impacts of the proposed changes on hospitals grouped by whether or not they have residency programs (teaching hospitals that receive an indirect medical education (IME) adjustment), receive disproportionate share (DSH) payments, or some combination of these two adjustments. There are 4,057 nonteaching hospitals in our analysis, 841 teaching hospitals with fewer than 100 residents, and 232 teaching hospitals with 100 or more residents.

In the DSH categories, hospitals are grouped according to their DSH payment status, and whether they are considered urban or rural after MGCRB reclassifications. Hospitals in the rural DSH categories, therefore, represent hospitals that were not reclassified for purposes of the standardized amount. (They may, however, have been reclassified for purposes of the wage index.) The next category groups hospitals considered urban after geographic reclassification, in terms of whether they receive the IME adjustment, the DSH adjustment, both, or neither.

The next four rows examine the impacts of the proposed changes on rural hospitals by special payment groups (SCHs, rural referral centers (RRCs), and EACHs), as well as rural hospitals not receiving a special payment designation. Rural hospitals reclassified for FY 1997 for purposes of the standardized amount are not included here.

The RRCs (90), SCH/EACHs (641), and SCH/EACH and RRCs (39) shown here were not reclassified for purposes of the standardized amount. There are four EACHs included in our analysis and five EACH/RRCs.

There are two RRCs and three SCHs that will be reclassified for the standardized amount in FY 1997 that, therefore, are not included in these rows. There are significantly fewer reclassifications among these groups than there were in FY 1996, owing to the new criterion under § 412.230(a)(5)(ii) that a hospital may not be reclassified for purposes of the standardized amount if the area to which the hospital seeks reclassification does not have a higher standardized amount than that currently received by the hospital. (See the September 1, 1995 final rule (60 FR 45799).) Before this change (effective with reclassifications for FY 1997), some rural hospitals reclassified to other urban areas in order to qualify for urban DSH payments. For other rural hospitals that already qualified for DSH payments, the urban designation enabled them to qualify for a higher DSH adjustment than they would receive as a rural hospital.

The next two groupings are based on type of ownership and the hospital's Medicare utilization expressed as a percent of total patient days. These data are taken primarily from the FY 1994 Medicare cost report files, if available (otherwise FY 1993 data are used). Data needed to calculate Medicare utilization percentages were unavailable for 131 hospitals. For the most part, these are either new hospitals or hospitals filing manual cost reports that are not yet entered into the data base.

The next series of groupings concern the geographic reclassification status of hospitals. The first three groupings display hospitals that were reclassified by the MGCRB for either FY 1996 or FY 1997, or for both years, by urban/rural status. The next rows illustrate the overall number of FY 1997 reclassifications, as well as the numbers of reclassified hospitals grouped by urban and rural location. The final row in Table I contains hospitals located in rural counties but deemed to be urban under section 1886(d)(8)(B) of the Act.

TABLE I.—IMPACT ANALYSIS OF CHANGES FOR FY 1997 OPERATING PROSPECTIVE PAYMENT SYSTEM

[Percent changes in payments per case]

	Number of hosps.[1] (0)	DRG recalibration[2] (1)	New wage data[3] (2)	MGCRB reclassification[4] (3)	Day outlier policy changes[5] (4)	All FY 97 changes[6] (5)
(By Geographic Location)						
All hospitals	5,130	0.1	−0.1	0.0	0.0	3.1
Urban hospitals	2,878	0.1	0.0	−0.4	−0.1	3.2
Large urban	1,597	0.1	0.0	−0.5	−0.2	3.1
Other urban	1,281	0.1	−0.1	−0.2	0.1	3.3
Rural hospitals	2,252	0.0	−0.1	2.3	0.1	2.7
Bed size (urban):						
0–99 beds	716	0.0	−0.3	−0.5	0.2	3.0
100–199 beds	938	0.0	−0.2	−0.4	0.1	2.9
200–299 beds	577	0.1	−0.1	−0.4	0.0	3.1
300–499 beds	479	0.1	0.0	−0.4	−0.1	3.4
500 or more beds	168	0.1	0.1	−0.2	−0.4	3.4
Bed size (rural):						
0–49 beds	1,173	−0.1	0.0	0.0	0.1	2.8
50–99 beds	663	−0.1	−0.1	1.1	0.2	2.8
100–149 beds	241	0.0	−0.1	3.1	0.2	2.9
150–199 beds	99	0.0	−0.1	2.8	0.1	2.8
200 or more beds	76	0.1	−0.2	4.9	0.1	2.2
Urban by census division:						
New England	160	0.1	0.0	−0.1	−0.1	2.4
Middle Atlantic	434	0.1	0.6	−0.3	−1.1	3.5
South Atlantic	419	0.1	−0.2	−0.5	0.1	3.3
East North Central	483	0.1	0.3	−0.2	0.2	2.9
East South Central	163	0.1	−0.3	−0.5	0.2	3.4
West North Central	193	0.1	−0.4	−0.5	0.3	3.4
West South Central	375	0.1	−0.4	−0.5	0.4	3.6
Mountain	125	0.2	−0.4	−0.4	0.3	3.3
Pacific	478	0.1	−0.5	−0.4	0.2	2.9
Puerto Rico	48	−0.1	−0.7	−0.5	0.0	2.6
Rural by census division:						
New England	53	0.1	−1.0	2.0	0.3	2.1
Middle Atlantic	85	0.1	−0.5	0.8	−0.2	1.9
South Atlantic	297	0.0	−0.5	3.1	0.1	2.6
East North Central	304	0.1	0.2	2.1	0.2	2.9
East South Central	278	−0.1	0.2	2.5	0.2	2.2
West North Central	525	0.0	−0.1	2.1	0.2	2.8
West South Central	351	−0.1	0.2	3.1	0.2	3.2
Mountain	213	0.1	−0.2	0.8	0.1	3.0
Pacific	141	0.1	0.5	2.4	0.2	4.0
Puerto Rico	5	−0.2	−2.1	2.7	−0.1	3.8
(by payment categories)						
Urban hospitals	2,978	0.1	0.0	−0.3	−0.1	3.2
Large urban	1,793	0.1	0.0	−0.2	−0.2	3.2
Other urban	1,185	0.1	−0.1	−0.4	0.1	3.3
Rural hospitals	2,152	0.0	−0.1	1.9	0.1	2.6
Teaching status:						
Non-teaching	4,057	0.0	−0.2	0.3	0.2	3.1
Less than 100 res.	841	0.1	0.0	−0.4	0.0	3.2
100+ residents	232	0.1	0.2	−0.1	−0.5	3.2
Disproportionate Share Hospitals (DSH)						
Non-DSH	3,200	0.1	−0.2	0.2	0.1	3.2
Urban DSH:						
100 beds or more	1,410	0.0	0.0	−0.3	−0.2	3.2
Fewer than 100 beds	111	−0.3	−0.4	−0.5	0.3	2.5
Rural DSH:						
Sole community (SCH)	146	−0.1	−0.1	0.2	0.0	3.3
Referral centers (RRC)	25	0.0	−0.1	3.9	−0.1	3.7
Over 65	1,353	0.0	−0.1	0.1	0.1	3.1
Unknown	131	−0.1	0.9	−0.4	−1.4	3.1
Hospitals Reclassified by the Medicare Geographic Review Board						
Reclassification status during FY96 and FY97						
Reclassified during both FY96 and FY97	381	0.1	0.1	5.9	0.0	3.1

TABLE I.—IMPACT ANALYSIS OF CHANGES FOR FY 1997 OPERATING PROSPECTIVE PAYMENT SYSTEM—Continued

[Percent changes in payments per case]

	Number of hosps.[1] (0)	DRG recalibration[2] (1)	New wage data[3] (2)	MGCRB reclassification[4] (3)	Day outlier policy changes[5] (4)	All FY 97 changes[6] (5)
Urban	133	0.1	0.3	3.6	−0.2	3.4
Rural	248	0.0	−0.2	9.1	0.1	2.8
Reclassified during FY97 only	103	0.1	0.3	3.5	−0.4	8.6
Urban	34	0.2	0.4	2.4	−0.5	8.0
Rural	69	0.0	−0.2	7.1	0.1	10.5
Reclassified during FY96 only	251	0.1	−0.6	−1.3	0.1	−0.5
Urban	88	0.1	−0.9	−2.0	0.0	0.8
Rural	163	0.0	−0.2	−0.4	0.2	−2.1
FY 97 Reclassifications:						
All reclassified hosp.	484	0.1	0.1	5.3	−0.1	4.3
Stand. amount only	120	0.1	0.0	1.7	0.1	3.1
Wage index only	274	0.1	−0.3	8.1	−0.1	3.9
Both	90	0.1	0.8	4.4	−0.2	5.9
Nonreclassified	4,619	0.1	−0.1	−0.6	0.0	3.0
All urban reclass.	167	0.1	0.3	3.3	−0.3	4.6
Stand. amount only	63	0.1	0.1	0.9	0.0	3.3
Wage index only	30	0.2	−0.6	6.7	−0.6	4.5
Both	74	0.1	0.9	3.1	−0.2	5.6
Nonreclassified	2,711	0.1	−0.1	−0.6	−0.1	3.1
All rural reclass.	317	0.0	−0.2	8.8	0.1	3.8
Stand. amount only	57	0.0	−0.3	4.6	0.3	2.7
Wage index only	244	0.0	−0.1	8.8	0.1	3.6
Both	16	0.1	−0.4	18.8	0.2	9.1
Nonreclassified	1,908	0.0	−0.1	−0.4	0.1	2.2
Other reclassifed:						
Hospitals (section 1886(d)(8)(B))	27	0.1	−0.1	0.8	0.2	3.1

[1] Because data necessary to classify some hospitals by category were missing, the total number of hospitals in each category may not equal the national total. Discharge data are from FY 1995, and hospital cost report data are from reporting periods beginning in FY 1993 and FY 1994.

[2] This column displays the payment impacts of the recalibration of the DRG weights, based on FY 1995 MedPAR data and the DRG classification changes, in accordance with section 1886(d)(4)(C) of the Act.

[3] This column shows the payment effects of updating the data used to calculate the wage index with data from the FY 1993 cost reports. The percentage changes displayed here reflect the impacts of the wage and recalibration budget neutrality factor (0.998509).

[4] Shown here are the combined effects of geographic reclassification by the Medicare Geographic Classification Review Board (MGCRB). The effects shown here demonstrate the FY 1997 payment impacts of going from no reclassifications to the reclassifications scheduled to be in effect for FY 1997. Reclassification for prior years has no bearing on the payment impacts shown here.

[5] This column illustrates the payment impacts of changes in outlier payments, in accordance with section 1886(d)(5) of the Act.

[6] This column shows changes in payments from FY 1996 to FY 1997. It incorporates all of the changes displayed in columns 1 through 5. It also displays the impacts of the updates to the FY 1997 standardized amounts, changes in hospitals' reclassification status in FY 1997 compared to FY 1996, the expiration of the regional floor provision at section 1886(d)(1)(A)(iii)(II) of the Act, and the difference in outlier payments from FY 1996 to FY 1997. The sum of the first five columns plus these effects may be different from the percentage changes shown here due to changes in hospitals' geographic reclassification status from FY 1996 to FY 1997, rounding errors and interactive effects.

B. The Impact of the Proposed Changes to the DRG Classifications and Relative Weights (Column 1)

In column 1 of Table I, we present the combined effects of the DRG reclassifications and recalibration, as discussed in section II of the preamble to this proposed rule. Section 1886(d)(4)(C)(i) of the Act requires us each year to make appropriate classification changes and to recalibrate the DRG weights in order to reflect changes in treatment patterns, technology, and any other factors that may change the relative use of hospital resources.

The impact of reclassifications and recalibration on aggregate payments is required by section 1886(d)(4)(C)(iii) of the Act to be budget neutral. In addition, section 1886(d)(3)(E) specifies that any updates or adjustments to the wage index are budget neutral. As pointed out in the Addendum to this proposed rule, we compared aggregate payments using the FY 1996 DRG relative weights and the wage index effective October 1, 1995 to aggregate payments using the proposed FY 1997 DRG relative weights and wage index. Based on this comparison, we computed a wage and recalibration budget neutrality factor of 0.998509. In Table I, the combined overall impacts of the effects of both the DRG reclassifications and recalibration and the updated wage index (the All Hospitals row of columns 1 and 2) demonstrate that the net effect of these changes are budget neutral. That is, the 0.1 percent increase for all hospitals due to the DRG changes is negated by the 0.1 percent decrease for all hospitals with the new wage data.

Consistent with the minor changes we are proposing for the FY 1997 GROUPER, the redistributional impacts across hospital groups are very small (an increase of 0.1 for large and other urban hospitals). Among other hospital categories, the net effects are slightly negative changes for small (up to 99 beds) rural hospitals and slightly positive changes for larger (over 200 beds) rural and urban hospitals.

The largest single effect on any of the hospital categories examined is a 0.3 percent decrease in payments for smaller (100 or fewer beds) urban and rural hospitals that receive DSH payments. We note that the only other hospital category to experience a

decrease of more than 0.1 percent is rural hospitals in Puerto Rico.

We attribute these negative changes to the increasing gap between the relative weights for medical, diagnostic, and less complicated surgical DRGs and the weights for the more complicated surgical DRGs. Since the cases associated with the former DRGs tend to be treated more often in smaller hospitals with fewer resources available, lowering the relative weights associated with those cases would disproportionately affect these hospitals. In general, small hospitals that serve a disproportionate share of low-income patients and hospitals in rural Puerto Rico fit this definition. We note, however, that these negative impacts are relatively minor and do not result solely from the limited DRG revisions we are proposing for FY 1997.

C. The Impact of Updating the Wage Data (Column 2)

Section 1886(d)(3)(E) of the Act requires that, beginning October 1, 1993, we annually update the wage data used to calculate the wage index. In accordance with this requirement, the proposed wage index for FY 1997 is based on data submitted for hospital cost reporting periods beginning on or after October 1, 1992 and before October 1, 1993. As with the previous column, the impact of the new data on hospital payments is isolated by holding the other payment parameters constant in the two simulations. That is, column 2 shows the percentage changes in payments when going from a model using the FY 1996 wage index before geographic reclassifications based on FY 1992 wage data to a model using the FY 1997 prereclassification wage index based on FY 1993 wage data.

As noted above, to comply with the requirements that the DRG and wage index changes be implemented in a budget neutral manner, we compute a budget neutrality adjustment factor to apply to the standardized amounts. The 0.1 percent decrease for all hospitals in this column reflects the wage and recalibration budget neutrality factor of 0.998509. This decrease, combined with the 0.1 percent increase for all hospitals in column 1, demonstrates that the net effect on aggregate payments of the proposed DRG and wage index changes are budget neutral.

The results indicate that the new wage data do not have a significant overall impact on hospital payments. (It should be noted that the percentage changes attributed here to the new wage data are generally reduced by 0.2 percentage points due to the budget neutrality factor.) Thus, hospitals with significant changes in their wage indexes are not concentrated within any particular hospital group. Some of the largest changes are found among both urban and rural hospitals grouped by census division. In almost all cases, payments change by less than 1 percent. Our review of the wage data (as described below) indicates that these changes were attributable to improved reporting, as well as relative changes in labor costs.

In the 50 States and the District of Columbia, among the urban hospitals, the largest increase (0.6 percent) is in the Middle Atlantic census division. Significantly, New York City's wage index rises by over 1.6 percent (this also contributes to the 0.2 percent increase among major teaching hospitals and the 0.9 percent increase in the Unknown category under the Medicare Utilization rows). Last year, the Middle Atlantic experienced one of the largest decreases (0.6 percent), which contributed to the 0.4 percent decline among major teaching hospitals—New York City's wage index fell by nearly 2.0 percent in FY 1996 (60 FR 45929). The largest decrease among urban hospitals occurs in the Pacific census division, with a decline of 0.5 percent.

Among the rural hospitals, the largest increase (0.5 percent) is in the Pacific census division; the largest decrease (1.0 percent) is in the New England census division. This decrease is primarily due to a 2.5 percent decrease in the wage index for rural Connecticut hospitals and a 2.4 percent decrease in the wage index for rural New Hampshire hospitals. The Pacific rural hospitals also experienced one of the greatest increases (0.6 percent) among rural hospitals last year.

In Puerto Rico, payments decline by 2.1 percent for the five rural hospitals and by 0.7 percent for the urban hospitals. The average hourly wages reported in FY 1993 by two rural Puerto Rico hospitals fell from those reported in FY 1992 by 22.4 percent and 18.1 percent, leading to the 2.1 percent overall decline. Of the six urban areas in Puerto Rico, two experience increases in wage index values while four experience decreases. Among these four, three experience a decline of more than 5 percent. These MSAs have relatively few hospitals (two, five, and seven hospitals). The decreases appear to be the result of one or two hospitals in each area with a decrease of more than 5 percent in average hourly wages.

The proposed FY 1997 wage index represents the fourth annual update to the wage data, and will continue to include salaries, fringe benefits, home office salaries, and certain contract labor costs. In the past, updates to the wage data have resulted in significant payment shifts among hospitals. Since the wage index is now updated annually, we expect these payment fluctuations will decrease.

This expectation is borne out by comparing the proposed FY 1997 wage index (after reclassifications under sections 1886(d)(8)(B) and 1886(d)(10) of the Act) to the FY 1996 wage index. The following chart compares the shifts in wage index values (after reclassifications) for labor markets for FY 1997 with those from FY 1996. The majority of labor market areas (339) experience less than a 5 percent change. Only 25 labor market areas experience a change between 5 and 10 percent; 13 of those experience increases. Still fewer labor markets experience a change of more than 10 percent; two experience increases and two experience decreases. For FY 1996, by comparison, 10 labor market areas experienced an increase in their wage index value of more than 10 percent. We reviewed the data for any area that experienced a wage index change of 10 percent or more to determine the reason for the fluctuation.

Percentage change in area wage index values	Number of labor market areas	
	FY 1997	FY 1996
Increase more than 10 percent	2	10
Increase between 5 and 10 percent, (inclusive)	13	21
Increase/decrease below 5 percent	339	331
Decrease between 5 and 10 percent, (inclusive)	12	6
Decrease more than 10 percent	2	0

Under the proposed FY 1997 wage index, 96.2 percent of urban hospitals and 92.7 percent of rural hospitals would experience a change in their wage index of less than 5 percent. Approximately 5.9 percent (3.1 percent of urban hospitals and 2.8 percent of rural hospitals) would experience a change of between 5 and 10 percent, and 5.3 percent (0.8 percent of urban hospitals and 4.5 percent of rural hospitals) would experience a change of more than 10 percent. The following chart shows the projected impact for urban and rural hospitals.

Percentage change in area wage index values	Percent of hospitals (by Urban/Rural)	
	Urban	Rural
Increase more than 10 percent	0.4	2.5
Increase between 5 and 10 percent (inclusive)	1.5	0.9
Increase or decrease less than 5 percent	96.2	2.7
Decrease between 5 and 10 percent (inclusive)	1.6	1.9
Decrease more than 10 percent	0.4	2.0

ANote: The sum of the columns may not total to 100 due to rounding.

D. The Impact of MGCRB Reclassifications (Column 3)

Our impact analysis to this point has assumed hospitals are paid on the basis of their actual geographic location (with the exception of ongoing policies that provide that certain hospitals receive payments on bases other than where they are geographically located, such as RRCs and hospitals in rural counties that are deemed urban under section 1886(d)(8)(B) of the Act). The changes in column 3 reflect the per case payment impact of moving from this baseline to a simulation incorporating the MGCRB decisions for FY 1997. As noted below, these decisions affect hospitals' standardized amount and wage index area assignments. In addition, rural hospitals reclassified for purposes of the standardized amount also qualify to be treated as urban for purposes of the DSH adjustment.

By March 30 of each year, the MGCRB makes reclassification determinations that will be effective for the next fiscal year, which begins on October 1. The MGCRB may reclassify a hospital for the purpose of using the other area's standardized amount, wage index value, or both. (RRCs and SCHs are exempt from the proximity requirement.) Effective FY 1997, rural hospitals can no longer be reclassified to an other urban area for purposes of the standardized amount under section 1886(d)(10) of the Act.

The proposed FY 1997 wage index values incorporate all of the MGCRB's reclassification decisions for FY 1997. The wage index values also reflect any decisions made by the HCFA Administrator through the appeals and review process for MGCRB decisions as of March 29, 1996. Additional changes that result from the Administrator's review of MGCRB decisions or a request by a hospital to withdraw its application will be reflected in the final rule for FY 1997.

The overall effect of geographic reclassification is required to be budget neutral by section 1886(d)(8)(D) of the Act. Therefore, we applied an adjustment of 0.994059 to ensure that the effects of reclassification are budget neutral. (See section II.A.4 of the Addendum to this proposed rule).

As a group, rural hospitals benefit from geographic reclassification. Their payments rise 2.3 percent, while payments to urban hospitals decline 0.4 percent. Large urban hospitals lose 0.5 percent because, as a group, they have the smallest percentage of hospitals that are reclassified (fewer than 3 percent of large urban hospitals are reclassified). There are enough hospitals in other urban areas that are reclassified to limit the decrease in payments to urban hospitals stemming from the budget neutrality offset to 0.2 percent. Among urban hospital groups generally (that is, bed size, census division, and special payment status), payments fall between 0.2 and 0.5 percent.

A positive impact is evident among all rural hospital groups except rural hospitals with up to 49 beds, which experience a 0.0 percent impact. The smallest effect among all rural census divisions is 0.8 percent for the Middle Atlantic and Mountain divisions. These divisions have relatively fewer MGCRB reclassifications. Among urban census divisions, New England displays the smallest negative impact, 0.1 percent.

Among rural hospitals designated as RRCs, 50 hospitals are reclassified for purposes of the wage index only and experience a 9.5 percent increase in payments overall. This positive impact on RRCs is also reflected in the category of rural hospitals with 200 or more beds, which have a 4.9 percent increase in payments.

Rural hospitals reclassified for FY 1996 and FY 1997 experience a 9.1 percent increase in payments, the greatest of any group in the category. This may be due to the fact that these hospitals have the most to gain from reclassification and have been reclassified for a period of years. Rural hospitals reclassified for FY 1997 only experience a 7.1 percent increase in payments while rural hospitals reclassified for FY 1996 only experience a 0.4 decrease in payments. This is due to the budget neutrality adjustment, since the changes in this column reflect FY 1997 payments relative to no reclassifications, rather than to FY 1996 reclassifications. Urban hospitals reclassified for FY 1996 but not FY 1997 experience a 2.0 percent decline in payments overall. This appears to be due to the combined impacts of the budget neutrality adjustment and a number of hospitals in this category that experience a 6 percent drop in their wage index after reclassification. Urban hospitals reclassified for FY 1997 but not for FY 1996 experience a 2.4 percent increase in payments.

The FY 1997 Reclassification rows of Table I show the changes in payments per case for all FY 1997 reclassified and nonreclassified hospitals in urban and rural locations for each of the three reclassification categories (standardized amount only, wage index only, or both). The table illustrates that the largest impact for reclassified rural hospitals is for those hospitals reclassified for both the standardized amount and the wage index. These hospitals receive an 18.8 percent increase in payments. The number of hospitals in this category has declined from 42 in FY 1996 to 16 in FY 1997. In addition, rural hospitals reclassified for the wage index receive an 8.8 percent payment increase. The overall impact on reclassified hospitals is to increase their payments per case by an average of 5.3 percent for FY 1997.

Among the 27 rural hospitals deemed to be urban under section 1886(d)(8)(B) of the Act, payments increase 0.8 percent due to MGCRB reclassification. This is because, although these hospitals are treated as being attached to an urban area in our baseline (their redesignation is ongoing, rather than annual like the MGCRB reclassifications), they are eligible for MGCRB reclassification. For FY 1997, one hospital in this category reclassified to a large urban area, resulting in a net increase due to reclassifications of 0.8 percent.

The reclassification of hospitals primarily affects payment to nonreclassified hospitals through changes in the wage index and the geographic reclassification budget neutrality adjustment required by section 1886(d)(8)(D) of the Act. Among hospitals that are not reclassified, the overall impact of hospital reclassifications is an average decrease in payments per case of about 0.6 percent, which corresponds closely with the geographic reclassification budget neutrality factor. Rural nonreclassified hospitals decrease slightly less, experiencing a 0.4 percent decrease. This occurs because the wage index values in some rural areas increase after reclassified hospitals are excluded from the calculation of those index values.

The number of reclassifications for purposes of the standardized amount, or for both the standardized amount and the wage index, has declined from 358 in FY 1996 to 210 in FY 1997. This is not surprising because of the elimination of standardized amount

reclassifications from rural to other urban areas for individual hospitals. Individual rural hospitals can continue to reclassify to large urban areas for purposes of the standardized amount. The number of wage index only reclassifications increased slightly from 260 in FY 1996 to 274 in FY 1997.

The foregoing analysis was based on MGCRB and HCFA Administrator decisions made by March 29 of this year. As previously noted, there may be changes to some MGCRB decisions through the appeals, review, and applicant withdrawal process. The outcome of these cases will be reflected in the analysis presented in the final rule.

E. Outlier Changes (Column 4)

Medicare provides extra payment in addition to the basic DRG payment amount for extremely costly or extraordinarily lengthy cases (cost outliers and day outliers, respectively). Section 1886(d)(5)(A)(v) of the Act requires the Secretary to phase out payment for day outliers from FY 1994 day outlier levels in 25 percent increments beginning in FY 1995. Day outliers in FY 1997 should account for approximately 8 percent of total outlier payments (25 percent of FY 1994 levels). This reduction in day outlier payments will be offset by an increase in cost outlier payments.

As discussed in the Addendum, for FY 1997, we are proposing a day outlier threshold equal to the geometric mean length of stay for each DRG plus the lesser of 24 days or 3.0 standard deviations. The proposed marginal cost factor for day outliers is 35 percent. For FY 1997, we are proposing that a case would receive cost outlier payments if its costs exceed the DRG amount plus $11,050. We are also proposing to maintain the marginal cost factor for cost outliers at 80 percent.

The payment impacts of these changes are minimal. Hospital categories negatively affected by phasing out day outliers are consistent with the categories negatively affected in previous years: urban New England (0.1 percent decline); urban and rural Middle Atlantic census divisions (1.1 percent and 0.2 percent declines, respectively); urban hospitals with 500 or more beds (0.4 percent decline); teaching hospitals with 100 or more residents (0.5 percent decline); and hospitals for which data were unavailable to calculate Medicare utilization rates (1.4 percent decline). As noted in the wage index discussion previously, this last category contains a number of New York City hospitals. Because the changes to outlier policy result in a shift in payments from cases paid as day outliers to cases paid as cost outliers, this indicates that these categories have higher percentages of day outliers. The largest positive impact is among urban hospitals in the West South Central census division (0.4 percent increase).

F. All Changes (Column 5)

Column 5 compares our estimate of payments per case incorporating all of our proposed changes for FY 1997 to our estimate of payments per case in FY 1996. It also includes the effects of the 2.2 percent update to the standardized amounts and the hospital-specific rates for SCHs and EACHs, and the 0.9 percentage point difference between the percentage of projected outlier payments in FY 1997 (5.1 percent) and the current estimate of the percentage of actual outlier payments in FY 1996 (4.2 percent), as described in the introduction to this Appendix and the Addendum.

We also note that column 5 includes the impacts of FY 1997 MGCRB reclassifications compared to the payment impacts of FY 1996 reclassifications. Therefore, when comparing FY 1997 payments to FY 1996, the percent changes due to FY 1997 reclassifications shown in column 3 need to be offset by the effects of reclassification on hospitals' FY 1996 payments (column 4 of Table 1, September 1, 1995 final rule; 60 FR 45926). That is, column 3 of Table 1 shows the impacts of going from no MGCRB reclassifications to the FY 1997 reclassifications. When comparing FY 1996 and FY 1997 payments, hospitals similarly reclassified during FY 1996 would not experience the full extent of the change shown in column 3. For example, the impact of MGCRB reclassifications on rural hospitals' FY 1996 payments was approximately a 2.3 percent increase, equal to the 2.3 percent increase for FY 1997. Therefore, the net increase in FY 1997 payments due to reclassification for rural hospitals is 0 percent.

In addition, eliminating the regional floor provision effective for discharges occurring on or after October 1, 1996, results in approximately a 0.2 percent lower average payment in FY 1997 than would occur otherwise. Of course, this effect is attributable to particular census divisions, as discussed below.

Finally, the FY 1996 standardized amounts were adjusted by a budget neutrality factor of 0.997575, in accordance with section 1886(d)(5)(I) of the Act, so that the change to the transfer payment methodology we implemented last year (doubling the per diem payment for the first day of a transfer) would not affect aggregate payments. As we indicated in last year's final rule (60 FR 45854), this adjustment was applied on a one-time basis to the FY 1996 standardized amounts. After FY 1996, there will be no need for a further budget neutrality adjustment unless or until we make further changes to the transfer payment methodology. As a result, the FY 1997 standardized amounts are relatively higher (0.2 percent).

A single geographic reclassification budget neutrality factor of 0.994059 was applied to the proposed FY 1997 standardized amounts, compared to the FY 1996 factor of 0.994011. The budget neutrality adjustment factor for the updated wage index and the DRG recalibration is 0.998509, compared to the FY 1996 factor of 0.999306. Although the net effect of these changes is small, they are reflected in the payment differences shown in this column.

There may also be interactive effects among the various factors comprising the payment system that we are not able to isolate. For these reasons, the values in column 5 may not equal the sum of the previous columns plus the other impacts that we are able to identify.

The overall payment increase from FY 1997 to FY 1996 for all hospitals is a 3.1 percent increase. This reflects the 0.0 percent net change in total payments due to the proposed changes for FY 1997 shown in columns 1 through 4, the 2.2 percent update for FY 1997, and the 0.9 percent higher outlier payments in FY 1997 compared to FY 1996, as discussed above.

Hospitals in urban areas experience a 3.2 percent rise in payments per case over FY 1996. Similar to all hospitals nationally, this is primarily due to the factors discussed above: the 2.2 percent update; a 0.9 percent higher level of outlier payments estimated for FY 1997; and the offsetting effects of eliminating the regional floor and the FY 1996 transfer budget neutrality factor. Urban hospitals benefit 0.1 percent from DRG recalibration, while losing 0.1 percent due to the phase out of the day outlier policy. Their 0.4 negative impact in FY 1997 due to reclassification is offset by a similar impact from FY 1996 reclassifications.

Hospitals in large and other urban areas experience 3.1 percent and 3.3 percent increases, respectively. The lower increase for hospitals in large urban areas appears to be attributable primarily to the 0.2 percent negative impact of the continuing phase out of day outliers.

Hospitals in rural areas experience a 2.7 percent increase. Their FY 1997 payments are estimated to be 0.6 percent higher than for FY 1996 due to higher outlier payments. Like urban hospitals, the impact of geographic reclassification in FY 1997 is offset by an identical 2.3 percent increase in FY 1996.

Among urban bed size groups, column 5 shows changes in payments are higher for the largest urban hospitals compared to smaller urban hospitals. The relatively smaller increases for the smaller urban hospitals appear to be due to the negative impacts of the new wage data, as shown in column 2. Among rural bed size groups, the impacts range from 2.8 percent to 2.9 percent, with the exception of rural hospitals with 200 or more beds. Payments per case for this group of hospitals is estimated to increase 2.2 percent during FY 1997. This below average rate of increase appears to be attributable primarily to a smaller, though still significant, impact of MGCRB reclassifications during FY 1997 compared to FY 1996. In column 3 the FY 1997 impact of reclassification is shown to be 4.9 percent. For FY 1996, however, this impact was 5.4 percent. Thus, the rate of increase is 0.5 percent less for FY 1997 due to a smaller reclassification impact.

As discussed previously, effective for discharges on or after October 1, 1996, the regional floor, which benefitted certain census divisions, expires. The regional floor provided that, in those census divisions where the regional standardized amount exceeded the national standardized amount, hospitals would be paid a blend of 85 percent of the national amount and 15 percent of the regional amount. The census divisions affected by the regional floor during FY 1996 are New England and East North Central. In New England, the impacts of eliminating the regional floor are a 0.7 percent decrease for urban hospitals and a 0.6 percent decrease among rural hospitals. In the East North Central region, the impacts are a 1.0 percent reduction for urban hospitals, and a 0.7 percent reduction for rural hospitals. The negative impacts of losing the regional floor for urban hospitals in the East North Central region are largely offset by higher estimated outlier payments in FY 1997 compared to FY 1996, the 0.3 percent higher payments due to the FY 1993 wage data (column 2), and the 0.2 percent increase due to the phase-out of day outliers (column 4). On the other hand, urban New England hospitals' higher outlier payments in FY 1997 are offset entirely by the negative impacts of the expiration of the regional floor. Rural New England hospitals also see a 1.0 percent decrease in payments stemming from the FY 1993 wage data.

Other census divisions below the average payment increase are urban Pacific, urban Puerto Rico, rural Middle Atlantic, rural South Atlantic, rural East South Central, and rural Mountain. With the exception of the rural Middle Atlantic and rural East South Central, the below average overall payment impacts of these census divisions are related to negative impacts of introducing the FY 1993 wage data. In the rural Middle Atlantic, the negative impact of the new wage data is combined with a smaller impact stemming from MGCRB reclassifications in FY 1997 (0.8 percent compared to 1.5 percent in FY 1996). A smaller FY 1997 reclassification impact (2.5 percent compared with 3.7 percent in FY 1996) is also the reason for the small (2.2 percent) rate of increase in the rural East South Central census division.

Conversely, the urban Middle Atlantic, urban West South Central, rural Pacific, and rural Puerto Rico census divisions all have overall rates of increase at least 0.4 percent above the national average. The urban West South Central gains from the continued phase-out of day outliers, as well as higher estimated FY 1997 outlier payments compared to FY 1996. As noted previously, the urban Middle Atlantic benefits significantly from the updated wage index data. These hospitals also have higher estimated FY 1997 outlier payments, which offset their 1.1 percent decrease due to the phase-out of day outliers. Rural Pacific hospitals benefit from geographic reclassification in FY 1997, with 12 hospitals being reclassified that were not reclassified in FY 1996.

The only hospital groups with negative payment impacts from FY 1996 to FY 1997 are hospitals that were reclassified for FY 1996 and are not reclassified for FY 1997. Overall, these hospitals lose 0.5 percent. The urban hospitals in this category actually experience slight payment increases over FY 1996 (0.8 percent), while the rural hospitals lose 2.1 percent. On the other hand, hospitals reclassified for FY 1997 that were not reclassified for FY 1996 would experience the greatest payment increases: 10.5 percent for 69 rural hospitals in this category and 8.0 percent for 34 urban hospitals.

Reclassification appears to be a significant factor influencing the payment increases for a number of rural hospital groups with above average overall payment increases in column 5. For example, among hospital groups identified in the discussion of the impacts of MGCRB reclassifications for FY 1997 (column 3), almost all have overall increases of 3.6 percent or greater. This outcome highlights the redistributive effects of reclassification decisions upon hospital payments. This impact is illustrated even more clearly when one examines the rows categorizing hospitals by their reclassification status for FY 1997. All nonreclassified hospitals have an average payment increase of 3.0 percent. The average payment increase for all reclassified hospitals is 4.3 percent.

Among SCH/EACHs, the payment increase is 2.7 percent. The primary reason for this below average increase is that there is minimal impact upon these hospitals from the higher estimated FY 1997 outlier payments. Because these hospital groups receive their hospital-specific rate if it exceeds the applicable Federal amount (including outliers), there is less of an impact due to changes in outlier payment levels, which are not applied to the hospital-specific rate. In addition, nonspecial status rural hospitals experience only a 2.1 percent increase. This is largely attributable to a much smaller reclassification impact for FY 1997 among these hospitals.

TABLE II.—IMPACT ANALYSIS OF CHANGES FOR FY 1997 OPERATING PROSPECTIVE PAYMENT SYSTEM

[Payments per case]

	Number of hospitals (1)	Average FY 1996 payment percase (2) [1]	Average FY 1997 payment percase (3) [1]	All changes (4)
(By Geographic Location)				
All hospitals	5,130	6,470	6,673	3.1
Urban hospitals	2,878	7,004	7,229	3.2
Large urban areas	1,597	7,524	7,761	3.1
Other urban areas	1,281	6,317	6,524	3.3
Rural areas	2,252	4,302	4,419	2.7
Bed size (urban):				
0–99 beds	716	4,721	4,862	3.0
100–199 beds	938	5,939	6,112	2.9
200–299 beds	577	6,521	6,722	3.1
300–499 beds	479	7,410	7,660	3.4
500 or more beds	168	9,150	9,457	3.4
Bed Size (rural):				
0–49 beds	1,173	3,540	3,639	2.8
50–99 beds	663	3,996	4,108	2.8
100–149 beds	241	4,462	4,593	2.9
150–199 beds	99	4,582	4,713	2.8
200 or more beds	76	5,417	5,537	2.2
Urban by Census div.:				
New England	160	7,508	7,686	2.4
Middle Atlantic	434	7,686	7,953	3.5
South Atlantic	419	6,664	6,887	3.3
East North Central	483	6,742	6,940	2.9
East South Central	163	6,185	6,395	3.4
West North Central	193	6,652	6,880	3.4
West South Central	375	6,524	6,756	3.6
Mountain	125	6,774	6,996	3.3
Pacific	478	8,077	8,313	2.9
Puerto Rico	48	2,584	2,652	2.6
Rural by Census div.:				
New England	53	5,236	5,344	2.1
Middle Atlantic	85	4,695	4,785	1.9
South Atlantic	297	4,476	4,591	2.6
East North Central	304	4,328	4,454	2.9
East South Central	278	3,960	4,048	2.2
West North Central	525	4,008	4,121	2.8
West South Central	351	3,876	4,001	3.2
Mountain	213	4,575	4,712	3.0
Pacific	141	5,306	5,519	4.0
Puerto Rico	5	2,042	2,118	3.8
(By Payment Categories)				
Urban hospitals	2,978	6,960	7,184	3.2
Large urban areas	1,793	7,352	7,586	3.2
Other urban areas	1,185	6,322	6,528	3.3
Rural areas	2,152	4,269	4,379	2.6
Teaching status:				
Non-teaching	4,057	5,293	5,458	3.1
Fewer than 100 residents	841	6,900	7,118	3.2
100 or more residents	232	10,565	10,901	3.2
Disproportionate Share Hospitals (DSH):				
Non-DSH	3,200	5,602	5,779	3.2
Urban DSH:				
100 beds or more	1,410	7,595	7,835	3.2
Fewer than 100 beds	111	4,811	4,929	2.5
Rural DSH:				
Sole community (SCH)	146	4,478	4,625	3.3
Referral centers (RRC)	25	5,216	5,409	3.7
Other rural DSH hosp.:				
100 beds or more	89	4,235	4,280	1.1
Fewer than 100 beds	149	3,412	3,497	2.5
Urban Teaching and DSH:				
Both teaching and DSH	682	8,576	8,843	3.1
Teaching and no DSH	337	7,094	7,324	3.2

TABLE II.—IMPACT ANALYSIS OF CHANGES FOR FY 1997 OPERATING PROSPECTIVE PAYMENT SYSTEM—Continued

[Payments per case]

	Number of hospitals (1)	Average FY 1996 payment percase (2) [1]	Average FY 1997 payment percase (3) [1]	All changes (4)
No Teaching and DSH	839	6,093	6,292	3.3
No teaching and no DSH	1,120	5,479	5,663	3.4
Rural hospital types:				
Nonspecial Status Hospitals	1,382	3,901	3,984	2.1
RRC	90	5,068	5,249	3.6
SCH/Each	641	4,415	4,536	2.7
SCH/Each and RRC	39	5,200	5,345	2.8
Type of ownership:				
Voluntary	3,084	6,634	6,846	3.2
Proprietary	691	5,917	6,093	3.0
Government	1,355	6,030	6,207	2.9
Medicare utilization as a percent of inpatient days				
0–25	256	8,577	8,803	2.6
25–50	1,285	7,877	8,124	3.1
50–65	2,105	5,944	6,133	3.2
Over 65	1,353	5,062	5,220	3.1
Unknown	131	7,372	7,597	3.1
Hospitals Reclassified by the Medicare Geographic Review Board				
Reclassification status during FY96 and FY97:				
Reclassified during both FY96 and FY97	381	5,864	6,046	3.1
Urban	133	6,750	6,976	3.4
Rural	248	5,003	5,143	2.8
Reclassified during FY97 only	103	6,150	6,679	8.6
Urban	34	7,091	7,658	8.0
Rural	69	4,374	4,831	10.5
Reclassified during FY96 only	251	5,658	5,630	−0.5
Urban	88	7,131	7,189	0.8
Rural	163	4,515	4,421	−2.1
FY 97 Reclassifications: All reclassified hosp.	484	5,922	6,176	4.3
Stand. amt. Only	120	5,764	5,944	3.1
Wage index only	274	5,839	6,065	3.9
Both	90	6,205	6,571	5.9
Nonreclass.	4,619	6,548	6,745	3.0
All urban reclass.	167	6,837	7,150	4.6
Stand. amt. only	63	6,230	6,433	3.3
Wage index only	30	9,311	9,728	4.5
Both	74	6,370	6,727	5.6
Nonreclass.	2,711	7,018	7,235	3.1
All rural reclass.	317	4,909	5,096	3.8
Stand. amt. only	57	4,623	4,749	2.7
Wage index only	244	4,968	5,146	3.6
Both	16	4,898	5,345	9.1
Nonreclass.	1,908	4,063	4,152	2.2
Other reclassifed:				
Hospitals (section 1886(d)(8)(B))	27	4,611	4,756	3.1

[1] These payment amounts per case do not reflect any estimates of annual case-mix increases.

Table II presents the projected impact of the proposed changes for FY 1997 for urban and rural hospitals and for the different categories of hospitals shown in Table I. It compares the projected payments per case for FY 1997 with the average estimated per case payments for FY 1996, as calculated under our models. Thus, this table presents, in terms of the average dollar amounts paid per discharge, the combined effects of the changes presented in Table I. The percentage changes shown in the last column of Table I equal the percentage changes in average payments from column 5 of Table I.

VII. Impact of Proposed Changes in the Capital Prospective Payment System

A. General Considerations

We now have data that were unavailable in previous impact analyses for the capital prospective payment system. Specifically, we have cost report data for the third year of the capital prospective payment system (cost reports beginning in FY 1994) available through the March 1996 update of the Hospital Cost Report Information System (HCRIS). We also have updated information on the projected aggregate amount of obligated capital approved by the fiscal intermediaries. However, our impact analysis of payment changes for capital-related costs is still limited by the lack of hospital-specific data on several items. These are the hospital's projected new capital costs for each year, its projected old capital costs for

each year, and the actual amounts of obligated capital that will be put in use for patient care and recognized as Medicare old capital costs in each year. The lack of such information affects our impact analysis in the following ways:

• Major investment in hospital capital assets (for example in building and major fixed equipment) occurs at irregular intervals. As a result, there can be significant variation in the growth rates of Medicare capital-related costs per case among hospitals. We do not have the necessary hospital-specific budget data to project the hospital capital growth rate for individual hospitals.

• Moreover, our policy of recognizing certain obligated capital as old capital makes it difficult to project future capital-related costs for individual hospitals. Under § 412.302(c), a hospital is required to notify its intermediary that it has obligated capital by the later of October 1, 1992, or 90 days after the beginning of the hospital's first cost reporting period under the capital prospective payment system. The intermediary must then notify the hospital of its determination whether the criteria for recognition of obligated capital have been met by the later of the end of the hospital's first cost reporting period subject to the capital prospective payment system or 9 months after the receipt of the hospital's notification. The amount that is recognized as old capital is limited to the lesser of the actual allowable costs when the asset is put in use for patient care or the estimated costs of the capital expenditure at the time it was obligated. We have substantial information regarding intermediary determinations of projected aggregate obligated capital amounts. However, we still do not know when these projects will actually be put into use for patient care, the actual amount that will be recognized as obligated capital when the project is put into use, or the Medicare share of the recognized costs. Therefore, we do not know actual obligated capital commitments for purposes of the FY 1997 capital cost projections. We discuss in Appendix B the assumptions and computations we employ to generate the amount of obligated capital commitments for use in the FY 1997 capital cost projections.

In Table III of this appendix, we present the redistributive effects that are expected to occur between ''hold-harmless'' hospitals and ''fully prospective'' hospitals in FY 1997. In addition, we have integrated sufficient hospital-specific information into our actuarial model to project the impact of the proposed FY 1997 capital payment policies by the standard prospective payment system hospital groupings. We caution that while we now have actual information on the effects of the transition payment methodology and interim payments under the capital prospective payment system and cost report data for most hospitals, we need to randomly generate numbers for the change in old capital costs, new capital costs for each year, and obligated amounts that will be put in use for patient care services and recognized as old capital each year. We continue to be unable to predict accurately FY 1997 capital costs for individual hospitals, but with the more recent data on the experience to date under the capital prospective payment system, there is adequate information to estimate the aggregate impact on most hospital groupings.

We present the transition payment methodology by hospital grouping in Table IV. In Table V we present the results of the cross-sectional analysis using the results of our actuarial model. This table presents the aggregate impact of the FY 1997 payment policies.

B. Projected Impact Based on the Proposed FY 1997Actuarial Model

1. Assumptions

In this impact analysis, we model dynamically the impact of the capital prospective payment system from FY 1996 to FY 1997 using a capital acquisition model. The FY 1997 model, described in Appendix B of this proposed rule, integrates actual data from individual hospitals with randomly generated capital cost amounts. We have capital cost data from cost reports beginning in FY 1989 through FY 1994 received through the March 1996 update of the Hospital Cost Reporting Information System (HCRIS), interim payment data for hospitals already receiving capital prospective payments through PRICER, and data reported by the intermediaries that include the hospital-specific rate determinations that have been made through January 1, 1996 in the Provider-Specific file. We used this data to determine the proposed FY 1997 capital rates. However, we do not have individual hospital data on old capital changes, new capital formation, and actual obligated capital costs. We have data on costs for capital in use in FY 1993, and we age that capital by a formula described in Appendix B. We therefore need to randomly generate only new capital acquisitions for any year after FY 1993. All Federal rate payment parameters are assigned to the applicable hospital.

For purposes of this impact analysis, the FY 1997 actuarial model includes the following assumptions:

• Medicare inpatient capital costs per discharge will increase at the following rates during these periods:

AVERAGE PERCENTAGE INCREASE IN CAPITAL

Fiscal year	Costs per discharge
1995	−1.50
1996	5.05
1997	5.21

• The Medicare case-mix index will increase by 1.6 percent in FY 1996 and FY 1997.

• The Federal capital rate as well as the hospital-specific rate is updated in FY 1996 by an analytical framework that considers changes in the prices associated with capital-related costs, and adjustments to account for forecast error, changes in the case-mix index, allowable changes in intensity, and other factors. The proposed FY 1997 update for inflation is 1.00 percent (see Addendum, Part III).

2. Results

We have used the actuarial model to estimate the change in payment for capital-related costs from FY 1996 to FY 1997. Table III shows the effect of the capital prospective payment system on low capital cost hospitals and high capital cost hospitals. We consider a hospital to be a low capital cost hospital if, based on a comparison of its initial hospital-specific rate and the applicable Federal rate, it will be paid under the fully prospective payment methodology. A high capital cost hospital is a hospital that, based on its initial hospital-specific rate, will be paid under the hold-harmless payment methodology. Based on our actuarial model, the breakdown of hospitals is as follows:

CAPITAL TRANSITION PAYMENT METHODOLOGY

Type of hospital	Percent of hospitals	FY 1997 percent of discharges	FY 1997 percent of capital costs	FY 1997 percent of capital payments
Low Cost Hospital	66	62	53	56
High Cost Hospital	34	38	47	44

A low capital cost hospital may request to have its hospital-specific rate redetermined based on old capital costs in the current year, through the later of the hospital's cost reporting period beginning in FY 1994 or the first cost reporting period beginning after obligated capital comes into use (within the limits established in § 412.302(e) for putting obligated capital in use for patient care). If the redetermined hospital-specific rate is greater than the adjusted Federal rate, these hospitals will be paid under the hold-harmless payment methodology. Regardless of whether the hospital became a hold-harmless payment hospital as a result of a redetermination, we have continued to show these hospitals as low capital cost hospitals in Table III.

Assuming no behavioral changes in capital expenditures, Table III displays the percentage change in payments from FY 1996 to FY 1997 using the above described actuarial model.

TABLE III.—IMPACT OF PROPOSED CHANGES FOR FY 1997 ON PAYMENTS PER DISCHARGE

FY 1996 payments per discharge

	Number of hospitals	Discharges	Adjusted federal payment	Average federal percent	Hospital specific payment	Hold harmless payment	Exceptions payment	Total payment
Low Cost Hospitals	3,367	6,543,036	$413.51	55.01	$200.60	$15.30	$16.59	$646.01
Fully Prospective	1,472	2,953,665	373.96	50.00	236.94	.....	11.59	622.49
Rebase—Fully Prospective	1,561	2,777,809	373.98	50.00	220.57	.....	23.17	617.72
Rebase—100% Federal Rate	237	633,924	798.96	100.00	.....	.....	0.05	799.00
Rebase—Hold Harmless	97	177,638	313.93	44.64	.....	563.62	55.92	933.48
High Cost Hospitals	1,737	4,044,123	665.47	85.61	.....	152.51	16.36	834.35
100% Federal Rate	1,126	2,842,423	788.87	100.00	.....	.....	2.30	791.18
Hold Harmless	611	1,201,700	373.59	49.81	.....	513.26	49.61	936.46
Total Hospitals	5,104	10,587,159	509.76	66.94	123.98	67.71	16.50	717.95

FY 1997 payments per discharge

	Number of hospitals	Discharges	Adjusted federal payment	Average federal percent	Hospital specific payment	Hold harmless payment	Exceptions payment	Total payment	Percent change
Low Cost Hospitals	3,367	6,720,494	$472.14	64.07	$157.08	$12.37	$38.44	$680.03	5.27
Fully Prospective	1,472	3,033,773	438.87	60.00	185.55	.....	34.06	658.48	5.78
Rebase—Fully Prospective	1,561	2,853,148	440.66	60.00	172.70	.....	45.15	658.50	6.60
Rebase—100% Federal Rate	243	657,828	785.22	100.00	.....	.....	0.58	785.81	-1.65
Rebase—Hold Harmless	91	175,744	385.79	55.77	.....	473.19	146.68	1,005.66	7.73
High Cost Hospitals	1,737	4,153,806	691.63	89.42	.....	123.03	48.28	862.93	3.43
100% Federal Rate	1,164	2,988,949	780.85	100.00	.....	.....	11.02	791.87	0.09
Hold Harmless	573	1,164,856	462.69	61.34	.....	438.70	143.88	1,045.27	11.62
Total Hospitals	5,104	10,874,300	555.98	74.04	97.08	54.64	42.20	749.90	4.45

Under section 1886(g)(1)(A) of the Act, aggregate payments under the capital prospective payment system for FY 1992 through 1995 respectively, were projected to equal 90 percent of payments that would have been payable on a reasonable cost basis in each year. With the expiration of the capital budget neutrality provision, we now estimate that there was an aggregate 27.73 percent increase in FY 1996 Medicare capital payments over the FY 1995 payments. With the proposed Federal rate, we estimate aggregate Medicare capital payments will increase by 7.28 percent in FY 1997.

We project that low capital cost hospitals paid under the fully prospective payment methodology will experience an average increase in payments per case of 5.27 percent, and high capital cost hospitals will experience an average increase of 3.43 percent.

For hospitals paid under the fully prospective payment methodology, the Federal rate payment percentage will increase from 50 percent to 60 percent and the hospital-specific rate payment percentage will decrease from 50 to 40 percent in FY 1997. The Federal rate payment percentage for hospitals paid under the hold-harmless payment methodology is based on the hospital's ratio of new capital costs to total capital costs. The average Federal rate payment percentage for hospitals receiving a hold-harmless payment for old capital will increase from 49.81 percent to 61.34 percent. We estimate the percentage of hold-harmless hospitals paid based on 100 percent of the Federal rate will increase from 65.8 percent to 67.9 percent.

We expect that the average hospital-specific rate payment per discharge will decrease from $123.98 in FY 1996 to $97.08 in FY 1997. This is partly due to the 3.68 percent decrease in the FY 1997 hospital-specific rate compared to FY 1996.

We are proposing no changes in our exceptions policies for FY 1997. As a result, the minimum payment levels would be:

- 90 percent for sole community hospitals;
- 80 percent for urban hospitals with 100 or more beds and a disproportionate share patient percentage of 20.2 percent or more; or,
- 70 percent for all other hospitals.

We estimate that exceptions payments will increase from 2.30 percent of total capital payments in FY 1996 to 5.63 percent of payments in FY 1997. The number and amount of exceptions payments is expected to increase throughout the transition period. The projected distribution of the payments is shown in the table below:

ESTIMATED FY 1997 EXCEPTIONS PAYMENTS

Type of hospital	Number of hospitals	Percent of exceptions payments
Low Capital Cost	450	58
High Capital Cost	331	42
Total	781	100

C. Cross-Sectional Comparison of Capital Prospective Payment Methodologies

Table IV presents a cross-sectional summary of hospital groupings by capital prospective payment methodology. This distribution is generated by our actuarial model.

TABLE IV.—DISTRIBUTION BY METHOD OF PAYMENT (HOLD-HARMLESS/FULLY PROSPECTIVE) OF HOSPITALS RECEIVING CAPITAL PAYMENTS

	(1) Total Number of Hospitals	(2) Hold-harmless		(3) Percentage paid fully prospective rate
		Percentage paid hold-harmless (A)	Percentage paid fully federal (B)	
By Geographic Location:				
All hospitals	5,104	13.0	27.6	59.4
Large urban areas (populations over 1 million)	1,584	15.6	34.5	49.9
Other urban areas (populations of 1 million or fewer)	1,271	15.1	33.4	51.5
Rural areas	2,249	10.0	19.4	70.6
Urban hospitals	2,855	15.4	34.0	50.6
0–99 beds	698	16.2	27.7	56.2
100–199 beds	933	19.3	36.8	43.9
200–299 beds	577	13.9	37.3	48.9
300–499 beds	479	11.5	32.6	55.9
500 or more beds	168	6.5	37.5	56.0
Rural hospitals	2,249	10.0	19.4	70.6
0–49 beds	1,171	7.1	14.3	78.7
50–99 beds	662	12.8	21.9	65.3
100–149 beds	241	14.5	30.3	55.2
150–199 beds	99	16.2	22.2	61.6
200 or more beds	76	7.9	39.5	52.6
By Region:				
Urban by Region	2,855	15.4	34.0	50.6
New England	160	7.5	25.0	67.5
Middle Atlantic	434	9.9	30.0	60.1
South Atlantic	417	19.2	41.0	39.8
East North Central	480	11.3	28.5	60.2
East South Central	162	19.8	36.4	43.8
West North Central	190	17.4	28.4	54.2
West South Central	366	25.7	47.5	26.8
Mountain	124	15.3	42.7	41.9
Pacific	474	13.3	30.4	56.3
Puerto Rico	48	18.8	16.7	64.6
Rural by Region	2,249	10.0	19.4	70.6

TABLE IV.—DISTRIBUTION BY METHOD OF PAYMENT (HOLD-HARMLESS/FULLY PROSPECTIVE) OF HOSPITALS RECEIVING CAPITAL PAYMENTS—Continued

	(1) Total Number of Hospitals	(2) Hold-harmless		(3) Percentage paid fully prospective rate
		Percentage paid hold-harmless (A)	Percentage paid fully federal (B)	
New England	53	7.5	15.1	77.4
Middle Atlantic	84	6.0	19.0	75.0
South Atlantic	297	13.1	25.3	61.6
East North Central	304	8.6	13.5	78.0
East South Central	278	10.1	30.6	59.4
West North Central	525	7.2	15.0	77.7
West South Central	349	10.0	24.1	65.9
Mountain	213	15.5	12.7	71.8
Pacific	141	11.3	15.6	73.0
Large urban areas (populations over 1 million)	1,780	15.3	34.3	50.4
Other urban areas (populations of 1 million or fewer)	1,175	15.4	32.3	52.3
Rural areas	2,149	9.8	19.4	70.8
Teaching Status:				
Non-teaching	4,031	13.7	26.6	59.7
Fewer than 100 Residents	841	11.1	32.0	57.0
100 or more Residents	232	7.8	28.4	63.8
Disproportionate share hospitals (DSH):				
Non-DSH	3,175	12.7	23.8	63.5
Urban DSH:				
100 or more beds	1,410	15.0	36.2	48.8
Less than 100 beds	110	11.8	25.5	62.7
Rural DSH:				
Sole Community (SCH/EACH)	146	9.6	20.5	69.9
Referral Center (RRC/EACH)	25	8.0	32.0	60.0
Other Rural:				
100 or more beds	89	13.5	39.3	47.2
Less than 100 beds	149	6.7	25.5	67.8
Urban teaching and DSH:				
Both teaching and DSH	682	9.1	32.8	58.1
Teaching and no DSH	337	13.6	27.6	58.8
No teaching and DSH	838	19.3	37.6	43.1
No teaching and no DSH	1,098	16.7	32.7	50.6
Rural Hospital Types:				
NON special status hospitals	1,379	7.6	19.5	72.9
RRC/EACH	90	8.9	37.8	53.3
SCH/EACH	641	14.5	16.4	69.1
SCH, RRC and EACH	39	12.8	20.5	66.7
Type of Ownership:				
Voluntary:				
Voluntary	3,058	12.8	27.7	59.5
Proprietary	691	23.6	46.2	30.2
Government	1,355	8.1	17.9	74.0
Medicare Utilization as a Percent of Inpatient Days:				
0–25	256	14.8	25.0	60.2
25–50	1,285	14.6	33.1	52.3
50–65	2,105	12.9	27.8	59.3
Over 65	1,353	10.4	22.2	67.3

As we explain in Appendix B, we were not able to determine a hospital-specific rate for 26 of the 5,130 hospitals in our data base. Consequently, the payment methodology distribution is based on 5,104 hospitals. This data should be fully representative of the payment methodologies that will be applicable to hospitals.

The cross-sectional distribution of hospital by payment methodology is presented by: (1) geographic location, (2) region, and (3) payment classification. This provides an indication of the percentage of hospitals within a particular hospital grouping that will be paid under the fully prospective payment methodology and under the hold-harmless methodology.

The percentage of hospitals paid fully Federal (100 percent of the Federal rate) as hold-harmless hospitals is expected to increase to 27.6 percent in FY 1997.

Table IV indicates that 59.4 percent of hospitals are paid under the fully prospective payment methodology. (This figure, unlike the figure of 66 percent for low cost capital hospitals in the previous section, takes account of the effects of redeterminations. In other words, this figure does not include low cost hospitals that, following a hospital-specific rate redetermination, are now paid under the hold-harmless methodology.) As expected, a relatively higher percentage of rural and governmental hospitals (70.8 percent and 74.0 percent, respectively by payment classification) are being paid under the fully prospective methodology. This is a reflection of their lower than average capital costs

per case. In contrast, only 30.2 percent of proprietary hospitals are being paid under the fully prospective methodology. This is a reflection of their higher than average capital costs per case. (We found at the time of the August 30, 1991 final rule (56 FR 43430) that 62.7 percent of proprietary hospitals had a capital cost per case above the national average cost per case.)

D. Cross-Sectional Analysis of Changes in Aggregate Payments

We used our FY 1997 actuarial model to estimate the potential impact of our proposed changes for FY 1997 on total capital payments per case, using a universe of 5,104 hospitals. The individual hospital payment parameters are taken from the best available data, including: the January 1, 1996 update to the Provider-Specific file, cost report data, and audit information supplied by intermediaries. Table V presents estimates of payments per case under our model for FY 1996 and FY 1997 (columns 2 and 3). Column 4 shows the total percentage change in payments from FY 1996 to FY 1997. Column 5 presents the percentage change in payments that can be attributed to Federal rate changes alone.

Federal rate changes represented in Column 5 include the 4.36 percent decrease in the Federal rate, a 1.6 percent increase in case mix, changes in the adjustments to the Federal rate (for example, the effect of the new hospital wage index on the geographic adjustment factor), and reclassifications by the Medicare Geographic Classification Review Board. Column 4 includes the effects of the Federal rate changes represented in Column 3. Column 4 also reflects the effects of all other changes, including: the change from 50 percent to 60 percent in the portion of the Federal rate for fully prospective hospitals, the hospital-specific rate update, changes in the proportion of new to total capital for hold-harmless hospitals, changes in old capital (for example, obligated capital put in use), hospital-specific rate redeterminations, and exceptions. The comparisons are provided by: (1) geographic location and (2) payment classification and payment region.

The simulation results show that, on average, capital payments per case can be expected to increase 4.4 percent in FY 1997. The results show that the effect of the Federal rate changes alone is to decrease payments by 0.9 percent. The decrease attributable to the Federal rate changes is more than offset by a 5.3 percent increase is attributable to the effects of all other changes.

Our comparison by geographic location shows that capital payments per case to urban and rural hospitals experience similar rates of increase (4.4 percent and 4.8 percent, respectively). Payments per case for urban hospitals will decrease at about the same rate as payments per case for rural hospitals (0.8 percent and 1.3 percent, respectively) from the Federal rate changes alone. Urban hospitals will gain slightly less than rural hospitals (5.2 percent compared to 6.1 percent) from the effects of all other changes.

By region, there is relatively little variation compared to some previous years. All regions are estimated to receive increases in total capital payments per case, due to the increased share of payments that is based on the Federal rate (from 50 to 60 percent). Changes by region vary from a low of 2.1 percent increase (Middle Atlantic rural region) to a high of 15.6 percent increase (rural hospitals of the New England region).

By type of ownership, government hospitals are projected to have the largest rate of increase (5.1 percent, -1.1 percent due to Federal rate changes and a 6.2 percent positive offset from the effects of all other changes). Payments to voluntary hospitals will increase 4.5 percent (a 0.9 percent decrease due to Federal rate changes and a 5.4 percent positive offset from the effects of all other changes) and payments to proprietary hospitals will increase 3.8 percent (a 0.7 percent decrease due to Federal rate changes and a 4.5 percent positive offset from the effects of all other changes).

Section 1886(d)(10) of the Act established the Medicare Geographic Classification Review Board (MGCRB). Hospitals may apply for reclassification for purposes of the standardized amount, wage index, or both. Although the Federal capital rate is not affected, a hospital's geographic classification for purposes of the operating standardized amount does affect a hospital's capital payments as a result of the large urban adjustment factor and the disproportionate share adjustment for urban hospitals with 100 or more beds. Reclassification for wage index purposes affects the geographic adjustment factor since that factor is constructed from the hospital wage index.

To present the effects of the hospitals being reclassified for FY 1997 compared to the effects of reclassification for FY 1996, we show the average payment percentage increase for hospitals reclassified in each fiscal year and in total. For FY 1997 reclassifications, we indicate those hospitals reclassified for standardized amount purposes only, for wage index purposes only, and for both purposes. The reclassified groups are compared to all other nonreclassified hospitals. These categories are further identified by urban and rural designation.

Hospitals reclassified during FY 1997 as a whole are projected to experience a 5.3 percent increase in payments (a 0.3 percent decrease attributable to Federal rate changes and a 5.6 percent positive offset attributable to the effects of all other changes). Payments to nonreclassified hospitals will increase slightly less (4.3 percent) than reclassified hospitals (5.3 percent) overall. Payments to nonreclassified hospitals will decrease slightly more than reclassified hospitals from the Federal rate changes (1.0 percent compared to 0.3 percent), but they will gain about the same from the effects of all other changes (5.3 percent compared to 5.6 percent).

TABLE V.—COMPARISON OF TOTAL PAYMENTS PER CASE

[FY 1996 Payments Compared to FY 1997 Payments]

	Number of hospitals	Average FY 1996 payments/case	Average FY 1997 payments/case	All changes	Portion attibutable to federal rate change
By Geographic Location:					
All hospitals	5,104	718	750	4.4	−0.9
Large urban areas (populations over 1 million)	1,584	823	858	4.3	−0.9
Other urban areas (populations of 1 million of fewer)	1,271	714	747	4.5	−0.8
Rural areas	2,249	479	503	4.8	−1.3
Urban hospitals	2,855	776	810	4.4	−0.8

TABLE V.—COMPARISON OF TOTAL PAYMENTS PER CASE—Continued

[FY 1996 Payments Compared to FY 1997 Payments]

	Number of hospitals	Average FY 1996 payments/case	Average FY 1997 payments/case	All changes	Portion attibutable to federal rate change
0–99 beds	698	570	594	4.3	−0.9
100–199 beds	933	703	731	4.1	−1.0
200–299 beds	577	744	776	4.2	−0.9
300–499 beds	479	800	838	4.8	−0.8
500 or more beds	168	944	984	4.3	−0.5
Rural hospitals	2,249	479	503	4.8	−1.3
0–49 beds	1,171	368	389	5.8	−1.5
50–99 beds	662	445	468	5.0	−1.2
100–149 beds	241	512	536	4.7	−1.3
150–199 beds	99	517	543	4.9	−1.0
200 or more beds	76	609	633	3.9	−1.5
By Region:					
Urban by Region	2,855	776	810	4.4	−0.8
New England	160	780	818	4.9	−1.5
Middle Atlantic	434	816	855	4.8	−0.8
South Atlantic	417	777	809	4.2	−0.8
East North Central	480	730	759	4.0	−0.7
East South Central	162	707	744	5.3	−0.5
West North Central	190	768	807	5.1	−0.8
West South Central	366	794	825	3.8	−0.3
Mountain	124	774	804	3.8	−1.1
Pacific	474	856	890	4.1	−1.3
Puerto Rico	48	291	313	7.5	−1.1
Rural by Region	2,249	479	503	4.8	−1.3
New England	53	605	699	15.6	−1.8
Middle Atlantic	84	489	499	2.1	−2.4
South Atlantic	297	501	518	3.4	−1.5
East North Central	304	479	506	5.7	−0.9
East South Central	278	453	471	4.0	−1.5
West North Central	525	449	471	5.0	−1.4
West South Central	349	447	467	4.4	−0.9
Mountain	213	507	540	6.4	−0.5
Pacific	141	549	582	6.1	−0.9
By Payment Classification:					
All hospitals	5,104	718	750	4.4	−0.9
Large urban areas (populations over 1 million)	1,780	808	842	4.3	−0.9
Other urban areas (populations of 1 million of fewer)	1,175	714	747	4.6	−0.8
Rural areas	2,149	473	495	4.8	−1.4
Teaching Status:					
Non-teaching	4,031	623	647	3.9	−1.0
Fewer than 100 Residents	841	756	791	4.7	−0.9
100 or more Residents	232	1,039	1,096	5.5	−0.7
Urban DSH:					
100 or more beds	1,410	814	850	4.5	−0.9
Less than 100 beds	110	557	587	5.4	−1.1
Rural DSH:					
Sole Community (SCH/EACH)	146	458	495	8.1	−1.9
Referral Center (RRC/EACH)	25	544	560	2.9	−0.2
Other Rural:					
100 or more beds	89	501	519	3.6	−1.9
Less than 100 beds	149	365	385	5.5	−1.6
Urban teaching and DSH:.					
Both teaching and DSH	682	879	919	4.6	−0.8
Teaching and no DSH	337	786	827	5.3	−0.8
No teaching and DSH	838	712	743	4.4	−0.9
No teaching and no DSH	1,098	672	695	3.4	−0.8
Rural Hospital Types:					
Non special status hospitals	1,379	439	458	4.3	−1.7
RRC/EACH	90	559	574	2.5	−0.8
SCH/EACH	641	471	506	7.4	−1.2
SCH, RRC and EACH	39	577	608	5.4	−1.0
Hospitals Reclassified by the Medicare Geographic Classification Review Board:					
Reclassification Status During FY96 and FY97:					
Reclassified During Both FY96 and FY97	381	668	698	4.5	−1.1
Reclassified During FY97 Only	103	678	736	8.6	2.9
Reclassified During FY96 Only	228	631	640	1.4	−3.6
FY97 Reclassifications:					
All Reclassified Hospitals	484	670	706	5.3	−0.3

TABLE V.—COMPARISON OF TOTAL PAYMENTS PER CASE—Continued

[FY 1996 Payments Compared to FY 1997 Payments]

	Number of hospitals	Average FY 1996 payments/case	Average FY 1997 payments/case	All changes	Portion attibutable to federal rate change
All Nonreclassified Hospitals	4,593	725	756	4.3	−1.0
All Urban Reclassified Hospitals	167	762	799	4.9	−0.3
Urban Nonreclassified Hospitals	2,688	777	811	4.3	−0.9
All Reclassified Rural Hospitals	317	568	602	6.0	−0.3
Rural Nonreclassified Hospitals	1,905	443	463	4.3	−1.8
Other Reclassified Hospitals (Section 1886 (D)(8)(B))	27	552	575	4.1	−1.3
Type of Ownership:					
Voluntary	3,058	732	765	4.5	−0.9
Proprietary	691	748	776	3.8	−0.7
Government	1,355	618	649	5.1	−1.1
Medicare Utilization as a Percent of Inpatient Days:					
0–25	256	793	847	6.8	−1.4
25–50	1,285	844	880	4.2	−0.8
50–65	2,105	675	706	4.6	−0.9
Over 65	1,353	603	628	4.1	−1.0

Appendix B: Technical Appendix on the Capital Acquisition Model and Required Adjustments

Under section 1886(g)(1)(A) of the Act, we set capital prospective payment rates for FY 1992 through FY 1995 so that aggregate prospective payments for capital costs were projected to be 10 percent lower than the amount that would have been payable on a reasonable cost basis for capital-related costs in that year. To implement this requirement, we developed the capital acquisition model to determine the budget neutrality adjustment factor. Even though the budget neutrality requirement expires effective with FY 1996, we must continue to determine the recalibration and geographic reclassification budget neutrality adjustment factor, and the reduction in the Federal and hospital-specific rates for exceptions payments. We continue to use the capital acquisition model to determine these factors.

The following data are used in the capital acquisition model for FY 1997: the March 8, 1996 update of the cost reports for PPS–IX (cost reporting periods beginning in FY 1992), PPS–X (cost reporting periods beginning in FY 1993) and PPS–XI (cost reporting periods beginning in FY 1994), the January 1, 1996 update of the provider-specific file, and the March 1994 update of the intermediary audit file. The available data still lack certain items that were required for the determination of budget neutrality, including each hospital's projected new capital costs for each year, its projected old capital costs for each year, and the projected obligated capital amounts that will be put in use for patient care services and recognized as old capital each year.

Since hospitals under alternative payment system waivers (that is, hospitals in Maryland) are currently excluded from the capital prospective payment system, we excluded these hospitals from our model.

We then developed FY 1992, FY 1993, FY 1994, FY 1995, and FY 1996 hospital-specific rates using the provider-specific file, the intermediary audit file, and, when available, cost reports. (We used the cumulative provider-specific file, which includes all updates to each hospital's records, and chose the latest record for each fiscal year.) We checked the consistency between the provider-specific file and the intermediary audit file. We also ensured that the FY 1993 increase in the hospital-specific rate was at least 0.62 percent (the net FY 1993 update), that the FY 1994 hospital-specific rate was at least as large as the FY 1993 hospital-specific rate decreased by 2.16 percent (the net FY 1994 update), that the FY 1995 increase in the hospital-specific rate was at least 0.05 percent (the net FY 1995 update), and that the FY 1996 increase in the hospital-specific rate was at least 21.10 percent (the net FY 1996 update). We were able to match hospitals to the files as shown in the following table.

Source	Number of hospitals
Provider-Specific File Only	101
Provider-Specific and Audit File	5029
Total	5130

Sixty-eight of these hospitals had unusable or missing data. We were able to backfill a hospital-specific rate for 42 of these hospitals from the cost reports as shown in the following table.

Source	Number of hospitals
PPS–VII Cost Reports	1
PPS–VIII Cost Reports	2
PPS–IX Cost Reports	3
PPS–X Cost Reports	7
PPS–XI Cost Reports	29
Total	42

We did not have data for 26 hospitals, and had to eliminate them from the capital analysis. These hospitals likely are new hospitals or hospitals with very few Medicare admissions. This leaves us with 5104 hospitals and should not affect the precision of the required adjustment factors.

Next, we determined old and new capital amounts for FY 1992 using the PPS–IX cost reports as the first source of data. For FY 1993 amounts, we used PPS–IX and PPS–X cost reports as the first source of data, weighting each cost report by the number of days in FY 1993. For FY 1994 amounts, we used PPS–X and PPS–XI cost reports as the first source of data, weighting each cost report by the number of days in FY 1994. We were able to match 5,049 PPS–IX cost reports, 5,062 PPS–X cost reports, and 4,654 PPS–XI cost reports. In cases where cost reports could not be matched, we used the provider-specific file for old capital information. Even in cases where a cost report was available, the breakout of old and new capital was not always available. In these cases, we used the old capital amounts and new capital ratios from the provider-specific file. If these were missing, we derived

the old capital amount from the hospital-specific rate.

Finally, we used the intermediary audit file to develop obligated capital amounts. Since the obligated amounts are aggregate projected amounts, we computed a Medicare capital cost per admission associated with these amounts. We adjusted the aggregate amounts by the following factors:

(1) Medicare inpatient share of capital. This was derived from cost reports and was limited to the Medicare share of total inpatient days. It was necessary to limit the Medicare share because of data integrity problems. Medicare share of inpatient days is a reasonably good proxy for allocating capital. However, it may be understated if Medicare utilization is high, and may be overstated because it does not reflect the outpatient share of capital.

(2) Capitalization factor. This factor allocates the aggregate amount of obligated capital to depreciation and interest amounts. Consistent with the assumptions in the capital input price index, we used a 25-year life for fixed capital and a 10-year life for movable capital, and an average projected interest rate of 6.7 percent. We also assumed that fixed capital acquisitions are about one-half of total capital. In conjunction with the useful life and interest rate assumptions, the resulting capitalized fixed capital is about one-half of total capitalization. This is consistent with the allocations between fixed and movable capital found on the cost reports. The ratio we developed is 0.137, which produces the first year capitalization based on the aggregate amount.

(3) A divisor of Medicare admissions to derive the capital costs per discharge amount. Since we must project capital amounts for each hospital, we continued to use a Monte Carlo simulation to develop these amounts. (This model is described in detail in the August 30, 1991 final rule (56 FR 43517).) The Monte Carlo simulation is now used only to project capital costs per discharge amounts for each hospital. We analyzed the distributions of capital increases, and noted a slightly negative correlation between the dollar level of capital cost per admission, and the rate of increase in capital. To determine the rate of increase in capital cost per admission, we multiplied the lesser of $3,000 or the capital cost per admission by .00006 and subtracted this result from 1.2. (Increases for capital levels over $3,000 were not influenced by the level of capital, so this part of the calculation was capped at $3,000.) We selected a random number from the normal distribution, multiplied it by 0.17 (the standard deviation) and added it to −0.04 (the mean) and then added 1 to create a multiplier. This random result was multiplied by the previous result to assign a rate of increase factor which was multiplied by the prior year's capital per discharge amount to develop a capital per discharge amount for the projected year.

To model a projected year, we used the old and new capital for the prior year multiplied by 0.85 (aging factor). The 0.85 aging factor is the average of changes in capital over its life due to the gradual decrease in interest payments and the retirement of fully depreciatiated capital. The aged new and old capital is subtracted from the projected capital described in the previous paragraph. The difference represents newly acquired capital. If the hospital has obligated capital, any increase in ''old'' capital up to the total amount of obligated capital in FY 1993 and FY 1994 is assigned to obligated capital. Any remaining obligated capital is assigned to FY 1995 up to the amount of the modeled increase in capital for FY 1995. Even though obligated capital must be put in use for patient care by October 1, 1994, the use of the obligated capital may have started late in FY 1994 with only part of the ''first year'' depreciation and interest realized in FY 1994. The remainder of the ''first year'' depreciation and interest would be realized in FY 1995. With the exception of certain hospitals about whom we have information to the contrary, we assume that hospitals would meet the expiration dates provided under the obligated capital provision. Hence, no obligated capital is assigned to years FY 1996 and later. Once obligated capital is assigned, it is included with the ''old'' capital and is capitalized into future years as part of ''old'' capital. The on-line obligated amounts are added to old capital and subtracted from the newly acquired capital to yield residual newly acquired capital, which is then added to new capital. The residual newly acquired capital is never permitted to be less than zero.

Next, we computed the average total capital cost per discharge from the capital costs that were generated by the model and compared the results to total capital costs per discharge that we had projected independently of the model. We adjusted the newly acquired capital amounts proportionately, so that the total capital costs per discharge generated by the model match the independently projected capital costs per discharge.

Once each hospital's capital-related costs are generated, the model projects capital payments. We use the actual payment parameters (for example, the case-mix index and the geographic adjustment factor) that are applicable to the specific hospital.

To project capital payments, the model first assigns the applicable payment methodology (fully prospective or hold-harmless) to the hospital. If available, the model uses the payment methodology indicated in the PPS–IX cost reports or the provider-specific file. Otherwise, the model determines the methodology by comparing the hospital's FY 1992 hospital-specific rate to the adjusted Federal rate applicable to the hospital. The model simulates Federal rate payments using the assigned payment parameters and hospital-specific estimated outlier payments. The case-mix index for a hospital is derived from the FY 1995 MedPAR file using the FY 1997 DRG relative weights published in this proposed rule. The case-mix index is increased each year after FY 1995 based on analysis of past experiences in case-mix increases.

We analyzed the case-mix increases for the recent past and found that case-mix increases have decelerated to about 1.53 percent in FY 1992, 0.80 percent in FY 1993, and 0.75 percent in FY 1994. It appears that the case-mix increase for FY 1995 accelerated to around 1.6 percent. Early indications show that FY 1996 case-mix is increasing at FY 1995 level, around 1.6 percent. It appears that the deceleration of case-mix increases in FY 1993 and FY 1994 were anomalous, rather than the beginning of a trend. Therefore, in the model we are using the recent experience and have used a case-mix increase of 1.6 percent in FY 1995 and a projected case-mix increase of 1.6 percent in both FY 1996 and FY 1997. (Since we are using FY 1995 cases for our analysis, the FY 1995 increase in case mix has no effect on projected capital payments.)

Changes in geographic classification and revisions to the hospital wage data used to establish the hospital wage index affect the geographic adjustment factor. Changes in the DRG classification system and the relative weights affect the case-mix index.

Section 1886(g)(1)(A) of the Act requires that, for discharges occurring after September 30, 1993, the unadjusted standard Federal rate be reduced by 7.4 percent. Consequently, the model reduces the unadjusted standard Federal rate by 7.4 percent effective in FY 1994. Since budget neutrality expires effective with FY 1996, this adjustment affects the adjusted Federal rate starting in FY 1996.

Section 412.308(c)(4)(ii) requires that the estimated aggregate payments for the fiscal year, based on the Federal rate after any changes resulting from DRG reclassifications and recalibration and the geographic adjustment factor, equal the estimated aggregate payments based on the Federal rate that would have been made without such changes. For FY 1996, the budget neutrality adjustment factor was 1.0025. To determine the factor for FY 1997, we first determined the portion of the Federal rate that would be paid for each hospital in FY 1997 based on its applicable payment methodology. Using our model, we then compared estimated aggregate Federal rate payments based on the FY 1996 DRG relative weights and the FY 1996 geographic adjustment factor to estimated aggregate Federal rate payments based on the FY 1997 relative weights and the FY 1997 geographic adjustment factor. In making the comparison, we held the FY 1997 Federal rate portion constant and set the other budget neutrality adjustment factor and the exceptions reduction factor to 1.00. We determined that to achieve budget neutrality for the changes in the geographic adjustment factor and DRG classifications and relative weights, an incremental budget neutrality adjustment of 0.9992 for FY 1997 should be applied to the previous cumulative FY 1996 adjustment of 1.0025 (the product of the FY 1993 incremental adjustment of 0.9980, the FY 1994 incremental adjustment of 1.0053, the FY 1995 incremental adjustment of 0.9998, and the FY 1996 incremental adjustment of 0.9994), yielding a cumulative adjustment of 1.0017 through FY 1997.

The methodology used to determine the recalibration and geographic (DRG/GAF) budget neutrality adjustment factor is similar to that used in establishing budget neutrality adjustments under the prospective payment system for operating costs. One difference is that under the operating prospective payment system, the budget neutrality adjustments for the effect of geographic reclassifications are determined separately from the effects of other changes in the hospital wage index and the DRG relative weights. Under the capital prospective payment system, there is a single DRG/GAF budget neutrality adjustment factor for changes in the geographic adjustment factor (including geographic reclassification) and the DRG relative weights. In addition, there is no adjustment for the effects that geographic reclassification has on the other payment parameters, such as the payments for serving low income patients or the large urban add-on.

In addition to computing the DRG/GAF budget neutrality adjustment factor, we used the model to simulate total payments under the prospective payment system.

Additional payments under the exceptions process are accounted for through a reduction in the Federal and hospital-specific rates. Therefore, we used the model to calculate the exceptions reduction factor. This exceptions reduction factor ensures that aggregate payments under the capital prospective payment system, including exceptions payments, are projected to equal the aggregate payments that would have been made under the capital prospective payment system without an exceptions process. Since changes in the level of the payment rates change the level of payments under the exceptions process, the exceptions reduction factor must be determined through iteration.

In the August 30, 1991 final rule (56 FR 43517), we indicated that we would publish each year the estimated payment factors generated by the model to determine payments for the next 5 years. The table below provides the actual factors for FY 1992, FY 1993, FY 1994, FY 1995, FY 1996, the proposed FY 1997 factor, and the estimated factors that would be applicable through FY 2001. We caution that, except with respect to FY 1992, FY 1993, FY 1994, FY 1995 and FY 1996, these are estimates only, and are subject to revisions resulting from continued methodological refinements, more recent data, and any payment policy changes that may occur. In this regard, we note that in making these projections we have assumed that the cumulative DRG/GAF adjustment factor will remain at 1.0017 for FY 1997 and later because we do not have sufficient information to estimate the change that will occur in the factor for years after FY 1997.

The projections are as follows:

Fiscal year	Update factor	Exceptions reduction factor	Budget neutrality factor	Federal rate (after outlier) reduction)
1992	N/A	0.9813	0.9602	415.59
1993	6.07	.9756	.9162	[1] 417.29
1994	3.04	.9485	.8947	[2] 378.34
1995	3.44	.9734	.8432	[3] 376.83
1996	1.20	.9849	N/A	[4] 461.96
1997	1.00	.9393	N/A	[5] 441.84
1998	1.00	.9161	N/A	435.23
1999	1.00	.9228	N/A	442.80
2000	1.10	.9155	N/A	444.13
2001	1.10	N/A[6]	N/A	490.46

[1] **Note:** Includes the DRG/GAF adjustment factor of 0.9980 and the change in the outlier adjustment from 0.9497 in FY 1992 to 0.9496 in FY 1993.

[2] **Note:** Includes the 7.4 percent reduction in the unadjusted standard Federal rate. Also includes the DRG/GAF adjustment factor of 1.0033 and the change in the outlier adjustment from 0.9496 in FY 1993 to 0.9454 in FY 1994.

[3] **Note:** Includes the DRG/GAF adjustment factor of 1.0031 and the change in the outlier adjustment from 0.9454 in FY 1994 to 0.9414 in FY 1995.

[4] **Note:** Includes the the transfer adjustment of .9972. Also includes the DRG/GAF adjustment factor of 1.0025 and the change in the outlier adjustment from 0.9414 in FY 1995 to 0.9536 in FY 1996.

[5] **Note:** Includes the DRG/GAF adjustment factor of 1.0017 and the change in the outlier adjustment from 0.9536 in FY 1996 to 0.9476 in FY 1997. Future adjustments are, for purposes of this projection, assumed to remain at the same level.

[6] **Note:** We are unable to estimate exceptions payments for the year under the special exceptions provision (§ 412.348(g) of the regulations) because the regular exceptions provision (§ 412.348(e)) expires.

Appendix C: Rebased Market Basket Data Sources I. Data Sources Used To Determine the Market Basket Relative Weights and Choice of Price Proxy Variables for the Operating Hospital Input Price Indexes

As discussed in section IV of the preamble to this proposed rule, we are rebasing and revising the hospital market baskets. This appendix describes the technical features of the 1992-based indexes that we are proposing in this rule. For both the prospective payment and excluded hospital market baskets, the differences between the proposed 1992-based market basket and the previous 1987-based market basket are noted. In the September 4, 1990 final rule (55 FR 36170), we discussed in detail the 1987-based hospital market baskets.

We present this description of the hospital operating market baskets in three steps:

- A synopsis of the structural differences between the 1987-based market baskets and the proposed 1992-based market baskets.
- A description of the methodology used to develop the cost category weights in the 1992-based market baskets, making note of the differences from the methodology used to develop the 1987-based market baskets.
- A description of the data sources used to measure price change for each component of the 1992-based market baskets, making note of the differences from the price proxies used in the 1987-based hospital market baskets.

A. Synopsis of Structural Changes Adopted in the Rebased 1992 Operating Hospital Market Baskets

Three major structural differences exist between the 1987-based and the proposed 1992-based operating hospital market baskets.

- The proposed hospital market baskets are based on more recent hospital expenditure data. The 1987-based market baskets contained skeletal cost shares that were derived from the 1987 cost data from the 1988 Annual Survey of the American Hospital Association (AHA). The 1992-based market baskets use data from the hospital cost reports for cost reporting periods beginning on or after October 1, 1991 and before October 1, 1992.
- Some cost categories have been combined, namely Fuel, Oil, Coal, and Other Fuel with Motor Gasoline, and Blood Services with Chemicals. These category mergers reflect the Bureau of Economic Analysis (BEA) reclassification decisions in the 1987 update of the BEA Input-Output Tables.
- In the proposed 1992-based market basket, the sample of excluded hospitals is restricted to more closely reflect the average Medicare length of stay in excluded hospitals. We have used cost report data for excluded hospitals from only those hospitals in which the Medicare average length of stay is within 15 percent of the total average length of stay to more accurately reflect the structure of costs for Medicare cases. This is a change from the FY 1987-based market basket, for which data from all excluded hospitals were used.

B. Methodology for Developing the Cost Category Weights

Cost category weights for the 1992-based market baskets were developed in four stages. First, base weights for three (Wages and Salaries, Employee Benefits, Pharmaceuticals) of the six main categories were derived from the 1992 Medicare cost reports for operating costs. Second, the weight for Nonmedical Professional Fees was developed by subtracting Medical Professional Fees reported in the Hospital Cost Report Information System (HCRIS) file from AHA Annual Survey Total Professional Fees to obtain Nonmedical Professional Fees, and the weight for Professional Liability Insurance was developed using 1989 HCRIS data trended forward to 1992, using the relative importance values in the previous market baskets. Third, the sum of Wages and Salaries, Employee Benefits, Pharmaceuticals, Nonmedical Professional Fees, and Professional Liability Insurance was subtracted from total expenses to obtain All Other Expenses. Finally, the weight for All Other Expenses was divided into subcategories using cost shares from the 1987 Input-Output Table for the hospital industry, produced by the U.S. Department of Commerce, Bureau of Economic Analysis, aged to 1992 using price changes. We will incorporate 1992 data from the U.S. Department of Commerce into the final market basket if the data are released in time to be analyzed in developing the final rule.

Below, we describe the source of the six main category weights and their subcategories in the 1992-based market baskets. We make note of the differences between the methodologies used to develop the 1987-based and the 1992-based market baskets.

1. Wages and Salaries: The cost weight for the Wages and Salaries category was derived using the 1992 Medicare cost reports. Contract Labor, which is also derived from the 1992 Medicare cost reports, is split between the Wages and Salaries and Employee Benefits cost categories, using the relationship for employed workers. Examples of Contract Labor are registered nurses and workers in hospital food service or security who are employed and paid by firms that contract for their work with the hospital. The Wages and Salaries cost category was disaggregated into nine occupational subcategories (professional and technical, managers and administration, sales, clerical, craft and kindred, operatives excluding transport, transport equipment operatives, nonfarm laborers and service workers) to reflect the mix of occupational inputs used by hospitals. The Contract Labor wages and salaries component was allocated proportionally to Professional-Technical and Service occupations. The 1987-based weights were developed from the 1987 Current Population Survey, while the 1992-based weights were developed from the 1992 Current Population Survey.

2. Employee Benefits: The cost weight for the employee benefits category was derived from the 1992 cost reports. Like wages and salaries, the employee benefit weight in each 1992-based market basket is a composite of nine labor subcategories. The employee benefits categories in the 1987-based market baskets were developed from the 1987 AHA Annual Survey and used the 1987 Current Population Survey. In 1987 Contract Labor's implied fringe benefits were allocated proportionally to Professional and Technical occupations, while in 1992 they were allocated to Professional-Technical and Service occupations.

3. Nonmedical Professional Fees: The cost weight for the nonmedical professional fees category was derived from the 1992 Medicare Cost Reports and AHA Annual Survey data. Total professional fees were split into the subcategories medical and other (nonmedical) fees using AHA Total Professional Fees minus HCRIS Medical Professional Fees to equal Nonmedical Professional Fees. The 1987-based nonmedical professional fees cost category was derived from the 1987 AHA Annual Survey and American Medical Association (AMA) data. It was split into the subcategories medical and other fees using data derived from the American Medical Association. The medical professional fees category is excluded from the hospital market basket since it is paid under Medicare Part B.

4. Professional Liability Insurance: The 1987-based market baskets have weights for professional liability insurance that were derived from the June 30 and December 31, 1987 HAS/Monitrend surveys. The cost weight for

the 1992-based professional liability insurance category was derived from 1989 HCRIS cost shares trended to 1992 using the change in the relative importance factor for professional liability insurance (malpractice) from the previous 1987-based prospective payment hospital and excluded hospital market baskets.

5. Utilities: For the 1987-based market baskets, the cost weight for utilities was derived by extrapolating the 1985 AHA Annual Survey utilities cost weight forward to 1987 using the rate of growth in the HAS/Monitrend cost weight for utilities between 1985 and 1987. The 1987 Utility subcategory weights were aged from their 1982-based index subcategory weights using price changes from 1982 to 1987. The 1992-based market basket cost weights for the subcategories (fuel, oil and gasoline; electricity; natural gas; and water and sewage) were derived from the Bureau of Economic Analysis' 1987 Input-Output table for the hospital industry, aged forward to 1992 by price changes and summed to a weight for utilities.

6. All Other Goods and Services: The all other goods and services category has more subcategories than any other market basket category. Goods found in this category include: direct service food, contract service food, pharmaceuticals, chemicals, medical instruments, photo supplies, rubber and plastics, paper products, apparel, machinery and equipment and miscellaneous products. Services found in this category include: business services, computer services, transportation and shipping, telephone, postage, other labor-intensive services, and other nonlabor-intensive services. The share for pharmaceuticals was derived from the 1992 Medicare cost reports. Relative shares for the other subcategories were derived from the 1987 Bureau of Economic Analysis' Input-Output table for the hospital industry and were aged forward to 1992 using price changes. As noted above, if more recent U.S. Department of Commerce data become available for these categories and we have time to analyze these data before the publication of the final rule, they will be incorporated into the final market baskets.

C. Price Proxies Used to Measure Cost Category Growth

1. Wages and Salaries: For measuring price growth in the 1992-based market basket, 10 price proxies are applied to the 9 occupational subcategories within the wages and salaries component. As in the 1987-based market basket, the professional and technical subcategory was split in half. An Employee Cost Index (ECI) for hourly wages paid to civilian hospital workers was applied to one half. An ECI of hourly wages and salaries paid to professional and technical workers in private industry was applied to the other half of the professional and technical component. The other eight occupations subcategories of the wages and salaries component were proxied using ECIs for wages and salaries for private industry workers in their respective occupational categories.

2. Employee Benefits: The 1992-based hospital market baskets use occupation-specific ECIs for employee benefits. The distribution of weights and price proxies is the same as for wages and salaries discussed above, but occupation-specific employee benefit ECIs replace occupation-specific wages and salaries ECIs. The components are summed into a composite index, just as was done for the 1987-based market basket.

3. Nonmedical Professional Fees: The ECI for compensation for professional and technical workers in private industry is applied to this category. This is a revision from the 1987-based market basket in which the ECI for wages and salaries for professional and technical workers in private industry was used.

4. Fuel, Oil, and Gasoline: The percentage change in the price of refined petroleum products as measured by the Producer Price Index (PPI) (Commodity Code #057) was applied to this component. This is a revision from the 1987-based indexes in which the PPIs for Light Fuel Oil (Commodity Code #0573) and Gasoline (Commodity Code #0571) were used.

5. Electricity: The percentage change in the price of commercial electric power as measured by the PPI (Commodity Code #0542) was applied to this component. This is a revision from the 1987-based indexes in which the PPI for industrial power (Commodity Code #0543) was used.

6. Natural Gas: The percentage change in the price of gas fuels as measured by the PPI (Commodity Code #0552) was applied to this component. This is a revision from the 1987-based indexes in which the PPI for Natural Gas (Commodity Code #0531) was used.

7. Water and Sewerage: The percentage change in the price of water and sewerage maintenance as measured by the Consumer Price Index (CPI) for all urban consumers was applied to this component. The same price measure was used in the 1987-based market baskets.

8. Professional Liability Insurance: The percentage change in the hospital professional liability insurance price as estimated by hospital industry professional liability insurance premium increase was applied to this component. The same price measure was used in the 1987-based market baskets.

9. Pharmaceuticals: The percentage change in the price of ethical preparations as measured by the PPI (Commodity Code #0635) was applied to this variable. The same price measure was used in the 1987-based market baskets.

10. Food, Direct Purchases: The percentage change in the price of processed foods and feeds as measured by the PPI (Commodity Code #02) was applied to this component. The same price measure was used in the 1987-based market baskets.

11. Food, Contract Services: The percentage change in the price of food purchased away from home as measured by the CPI for all urban consumers was applied to this component. The same price measure was used in the 1987-based market baskets.

12. Chemicals: The percentage change in the price of industrial chemical products as measured by the PPI (Commodity Code #061) was applied to this component. The same price measure was used in the 1987-based market baskets.

13. Surgical and Medical Equipment: The percentage change in the price of medical and surgical instruments as measured by the PPI (Commodity Code #1562) was applied to this component. The same price measure was used in the 1987-based market baskets.

14. Photographic Supplies: The percentage change in the price of photographic supplies as measured by the PPI (Commodity Code #1542) was applied to this component. The same price measure was used in the 1987-based market baskets.

15. Rubber and Plastics: The percentage change in the price of rubber and plastic products as measured by the PPI (Commodity Code #07) was applied to this component. The same price measure was used in the 1987-based market baskets.

16. Paper Products: The percentage change in the price of converted paper and paperboard products as measured by the PPI (Commodity Code # 0915) was used. This is a revision from the 1987-based indexes in which a weighted average of the percentage change in the price of converted paper and paperboard products and the percentage change in the price of paper excluding newsprint and packaging paper (Commodity Code #091301) was used.

17. Apparel: The percentage change in the price of apparel as measured by the PPI (Commodity Code #381) was applied to this component. This is a revision from the 1987-based indexes in which the PPI for textile house furnishings (Commodity Code #0382) was used.

18. Minor Machinery and Equipment: The percentage change in the price of machinery and equipment as measured by the PPI (Commodity Code #11) was applied to this component. The same price measure was used in the 1987-based market baskets.

19. Miscellaneous Products: The percentage change in the price of all finished goods as measured by the PPI was applied to this component. The same price measure was used in the 1987-based market baskets.

20. Business Services: The ECI for compensation for workers in the business services industry was applied to this component. This is a revision from the 1987-based indexes in which the percentage change in the AHE for wages and salaries for production and nonsupervisory workers in the business services industry as measured by the Bureau of Labor Statistics (SIC Code 73) was used.

21. Computer and Data Processing Services: The percentage change in the AHE of production and nonsupervisory workers engaged in firms furnishing computer data processing services (SIC Code 737) was applied to this component. The same price measure was used in the 1987-based market baskets.

22. Transportation and Shipping: The percentage change in the transportation component of the CPI for all urban consumers was applied to this component. The same price measure was used in the 1987-based market baskets.

23. Telephone: The percentage change in the price of telephone services as measured by the CPI for all urban consumers was applied to this component. The same price measure was used in the 1987-based market baskets.

24. Postage: The percentage change in the price of postage as measured by the CPI for all urban consumers was applied to this component. The same price measure was used in the 1987-based market baskets.

25. All Other Services, Labor Intensive: The percentage change in the ECI for compensation paid to service workers employed in private industry was applied to this component. This is a revision from the 1987-based indexes in which the ECI for wages and salaries paid to service workers employed in private industry was used.

26. All Other Services, Nonlabor Intensive: The percentage change in the all-items component of the CPI for all urban consumers was applied to this component. The same price measure was used in the 1987-based market baskets.

For further discussion of the rationale for choosing specific price proxies, we refer the reader to the September 3, 1986 final rule (51 FR 31582).

II. Data Sources Used to Determine the Cost Category Weights and Vintage Weights, and Choices of Price Proxy Variables for the Hospital Capital Input Price Index

In the preamble to this proposed rule, we discuss the rebasing of the capital input price index (CIPI). This appendix describes certain technical features of the 1992-based index that we are proposing in this rule, as well as differences between the proposed 1992-based CIPI and the current 1987-based CIPI. We discussed the 1987-based CIPI in the September 1, 1995 final rule (60 FR 45817.)

This discussion has the following three parts:

- A synopsis of the differences between the 1987-based CIPI and the proposed 1992-based CIPI.
- A description of the methodology used to develop the cost category weights and vintage weights in the 1992-based CIPI, making note of the differences from the methodology used to develop the 1987-based CIPI.
- A description of the data sources used to measure price change for each component of the 1992-based CIPI, making note of the differences from the price proxies used in the 1987-based CIPI.

A. Synopsis of Changes Adopted in the Rebased 1992 CIPI

We made no structural changes in the 1992-based CIPI. The only major change is the use of more recent hospital capital expenditure data in the proposed 1992-based CIPI.

The 1987-based CIPI contained cost category weights that were derived from 1987 Medicare cost report data and the 1987 Annual Survey of the AHA. The 1992-based CIPI uses data from the hospital Medicare cost reports for cost periods beginning between October 1, 1991 and September 30, 1992. The 1992-based CIPI also uses data from the 1992 Annual Survey of the AHA.

The 1987-based CIPI contained vintage weights that were derived from 1987 Medicare cost report data, the 1963-1987 Panel Survey of the AHA, and the 1980–1989 Securities Data Corporation data on hospital bonds. The 1992-based CIPI uses data from the 1992 Medicare cost reports, the 1963–1992 Panel Survey of the AHA, and 1980–1992 Securities Data Corporation data on hospital bonds.

B. Methodology for Developing Cost Category Weights and Vintage Weights for the 1992-based CIPI

There are five cost categories in the CIPI: building and fixed equipment depreciation, movable equipment depreciation, capital-related interest expense from government/nonprofit debt instruments, capital-related interest expense from for-profit debt instruments, and other capital-related expenses, such as taxes and insurance. The methodology for developing each of these cost category weights is described below:

1. Building and Fixed Equipment Depreciation: The 1992-based cost weight for building and fixed equipment depreciation was derived using the 1992 Medicare cost reports. The proportion of lease expenses attributable to building and fixed equipment was included in the cost weight based on the proportion of overall capital expenses allocated to building and fixed equipment depreciation. The 1987-based weight was developed from the 1987 Medicare cost reports and the 1987 AHA Annual Survey.

2. Movable Equipment Depreciation: The 1992-based cost weight for movable equipment depreciation was derived using the 1992 Medicare Cost Reports. The proportion of lease expenses attributable to movable equipment was included in the cost weight based on the proportion of overall capital expenses allocated to movable equipment depreciation. The 1987-based weight was developed from the 1987 Medicare cost reports and the 1987 AHA Annual Survey.

3. Government/Nonprofit Interest: The 1992-based cost weight for government/nonprofit interest was derived using the 1992 AHA Annual Survey data. The government/nonprofit interest is 85 percent of total interest, reflecting the relative debts of the government/nonprofit hospital sector and the for-profit hospital sector. The proportion of lease expenses attributable to government/nonprofit interest was included in the cost weight based on the proportion of overall capital expenses allocated to government/non-profit interest expense. The 1987-based weight was developed from the 1987 AHA Annual Survey.

4. For-Profit Interest: The 1992-based cost weight of for-profit interest was

derived using the 1992 AHA Annual Survey data. The for-profit interest is 15 percent of total interest, reflecting the relative debts of the government/nonprofit hospital sector and the for-profit hospital sector. The proportion of lease expenses attributable to for-profit interest was included in the cost weight based on the proportion of overall capital expenses allocated to for-profit interest expense. The 1987-based weight was developed from the 1987 AHA Annual Survey.

5. Other Capital-Related Expenses: The 1992-based cost weight for other capital-related expenses was derived using 1992 Medicare cost reports. The proportion of lease expenses attributable to other capital-related expenses was included in the cost weight based on the proportion of overall capital expenses allocated to other capital-related expenses. The 1987-based weight was developed from the 1987 Medicare cost reports and the 1987 Capital Expenditure Survey.

There are three sets of vintage weights in the CIPI: building and fixed equipment depreciation, movable equipment depreciation, and interest expense. The methodology for developing each of these vintage weights is described below.

1. Building and Fixed Equipment: The 1992-based building and fixed equipment vintage weights were derived from the 1992 Medicare cost reports and the 1963–1992 AHA Panel Survey. The 1987-based weights were developed from the 1987 Medicare cost reports and the 1963–1987 AHA Panel Survey.

2. Movable Equipment: The 1992-based movable equipment vintage weights were derived from the 1992 Medicare cost reports and the 1963–1992 AHA Panel Survey. The 1987-based weights were developed from the 1987 Medicare cost reports and the 1963–1987 AHA Panel Survey.

3. Capital-Related Interest: The 1992-based movable equipment vintage weights were derived from the 1980–1992 Securities Data Corporation data on hospital bonds and the 1963–1992 AHA Panel Survey. The 1987-based weights were developed from the 1980–1989 Securities Data Corporation data on hospital bonds and the 1963–1987 AHA Panel Survey.

C. Price Proxies Used to Measure Cost Category Growth in the CIPI

1. Building and Fixed Equipment Depreciation: The percentage change in the vintage-weighted price of building and fixed equipment depreciation as measured by the Boeckh institutional construction index was applied to this category in the 1992-based CIPI. The same price proxy was used in the 1987-based CIPI.

2. Movable Equipment Depreciation: The percentage change in the vintage-weighted price of movable equipment depreciation as measured by the Producer Price Index (PPI) for machinery and equipment was applied to this category in the 1992-based CIPI. The same price proxy was used in the 1987-based CIPI.

3. Government/Nonprofit Interest Expense: The percentage change in the vintage-weighted price of government/nonprofit interest expense as measured by the Average yield on Domestic Municipal Bonds from the Bond Buyer index of 20 bonds was applied to this category in the 1992-based CIPI. The same price proxy was used in the 1987-based CIPI.

4. For-Profit Interest Expense: The percentage change in the vintage-weighted price of for-profit interest expense as measured by the Average yield on Moody's AAA Bonds was applied to this category in the 1992-based CIPI. The same price proxy was used in the 1987-based CIPI.

5. Other Capital-Related Expenses: The percentage change in the price of other capital-related expenses as measured by the CPI for all urban consumers for residential rent was applied to this category in the 1992-based CIPI. The same price proxy was used in the 1987-based CIPI.

We provided more detailed discussion of the rationale for the choice of these price proxies in the June 2, 1995 proposed rule (60 FR 29227) and in the September 1, 1995 final rule (60 FR 45815).

The Honorable Albert Gore, Jr.
President of the Senate
Washington, D.C. 20510

Dear Mr. President: Section 1886(e)(3)(B) of the Social Security Act (the Act) requires me to report to Congress the initial estimate of the applicable percentage increase in inpatient hospital payment rates for Federal Fiscal Year (FY) 1997 that I will recommend for hospitals subject to the Medicare prospective payment system (PPS) and for hospitals and units excluded from PPS. This submission constitutes the required report.

Current law mandates an update for all PPS hospitals of the market basket rate of increase minus 0.5 percentage points. The President's FY 1997 budget includes an update for PPS hospitals in both large urban areas and other areas equal to the market basket rate of increase minus 1.5 percentage points. The President's FY 1997 budget estimated the PPS market basket rate of increase for FY 1997 to be 3.6 percent. Based on this estimate, we recommend an update for hospitals in both large urban and other areas of 2.1 percent. However, recent data from ProPAC and other sources suggest that the final PPS market basket rate of increase for FY 1997 will be lower.

Sole community hospitals (SCHs) are the sole source of care in their area and are afforded special payment protection to maintain access to services for Medicare beneficiaries. SCHs are paid the higher of a hospital-specific rate or the Federal PPS rate. Current law mandates an update for sole community hospitals of the market basket rate of increase minus 0.5 percentage points. Consistent with the President's FY 1997 budget, we recommend an update to hospital-specific rates equal to the increase for all PPS hospitals; that is, the market basket rate of increase of 3.6 percent minus 1.5 percentage points, or 2.1 percent.

Hospitals and distinct part hospital units excluded from PPS are paid based on their reasonable costs subject to a limit under the Tax Equity and Fiscal Responsibility Act (TEFRA) of 1982. Current law mandates an update for all hospitals and distinct part hospital units excluded from PPS equal to the rate of increase in the excluded hospital market basket minus 1.0 percentage point, although the update can be higher for certain hospitals and units with costs that are greater than their target amounts. The President's FY 1997 budget incorporates an increase in the TEFRA limit equal to the rate of increase in the excluded hospital market basket (3.6 percent) minus 1.5 percentage points. Therefore, we recommend an increase in the TEFRA limit of 2.1 percent.

My recommendation for the updates is based on cost projections used in the President's FY 1997 budget. A final recommendation on the appropriate percentage increases for FY 1997 will be made nearer the beginning of the new Federal Fiscal Year based on the most current market basket projection available at that time. The final recommendation will incorporate our analysis of the latest estimates of all relevant factors, including recommendations by the Prospective Payment Assessment Commission (ProPAC). We currently expect that the final estimate of the market basket rate of increase will be lower than the estimate used in the President's FY 1997 budget.

Section 1886(d)(4)(C)(iv) of the Act also requires that I include in my report recommendations with respect to adjustments to the diagnosis-related group (DRG) weighting factors. At this time I do not anticipate recommending any adjustment to the DRG weighting factors for FY 1997.

I am pleased to provide this recommendation to you. I am also sending a copy of this letter to the Speaker of the House of Representatives.

Sincerely,

Donna E. Shalala

The Honorable Newt Gingrich
Speaker of the House of Representatives
Washington, D.C. 20515

Dear Mr. Speaker: Section 1886(e)(3)(B) of the Social Security Act (the Act) requires me to report to Congress the initial estimate of the applicable percentage increase in inpatient hospital payment rates for Federal Fiscal Year (FY) 1997 that I will recommend for hospitals subject to the Medicare prospective payment system (PPS) and for hospitals and units excluded from PPS. This submission constitutes the required report.

Current law mandates an update for all PPS hospitals of the market basket rate of increase minus 0.5 percentage points. The President's FY 1997 budget includes an update for PPS hospitals in both large urban areas and other areas equal to the market basket rate of increase minus 1.5 percentage points. The President's FY 1997 budget estimated the PPS market basket rate of increase for FY 1997 to be 3.6 percent. Based on this estimate, we recommend an update for hospitals in both large urban and other areas of 2.1 percent. However, recent data from ProPAC and other sources suggest that the final PPS market basket rate of increase for FY 1997 will be lower.

Sole community hospitals (SCHs) are the sole source of care in their area and are afforded special payment protection to maintain access to services for Medicare beneficiaries. SCHs are paid the higher of a hospital-specific rate or the Federal PPS rate. Current law mandates an update for sole community hospitals of the market basket rate of increase minus 0.5 percentage points. Consistent with the President's FY 1997 budget, we recommend an update to hospital-specific rates equal to the increase for all PPS hospitals; that is, the market basket rate of increase of 3.6 percent minus 1.5 percentage points, or 2.1 percent.

Hospitals and distinct part hospital units excluded from PPS are paid based on their reasonable costs subject to a limit under the Tax Equity and Fiscal Responsibility Act (TEFRA) of 1982. Current law mandates an update for all hospitals and distinct part hospital units excluded from PPS equal to the rate of increase in the excluded hospital market basket minus 1.0 percentage point, although the update can be higher for certain hospitals and units with costs that are greater than their target amounts. The President's FY 1997 budget incorporates an increase in the TEFRA limit equal to the rate of increase in the excluded hospital market basket (3.6 percent) minus 1.5 percentage points. Therefore, we recommend an increase in the TEFRA limit of 2.1 percent.

My recommendation for the updates is based on cost projections used in the President's FY 1997 budget. A final recommendation on the appropriate percentage increases for FY 1997 will be made nearer the beginning of the new Federal Fiscal Year based on the most current market basket projection available at that time. The final recommendation will incorporate our analysis of the latest estimates of all relevant factors, including recommendations by the Prospective Payment Assessment Commission (ProPAC). We currently expect that the final estimate of the market basket rate of increase will be lower than the estimate used in the President's FY 1997 budget.

Section 1886(d)(4)(C)(iv) of the Act also requires that I include in my report recommendations with respect to adjustments to the diagnosis-related group (DRG) weighting factors. At this time I do not anticipate recommending any adjustment to the DRG weighting factors for FY 1997.

I am pleased to provide this recommendation to you. I am also sending a copy of this letter to the President of the Senate.

Sincerely,

Donna E. Shalala

Appendix E: Recommendation of Update Factors for Operating Cost Rates of Payment for Inpatient Hospital Services

I. Background

Several provisions of the Social Security Act (the Act) address the setting of update factors for inpatient services furnished in FY 1997 by hospitals subject to the prospective payment system and those excluded from the prospective payment system. Section 1886(b)(3)(B)(i)(XII) of the Act sets the FY 1997 percentage increase in the operating cost standardized amounts equal to the rate of increase in the hospital market basket minus 0.5 percentage points for prospective payment hospitals in all areas. Section 1886(b)(3)(B)(iv) of the Act sets the FY 1997 percentage increase in the hospital-specific rates applicable to sole community hospitals equal to the rate set forth in section 1886(b)(3)(B)(i) of the Act, that is, the same update factor as all other hospitals subject to the prospective payment system, or the rate of increase in the market basket minus 0.5 percentage points. Section 1886(b)(3)(B)(ii) of the Act sets the FY 1997 percentage increase in the rate of increase limits for hospitals excluded from the prospective payment system equal to the rate of increase in the excluded hospital market basket minus the applicable reduction or, in the case of a hospital in a fiscal year for which the hospital's update adjustment percentage is at least 10 percent, the excluded hospital market basket percentage increase. Under section 1886(b)(3)(B)(v) of the Act, a hospital's update adjustment percentage increase for FY 1997 is the percentage increase by which the hospital's allowable operating costs of inpatient hospital services recognized under this title for the cost reporting period beginning in FY 1990 exceed the hospital's target amount for such cost reporting period, increased for each fiscal year (beginning with FY 1994) by the sum of any of the hospital's applicable reductions for previous years. The applicable reduction with respect to a hospital for FY 1997 is the lesser of 1 percentage point or the percentage point difference between 10 percent and the hospital's update adjustment percentage for FY 1997.

In accordance with section 1886(d)(3)(A) of the Act, we are proposing to update the standardized amounts, the hospital-specific rates, and the rate-of-increase limits for hospitals excluded for the prospective payment system as provided in section 1886(b)(3)(B) of the Act. Based on the first quarter 1996 forecast of the FY 1997 rebased market basket increase of 2.7 percent for hospitals subject to the prospective payment system, the proposed updates in the standardized amounts are 2.2 percent for hospitals in both large urban and other areas. The proposed update in the hospital-specific rate applicable to sole community hospitals is 2.2 percent (that is, the market basket rate of increase of 2.7 percent minus 0.5 percentage points). The proposed update for hospitals excluded from the prospective payment system is based on the percentage increase in the excluded hospital market basket (currently estimated at 2.7 percent) minus the applicable reduction factor. The applicable reduction factor is the lesser of 1 percentage point or the percentage point difference between 10 percent and the hospital's update adjustment percentage. Therefore, for excluded hospitals, the hospital-specific proposed update can vary between 1.7 and 2.7 percent.

Sections 1886(e)(2)(A) and (3)(A) of the Act require that the Prospective Payment Assessment Commission (ProPAC) recommend to the Congress by March 1, 1996 an update factor that takes into account changes in the market basket rate of increase index, hospital productivity, technological and scientific advances, the quality of health care provided in hospitals, and long-term cost effectiveness in the provision of inpatient hospital services.

In its March 1, 1996 report, ProPAC recommended update factors to the standardized amounts equal to the percentage increase in the market basket minus 0.7 to 2.0 percentage points for hospitals in both large urban and other areas (Recommendation 10). Based on its market basket rate of increase estimate of 2.7 percent, ProPAC's recommended update to the standardized amounts equals 2.0 to 0.7 percent for hospitals in both large urban and other areas. (ProPAC's market basket is still using the 1987-based weights.) ProPAC did not make a separate recommendation for the hospital-specific rates applicable to sole community hospitals. The components of ProPAC's update factor recommendations are described in detail in the ProPAC report, which is published as Appendix F to this document. We discuss ProPAC's recommendations concerning the update factors and our responses to these recommendations below.

Section 1886(e)(4) of the Act requires that the Secretary, taking into

consideration the recommendations of ProPAC, recommend update factors for each fiscal year that take into account the amounts necessary for the efficient and effective delivery of medically appropriate and necessary care of high quality. Under section 1886(e)(5) of the Act, we are required to publish the update factors recommended under section 1886(e)(4) of the Act. Accordingly, this appendix provides the recommendations of appropriate update factors, the analysis underlying our recommendations, and our responses to the ProPAC recommendations concerning the update factors.

II. Secretary's Recommendations

Under section 1886(e)(4) of the Act, we are recommending that the standardized amounts be increased by an amount equal to the market basket rate of increase minus 1.5 percentage points for hospitals located in large urban and other areas. We are also recommending an update of the market basket rate of increase minus 1.5 percentage points to the hospital-specific rate for sole community hospitals. These figures are consistent with the President's FY 1997 budget recommendation, which continues the reductions imposed by section 13501 of the Omnibus Budget Reconciliation Act of 1993 (Public Law 103–66), that is, reductions in the hospital market basket of 2.5 percentage points for FYs 1994 and 1995 and 2.0 percentage points for FY 1996. We believe these recommended changes in the update factor would ensure that Medicare acts as a prudent purchaser and provide incentives to hospitals for increased efficiency, thereby contributing to the solvency of the Medicare Part A Trust Fund. When the President's budget was submitted, the market basket rate of increase was projected at 3.6 percent. As noted above, this proposed recommendation is based on the most recent forecast of the proposed rebased market basket. (See section IV of the preamble to this proposed rule for a detailed discussion of the market basket.)

We recommend that hospitals excluded from the prospective payment system receive an update equal to the percentage increase in the proposed rebased market basket that measures input price increases for services furnished by excluded hospitals minus 1.5 percentage points. That market basket rate of increase is currently forecast at 2.7 percent. Subtracting 1.5 percentage points would result in an update for hospitals excluded from the prospective payment system of 1.2 percent. This recommendation is consistent with the President's budget, acknowledging that the market basket rate of increase for these hospitals also was forecast at 3.6 percent at the time the budget was submitted.

As required by section 1886(e)(4) of the Act, we have taken into consideration the recommendations of ProPAC in setting these recommended update factors. Our responses to the ProPAC recommendations concerning the update factors are discussed below.

III. ProPAC Recommendation for Updating the Prospective Payment System Standardized Amounts

For FY 1997, ProPAC's update framework would support an update between 0.7 percentage points and 2.0 percentage points less than the increase in the hospital market basket index. The methodology employed by the Commission in previous years would lead to a recommendation of about market basket minus 1.5 percentage points, roughly corresponding to the midpoint of that range. In light of the significant changes occurring in health care delivery, the Commission believes that the increase in the prospective payment system rates could be held to market basket minus 2.0 percentage points for the next year or two. However, it is concerned about the potential effects of continuing updates at that level on hospitals' financial health. Low updates over an extended period of time could affect a hospital's ability to provide quality care to Medicare beneficiaries, compromise access, and impede the diffusion of quality-enhancing technological advances.

Based on the market basket estimate of 2.7 percent, ProPAC recommends that hospitals in large urban and other areas receive an update between 0.7 to 2.0 percent.

Response: We are recommending an update that is consistent with the Administration's budget proposal. Our recommendation is that the update for FY 1997 for prospective payment system hospitals located in large urban and other areas be equal to the market basket rate of increase forecast minus 1.5 percentage points. Based on HCFA's current forecast of the market basket rate of increase (2.7 percent), we recommend an update for FY 1997 for large urban and other hospitals equal to 1.2 percent. Our recommendation is supported by the following analyses that measure changes in hospital productivity, scientific and technological advances, practice pattern changes, and changes in case mix:

- *Productivity:* Service level productivity is defined as the ratio of total service output to full-time equivalent employees (FTEs). While we recognize that productivity is a function of many variables (for example, labor, nonlabor material, and capital inputs), we use a labor productivity measure since this update framework applies to operating payment. To recognize that we are apportioning the short run output changes to the labor input and not considering the nonlabor inputs, we weight our productivity measure for operating costs by the share of direct labor services in the market basket rate of increase to determine the expected effect on cost per case.

Our recommendation for the service productivity component is based on historical trends in productivity and total output for both the hospital industry and the general economy, and projected levels of future hospital service output. ProPAC has also estimated cumulative service productivity growth to be 4.9 percent from 1985–1989, or 1.2 percent annually. At the same time, the Commission estimates total output growth at 3.4 percent annually, implying a ratio of service productivity growth to output growth of 0.35. Our Medicare Provider Analysis and Review (MedPAR) file analysis indicates total Medicare service output (charges per admission, adjusted for CPI change) increased 10.7 percent from 1987–1995, or an approximate average annual increase of 1.2 percent. Since it is not possible at this time to develop a productivity measure specific to Medicare patients, we examined productivity (output per hour) and output (gross domestic product) for the economy. Depending on the exact time period, annual changes in productivity range from 0.3 to 0.35 percent of the change in output (that is, a 1.0 percent increase in output would be correlated with an 0.3 to 0.35 percent change in output per hour).

Under our framework, the recommended update is based in part on expected productivity—that is, projected service output during the year multiplied by the historical ratio of service productivity to total service output, multiplied by the share of labor in total operating inputs, as calculated in the hospital market basket rate of increase. This method estimates an expected labor productivity improvement in the same proportion to expected total service growth that has occurred in the past and assumes that, at a minimum, growth in FTEs changes proportionally to the growth in total service output. Thus, the recommendation allows for unit productivity to be smaller than the

historical averages in years that output growth is relatively low and higher in years that output growth is larger than the historical trend. Based on the above estimates from both the hospital industry and the economy, we have chosen to employ the range of ratios of productivity change to output change of 0.30 to 0.35.

The expected change in total hospital service output is the product of projected growth in total admissions (adjusted for outpatient usage), projected real case-mix growth, and expected quality enhancing intensity growth, net of expected decline in intensity due to reduction of cost ineffective practice. Case-mix growth and intensity numbers for Medicare are used as proxies for those of the total hospital, since case-mix increases (used in the intensity measure as well) are unavailable for non-Medicare patients. Thus, expected output growth is simply the sum of the expected change in intensity (0.0 percent), projected admissions change (2.7 percent for FY 1997), and projected real case-mix growth (1.6 percent), or 4.3 percent. The share of direct labor services in the market basket rate of increase (consisting of wages, salaries, and employee benefits) is 61.4 percent. Multiplying the expected change in total hospital service output (4.3 percent) by the ratio of historical service productivity change to total service growth of 0.30 to 0.35 and by the direct labor share percentage (0.614) provides our productivity standard of 0.8 to 0.9 percent.

ProPAC also believes hospitals should be given an incentive for additional productivity improvement. ProPAC measures productivity as the ratio of hospital admissions (adjusted for case mix and outpatient services) per FTE employee (adjusted for changes in skill mix). ProPAC includes in its productivity measurement the effect of changes in practice patterns. We treat practice pattern changes as a portion of our intensity adjustment, described below. ProPAC's latest estimate indicate that hospital productivity increased as much as 2.3 percent in 1994. Given this improvement, ProPAC believes a productivity adjustment in the range of –0.7 to –1.2 percentage points would be reasonable in fiscal year 1997. The adjustment is intended to share productivity equally between hospitals and Medicare. In the near future, ProPAC believes there may be even greater productivity improvements, as hospitals strive to stay competitive and financially viable.

• *Intensity:* We base our intensity standard on the combined effect of three separate factors: changes in the use of quality enhancing services, changes in the use of services due to shifts in within-DRG severity, and changes in the use of services due to reductions of cost-ineffective practices. For FY 1997, we recommend an adjustment of 0.0 percent. The basis of this recommendation is discussed below.

We have no empirical evidence that accurately gauges the level of quality-enhancing technology changes. Typically, a specific new technology increases cost in some uses and decreases cost in other uses. Concurrently, health status is improved in some situations while in other situations it may be unaffected or even worsened using the same technology. It is difficult to separate out the relative significance of each of the cost increasing effects for individual technologies and new technologies.

The quality enhancing technology component is intended to recognize the use of services that increase cost but whose value in terms of enhanced health-status is commensurate with these costs. Such services may result from technological change, or in some cases, increased use of existing technologies. The latter recognizes that as cost and medical effectiveness studies become available, some increased use of existing, as well as new, services may be warranted.

The component for reduction of cost-ineffective practice recognizes that some improvements in practice patterns could be made so that the intensity of services provided is more consistent with the efficient use of limited resources. That is, improvements could be made so that the number of services provided during an inpatient stay, and their complexity, produce an improvement in health status that is consistent with the cost of care. This component of our update recommendation is intended to encourage both hospitals and physicians to more carefully consider the cost-effectiveness of medical care. This component of the framework also accounts for real within-DRG change, since that should be directly reflected in the CMI-adjusted growth in real charges per case.

Following methods developed by HCFA's Office of the Actuary for deriving hospital output estimates from total hospital charges, we have developed Medicare-specific intensity measures based on a 5-year average using FY 1991–1995 MedPAR billing data. Case-mix constant intensity is calculated as the change in total Medicare charges per discharge adjusted for changes in the average charge per unit of service as measured by the Medical CPI hospital component and changes in real case mix. Thus, in order to measure changes in intensity, one must measure changes in real case mix.

For FY 1991 and FY 1992, we estimate that 1.0 to 1.4 percent of observed case-mix increase was real. This estimate is supported by past studies of case-mix change by the RAND Corporation. The most recent study was ≥Has DRG Creep Crept Up? Decomposing the Case Mix Index Change Between 1987 and 1988≥ by G.M. Carter, J.P. Newhouse, and D.A. Relles, R–4098–HCFA/ProPAC (1991). The study suggests that real case-mix change was not dependent on total change, but was rather a fairly steady 1.0 to 1.5 percent per year. In the past we have used 1.4 percent as the upper bound because the RAND study did not take into account that hospitals may have induced doctors to document medical records more completely in order to improve payment. For FY 1993 and FY 1994, we assumed that all of the observed case-mix increases of 0.9 and 0.8 percent, respectively, were real. For FY 1995, we assumed that all of the observed case-mix increase of 1.6 percent was real. We note that this assumed increase in real case mix is higher than our previously assumed upper bound of 1.4 percent. Based on its analysis of the FY 1995 MedPAR data, the Office of the Actuary has concluded that the apparent shifting of some cases to the outpatient setting and activity in the cardiovascular DRGs has contributed to a higher than expected increase in real case mix.

Given estimates of real case-mix increase of 1.0 percent for FY 1991–1992, 0.9 percent for FY 1993, 0.8 percent for FY 1994, and 1.6 percent for FY 1995, we estimate case-mix constant intensity declined by an average 1.1 percent during FY 1991 through 1995, for a cumulative decrease of 5.6 percent. If we assume that real case-mix increase was 1.4 percent for FYs 1991 and 1992, 0.9 percent for FY 1993, 0.8 percent for FY 1994, and 1.6 percent for FY 1995, we estimate case-mix constant intensity declined by an average of 1.2 percent during FY 1991 through 1994, for a cumulative decrease of 5.9 percent. Since we estimate that intensity has declined during FY 1991–1995 period, we are recommending a 0.0 percent intensity adjustment for FY 1997.

• *Quality Enhancing New Science and Technology:* For FY 1997, ProPAC has computed the adjustment for scientific and technological advances to be a future-oriented policy target intended to provide additional funds for hospitals to adopt quality-enhancing, cost increasing health care innovations.

While in the past the Commission has included an adjustment ranging from 0.3 to 1.0 percentage points, the current range is lower because there is little evidence of significant new cost-increasing advances ready for implementation. Moreover, the cost-competitive environment now faced by hospitals may dampen the adoption of new technologies as they closely evaluate their relative costs and benefits. Therefore, the Commission recommends an adjustment of 0.1 to 0.6 percentage points for the increase in operating costs due to scientific and technological advances.

• *Change in Case Mix:* Our analysis takes into account projected changes in case mix, adjusted for changes attributable to improved coding practices. For our FY 1997 update recommendation, we are projecting a 1.6 percent increase in the case-mix index. We define real case-mix increase as actual changes in the mix (and resource requirements) of Medicare patients as opposed to changes in coding behavior that result in assignment of cases to higher-weighted DRGs but do not reflect greater resource requirements. For FY 1997, we believe that real case-mix increase is equal to our projected change in case mix. We do not see any changes in coding behavior in our projected case-mix change. Our net adjustment to case-mix change for FY 1997 is 0.0 percentage points.

The −1.0 to −0.9 percent figure used in the ProPAC framework represents ProPAC's projection for observed case-mix change. ProPAC projects a 0.8 to 0.9 percentage points increase in real case-mix change across DRG's and a 0.0 to 0.2 percentage points increase in within-DRG case-complexity change. ProPAC's net adjustment for case mix is −0.2 to 0.0 percentage points.

• *Effect of FY 1995 DRG Reclassification and Recalibration:* We estimate that DRG reclassification and recalibration for FY 1995 resulted in a 0.0 percent increase in the case-mix index when compared with the case-mix index that would have resulted if we had not made the reclassification and recalibration changes to the GROUPER. ProPAC does not make an adjustment for DRG reclassification and recalibration in its update recommendation.

• *Correction for Market Basket Forecast Error:* The estimated market basket percentage increase used to update the FY 1995 payment rates was 3.6 percent. Our most recent data indicate the actual FY 1995 increase was 3.0 percent, reflecting that the actual increase in wages was lower than projected. The resulting forecast error in the FY 1995 market basket rate of increase is 0.6 percentage points. Under our update framework, we make a forecast error correction if our estimate is off by 0.25 percentage points or more. Therefore, we are recommending an adjustment of −0.6 percentage points to reflect this overestimation of the FY 1995 market basket rate of increase. The following is a summary of the update ranges supported by our analyses compared to ProPAC's framework.

TABLE 1.—COMPARISON OF FY 1997 UPDATE RECOMMENDATIONS

	HHS	ProPAC
Market Basket	MB	MB
Difference Between HCFA & ProPAC Market Baskets	.....	–0.1 to 0.0
Subtotal	MB	MB to MB–0.1
Policy Adjustment Factors		
Productivity	–0.9 to –0.8	–1.2 to –0.7
Intensity:	0.0	.....
Science and Technology	.....	0.1 to 0.6
Practice Patterns	.....	(1)
Real Within DRG Change	.....	(2)
Subtotal	–0.9 to –0.8	–1.1 to –0.1
Case-Mix Adjustment Factors		
Projected Case-Mix Change	–1.6	–1.0 to –0.9
Real Across DRG Change	1.6	0.8 to 0.9
Real Within DRG Change	(3)	0.0 to 0.2
Subtotal	0.0	–0.2 to 0.0
Effect of 1995 Reclassification and Recalibration	0.0	.....
Forecast Error Correction	–0.6	–0.6
Total Recommended Update	MB–1.5 to MB–1.4	MB–2.0 to MB–0.7

[1] Included in ProPAC's Productivity Measure.
[2] Included in ProPAC's Case-Mix Adjustment.
[3] Included in HHS' Intensity Factor.

The above analysis would support a recommendation that the update be between market basket minus 1.4 and market basket minus 1.5 percentage points. We are recommending an update of market basket minus 1.5 percentage points, consistent with President Clinton's FY 1997 budget proposal. We also recommend that the hospital-specific rates applicable to sole community hospitals be increased by the same update, market basket minus 1.5 percentage points.

V. ProPAC Recommendation for Updating the Rate-of-Increase Limits for Excluded Hospitals

ProPAC recommends an update factor equal to the market basket rate of increase minus 0.6 percentage points for excluded hospitals and units (Recommendation 12). The 0.6 percentage points reduction represents a

reduction of 0.6 percentage points to account for the forecast error in the FY 1995 market basket rate of increase for excluded units, no increase to reflect the different compensation price proxies used by ProPAC, and no allowance for new technology. ProPAC believes that major changes in the excluded hospitals' target amounts should not be made at this time. Rather, a prospective payment system for excluded hospitals and units should be implemented as soon as possible.

Response: We recommend that hospitals excluded from the prospective payment system receive an update equal to the percentage increase in the market basket that measures input price increases for services furnished by excluded hospitals minus 1.5 percentage points. The reduction is consistent with the updates provided under President Clinton's budget proposal. The market basket rate of increase for excluded hospitals is currently forecast at 2.7 percent. Subtracting 1.5 percentage points would result in an update of 1.2 percent for excluded hospitals and units.

As noted by ProPAC, HCFA has contracted with the RAND Corporation to analyze a classification system for rehabilitation patients that appears to have the potential to serve as the basis for a prospective payment system for rehabilitation hospitals and units. However, even if this classification system is found to be suitable, it would be several years before we could fully implement any prospective payment system for these facilities. In addition, we have been less successful in our pursuit of a suitable classification system for the other types of excluded hospitals. Therefore, as an interim measure, the President's budget contains a proposal to rebase the target amounts for excluded hospitals and units on more recent cost data. Changes would also be made to the conditions under which facilities would receive additional payment when they exceed their limits. Incentive payments for facilities whose costs are below their target amounts would be eliminated.

BILLING CODE 4120–01–P

PROSPECTIVE PAYMENT
ASSESSMENT COMMISSION

REPORT AND RECOMMENDATIONS TO THE CONGRESS

MARCH 1, 1996

PROSPECTIVE PAYMENT ASSESSMENT COMMISSION

Stuart H. Altman, Ph.D., *Chairman*

Susan S. Bailis
James D. Bernstein
Clay D. Edmands
Spencer Johnson
Clark E. Kerr
James R. Kimmey, M.D.
Judith R. Lave, Ph.D.
Hugh W. Long, Ph.D., J.D.
Robert J. Myers
Donald R. Oder
Glenda Rosenbloom
J. Michael Sadaj, M.D.
Gerald M. Shea
Roxane B. Spitzer, Ph.D.
James R. Tallon
Jae L. Wittlich

Staff and Consultants

Donald A. Young, M.D., *Executive Director*
Laura A. Dummit, *Deputy Executive Director*
Stuart Guterman, *Deputy Executive Director*

John L. Ashby
Thomas B. Bradley
Wylene Carlyle
Delores J. Curtis
Karen S. Fisher, J.D.
Barbara J. Gage, Ph.D.
Timothy F. Greene
Dana K. Kelley
Lynn L. Lewis
Craig K. Lisk
Ann-Marie Lynch
Mary Anne Miles
Julian H. Pettengill
Molly Ryan
Claire E. Sharda
Sarah S. Thomas

The Prospective Payment Assessment Commission, created in 1983 by the legislation that established the Medicare prospective payment system for inpatient hospital services, advises the Congress and the Secretary of Health and Human Services on policies affecting Medicare payments to hospitals and other facilities. The Commission also studies industrywide effects of Medicare policies and important trends in the health care delivery system. On March 1 of each year, the Commission submits a report to the Congress with recommendations for improvements in Medicare policies and related subjects.

Prospective Payment Assessment Commission

300 7th Street, S.W.
Suite 301B
Washington, D.C.
20024
Tel (202) 401-8986
Fax (202) 401-8739

March 1, 1996

The Honorable Albert Gore, Jr.
President of the Senate
United States Senate
Washington, D.C. 20510

Dear Mr. President:

I am hereby transmitting to the Congress the annual report of the Prospective Payment Assessment Commission as required by Section 1886(e)(3) of the Social Security Act as amended by Public Law 101-508. This report presents a discussion of health care spending and its impact on the Medicare program, as well as major reforms proposed for Medicare. In addition, 26 recommendations concerning Medicare payment policies are included. The report reflects the Commission's judgment about issues of substantial importance to the Medicare program and beneficiaries, hospitals, and other providers.

Sincerely,

Stuart H. Altman, Ph.D.
Chairman

Enclosure

Prospective Payment Assessment Commission

300 7th Street, S.W.
Suite 301B
Washington, D.C.
20024
Tel (202) 401-8986
Fax (202) 401-8739

March 1, 1996

The Honorable Newt Gingrich
Speaker of the House
United States House of Representatives
Washington, D.C. 20515

Dear Mr. Speaker:

I am hereby transmitting to the Congress the annual report of the Prospective Payment Assessment Commission as required by Section 1886(e)(3) of the Social Security Act as amended by Public Law 101-508. This report presents a discussion of health care spending and its impact on the Medicare program, as well as major reforms proposed for Medicare. In addition, 26 recommendations concerning Medicare payment policies are included. The report reflects the Commission's judgment about issues of substantial importance to the Medicare program and beneficiaries, hospitals, and other providers.

Sincerely,

Stuart H. Altman, Ph.D.
Chairman

Enclosure

TABLE OF CONTENTS

Chapter		Page
EXECUTIVE SUMMARY		1
1.	**REFORMING THE MEDICARE PROGRAM**	9
	Health Care Spending	12
	Medicare Program Expenditures	13
	Medicaid Program Expenditures	14
	Medicare Beneficiary Cost Sharing	14
	The Solvency of the Medicare Trust Funds	15
	Medicare, Medicaid, and the Federal Budget	16
	Renewed Action by the Congress	17
	Medicare Savings	17
	Medicaid Savings	18
	The MedicarePlus Program	18
	The Traditional Fee-for-Service Program	19
	A New Philosophy	19
	The Failsafe Budget Mechanism	20
	Medicare Benefit Budget and Budget Allotment	20
	Sector Allocation	20
	Impact on Fee-for-Service Spending	21
	Changes in the Health Care Environment	21
	The Uninsured Population	22
	Conclusions and Recommendations	23
	Recommendation 1: Slowing the Rise in Medicare Spending	23
	Recommendation 2: The Failsafe Budget Mechanism	23
2.	**MEDICARE'S CAPITATION PROGRAM**	27
	The Medicare Risk Program	29
	Capitation Rates	29
	Level, Growth, and Variation	30
	Risk Adjustment	30
	Enrollment and Plan Participation	31
	Plan Accountability	32
	Proposed Changes to Medicare Capitation Arrangements	32
	The Congressional Proposal: MedicarePlus	32
	Plan Choices	33
	Fee-for-Service Option	33
	Medical Savings Accounts	33
	Benefits	34
	Payments to MedicarePlus Plans	34
	Risk Adjustment	36
	Enrollment and Disenrollment	36
	Accountability	36
	The Administration's Proposal	36
	Conclusions and Recommendations	37
	Recommendation 3: Expanding Medicare's Capitation Program	37
	Recommendation 4: Setting and Updating the Capitation Rates	37

Chapter *Page*

Recommendation 5: Improving Risk Adjustment Methods . . . 38
Recommendation 6: Medical Savings Accounts . . . 38
Recommendation 7: The MedicarePlus Fee-for-Service Option . . . 39
Recommendation 8: Information for Beneficiary Health Plan Choices . . . 39
Recommendation 9: Health Plan Accountability . . . 39

3. ACUTE CARE HOSPITAL PAYMENTS . . . 43

Payment Updates . . . 47
PPS Operating Rates . . . 47
PPS Capital Payment Rates . . . 49
Payments to PPS-Excluded Hospitals and Distinct-Part Units . . . 50
Teaching Hospitals . . . 52
Direct Graduate Medical Education Payments . . . 53
Indirect Medical Education Payments . . . 53
Other Support for Teaching-Related Costs . . . 54
Disproportionate Share Hospital Payments . . . 55
Discharges from PPS Hospitals to Other Facilities . . . 56
Conclusions and Recommendations . . . 57
Recommendation 10: Updating PPS Operating Rates . . . 57
Recommendation 11: Setting Capital Payment Rates . . . 57
Recommendation 12: Updating Payments to PPS-Excluded Hospitals and Distinct-Part Units . . . 58
Recommendation 13: Broadening Financial Support to Teaching Hospitals . . . 59
Recommendation 14: Medicare Payments for Graduate Medical Education Costs . . . 59
Recommendation 15: Medicare Indirect Medical Education Payments . . . 59
Recommendation 16: Distributing Additional Teaching-Related Payments . . . 60
Recommendation 17: Disproportionate Share Hospital Payments . . . 60
Recommendation 18: Method for Distributing Disproportionate Share Payments . . . 60
Recommendation 19: Discharges from PPS Hospitals to Other Facilities . . . 61

4. POST-ACUTE AND AMBULATORY CARE PROVIDERS . . . 63

Post-Acute Care Providers . . . 65
Rehabilitation Facilities and Long-Term Care Hospitals . . . 67
Growth in Facilities, Utilization, and Expenditures . . . 68
Proposed Payment Changes . . . 68
Skilled Nursing Facility Services . . . 69
Growth in Facilities, Utilization, and Expenditures . . . 69
Proposed Payment Changes . . . 70
The Congressional Proposal . . . 70
The Administration's Proposal . . . 71
Home Health Services . . . 72
Growth in Facilities, Utilization, and Expenditures . . . 72
Proposed Payment Changes . . . 72
The Congressional Proposal . . . 73
The Administration's Proposal . . . 74
Conclusions and Recommendations . . . 75
Recommendation 20: Prospective Payment for Post-Acute Care . . . 75
Recommendation 21: Case-Mix Measures for Post-Acute Services . . . 75

Chapter *Page*

Recommendation 22: Interim Fee-for-Service Payment Method for Skilled Nursing Facility Services . . . 76
Recommendation 23: Interim Fee-for-Service Payment Method for Home Health Care . . . 76
Ambulatory Care Providers . . . 76
Outpatient Dialysis Services . . . 77
Proposed Payment Changes . . . 78
Update Framework . . . 78
Hospital Outpatient Services . . . 80
Beneficiary Liability . . . 81
Formula-Driven Overpayment . . . 81
Proposed Payment Changes . . . 81
Conclusions and Recommendations . . . 81
Recommendation 24: Update to the Composite Rate for Dialysis Services . . . 82
Recommendation 25: Prospective Payment for Hospital Outpatient Services . . . 82
Recommendation 26: Beneficiary Liability for Hospital Outpatient Services . . . 82

APPENDIXES . . . 87

A. Technical Report Series . . . 89
B. Biographical Sketches of Commissioners . . . 105
C. Statutory Mandate of the Commission . . . 111

LIST OF TABLES

Page

Chapter 1. Reforming the Medicare Program

1-1 National Health Expenditures by Source of Funds, Selected Years 12
1-2 Personal Health Care Expenditures by Source of Funds, Selected Years (In Billions) 13
1-3 Government Health Expenditures as a Percentage of Total Government Expenditures, Selected Years 13
1-4 Personal Health Care Expenditures Under Medicare and Medicaid, Selected Years 14
1-5 Number of Years from Trustees' Projection Until Insolvency of the Hospital Insurance Trust Fund 16
1-6 Selected Congressional Budget Office Projections, Fiscal Years 1995-2002 (In Billions) 17
1-7 Medicare and Medicaid Baseline Spending and Estimates Under Alternative Proposals, 1995-2002 (In Billions) 18
1-8 Estimated Savings from the Congressional Proposal, by Category, 1996-2002 (In Billions) 19
1-9 Selected Congressional Budget Office Medicare Spending Estimates, Fiscal Years 1995-2002 20
1-10 Real Change in Medicare Spending Per Enrollee and Private Health Insurance Spending Per Insured Person, 1979-1993 (In Percent) 22

Chapter 2. Medicare's Capitation Program

2-1 Selected Demographic Group Risk Adjustment Factors to the Medicare Capitated Risk Payment, 1995 31
2-2 Medicare Risk Program Participation, 1990-1996 32
2-3 Estimated MedicarePlus Enrollment, Savings, and Costs, 1996-2002 35

Chapter 3. Acute Care Hospital Payments

3-1 Update Framework for PPS Hospital Operating Payments, Fiscal Year 1997 49

Chapter 4. Post-Acute and Ambulatory Care Providers

4-1 Distribution of Total Medicare and Beneficiary Payments for Selected Part A Services, 1986-1993 66
4-2 Medicare Utilization for Selected Part A Services, 1986-1993 66
4-3 Medicare-Certified Rehabilitation and Long-Term Care Facilities, Selected Years 68
4-4 Medicare Discharges from Rehabilitation and Long-Term Care Facilities, 1990-1993 69
4-5 Medicare Rehabilitation and Long-Term Care Facility Payments, 1990-1993 (In Billions) 69
4-6 Types of Medicare-Certified Skilled Nursing Facilities, Selected Years 70
4-7 Medicare Skilled Nursing Facility Payments and Utilization, 1983-1994 70
4-8 Types of Medicare-Certified Home Health Agencies, 1990-1995 73
4-9 Medicare Home Health Care Payments and Utilization, 1983-1994 73
4-10 Distribution of Home Health Episode Lengths, 1990 and 1993 74
4-11 Number and Type of Home Health Visits, by Episode Length 74
4-12 Payment to Cost Ratios for Hospital-Based and Freestanding Dialysis Facilities, All Dialysis Treatments, 1990-1994 78
4-13 Median Productivity Indicators for Hospital-Based and Freestanding Dialysis Facilities, 1990-1994 79

LIST OF FIGURES

Page

Chapter 2. Medicare's Capitation Program

2-1 MedicarePlus National Average Growth Percentages, 1996-2002 34

Chapter 3. Acute Care Hospital Payments

3-1 Annual Change in Medicare Operating Costs Per Discharge, First 11 Years of PPS (In Percent) 45

3-2 PPS Margins for All Hospitals, First 11 Years of PPS (In Percent) 46

3-3 Total Margins for All Hospitals, First 11 Years of PPS (In Percent) 46

Executive Summary

Since its inception in 1965, the Medicare program has provided health insurance coverage for the elderly and disabled. But this protection has come at a substantial cost to the Federal government. Between 1967 and 1993, total program expenditures climbed more than 30-fold. Medicare payments per person increased, on average, 8 percent annually over the same period. Total program spending reached an estimated $177 billion in 1995, accounting for 12 percent of the Federal budget.

The rise in Medicare spending threatens the solvency of the program's Hospital Insurance Trust Fund, its primary source of income. Moreover, it has been a major contributor to the Federal budget deficit. Payment reforms have been implemented in the past to control spending and extend the solvency of the program. This year, the Congress has focused renewed attention on Medicare spending in its plan to balance the Federal budget by 2002. Both the Congress and the President have proposed Medicare savings that would be substantially greater than any previously achieved. Their proposals, however, reflect different views on the role of the Federal government in financing care for Medicare beneficiaries.

Both the Congress and the President would expand Medicare's reliance on capitation, because of its apparent success in slowing private sector health care spending. Under Medicare's capitation option, called the risk contracting program, Medicare makes an annual per capita payment to a contracting health plan to cover a defined set of services for enrolled beneficiaries. This shifts the responsibility for payment for covered services from the Federal government to the health plans. Medicare's spending for beneficiaries enrolled in the capitation program, therefore, is predictable and limited to the per capita payment. Further, health plans have incentives to manage service use and control their costs.

As currently designed, however, Medicare's risk contracting program does not fully realize the potential benefits associated with capitation. The program's per capita rates appear to be too high in some markets, resulting in overpayment to plans, and too low in others, discouraging plan participation in those areas. To remedy this, the Congress and the President propose changing the payment rate setting method to generate more savings from the risk program and increase the number of plans available to beneficiaries. In addition, the Congress specifies annual increases to the capitation rates to reduce spending growth further.

Even with increased emphasis on capitation arrangements, the vast majority of Medicare services will continue to be purchased on a fee-for-service basis. Both the President and the Congress would make significant changes to Medicare's traditional fee-for-service payment methods and, in fact, would achieve most of their Medicare savings through this part of the program. In addition, the Congress would implement a savings enforcement tool called the "failsafe budget mechanism." For the first time in Medicare's history, total spending per enrollee in both the capitation and fee-for-service programs would be capped each year at a congressionally mandated amount, regardless of the number or types of services provided or the underlying rate of general inflation.

At the same time that these significant changes to Medicare are being considered, private sector financing and delivery of medical care are undergoing substantial changes. After years of rapid cost growth, underwritten by payment increases from private payers, hospitals are facing intense pressure to constrain their costs. They have successfully responded by holding cost growth below the level of inflation. As a group, hospitals have been able to maintain their financial condition. But some facilities, because of commitments to teaching or providing care to the poor, may be limited in their ability to continue to meet payer demands for constrained cost growth. Both the Congress and the President propose reductions to Medicare's teaching and disproportionate share adjustments. In light of these changes, the distribution of Medicare payments becomes more critical to ensure appropriate access and adequate quality of care for beneficiaries.

4

As hospitals have struggled to constrain their costs, the share of Medicare expenditures devoted to post-acute and ambulatory care providers has climbed. Medicare has imposed ever-tighter constraints on payments per service, but has failed to adequately address utilization. Volume control in these settings is particularly difficult because services can be provided in various sites. Payment constraints applied to one provider are likely to cause higher use in another. The Congress and the President begin to address this problem in two sectors with particularly high growth—skilled nursing facilities and home health agencies—by mandating prospective payment systems that bundle a set of services for a single payment.

The significant Medicare savings proposed by the Congress and the President, as well as Medicaid reforms and private sector cost-control efforts, will require health care providers to continue to modify their practices. In this dynamic environment, the challenge will be for Medicare to monitor the impact of these changes and appropriately adjust its policies to ensure continued protection of its beneficiaries.

RECOMMENDATIONS FOR FISCAL YEAR 1996

The Prospective Payment Assessment Commission (ProPAC) is responsible for advising the Congress and the Secretary of Health and Human Services on Medicare's payment policies for all health care facilities and their effects on beneficiaries and the facilities themselves. In addition, the Commission monitors important trends in the nation's health care system. In this report, ProPAC discusses the major reforms proposed for the Medicare program and the ramifications these might have for beneficiaries and providers alike. The Commission presents 26 recommendations covering a range of topics related to these reforms, in the context of promoting more efficient operation of the health care system while maintaining access to quality care for Medicare enrollees.

Recommendation 1: Slowing the Rise in Medicare Spending

The Commission supports the efforts of the Congress and the President to reduce the growth in Medicare expenditures. Over time, spending for services furnished to Medicare enrollees should increase at rates comparable to those in a cost- and quality-conscious private sector.

Recommendation 2: The Failsafe Budget Mechanism

Any failsafe budget mechanism should include a more effective risk adjustment factor to ensure payment equity between the Medicare capitation and traditional fee-for-service programs. In addition, changes in inflation that differ substantially from CBO forecasts could require modifications to the Medicare benefit budget over time. Revisions to the proposed fee-for-service sector budget allocations could also be needed as medical practices change.

Recommendation 3: Expanding Medicare's Capitation Program

The Commission supports reforming the Medicare capitation program to control spending while expanding beneficiary choice.

Recommendation 4: Setting and Updating the Capitation Rates

Geographic variation in the capitation rates and the volatility of the rates from year to year should be reduced. The Secretary should develop and test alternative payment methods that would allow the payment rates to reflect changes in local market conditions.

Recommendation 5: Improving Risk Adjustment Methods

The risk adjustment methods used to set Medicare capitation payments should better reflect variation in the likely use of services. Even as research on the development of new methods continues, the Secretary should implement interim improvements as soon as possible.

Recommendation 6: Medical Savings Accounts

The Congress's high deductible/MSA option would provide an additional choice for Medicare enrollees. ProPAC is concerned, however, that the current Medicare risk adjustment method is not sufficient to protect the program from adverse selection and resulting excess spending. The likelihood that

rates would better reflect risk would be enhanced if Medicare enrollees were required to remain in the MSA option at least for several years.

Recommendation 7: The MedicarePlus Fee-for-Service Option

Enrollees choosing the fee-for-service option under the proposed MedicarePlus program could be responsible for substantially higher fees than what their plans would pay. The Secretary should monitor the impact of this option on beneficiary liability and on possible reductions in physician and other provider participation in traditional Medicare.

Recommendation 8: Information for Beneficiary Health Plan Choices

Medicare should make available to beneficiaries information about the performance of plans and local providers. The Secretary should identify the information beneficiaries need to make appropriate choices and develop innovative ways to improve access to it.

Recommendation 9: Health Plan Accountability

Medicare must hold health plans accountable for the appropriate use of Medicare funds. In addition, standards must be developed and enforced to ensure that Medicare beneficiaries will receive services of appropriate quality.

Recommendation 10: Updating PPS Operating Rates

ProPAC's update framework would support an update between 0.7 percentage points and 2.0 percentage points less than the increase in the hospital market basket index. The methodology employed by the Commission in previous years would lead to a recommendation of about market basket minus 1.5 percentage points, roughly corresponding to the midpoint of that range. In light of the significant changes occurring in health care delivery, the Commission believes that PPS payment rate increases could be held to market basket minus 2.0 percentage points for the next year or two. However, it is concerned about the potential effects of continuing updates at that level on hospitals' ability to provide quality care to Medicare beneficiaries and other populations.

Recommendation 11: Setting Capital Payment Rates

Prospective per discharge payment rates for inpatient capital costs should be set by developing an appropriate base payment rate and applying an annual update. The capital update should reflect the prices of capital assets, capital financing costs, and other factors related to the capital costs hospitals incur in efficiently providing inpatient care to Medicare beneficiaries.

Recommendation 12: Updating Payments to PPS-Excluded Hospitals and Distinct-Part Units

ProPAC's update framework would support an average update to the TEFRA target amounts equal to the projected increase in the market basket index minus 0.6 percentage points for fiscal year 1997. This average is within the range of facility-specific updates in the Congress's proposal, which is between the market basket increase and 2.5 percentage points below market basket. Major changes to the TEFRA target amounts should not be made at this time. Rather, a prospective payment system for PPS-excluded hospitals and distinct-part units should be implemented as soon as practicable.

Recommendation 13: Broadening Financial Support to Teaching Hospitals

Explicit financial support for graduate medical education activities should not be limited to the Medicare program. Mechanisms to broaden financial support for teaching-related activities in hospitals and other locations should be developed.

Recommendation 14: Medicare Payments for Graduate Medical Education Costs

ProPAC supports changes in Medicare teaching payments that would encourage an appropriate distribution of residents across specialties and discourage inappropriate growth in the total number of residents.

Recommendation 15: Medicare Indirect Medical Education Payments

The Medicare indirect medical education adjustment should be reduced from its current 7.7 percent level to 7.0 percent.

6

Recommendation 16: Distributing Additional Teaching-Related Payments

Funds that provide broader financial support for graduate medical education should be distributed in a way that corresponds to the additional costs incurred by teaching facilities. Providers that treat enrollees in capitation plans should receive teaching-related payments for those patients as well as for the other patients they serve.

Recommendation 17: Disproportionate Share Hospital Payments

The Commission is concerned about the potential impact of reductions in DSH payments. Hospitals that treat a large number of the uninsured could be particularly vulnerable because of recent changes in the health care environment. Large reductions in DSH payments would threaten the continued ability of many of these hospitals to serve populations who depend on them for access to care.

Recommendation 18: Method for Distributing Disproportionate Share Payments

The structure of the DSH adjustment should be reviewed to make certain that available funds are distributed equitably among the hospitals most in need of assistance. This may require collecting new data to develop a better measure of the services hospitals provide to indigent patients.

Recommendation 19: Discharges from PPS Hospitals to Other Facilities

Medicare payments should be modified to account for the shift in services from acute to post-acute settings. Broadening the definition of transfer cases, however, is not an appropriate approach.

Recommendation 20: Prospective Payment for Post-Acute Care

Prospective payment systems should be implemented for all post-acute services. The payment method for each service should be consistent across delivery sites. The Secretary should explore methods to control volume of post-acute service use, such as bundling services for a single payment.

Recommendation 21: Case-Mix Measures for Post-Acute Services

Reliable case-mix measurement is important in prospective payment systems to account for resource use and to analyze treatment patterns and costs across sites. The Secretary should coordinate case-mix research across post-acute care settings, using consistent methods for measuring patient acuity and resource use.

Recommendation 22: Interim Fee-for-Service Payment Method for Skilled Nursing Facility Services

An interim payment method should be implemented to control the growth in Medicare payments for SNF services until a comprehensive prospective payment system is established. A system based on historical data and facility-specific limits, however, may not allow facilities to respond appropriately to changes in a dynamic environment.

Recommendation 23: Interim Fee-for-Service Payment Method for Home Health Care

Until a fully prospective payment system is developed, the Commission supports adopting episode-based payment limits. In addition, beneficiary copayments, subject to an annual limit, should be introduced.

Recommendation 24: Update to the Composite Rate for Dialysis Services

The Secretary should develop methods to control total Medicare per capita expenditures for ESRD beneficiaries. In the meantime, the composite rate should be updated by 2.7 percent for hospital-based dialysis facilities and by 2.0 percent for freestanding facilities for fiscal year 1997. The Secretary should also develop reliable measures of patient severity and outcomes to analyze the relationships among treatment processes, patient outcomes, and costs. These factors should be considered in evaluating the need for and the level of future payment updates.

Recommendation 25: Prospective Payment for Hospital Outpatient Services

A comprehensive prospective payment system should be developed for hospital outpatient ser-

vices. Such a system should include a strategy for controlling the volume of ambulatory services.

Recommendation 26: Beneficiary Liability for Hospital Outpatient Services

The growing financial burden for Medicare enrollees who receive services in hospital outpatient departments should be alleviated immediately. Beneficiary coinsurance for these services should be limited to 20 percent of the Medicare-allowed payment, as it is in other settings. For services not paid on a prospective basis, the Secretary should establish a new method for determining beneficiary copayments based on estimated allowed payments since they cannot be calculated precisely when services are delivered.

Chapter 1

Reforming the Medicare Program

For 30 years, Medicare has fulfilled its promise of protecting the elderly, and subsequently the disabled, from financial impoverishment due to illness. This protection, however, has come at a substantial cost to the Federal government and taxpayers as well as to some Medicare beneficiaries. In 1967, the program covered 19.5 million people at a cost of $4.8 billion.[1] By 1993, program spending had increased more than 30-fold to $151.1 billion, with the number of enrollees almost doubling to 36.3 million. Medicare beneficiaries have felt the effects of the spending increases, with their cost-sharing responsibilities during 1993 exceeding $30 billion.[2] Out-of-pocket costs for non-covered services also have climbed sharply.

Medicare program spending reached an estimated $177 billion in fiscal year 1995, accounting for 12 percent of the Federal budget. The Congressional Budget Office (CBO) projects that, under current law, program spending will grow to $332 billion by fiscal year 2002.[3] Furthermore, the Federal share of Medicaid payments is expected to climb from $89 billion to $173 billion over this time. Consequently, spending for Medicare and Medicaid in 2002 is projected to consume more than one-fourth of the total Federal budget.

The rise in the cost of these entitlement programs is a major contributor to the projected growth in the Federal budget deficit. The relentless increases in Medicare spending for hospital, skilled nursing facility (SNF), home health, and other services also have led to the recent warning that Medicare's primary source of income, the Hospital Insurance (HI) Trust Fund, will not be able to cover anticipated expenses beginning in 2002.

This year, as it has periodically over the past 15 years, the Congress has taken steps to rein in the growth in Medicare spending, extend the solvency of the HI Trust Fund, and balance the Federal budget. The reductions in spending growth now being considered by the Congress and the President, however, are substantially greater than those previously enacted. In addition, the proposal passed by the Congress—and vetoed by the President—embodies a major philosophical change in the role and responsibilities of the Federal government and the nature of the Medicare and Medicaid entitlements.[4]

The President supports the objectives of slowing the rise in Medicare spending, strengthening the financial integrity of the HI Trust Fund, and balancing the Federal budget. His approach, however, varies in fundamental ways from that of the Congress. The President's proposal reflects different budget priorities, allowing larger increases in Medicare and Medicaid spending and favoring smaller tax reductions.[5] His approach also does not incorporate many structural changes to Medicare and Medicaid, such as those proposed by the Congress.

In this chapter of its annual report to the Congress, the Prospective Payment Assessment Commission (ProPAC) examines the Medicare and Medicaid spending trends that led the Congress to conclude that major reforms of these programs were necessary. Past Medicare expenditure patterns and projected spending through 2002 are described. The next sections review the impact of expenditure growth on beneficiaries' financial liabilities, the HI Trust Fund, and the Federal budget deficit. The steps considered by the Congress and the President to modify the Medicare program and slow the rise in spending are then discussed. The chapter concludes with the Commission's recommendations regarding reform of the Medicare program.

In Chapter 2, ProPAC describes and provides its views and recommendations to the Congress on the existing Medicare capitation option and the MedicarePlus program. This program would replace

Medicare's risk-based contracting policies. It also reflects substantial changes in the Congress's view of how Medicare's capitation program should operate. The next two chapters examine changes in the traditional Medicare fee-for-service program. Chapter 3 presents the Commission's recommendations regarding payment policies for inpatient hospital services. In Chapter 4, the rapidly growing areas of post-acute and ambulatory services are discussed, along with recommended changes to their payment policies.

HEALTH CARE SPENDING

Total national health care expenditures are expected to exceed $1 trillion in 1995.[6] The Federal government, the largest single payer for health care, will pay a third of the bill for medical services (see Table 1-1). The Medicare and Medicaid programs will account for $346 billion of this spending, providing health coverage to 66 million people.

The responsibility for funding personal health care services has changed dramatically in the past 35 years, as government and private health insurance programs have expanded. Between 1960 and 1993, individual out-of-pocket spending rose from about $13 billion to almost $158 billion (see Table 1-2). As a share of personal health care spending, however, out-of-pocket expenditures declined from 56 percent to 20 percent, while private sector and government expenditures increased rapidly. Private sector expenditures climbed from about $5 billion to $288 billion. By 1993, the Federal government was spending $259 billion, about 33 percent of personal health care spending, primarily due to rapid expansion of the Medicare and Medicaid programs.

The enactment of Medicare and Medicaid in 1965 was followed by a rapid escalation in the health care portion of Federal, state, and local budgets (see Table 1-3). Health care expenditures increased from 7.6 percent of state and local government spending in 1965 to 12.4 percent in 1993. The effects on the Federal budget were more striking, with health expenditures rising from 3.9 percent to 18.6 percent of total Federal outlays over this period.

The drafters of the original Medicare legislation intended that the Federal government would provide most of the financing for care received by the elderly, but that services would be furnished through the existing private delivery system. The financing was to come primarily through payroll taxes, enrollee premiums and cost sharing, and general revenues. The Congress designed Medicare to pay for hospital and physician services without significantly altering the existing health care financing and delivery system.[7] Thus, many of Medicare's payment policies were modeled after those in the private insurance market. The most important of these were the reliance on fee-for-service payment for physician services and cost-based reimbursement for hospital care.

These policies succeeded in guaranteeing needed care for Medicare beneficiaries. They also improved the financial condition of providers. But

Table 1-1. National Health Expenditures by Source of Funds, Selected Years

	In Billions of Dollars				As a Percentage of Total Expenditures			
		Government				Government		
Year	Private	Federal	State and Local	Total	Private	Federal	State and Local	Total
1965	$ 31	$ 5	$ 5	$ 42	75.3%	11.6%	13.2%	100%
1980	146	72	33	251	58.1	28.7	13.3	100
1985	259	123	52	434	59.7	28.4	11.9	100
1990	410	196	91	697	58.9	28.1	13.0	100
1993	496	281	107	884	56.1	31.7	12.1	100
1995*	552	334	121	1,008	54.8	33.2	12.0	100
2000*	770	528	174	1,472	52.3	35.8	11.8	100
2005*	1,051	821	247	2,119	49.6	38.8	11.6	100

Note: National health expenditures include all spending in the health care sector.

* Projected.

SOURCE: Congressional Budget Office.

Table 1-2. Personal Health Care Expenditures by Source of Funds, Selected Years (In Billions)

Year	Total	Out-of-Pocket	Private	Government	
				Federal	State and Local
1960	$ 23.9	$ 13.4	$ 5.4	$ 2.1	$ 3.0
1970	64.8	25.4	16.9	14.7	7.8
1980	220.1	61.3	71.8	63.4	23.6
1985	380.5	98.8	133.7	111.3	36.7
1990	612.4	138.3	230.7	178.1	65.3
1991	670.8	143.3	250.0	206.0	71.6
1992	729.7	150.6	269.8	234.0	75.3
1993	782.5	157.5	288.0	259.0	78.1

Note: Personal health care expenditures exclude research and construction, administration of public programs and net cost of private health insurance, and government public health activities.

SOURCE: Health Care Financing Administration, Office of the Actuary.

they greatly expanded service capacity and led to the rapid adoption of new and costly technologies, which contributed to the acceleration in Medicare expenditures.

Medicare Program Expenditures

In 1967—its first full year of operation—Medicare spent $4.8 billion on behalf of its enrollees (see Table 1-4). Eligibility for the Medicare program was expanded in 1972 to people who were disabled as well as to those with end-stage renal disease. By 1980, spending had reached $36.4 billion. Between 1980 and 1993, Medicare expenditures climbed on average more than 11 percent annually, to $151.1 billion. Part of this rise can be attributed to the growth in Medicare enrollees. From 1966 to 1993, the number of enrollees 65 or over rose about 2 percent a year and, since 1973, the number of disabled enrollees has gone up about 4 percent annually. The total Medicare-covered population expanded from 19.5 million in 1967 to 36.3 million in 1993.

Table 1-3. Government Health Expenditures as a Percentage of Total Government Expenditures, Selected Years

Year	Federal	State and Local
1960	3.1%	7.8%
1965	3.9	7.6
1966	5.2	7.5
1967	7.3	7.6
1970	8.5	7.8
1975	10.0	8.5
1980	11.7	9.9
1985	12.7	11.0
1990	15.4	12.9
1991	16.9	12.8
1992	17.4	12.6
1993	18.6	12.4

SOURCE: Health Care Financing Administration, Office of the Actuary and Office of National Health Statistics; and Department of Commerce, Bureau of Economic Analysis.

In addition to the continuing increases in enrollees, the share of Medicare beneficiaries using services paid for by the program has risen sharply over the years. This has occurred partly because the growth in the Part B deductible has not kept pace with the rise in health care costs. Consequently, a growing number of beneficiaries meet the deductible requirements. Only 37 percent of enrollees, about 7 million people, had Medicare payments made on their behalf in 1967. By 1980, 18 million enrollees were being served, representing 63 percent of the Medicare population. In 1993 about 80 percent of the Medicare population, 29 million enrollees, used services paid for by the program. It is not surprising, therefore, that Medicare spending has increased. But this does not tell the full story.

Medicare program payments for each person served also have escalated at a rapid pace, from $593 in 1967 to $4,387 in 1993—an 8 percent average annual rate of increase.[8] This rise is substantially larger than can be explained by general inflation during this time. In part, the growth in payments per person reflects medical inflation above that in the general economy. More important, however, are the continuing increases in the number and complexity of services furnished to Medicare beneficiaries.

Table 1-4. Personal Health Care Expenditures Under Medicare and Medicaid, Selected Years

	Medicare		Medicaid	
Year	Spending (In Billions)	Enrollees (In Millions)	Spending* (In Billions)	Recipients (In Millions)
1967	$ 4.8	19.5	$ 3.0	—
1970	7.3	20.5	5.1	—
1973	10.2	23.5	9.1	19.6
1980	36.4	28.5	24.8	21.6
1985	70.3	31.1	39.2	21.8
1990	109.6	34.2	71.7	25.3
1993	151.1	36.3	112.8	33.4

* Includes Federal and state shares.

SOURCE: Health Care Financing Administration, Office of the Actuary.

Changes in Medicare policies will have different effects on beneficiaries, since a relatively small number of them account for a large portion of expenditures. In 1993, 53 percent had payments of less than $500 made on their behalf.[9] By contrast, 10 percent had payments of $10,000 or more, representing almost three-quarters of all Medicare program spending. Slightly more than 3 percent had payments of $25,000 or more; this group accounted for 39 percent of all spending.

Medicaid Program Expenditures

Medicaid is a joint Federal and state program intended to provide medical care to low-income people who meet certain requirements. States are given substantial flexibility, within Federal guidelines, to determine eligibility and benefits for their residents. Consequently, eligibility, coverage, and payment rules vary greatly among the states. Medicare enrollees are eligible for Medicaid if they meet the income and asset standards set by a state. About 12 percent of the Medicare population was dually eligible for both programs in 1993. In addition, state Medicaid programs are required to pay Medicare premiums and cost-sharing amounts for certain low-income persons, called Qualified Medicare Beneficiaries.

The Medicaid program has experienced substantial growth, adding pressure to state and Federal budgets. Medicaid spending spiraled from $3.0 billion in 1967 to $112.8 billion in 1993. During the 1980s, Medicaid program spending growth was relatively stable. In the early 1990s, however, expenditures jumped, in large part because of expansions in eligibility, states' use of provider tax and donation programs to increase Federal matching payments, and changes in legislation that allowed states to increase payments dramatically to certain hospitals serving a disproportionate share of low-income patients.

Though more than 70 percent of Medicaid recipients were children and low-income adults in 1993, they accounted for only 30 percent of Medicaid payments. About 15.5 million children—almost half of all Medicaid recipients—received covered services. These children, however, generated only 16 percent of Medicaid payments. By contrast, about 27 percent of Medicaid enrollees were aged, blind, or disabled. This group, which included many Medicare beneficiaries, accounted for nearly 70 percent of total Medicaid spending, much of which was for long-term nursing home care. Hence, the Medicaid program serves important needs for the low-income Medicare population.

MEDICARE BENEFICIARY COST SHARING

The rapid rise in the cost of medical services has increased the financial burden for many Medicare enrollees, especially those with limited incomes. Medicare beneficiaries generally are responsible for paying a certain amount of the bill for the services they receive, and as program spending has gone up, so have their liabilities. These cost-sharing responsibilities include the inpatient hospital deductible, coinsurance requirements, and balance billing payments to certain physicians whose charges are higher than the payment allowed by Medicare. Beneficiaries must also pay for all of Medicare's allowed amount for physician and other Part B services until they reach a certain deductible.

Between 1977 and 1993, beneficiary liability as a share of overall Medicare spending dropped modestly, from 18 percent to 15 percent. Total beneficiary out-of-pocket spending for services covered by Medicare, however, rose more than five-fold.[10]

Over time the pattern of cost sharing has changed, reflecting differences in the types of providers used and the costs of various services. The share of beneficiary out-of-pocket spending for

Part A services, especially hospital and SNF care, has accelerated. Part B liability, which accounted for about 76 percent of cost sharing in 1977, fell to about 67 percent in 1993. A major factor in this decline was the limit on balance billing that the Congress enacted as part of physician payment reform in 1989. In addition, the increase in the Part B deductible, from $60 to $100 during this time, lagged far behind the rise in program spending or general inflation. The decrease in the deductible as a portion of Part B liability, however, was offset by the substantial growth in the share of coinsurance payments.

The average yearly cost-sharing liability per Medicare enrollee went from $174 in 1977 to $626 in 1993. This figure hides large differences in payments among beneficiaries for Medicare-covered services. Almost 65 percent of enrollees incurred a liability of less than $500 in 1992, but 6 percent were responsible for more than $2,000 in out-of-pocket spending. A small group of beneficiaries, 1.7 percent, confronted payments of $5,000 or more. Thus, for certain beneficiaries the financial protection from the costs of major illness offered by the Medicare program falls far short of the need.

In addition to these cost-sharing liabilities, Medicare beneficiaries are responsible for payment of the Part B premium if they elect this coverage, as almost all do. There also are substantial gaps in Medicare coverage for certain services (especially medications) that the elderly and disabled frequently require. Most Medicare beneficiaries must pay for these non-covered services directly or through private supplemental insurance.

To reduce the risk of significant out-of-pocket spending, about 75 percent of Medicare enrollees relied on private insurance to supplement their Medicare coverage in 1992. Another 12 percent were dually eligible for Medicaid, which provides financial assistance in meeting these extra costs. About 11 percent of Medicare enrollees had no supplemental coverage and were at full risk for cost-sharing expenses, while the rest were covered by other programs. The increase in out-of-pocket spending also may contribute to the growth in the number of beneficiaries who are choosing plans in Medicare's capitation program. Many of these plans require little or no cost sharing. They also frequently supplement their benefit packages with services such as prescription drugs, which Medicare does not cover.

THE SOLVENCY OF THE MEDICARE TRUST FUNDS

The Medicare program is financed through a variety of mechanisms, with funding channeled through two trust funds. The primary source of income for the Hospital Insurance Trust Fund is a dedicated payroll tax, paid by employers, employees, and the self-employed. Although Medicare is an entitlement, this fund must be solvent to pay claims on behalf of beneficiaries receiving Part A services, because trust fund balances limit spending authority. If the trust fund became insolvent, Part A Medicare payments would be limited to the money that accrued to the fund from current payroll tax receipts.

By contrast, the Part B Supplementary Medical Insurance Trust Fund is financed primarily through general revenues and enrollee premiums. General revenues and premiums each contributed about 49 percent of the fund's income in 1972. By 1993, the general revenue share was 72 percent, with premiums adding 25 percent. Although spending from this fund has been growing rapidly, insolvency is not a problem since general revenues are required to cover expected outlays that exceed premiums and other receipts. The growth in Part B Medicare spending, therefore, increases the Federal budget and contributes to the deficit.

The trust funds' trustees issue an annual report projecting revenues and expenses and evaluating the actuarial condition of each fund. To arrive at their conclusions, the trustees make assumptions about the growth in taxable wages and salaries, future rates of inflation, the number and life expectancy of Medicare enrollees, and patterns of service use. They base their projections on current Medicare statutory authority. In their 1995 report, the trustees projected that the HI Trust Fund would begin to run a deficit in 1996 and would be insolvent in 2002, seven years from the release of the report.[11]

While projections of trust fund insolvency are not a new occurrence, they have received much more attention this year. Since 1970, on several occasions the trustees have projected insolvency of

the HI Trust Fund within seven years (see Table 1-5). Their projections have not materialized, primarily because the Congress has taken action to avert the impending insolvency. In 1972, the Congress raised the Medicare payroll tax rates and increased the ceiling on the level of earnings to which the tax is applied. The Congress also has enacted many provisions intended to control Part A expenditures by curbing the growth in payments to hospitals and other providers. In 1983, the Congress enacted the Medicare prospective payment system (PPS) for inpatient hospital services and other initiatives intended to slow expenditure growth. Steps also were taken that year, and again in 1990 and 1993, to increase HI Trust Fund revenues.

Because Medicare has relied primarily on a fee-for-service payment system, initiatives to slow the rise in spending have focused on reducing the price that Medicare pays for each service furnished.

Table 1-5. Number of Years from Trustees' Projection Until Insolvency of the Hospital Insurance Trust Fund

Year of Trustees' Report	Year of Insolvency
1970	2
1971	2
1972	4
1973	None indicated
1974	None indicated
1975	About 20*
1976	About 15*
1977	About 10*
1978	12
1979	13
1980	14
1981	10
1982	5
1983	7
1984	7
1985	13
1986	10
1986 amended	12
1987	15
1988	17
1989	None indicated
1990	13
1991	14
1992	10
1993	6
1994	7
1995	7

* Projections for 1975, 1976, and 1977 put the dates of insolvency, respectively, in "the late 1990s," "the early 1990s," and "the late 1980s."

SOURCE: Henry J. Aaron and Robert D. Reischauer, "The Medicare Reform Debate: What Is the Next Step?" *Health Affairs*, Winter 1995.

These actions have had less effect on the overall program budget, as the number and complexity of services provided have burgeoned, perpetuating the rise in program expenditures.

HI Trust Fund solvency remains threatened over the long term, in spite of past efforts to shore up the fund temporarily and reductions in spending growth currently considered by the Congress and the President. This is because the ratio of workers paying Medicare taxes to Medicare enrollees is declining as the baby boom generation ages into Medicare.

MEDICARE, MEDICAID, AND THE FEDERAL BUDGET

The Congressional Budget Office estimates that total Federal revenues in fiscal year 1995 will reach almost $1.36 trillion (see Table 1-6). Expected outlays will be just under $1.52 trillion, resulting in a $161 billion budget deficit for the year. The cumulative Federal debt, as a result of years of deficit spending, now stands at $4.9 trillion. The 1995 deficit is the smallest since 1989, but CBO projects that it will rise steadily over the next decade if current budgetary policies remain unchanged.

Federal spending is divided into mandatory and discretionary categories. Interest on the national debt is treated separately. Defense, international affairs, transportation, and domestic programs such as biomedical research funding are examples of discretionary spending. This spending is subject to review in the annual appropriations process. In addition, under current law it is subject to spending limits through 1998. Consequently, total discretionary spending is controlled, and policy makers must make trade-offs among competing programs. CBO projects that total discretionary spending will decrease from 35 percent of total Federal outlays in 1996 to 30 percent in 2002, if the current spending limits expire in 1998 as scheduled.

By contrast, mandatory entitlement programs like Medicare and Medicaid are not subject to annual review, the appropriations process, or spending limits. In 1996, total mandatory spending will account for 55 percent of Federal outlays. CBO estimates that the share of mandatory expenditures will climb to 62 percent in 2002. Medicare

Table 1-6. Selected Congressional Budget Office Projections, Fiscal Years 1995-2002 (In Billions)

Budget Category	1995	1996	1997	1998	1999	2000	2001	2002
Total revenues	$1,357	$1,423	$1,487	$1,553	$1,625	$1,703	$1,783	$1,871
Total outlays	1,518	1,595	1,668	1,736	1,820	1,907	1,994	2,100
Deficit	161	172	182	183	195	204	211	228
Medicare[a]	177	196	216	236	258	281	305	332
Medicaid[b]	89	97	107	118	130	143	157	173

[a] Mandatory outlays.

[b] Federal share of Medicaid payments.

SOURCE: Congressional Budget Office.

and Medicaid outlays will be responsible for 17 percent of Federal spending in 1996. Under current policies, these programs are expected to consume 27 percent of the Federal budget in 2002. CBO points to the rapid growth in Medicare and Medicaid spending as the major factor driving up its deficit projections.

The Congress, intent on eliminating the Federal deficit by 2002, has looked to mandatory spending—and especially the rapidly growing health entitlement programs—for substantial budget savings. The Congress can control Medicare spending by changing eligibility policies or reducing benefits. It also can require higher beneficiary cost sharing or raise taxes. These approaches are regarded as politically unattractive, however. Consequently, over the past decade as it struggled with the Federal deficit, the Congress has looked primarily to reductions in payments to providers as the method of slowing Medicare spending growth. The current proposals generally continue to follow that path.

RENEWED ACTION BY THE CONGRESS

In November 1994, the American public elected, for the first time in several decades, a Republican-controlled Congress. The 104th Congress began its work in early 1995, determined to balance the Federal budget by 2002. The first formal step in the process was the passage of a budget resolution for fiscal year 1996. The Congress laid out its spending priorities and identified the broad program areas that it would target to balance the budget by 2002. The legislative process requires an independent projection of baseline expenditures and an assessment of the savings that can be expected from congressional proposals. The Congressional Budget Office is charged with these responsibilities.

CBO's spending baseline reflects assumptions regarding economic growth and the level of future spending under current laws. The December 1995 update of the baseline projected that the budget deficit would rise from $161 billion in 1995 to $228 billion in 2002. To reduce the deficit, it is necessary for the Congress to enact legislation containing budget savings. CBO credits a legislative proposal with savings if it will result in reductions from the forecasted baseline growth. Thus, savings may be achieved even if spending continues to rise.

Medicare Savings

CBO projects that under current law, Medicare outlays (before subtracting offsetting premium receipts) will rise from about $177 billion in 1995 to almost $332 billion in 2002, or 9.4 percent annually (see Table 1-7). As a major contributor to the deficit, the Medicare program was initially targeted by the Congress for $270 billion in savings over the next seven years. Revised CBO baseline estimates, however, projected slower Medicare spending growth. Consequently, the estimate of the savings in the bill passed by the Congress fell to $227 billion.[12] Under this proposal, Medicare expenditures would rise at an annual rate of 7.2 percent.

By contrast, the President's proposal would result in $102 billion in total savings and an annual growth rate of 7.6 percent. A separate bill (H.R. 2530), supported by a coalition of members of the House of Representatives, contains $153 billion in Medicare reductions. The coalition's proposal would result in Medicare mandatory spending increases of 7.5 percent annually.[13]

18

Table 1-7. Medicare and Medicaid Baseline Spending and Estimates Under Alternative Proposals, 1995-2002 (In Billions)

	Mandatory Outlays				Total Net	
Proposal	1995	1996	2002	Annual Increase 1995-2002	Outlays[a] 1996-2002	Savings[a] 1996-2002
Medicare:						
Baseline	$177.4	$196.4	$331.8	9.4%	$1,679.5	—
Congress[b]	177.4	192.9	288.6	7.2	1,452.8	$226.7
President[c]	177.4	196.4	296.4	7.6	1,578.0	101.5
Coalition[d]	177.4	192.2	294.1	7.5	1,526.8	152.7
Republican offer[e]	177.4	196.4	292.0	7.4	1,511.5	168.0
President's budget[f]	—	—	—	—	1,555.3	124.2
Medicaid:						
Baseline	89.1	97.2	172.6	9.9	924.1	—
Congress[b]	89.1	97.1	127.4	5.2	791.4	132.7
President[c]	89.1	97.2	154.0	8.1	872.4	51.7
Coalition[d]	89.1	97.2	162.5	9.0	877.9	46.2

Note: Baseline spending and other estimates based on Congressional Budget Office December 1995 budget baseline.

[a] Includes effect of premium increases.

[b] H.R. 2491, the "Balanced Budget Act of 1995," passed by the Congress on November 20, 1995.

[c] The "Balanced Budget Act of 1995 for Economic Growth and Fairness," released by the President on December 7, 1995.

[d] H.R. 2530, the "coalition budget," introduced on October 25, 1995.

[e] Republican offer presented to the President on January 5, 1996, as estimated by the House of Representatives, Budget Committee.

[f] President's 1997 budget released on February 5, 1996, based on savings estimated by the Office of Management and Budget.

SOURCE: Congressional Budget Office; House of Representatives, Budget Committee; and Office of Management and Budget.

The Republican leadership in the Congress and the President have attempted to arrive at an agreement resolving the differences in their proposals. As part of their negotiations, the Republican leadership submitted an "offer" that would reduce the total savings in their plan from $227 billion to $168 billion. The President also has revised his proposal, increasing Medicare savings from $102 billion to $124 billion.

The annual increase in Medicare spending is similar in all the proposals, ranging from 7.2 percent to 7.6 percent. The variation in total savings, however, is much greater due to differences in the growth of Part B premiums among the proposals.

Medicaid Savings

Because of its substantial growth, the Medicaid program also is a target for spending reductions. CBO projects that the Federal share of this program will climb from roughly $89 billion in 1995 to nearly $173 billion in 2002, an annual rate of 9.9 percent. The legislation passed by the Congress would slow this rate to 5.2 percent over the seven-year period, saving just under $133 billion.

Medicaid spending under the President's proposal would increase, on average, 8.1 percent a year, saving almost $52 billion. The coalition's approach is similar, leading to 9.0 percent annual growth and about $46 billion in expenditure reductions.

The MedicarePlus Program

The Congress is especially interested in expanding Medicare's capitation program. This would achieve both of the Congress's primary goals: slowing Medicare entitlement spending and reducing government control over the program.

Under Medicare's existing capitation program, participating health maintenance organizations contract to provide all covered services for enrolled beneficiaries in return for a predetermined

monthly payment per enrollee. This arrangement shifts the responsibility for payment for individual services furnished to beneficiaries from the Federal government to private plans. The proposed MedicarePlus program would expand the variety of health plans available to Medicare enrollees. It also would sever the connection between the capitation amount and spending in the fee-for-service program. The annual update to the capitation rate would be set in law to achieve the Medicare spending level desired by the Congress. The Congress has also expressed its dissatisfaction with the current administration of the capitation program. Its proposal would move program management from the Health Care Financing Administration to another entity within the Department of Health and Human Services.

The MedicarePlus program would include a wide range of options that meet the desire of many members of the Congress to eliminate Federal government involvement in the care Medicare beneficiaries receive. Especially noteworthy are the options to allow beneficiaries to join a private fee-for-service program or to select a medical savings account. Both of these choices would represent a significant change in the responsibilities of the Medicare program.

The Traditional Fee-for-Service Program

The traditional fee-for-service program continues to account for most of Medicare's spending. Consequently, almost 70 percent of the savings in the congressional proposal comes from this program (see Table 1-8). The 1995 base year spending and the projected increases over the next seven years differ greatly across types of providers (see Table 1-9). The savings would be spread across hospitals, physicians, and other providers and suppliers generally in proportion to projected spending increases. The bill also would move payment for home health services from a cost to a prospective payment basis, create facility-specific payment limits for ancillary services furnished in skilled nursing facilities, and provide for a SNF prospective payment system beginning in fiscal year 1998. Although the proposal slows the growth in Medicare payments to teaching hospitals, it provides new funding from general revenues for a Teaching Hospital and Graduate Medical Education Trust Fund.

Table 1-8. Estimated Savings from the Congressional Proposal, by Category, 1996-2002 (In Billions)

Category	Estimated Savings
Fee-for-service:	
Inpatient hospital	$ 64.7
Outpatient hospital and ambulatory	19.1
Physicians	12.6
Home health	17.0
Skilled nursing	10.0
Other services	19.0
Total fee-for-service	142.4
Failsafe	11.5
Part B premiums	54.2
MedicarePlus	18.6
Total	226.7

SOURCE: Congressional Budget Office.

A NEW PHILOSOPHY

The legislation agreed to by the Congress includes stronger controls than any previously enacted to ensure that spending for the care furnished to Medicare beneficiaries does not exceed specific targets. The effects of the proposal, however, could extend far beyond its budgetary impact. The approach represents a fundamental change in the nature of the Medicare program. The bill would take a major step in moving the Medicare program from open-ended spending for covered services to a predetermined annual government payment per enrollee. To meet its budget target, the Congress spelled out specific spending rates of increase per enrollee in the MedicarePlus program. As a result, spending for these enrollees would be predictable and controlled.

This is not now the case in the traditional fee-for-service program, which pays hospitals, physicians, and other providers for the care they furnish. The more care these providers give, the more they are paid. Consequently, even when Medicare controls the price it pays for each unit of service, its spending escalates as the number of services increases. The reductions in fee-for-service payment growth contained in the congressional proposal fall short of meeting the seven-year budget

20

Table 1-9. Selected Congressional Budget Office Medicare Spending Estimates, Fiscal Years 1995-2002

Category	1995	1996	1997	1998	1999	2000	2001	2002
Total mandatory (in billions)	$177.4	$196.4	$215.9	$236.4	$258.1	$280.7	$305.3	$331.8
Part A enrollment (in millions)	37.0	37.6	38.2	38.7	39.2	39.8	40.2	40.7
Part A benefits (in billions)	$113.6	$124.8	$136.0	$147.2	$159.0	$171.2	$184.2	$197.7
Hospitals	80.2	84.5	88.8	93.9	99.5	105.2	111.0	116.7
PPS hospitals	68.9	72.4	75.6	79.3	83.2	87.2	91.2	95.3
Indirect medical education	4.3	4.6	5.2	5.8	6.4	7.0	7.7	8.5
Graduate medical education*	1.9	2.1	2.3	2.5	2.7	2.8	3.0	3.2
Disproportionate share	3.4	3.5	3.6	3.8	3.9	4.1	4.3	4.4
Inpatient capital*	7.9	9.6	10.4	11.1	11.8	12.6	13.1	13.6
Home health	14.7	17.2	19.8	22.2	24.2	26.2	28.3	30.6
Skilled nursing facility	9.0	10.8	12.2	13.3	14.5	15.7	17.0	18.4
Part B enrollment (in millions)	35.7	36.3	36.8	37.2	37.7	38.1	38.5	39.0
Part B benefits (in billions)	$ 63.5	$ 71.2	$ 79.6	$ 88.9	$ 98.7	$109.1	$120.8	$133.8
Physicians	32.2	36.0	38.8	42.1	45.2	47.9	50.8	53.8
Hospital outpatient	10.6	12.1	13.7	15.5	17.6	19.8	22.4	25.2

Note: Based on December 1995 budget baseline.

* Includes PPS and other hospitals.

SOURCE: Congressional Budget Office.

target by $11.5 billion (after offsetting premium increases); that is, if spending rises at CBO's projected rate, outlays would exceed the target by this much. To make certain that spending is not more than the predetermined annual amount for each Medicare enrollee in the fee-for-service program, the Congress would impose a method to enforce the budget limits.

THE FAILSAFE BUDGET MECHANISM

An important aspect of the bill passed by the Congress is a savings enforcement tool called the "failsafe budget mechanism." For the first time in Medicare's history, total spending per enrollee in both the capitation and fee-for-service programs would be capped each year at a congressionally mandated amount. Medicare would still make payments to providers on behalf of beneficiaries. But total Medicare spending would be the same, even if the number of services provided grew or the rate of inflation changed.

Medicare Benefit Budget and Budget Allotment

The failsafe mechanism contains a specific annual Medicare benefit budget for fiscal years 1996 through 2002. This budget reflects the spending levels contained in the Congress's proposal. It includes all Medicare benefit payments and would meet the congressional objective of reducing Medicare spending growth by $227 billion through 2002.

After 2002, an update formula would be applied to the budget for the preceding year. This would result in 5 percent annual Medicare spending growth per enrollee after 2002, regardless of the rate of inflation or service use. This same annual growth rate per enrollee would apply to beneficiaries in both the fee-for-service and the MedicarePlus programs.

Each year, the Secretary would estimate a Medicare budget allotment for the fee-for-service program by removing from the benefit budget projected payments under the MedicarePlus program. The resulting budget allotment would be used as the basis for the failsafe requirements.

Sector Allocation

The Medicare fee-for-service budget allotment would be allocated to each of nine sectors (such as inpatient hospital and home health services). For

fiscal year 1996, baseline projected spending for each sector would equal the sector's fiscal year 1995 expenditures inflated by the sector's annual growth rate, as defined in the legislation. In subsequent years, each sector's legislated growth rate would be applied to the prior year's baseline.

Beginning in fiscal year 1998, the Secretary would reduce payments for all services in any sector that exceeded its target. The payment reduction would be proportional to the amount by which the Secretary estimates spending would exceed the sector target. The percentage reductions would be the same for all services within a sector, but would likely differ across sectors. The Secretary also would be responsible for adjusting payments in all sectors to ensure that aggregate spending would be consistent with the overall fee-for-service budget allotment. In addition, there is authority for a "look-back" adjustment to reflect actual fee-for-service and MedicarePlus expenditures when final data become available. If the President submitted a proposal to revise the baseline annual growth rates for fee-for-service sectors, the Congress would have to consider it under an expedited procedure.

Impact on Fee-for-Service Spending

The bill passed by the Congress would require $11.5 billion in failsafe payment reductions between 1998 and 2002, according to CBO estimates. The ability of fee-for-service providers to avoid triggering the failsafe reductions depends critically on the number and intensity of services they furnish. CBO's estimates of projected spending include assumptions about annual increases in the number and intensity of hospital and SNF admissions, physician visits, and other services. Thus, to avoid these additional reductions, providers would have to furnish fewer services than CBO estimated.

Inflation rates that exceed CBO projections also could trigger subsequent payment reductions. The benefit budget is spelled out in specific dollar amounts between 1996 and 2002. After that, the update formula is a fixed percentage plus growth in the number of Medicare enrollees. There is no mechanism to account for changes in inflation. Annual payment updates for fee-for-service providers, however, are generally linked to a market basket that measures inflation. Substantial increases in inflation would increase payment updates but could subsequently cause large payment reductions. The failsafe budget mechanism would not sunset, although fee-for-service payment updates generally would return to a market basket increase after 2002. Consequently, failsafe reductions could occur even when inflation or the number of services rose slightly.

Fee-for-service providers would be at further risk if healthier Medicare beneficiaries enrolled in MedicarePlus, while sicker beneficiaries remained in the fee-for-service program. The methods Medicare uses to adjust capitation payments explain very little of the variation in expected enrollee spending. The expansion of capitation plan options (especially medical savings accounts) may encourage beneficiaries who expect to use less than the average amount of services to enroll. The failsafe mechanism does not provide for adjustments to growth rates if healthier enrollees select MedicarePlus, leaving costlier ones in the fee-for-service program.

CHANGES IN THE HEALTH CARE ENVIRONMENT

The proposed reform of the Medicare program comes at a time when private sector financing and delivery of medical care are undergoing substantial change. Employers and other buyers of insurance are demanding lower premiums. In response, third-party payers are moving from fee-for-service policies to capitation and other managed care methods to control their costs, while providers are grappling with stepped-up competition for patients. Competition has altered the way providers do business, with the price of services assuming increased importance.

The restructuring of the nation's health care delivery system already has had an impact. National health care expenditures rose about 6 percent in 1994, among the lowest rates in the past three decades. In addition, surveys of employer health care costs show premium increases at historic lows.

The recent reports of private sector success in checking medical care expenditure growth have not been overlooked by those in the Congress who are intent on shifting governmental activities to the private sector. During the debate on the congressional

proposal, many members indicated they thought that the private sector could manage Medicare beneficiaries' care more efficiently than the Federal government could. If this were so, they reasoned, Medicare spending growth could be moderated without adversely affecting the care beneficiaries receive.

Analysts differ, however, in their assessment of the relative success of the government and private payers in restraining the rise in spending. CBO estimates that in 1995, national health care expenditures grew by 6.8 percent. Private sector spending went up 5.5 percent, while Federal outlays rose 9.1 percent. But interpreting such findings is complicated by the lack of good information on the number and health status of enrollees, where they live, and the benefits and services they receive. Further, expenditure levels in prior years must be considered.

When real spending (removing the effects of inflation) per Medicare enrollee is compared with private health insurance spending per insured person, the findings are mixed (see Table 1-10). Between 1979 and 1983, the private sector appears to have outperformed Medicare. From 1983 to 1991, though, the pattern reversed as the Medicare program implemented policies to curb the rise in expenditures. Since 1991, Medicare spending per enrollee again has surged, while private insurance spending per insured person has risen more slowly. The private sector's improved performance likely is related to the rapid move to capitation in recent years. The Medicare program, by contrast, continues to rely predominantly on traditional fee-for-service methods.

Table 1-10. Real Change in Medicare Spending Per Enrollee and Private Health Insurance Spending Per Insured Person, 1979-1993 (In Percent)

Spending Category	1979-1983	1983-1987	1987-1991	1991-1993
Personal health care				
Private insurance	6.3%	6.9%	5.2%	4.7%
Medicare	7.6	2.9	3.8	6.5
Hospital care				
Private insurance	4.8	2.5	3.8	4.4
Medicare	7.0	1.1	2.3	5.9
Physicians' services				
Private insurance	7.0	10.8	5.8	5.1
Medicare	8.8	7.4	2.7	0.3

SOURCE: ProPAC analysis of data from the Health Care Financing Administration, Office of the Actuary.

While the Medicare program has successfully kept the payment per unit of service furnished in check, it has not been able to control increases in service volume and intensity. The private sector has relied more heavily on capitation, which allows plans to control costs by actively negotiating the price they will pay providers and by managing the services their enrollees receive. There is disagreement on how long the recent private sector cost-control trends can be maintained. CBO projects that private spending growth will again begin to rise, reaching 6.9 percent annually by 2000. This increase is still substantially lower than CBO's forecast of growth in Federal government spending under current law.

The moderation in expenditure growth for public programs, together with restraints in private health care spending, will require providers to continue to change their traditional ways of doing business. Hospitals and other providers are positioning themselves to compete in a health care system where total resources will grow much less rapidly than they have for many decades. Consequently, providers strongly support the provisions in the congressional proposal allowing them to develop provider-sponsored networks to compete with health plans.

THE UNINSURED POPULATION

The Congress's plan for modifications in the Medicare and Medicaid entitlements coincides with a decline in the proportion of people receiving health insurance through the workplace. Currently, about 15 percent of the population, almost 40 million people, lack health insurance coverage.

The Medicaid program provides an important safety net for those who would otherwise be uninsured. CBO projects that the number of Medicaid recipients will increase from 35.4 million in 1995 to 43.6 million in 2002 under current law. Medicaid spending reductions and other policy changes in the Congress's proposal could slow this growth substantially, and perhaps actually reduce the number of people eligible for Medicaid. Hence, the proposal—together with a declining share of the population covered by private insurance—could leave millions more uninsured.

Many of the uninsured receive hospital and other medical services. Traditionally, third-party payers have subsidized much of the cost of this uncompensated care. Under the price-competitive health care system that the Congress and private payers are encouraging, however, providers may be unwilling or unable to continue to subsidize such care. In addition, the Congress has proposed reducing the funds the Medicare program has provided to hospitals that care for a disproportionate share of low-income patients. In view of these developments, the problems related to the rising number of uninsured will probably be exacerbated. At some point, they are likely to require further action by the Congress.

CONCLUSIONS AND RECOMMENDATIONS

The Congress and the President continue to attempt to resolve differences in their approaches to curbing the rise in Medicare and Medicaid expenditures, strengthening the HI Trust Fund, and balancing the Federal budget. This chapter concludes with the Commission's recommendations on Medicare spending and the failsafe mechanism in the Congress's proposal.

Recommendation 1: Slowing the Rise in Medicare Spending

The Commission supports the efforts of the Congress and the President to reduce the growth in Medicare expenditures. Over time, spending for services furnished to Medicare enrollees should increase at rates comparable to those in a cost- and quality-conscious private sector.

The continuing escalation in Medicare costs is a threat to the solvency of the HI Trust Fund, a major contributor to the Federal deficit, and a financial burden for many enrollees. In ProPAC's view, the growth in spending for medical care in a private sector with market forces that encourage cost containment is an appropriate benchmark for the Medicare program. Judgments regarding appropriate spending levels and rates of increase should be based on several years' experience to account for short-term factors that may create a misleading picture of the trends. In addition, spending growth should be compared on a per person basis and should recognize the health care needs of an aging and disabled Medicare population.

There are major deficiencies, however, in the data currently used to compare and forecast Medicare and private sector spending growth. The Commission plans to examine available data and alternative methods that could be used to assess trends in Medicare and private health care expenditures and will share these with the Congress.

Recommendation 2: The Failsafe Budget Mechanism

Any failsafe budget mechanism should include a more effective risk adjustment factor to ensure payment equity between the Medicare capitation and traditional fee-for-service programs. In addition, changes in inflation that differ substantially from CBO forecasts could require modifications to the Medicare benefit budget over time. Revisions to the proposed fee-for-service sector budget allocations could also be needed as medical practices change.

The failsafe mechanism in the Congress's proposal would allocate a fixed benefit budget for Medicare's capitation and fee-for-service programs. However, the risk adjustment methods currently used in Medicare's risk contracting program are limited. (See Chapter 2, Recommendation 5.) The lack of a robust risk adjustment method may result in higher-than-intended capitation payments. Further, there is no mechanism to adjust the fee-for-service budget to account for increases in average patient complexity and severity of illness that are likely to result if healthier enrollees select Medicare's capitation program. Consequently, per enrollee capitation payments could be too high and fee-for-service payments too low.

The failsafe mechanism lacks a provision to adjust the benefit budget if general inflation differs notably from CBO's forecast. Future increases in per enrollee spending in both programs may require modifications to reflect changes in inflation. In addition, future allocations of spending across the fee-for-service sectors will be based on spending projections that do not reflect the impact of the proposed legislation. The failsafe mechanism thus could lead to payment inequities among

24

provider groups as patterns of care continue to change. Adjustments in sector budget allocations may be necessary over time to maintain access to quality care for Medicare beneficiaries.

Notes to Chapter 1

1. This figure reflects Medicare program payments, which include payments from Medicare for covered services, but not administrative costs or beneficiary cost-sharing amounts.

2. This figure includes beneficiary deductibles, copayments, and balance billing amounts, but not Part B premiums. See Prospective Payment Assessment Commission, *Medicare and the American Health Care System, Report to Congress,* June 1995, 67.

3. Congressional Budget Office estimates of baseline spending and projected savings, December 1995. CBO makes a distinction between mandatory outlays for benefit payments and discretionary outlays for administrative costs. The estimates cited here include mandatory but not discretionary outlays. They do not reflect offsetting premium receipts. Net Medicare outlays, which include mandatory plus discretionary outlays less premium receipts, are projected to increase from $160 billion in 1995 to $308 billion in 2002.

4. The Medicare provisions are in H.R. 2491, the "Balanced Budget Act of 1995," passed by the Congress on November 20, 1995. This legislation also is referred to as "the conference agreement." The specific provisions referred to are included in Title 8, entitled "The Medicare Preservation Act of 1995."

5. The Medicare provisions of the President's proposal are included in Title 11 of draft legislation, entitled the "Balanced Budget Act of 1995 for Economic Growth and Fairness." This proposal was released by the President on December 7, 1995. It has not been introduced in the Congress.

6. National health expenditures include all spending in the health care sector. Personal health care expenditures exclude research and construction, administration of public programs and net cost of private health insurance, and government public health activities.

7. Medicare Hospital Insurance, called Part A, finances inpatient hospital care, as well as skilled nursing facility, home health, and hospice care. Supplementary Medical Insurance, or Part B, pays for physician services; outpatient services furnished by hospitals, dialysis facilities, and other ambulatory providers; and durable medical equipment and supplies.

8. Health Care Financing Administration, *Medicare and Medicaid Statistical Supplement, 1995* (Washington, DC: U.S. Government Printing Office) 176.

9. Ibid., 182.

10. Ibid., 176.

11. Board of Trustees of the Federal Hospital Insurance Trust Fund, *1995 Annual Report* (Washington, DC).

12. The savings estimates in all the proposals include those resulting from reductions in the growth of Medicare mandatory outlays and, where applicable, premium increases.

13. The Medicare and Medicaid provisions of the proposal are in H.R. 2530, introduced on October 25, 1995. This proposal also is referred to as the "coalition budget" proposal.

Chapter 2

Medicare's Capitation Program

Adoption of capitation payment methods by employers and some state Medicaid programs is widely credited with reducing the growth in their health care spending. Under capitation, the payer makes a predetermined payment per enrollee to a health plan that agrees to cover a defined set of services over a specified period, regardless of the number, type, or cost of services enrollees actually use. This contrasts with the fee-for-service payment method, under which payment is made for each service rendered. Capitation allows the payer to budget for health care spending over a year and eliminates its risk of spending any more than is budgeted. Additionally, capitation gives plans a financial incentive to reduce health care costs.

Medicare's largest capitation program, called the risk contracting program, has some of the cost-containment characteristics of capitation. Yet various aspects of the program design prevent Medicare from fully realizing the benefits of this payment method. Both the Congress and the President have proposed expanding and modifying Medicare's use of capitation. The legislation recently passed by the Congress (H.R. 2491) would broaden the range of private plans that could participate and modify the calculation of capitation amounts to curb the growth in Medicare's spending. The President's proposal would alter and increase the size of the risk program, but would not fundamentally change the way capitation rates are determined.

Refinements to the risk contracting program could contribute to Medicare's cost-control efforts while expanding the health plan choices available to its beneficiaries. To accomplish this, improved risk adjustment methods should be implemented and technical changes made to the calculation of the capitation rates. Further, Medicare needs to act as beneficiaries' agent in providing health plan information and monitoring plan performance. This is critically important because of the financial incentive plans have to limit health care costs.

This chapter first reviews policy issues relating to the existing Medicare risk program. Next, it provides an overview of the Congress's and the President's proposals to change the program. It concludes with the Prospective Payment Assessment Commission's (ProPAC's) recommendations to the Congress about setting the capitation rates, adjusting for risk, offering different types of plans, disseminating information to beneficiaries, and holding plans accountable for the services they provide.

THE MEDICARE RISK PROGRAM

In 1985 Medicare implemented its risk contracting program, under which health maintenance organizations (HMOs) receive a full capitation payment. The risk program was intended to allow Medicare to enjoy some of the advantages of capitation arrangements with health plans, among them predictable spending and savings. Enrollees also gain because many plans cover additional benefits and have low cost-sharing requirements.

Medicare has not taken full advantage of capitation's potential for savings, however. The program's capitation rates appear to be too high in some markets and too low in others, discouraging plan participation. Further, it appears that healthier beneficiaries are likelier than others to enroll, and the payment rates do not adequately reflect this lower risk of illness. Thus, Medicare may pay more for beneficiaries in its risk program than it would have had they stayed in the fee-for-service program.

Capitation Rates

The level of Medicare's capitation rates is tied closely to the program's traditional fee-for-service spending experience in each county. The annual growth in these rates mirrors this experience as well. Because HMOs are expected to furnish services through their provider networks more economically than Medicare does under its fee-for-service program, Medicare pays 95 percent of the estimated

30

amount it would have spent under the traditional program. Medicare retains the other 5 percent as savings. If plan payments are higher than projected plan costs (which include allowed profits), these savings are returned to enrollees in the form of additional benefits. These include, for instance, paying for services Medicare does not cover or reducing cost sharing for Medicare-covered services.

Level, Growth, and Variation—Obtaining the full potential savings from capitation requires continuous interaction between payers and plans. Those that purchase coverage can realize one-time savings by moving from higher premium fee-for-service plans to lower premium plans that accept capitation. They may enjoy ongoing savings if they can use their purchasing power to negotiate favorable premium rates. Some purchasers (other than Medicare) negotiate formally with plans; others have more informal processes for holding down annual premium increases. Some purchasers limit their premium contribution so that enrollees (who pay the difference between the premium and the employer's contribution) are more likely to choose lower priced plans.

Current law does not allow Medicare to use any of these approaches to limit the growth in capitation rates. This is true despite evidence that many plans in the risk program furnish all Medicare-covered services at costs significantly below their capitation rate. In 1994, the average Medicare capitation payment was $26 a month higher than plans' expected average costs of providing Medicare services to beneficiaries. In certain markets with the highest rates, this difference was even greater—more than $110 per enrollee per month.[1] However, in those areas without Medicare risk contracts (and there are many) rates may be too low to induce plans to participate.

Because Medicare's capitation rates are tied to fee-for-service spending experience, the program does not use information about plans' costs to set its rates in a market. Even though Medicare receives this information, it cannot negotiate lower rates in areas where the rates are higher than plan costs. At the same time, in areas where no plans participate in the Medicare program, it cannot raise capitation rates even if they are too low to cover plans' anticipated costs.

The linking of capitation rates to fee-for-service spending at the county level leads to substantial variability in the rates across areas. Further, there have been significant changes in some of these rates from year to year. This has been a particular problem in rural counties, since spending fluctuations are driven by the experience of relatively few beneficiaries. The instability of Medicare's rates over time may have dissuaded plans from participating in the risk program in certain counties, even when they serve other purchasers there.

Risk Adjustment—Voluntary choice among health plans raises the likelihood of risk selection. Plans may have a mix of enrollees whose relative risk of incurring medical expenses does not represent the group of people covered by a particular purchaser. Plans that attract beneficiaries with lower-than-average risk are less likely to experience financial losses. This can occur either through enrollee or plan action, or both. For example, some plans will pay only for services furnished by limited networks of providers. Enrollees who are healthier, and thus lack longstanding relationships with providers, may be more willing to join plans that limit provider choice, resulting in favorable selection to these plans.

If, because of risk selection, the capitation rate is too high relative to the services used by its members, the plan profits at the purchaser's expense. If it is too low, the plan loses financially. For these reasons, there has been considerable interest in developing a risk adjustment method that would allow the capitation payments to reflect more accurately differences in the likely need to use services among individuals.

The variation in patterns of health care use and spending among individuals is explained by both systematic and random risk. Systematic risk reflects expenditure variation associated with measured characteristics, such as age, sex, or chronic conditions, that are predictably related to use. Random risk is variation not associated with measured characteristics. The distinction between systematic and random risk is important, because risk adjustment methods account only for sources of systematic variation. Research suggests that about one-fifth of the variation in annual health spending is systematic, while the rest is random.[2] If this is correct, then even the best risk adjustment method would not

explain about 80 percent of the variability in health expenditures across individuals.

Available risk adjustment methods have been unable to account for much of the systematic variation. When used to predict individual annual expenditures, basic demographic adjustments (such as those used for Medicare capitation rates) explain little of the overall variation in resource use across individuals. Self-reported health status measures do slightly better. Methods that use prior claims information are among the best predictors of use, but they still account only for about one-eighth of individual variation in annual health care spending.[3]

Evidence indicates that Medicare risk plans have enjoyed favorable selection not accounted for by the program's risk adjustment method.[4] The risk adjustment method Medicare uses pays plans different amounts according to their enrollees' demographic and other characteristics (see Table 2-1). For example, the capitation rate for hospital and other facility services for an 85-year-old female eligible for both Medicare and Medicaid is twice the average capitation rate. This risk adjustment method does not account for differences in the likely need for services among beneficiaries with the same demographic characteristics.

Medicare's month-to-month disenrollment policy, intended to attract beneficiaries who otherwise would be unwilling to try a capitation arrangement, may contribute to favorable risk selection for plans. Recent evidence indicates that those who disenroll from risk plans use a disproportionate number of certain types of services after they return to the fee-for-service program.[5] This may be due to beneficiaries disenrolling from their plans to use providers or services available through fee-for-service Medicare.

Medicare may be benefiting from the rising proportion of beneficiaries in risk plans in some markets. This is because, as the risk program's share of enrollment grows, the mix of beneficiaries is more likely to reflect the general Medicare population, making risk plans less likely to experience favorable selection than they had in the past. Moreover, increases in the proportion of people enrolled in HMOs appear to influence medical practice patterns. Providers may adopt cost-conscious ways of delivering care that are encouraged by capitation even for their patients who are in fee-for-service plans.[6]

Enrollment and Plan Participation

The early years of the Medicare risk program were marked by declining plan participation and gradual growth in beneficiary enrollment (see Table 2-2). However, the number of risk contracts and program enrollment both rose in 1993, 1994, and 1995. More plans have joined the risk program as capitation has become more widespread in the employer insurance market. Increasingly, plans are competing for members and looking to Medicare as

Table 2-1. Selected Demographic Group Risk Adjustment Factors to the Medicare Capitated Risk Payment, 1995

	Female			
Age Group	Non-Medicaid Non-Working	Working Aged	Medicaid	Institutionalized
Part A				
65-69	0.55	0.30	0.85	1.50
70-74	0.70	0.40	1.10	1.80
75-79	0.85	0.50	1.40	2.05
80-84	1.05	0.70	1.65	2.05
85+	1.15	0.75	2.00	2.05
Part B				
65-69	0.70	0.35	1.05	1.50
70-74	0.85	0.50	1.15	1.65
75-79	0.95	0.70	1.25	1.65
80-84	0.95	0.75	1.25	1.65
85+	1.00	0.80	1.25	1.65

SOURCE: Health Care Financing Administration, Office of the Actuary.

Table 2-2. Medicare Risk Program Participation, 1990-1996

Year	Enrollees: Number (In Millions)	Enrollees: As a Percentage of Total Medicare Enrollment	Contracts
1990	1.2	3.5%	95
1991	1.3	3.7	85
1992	1.5	4.2	83
1993	1.7	4.7	90
1994	2.1	5.7	109
1995	2.9	7.7	154
1996	—	—	189

Note: Enrollment data are as of September each year; contract data are as of January each year.

SOURCE: Health Care Financing Administration, Office of the Actuary and Office of Managed Care.

a potential source. Further, some plans are entering markets that formerly had no Medicare risk options, thereby expanding beneficiaries' choices. Entrants to competitive Medicare markets are stimulating existing plans' marketing activities, which may attract additional enrollees.

Medicare is taking steps to expand the risk program even further. One is to distribute information about risk plans to beneficiaries. Except in some regions, Medicare has left information dissemination largely to plans, making it difficult for beneficiaries to compare their choices. The Health Care Financing Administration (HCFA), which administers the risk program, is planning a new initiative to produce comparative information on premiums and benefits offered by participating risk plans in 1996. In addition, Medicare's exclusive reliance on HMOs with a limited provider network may be preventing it from realizing the program's full potential. In 1995, HCFA developed guidelines for out-of-network provider options for Medicare contracting HMOs. The agency is also conducting a demonstration program to determine whether beneficiaries are interested in joining other types of plans.

Plan Accountability

In return for its payments, a plan provides a defined set of services to its members. This obligation is particularly important under capitation arrangements. Under fee-for-service payment methods, plans and providers usually profit when the payment and volume of services increase. Capitation, by contrast, creates incentives to limit the number and the cost of health care services. Plans that keep costs below their capitation payments retain the balance—and thus gain from lowering costs. But such an incentive creates concerns about how costs are constrained. Ideally, plans and providers will reduce services of marginal value by developing more effective and efficient modes of care. On the other hand, they could lower costs by failing to provide needed services.

Although Medicare has the authority to hold risk plans to their contractual obligations, it collects limited information on the care plans provide.[7] Most of the data relate to plans' ability to meet an array of contractual requirements and comply with policies and procedures. HCFA has been trying to update its evaluations of plans by participating in several private sector initiatives to develop plan performance measures. These include both the Foundation for Accountability and the National Committee for Quality Assurance's exploration of cost, quality, and access measures appropriate for Medicare risk enrollees.

PROPOSED CHANGES TO MEDICARE CAPITATION ARRANGEMENTS

The Congress and the Administration have developed proposals to reform the existing risk program. Both would change the payment rate setting method to generate more savings from the risk program and increase the range of plans available to beneficiaries. The Congress's proposed changes would greatly expand the types of plans that could accept Medicare capitation payments and would break the link between the capitation rates and fee-for-service spending.

The Congressional Proposal: MedicarePlus

The Congress has proposed replacing the risk program with an expanded capitation program, called MedicarePlus. This program would permit Medicare beneficiaries to select from a wider choice of health plans. Under MedicarePlus, the method for setting the capitation rate would be changed to reduce rates in areas where Medicare fee-for-service spending has been high and to increase rates where it has been low. Growth in the rates would no longer be tied to increases in spending under traditional fee-for-service Medicare.

Changes to the payment method are designed to allow MedicarePlus to produce savings for Medicare. Whether or not the savings materialize, however, total program spending (for both MedicarePlus and the traditional fee-for-service program) would be limited by the combination of the legislated rates and a budgeting tool called the "failsafe mechanism." (See Chapter 1.) This mechanism would automatically impose additional payment reductions on providers in traditional Medicare if spending exceeded preset expenditure targets.

Plan Choices—MedicarePlus would allow a broad array of managed care plans, including preferred provider organizations (PPOs), to participate. Fee-for-service plans also would be permitted. New options not widely available in the private market, such as medical savings accounts (MSAs) and provider-sponsored networks, also could be offered to beneficiaries. All MedicarePlus plans would receive a capitation payment from Medicare.

This menu of plans would give Medicare beneficiaries more choices. Conceivably, they could choose any type of plan that met Medicare standards and that was open for enrollment in their area. Plans would be granted flexibility in product design and benefits, beyond Medicare-covered services. States would have a prominent role in monitoring product offerings under MedicarePlus.

Fee-for-Service Option—The Congress's proposal defines MedicarePlus fee-for-service plans as insurers that "reimburse hospitals, physicians, and other providers on the basis of a privately determined fee schedule or other basis."[8] These plans would be required to pay non-contracting providers at least as much as the providers were paid in the traditional fee-for-service Medicare program. If these providers' fees were higher than the plan's payments, they would be permitted to bill Medicare beneficiaries for the difference.

Medical Savings Accounts—One choice in the congressional proposal would combine a high deductible insurance policy with a medical savings account. The MSA is a designated account to which Medicare would make an annual contribution and from which the beneficiary could draw for medical expenses. A beneficiary selecting this option would purchase a high deductible health insurance plan and receive the rest of his or her Medicare capitation (less the price of the plan's premium) in the form of a cash contribution to the MSA. High deductible plans would be required to cover all Medicare-approved expenses after the enrollee met a deductible of up to $6,000.[9] Beneficiaries could use MSA funds for any qualified medical expenses. They could also withdraw money from the account for non-medical spending (albeit with a tax penalty). Medicare beneficiaries in high deductible plans would not be permitted to buy insurance (other than long-term care insurance) to cover the cost of deductible expenses or additional services they might need.

MSAs are intended to make consumers bear more of the consequences of their choices to use health care services, while still offering catastrophic protection from the risk of a major expense. Supporters of MSAs believe they can lower the use of health services. They argue that if consumers had to pay the full price of medical care up to the deductible, they would make better decisions about the use of health care than they do when insurance masks the cost. A decline in the demand for medical services would drive down overall health expenditures directly by reducing utilization. Further, providers might respond to their patients' price sensitivity by constraining their prices. Since Medicare would make a fixed payment, however, any savings resulting from using fewer services—at least in the short run—would go to the beneficiary and the high deductible plan, rather than to the program.

Beneficiaries electing this option would be strongly motivated to control their medical service use if they thought of the balance in their account as savings. If they took this view, spending from the account would seem the same as other spending. On the other hand, they might regard MSA funds as an account for health services.[10] This would tend to reduce beneficiaries' restraint in purchasing health services.[11] In any case, the lack of experience with this option makes it hard to predict how Medicare beneficiaries with MSAs would behave.

Most beneficiaries who selected the Medicare MSA option probably would benefit financially. Beneficiaries who did not anticipate using health services would be attracted to this option, because they would expect to keep unspent MSA funds.

Without adequate risk adjustment to the capitation rate, healthy beneficiaries choosing the MSA option could receive more funds from Medicare than the program would have spent had they remained in the traditional fee-for-service program. If this happened, Medicare expenditures would rise, increasing the likelihood that the failsafe mechanism would be triggered. Favorable selection into the MedicarePlus MSA option could thus result in reduced payments to traditional fee-for-service Medicare providers. Favorable selection may be exacerbated by beneficiaries' ability to opt out of this option every year. Because they can anticipate at least some of their medical expenses and can delay some treatments, beneficiaries could change to more comprehensive coverage when they needed it.

Not all beneficiaries selecting the high deductible/MSA option would be able to profit from their choice. They would risk significant out-of-pocket costs in the event of high spending. The financial risks would be especially great for enrollees in high deductible plans designed as fee-for-service arrangements, because providers' charges would not be limited to the amounts established by the traditional Medicare fee-for-service program. Thus, there would be only partial stop-loss protection for the beneficiary in these types of plans.

Providers might find they would incur more bad debt from treating patients with medical savings accounts, since they would need to collect payments directly from their patients. This would be particularly likely if beneficiaries depleted their MSA funds before reaching their deductible. In this situation, beneficiaries would be required to use their own money to pay for care.

Benefits—Under the MedicarePlus program, participating plans would provide, at a minimum, services covered under traditional Medicare. These services could be furnished through a managed care provider network, and plans could employ utilization management to determine medical necessity and appropriateness.

Plans would still be allowed to return the difference between their expected payments and costs to beneficiaries in the form of additional benefits. The Congress's proposal also would allow plans to rebate this difference to beneficiaries in cash. As in the current risk program, these additional benefits could induce beneficiaries to enroll in MedicarePlus plans. Plans thus would be able to compete with one another based on benefit package and provider network, as well as on price and beneficiaries' perception of plan quality.

As they do now, plans could charge beneficiaries premiums for supplemental benefits and for the actuarial value of whatever cost sharing beneficiaries would have incurred under the fee-for-service program. MedicarePlus plans would also be permitted to charge beneficiaries for the costs of covered Medicare services when the plans' estimated costs for these exceeded their MedicarePlus capitation payments.[12]

Payments to MedicarePlus Plans—The payment system under MedicarePlus is designed to allow savings to accrue to the Medicare program because the per person payment rates would be updated by legislated rates of increase (see Figure 2-1). These rates are below those currently projected for the Medicare program. As long as MedicarePlus enrollees were as likely to use services as other beneficiaries (or the risk adjustment method fully reflected differences in risk), the MedicarePlus program would reduce Medicare expenditures (see Table 2-3). Under these circumstances, savings from this component of Medicare would be driven by the number of beneficiaries

Figure 2-1. MedicarePlus National Average Growth Percentages, 1996-2002

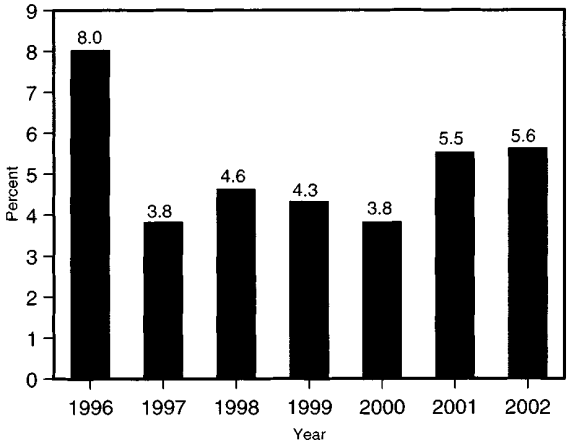

Note: For all subsequent years the update is 5.0 percent.

SOURCE: H.R. 2491.

Table 2-3. Estimated MedicarePlus Enrollment, Savings, and Costs, 1996-2002

Year	MedicarePlus Enrollment (In Millions)	Percentage of Total Medicare Enrollment	Savings From Non-MSA Plans[a] (In Billions)	High Deductible/ MSA Costs[b] (In Billions)	Total Savings (In Billions)
1996	3.0	8.0%	$ -0.1	$0.0	$ -0.1
1997	3.8	10.0	-1.0	0.5	-0.5
1998	6.8	17.5	-1.8	0.6	-1.2
1999	7.7	19.5	-3.3	0.7	-2.6
2000	8.5	21.3	-5.8	0.8	-5.0
2001	9.3	23.2	-8.2	0.9	-7.3
2002	10.3	25.3	-11.3	1.1	-10.2
1996-2002	—	—	-31.4	4.6	-26.9

Note: The Congressional Budget Office constructed the capitation rates used in these estimates with Part A enrollment only. All capitation rates are expressed in calendar years. Numbers may not sum to total due to rounding. MSA = medical savings account.

[a] Reflects savings from beneficiaries enrolled in non-MSA arrangements, including risk contractors.

[b] The capitation rates and costs for new enrollees in high deductible/MSA plans reflect assumptions that these enrollees would be relatively young and would receive lower age-adjusted payments.

SOURCE: Congressional Budget Office.

who joined MedicarePlus plans. But if MedicarePlus experienced favorable selection (and risk adjustment did not correct for this), actual savings would be smaller than anticipated. Estimated savings from the MedicarePlus program would be somewhat reduced by anticipated costs due to enrollees in MedicarePlus high deductible/MSA arrangements. Regardless of the MedicarePlus enrollment or risk selection experience, however, overall Medicare spending targets would be achieved because of the failsafe budget mechanism.

Capitation rates under MedicarePlus would vary less across geographic areas than do rates in the current risk program. County rates would be blended with national ones, going up or down depending on the area's payment experience. Payment rate floors would further raise payments in areas where costs were especially low. Both the legislated updates and the blending would, in effect, uncouple the capitation amount from spending in traditional Medicare.

The MedicarePlus base payment rate would be the 1995 payment rates for risk plans in the existing program. Thus, the base rates would incorporate the geographic variation in service use patterns and health care prices as reflected in the 1995 rates. Each year, the Secretary of Health and Human Services would update these county-specific base rates using the legislated update factor for that year. Then, the Secretary would calculate the national rate, which would be the average of all updated county rates weighted by the proportion of Medicare beneficiaries in each county.

The capitation rate for each county would be a blend of its own and the national rate. In 1996, 90 percent of payment would be the county rate. The national rate, adjusted for input price levels in that county, would account for the other 10 percent. Beginning in 1998, the blend proportion would be changed by 5 percentage points each year until the national rate made up 30 percent of the total. Finally, each county's blended rate would be compared with two payment rate floors. In 1996, each county's payment rate would be the highest of its blended rate, $300, or 102 percent of the previous year's rate.

Blending the county with the national rate would reduce payments in areas with higher fee-for-service utilization and payments and boost payment rates in areas where use of services is lower. Plans could pass these gains to beneficiaries by providing additional benefits or cash rebates, or could retain them internally. Such flexibility could translate into increased plan participation and higher enrollment in areas where service use is lower. This payment method also would have the advantage of limiting the volatility of the rates, because the local and national components of the blend would be updated by a fixed national rate of increase specified in the law. Increases in payment rates in some areas,

however, would result in higher outlays under the MedicarePlus program than would be the case under the current payment system.

Risk Adjustment—The congressional proposal does not require the Secretary to modify Medicare's existing risk adjustment methodology, although the Secretary would have the authority to do so. Medicare's inadequate risk adjustment method would fail to account for risk selection differences among MedicarePlus plans. Nor would it fully reflect variation in use between those who enrolled in MedicarePlus and those who did not.

The limitations of the current risk adjustment method also have implications for spending in the traditional fee-for-service program. Suppose that a disproportionate number of healthier beneficiares joined MedicarePlus, leaving the sicker and frailer in traditional Medicare. Then, fee-for-service spending per beneficiary would be higher, increasing any payment reductions in traditional Medicare required by the failsafe mechanism.

Enrollment and Disenrollment—MedicarePlus would discontinue month-to-month enrollment and disenrollment after a transition period. For each county, this period would start when the first plan was available for enrollment and end in October 1997. After this date, beneficiaries choosing to enroll in MedicarePlus would be locked into their plan for a year. They would still be able to drop out of a plan within 90 days of initial enrollment, or if they moved out of the plan's service area, or if the plan were found guilty of misconduct. Annual enrollment periods with a one-year lock-in provision could reduce favorable risk selection in MedicarePlus plans, increasing total savings and lowering the likelihood of payment reductions under the failsafe mechanism.

Beneficiaries generally would select MedicarePlus plans during annual open enrollment periods. The Congress's proposal would require the Secretary to conduct a coordinated information dissemination campaign before each open enrollment period. This could spur enrollment as beneficiaries learned about the MedicarePlus choices. On the other hand, eliminating the monthly disenrollment option might discourage reluctant beneficiaries from trying a MedicarePlus plan.

Accountability—The congressional proposal would strengthen current reporting standards and improve plan accountability by adding data reporting requirements similar to those that private purchasers impose. Beneficiaries would receive better information to compare MedicarePlus plans with each other and with the traditional program. Plans would report more specific information on factors that affect quality. An electronic data set would be established to provide uniform information on all participating plans. Many of the proposed requirements already exist in regulation. The proposal would strengthen these standards by putting them in statutory language, and would require more specific information to improve health plan accountability.

The Administration's Proposal

The President also has proposed expanding the risk program, but the changes would be less comprehensive than those the Congress has envisioned under MedicarePlus.[13] Beneficiaries would be able to enroll in qualified PPOs and provider-sponsored organizations as well as HMOs. Most enrollees would be able to join one of these plans only during annual open enrollment periods. Private fee-for-service plans and high deductible plans combined with MSAs would not be among the available options. As an alternative to the full capitation payment, the Secretary would have the authority to pay plans using a partial capitation approach.

As in the existing risk program, participating plans would be required to cover, at a minimum, Medicare-covered services. Plans would have to demonstrate that the benefits they were providing, together with the premiums charged to enrollees, were at least actuarially equivalent to the benefits in the traditional Medicare program. Additional benefits offered by plans would have to conform to one of the standardized benefit packages the Secretary would design. Standardization would help beneficiaries evaluate price and benefit differences among plans.

The Administration's proposal addresses some shortcomings of the capitation rates in the current Medicare risk program. The proposal would limit variation in Part B payment rates (which cover physician services, medical supplies, and other outpatient treatment) across counties by raising those

that are low and capping those that have been inflated by high service use rates in the fee-for-service program. The annual growth in the rates, however, would continue to be linked to that in the fee-for-service program.

Other modifications would make the capitation rates more reflective of actual plan costs. Because fee-for-service claims are used to calculate Medicare's capitation rates, the rates include hospital payments for graduate medical education and for treating a disproportionate share of low-income patients. Plans that receive capitation payments may not incur such costs. The proposal would reduce capitation amounts to reflect these hospital payments, and Medicare would retain 25 percent of the amount saved. The rest would be distributed to both Medicare risk plans that contracted with academic medical centers and the academic medical centers themselves. This change in methodology would reduce the variation in the rates, since areas where beneficiaries in fee-for-service Medicare use teaching and disproportionate share hospitals generally have higher capitation rates.

A partial capitation approach would also be introduced. Plans would be paid using fee-for-service methods, but the amounts would be lowered 5 percent on each claim. At the end of the year, plans' per person payments would be compared with the capitation rate. Plans that had kept their spending below the targets would be rewarded with additional payments; those that had exceeded the targets would be required to return some of the excess to Medicare.

In the Administration's proposal, beneficiaries could enroll in plans under three circumstances only: during an annual open enrollment period, when they first became eligible for Medicare coverage, or when their plan opted out of Medicare. Beneficiaries could continue to disenroll from plans on a monthly basis. The Secretary would be directed to distribute comparative plan information to beneficiaries.

CONCLUSIONS AND RECOMMENDATIONS

Both the Congress and the Administration have proposed changes to Medicare's capitation program to address some of its shortcomings. The Congress would go further in expanding beneficiary choices and modifying the payment method. In addition, it would create a link between the capitation program savings and payment rates in Medicare's traditional fee-for-service program through the failsafe budget mechanism. This chapter concludes with ProPAC's recommendations for improving Medicare's risk program as well as the Congress's and the Administration's proposals to change it.

Recommendation 3: Expanding Medicare's Capitation Program

The Commission supports reforming the Medicare capitation program to control spending while expanding beneficiary choice.

The Congress and the President have proposed ways to expand the role of capitation under Medicare. Capitation contains incentives for plans to control the cost and volume of the services they furnish. Further, such methods limit Medicare outlays to the per capita amounts.

Medicare beneficiaries should have a wider range of health plan options. Under the current program, beneficiary choice is largely limited to the traditional fee-for-service program and, where available, an HMO option. Additional alternatives would let Medicare beneficiaries choose the type of plan that best meets their needs and would permit new beneficiaries enrolled in a particular type of plan before retirement to stay in that arrangement. In addition, more alternatives could increase plan competition for Medicare beneficiaries on the basis of additional benefits and quality.

Recommendation 4: Setting and Updating the Capitation Rates

Geographic variation in the capitation rates and the volatility of the rates from year to year should be reduced. The Secretary should develop and test alternative payment methods that would allow the payment rates to reflect changes in local market conditions.

Medicare sets a capitation rate for each county based on its historical spending for resident beneficiaries in the traditional Medicare fee-for-service

program. The direct linkage to fee-for-service spending patterns in narrowly defined payment areas has led to substantial variability in the payment rates among counties and excessive annual changes in the rates for many areas. Private plans have been discouraged from participating in the risk program in areas with low capitation rates, as well as in those that have experienced high rate volatility. At the same time, risk plans located in counties with high capitation rates often have been paid substantially more than their actual costs of providing basic program benefits to Medicare beneficiaries. Further, since changes in rates and in local fee-for-service spending are linked, the Medicare risk program generally has not achieved the cost savings attained by private health plans.

The Congress proposes to reduce the geographic variability of the rates. It would do so by blending the local historical fee-for-service spending experience with the input price-adjusted national average and by setting payment rate floors. The annual volatility of the payment rates would be lowered by updating them with legislated growth factors. The President's proposal would decrease variability by removing special payments from the rates and by setting ceilings and floors on a portion of the payment rates. The President's proposal would have only a limited impact on volatility in the rates over time.

Neither proposal would allow the rates to vary with changes in the costs faced by plans. ProPAC believes alternative payment methods should be developed and tested that would better reflect the evolution and impact of market forces in each area. To accomplish this, information would have to be collected on the cost performance of individual plans to enhance the Secretary's understanding of markets and lay the foundation for implementing alternative payment methods, such as competitive bidding. The Commission wishes to emphasize that these data are not intended to support restricting plan profits or other regulatory activities.

Recommendation 5: Improving Risk Adjustment Methods

The risk adjustment methods used to set Medicare capitation payments should better reflect variation in the likely use of services. Even as research on the development of new methods continues, the Secretary should implement interim improvements as soon as possible.

Effective risk adjustment of payments to health plans participating in the Medicare program is crucial to prevent rewarding or penalizing plans unwarrantably. It is equally essential to ensure that the financial burden of caring for Medicare beneficiaries is allocated fairly between the capitation program and the traditional fee-for-service program. These issues will become even more important if the risk program is modified to expand beneficiaries' choices among plans and plan participation.

The current knowledge base is not adequate to support highly effective risk adjustment methods. Moreover, health risks and the variations in propensity to use health services may never be sufficiently understood to adjust fully for differences in expected spending among individuals. Nevertheless, the methods used in the Medicare risk program could be improved. For example, information about the presence of specific chronic conditions, such as certain types of cancer or heart disease, enhances predictions about future health care spending levels for individuals. The Secretary should implement marginal improvements rather than wait for potentially better methods that may not be developed for many years.

While continuing to support further research on risk adjustment methods, the Secretary should also evaluate other features of capitation program design that may contribute to the risk selection problem. Enrollment and disenrollment policies, for example, may further concentrate particular groups of beneficiaries in the capitation program or in certain plans. Other policies regarding reinsurance or partial capitation may protect plans from adverse selection. Given the likelihood of continuing limitations in risk adjustment methods, these kinds of policies may be especially important as a source of auxiliary protection against the impact of risk selection.

Recommendation 6: Medical Savings Accounts

The Congress's high deductible/MSA option would provide an additional choice for Medicare enrollees. ProPAC is concerned,

however, that the current Medicare risk adjustment method is not sufficient to protect the program from adverse selection and resulting excess spending. The likelihood that rates would better reflect risk would be enhanced if Medicare enrollees were required to remain in the MSA option at least for several years.

Medicare payments for beneficiaries choosing the high deductible/MSA option proposed by the Congress could be higher than the costs that would have been incurred if those beneficiaries had remained in the traditional program. This is particularly likely if risk adjustment methods are not improved or if longer participation requirements are not imposed. In fact, the Congressional Budget Office estimates that beneficiaries in this type of arrangement would cost the program $4.6 billion between 1996 and 2002. These costs could trigger the failsafe mechanism in traditional Medicare.

The Secretary should move quickly to improve the risk adjustment method. In addition, further research on the high deductible/MSA option is needed to assess the effects of various plan designs and to improve this option over time. Issues requiring a closer look include the amount deposited in the MSA, the length of time before disenrollment is allowed, and the features of the high deductible plan.

Recommendation 7: The MedicarePlus Fee-for-Service Option

Enrollees choosing the fee-for-service option under the proposed MedicarePlus program could be responsible for substantially higher fees than what their plans would pay. The Secretary should monitor the impact of this option on beneficiary liability and on possible reductions in physician and other provider participation in traditional Medicare.

Current policies limit the amount that most providers can bill Medicare beneficiaries above Medicare's payment. ProPAC is concerned that beneficiaries who choose the MedicarePlus fee-for-service option will be subjected to unanticipated out-of-pocket liabilities. The Commission also is concerned about provider behavior resulting from these arrangements: Some providers may decide not to see those with traditional Medicare coverage by limiting their practice to patients who can pay high charges. This phenomenon could limit access of Medicare beneficiaries—particularly those with low incomes.

Recommendation 8: Information for Beneficiary Health Plan Choices

Medicare should make available to beneficiaries information about the performance of plans and local providers. The Secretary should identify the information beneficiaries need to make appropriate choices and develop innovative ways to improve access to it.

The risk contracting program distributes only limited information to beneficiaries about plans. Soon, however, HCFA will expand the data it distributes to include plans' benefits and premiums. The Secretary should continue efforts to identify the information beneficiaries need to make informed health plan choices and the most appropriate format for it. This is even more critical as health plan choices are expanded for Medicare beneficiaries. The Secretary should explore initiatives that would, for example, measure the satisfaction of beneficiaries who used services, describe total benefits available in an area (including those covered under insurance policies offered as supplements to Medicare), and document performance of individual providers within a plan.

As the number of choices under Medicare increases either through the current program or expansions, private entities likely will begin distributing information about these choices to beneficiaries. Although this is appropriate, Medicare should not abandon its responsibility to ensure that beneficiaries receive unbiased, comparable, and reliable data.

Recommendation 9: Health Plan Accountability

Medicare must hold health plans accountable for the appropriate use of Medicare funds. In addition, standards must be developed and enforced to ensure that Medicare beneficiaries will receive services of appropriate quality.

40

Under capitation, a health plan arranges with providers for coverage of services. Health plans have an incentive to limit the types and number of services delivered to each member when they receive a capitation payment. As a purchaser, therefore, Medicare needs to be particularly vigilant in ensuring that plans meet their contractual obligations to provide appropriate care.

The Commission recognizes that HCFA is working with the private sector to develop measures of health plan performance. These relate to patient satisfaction, plans' financial stability, and other factors. Efforts to date have shown promise, but they still have not succeeded in providing definitive information on service use or health outcomes. Ideally, Medicare should be able to evaluate plan performance through risk-adjusted outcomes measures. Additional resources most likely will be necessary to implement an evaluation program that incorporates these measures.

Notes to Chapter 2

1. Prospective Payment Assessment Commission and Physician Payment Review Commission, *Joint Report to the Congress on Medicare Managed Care* (Washington, DC: ProPAC and PPRC, 1995).

2. Joseph Newhouse and others, "Adjusting Capitation Rates Using Objective Health Measures and Prior Utilization," *Health Care Financing Review* 10(3): 41-54, Spring 1989.

3. Several studies have examined claims-based risk adjustment systems, which include ambulatory care groups (ACGs) and diagnostic cost groups (DCGs). ACGs classify claims based on diagnoses in ambulatory settings, or all settings combined, as well as age and other factors. DCGs classify by diagnosis and other variables from previous hospital inpatient stays.

4. Randall Brown and others, *The Medicare Risk Program for HMOs—Final Summary Report on Findings from the Evaluation* (Princeton, NJ: Mathematica Policy Research, February 18, 1993).

5. Physician Payment Review Commission, "Biased Selection and Medicare HMOs: Analysis of the 1989-1994 Experience," unpublished paper, December 1995.

6. Prospective Payment Assessment Commission, "Relationship Between AAPCC Payments and Medicare Risk Plan Costs," unpublished paper, April 1995.

7. General Accounting Office, *Medicare: Increased HMO Oversight Could Improve Quality and Access to Care* (Washington, DC: GAO, August 1995).

8. H.R. 2491, Title 8, Subtitle A, Section 8001.

9. Costs for Medicare-covered services would have to count toward the deductible. Plans would have the discretion to count supplemental services toward the deductible or cover them once the deductible was reached.

10. American Academy of Actuaries, *Medical Savings Accounts: Cost Implications and Design Issues*, Public Policy Monograph #1 (Washington, DC: American Academy of Actuaries, May 1995).

11. Joseph White, "Medical Savings Accounts: Fact vs. Fiction" (Washington, DC: Brookings Institution Occasional Papers).

12. This policy reflects a clarification to the language in H.R. 2491, which was ambiguous on this issue.

13. This description reflects the proposal released in December 1995. The President subsequently may have changed this proposal.

Chapter 3

Acute Care Hospital Payments

Although both the Congress and the President propose to expand Medicare's use of capitation, most beneficiaries will likely remain in the traditional fee-for-service program for the foreseeable future. Based on this expectation, most of the proposed Medicare savings under either plan would be obtained through changes to the fee-for-service program. The majority of these savings would come from payments to acute care hospitals, including those paid under the prospective payment system (PPS) and those excluded from PPS.[1]

Since its inception, the Prospective Payment Assessment Commission (ProPAC) has provided the Congress with recommendations on PPS payment updates, the structure of other PPS payment components, and the cost limits for PPS-excluded facilities. In fulfilling this responsibility, ProPAC considers the overall level of Medicare expenditures, the equity of payments across hospitals, and the adequacy of payments for ensuring appropriate quality of care. To support its decision making, the Commission examines not only hospitals' Medicare costs, payments, and margins for inpatient services, but also total margins and other indicators that reflect the larger environment in which hospitals operate. This information is used to develop ProPAC's recommendations, to evaluate the impact of payment policy changes, and to assess the need for further policy improvements. The data from recent years indicate that the hospital industry is changing in response to the incentives of PPS and the financial pressures imposed by other payers.

After nearly a decade of annual increases averaging around 9 percent per year, the growth in PPS operating costs per discharge began to moderate in the early 1990s. In 1992, the ninth year of PPS, the increase was down to 4.9 percent, and preliminary data for 1994 show that PPS costs per discharge actually decreased for the first time (see Figure 3-1). This 0.5 percent decline is more than 3 percentage points below the growth rate of the market basket index, which reflects the prices of goods and services that hospitals purchase.

Figure 3-1. Annual Change in Medicare Operating Costs Per Discharge, First 11 Years of PPS (In Percent)

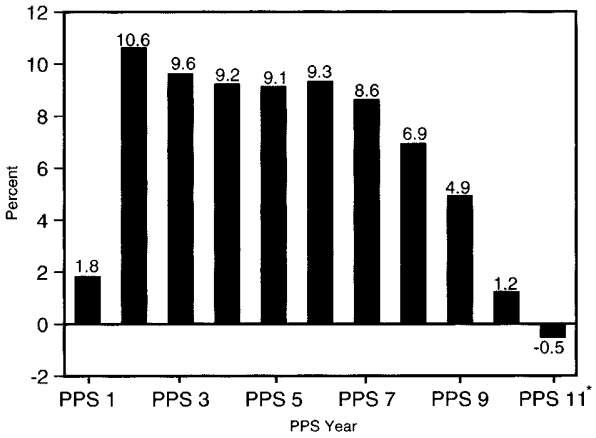

* Based on preliminary data and subject to revision

SOURCE: ProPAC analysis of Medicare Cost Report data from the Health Care Financing Administration.

The reduction in per unit cost growth in recent years has been much greater for inpatient care than for other hospital services like outpatient and skilled nursing care, due primarily to declines in length of stay. Moreover, the drop in length of stay has been steeper for aged patients (who make up the vast majority of the Medicare population) than for the non-aged—18 percent compared to 13 percent since 1989. The rapid fall of Medicare length of stay may partially reflect a trend toward discharging some patients to post-acute settings earlier in the course of their treatment, representing a change in the hospital product. This has led to concern about how Medicare pays for patients who are discharged from PPS hospitals to inpatient post-acute care providers.

The substantial drop in hospital cost growth commonly is attributed to payers' resistance to continuing escalation in their payments. For a number of years, payment pressure was applied primarily by

46

Medicare and to some extent Medicaid. From the second through the eighth PPS years, the annual increase in Medicare payments per case was less than the corresponding per case cost increase, which resulted in steadily declining PPS margins (see Figure 3-2).[2]

During this period, hospitals generally were able to obtain the revenue they needed to cover additional losses from treating Medicare patients by cost shifting to private insurers.[3] This was accomplished by obtaining payment increases from private payers that exceeded the corresponding cost increases. As a result, the average payment to cost ratio for private payers went from 116 percent in 1986 to 131 percent in 1992.[4] Primarily because of cost shifting, hospitals were able to maintain fairly stable total margins, which reflect gains and losses from all payers as well as from non-patient care activities. Although the total margin for all community hospitals dipped by nearly a percentage point between the third and fourth years, it was back at 4.3 percent by the eighth year of PPS (see Figure 3-3).

In the early 1990s, more private insurers began to actively limit their payments to hospitals, and the combined pressure from public and private payers appears to have had a dramatic effect. In 1992, the ninth year of PPS, the Medicare per case cost and payment increases were the same. Over the next two years, despite payment increases as low as at any time since PPS began, cost increases that were even lower resulted in rising PPS margins.

Figure 3-2. PPS Margins for All Hospitals, First 11 Years of PPS (In Percent)

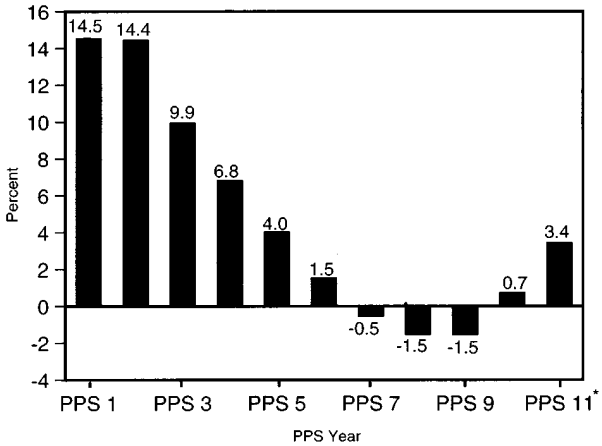

* Based on preliminary data and subject to revision

SOURCE: ProPAC analysis of Medicare Cost Report data from the Health Care Financing Administration.

Figure 3-3. Total Margins for All Hospitals, First 11 Years of PPS (In Percent)

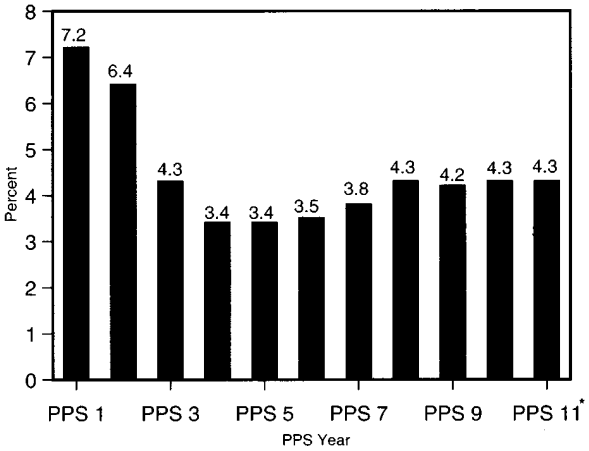

* Based on preliminary data and subject to revision

SOURCE: ProPAC analysis of Medicare Cost Report data from the Health Care Financing Administration.

During this period, Medicaid and uncompensated care losses stayed relatively stable. Consequently, hospitals were able to absorb smaller payment increases from private insurers without experiencing deterioration in overall financial status. The payment to cost ratio for private payers declined from its peak of 131 percent to 124 percent in 1994, while total margins remained virtually constant.

These trends portray a hospital industry adapting to an increasingly competitive environment. This has implications for how hospitals operate, how they interact with other types of facilities, and how accessible services are for Medicare beneficiaries and other populations. In the context of these changes, ProPAC presents the following discussion of payment issues and recommendations for improving Medicare policies.

The chapter begins by examining several payment update issues. Next, payments for teaching hospitals and facilities that treat low-income patients are addressed, followed by payments for discharges from PPS hospitals to inpatient post-acute providers. The chapter concludes with Commission recommendations in each of these areas.

All the payment components discussed are associated with provisions of the congressional or presidential proposals designed to reduce projected Medicare expenditures.

PAYMENT UPDATES

The Prospective Payment Assessment Commission is mandated by law to report to the Congress on the appropriate update to inpatient hospital payment rates under Medicare's PPS. In this section, the Commission discusses its views on updates to the PPS operating rates, PPS capital rates, and payments for PPS-excluded hospitals and units.

PPS Operating Rates

In developing and presenting its annual update recommendation for PPS operating rates, ProPAC uses a consistent framework to evaluate the likely impact of various factors that may affect hospital costs. These factors include hospital input price inflation, scientific and technological advances, productivity improvements, and changes in patient complexity. The Commission also looks at the potential impact of its decision on access and quality of care. The update recommendation traditionally has been for one year and for a specific rate of increase.

The Congress has proposed to set annual updates to PPS payment rates for fiscal years 1997 through 2002 at the market basket rate of increase minus 2.0 percentage points. By contrast, the President would set these increases at market basket minus 1.0 percentage points in fiscal years 1997 through 2000, and at market basket minus 1.5 percentage points in fiscal years 2001 and 2002. Recent experience suggests that actual per case payments will go up an additional percentage point each year due to changing patient acuity as measured by the case-mix index.

The Commission's update framework provides a foundation for evaluating these proposed updates. The framework begins with a forecast of hospital input price inflation in the coming year. This is based on a projection of the PPS hospital market basket index, which measures changes in the prices of a fixed basket of goods and services hospitals use as inputs to provide inpatient care. The market basket is also the basis for the annual hospital payment updates set by the Congress. The most recent forecast of the market basket is an increase of 2.9 percent in fiscal year 1997, and slightly higher growth rates in later years.

The Commission's update framework also includes two adjustments related to the market basket. The first reflects differences between ProPAC and the Health Care Financing Administration (HCFA) in the construction of the index. ProPAC believes the index should equally reflect hospital industry wages and benefits and those in the economy as a whole. This requires giving more weight to the industry price proxies and less to general wages and benefits than HCFA does. Even so, the current forecasts for fiscal year 1997 yield the same result, 2.9 percent. If hospital wages and benefits continue to grow more slowly than compensation in the general economy—as they have recently—then future forecasts of ProPAC's market basket may be less than HCFA's.

The second adjustment is needed because the market basket forecast is subject to error. The Commission believes substantial forecast errors should be corrected when the actual market basket increase becomes available. The fiscal year 1995 payment rates were updated based on a market basket forecast of 3.6 percent. The actual increase, however, was 3.0 percent. This resulted in payment rates that were 0.6 percentage points too high, and this discrepency should be removed in this year's update calculation. For the past few years, forecast errors have resulted in overstated payment rates, requiring later downward adjustments. This trend may last for another year or so. However, because the latest long-range market basket estimates are so low, future forecast errors might require a positive adjustment, especially if there is a resurgence of inflation.

The adjustment for scientific and technological advances is a future-oriented policy target intended to provide additional funds for hospitals to adopt quality-enhancing, cost-increasing health care innovations. The Commission has included adjustments ranging from 0.3 to 1.0 percentage points in past update recommendations. The current range likely is lower because there is little evidence of significant new cost-increasing advances ready for implementation. Moreover, the cost-competitive environment this industry now faces may dampen

48

the adoption of new technologies as hospitals closely evaluate their relative costs and benefits. A reasonable range for the increase in operating costs due to scientific and technological advances in 1997 is 0.1 to 0.6 percentage points. There is uncertainty about the appropriateness of this range for future years, however.

The productivity adjustment, also a future-oriented policy target, is intended to give hospitals an incentive to improve productivity. ProPAC generally expects hospitals to achieve productivity gains similar to those seen in the general economy. In the past, the Commission has expected productivity growth of anywhere from 0.5 percent to 2.0 percent per year. The adjustment in the update framework is intended to share productivity savings equally between hospitals and Medicare. The productivity adjustment thus has ranged from −0.3 to −1.0 percentage points. The near future might see even greater productivity improvements, as hospitals strive to stay competitive and financially viable. ProPAC's latest estimates indicate that hospital productivity increased as much as 2.3 percent in 1994. Given this improvement, a productivity adjustment in the range of −0.7 to −1.2 percentage points would be reasonable in fiscal year 1997.

Some of the apparent productivity improvements that have been observed may be due to hospitals shifting care traditionally provided in the hospital to other settings, such as skilled nursing facilities and rehabilitation hospitals and units. This site-of-care shift results in lower per case hospital costs, but not lower PPS payments. The update should reflect this site-of-care shift, which represents a change in the hospital product.

The final component in the Commission's traditional update framework is the case-mix adjustment. Under PPS, hospital payments go up automatically with increases in the case-mix index. But the case-mix index measures both real growth in patient complexity and growth due to coding improvements that are not associated with greater patient complexity. On the other hand, the index does not capture case-complexity changes within diagnosis-related groups (DRGs). Payment should reflect only real changes in patient complexity, in ProPAC's view. The case-mix adjustment in the update framework allows payments to reflect both real across-DRG case-mix change and real within-DRG case-complexity change.

During the first few years of PPS, the national average case-mix index went up substantially, both because hospitals were coding more accurately and because patient complexity was increasing. This growth resulted in the need for rather large case-mix adjustments in the Commission's update framework, ranging from −0.7 to −1.0 percentage points. More recently, though, growth in the case-mix index has slowed, as hospitals' ability to improve their coding has diminished. This has led to smaller adjustments for case-mix change in the update framework over the past few years, ranging from −0.2 to 0.0 percentage points. The net effect of the case-mix adjustment on future updates is likely to remain small unless the DRGs are substantially revised.

Based on ProPAC's update framework, a payment update between market basket minus 2.0 and market basket minus 0.7 percentage points would be appropriate to compensate hospitals for expected cost growth for fiscal year 1997 (see Table 3-1). Moreover, substantial changes in health care financing and delivery in recent years should also be considered in setting an appropriate update. Hospitals face a more competitive environment as they vie for managed care contracts and patients. Further, private payers increasingly have resisted cost shifting, forcing hospitals to contain their costs to avoid deterioration in total margins. They have responded by holding their per case cost growth below the market basket increase. As a result, the aggregate PPS margin has increased and is now well above zero.

As a prudent purchaser, Medicare should respond to these changes by holding its price increases down and thereby sharing in the apparent productivity improvements hospitals are achieving. ProPAC's examination of the available data indicates Medicare should be able to keep its per case payment increase for PPS hospitals down to the market basket increase minus 2.0 percentage points for the next year or two without undue effects on the industry. After years of cost growth well above inflation, there should be substantial room for hospitals and the health care industry to generate lower rates of cost growth.

The Congress, however, proposes updates of market basket minus 2.0 percentage points for fiscal years 1997 through 2002. Maintaining such

Table 3-1. Update Framework for PPS Hospital Operating Payments, Fiscal Year 1997

Components of the update	
Fiscal year 1997 HCFA PPS market basket forecast	MB[a]
Adjustment for difference between HCFA and ProPAC market baskets	-0.1 to 0.0
Correction for fiscal year 1995 forecast error	-0.6
Allowance for scientific and technological advances	0.1 to 0.6
Adjustment for productivity	-1.2 to -0.7
Adjustments for case-mix change (fiscal year 1996)	
Total DRG case-mix index change	-1.0 to -0.9
Real across-DRG case-mix change	0.8 to 0.9
Within-DRG case-complexity change	0.0 to 0.2
Net adjustment for case-mix change	-0.2 to 0.0[b]
Total PPS operating update	MB -2.0 to MB -0.7

Note: MB = market basket.

[a] The most recent market basket forecast should be used to set the PPS update, which for fiscal year 1997 is 2.9 percent. This market basket forecast was provided by the Health Care Financing Administration, Office of the Actuary, December 1995.

[b] The range for the net adjustment for case-mix change does not reflect the sum of the three case-mix change components, but rather was developed in consideration of those values.

updates throughout this period could have a severe impact on hospitals. The required restraint on cost growth may not be feasible or desirable. Low updates over an extended period could affect hospitals' financial health and compromise access and quality of care. They also could impede the diffusion of quality-enhancing technological advances.

PPS Capital Payment Rates

Since fiscal year 1992, Medicare has paid for its share of hospital capital costs, which consist primarily of interest and depreciation, using prospective per case rates. During a 10-year transition period ending in 2001, payments are based on a blend of hospital-specific rates and a single Federal rate.

Initially, the base Federal payment rate was set equal to the 1989 national average Medicare-allowable capital cost per discharge updated to 1992. Similarly, each facility's hospital-specific payment rate was its 1989 cost per discharge updated to 1992. From 1992 through 1995, HCFA updated base payment rates using a moving average of capital cost increases in previous years. During this period, however, the Congress required HCFA to adjust the payment rates in each year so that anticipated aggregate capital payments would equal 90 percent of anticipated aggregate costs. This budget neutrality requirement meant that the effective payment rate was below the updated base payment rate in each year, with a growing discrepancy between the two. The expiration of budget neutrality at the end of September 1995 resulted in a 20.6 percent increase in the Federal capital payment rate for fiscal year 1996.

The congressional proposal would not alter the system for updating capital payment rates. However, it would continue the budget neutrality requirement through 2002 and lower payments to 85 percent of anticipated costs in each year. Thus, year-to-year increases in the effective capital payment rate would continue to be tied to changes in anticipated capital costs. Both the President and the Congress would reduce the Federal rate by 7.47 percent and the hospital-specific rates by 8.27 percent. These changes reflect information from hospitals' Medicare Cost Reports indicating that the 1992 base rates were overstated because the projection for cost growth between 1989 and 1992 was inaccurate.

ProPAC has recommended an alternative approach. An update framework, such as that developed by the Commission, would be applied to an appropriate base payment rate to determine the rate for the coming year. This would be similar to the method used to update PPS operating payment

50

rates and would finally break the link between aggregate capital costs and payments.

There are several ways to determine an appropriate base capital payment rate. For example, the 1995 effective rates—the prevailing payment amounts at that time—could be used as a base for future years. Hospitals have received these rates as capital reimbursement for the care of Medicare beneficiaries and appear not to have been adversely affected. Another method would be to rebase the 1992 capital payment rates as HCFA has suggested and update them to the current year using an analytic framework.

The ProPAC capital update framework is similar to the operating update framework described earlier. It includes factors for capital asset price changes (the capital market basket), forecast error correction, scientific and technological advances, productivity, and case-mix change. Some of these components have different values when applied to capital. ProPAC's framework also includes a discretionary financing policy adjustment for use in extended periods of unusually high or low interest rates. The application of such an update to an appropriate base payment rate would be part of a prospective payment system that provides incentives to hold costs down while recognizing the factors that determine capital cost increases for efficient hospitals.

Payments to PPS-Excluded Hospitals and Distinct-Part Units

Five types of hospitals (rehabilitation, psychiatric, long-term care, children's, and cancer) and two types of distinct-part units in general hospitals (rehabilitation and psychiatric) are exempt from PPS. These providers are excluded primarily because DRGs fail to predict their resource costs accurately.

PPS-excluded hospitals and distinct-part units are subject to the payment limitations and incentives established in the Tax Equity and Fiscal Responsibility Act of 1982 (TEFRA). Each provider is paid on the basis of its current Medicare-allowable inpatient operating costs per discharge relative to a target amount. Each provider's target amount is its allowable costs per discharge in a base year, trended to the current year by an annual update factor. Medicare's share of allowable capital costs is paid in its entirety.

Under TEFRA, a facility with Medicare-allowable inpatient operating costs that are below its ceiling (its target amount times the number of Medicare discharges) receives its costs plus an incentive payment. This payment is equal to half the difference between its costs and ceiling or 5 percent of the ceiling, whichever is less. A facility with inpatient operating costs above its ceiling receives its ceiling plus half the difference between its ceiling and costs. Payments may not exceed 110 percent of the ceiling, however. Further, TEFRA provides an exceptions process whereby facilities may receive payment adjustments if their costs are unusually high due to extraordinary circumstances.

The update to the target amounts is set prospectively by statute. Under current law, facility-specific updates range from the forecast increase in the PPS-excluded market basket to the market basket increase minus 1.0 percentage points through fiscal year 1997. Facilities that had higher costs relative to their target amounts in fiscal year 1990 receive higher updates. In 1998 and beyond, all facilities would receive the full market basket increase.

The Congress initially excluded these hospitals and distinct-part units from PPS with the understanding that a separate prospective payment system would be applied at a later date. Such a system has not been implemented primarily because appropriate patient classification systems have not yet been developed.[5] Nevertheless, interest in revising Medicare's payment system for these facilities persists owing to widespread concern about the long-term applicability of TEFRA.[6] A major issue relates to payment disparities between new and old providers.

The use of historical costs to set target amounts systematically rewards providers that had relatively high base year costs. To the extent that these facilities restrain cost increases or lower their costs in subsequent years, they benefit by receiving incentive payments. By contrast, providers that had relatively low base year costs are penalized by having a low target amount. These facilities are less likely to benefit from incentive payments because they may be less able to realize additional efficiency gains in later years. Accordingly, the financial outcome for

the latter group becomes heavily dependent on the annual update to the target amount. The update also does not reflect certain factors that affect facility costs, such as changes in case mix or treatment patterns. Hence, target amounts are less likely to reflect the reasonable costs of providing services over time. Providers that have been subject to TEFRA longer, therefore, may be disadvantaged relative to new ones entering the market.

Recent ProPAC analyses suggest that, in aggregate, rehabilitation hospitals and distinct-part units have done well financially under TEFRA. For most other excluded facility types, though, aggregate operating payments are at or below aggregate operating costs. Further, substantial variation in the extent to which facilities' costs exceed their target amounts was found across and within all provider types.

Although aggregate Medicare payment to cost ratios generally improved for psychiatric, long-term care, and children's facilities in recent years, this was due primarily to the influx of new providers. Facilities that first received TEFRA payments after fiscal year 1989 had higher payments (as well as higher payments relative to costs) than facilities that were subject to TEFRA before 1990. Because it does not have data on exceptions payments, however, the Commission cannot draw definite conclusions about financial performance.[7] Anecdotal evidence suggests that certain facilities, particularly long-term care hospitals, receive large lump-sum exceptions payments. Therefore, reported losses are likely to be overstated, but by how much is unknown.

Both the Congress's and the President's proposals contain provisions to mitigate the payment disparities between new and old providers as well as generate savings for the Medicare program. The Congress would apply a facility-specific update to the target amount ranging from the projected increase in the PPS-excluded market basket to the market basket increase minus 2.5 percentage points for fiscal years 1996 through 2002. The reduction from the market basket projection would depend on the extent to which a facility's current costs exceed its target—the higher a facility's costs are relative to its target, the larger the update. Facilities with allowable costs substantially below the ceiling in a given year would not receive an update. These low-cost providers generally would receive the same incentive payment, however. The Congress also would reduce capital payments, which are based on each facility's Medicare-allowable costs, by 10 percent.

The Congress also proposes to apply a floor to the target amounts for rehabilitation facilities and long-term care hospitals that first received Medicare payments before October 1, 1995, and a ceiling for those that first received payments on or after that date. Further, a new base year would be assigned to certain long-term care hospitals that serve a disproportionate share of low-income patients and had costs above their targets in fiscal years 1993 and 1994.

The President proposes to update the TEFRA target amounts for all providers by the projected increase in the market basket minus 1.0 percentage points for fiscal years 1996 through 2000. In 2001 and 2002, the update would equal the market basket increase minus 1.5 percentage points. Further, facilities would receive 85 percent of their Medicare-allowable capital costs in fiscal years 1996 through 2005.

To account for the widening disparity between costs and payments for certain providers, the Administration proposes to rebase the target amounts for all PPS-excluded facilities using more recent cost report data, subject to floor and ceiling limits. The proposal also includes revisions to the basic TEFRA payment method such that only certain facilities would be eligible for exceptions adjustments. Additionally, only those providers whose costs exceed 110 percent of the target amount would receive payments greater than their target. Finally, the President would impose a moratorium on certification of new long-term care hospitals.

TEFRA modified cost-based payments to encourage providers to operate more efficiently and restrain cost increases. It is expected, therefore, that some facilities will be winners, while others will lose. But by its very design, TEFRA systematically creates an inequitable payment distribution. These inequities may be mitigated by the exceptions process, which provides additional payments to facilities when events or circumstances beyond their control significantly increase their costs. However, the potential availability of exceptions may weaken TEFRA's cost-containment incentives.

52

The Commission therefore believes that Medicare should move more quickly toward implementing a prospective payment system for these facilities. Such a system, in which payments are based on national or regional average costs rather than on facility-specific costs, would promote efficiency among providers. It also would recognize certain cost differences that are beyond providers' control and accommodate changes in case mix and practice patterns.

In the interim, ProPAC 's analytic framework can be used to update TEFRA target amounts. This approach is similar to the Commission's framework for PPS payment updates, but modified to reflect differences between TEFRA and PPS. Hence, the update is determined primarily by the projected increase in the PPS-excluded market basket index.

Medicare automatically shares in savings from productivity improvements under the TEFRA system, and payments are not case-mix adjusted. Consequently, adjustments for these factors are not needed to determine an appropriate update. Scientific and technological advances, while considered, were not included because they are not likely to increase costs significantly in the coming year. Therefore, the Commission's methodology results in an update for fiscal year 1997 equal to the market basket increase minus 0.6 percentage points to account for previous forecast error.

Although this framework yields an average update for all PPS-excluded providers, the Commission supports the notion of a facility-specific update as contained in current law and in the congressional proposal. By allowing for differential updates depending on the costliness of care, such an update recognizes that, in some cases, rising costs may be beyond a hospital's control.

TEACHING HOSPITALS

Medicare is the only payer that makes explicit payments for hospitals' teaching-related costs: the indirect medical education (IME) adjustment and the direct graduate medical education (GME) payment. Other payers have traditionally paid higher rates to teaching institutions for these costs. The Congress and the President propose to make several changes to Medicare's payments. The Congress also would establish a Teaching Hospital and Graduate Medical Education Trust Fund to provide additional explicit support for teaching-related costs.

Teaching hospitals incur higher costs than other facilities because of their education and research missions. Many carry the added financial burden of caring for a disproportionate share of poor or uninsured patients. Higher costs may put these facilities at a disadvantage relative to other hospitals, particularly in areas with excess inpatient capacity. Because Medicare provides additional funds to teaching and disproportionate share hospitals, the PPS margins for these facilities are much higher than those for other hospitals. Their total margins, however, are lower than average. The Commission is concerned about maintaining the financial viability of teaching hospitals because of the special role they play in the health care system.

These concerns are heightened by the changes now occuring in the health care marketplace. Teaching hospitals may have added difficulties obtaining patient volume or contracts from increasingly cost-conscious insurers and health plans. As these financial pressures grow, the Medicare program needs to ensure that its payments accurately account for the added costs teaching hospitals face. The appropriate role of other payers in supporting these social goals needs to be reassessed as well. It also is critical that funds be distributed to those facilities that make the largest contributions and have the greatest need.

The distribution of teaching-related payments can influence the number and mix of physicians across specialties. Medicare inpatient payments go up for each resident a hospital trains, which could provide incentives to substitute residents for other personnel. Further, certain specialties may be more attractive to hospitals because they can generate greater faculty practice plan revenues than others. These factors may distort the hospital market for residents and may impede movement toward an appropriate mix and number of physicians. The distribution of teaching-related funds therefore must encourage, or at least be consistent with, the right balance.

Both the Congress and the President would substantially reduce Medicare's teaching-related spending, with cumulative savings between fiscal

years 1996 and 2002 of almost $13 billion under the congressional proposal and $10 billion under the President's. The size of the Medicare teaching payment reductions would be the same under both proposals in fiscal year 2002: about $3.2 billion, according to the Congressional Budget Office. The financial effects of these reductions, along with other changes in Medicare payment, need to be monitored to make sure they do not adversely affect teaching hospitals. The Medicare payment reductions in the congressional proposal would be offset, however, by general revenue payments from the new Teaching Hospital and Graduate Medical Education Trust Fund, whose cumulative contributions would total $13.5 billion through fiscal year 2002.

Direct Graduate Medical Education Payments

When PPS was implemented, Medicare's share of the direct costs of residency training programs (salaries and benefits of residents and faculty, classroom costs, and associated overhead) was reimbursed on a reasonable cost basis. The Consolidated Omnibus Budget Reconciliation Act of 1985 (COBRA) changed this to a hospital-specific per resident payment amount based on reported costs from the first year of PPS. This amount is updated annually by the increase in the consumer price index, although the payment amounts were frozen for non-primary care residents in fiscal years 1994 and 1995. Medicare's payment is determined by multiplying a hospital's updated per resident payment amount by the weighted count of residents and then by Medicare's share of inpatient days. Residents who have completed their initial residency period are counted as half a full-time equivalent (FTE) resident. The initial residency period is the minimum number of years required for board eligibility in a specialty or five years, whichever is less.

One issue of concern is the wide variation in the per resident payment amounts across hospitals, caused by differences in reported base year costs. This variation may be the result of differences in resident salaries, teaching physician costs, or allocated overhead expenses. These base year cost differences, however, may also reflect variation in hospital cost reporting practices. Resident counts and the use of weighting factors to pay less for certain residents is another issue. Medicare does not limit the number of residents who can be counted for payment, and there is concern that this may encourage hospitals to expand their training programs. Weighting factors are used in the current direct GME payment to discourage hospitals from training residents in subspecialties. It is unclear, though, whether the current weighting factors influence hospitals in their specialty mix decisions.

Medicare GME payments would remain unchanged under the congressional proposal, except that residents who are past their initial residency period would count only as a quarter of an FTE. In addition, the aggregate number of residents used in calculating payments would be frozen, although this would affect only hospitals that experienced an increase in residents.

The President's proposal would extend through fiscal year 2000 the freeze on per resident payment amounts for residents who are in non-primary care specialties. This proposal also would freeze, on a hospital-specific basis, both the number of non-primary care residents and the total number of residents who could be counted for payment. In addition, the Administration's proposal would allow direct GME payments to non-hospital providers for primary care residents in other settings when the hospital is not paying for the resident's salary in those sites.

Indirect Medical Education Payments

The indirect medical education adjustment is intended to compensate teaching hospitals for their higher Medicare patient care costs. These costs may be due to greater patient acuity, a broader scope of services available, more intensive treatment, and a costlier mix of staff than in other facilities. They may also be attributable to the expense of developing and improving diagnostic and therapeutic technologies or to the less efficient practice style of residents.

Since 1987, the indirect medical education adjustment to PPS operating payments has been set at 7.7 percent for every 10 percent increment of teaching intensity, as measured by the ratio of interns and residents to hospital beds. On the basis of several years of analysis, the Commission believes the technically appropriate rate is 4.5 percent. Recognizing, however, that a sharp reduction

54

in IME payments could seriously affect teaching institutions, ProPAC in 1995 recommended lowering the adjustment from 7.7 percent to 6.7 percent in fiscal year 1996 and making further reductions only after reviewing the financial effects of this change. This recommendation was made in the context of the payment provisions in effect at the time.

The Congress has proposed reducing the IME adjustment to 6.7 percent in fiscal year 1996. The adjustment would then continue to decline gradually each year to a final level of 5.0 percent in fiscal year 2000. In addition, the proposal would establish a medical education trust fund that would provide additional payments to teaching hospitals based on each hospital's share of Medicare IME payments over a three-year base period. Funding for this new payment would come from general revenues, thus broadening the source of payment for teaching costs.

The President's proposal would lower the IME adjustment to 7.2 percent in 1996, after which it would decline in stages to 6.0 percent in fiscal year 2001. In addition, residents who were beyond their initial residency period would be counted as half an FTE for determining IME payments, as they are for GME payments. Under the proposal, residents who work in non-hospital settings also would be included in the hospital's IME resident count.

The IME adjustment continues to be higher than what the Commission has recommended in past years. Both the Congress and the President would reduce this adjustment from its current level. The President's proposal would lower it more slowly, but would also apply Medicare GME resident count and weighting rules to the IME resident counts. Treating the IME resident counts like those for GME would strengthen incentives to train residents in primary care specialties. The Commission is intrigued by such a policy, but has not examined its potential financial impact on hospitals. Such a policy could also affect the technically appropriate level for the IME adjustment. ProPAC plans to study this issue further. Finally, it is important that the impact of reducing IME payments, together with any reduced funding for disproportionate share payments, be closely monitored to make sure that Medicare beneficiaries' access to quality care is maintained.

Other Support for Teaching-Related Costs

The Congress's proposal would establish a Teaching Hospital and Graduate Medical Education Trust Fund to help support the cost of training residents. A total of $13.5 billion would be appropriated to the fund from general revenues between fiscal years 1997 and 2002, establishing a broader source of public support for residency training. A specified percentage of the general revenue funds would be allocated to a MedicarePlus Incentive Account. The remaining money would be allocated to the General Indirect-Cost Medical Education Account and General Direct-Cost Medical Education Account, based on the share of Medicare spending in fiscal year 1994 for IME and GME, respectively.[8]

The MedicarePlus Incentive Account would distribute funds to teaching hospitals based on their share of MedicarePlus admissions among all teaching hospitals. Thus, the size of a hospital's teaching program and the complexity of its patient population would not affect these payments. Hospitals with many MedicarePlus patients would be greatly rewarded for having only a few residents. Hospitals with a large teaching commitment, however, would receive the same per case payment as these other hospitals. Moreover, because the size of the fund is fixed, the actual per case payment would depend on the total number of MedicarePlus admissions to teaching hospitals. Consequently, if few beneficiaries entered the MedicarePlus program or if few of these enrollees used teaching hospitals, the per case payment would likely be much higher than the associated costs. The reverse would be true if there were significant MedicarePlus participation, particularly in teaching hospitals.

The General Indirect-Cost Medical Education Account would distribute funds to teaching hospitals based on the share of total Medicare IME payments each hospital received over a three-year base period (1992 to 1994). Payments would not be affected by changes in the number of residents trained or the number and mix of patients treated. The General Direct-Cost Medical Education Account would distribute funds in a similar manner, based on a hospital's share of Medicare direct graduate medical education payments over the 1992 to 1994 period. The general direct-cost payment would thus depend on the hospital's per resident payment amount, resident count, and Medicare share of inpatient days in the

base period. It would not be adjusted, however, for changes in these factors between the base year and the time payments are made.

Distributing these two new accounts based on past Medicare spending for teaching may not be an effective way to provide broader general support for teaching-related expenses. This is because hospitals with high levels of Medicare teaching payments would also receive a large portion of these new general revenue payments. Conversely, hospitals with a low share of Medicare teaching payments, such as children's hospitals and some urban public hospitals, would receive little financial support from these general funds, even though they may have the same overall number of residents. The Commission is exploring a number of alternatives for distributing these funds. ProPAC will forward to the Congress later this year its views on how best to distribute general revenue payments so that they provide broader financial support for teaching-related activities in all settings.

The President's proposal would provide funds for teaching-related costs for Medicare beneficiaries in capitation programs. It would remove teaching-related payments from the Medicare capitation rates and return 75 percent of these funds to health maintenance organizations, hospitals, and other providers that operate teaching programs for the teaching costs of care provided to beneficiaries enrolled in capitation plans. This would result in lower capitation rates, particularly in some areas with a large number of teaching hospitals. Medicare participating health plans would need to adjust to these rates by reducing extra benefits, renegotiating provider contracts, accepting lower profits, or in other ways.

DISPROPORTIONATE SHARE HOSPITAL PAYMENTS

The disproportionate share (DSH) adjustment originally was intended to offset the cost-increasing effect of treating low-income patients. In recent years, its purpose has been viewed more broadly as preserving access to care for low-income populations by financially assisting the hospitals they use.

The amount of DSH payment each hospital receives is determined by a complex formula and each hospital's disproportionate share patient percentage. This percentage is derived as the sum of two ratios: Medicaid patient days as a share of total patient days and patient days for Medicare patients eligible to receive Supplemental Security Income cash payments as a percentage of total Medicare patient days. Most DSH payments go to urban hospitals.

The congressional proposal would not change the method of distributing DSH payments, but would substantially reduce funding for the adjustment. The cutback would be implemented in annual increments, beginning at 5 percent in 1996 and reaching 30 percent in 2000. The President's proposal includes a smaller funding reduction—10 percent—beginning in 1999.

These reductions would be implemented at a time when hospitals relying heavily on the DSH adjustment are facing competitive pressures that make it increasingly difficult to generate funds to cover their uncompensated care costs. Moreover, the number of people unable to pay for hospital care is likely to increase in the coming years. Even with insurance premiums rising more slowly than in the past, additional employers may drop health insurance coverage for their employees. Further, under the comprehensive Medicaid reforms proposed by the Congress, some states might elect to scale back Medicaid eligibility and service coverage. Finally, many local governments operating hospitals are facing their own financial pressures, which may make it difficult for them to maintain the level of operating subsidies they formerly provided.

Reductions in funding for the DSH adjustment highlight the importance of ensuring that the hospitals with the greatest need receive payments. However, optimizing the allocation of DSH funds is complicated by the use of a Medicaid variable in the distribution formula.

Medicaid utilization has never been a good measure of service to the poor, because the proportion of the low-income population covered by the program varies substantially from state to state, and the hospitals that provide the most care to uninsured low-income patients do not necessarily treat the most Medicaid patients. The misallocation may have been exacerbated in recent years by reforms a number of states have undertaken. Of particular

56

concern is the substantial expansion in eligibility for Medicaid in Oregon and Tennessee, with little or no indication of change in these states' low-income populations.[9] Moreover, the accuracy of a Medicaid patient day count in representing the amount of care provided to the poor may deteriorate even further under the expanded state role envisioned by the Congress. With much greater control over the design of their programs, some states may broaden eligibility and service coverage while others scale them back—all with virtually no relationship to the amount of care needed by the poor.

Because of these problems, it will be essential to improve the accuracy of the data used to distribute DSH payments. This should be done in the context of a comprehensive review of the objectives of the DSH adjustment and the methods available to best accomplish them. One important methodological issue is what populations to include, as the measure now used for distributing payments does not reflect a significant portion of hospitals' low-income patient loads. It will also be important to define the scope of patient care to be covered, such as whether DSH payments should apply to outpatient care or to hospital services provided in Medicare capitation programs.

The most appropriate measure of low-income patient care must then be identified. The primary choice here is between a measure of the amount of care provided to low-income patients and the losses incurred in treating the poor. Data collection methods would also need to be assessed, since most of the likely options for distributing payments would require new data. This presents a trade-off between the level of hospital reporting burden and the ability to allocate DSH monies among providers in the desired manner. In addition, it may be necessary to deal with the difficult issue of measuring charity care.

Revamping the DSH adjustment is potentially a complex process. However, inasmuch as the facilities now relying on DSH payments face growing pressure from private payers, Medicaid, and Medicare, the distribution of available funds will be crucial in protecting access to care for vulnerable populations.

DISCHARGES FROM PPS HOSPITALS TO OTHER FACILITIES

A per case payment system like PPS provides hospitals with a strong incentive to reduce length of stay. Hospitals can shorten stays by changing their practices to provide care more efficiently. They also can reduce the amount of care furnished in the inpatient setting by moving patients out of the hospital to other locations. When PPS began, there was evidence of this site-of-care substitution. Hospitals began conducting more preoperative tests in the outpatient setting, for example, instead of admitting the patient to the hospital the day before surgery.

The recent growth in the use of post-acute services, together with declines in PPS inpatient length of stay, raises the issue of whether site-of-care substitution is now occurring at the end of the hospital stay. (See Chapter 4 for a more complete discussion of this trend.) Many of the services delivered in post-acute settings may formerly have been provided in PPS hospitals. If payments are not adjusted to reflect any shift in site-of-care delivery, Medicare may be paying twice for the same service: once in the hospital, where the DRG payment rate reflects the cost of services no longer provided, and again in the post-acute care setting, where the service is now furnished. Although the DRG weights eventually reflect the relative resources required to treat the average case in a DRG, aggregate PPS payments do not reflect the shifting of these services from the hospital unless the PPS update accounts for this change in the hospital's product.

The President proposes to apply Medicare's transfer payment policy to patients who are discharged to PPS-excluded hospitals and units and to skilled nursing facilities. Hospitals that discharge patients to one of these facilities after a stay of at least a day less than the average for the DRG would receive a graduated per diem payment instead of the full DRG amount. Thus, PPS payments would be reduced when services were transferred from the hospital to post-acute sites. In addition, the proposal would stabilize the weights for DRGs with significant site-of-care shifts. This would allow the DRG weights to better reflect the cost of care provided to patients who were not discharged to another setting.

The Administration's proposal, however, would reduce hospitals' incentive to discharge patients to post-acute settings. This could result in longer hospital stays, even though the cost of providing care might be lower and the level of care might be more

appropriate in post-acute sites. This proposal could substantially weaken PPS incentives to shorten inpatient lengths of stay, leading to a less appropriate continuum of care for Medicare beneficiaries. Therefore, the likely effects of such a policy on hospital behavior need to be better understood before implementation proceeds.

CONCLUSIONS AND RECOMMENDATIONS

The Commission has developed recommendations in each of the policy areas addressed above. These include updates for the operating and capital components of PPS and PPS-excluded hospital payments, teaching and disproportionate share payments, and payment for discharges from PPS hospitals to post-acute facilities. Despite the emphasis on capitation programs in both the congressional and presidential proposals, these payment policies will continue to govern the majority of Medicare payments for inpatient hospital services.

Recommendation 10: Updating PPS Operating Rates

ProPAC's update framework would support an update between 0.7 percentage points and 2.0 percentage points less than the increase in the hospital market basket index. The methodology employed by the Commission in previous years would lead to a recommendation of about market basket minus 1.5 percentage points, roughly corresponding to the midpoint of that range. In light of the significant changes occurring in health care delivery, the Commission believes that PPS payment rate increases could be held to market basket minus 2.0 percentage points for the next year or two. However, it is concerned about the potential effects of continuing updates at that level on hospitals' ability to provide quality care to Medicare beneficiaries and other populations.

ProPAC's update framework accounts for the effects of inflation on hospital costs, adjusting for case-mix change, scientific and technological advances, and productivity improvements. The congressional proposal of market basket minus 2.0 percentage points falls within the range that results from applying the Commission's framework. The Congress, however, would set the update at this level through 2002.

In the short run, hospitals should be able to continue their recent productivity growth, and thus should not be adversely affected by an update that is 2.0 percentage points below the hospital market basket increase. Payers are applying pressure on providers—particularly hospitals—to restructure the way they operate and constrain the growth in their costs. Hospital occupancy rates remain relatively low in aggregate, indicating substantial system overcapacity and ongoing opportunities for hospital productivity improvements. Hospitals can continue to better the efficiency of staffing and capital purchasing as well. In view of the changes now occurring in the health care market, hospitals should still be able to provide quality care for the immediate future, despite this constrained rate of growth.

If updates are held to this level through 2002, though, hospitals may not be able to continue providing access to quality care. It is unclear, for instance, how long they will be able to support the productivity improvements needed to keep cost per case increases down to the level required by the proposed updates. Furthermore, some of the changes other payers are making, such as controlling the use of inpatient hospital services, will reduce hospital volume. This could raise per case costs for hospitalized patients. Moreover, a continuation of cost constraint at this level could require hospitals to forego technological advances that may significantly improve quality and patient outcomes. Finally, there is the basic uncertainty about the future. The Commission is concerned that once the updates become law, it would be extremely difficult to increase them to respond to deteriorating quality and hospital financial condition, should that occur.

Recommendation 11: Setting Capital Payment Rates

Prospective per discharge payment rates for inpatient capital costs should be set by developing an appropriate base payment rate and applying an annual update. The capital update should reflect the prices of capital assets, capital financing costs, and

58

other factors related to the capital costs hospitals incur in efficiently providing inpatient care to Medicare beneficiaries.

The capital payment rates currently in effect are based on estimated fiscal year 1992 hospital capital costs per discharge, updated by historical capital cost increases through 1995 and a prospective update framework for 1996. ProPAC has long opposed the use of historical cost increases, proposing instead that a prospective framework similar to that applied to PPS operating payments be used.

In the first four years of capital prospective payment, the effective capital payment rate has differed from the base payment rate due to a congressional requirement that total anticipated capital payments equal 90 percent of total anticipated capital costs. When this budget neutrality requirement expired at the end of fiscal year 1995, actual capital payment rates for 1996 went up more than 20 percent.

The Congress has proposed extending the budget neutrality requirement through fiscal year 2002 and setting payment rates so that total capital payments equal 85 percent of total anticipated capital costs. While this would eliminate the large increase in capital payments in 1996, it would continue the relationship between capital payments and costs in each year. The Commission believes that Medicare should move to a fully prospective capital payment system, severing the link between payments and costs.

Recommendation 12: Updating Payments to PPS-Excluded Hospitals and Distinct-Part Units

ProPAC's update framework would support an average update to the TEFRA target amounts equal to the projected increase in the market basket index minus 0.6 percentage points for fiscal year 1997. This average is within the range of facility-specific updates in the Congress's proposal, which is between the market basket increase and 2.5 percentage points below market basket. Major changes to the TEFRA target amounts should not be made at this time. Rather, a prospective payment system for PPS-excluded hospitals and distinct-part units should be implemented as soon as practicable.

ProPAC's update framework for payments to PPS-excluded hospitals and distinct-part units reflects the market basket increase for these facilities, corrected for previous forecast error. Unlike the Commission's approach for updating PPS payments, this framework does not include adjustments for productivity or case-mix change. It does reflect an allowance for scientific and technological advances, although this was zero for fiscal year 1997. Given the structural changes occurring in the hospital industry, the Commission believes PPS-excluded hospitals and distinct-part units should be able to successfully constrain their cost increases and still provide access to quality care within the provisions of the congressional proposal, at least for the next year or two.

Financial performance varies widely among PPS-excluded hospitals and distinct-part units, particularly between new facilities and those that have been operating for many years, according to ProPAC analyses. Much of this variation is related to the design of the TEFRA payment system rather than to hospital behavior. TEFRA is not suited—and was not intended—for long-term application. Rebasing the target amounts, however, would not solve the system's inherent problems. Assigning a more recent base year would increase payments to older facilities, which would improve payment equity somewhat. Yet older facilities would still be at a competitive disadvantage because recent costs would reflect past spending patterns that were constrained by the annual updates. A prospective payment system would recognize appropriate cost differences and reward efficient facilities, particularly older ones that have responded to TEFRA's incentives.

Because there is no acceptable measure of case mix, implementation of a prospective payment system in the near term is not feasible. The development of a patient classification system for rehabilitation hospitals and distinct-part units is progressing, but few advances have been made for other PPS-excluded providers. The Secretary should accelerate efforts to develop effective patient classification systems that can form the basis of a prospective payment system for these providers. (See Recommendations 20 and 21.)

In the meantime, the formulas for updating the TEFRA target amounts under current law and in the congressional proposal appropriately recognize that all facilities do not realize identical cost increases and allow for differential updates across providers according to individual experience. The Commission will continue to examine the TEFRA payment system and its effect on providers.

Recommendation 13: Broadening Financial Support to Teaching Hospitals

> **Explicit financial support for graduate medical education activities should not be limited to the Medicare program. Mechanisms to broaden financial support for teaching-related activities in hospitals and other locations should be developed.**

Medicare is the only payer that explicitly pays hospitals for the direct and indirect costs of teaching activities. Although other payers have implicitly provided funding for these activities by paying higher prices for patient care services, there is no direct connection between the amount of payment and the size or structure of the teaching program. Moreover, because the implicit support for teaching activities is not separable from the price of patient care at teaching hospitals, these facilities are at a disadvantage relative to non-teaching hospitals because of higher prices related to their teaching mission. As hospital markets become more competitive with the growth of managed care and other structural changes, it will be increasingly difficult for teaching hospitals to compete for patients from price-sensitive insurers.

To allow teaching hospitals to compete fairly with other institutions, the Commission supports the concept of an all-payer fund to help underwrite teaching activities at hospitals and in other settings. The Teaching Hospital and Graduate Medical Education Trust Fund proposed by the Congress would provide broader support for these activities by using both general revenues and Medicare payments. As centers for training future physicians, leaders in research, and providers to underserved populations, teaching hospitals are an integral part of this nation's health care delivery system. It is important that they remain viable in this role.

Recommendation 14: Medicare Payments for Graduate Medical Education Costs

> **ProPAC supports changes in Medicare teaching payments that would encourage an appropriate distribution of residents across specialties and discourage inappropriate growth in the total number of residents.**

Medicare payments should foster an appropriate specialty balance and supply of future practicing physicians. Both the President's and the Congress's proposals for Medicare direct GME payments would move in this direction. The President's proposal would provide greater incentives for training primary care residents than for those in other specialties, which is desirable. The Congress would discourage the growth in the number of residents while relying more on market forces to determine the number and distribution of physicians. Medicare payments should reflect the desired change in direction, rather than impeding these changes.

Recommendation 15: Medicare Indirect Medical Education Payments

> **The Medicare indirect medical education adjustment should be reduced from its current 7.7 percent level to 7.0 percent.**

Ultimately, the Medicare IME adjustment should be reduced from its current 7.7 percent level to one that corresponds more closely to the actual relationship between teaching intensity and costs. The final level of the adjustment, however, should depend on what other changes are made in the Medicare program. The Commission therefore recommends an initial reduction of the IME adjustment to 7.0 percent. As the adjustment is reduced, it will be important to monitor teaching hospitals' financial condition and the effect on access to their services.

ProPAC also supports the concept of basing IME payments on resident counts and weighting factors consistent with those used in GME payment. Additional analysis is needed to examine the effect of this policy on individual teaching hospitals, however. The Commission recommends proceeding cautiously with such a change. It is also important to point out that the technically appropriate level of

60

the teaching adjustment would change with such a policy. ProPAC plans to examine in more detail the impact of this policy on hospitals and on the empirical relationship between teaching intensity and hospital costs.

Recommendation 16: Distributing Additional Teaching-Related Payments

Funds that provide broader financial support for graduate medical education should be distributed in a way that corresponds to the additional costs incurred by teaching facilities. Providers that treat enrollees in capitation plans should receive teaching-related payments for those patients as well as for the other patients they serve.

ProPAC is concerned about how general revenues would be disbursed through the General Indirect-Cost Medical Education Account and the General Direct-Cost Medical Education Account. The distribution of payments from these accounts would be based on previous Medicare payment levels, even though the funds would come from general revenues. Hospitals with a high share of Medicare teaching payments would receive a proportionately higher share of these new payments compared to hospitals with the same amount of teaching activity but a low share of Medicare patients. Payments based on prior Medicare utilization may not achieve their broader purpose. Over the coming year, ProPAC will examine how best to provide general support for teaching-related activities.

Additionally, funding mechanisms are needed so that teaching hospitals can compete effectively in the managed care market. Such mechanisms should give participants in Medicare's capitation program an incentive to use teaching hospitals when needed while paying providers appropriately for serving capitation patients. How funds would be disbursed to hospitals under the Congress's proposed MedicarePlus Incentive Account concerns the Commission. First, these payments would not account for differences in the intensity or size of hospital residency programs. Second, because the total payments available through this account would be fixed, they would not reflect Medicare beneficiaries' use of the proposed MedicarePlus program. Payments from a fund like this one should reflect the amount of teaching activity in a hospital and other teaching settings. Further, total payments made through such a mechanism should depend on Medicare beneficiaries' participation in capitation programs.

Recommendation 17: Disproportionate Share Hospital Payments

The Commission is concerned about the potential impact of reductions in DSH payments. Hospitals that treat a large number of the uninsured could be particularly vulnerable because of recent changes in the health care environment. Large reductions in DSH payments would threaten the continued ability of many of these hospitals to serve populations who depend on them for access to care.

With increasing numbers of people lacking health insurance and contraction in many state and local programs designed to fund care for them, hospitals' uncompensated care burdens will likely be higher than ever in the coming years. Many of the hospitals that treat large numbers of uninsured patients are teaching institutions, which are facing stepped-up price competition in the private market along with substantial cutbacks in their IME payments. But some non-teaching hospitals also have significant low-income patient shares, and even among those involved in medical education, the amount of service to the poor frequently does not correspond to the level of teaching intensity. The financial integrity of many hospitals that play a critical role in ensuring access to care for low-income patients may be affected by changes occurring in the public and private financing of medical care. The role they serve will, if anything, become more important in the near future and should be protected.

Recommendation 18: Method for Distributing Disproportionate Share Payments

The structure of the DSH adjustment should be reviewed to make certain that available funds are distributed equitably among the hospitals most in need of assistance. This may require collecting new data to develop a better measure of the services hospitals provide to indigent patients.

The distribution of DSH payments is determined partly by each hospital's Medicaid patient days as a

percentage of total days. Medicaid utilization has never been an optimal measure of service to low-income patients, and its accuracy is deteriorating even further with changes taking place in the structure of the Medicaid programs in several states. Moreover, this problem would be exacerbated by the Medicaid reforms the Congress has proposed.

An alternative method of distributing DSH payments should be considered, but in the context of a comprehensive review. This review should begin by assessing the objectives of the DSH adjustment. It should also extend to defining the low-income population to be covered and identifying the scope of patient care to be included (for example, outpatient care or services furnished under the Medicare capitation program). Alternative measures of low-income patient care could then be considered, including the data collection each would require.

Recommendation 19: Discharges from PPS Hospitals to Other Facilities

> **Medicare payments should be modified to account for the shift in services from acute to post-acute settings. Broadening the definition of transfer cases, however, is not an appropriate approach.**

PPS provides hospitals with a strong financial incentive to reduce length of stay by moving care to other settings, since in most cases payments are the same regardless of whether the full course of treatment is provided in the hospital. Although the DRG weights eventually reflect this shift in services, aggregate Medicare payments do not. Constrained updates due to expected productivity improvements may appropriately adjust aggregate payments, but they will not account for cost differences between patients who use post-acute services and those who do not.

The President proposes to treat as transfers those cases who are discharged to skilled nursing facilities and PPS-excluded hospitals and units. The Commission, however, thinks this policy would discourage the use of post-acute providers. Moreover, it could result in longer inpatient stays, which may not be desirable or cost effective in the long run. The expanded transfer policy, therefore, should not be implemented without additional analysis of its impact. Other policies that would better integrate the payment system across settings need to be studied. One would be to bundle acute and post-acute services for certain DRGs into a single payment rate. Another would be to develop DRGs that reflect the use of post-acute services. The Commission will continue to examine methods to better integrate the fee-for-service payment system and will work with the Secretary on this endeavor.

Notes to Chapter 3

1. The Congress's Medicare provisions are in H.R. 2491, the "Balanced Budget Act of 1995." The Medicare provisions of the President's plan are in Title 11 of draft legislation, called the "Balanced Budget Act of 1995 for Economic Growth and Fairness." Released on December 7, 1995, this proposal has not been introduced in the Congress.

2. The PPS margin is the difference between the PPS operating payments a hospital receives and the operating costs of treating its Medicare patients, taken as a percentage of the payments.

3. ProPAC views cost shifting as a dynamic process whereby changes in payments relative to costs for some payers are offset by changes for other payers. During the late 1980s, increasing losses from Medicare, Medicaid, and uncompensated care were offset by increasing gains from private payers. For more information on this issue, see Prospective Payment Assessment Commission, *The Relationship of Hospital Costs and Payments by Source of Revenue, 1980-1991*, ProPAC Intramural Report I-95-01, October 1995.

4. Prospective Payment Assessment Commission, *Hospital Costs and Payments by Revenue Source: The Impact of Medicaid Payment Increases in 1992*, ProPAC Intramural Report I-95-05, October 1995.

5. The rehabilitation industry and the research community have developed a patient classification system for rehabilitation hospitals and distinct-part units (referred to as functional-related groups) that is based on patient functional status. HCFA is evaluating how well this technique works in grouping patients.

6. The Omnibus Budget Reconciliation Act of 1990 required the Secretary of Health and Human Services to propose either a prospective payment system for PPS-excluded providers or modifications to the current TEFRA system. The Act also required ProPAC to analyze and comment on the proposal. Absent the Secretary's proposal, the Commission submitted an interim report to the Congress that examined the financial condition of PPS-excluded providers and explored broad alternative payment methods. Prospective Payment Assessment Commission, *Interim Report on Payment Reform for PPS-Excluded Facilities*, Congressional Report C-92-05, October 1992.

7. Data on the amount of payment adjustments received through the exceptions process are not systematically collected or automated. In addition, there is a considerable lag between the time an exception is granted and when it appears as a higher target amount on the cost report.

8. The trust fund would also receive revenue from Medicare to support the Medicare Indirect-Cost Medical Education Account and the Medicare Direct-Cost Medical Education Account. Money from these two accounts would be used to finance indirect medical education adjustment payments and direct graduate medical education payments to certain hospitals that operate graduate training programs for interns and residents.

9. HCFA has attempted to minimize the bias resulting from the major reform in Tennessee and plans to do so for Oregon. Under HCFA's directive, Tennessee's Medicaid agency furnishes each hospital with a list of its patients who would have been eligible for Medicaid under the prior criteria. The hospitals then use this information to provide the Medicare fiscal intermediary with a restricted count of Medicaid days. This is an administratively difficult procedure, and does not appear to be a realistic approach for ensuring consistent Medicaid utilization data in the future.

Chapter 4

Post-Acute and Ambulatory Care Providers

As the share of Medicare expenditures devoted to hospital inpatient services declines, the share devoted to post-acute and ambulatory care continues to rise. This shift in spending primarily reflects major changes in the volume and mix of services used. Revisions in Medicare's coverage policies explain some of the increased use of post-acute services, but Medicare payment policies also encourage the growth of both post-acute and ambulatory care. Medicare's prospective payment system (PPS) provides incentives for hospitals to reduce costs by shifting services from inpatient to other settings. At the same time, the way that Medicare pays for post-acute and ambulatory facilities offers few incentives for providers to reduce their costs and control the volume of services they furnish.

Medicare has instituted many changes to its post-acute and ambulatory payment policies to contain its cost per service. An effective volume control measure has remained elusive, however. The overlap of services delivered across settings and the lack of a uniform definition of service units contribute to the difficulty in addressing this problem. Both the Congress and the President propose implementing prospective payment systems for services provided by skilled nursing facilities (SNFs) and home health agencies, the most significant sources of post-acute expenditures.[1] The prospective payment amount would apply to all the services furnished by the facility for an episode of care.

This chapter presents background information to support the Prospective Payment Assessment Commission's (ProPAC's) recommendations for payments to post-acute and ambulatory care providers. The recommendations reflect the Commission's concerns about expenditure growth within and across treatment settings. The first section focuses on rehabilitation facilities and long-term care hospitals, skilled nursing facilities, and home health agencies. It documents spending growth, payment policies, and proposed changes for each type of provider, concluding with ProPAC's recommendations. The second section contains comparable information for dialysis facilities and hospital outpatient departments.

POST-ACUTE CARE PROVIDERS

Payments to post-acute care providers are the fastest growing component of Medicare expenditures. Rehabilitation facilities, long-term care hospitals, skilled nursing facilities, and home health agencies accounted for more than 22 percent of Medicare Part A spending (including both program and beneficiary contributions) in 1993, up from about 7 percent in 1986 (see Table 4-1).

Post-acute care expenditures have been driven by a rapid growth in service utilization. Rehabilitation facility admissions per 1,000 beneficiaries, for example, climbed 148 percent between 1986 and 1993 (see Table 4-2). The increase in beneficiaries receiving care in a skilled nursing facility was similar over this period. Use rates for long-term care hospitals and home health agencies experienced marked growth as well.

Higher utilization is partly attributable to practice pattern changes resulting from Medicare coverage policies: Medicare relaxed restrictions on the coverage of home health and SNF services in the late 1980s, expanding the number of beneficiaries eligible to receive post-acute care. But payment policies for both acute care hospitals and post-acute care providers also contributed to greater use.

Medicare's PPS rewards acute care hospitals for reducing costs per admission. The most direct way for hospitals to lower costs is to shorten stays. In 1984, the Medicare average length of stay in a PPS hospital was 8.8 days. It fell to 8.1 days in 1991

66

Table 4-1. Distribution of Total Medicare and Beneficiary Payments for Selected Part A Services, 1986-1993

Year	Share of Part A Payments (In Percent)					Total Part A Payments (In Millions)
	PPS Hospital	Rehabilitation	Long-Term Care	Skilled Nursing	Home Health	
1986	91.2%	1.5%	0.2%	1.5%	3.7%	$ 53.3
1987	90.6	1.8	0.2	1.5	3.5	54.3
1988	89.3	2.0	0.3	2.2	3.6	59.0
1989	85.6	2.2	0.3	5.5	4.0	65.1
1990	84.1	2.6	0.3	4.8	5.4	72.4
1991	81.9	3.0	0.3	4.8	7.0	81.2
1992	78.1	3.4	0.3	6.3	8.7	91.3
1993	74.3	3.6	0.5	7.9	10.4	102.5

Note: The percentages do not add to 100 percent because shares for hospices, cancer hospitals, children's hospitals, and psychiatric facilities are not shown. All numbers include both program and beneficiary payments.

SOURCE: ProPAC analysis using Medicare Cost Reports and other data from the Health Care Financing Administration.

and by another 13.1 percent to 7.1 days by 1994. Often the shortened stays were accomplished by providing some services that once were part of the hospitalization in a post-acute setting. In fact, ProPAC analysis found that for the 12 diagnosis-related groups (DRGs) most likely to result in post-acute service use, acute hospital length of stay reductions were greater than the average for all DRGs. From 1991 to 1994, length of stay for these DRGs fell more than 16 percent and as much as 28 percent, significantly more than the overall drop.

In 1995, about 58 percent of PPS hospitals had a skilled nursing facility, SNF swing beds, or a rehabilitation unit. ProPAC analysis showed that for the 12 DRGs with high post-acute use, hospitals with post-acute units had shorter lengths of stay than those without units. The difference may be that post-acute services were more readily available in hospitals that had such units. In addition to being able to lower costs subject to the PPS rate, hospitals that own post-acute units gain other financial advantages. They can raise the occupancy of the facility overall, thus providing a larger patient base over which to spread fixed costs. Other resources, such as expensive equipment or certain specialized personnel, also can be used more efficiently over a larger patient base and thus can lower per unit costs.

Table 4-2. Medicare Utilization for Selected Part A Services, 1986-1993

Year	Admissions Per 1,000 Beneficiaries[a]			Persons Served Per 1,000 Beneficiaries[b]	
	PPS Hospital	Rehabilitation	Long-Term Care	Skilled Nursing	Home Health
1986	316.5	2.9	0.4	9.6	49.8
1987	304.4	3.3	0.4	9.1	47.9
1988	298.7	3.7	0.5	11.7	48.1
1989	288.0	4.0	0.5	19.0	50.3
1990	285.6	5.0	0.5	18.7	56.8
1991	284.7	5.9	0.5	19.3	63.9
1992	285.5	6.6	0.6	22.1	71.0
1993	285.3	7.2	0.7	24.0	80.1
Percent change 1986-1993	-9.9%	148.3%	75.0%	150.0%	60.8%

[a] Admissions per 1,000 beneficiaries counts all admissions, not the number of beneficiaries who were hospitalized at any time during the year.

[b] Persons served per 1,000 beneficiaries counts the number of beneficiaries who were provided the service in a given year, not the number of admissions.

SOURCE: ProPAC analysis of Medicare Cost Reports and data from the Health Care Financing Administration.

Medicare's payment policies for post-acute providers also have contributed to the expansion of post-acute service use and expenditures. Rehabilitation facilities and long-term care hospitals receive cost-based payments at least for their first two years of operation, after which payments are limited by a facility-specific cap. This payment method encourages the development of new facilities and rewards those that have high costs. Skilled nursing facilities also are paid their incurred costs up to a limit for routine services, such as room, board, and nursing care. However, because of varying definitions of the costs subject to these limits and open-ended cost reimbursement for ancillary services, payments per beneficiary have increased substantially. Further, despite per visit home health payment limits, the number and scope of services provided are not restrained and as a result have grown.

Medicare's post-acute facility payment methods have been modified over the years to control expenditures. Several characteristics of post-acute providers, however, make it difficult to slow spending. One is the overlap of services delivered across sites. All of these facilities provide therapy—speech, physical, and occupational—as well as more medically related nursing services. At least a portion of the patient population in any of these settings could be treated in another site. Yet because the payment methods and rates vary across providers, the Medicare program pays different amounts for the same or similar services, depending on where they are delivered.

Service payment units are not measured consistently across settings, which also contributes to the difficulty in controlling costs. Rehabilitation hospitals, for example, receive a per stay payment. By contrast, skilled nursing facilities are subject to per diem cost limits for routine services, and ancillary services are paid separately. As a result of the various payment definitions and methods, the total costs for an episode of care cannot be compared across sites. Thus, it is difficult to ensure that Medicare's policies encourage the most cost-effective methods of care. Even the payment modifications proposed by the Congress and the President would not facilitate comparisons of service volume, patient mix, or case severity across post-acute providers.

An additional complication is the changing nature of service delivery and organization. Increasingly, many of these providers are offering a level of care labeled "subacute." Less intensive than the care traditionally offered in a hospital, subacute care may describe the set of services formerly provided at the end of a hospital stay. Some beneficiaries who bypassed an acute care hospital to receive rehabilitation services or to be admitted to a long-term care hospital may be receiving subacute care. Because Medicare's payment methods vary across provider type, they do not consistently reflect the type or level of care a patient receives. Consequently, Medicare payments frequently do not reflect new patterns of service delivery.

Rehabilitation Facilities and Long-Term Care Hospitals

Rehabilitation facilities and long-term care hospitals are paid in accordance with the Tax Equity and Fiscal Responsibility Act of 1982 (TEFRA). Under TEFRA, payments for inpatient operating costs are based on each facility's current Medicare-allowable costs or a facility-specific limit. The limit (or target amount) equals the facility's allowable costs per discharge in a base year, trended to the current year by an annual update factor. Capital payments are based on reasonable costs. (See Chapter 3 for a complete description of the TEFRA payment method.)

When TEFRA was enacted in 1982, it applied to all hospitals. The Congress intended it to be a temporary measure to slow hospital expenditure growth until a fully prospective payment system could be implemented. When PPS began on October 1, 1983, however, certain types of hospitals and distinct-part units were excluded because DRGs and payments based on national average costs were not appropriate for them. The Congress expected that a separate prospective payment system for these facilities would be implemented within a few years.

PPS-excluded facilities have continued under the TEFRA payment system for longer than expected, however. This is because adequate patient classification systems, which are needed for a prospective payment system, have not been developed. Consequently, several flaws inherent in TEFRA that would have had little significance in the short run have led to growth in aggregate Medicare utilization and expenditures over time, as well as substantial inequities across providers.

68

Of primary concern is the use of facility-specific costs to set base payment limits. Because the expense of opening a new facility is higher today than in the past, facilities with more recent base years automatically have higher limits and receive higher payments. The incentive to open a facility is strengthened by the fact that newly certified PPS-excluded hospitals or units are exempt from the TEFRA limits for their first two 12-month cost reporting periods. During this time, Medicare pays on the basis of reasonable costs; the second cost reporting period is designated as the base year.[2] Consequently, new providers have no incentive to avoid high start-up costs because these result in higher base year costs and higher future cost limits.

Moreover, acute care hospitals that treat a large number of long-stay cases or patients who require rehabilitative care have a strong incentive to establish rehabilitation distinct-part units or separate long-term care hospitals within hospitals. By doing this, an acute care hospital can lower its costs subject to PPS and reallocate some expenses to its specialty hospital or to a unit that receives cost-based reimbursement. To the extent that the TEFRA payment for long-stay or rehabilitation cases is greater than the regular DRG payment plus any outlier payment under PPS, the financial benefit could be substantial.

Growth in Facilities, Utilization, and Expenditures—The number of Medicare-certified rehabilitation and long-term care facilities has grown rapidly over the last decade (see Table 4-3). Between 1986 and 1994, rehabilitation hospitals and distinct-part units grew by 160 percent and 75 percent, respectively. After dipping in the late 1980s, the number of long-term care hospitals increased from 90 in 1990 to 146 in 1994. Similarly, Medicare discharges from rehabilitation hospitals and units combined rose by 39 percent from 1990 to 1993, and long-term care hospital discharges grew by 48 percent over the same period (see Table 4-4).

The proliferation of providers and the growth in discharges have led to a marked increase in aggregate Medicare spending for rehabilitation and long-term care facility services (see Table 4-5). Total payments to rehabilitation hospitals and units combined rose from $1.9 billion in 1990 to $3.7 billion in 1993—a 95 percent increase. Although Medicare payments to long-term care hospitals are comparatively small, they grew by 150 percent over the same period.

The TEFRA payment system was designed to moderate the growth in Medicare hospital payments by giving facilities an incentive to constrain cost increases. Recent ProPAC analyses indicate that lengths of stay in rehabilitation and long-term care facilities have declined and annual per case cost increases have slowed for certain groups of facilities. Yet aggregate Medicare inpatient operating payments per discharge for these providers have risen, on average, faster than the market basket. In fact, aggregate operating payments to long-term care hospitals grew by about 15 percent per year from 1990 to 1993. This is primarily due to the large number of new providers that entered the TEFRA payment system with higher costs, resulting in higher aggregate payments.

Proposed Payment Changes—The Congress's and the President's proposals contain provisions to curb TEFRA payment increases through lower updates to the target amount, capital payment reductions, limits on exceptions adjustments, and restrictions on additional payments for facilities

Table 4-3. Medicare-Certified Rehabilitation and Long-Term Care Facilities, Selected Years

Facility Type	1986	1988	1990	1992	1994	Percent Change 1986-1994
Rehabilitation	545	697	813	923	1,019	87%
Hospitals	75	106	135	164	195	160
Distinct-part units	470	591	678	759	824	75
Long-term care	94	82	90	102	146	55

SOURCE: Health Care Financing Administration, Office of Survey and Certification.

Table 4-4. Medicare Discharges from Rehabilitation and Long-Term Care Facilities, 1990-1993

Facility Type	1990	1991	1992	1993	Percent Change 1990-1993
Rehabilitation	169,491	198,423	223,948	235,212	39%
Hospitals	55,814	65,248	73,479	68,297	22
Distinct-part units	113,677	133,175	150,469	166,915	47
Long-term care	15,262	16,474	18,334	22,514	48

Note: Due to missing and inaccurate data, these figures do not represent total Medicare discharges.

SOURCE: ProPAC analysis of Medicare Cost Report data from the Health Care Financing Administration.

with operating costs above their target amounts. (See Chapter 3 for more information regarding these proposals.) Neither proposal, however, addresses the need to control utilization, although the President proposes to place a moratorium on certifying new long-term care hospitals.

Skilled Nursing Facility Services

The Medicare Part A SNF benefit provides up to 100 days of post-acute care per spell of illness. To be eligible, Medicare beneficiaries must have completed a minimum three-day hospital stay within 30 days prior to the SNF admission and be in need of skilled nursing or rehabilitative services on a daily basis.

For payment purposes, Medicare separates SNF costs into routine, capital, and ancillary service categories. Medicare payments for routine costs, which include room, board, and skilled nursing services, are based on facility-specific costs, subject to an input price-adjusted national average per diem cost limit. Separate limits apply for hospital-based and freestanding facilities. These limits usually are updated each year, but were frozen for fiscal years 1994 and 1995. Capital costs and those for ancillary services, such as physical therapy, occupational therapy, speech therapy, laboratory tests, and radiology procedures, are reimbursed on a facility-specific cost basis.[3] Although most ancillary services are provided by SNFs and paid under Part A, there are situations when they are reimbursed under Part B.

Growth in Facilities, Utilization, and Expenditures—Between 1986 and 1994, the number of hospital-based SNFs increased by 163 percent, from 652 to 1,718 (see Table 4-6). The number of freestanding SNFs rose by 29 percent, while hospitals with SNF swing beds rose by 65 percent. During this period, many hospitals responded to declining average lengths of stay for Medicare beneficiaries and other patients by developing new lines of business, including hospital-based SNFs. Less restrictive state planning requirements for converting hospital acute-care beds to SNF beds contributed to their rapid growth.

Similar patterns are found in utilization and expenditures. In 1986, some 304,000 Medicare beneficiaries received care in skilled nursing facilities, and Medicare program payments totaled $600 million (see Table 4-7). By 1994, 925,000 beneficiaries received SNF care, and payments reached $8.3 billion. Numerous incremental legislative and administrative changes to SNF coverage and payment

Table 4-5. Medicare Rehabilitation and Long-Term Care Facility Payments, 1990-1993 (In Billions)

Facility Type	1990	1991	1992	1993*	Percent Change 1990-1993
Rehabilitation	$1.9	$2.4	$3.1	$3.7	95%
Long-term care	0.2	0.2	0.3	0.5	150

Note: Includes program payments and beneficiary payments. Does not include exceptions payments.

* Payments for facilities with cost reporting periods beginning on or after October 1, 1993, and before January 1, 1994, are estimated.

SOURCE: ProPAC analysis of Medicare Cost Reports and other data from the Health Care Financing Administration.

70

Table 4-6. Types of Medicare-Certified Skilled Nursing Facilities, Selected Years

Facility Type	1986	1990	1994	Percent Change 1986-1994
Hospital-based	652	1,145	1,718	163%
Freestanding	8,414	8,120	10,818	29
Swing-bed hospitals	812	1,243	1,342	65

SOURCE: Health Care Financing Administration, Office of Survey and Certification.

policies have contributed to utilization and payment growth. The most significant ones were a lawsuit that resulted in broadening SNF coverage guidelines in April 1988, along with the passage of the Medicare Catastrophic Coverage Act (MCCA) of 1988, and its repeal in 1990.[4] The impact of these changes can be seen in the increase in Medicare-covered days and program payments in 1989, followed by a decrease in 1990. Although covered days have grown at an average annual rate of 10 percent since 1990, Part A program payments for SNF services have gone up even faster, at an average annual rate of 35 percent.

Some of the recent rise in Medicare program payments may be attributable to higher prices for inputs. Inflation alone, however, cannot account for the disparity between growth in use and payments. One source of the higher rise in payments has been the greater use of therapy and other ancillary services provided to Medicare patients. In 1988, charges for physical, occupational, speech, and respiratory therapy services were about 15 percent of total Medicare SNF charges. By 1994, therapy services represented more than 30 percent of charges. Even though final payments for these and other ancillary services are based on costs rather than charges, these estimates suggest a large increase in their contribution to the overall growth of Medicare payments for SNF services.

Because of cost-based payment, greater ancillary use results in higher Medicare payments. Further, SNFs may cite high ancillary service use to justify an exemption from routine service cost limits, thereby increasing routine service payments.

Proposed Payment Changes—Many factors have contributed to the dramatic rise in Medicare expenditures for SNF services. The Congress and the President agree that the most appropriate long-term method for controlling SNF spending is to establish a comprehensive prospective payment system. Both have proposed legislation to do this. They differ, however, in their timing for implementing the comprehensive system and their methods for constraining Medicare payments under interim measures.

The Congressional Proposal—The Congress proposes significant changes to Medicare's payment for skilled nursing facility services. It would

Table 4-7. Medicare Skilled Nursing Facility Payments and Utilization, 1983-1994

Year of Service	Skilled Nursing Facility: Payments (In Billions)	Skilled Nursing Facility: Percent Change	People Served: Number (In Thousands)	People Served: Per 1,000 Enrollees	Days: Number (In Thousands)	Days: Per Person Served
1983	$0.5	—	265	9	9,314	35.1
1984	0.6	6.9%	299	10	9,640	32.2
1985	0.6	2.9	314	10	8,927	28.4
1986	0.6	0.2	304	10	8,160	26.8
1987	0.6	8.8	293	9	7,445	25.4
1988	0.9	47.1	384	12	10,667	27.8
1989	3.5	275.7	636	19	29,780	46.8
1990	2.5	-29.0	638	19	25,200	39.5
1991	2.9	18.4	671	20	23,700	35.3
1992	4.5	55.3	785	22	28,960	36.9
1993	6.5	42.8	870	24	34,437	39.6
1994*	8.3	28.5	925	25	36,865	39.9

Note: Payments represent program liabilities incurred during the year and do not include beneficiary copayments.

* Estimated.

SOURCE: Health Care Financing Administration, Office of the Actuary.

require the Secretary of Health and Human Services to establish a prospective payment system for SNF services to be implemented on October 1, 1997. Under this system, a SNF would receive a fixed payment for each episode of care; the payment would cover all routine, nonroutine, and capital costs. Payment rates could vary by case mix, patient acuity, or any other appropriate factors. Aggregate payments, however, could not exceed 90 percent of what would have been paid under the current system. In addition, the prospective payment rates would be reduced to take into account beneficiary coinsurance.

An interim payment system for services provided on or after October 1, 1995, would be established until a prospective payment system was implemented. Since much of the recent growth in SNF spending is due to increased ancillary service use, payment for these services would be limited. Routine services would be subject to the per diem limits, and nonroutine services would be subject to facility-specific aggregate per stay cost limits. Nonroutine services would include all therapies, prescription drugs, complex medical equipment, intravenous therapy and solutions, radiation therapy, and diagnostic services. All other services, including some now considered ancillary, would be regarded as routine.

For fiscal year 1996 and beyond, the Secretary would recalculate the per diem routine cost limits, taking into account the expanded definition of routine services. To maintain the savings associated with the fiscal year 1994 and 1995 freeze on routine cost limits, any changes in the costs of services that occurred during these years would not be included in the new limits.

Payments for nonroutine services would be based on facility-specific costs, subject to facility-specific aggregate per stay cost limits.[5] This would provide an incentive for SNFs to restrict ancillary service use while allowing for variation across facilities in costs related to patient mix and input prices. For fiscal years 1996 through 2002, Medicare payments for SNF capital costs would be reduced by 10 percent.

The congressional proposal would also require the Secretary to establish a separate per stay amount for patients who need intensive nursing or therapy services and to implement an annual exceptions payment application period. In addition, Part B billing would be restricted, and SNFs would have to submit all claims for beneficiaries in their care. SNFs would be required to document on their Medicare Cost Report all nonroutine services provided to Medicare SNF patients, beginning in fiscal year 1996. This would include the number and type of therapy services, laboratory tests, and radiology and diagnostic procedures.

The Administration's Proposal—The Administration's proposal would also significantly alter Medicare payment for skilled nursing facility services. A prospective payment system for SNFs would be implemented beginning in fiscal year 1999. It would be based on fixed payments for all routine, ancillary, and capital costs. Budget-neutral rates would be calculated so that aggregate fiscal year 1999 payments would not exceed 93 percent of aggregate fiscal year 1998 payments.

Beginning in fiscal year 1997 and until the establishment of the comprehensive prospective payment system, SNFs would be reimbursed under an interim system. Payments for routine services would be based on facility-specific prospective per diem payment rates. They would be calculated using Medicare Cost Report data, adjusted to maintain the savings associated with the freeze on routine cost limits during fiscal years 1994 and 1995. These rates would be subject to regional limits, adjusted to reflect differences in input prices. Although these limits would be applied to all SNFs, they would be calculated using data for freestanding facilities only, rather than including hospital-based SNFs, which tend to have higher costs. The per diem rates could be adjusted to reflect changes in the mix of patients treated by a SNF. However, these adjustments would be made prospectively and in a budget-neutral manner.

Ancillary services would continue to be reimbursed on a facility-specific cost basis, but only up to the amount that would have been paid under the fee schedule rates used by Medicare to pay other facilities for similar services. Salaries for therapists who provide contracted services would be limited as well. Capital costs would continue to be reimbursed on a facility-specific cost basis.

Beginning in fiscal year 1997, SNFs could no longer receive exceptions payments for costs in

excess of their limits. In addition, new facilities would no longer be granted an exemption from routine cost limits for their first few years of operation. Prospective per diem payment rates for routine services in new facilities would be based on the mean payment for SNFs in the same geographic area. SNFs would also have to submit all claims for Part B services for their patients and use consistent coding.

Home Health Services

Beneficiaries qualify for home health services if they are homebound and under the care of a physician who prescribes part-time or intermittent skilled nursing services, physical therapy, or speech therapy. Once authorized, beneficiaries may receive an unlimited number of these qualifying services, as well as home health aide visits, medical social services, or occupational therapy. Coverage is not tied to a prior hospitalization, and no copayment is required.

Under Medicare's payment method for home health services, agencies are paid the lower of their aggregate costs or limits. The limits are equal to 112 percent of the average cost per visit for each of six types of visits, computed separately for rural and urban areas. The labor portion of each limit is adjusted by the hospital wage index. These cost limits are frozen for cost reporting periods beginning between July 1, 1994, and June 30, 1996. Because this payment method is largely cost-based, agencies have little incentive to control the cost or volume of services delivered.

Growth in Facilities, Utilization, and Expenditures—The increased availability of home health providers has contributed to the growth in use and Medicare expenditures for these services. The number of licensed agencies climbed by 50 percent between 1990 and 1995 (see Table 4-8). Freestanding proprietary agencies, which accounted for about half of all agencies in 1995, rose 65 percent. Hospital-based agencies also grew substantially, from 1,543 in 1990 to 2,346 in 1995.

Home health visits have increased dramatically in the last decade, from about 37 million in 1983 to 209 million in 1994 (see Table 4-9). The number of beneficiaries using home health climbed from 45 per 1,000 Medicare enrollees to 87 per 1,000 enrollees during this period. Use levels also surged from an average of 28 to 65 visits per person. Much of this increase is due to changes in coverage guidelines. These revisions allowed beneficiaries who needed part-time care (fewer than eight hours a day) or intermittent care (four or fewer days per week) to qualify for services. This expanded both the number of people receiving the benefit and the number of services used.

Home health episodes of care have also become longer. A home health episode is defined as a series of visits, preceded and followed by a period without visits. Using a gap of 60 days to define new episodes, the proportion of short episodes (those lasting 30 or fewer days) fell from 39 percent in 1990 to 32 percent in 1993 (see Table 4-10). Episodes lasting 121 days or longer went from 19 percent to 25 percent of all episodes. Longer episodes tended to include a higher proportion of the less costly home health aide visits. For example, 50 percent of the visits in very long episodes (those lasting at least 166 days) were aide visits, whereas aide services accounted for only 21 percent of the visits in short episodes (see Table 4-11). Further, compared with shorter episodes, longer ones were characterized by a higher proportion of aide visits throughout the episode.

Medicare's spending for home health services has grown at least 20 percent a year since the late 1980s. The rate of growth has declined, however, since the 53 percent spike in 1990. Still, home health's share of Medicare program expenditures has continued rising.

Proposed Payment Changes—The Congress and the Administration both have proposed establishing prospective payment systems for home health services. The congressional proposal would set prospective rates for each type of home health visit but limit total payments per episode, as of fiscal year 1997. By contrast, the Administration's proposal would establish episode-based payments effective in fiscal year 2000. Measures to limit spending in the intervening years also would be introduced.

In addition, both proposals would retain the savings from the two-year freeze on the cost limits and would make other interim modifications to the current payment system to reduce Medicare spending.

Table 4-8. Types of Medicare-Certified Home Health Agencies, 1990-1995

Agency Type	1990	1991	1992	1993	1994	1995	Percent Change 1990-1995
Visiting Nurse Association	476	515	595	596	575	570	20%
Government	981	1,089	1,240	1,205	1,208	1,191	21
Hospital-based	1,543	1,601	1,786	1,998	2,207	2,346	52
Rehabilitation facility-based	10	4	1	1	3	3	-70
Skilled nursing facility-based	105	90	106	117	127	145	38
Freestanding proprietary*	2,678	2,650	2,691	3,234	3,937	4,407	65
Total	5,793	5,949	6,419	7,151	8,057	8,662	50

* Includes a small number of freestanding, private, not-for-profit agencies that are not Visiting Nurse Associations (26 percent).

SOURCE: Health Care Financing Administration, Office of Survey and Certification.

The Congressional Proposal—The Congress proposes replacing cost-based payments with prospective rates for each of the six types of home health visits beginning in fiscal year 1997. These rates would be based on national average costs in cost reporting periods ending on or before June 30, 1994. They would be updated for each succeeding year by the home health market basket increase minus 2.0 percentage points. Rates would be recalculated using the most recent data every five years beginning in October 1999.

Total payments for the first 165 days of care would be limited to the lower of actual per visit payments or aggregated, episode-based limits. To determine the episode limits, visits would be aggregated into patient-level episodes of care. Each episode would be classified into one of 18 case-mix categories. For each case-mix category, regional limits would be calculated based on the average cost of up to 120 days of care. Each agency's limit would equal the number of episodes it provided in each case-mix category times the regional case-mix limit.

Agencies with aggregate payments below their limit would receive an incentive payment equal to 50 percent of this difference up to 5 percent of their aggregate payments. Basing the payment limit on 120 days of care and sharing part of the payment difference would give agencies an incentive to reduce the number of services provided during an episode.

The episode limit would be applied to the first 165 days in an episode. The prospective payments for the subsequent visits in an episode would not be included in the episode-based payment limit. The

Table 4-9. Medicare Home Health Care Payments and Utilization, 1983-1994

	Medicare		People Served		Visits		
Year of Service	Payments (In Billions)	Percent Change	Number (In Thousands)	Per 1,000 Enrollees	Number (In Thousands)	Per 1,000 Enrollees	Per Person Served
1983	$ 1.6	—	1,318	45	36,898	1,234	28
1984	1.9	17.5%	1,498	50	40,422	1,330	27
1985	1.9	4.0	1,549	50	39,449	1,274	25
1986	1.9	-0.5	1,571	50	38,000	1,204	24
1987	1.9	-1.2	1,544	48	35,591	1,104	23
1988	2.1	8.6	1,582	48	37,132	1,130	23
1989	2.6	23.8	1,685	50	46,199	1,379	27
1990	3.9	53.2	1,940	57	69,565	2,038	36
1991	5.7	44.2	2,223	64	100,044	2,875	45
1992	7.9	39.5	2,523	71	134,844	3,796	53
1993	10.7	34.6	2,900	80	173,953	4,804	60
1994*	13.0	22.1	3,220	87	209,149	5,765	65

Note: Payments represent program liabilities incurred during the year and do not include beneficiary copayments.

* Estimated.

SOURCE: Health Care Financing Administration, Office of the Actuary.

Table 4-10. Distribution of Home Health Episode Lengths, 1990 and 1993

Episode Length	Percent of All Episodes 1990	Percent of All Episodes 1993	Percent Change
All episodes	100%	100%	
Short	39	32	-7%
Medium	43	44	1
Long	19	25	6
121-165 days	5	—	—
166+ days	14	—	—

Note: Short episodes lasted 30 days or fewer; medium episodes exceeded 30 days but lasted fewer than 121 days; long episodes exceeded 120 days.

SOURCE: ProPAC analysis of 1990 and 1993 home health claims from the Health Care Financing Administration.

patient would, however, have to be certified as requiring continuing care. New episodes would begin after a period of 60 days without services.

The congressional proposal would also limit aggregate exceptions and exemptions payments to the amounts paid in fiscal year 1994, increased by the market basket percentage change for each year.

The Administration's Proposal—The Administration's proposal also would establish an episode-based prospective payment system for home health services, but not until fiscal year 2000. The Secretary would develop both a prospective payment rate for an episode of care and a reliable case-mix adjuster in the interim. The episode payment amounts would be updated by the market basket. If a beneficiary received services from multiple agencies, each agency's payment would be prorated. Payment rates would incorporate a 15 percent reduction in cost limits that would be in effect on September 30, 1999.

The Administration's proposal also contains some interim changes to the payment system for fiscal years 1997 through 1999. Agency payments would be the lower of aggregate cost limits, agency-specific per beneficiary amounts, or actual costs. Cost limits would be reduced from 112 percent of the mean to 105 percent of the median. The per beneficiary amount would be determined by blending 1994 agency-specific costs with the national average cost. Alternatively, the Secretary could substitute a utilization measure in this formula. Agencies could receive bonus payments up to 5 percent of their aggregate payments if their costs or utilization were below 125 percent of the 1994 national average or regional aggregate experience.

Other changes would base payments on the service delivery area instead of the agency's geographic

Table 4-11. Number and Type of Home Health Visits, by Episode Length

Episode Length	Total Number of Visits	When Visits Occur in Episode	Mean Visits Per Episode	Share of Visits in Episode: Skilled Nursing	Aide	Physical Therapy	Other
Short	6,930,600	100%	9	60%	21%	15%	4%
Medium	35,158,905	100	33	49	31	16	3
First 30 days		72		50	29	16	6
Days 31-120		28		45	36	15	4
Long	10,139,625	100	74	47	38	11	4
First 30 days		37		49	33	12	6
Days 31-120		56		45	40	11	4
Days 121-165		7		46	42	9	3
Very Long	83,114,840	100	163	42	50	6	2
First 30 days		18		49	38	9	4
Days 31-120		29		43	47	7	3
Days 121-165		14		41	57	5	3
Days 166 or more		39		38	57	4	1

Note: Short episodes lasted 30 days or fewer; medium episodes exceeded 30 days but lasted fewer than 121 days; long episodes exceeded 120 days. These data are for episodes beginning between July 1, 1993, and June 30, 1994.

SOURCE: ProPAC analysis of 1990 and 1993 home health claims from the Health Care Financing Administration.

location. Interim payments, which currently are provided to home health agencies, would be eliminated. The proposal also would require that, beginning in fiscal year 1997, only the services provided during the first 100 days following a hospitalization would be paid under Part A. Visits after that period or any that were not associated with a hospital stay would be paid under Part B.

Conclusions and Recommendations

Both the Congress's and the President's proposals attempt to restrict the growth in Medicare's post-acute care spending. The average payment updates under the TEFRA payment system would be lower than those under current law. Skilled nursing and home health payments would be changed from cost-based reimbursement to prospective payment systems. Each proposal contains interim measures to restrict payments. However, neither one fully addresses the rising use of post-acute services. Following are the Commission's recommendations on the general approach to improve payments to post-acute providers and to help control the growth in Medicare spending.

Recommendation 20: Prospective Payment for Post-Acute Care

Prospective payment systems should be implemented for all post-acute services. The payment method for each service should be consistent across delivery sites. The Secretary should explore methods to control the volume of post-acute service use, such as bundling services for a single payment.

The post-acute care industry is characterized by substantial growth in the numbers of providers, people receiving services, and the services used by each recipient. These factors have contributed to the double-digit increase in Medicare's expenditures and the ever-larger share of Medicare payments for post-acute services. Some of this growth is due to site substitution between hospitals and post-acute providers. A large part of it, however, is due to the absolute increase in post-acute services provided to beneficiaries.

Prospective payment systems for post-acute services are needed to ensure that only necessary services are provided and to improve Medicare's ability to track and compare service use. Further, broadening the payment unit to include all the services furnished during an episode of care would encourage providers to be more efficient. These payment changes, however, should be accompanied by mechanisms to make certain that facilities have the capacity to provide quality services appropriate to the patient's needs.

The Health Care Financing Administration (HCFA) has sponsored demonstration projects to develop prospective payment systems for skilled nursing facilities and home health agencies that have been in progress for several years. In addition, it is supporting research to develop prospective payment for rehabilitation services. Despite the overlap in the types of services delivered by each of these providers, the research projects have been managed, tested, and evaluated independently of each other. The Secretary should coordinate these efforts to develop consistent service units and prospective payment systems.

Recommendation 21: Case-Mix Measures for Post-Acute Services

Reliable case-mix measurement is important in prospective payment systems to account for resource use and to analyze treatment patterns and costs across sites. The Secretary should coordinate case-mix research across post-acute care settings, using consistent methods for measuring patient acuity and resource use.

Reliable case-mix measurement systems strengthen prospective payment by accounting for patient characteristics that affect resource use. Further, they allow for comparisons of service use and expenditures across beneficiaries and treatment settings. HCFA is sponsoring research to measure the intensity of services provided in rehabilitation, skilled nursing, and home health settings. It is essential that these studies be coordinated. Many of the same services, particularly nursing and therapies, are delivered by each of these providers, yet the units for measuring resource use differ in each demonstration. Thus, accurate comparisons of treatments or costs are not possible. HCFA should coordinate its efforts to produce a reliable system that consistently

classifies patients served and the number and types of services provided across delivery sites.

Recommendation 22: Interim Fee-for-Service Payment Method for Skilled Nursing Facility Services

An interim payment method should be implemented to control the growth in Medicare payments for SNF services until a comprehensive prospective payment system is established. A system based on historical data and facility-specific limits, however, may not allow facilities to respond appropriately to changes in a dynamic environment.

The Congress's and the President's proposals differ in their approaches to limiting Medicare payments for SNF services until a prospective payment system is implemented. They are similar, however, in that each would impose facility-specific and national limits. Both proposals would use Medicare Cost Report data, updated by the SNF market basket, to calculate limits or rates. Therefore, payments would reflect historical costs, patient mix, and treatment patterns. To account for the lack of a case-mix measurement system, the congressional plan would require the Secretary to develop a separate method for reimbursing SNFs for patients with intensive nursing or therapy needs. Likewise, the President's proposal would allow the Secretary to adjust the per diem rates to reflect changes in patient severity.

The Commission believes that interim payment limits should be designed to provide appropriate constraints on Medicare outlays without unduly restricting this evolving industry. Facility-specific limits would allow SNFs that had high costs during the base year to maintain higher payments year after year, while those that experienced low costs during the base year would be restricted to these lower levels. On the other hand, payment limits based on average costs would not reflect legitimate cost differences across facilities. Further, historical data would not account for the higher costs associated with the changing acuity of SNF patients. Alternative methods for calculating payment limits, such as using a larger geographic area or blending facility-specific and national rates, should be explored.

Recommendation 23: Interim Fee-for-Service Payment Method for Home Health Care

Until a fully prospective payment system is developed, the Commission supports adopting episode-based payment limits. In addition, beneficiary copayments, subject to an annual limit, should be introduced.

The Commission recognizes that a prospective payment system for home health care will take time to implement. In the interim, other mechanisms should be established to constrain the growth in service use. Instituting episode-based payment limits, as proposed by the Congress and the Administration, would encourage providers to deliver services more efficiently. In addition, adopting copayments would increase beneficiaries' involvement in home health treatment decisions, consistent with their financial responsibility for other Medicare-covered services. Beneficiary out-of-pocket costs should be limited, however, so that the copayments do not restrict access inappropriately. Further, Medicare needs to explore other means, such as case management and utilization review, to control use.

In developing prospective payment rates, characteristics of the current home health delivery system should be considered. Units of service are not uniformly defined across agencies. Consistent definitions would allow the Secretary to better monitor and evaluate Medicare's expenditures and quality of care. In addition, both the Congress and the President propose blending national and regional costs to establish payment limits. While the Commission believes these proposals would improve the current cost-based system, it is concerned that maintaining regional variation in the limits would perpetuate unjustified differences in utilization and expenditures. ProPAC supports a transition from regional to national rates, as was used in establishing hospital prospective payment rates, to eliminate this type of unexplained variation.

AMBULATORY CARE PROVIDERS

Medicare spending for ambulatory care, whether furnished in outpatient facilities or in physicians' offices, increased from 30 percent of total program expenditures in 1983 to 32 percent in 1994. Part B payments to outpatient facilities alone reached

$14.1 billion in 1994.[6] Outpatient care is provided in hospital outpatient departments, freestanding ambulatory surgical centers, independent clinical laboratories, comprehensive outpatient rehabilitation facilities, and hospital-based and freestanding dialysis centers. However, 85 percent of Medicare outpatient spending goes to hospital outpatient departments and dialysis centers. This section focuses on services provided by these facilities.

Outpatient Dialysis Services

The 1972 amendments to the Social Security Act extended all Medicare Part A and Part B benefits to people with end-stage renal disease (ESRD). Virtually all patients of any age who are diagnosed with ESRD are eligible. ESRD is marked by the irreversible loss of kidney (renal) function. It is treated either with organ transplantation or permanent renal dialysis. The vast majority of ESRD enrollees are treated with either hemodialysis or peritoneal dialysis on an outpatient basis.[7] Consequently, there is a strong incentive for these beneficiaries to purchase Part B coverage.

Benefits for a kidney transplant patient generally start the month in which the transplant is performed, whereas dialysis benefits generally begin three months after eligibility is established. For an ESRD enrollee who also is covered by an employer-sponsored group health plan, all medical claims during the first 18 months of Medicare eligibility are paid first by the employer's plan. If the employer's plan does not pay in full, Medicare will make secondary payments up to its specified limits or the billed amount, whichever is lower. This is known as the Medicare secondary payer provision.

Most dialysis patients receive hemodialysis in either hospital-based or freestanding dialysis centers. Others dialyze at home under the supervision of a local facility. When coverage for ESRD patients began, Medicare paid hospital-based and freestanding dialysis providers their reasonable costs and reasonable charges, respectively, limited to $138 per treatment. Beginning in 1983, the payment methodology was changed to a prospective rate per dialysis treatment.

The prospective payment, called the composite rate, covers the bundle of services, tests, drugs, and supplies routinely required for a dialysis treatment (hemodialysis or peritoneal dialysis) whether it is provided in a facility or performed by the beneficiary at home. It represents the national median cost per treatment, weighted by the percentage of patients dialyzing in each site.

The composite rate was calculated in 1983 based on a sample of Medicare Cost Reports from 1977 through 1979. Therefore, it reflects the mix and costs of inputs and the proportion of patients dialyzing in different sites at that time. The labor portion of the base rate is adjusted for geographic differences in wages; however, payments may not exceed $139 per treatment.[8] Hospital-based facilities receive a slightly higher composite rate than freestanding facilities.

Unlike Medicare payments to other types of providers, the composite rate has not been updated annually. Aside from a $2 decrease implemented in 1986 and a $1 increase in 1991, the composite rates have not changed. When accounting for inflation, therefore, the real payment per treatment has declined substantially. The Omnibus Budget Reconciliation Act (OBRA) of 1990 requires ProPAC to examine the payment for dialysis services and recommend an update factor each year.

Even though the composite rate has changed very little since it was implemented, total Medicare payments to dialysis facilities have increased rapidly. This is largely due to a 10 percent annual growth in the number of beneficiaries receiving dialysis. Rising use of certain extra billable dialysis-related items, among them nonroutine drugs and some diagnostic and laboratory tests, has contributed as well.

Moreover, aggregate Medicare expenditures for all beneficiaries with ESRD (including transplant recipients) have escalated, from 3.8 percent of total program payments in 1985 to 5.0 percent in 1994. This includes spending for acute and post-acute care for other conditions in addition to dialysis-related services. Consequently, aggregate payments per ESRD enrollee rose from $28,158 to $39,431 during this period, while the size of this group grew rapidly (from 0.3 percent of the Medicare population to more than 0.6 percent). In 1994, Medicare payments per person with ESRD were almost nine times greater than for other beneficiaries. This reflects the high annual cost of dialysis as well as the high overall morbidity of these patients.

78

Proposed Payment Changes—Neither the Congress's nor the President's proposal includes an update to the composite rate. Both would, however, extend the Medicare secondary payer provision. Under current law, the 18-month period will revert to 12 months on October 1, 1998. The President proposes to set it at 18 months indefinitely. The Congress would permanently extend it to 30 months.

While these proposals would not affect the composite rate payment methodology, they would achieve savings for the Medicare program. The exact amount of savings is uncertain, but it could be substantial. When the Medicare secondary payer provision was extended from 12 to 18 months (under OBRA 1990), the General Accounting Office (GAO) estimated that Medicare would shift $87 million to employer plans each year.[9] In addition, GAO estimated that dialysis providers would receive $41 million more annually. This is because most private health plans pay on the basis of charges, which generally are substantially higher than Medicare's composite rate.

Update Framework—Dialysis providers have continued to treat a growing Medicare ESRD population, even though the inflation-adjusted payment rate has declined substantially. Moreover, freestanding facilities have prospered, largely because of dramatic gains in productivity that lowered service costs. Between 1983 and 1987, facilities achieved substantial productivity improvements through changes in staffing patterns, the use of high flux and high efficiency dialysis (which led to shorter dialysis sessions), dialyzer reuse, and price discounts from suppliers.[10] Scientific and technological advances, on the other hand, raised per treatment costs by 0.8 percent annually, on average.

Between 1987 and 1991, however, productivity gains had a much smaller effect on the cost per hemodialysis treatment (although still greater than that for scientific and technological advances). During this period, treatment sessions became more intensive, requiring more sophisticated techniques and equipment and a richer mix of staff to monitor patient outcomes. Scientific and technological advances continued to increase per treatment costs, but only by about 0.2 percent annually.

More recent data show that dialysis facilities' costs are rising, though more slowly than inflation in the goods and services they purchase. Medicare costs for both hemodialysis and peritoneal dialysis in hospital-based facilities increased, on average, by 1.4 percent per year from 1991 to 1994. By contrast, ProPAC's market basket index for hospital-based facilities averaged 3.3 percent annual growth over the same time.[11] Medicare costs in freestanding facilities rose by 2.2 percent annually from 1991 to 1993, compared with a 3.7 percent average market basket increase.[12]

On average, Medicare costs in hospital-based facilities were about 45 percent higher in 1994 than those in freestanding facilities. Aggregate Medicare payments to hospital-based facilities covered only

Table 4-12. Payment to Cost Ratios for Hospital-Based and Freestanding Dialysis Facilities, All Dialysis Treatments, 1990-1994

	Hospital-Based Facilities					Freestanding Facilities				
Hospital Category	1990	1991	1992	1993	1994	1990	1991	1992	1993	1994
All	0.86	0.80	0.80	0.77	0.77	1.12	1.13	1.11	1.08	1.05
Rural	0.85	0.79	0.77	0.78	0.78	1.10	1.09	1.07	1.02	0.98
Urban	0.86	0.80	0.80	0.76	0.76	1.12	1.14	1.12	1.09	1.06
Nonprofit	0.85	0.80	0.80	0.77	0.77	1.08	1.06	1.03	1.04	1.05
Profit	1.00	0.85	0.85	0.68	0.68	1.13	1.15	1.13	1.09	1.05
Small	0.72	0.72	0.71	0.64	0.64	1.04	1.04	1.02	0.97	0.92
Medium	0.85	0.77	0.77	0.75	0.75	1.12	1.11	1.09	1.06	1.02
Large	0.91	0.85	0.85	0.80	0.80	1.15	1.18	1.16	1.13	1.10

Note: 1994 ratios are based on estimated payments and costs for freestanding facilities. Includes both hemodialysis and peritoneal dialysis treatments.

SOURCE: ProPAC analysis of Medicare Cost Report data from the Health Care Financing Administration.

77 percent of reported costs (see Table 4-12). By contrast, Medicare payments were approximately 5 percent above freestanding facilities' reported Medicare costs.[13] For both types of providers, larger facilities (those that treated the highest volumes of patients) had lower costs per treatment and therefore better financial performance.

It appears that freestanding dialysis facilities in particular—which account for about 64 percent of all facilities and serve about 69 percent of all dialysis patients—performed well through 1994. As the costs of providing dialysis services have slowly risen, however, Medicare payment to cost ratios have gradually declined. Additionally, cost report data suggest that facilities recently have achieved only modest cost savings through productivity improvements (see Table 4-13). In 1994, hemodialysis treatments per station and total treatments per full-time equivalent employee were no longer increasing as they had in the past, while staffing mix was stable.

Some observers are concerned that continued attempts to achieve productivity gains—primarily through shorter dialysis sessions—may adversely affect the quality of care provided to Medicare ESRD beneficiaries. Adjusted survival rates have improved among dialysis patients in recent years, despite the fact that they are older and sicker than before.[14] Survival has increased for all age, race, ethnic, and diagnosis groups, as well as for all dialytic modalities. But rates still may not be as high as they should.

A measure of dialysis adequacy is Kt/V (the fraction of a patient's total body water cleared of urea during a dialysis session).[15] Recent studies have found that almost 50 percent of hemodialysis patients had a Kt/V of less than 1.0, placing them at higher risk for morbidity and mortality. One reason may be that many patients are not dialyzed long enough. Treatment times fell, on average, from 15 to 18 hours a week in the 1970s to 12 to 15 hours a week in the 1980s. During the early 1990s, average lengths of hemodialysis slipped even further, although recently they have begun to rise. Improved technology may account for shorter treatment times, but economic incentives to save on labor and capital costs as well as patient preferences also contribute to the phenomenon.

Mortality rates for dialysis patients generally are believed to be greater in the United States than in Europe or Japan. Studies have found that the higher mortality in this country cannot be explained by differences in patient age, gender, race, or the presence of diabetes. These studies, however, continue to be limited by inadequate measures of patient severity.

More definitive studies are needed, but recent evidence suggests that treatment factors heavily influence mortality rates. For example, prescribed

Table 4-13. Median Productivity Indicators for Hospital-Based and Freestanding Dialysis Facilities, 1990-1994

Facility Type	Total Treatment Per FTE	Staff Mix	Hemodialysis Treatments Per Station	Length of Dialysis (In Hours)	Dialyzer Reuse
Hospital-based					
1990	550	0.67	599	4.5	—
1991	561	0.64	618	4.5	—
1992	563	0.64	621	4.5	—
1993	587	0.63	645	4.5	—
1994	588	0.63	642	4.5	—
Freestanding					
1990	659	0.33	539	4.5	9.1
1991	625	0.35	555	4.5	10.0
1992	633	0.34	566	4.5	11.2
1993	617	0.35	563	4.5	12.0

Note: 1994 data are not available for freestanding facilities. FTE = full-time equivalent. Staff mix = ratio of registered nurses to all direct patient care staff, including registered and licensed practical nurses, nursing assistants, and technicians. Dialyzer reuse measures average number of times dialyzers are reused.

SOURCE: ProPAC analysis of Medicare Cost Report data from the Health Care Financing Administration.

80

Kt/V in Europe appears to be higher than in the United States, and dialyzer reuse—which may decrease urea clearance—is less common in other countries.[16] Nations also differ in the extent to which they use in-facility hemodialysis, which has been associated with a lower survival rate compared with peritoneal dialysis. Even within the United States, the relative use of these modalities varies among facility types. This reinforces the concern that treatment variation may be driving differences in mortality rates.

ProPAC's ongoing analysis of dialysis costs indicates that input prices can be expected to rise by about 3.2 percent between fiscal years 1996 and 1997. Scientific and technological advances are expected to increase per treatment costs by 0.7 percent over the same period.[17] Although this industry is not likely to repeat the marked productivity improvements experienced in the 1980s, the Commission believes that gains consistent with the hospital industry can be achieved.

Despite rising costs and declining financial performance, the number of dialysis providers continues to grow by about 6 percent per year. This may reflect the continued increase in the number of ESRD beneficiaries. However, freestanding facilities—particularly proprietary ones—have grown by about 9 percent annually, a rate much faster than that for hospital-based providers.

Many industry experts have raised concerns about whether this industry can continue to provide quality dialysis services without higher payments. There is no conclusive evidence that the quality of care has actually declined or that there are quality differences across facility types. Nonetheless, recent studies indicate that a substantial percentage of hemodialysis patients in the United States may be underdialyzed and that treatment is a major factor affecting patient outcomes. If facilities must extend treatment times to ensure that Medicare patients receive adequate dialysis, their costs are likely to increase further.

Hospital Outpatient Services

Medicare payments for many hospital outpatient services are based at least partially on the providers' reasonable costs of furnishing the service. For certain ambulatory surgeries, radiology services, and diagnostic procedures, the total payment is the lowest of the hospital's reasonable costs, charges, or a blended amount that combines the lesser of costs or charges with a prospective payment amount for the same service in another setting. Payment for some other services, such as clinic and emergency room visits, is the lesser of the hospital's costs or charges. Still others (laboratory tests, for example) are paid for using a fee schedule, without regard to the provider's actual costs.

The use of multiple payment methods not only creates conflicting incentives for hospitals, but imposes an administrative burden. Moreover, different payment methods and amounts are applied for the same service across sites of care. This may inappropriately influence the choice of treatment setting.

In addition, cost-based payment methods provide weak incentives to constrain the cost and volume of services furnished. As a result, Medicare outlays for hospital outpatient services have increased rapidly. In response, the Congress mandated in OBRA 1990 that the Secretary of Health and Human Services develop a prospective payment system for hospital outpatient services. The Secretary's report, released in 1995, recommended implementation of prospective payment in several phases.[18] In its response to that report, the Commission expressed concern about several issues.

First, if prospective payment were implemented on an incremental basis, hospitals and Medicare would bear the costs associated with adopting a new payment system while receiving few of the desired benefits. Partial implementation would do little to promote simplicity or predictability of payment, or to reduce the administrative burden on hospitals or the program. Such a policy also would create opportunities for providers to increase their revenues by altering billing practices or reallocating overhead costs to services that remain under cost-based payment. Second, even a comprehensive prospective payment system would retain fee-for-service payment, with little incentive for providers to control the burgeoning volume of services.

Given these concerns, the Commission recommended that the incremental hospital outpatient prospective payment system proposed by the Secretary not be enacted. ProPAC continued to support the concept of a comprehensive payment system

for hospital outpatient services, but recommended that the Congress require the Secretary to submit a fully detailed legislative proposal for implementing such a system. In addition, the Commission recommended coupling prospective payment with a strategy to control the growth in overall outpatient service volume. As most outpatient services can be provided in multiple settings, imposing volume controls only on hospital outpatient services probably would shift them to other sites.

Beneficiary Liability—Because Medicare payments for hospital outpatient services are based partially on costs, final payments are not known until providers' annual cost reports are settled. Consequently, under current law, the beneficiary copayment is set at 20 percent of charges rather than 20 percent of the total payment, as it is for other Part B services.

Basing copayments on hospital charges results in savings to the Medicare program. Since beneficiary liability is subtracted from the total payment to determine Medicare's contribution, rising copayments defray some program spending. At the same time, however, charge-based copayments impose an ever-greater financial burden on Medicare enrollees who use hospital outpatient services. Moreover, this burden is increasingly uneven across types of services and settings.

According to the most recent estimates, beneficiaries are responsible, on average, for 37 percent of the total payments to hospitals for Medicare-covered outpatient services. For certain surgeries, radiology, and diagnostic procedures, beneficiaries pay about 53 percent of the total. For other cost-based outpatient services, it is about 30 percent. These shares are considerably higher than if the same services were provided in other ambulatory settings.

These differences in cost sharing unfairly penalize beneficiaries who receive care in hospital outpatient facilities. In addition, they provide strong incentives for physicians, acting on behalf of patients, to choose a site of care on the basis of financial considerations rather than clinical appropriateness. These incentives are mitigated for many beneficiaries because they have supplemental insurance policies or are eligible for Medicaid benefits that cover most copayments. About 11 percent of Medicare beneficiaries, however, lack such coverage. Those who have private policies indirectly carry the growing burden of cost sharing through rising insurance premiums. Setting beneficiary copayments at 20 percent of payments instead of 20 percent of charges would increase program spending, but would eliminate this source of adverse incentives and growing inequity in the payment burden.

Formula-Driven Overpayment—Medicare's share of the payment for certain ambulatory surgeries, radiology services, and some diagnostic services is supposed to be the total amount minus the beneficiary copayment. For facilities paid the blended amount, however, program payments are not reduced by the entire copayment.[19] Thus, total payments to hospitals for outpatient services are higher than the Congress intended. In addition, this problem with the formula provides a strong incentive for hospitals to raise charges, which increases beneficiary liability and total payments to hospitals.

ProPAC previously recommended changing the formula so that the beneficiary copayment is subtracted after the total amount is calculated. This correction would result in savings for Medicare, which should be used to offset spending increases caused by reducing beneficiary copayments.

Proposed Payment Changes—The Congress's proposal would correct the formula-driven overpayment in a manner that is consistent with past ProPAC recommendations. However, it does not address prospective payment for hospital outpatient services or the issue of beneficiary liability. The President's proposal contains no provision regarding Medicare payment for hospital outpatient services.

Conclusions and Recommendations

The Commission's analyses of Medicare policies regarding ambulatory care providers have focused on dialysis facilities and hospital outpatient departments not only because of ProPAC's statutory obligations, but also because these facilities account for the vast majority of Medicare outpatient spending. In making recommendations, however, the Commission is mindful of how changes to Medicare's payment policies will affect other ambulatory care providers and expenditures for other services.

82

Recommendation 24: Update to the Composite Rate for Dialysis Services

> **The Secretary should develop methods to control total Medicare per capita expenditures for ESRD beneficiaries. In the meantime, the composite rate should be updated by 2.7 percent for hospital-based dialysis facilities and by 2.0 percent for freestanding facilities for fiscal year 1997. The Secretary should also develop reliable measures of patient severity and outcomes to analyze the relationships among treatment processes, patient outcomes, and costs. These factors should be considered in evaluating the need for and the level of future payment updates.**

The rapid growth in total Medicare spending for ESRD beneficiaries is a major concern. A large part of this increase is due to an expanding ESRD population. But these beneficiaries are also using more acute inpatient, skilled nursing, home health, and dialysis-related services than ever before. A comprehensive payment method that encompasses a broader set of services should be explored. Capitation has been successful in controlling expenditure growth for other populations. Most ESRD beneficiaries, though, are not eligible to enroll in the Medicare risk program. The Secretary should either open enrollment to this group or consider implementing a separate capitation program. At a minimum, utilization review or other managed care techniques should be used to control the total volume of services provided to ESRD beneficiaries across all sites of care.

Until major policy changes are made, Medicare should consider the adequacy of its current payment rates. Unlike program payments to other types of health care providers, the composite rate for outpatient dialysis services is not updated annually. That Medicare treats dialysis facilities differently is of some concern. This is heightened by the fact that neither the Congress's nor the President's proposal contains a provision to update the composite rates. Under these proposals, dialysis facilities would not receive payment increases for the next seven years.

Dialysis facilities have treated a growing Medicare ESRD population, even though the inflation-adjusted payment rate has declined substantially. The Medicare program is responsible for making certain that payments for services furnished to its beneficiaries are adequate to ensure quality care. Recent evidence suggests that input costs are rising and that large productivity gains may no longer be possible. Consequently, these facilities may be unable to continue to provide quality dialysis services without a payment rate increase. Given widespread concern about the quality of dialysis services, the composite rate should be updated as suggested by ProPAC's update framework. Differential updates would help to account for cost differences between hospital-based and freestanding facilities. Further, the Secretary should closely monitor treatment patterns and patient outcomes to ensure that facilities use the payment increase to improve quality of care.

Recommendation 25: Prospective Payment for Hospital Outpatient Services

> **A comprehensive prospective payment system should be developed for hospital outpatient services. Such a system should include a strategy for controlling the volume of ambulatory services.**

A prospective payment system for all hospital outpatient services should be implemented as soon as possible. Prospective payment would create incentives for controlling costs by offering providers the opportunity for profits as well as the risk of financial loss. Because almost all services provided in the hospital outpatient setting can be obtained in other ambulatory settings, the Secretary should strive to create consistent payment policies across all sites and providers.

ProPAC analyses indicate that much of the rise in Medicare spending for outpatient services is due to rapid increases in utilization. To constrain future growth in outpatient service use, a strategy for limiting use should be developed. Imposing volume controls on hospital outpatient services only, however, probably would lead to a shift in use to other sites. Ultimately, therefore, volume control methods should apply to all ambulatory care settings.

Recommendation 26: Beneficiary Liability for Hospital Outpatient Services

> **The growing financial burden for Medicare enrollees who receive services in hospital**

outpatient departments should be alleviated immediately. Beneficiary coinsurance for these services should be limited to 20 percent of the Medicare-allowed payment, as it is in other settings. For services not paid on a prospective basis, the Secretary should establish a new method for determining beneficiary copayments based on estimated allowed payments since they cannot be calculated precisely when services are delivered.

Under current law, the beneficiary's copayment for hospital outpatient services is 20 percent of charges rather than 20 percent of the total payment, as it is for virtually all other Part B services. Because hospital charges generally are higher than total payments, beneficiaries are responsible for substantially more than 20 percent of total payments. In addition, because hospitals' charges have grown more rapidly than total payments, beneficiary cost sharing has increased disproportionately. If this continues, the beneficiary's share of outpatient payment soon will overtake the program's share.

Beneficiary liability for hospital outpatient services is higher than it would be if the services were provided in another setting. Such differences in cost sharing unfairly penalize beneficiaries who receive care in hospital outpatient facilities.

Until a prospective payment system is implemented, copayments should be based on estimated payments. This could be done in several ways. Copayments could equal a lower percentage of charges, for example. Alternatively, HCFA could use an estimate of each hospital's payment to charge ratio, to determine the coinsurance amount for each service.

Reducing beneficiary coinsurance would raise Medicare outlays. The Commission therefore recommends that the reduction in program payments resulting from correcting the blended payment formula, as specified in the Congress's proposal, partially offset this increase. If necessary, the change in beneficiary liability could be phased in over several years.

Notes to Chapter 4

1. The Medicare provisions passed by the Congress are in H.R. 2491, the "Balanced Budget Act of 1995." The Medicare provisions of the President's proposal are in Title II of draft legislation, called the "Balanced Budget Act of 1995 for Economic Growth and Fairness." Released on December 7, 1995, it has not been introduced in the Congress.

2. Rehabilitation and psychiatric distinct-part units newly certified by Medicare are exempt from TEFRA limits only for their first full 12-month cost reporting period. The first full year of operation is designated as the base year for these facilities.

3. The only restriction on ancillary service costs, other than meeting Medicare's definition of reasonableness, is that when physical and respiratory therapy services are provided "under arrangement" by an external facility, the therapists' salaries must be below HCFA's state-level salary guidelines.

4. In the lawsuit, Fox v. Bowen, 656 F. Supp. 1236 (D. Conn. 1986), the Court held that the Secretary's practice of using arbitrary rules to deny physical therapy benefits delivered by SNFs violated Medicare statutes and regulations and the due process clause of the U.S. Constitution. MCCA removed the prior hospital stay requirement, decreased the SNF copayment, and broadened coverage by changing the maximum benefit to 150 days per year.

5. The nonroutine cost limits would be calculated by determining the average costs *per stay* of nonroutine services during the last (12-month) cost report submitted on or before December 31, 1994. This amount would then be updated by the SNF market basket to fiscal year 1996 and multiplied by the number of stays that the SNF had during the year. Per stay amounts would be updated by the SNF market basket minus 2 percentage points in fiscal year 1997 and in each subsequent year until the implementation of the prospective payment system. Estimates of Medicare Part B payments for SNF services provided to beneficiaries eligible for Part A during the 1994 cost reporting period would be included in the facility-specific limits. In addition, facilities that did not submit a cost report in 1994 would be assigned *per stay* limits based on the national average cost for nonroutine services.

6. Health Care Financing Administration, Office of the Actuary.

7. As the number of kidney transplants performed and graft survival rates has risen over time, the proportion of all Medicare ESRD beneficiaries with a functioning transplant has increased—from 10.8 percent in 1978 to 22.0 percent in 1991. Still, dialysis patients accounted for a large majority of ESRD enrollees in 1991.

8. The payment limit was increased to $139 under OBRA 1990.

9. U.S. Congress, General Accounting Office, *Medicare: Impact of OBRA-90's Dialysis Provisions on Providers and Beneficiaries*, GAO/HEHS-94-65 (Washington, DC: U.S. Government Printing Office, April 1994).

10. Project HOPE's Center for Health Affairs, *Identifying Changes in the Factors of Production for Dialysis Services*, ProPAC Extramural Technical Report, No. E-93-01, March 1993.

11. ProPAC's dialysis facility market basket contains four cost components—capital, labor, other direct costs, and overhead. Because cost shares for these components differ for hospital-based and freestanding facilities, the Commission developed separate market baskets. Price proxies were derived from the components of HCFA's input price indexes for PPS hospitals, skilled nursing facilities, and home health agencies.

12. HCFA introduced a new cost report for freestanding dialysis facilities effective for cost reporting periods beginning on or after October 1, 1993 (fiscal year 1994 and after). The revised cost report corrects for certain errors that led to data quality problems. Unfortunately, the 1994 data for these facilities were not available for ProPAC's analysis.

13. The composite rate is intended to cover the portion of facility costs that is allowable in accordance with Medicare principles of reimbursement. HCFA's audit of fiscal year 1991 cost reports found that Medicare-allowable costs in freestanding dialysis facilities were 12.2 percent lower than reported costs, whereas those in hospital-based facilities were 4.6 percent lower. After adjusting reported costs by HCFA's audit correction factors, payment to cost ratios are substantially higher.

14. Project HOPE's Center for Health Affairs, *Quality of Dialysis in the United States*, ProPAC Extramural Technical Report, forthcoming.

15. Kt/V (where *K* is the dialyzer clearance of urea, *t* is the time of dialysis, and *V* is the patient's urea volume) measures the intensity of dialysis relative to the patient's size, describing the fractional removal of urea.

16. Past studies found that inadequate manual reprocessing of dialyzers was associated with a higher risk of morbidity and mortality, although this no longer appears to be a problem.

17. Each year, ProPAC estimates how Medicare costs are affected by the dialysis industry's adoption of new cost-increasing, quality-enhancing scientific and technological advances. The Commission's most recent analysis indicates that these innovations will raise facilities' total operating and capital costs by $26.6 million, or 0.7 percent, in fiscal year 1997. Abt Associates, *The Incremental Impact of Scientific and Technological Advances on Cost Increases in Dialysis Facilities*, ProPAC Extramural Technical Report, No. E-96-01, January 1996.

18. U.S. Department of Health and Human Services, *Report to Congress: Medicare Hospital Outpatient Prospective Payment*, March 17, 1995.

19. The blended amount is determined by a two-part formula: the hospital-specific portion (the lesser of costs or charges minus 20 percent of charges) and the prospective portion (80 percent of the applicable prospective rate). The prospective rate for ambulatory surgery is the amount for the relevant procedure category used to pay freestanding ambulatory surgical centers. For radiology and diagnostic services, it is that portion of the physician fee schedule intended to represent the technical expense of providing that service.

    The second part of the forumula inappropriately assumes that 20 percent of the prospective rate equals 20 percent of charges (the copayment). In fact, charges are usually much higher than the prospective rate. Because the full contribution of beneficiary cost sharing is not captured, Medicare's share of hospital payments is overstated.

Appendix A. Technical Report Series

Appendix A lists the Prospective Payment Assessment Commission's (ProPAC's) extramural and intramural technical reports. These reports provide documentation related to the Commission's March and June annual reports to the Congress. The congressional reports are prepared upon request by the Congress. Each technical report is numbered according to type and year of publication. Numbers missing from the sequence refer to studies that have been replaced with more recent reports. Commission reports can be obtained from the Prospective Payment Assessment Commission, 300 7th Street, S.W., Suite 301B, Washington, D.C. 20024, or by calling the office at 202/401-8986.

EXTRAMURAL TECHNICAL REPORT SERIES

E-87-01: Improving the Definition of Hospital Labor Market Areas and Wage Indexes (Abt Associates, Inc.)

Methods for improving the definition of hospital labor market areas were investigated. This report identifies urban and rural labor market areas with the greatest amount of wage variation. It also examines the sources of wage variation within current labor markets and possible improvements in the area wage adjustment. Appended are step-by-step instructions for assigning hospitals within metropolitan statistical areas to urbanized areas as defined by the Bureau of the Census. (formerly E-87-12)(2/87)

E-87-03: Measures of Complexity of Illness Within DRGs (SysteMetrics/McGraw-Hill, Inc.)

The goal of this research was to refine the Commission's method of monitoring continuing changes in DRG case mix and case complexity (changes within DRGs). This study refines the Commission's methodology for estimating the annual component of real case-mix change within DRGs. The methodology was used to develop annual estimates of within-DRG case-mix change for Medicare patients from 1984 to 1986. It was also used by the Commission to estimate this component of real case-mix change in future years as additional Medicare data became available. Estimates from this study were used to analyze the indirect medical education adjustment. (3/89)

E-87-06: Assessing the Adequacy of the Medicare Cost Report Data (SysteMetrics/McGraw-Hill,Inc.)

This report provides information on perceived strengths and weaknesses of the Medicare Cost Report. Hospital financial officers, fiscal intermediaries, and industry representatives were surveyed. In general, the results of this study indicate that most hospitals believe that the cost report is acceptable as a reimbursement tool. Most hospitals thought, however, that the cost report does not accurately measure the cost of care for Medicare beneficiaries because bad debt, charity care, patient telephones, and so forth are not recognized. PPS has resulted in changes in reporting practices. Particular attention is given to passthrough items like capital and direct medical education. (4/88)

E-87-08: Trends in the Concentration of Six Surgical Procedures Under PPS and Their Implications for Patient Mortality and Medicare Cost (Project HOPE)

This report examines trends in hospitals' volumes of six specialized surgical procedures and the impact of those trends on mortality and costs. The six procedures are coronary artery bypass grafting, total hip replacement, abdominal aneurysm repair, intestinal resection, transurethral prostatectomy, and carotid endarterectomy. (6/88)

E-87-11: Small Isolated Rural Hospitals: Alternative Criteria for Identification in Comparison with Current Sole Community Hospitals (SysteMetrics/McGraw-Hill, Inc.)

This study determines how many facilities become eligible for sole community hospital (SCH) status. The contractor also examines how the distribution of SCHs would change if the SCH criteria were altered. This study also provides information used to analyze the financial vulnerability of small isolated rural hospitals. (6/88)

E-88-01: Subacute Care in Hospitals: Synthesis of Findings from the 1987 Survey of Hospitals and Case Studies in Five States (Lewin/ICF)

This document is the final report of an 18-month study of subacute care in hospitals, often referred to as transitional care. Results of a representative national survey of hospitals are presented, along with findings from case studies in five states (California, Louisiana, New York, North Carolina, and Washington). Information is also presented on other types of transitional care, such as home health and skilled nursing care. (9/88)

E-88-02: An Analysis of Hospital Sensitivity to DRG Price Variation in the Medicare Prospective Payment System (SysteMetrics/McGraw-Hill, Inc.)

This study provides information on whether hospital behavior in rendering care and assigning resources is sensitive to differences between hospital costs and PPS prices. The contractor interviewed health care consultants and hospital administrators to identify the extent and objectives of hospital strategies to concentrate in or discontinue selected services. Second, the contractor assessed whether these strategies were in direct response to variations in the DRG prices or other factors influencing hospital management. Third, it examined the use of product line management and service costing in hospitals' responses to DRG price variations. (8/88)

E-89-01: Urban and Rural Cost Differences: Literature Synthesis and Review (SysteMetrics/McGraw-Hill, Inc.)

The reasons for differences in urban and rural hospitals' costs per case are synthesized from current research in this report. Specifically, the basis for the lower costs of rural hospitals compared with urban hospitals is explored, and further research suggested. (3/89)

E-89-02: Treatment of Certain Hospital Labor Expenses in the PPS Market Baske (SysteMetrics/McGraw-Hill, Inc.)

This report examines certain hospital labor expenses not directly measured by the PPS market basket (contract labor, employee bonuses, recruitment costs, employee benefits, overtime and part-time employment, and changes in employee skill mix). The project examines how these costs are currently measured in the market basket and changes in these expenses between 1985 and 1988. Estimates were made of the effect these labor expenses would have on market basket increases if the expenses were directly measured in the market basket wage component. The calculations of the Average Hourly Earnings for Non-Supervisory Hospital Workers and the Employment Cost Index for Hospitals are also described in the study. (2/89)

E-90-01: The Relationship Between Declining Use of Rural Hospitals and Access to Inpatient Services for Medicare Beneficiaries in Rural Areas (Codman Research Group, Inc.)

This study examines hospital utilization patterns for Medicare beneficiaries living in defined rural and urban hospital market areas of five states—Alabama, California, Illinois, Montana, and Texas—from 1984 to 1986. The study examines Medicare beneficiary care according to the market area where the beneficiary lives. Cases are divided into eight DRG groups to examine whether access is impaired for some services and not others. The study also examines how these changes in utilization affect admissions and market share of rural and urban hospitals. (1/90)

E-90-02: Alternative Hospital Market Area Definitions (SysteMetrics/McGraw-Hill, Inc.)

This report examines alternative methods for defining hospital market areas through an extensive literature search and contact with experts in the field. The study reviews the role market areas play in PPS. It also reviews numerous alternatives that have been used for defining market areas, exploring options that have not been used for hospitals. Finally, the study provides an evaluation of the alternative methodologies and their potential applicability to PPS for defining hospital labor and product markets. (3/90)

E-90-04: The Dynamics of Hospital Services Changing Patterns in the Services Provided by Hospitals from 1980 to 1987 (Kirsten Iversen)

The level of services and facilities provided by hospitals is dynamic, changing over time and across settings. This analysis describes patterns in the

changing levels of services provided by different groups of hospitals from 1980 to 1987. (3/90)

E-90-05: Methodology for Measuring Case-Mix Change: How Much Change in the Case Mix Is DRG Creep? (The RAND Corporation)

ProPAC assisted the Health Care Financing Administration in a medical record reabstraction study. This study develops a method to distinguish case-mix increases caused by changes in coding practices from changes in treatment patterns and patient mix. It also provides information for developing and refining alternative ongoing data collection methods to monitor case-mix change over time. The Commission helped fund this project and provided support in designing, implementing, and monitoring the study. (4/90)

E-90-07: How Services and Costs Vary by Day of Stay for Medicare Hospital Stays (The RAND Corporation)

This study describes how the cost of services provided during Medicare hospital stays varies throughout the stay. It also examines how patterns of daily costs vary with clinical characteristics, hospital characteristics, and the types of services provided. The study was based on data on the daily services billed to Medicare patients between May 1987 and April 1988 from a sample of 105 hospitals, and was the first time such data had been used in this way. (3/90)

E-90-08: Comparative Analysis of Annual Survey and Medicare Cost Report Margin Data (American Hospital Association)

This study presents the results of a comparative analysis of total hospital margin data derived from a matched sample of Medicare Cost Reports and corresponding American Hospital Association (AHA) annual surveys. Initially, the national average Medicare Cost Report margin was significantly higher than the corresponding annual survey margin. After editing, however, the cost report margin was found to be slightly lower than the AHA figure. A telephone survey was used to investigate the reasons for the cost report/AHA discrepancies. The study analyzes the discrepancies by type of hospital and categorizes the reasons they occur. The study concludes that properly edited cost report income statement data are usable in research applications. Only one source of bias was documented as significantly affecting calculation of average total margins by hospital group. This was the failure of some public hospitals to report government subsidies as revenue on their Medicare Cost Reports. (9/90)

E-90-09: Hospital Cost Variations Under PPS (Center for Health Policy Studies, Georgetown University)

This study explores the impact of PPS and other factors in accounting for variations in total costs among hospitals during the 1980s. The goal was to understand the extent to which PPS has affected hospital costs, and the mechanisms that have produced those effects. The impact of PPS was isolated by analyzing a time-series of cost data for a sample of hospitals, while controlling for the effects of other factors, such as input prices, mix of outputs, volume of outputs, local competition, and health insurance coverage. The study also focuses on the roles of staffing, service mix, patient volume, and financial pressure to identify the mechanisms that have operated to produce PPS effects. These analyses were conducted separately for all sample hospitals and for important subgroups of the hospital industry, including urban and rural hospitals. (9/90)

E-91-01: Classification Systems for PPS-Excluded and Non-PPS Providers (Project HOPE)

This study provides an overview and evaluation of systems that measure the case mix or resource complexity of patients treated in hospitals excluded from Medicare's PPS or patients treated by non-PPS providers. PPS-excluded hospitals include psychiatric and rehabilitation hospitals and distinct-part units as well as children's, long-term, and cancer hospitals. Non-PPS providers include home health agencies and skilled nursing facilities. The report identifies and describes available research on patient classification systems, case-mix measurement systems, and payment systems for each type of provider. Each system is evaluated using a set of criteria related to patient classification such as administrative feasibility, ability to explain variations in resource use, and clinical validity. Other criteria are applied to the evaluation of payment systems. Among the criteria used are administrative feasibility, equity of the system, and system effectiveness. (1/91)

E-91-02: Study of Health Care Access in Counties Where the Only Hospital Closed (Abt Associates, Inc.)

This report describes a study of access to health services in 22 rural counties where the only hospital closed between 1987 and 1989. These counties are compared with a similar group of counties that did not have a hospital between 1980 and 1989. Access to health care services is evaluated on two dimensions. First, distances and travel times (from the population center of each county) to the nearest hospitals in contiguous counties are identified, and second, the types and numbers of health care providers (facilities and practitioners) in each of the counties are noted. This was accomplished using telephone surveys of county health department personnel and analysis of the Area Resource File. (5/91)

E-91-03: Utilization of Inpatient Hospital Services by Rural Medicare Beneficiaries (Codman Research Group, Inc.)

This study updates a previous analysis (E-90-01) on inpatient hospital utilization for Medicare beneficiaries living in rural and urban market areas of five states: Alabama, California, Illinois, Montana, and Texas. The analysis expands on the earlier study by looking at utilization patterns for rural beneficiaries using refined DRG case-type groupings and by separately examining utilization patterns for younger and older Medicare beneficiaries. The findings from the analysis are consistent with the earlier study, in that access to inpatient hospital services does not appear too constrained for rural Medicare beneficiaries. The study, however, raised concerns about access to ambulatory care in these communities. (5/91)

E-91-04: Volume Adjustments Used in State Medicaid Programs and Rate Setting Systems (Abt Associates, Inc.)

This report presents information about volume adjustments used to adjust payments to hospitals by state Medicaid programs. The contractor surveyed states to determine the number that use a volume adjustment, how the adjustment is calculated, eligibility requirements, whether there are upper and lower thresholds for the adjustment, and the formula used to calculate the adjustment. The contractor also laid out a theoretical framework for considering volume adjustments, and outlined the relationships between policy goals and characteristics of these adjustments. (7/91)

E-91-05: Medicaid Payment Methodologies for Inpatient Hospital Services (Abt Associates, Inc.)

This report describes state Medicaid inpatient hospital payment methodologies in effect as of July 1, 1991. The information was collected through telephone interviews with knowledgeable staff at state Medicaid offices, rate setting commissions, and hospital associations. The survey attempted to identify, describe, and document key concepts used to develop Medicaid payment systems for inpatient hospital services. (8/91)

E-91-06: An Evaluation of Winners and Losers Under Medicare's Prospective Payment System: A Synthesis of the Literature (Lewin/ICF)

This report summarizes the academic and popular literature on (1) hospital characteristics affecting hospital financial performance under Medicare; (2) the design features that affect winning and losing, and how hospitals responded to the incentives of PPS; and (3) the environmental and community characteristics of a hospital's local market that affect hospital financial performance. In addition, it outlines some of the perceived gaps in the literature and includes an extensive bibliography. (10/91)

E-92-01: Certification Requirements for Nursing Homes (Abt Associates, Inc.)

This report presents descriptive information on current Medicaid certification and state licensure requirements for nursing homes. It focuses on those requirements that are expected to impose significant costs on facilities and result in cost variations across states. (3/92)

E-92-02: An Evaluation of Winners and Losers Under Medicare's Prospective Payment System: Final Report (Lewin/ICF)

This report summarizes the findings of a series of case studies conducted by Lewin/ICF examining why, controlling for similar hospital characteristics, some hospitals do well under PPS while others do not. Factors examined include hospital behavior, such as successful management strategies; hospitals'

responses to PPS; and broader environmental factors that shape hospital performance. The degree to which performance is within a hospital's control is discussed. Individual hospital descriptions are not provided. Rather, the report integrates site visit findings and synthesizes the similarities and differences between successful and unsuccessful hospitals. (5/92)

E-92-03: Report on Quality Assurance in Non-PPS Settings (Abt Associates, Inc.)

This study describes mechanisms used to ensure and monitor quality in settings in which Medicare services are reimbursed. Among these are skilled nursing facilities, home health agencies, and hospitals not paid under PPS (psychiatric hospitals and rehabilitation hospitals). The study also looks at quality assurance in selected outpatient facilities, including ambulatory surgical centers, hospital outpatient departments, ambulatory care centers, cardiac catheterization laboratories, freestanding clinical laboratories, dialysis facilities, diagnostic imaging centers, lithotripsy centers, and comprehensive outpatient rehabilitation facilities. Quality assurance mechanisms including certification, accreditation and monitoring by Federal, state, and voluntary organizations are described. Quality indicators are classified by structure, process, or outcome. (8/92)

E-92-04: Within DRG Case Complexity Change in Fiscal Year 1990 (SysteMetrics/McGraw-Hill, Inc.)

ProPAC annually recommends to the Congress an update factor for increasing the standardized payment amounts under PPS. This update factor reflects changes in the cost of providing services, including changes in the cost of hospital inputs; the effects of scientific and technological advances; productivity increases; and changes in the mix of patients that hospitals treat. The distribution of cases across DRGs is captured by the Medicare case-mix index, which directly affects the payment that hospitals receive for each case. This study measures the change in the distribution of cases by complexity level within DRGS. The study uses Medicare data for fiscal years 1988 through 1990 to develop estimates of within-DRG case complexity change and examines changes in coding of secondary diagnoses, both by overall and by hospital group. (4/92)

E-93-01: Identifying Changes in the Factors of Production for Dialysis Services (Project HOPE)

This report describes an historical cost study of the factors of production for outpatient hemodialysis and peritoneal dialysis services. The study examines how the use or cost of inputs changed between 1983 and 1991, and estimates the incremental or decremental impact that the change in each input has on the cost per dialysis treatment. The study focuses on the incremental effects of scientific and technological advances in the dialysis industry and ensuing productivity improvements. (3/93)

E-93-02: Within DRG Case Complexity Change, 1991 (SysteMetrics, Inc.)

This study measures the change in within-DRG case complexity from 1989 to 1990 and from 1990 to 1991. It also examines changes in the number of secondary diagnoses and complications and comorbidities from 1989 to 1991. This information is used for ProPAC's within-DRG case-complexity adjustment. The within-DRG case-complexity adjustment is designed to capture increases in patient complexity that are not measured by the DRGs. It is part of the case-mix adjustment in ProPAC's annual PPS operating and capital update recommendation to the Congress. The case-mix adjustment allows hospital payments to increase for real case-mix change, while removing payment increases that are due to changes in medical record documentation or coding practices. (2/93)

E-93-03: Exploring the Growth of Hospital Outpatient Surgeries (Abt Associates, Inc.)

This report identifies and assesses the principal factors that contributed to the growth observed between 1988 and 1990 in the use of five groups of procedures performed in the hospital outpatient department. The five groups selected were knee arthroscopy, YAG laser, lithotripsy, sigmoidoscopy and colonoscopy, and breast biopsies. These families of procedures were selected because as a group they represented varying levels of complexity, exemplified a variety of clinical problems, were in the top 50 most frequently performed ASC-approved procedures, and had a high growth rate between 1988-90. The factors affecting increased procedure volume were physician practice patterns and treatment approaches, technology requirements, the capacity of physicians and hospitals to

perform the procedure, shifts in setting in which the procedure is performed, and reimbursement practices. (3/93)

E-93-04: Analysis of the Effect of the Economic Stabilization Program (Abt Associates, Inc.)

This report describes the effect of the economic stabilization program (1971-1974) on health care prices and expenditures. Previous studies of the program are reviewed and compared. Additionally, descriptive data on health care expenditures by type of service and program, health care prices, and hospital revenues and expenditures are displayed. (5/93)

E-93-05: State Regulations and Policies that Affect the Provision of Post-Acute Care (Abt Associates, Inc.)

This report presents descriptive information about state regulations and policies that affect the staffing requirements, services provided, and patient mix of Medicare-certified skilled nursing facilities and home health agencies. (5/93)

E-93-06: Development of Hospital Efficiency Measures (Jenifer Ehreth, Ph.D.)

This report evaluates several measures of how efficiently hospitals use their capital assets and compares asset efficiency and hospital financial performance across types of hospitals. Descriptive statistics and factor analysis are used to assess the reliability and validity of several measures over a three-year period. Three measures—the current ratio, the long-term debt to net fixed assets ratio, and an asset efficiency measure using data envelopment analysis techniques—are evaluated in more detail because they appear promising for analyzing the impact of payment policies on asset efficiency. (8/93)

E-94-01: Within DRG Case Complexity Change, 1992 (SysteMetrics, Inc.)

This study measures the change in within-DRG case complexity from 1990 to 1991 and from 1991 to 1992. It also examines changes in the number of secondary diagnoses, complications and comorbidities from 1990 to 1992. ProPAC uses this information to estimate the annual amount of real case mix change within DRGs, which is not measured by the case mix index (CMI). Unlike previous studies of within-DRG case complexity change, this study investigates the long run trend for within-DRG case complexity change between 1985 and 1992, by hospital group. Potential explanations for the observed long run trend are discussed. (3/94)

E-94-02: The Incremental Impact of Scientific and Technological Advances on Operating Costs in PPS Hospitals and PPS-Excluded Facilities (FY 1995) (Abt Associates, Inc.)

This report provides supportive material for one component of ProPAC's update recommendations to the Congress: the allowance for scientific and technological advances (S&TA). It details the revised approach to estimating incremental costs attributable to technological change projected for fiscal year 1995. Two S&TA estimates were developed: one for changes in operating costs incurred by PPS hospitals and another for facilities excluded from PPS that are subject to the payment system established in the Tax Equity and Fiscal Responsibility Act of 1982. (1/94)

E-94-03: The Incremental Impact of Scientific and Technological Advances on Capital Costs in PPS Hospitals (FY 1995) (Abt Associates, Inc.)

This report provides supportive material for one component of ProPAC's PPS capital update recommendation to the Congress: the allowance for scientific and technological advances. It details the revised approach to estimating incremental capital costs attributable to technological change projected for fiscal year 1995. (1/94)

E-94-04: The Incremental Impact of Scientific and Technological Advances on Cost Increases in Dialysis Facilities (FY 1995) (Abt Associates, Inc.)

This report provides supportive material for one component of ProPAC's composite rate update recommendation to the Congress: the allowance for scientific and technological advances. It details the revised approach to estimating incremental costs attributable to technological change projected for fiscal year 1995. (1/94)

E-94-05: Discussion Report: Assessing the Impact of Cost-Decreasing Technological Change on Medicare Inpatient Costs (Abt Associates, Inc.)

To support its PPS payment update recommendations submitted to the Congress each year,

ProPAC uses a technology-specific methodology to assess changes in the cost-increasing effects of emerging technologies. This report provides discussion of the feasibility of applying this methodology to an analysis of the financial impact of cost-decreasing technologies used in the care provided to Medicare beneficiaries in the inpatient setting. (7/94)

E-94-06: Discussion Report: Assessing the Cost Impact of Technological Change on Medicare and Non-Medicare Populations Across Settings (Abt Associates, Inc.)

To support its PPS payment update recommendations submitted to the Congress each year, ProPAC uses a technology-specific methodology to assess changes in the cost-increasing effects of emerging technologies. The methodology is specific to the technologies used in the care provided to Medicare beneficiaries in the inpatient setting. This report provides discussion of the feasibility of applying this methodology to an analysis that would consider changes in the cost of technologies used in the care of Medicare and non-Medicare beneficiaries across settings: in the inpatient setting as well as other sites of care, including nursing homes, outpatient departments, and home health agencies. (7/94)

E-94-07: Medicaid Reimbursement Methodologies and Payment Rates for Home Health Agencies (Abt Associates, Inc.)

This study presents survey results on state Medicaid programs' reimbursement methodologies and payment rates for home health care services. Information is presented in table format for each service (skilled nursing; physical, speech, and occupational therapies; medical social services; and home health aides). Each table includes information on the following items: payment rates; rate-setting methodologies; whether the rate is agency-specific, class-based, or flat; cost components that are treated separately in the payment process; and payment update factors. (1/94)

E-94-08: Quality-Oriented State Licensing Requirements for Non-PPS Facilities (Abt Associates, Inc.)

This two-volume study presents survey results on state licensing requirements for 15 long-term care, home health, and ambulatory care providers. Information is presented on state standards for organizational structure and administration, personnel, service provision, medical documentation, internal quality assurance processes, minimum access and transfer affiliations, equipment, and certificate of need. Licensure requirements that differ from Medicare certification are emphasized. (7/94)

E-95-01: A Comparison of Cost Definitions (Project HOPE)

This report provides a comparison of cost definitions between Medicare principles of reimbursement and generally accepted accounting principles. It documents cost items pertaining to acute care hospital services and outpatient dialysis services that are nonallowable in accordance with Medicare payment policy. In addition, the report discusses providers' contests of Medicare's determination of allowable costs, where applicable, and the results of those cases. (2/95)

E-95-02: Medicaid Managed Care Program Access Requirements (Project HOPE)

This report examines seven states' strategies for ensuring access to health services for Medicaid-eligible people who are enrolled in managed care plans. It summarizes approaches states are using to ensure that enrollees receive medically appropriate services without facing geographic, cultural, or linguistic barriers to care. This report presents information gathered from both state Medicaid agencies and Medicaid managed care contractors. (4/95)

E-96-01: The Incremental Impact of Scientific and Technological Advances on Cost Increases in Dialysis Facilities (FY 1997) (Abt Associates, Inc.)

Each year, ProPAC recommends to the Congress an update to the composite rate for dialysis services. The Commission's update framework includes an allowance for the incremental impact of scientific and technological advances. This report describes ProPAC's estimate of the increase in operating and capital costs that will result from the diffusion of new and emerging dialysis-related technologies in fiscal year 1997. (1/96)

96

Pending

Quality of Dialysis in the United States (Project HOPE)

This report is a critical review of the current literature relevant to the quality of outpatient dialysis services. It addresses issues related to the epidemiology and treatment of end-stage renal disease, defining and measuring quality of care, assessing patient outcomes, and comparing mortality rates between the United States and other countries. (Forthcoming)

Hospital-Physician Relations: A Multivariate Analysis of Hospital Financial Performance (Project HOPE).

This report will examine the association between hospital-physician relations and hospital financial performance. Data from ProPAC's Hospital-Physician Relations study (I-95-02) were combined with secondary data on hospital market characteristics and hospital financial performance and analyzed using both univariate and multivariate techniques. (Forthcoming)

INTRAMURAL TECHNICAL REPORT SERIES

I-88-02: Recalibration Analysis Comparing Charge-Based and Cost-Based DRG Weights

ProPAC analyzed the two methods of recalibrating the DRG relative weights, using charges only (charge-based) and using charges that are adjusted by costs (cost-based). This report provides a detailed description of the data, methods, and results of ProPAC's comparisons. (3/88)

I-89-03: Review of Medicare Cost Report Data for Policy Analysis

This report summarizes the Commission's work on the use of the Medicare Cost Report data for decision making. The major activity the Commission initiated to identify improvements in the use of existing cost data for policy analysis was to convene a panel to discuss the strengths and weaknesses of the Medicare Cost Report. The report also summarizes ProPAC monitoring of HCFA's three-year demonstration assessing the costs and benefits of adding to the cost report financial and utilization information regarding other payers. (3/89)

I-89-04: Payment Adjustments—Indirect Teaching and Disproportionate Share Hospitals

ProPAC analyzed the effect of teaching effort on Medicare costs. The objectives of the analysis were to estimate the relationship between teaching effort and Medicare cost per case using the most recent Medicare Cost Report data available. ProPAC also examined the overlap between the indirect medical education and the disproportionate share payment adjustments and evaluated the financial impact of revising the indirect medical education adjustment. The report describes the methods and results of the analysis. (7/89)

I-90-01: Medicare-Dependent Hospitals Under PPS

The Omnibus Budget Reconciliation Act of 1989 required the Commission to study the appropriateness of making a Medicare payment adjustment to hospitals that treat a high proportion of Medicare discharges. Information on this topic was also included in ProPAC's June 1990 report, *Medicare Prospective Payment and the American Health Care System.* (6/90)

I-90-02: Adjusting the Area Wage Index for Occupational Mix

Currently, the area wage index does not account for geographic differences in occupational mix. ProPAC studied the effect of adjusting the area wage index for occupational mix and the relationship of occupational mix to case mix. This report describes the methods and results of the analysis. The results include metropolitan statistical area, regional, and urban/rural estimates of the impact. The report also calculates how payments would be affected by adjusting the wage index for occupational mix. (8/90)

I-90-04: Financial Status of High Case Mix Hospitals

The Omnibus Budget Reconciliation Act of 1989 required the Commission to study the financial status of high case mix hospitals with special attention devoted to capital investment. Information on this topic was included in ProPAC's June 1990 report, *Medicare Prospective Payment and the American Health Care System.* (9/90)

I-91-01: Hospital Closures: 1985-1988

This report contains descriptive statistics on hospitals that closed between 1985 and 1988. Data are from the American Hospital Association Annual Survey of Hospitals, Medicare Cost Reports, and the Area Resource File. Rural and urban hospitals that closed are analyzed separately and compared with open rural and urban hospitals having fewer than 200 beds. (1/91)

I-91-02: The Role of Profitability and Community Characteristics in Hospital Closures, an Urban and Rural Analysis

This study investigates hospital closures that occurred from 1985 through 1988. The analysis focuses on the relationship between profitability and closure. Further, the analysis evaluates the impact on profitability of characteristics related to the hospital's mission and standing in the community. In addition, the analysis is extended by examining the factors that influence profitability and its components: revenue per case, cost per case, and total cases. This report provides a detailed description of the data, methods, and results of the study. (2/91)

I-91-03: Improving the Area Wage Index: The Area Wage Index and the Mix of Occupations Across Areas

Currently, the area wage index incorporates differences in the price of labor, as well as the mix of occupations across areas. This report presents the results of ProPAC's study on the effect of adjusting the area wage index for occupational mix. The results are presented separately for metropolitan statistical areas and rural areas. The study is based on Uniform Reporting System data collected from California hospitals. The report also describes the method used in California to collect data by occupational category. (7/91)

I-91-04: The Trend and Distribution of Hospital Uncompensated Care Costs, 1980-1989

This report presents the results of an analysis of uncompensated care costs for both PPS and PPS-excluded hospitals. Uncompensated care for this study is defined as the sum of charity care and bad debts, and uncompensated care costs are measured both with and without an offset for subsidies received from state and local governments. The study is based on data from the American Hospital Association Annual Survey of Hospitals over the period 1980 to 1989. Both the trend and distribution of uncompensated care costs are measured by hospital group. In addition, the relationship between uncompensated care costs and indirect medical education and disproportionate share payments under Medicare is examined. (10/91)

I-92-01: Winners and Losers Under PPS

Although the aggregate margin of hospitals under PPS has declined, some hospitals continue to perform well. In this report, ProPAC analyzes the characteristics of hospitals with consistently high and consistently low margins under PPS in 1986, 1987, and 1988. The characteristics are broken into three groups: payment adjustments, factors within the hospital's control, and factors outside of the hospital's control. The focus of the study is to determine the relative role of these factors in performance under PPS. This report provides a detailed description of the data, methods, and results of the study. (6/92)

I-92-02: The Effect of the OBRA 1989 Payment Provisions for Small Rural Medicare-Dependent Hospitals

In 1989 and 1990, ProPAC analyzed the financial status of hospitals with high Medicare shares. The ProPAC analysis, described in *Medicare-Dependent Hospitals Under PPS* (TRS I-90-01), indicated that the classification of hospitals into groups based on Medicare dependence is arbitrary and inconsistent over time. Further, although hospitals with high Medicare shares tend to perform more poorly under PPS, this poor performance appears to be related to characteristics other than Medicare share, notably low occupancy rates and long average lengths of stay. Based on these findings, the Commission recommended that no payment adjustment be made for Medicare-dependent hospitals. In the Omnibus Budget Reconciliation Act (OBRA) of 1989, Congress provided special treatment under PPS for small rural Medicare-dependent hospitals for three years (cost reporting periods beginning on or after April 1, 1990, and ending on or before March 31, 1993). This provision expired in 1993. However, the Congress extended it through fiscal year 1994. This report describes an analysis of the financial performance of small rural Medicare-dependent hospitals as defined in OBRA 1989 and

the impact of the special provision on Medicare payment of these hospitals. (7/92)

I-93-01: The Accuracy of Cost Measures Derived from Medicare Cost Report Data

This report summarizes the findings and policy implications of a study conducted by the Center for Health Policy Studies. The primary objective of the study was to assess the accuracy of the hospital-level and DRG-level cost measures that can be constructed using Medicare Cost Report data. The first part of the study tested the impact of potential refinements in the Medicare Cost Report cost finding approach, such as using a standard cost center configuration or a multiple allocation technique. These types of changes were found to have relatively little impact. The second part compared values from advanced hospital cost accounting systems with values from the cost reports of the same hospitals. Substantial differences were documented for total Medicare costs, routine and ancillary costs, and average cost per case by DRG. (3/93)

I-95-01: The Relationship Between Hospital Costs and Payments by Source of Revenue, 1980-1991

This report presents an analysis of community hospital losses and gains by source of revenue, including Medicare, Medicaid, uncompensated care, private payers, and non-patient revenue. The data for the analysis are from the American Hospital Association Annual Survey of Hospitals. The report includes trend data on payments, costs, and charges. Data from 1991 are used to analyze the distribution of gains and losses for the different revenue sources, the relationship between these losses and hospital margins, and state-by-state differences. The report also compares the characteristics of hospitals that are and are not able to recover significant losses from uncompensated care, Medicaid, and Medicare through cost shifting. (10/95)

I-95-02: Hospital-Physician Relations: A National Survey of Hospital Chief Executive Officers and Chiefs of Medical Staffs

In an effort to identify factors that affect the financial performance of hospitals, ProPAC has undertaken a study of the financial effects of different organizational structures and mechanisms hospitals use to influence physician behavior. In the first phase of the project, ProPAC sponsored a national survey of hospital chief executive officers (CEOs) and chiefs of medical staff (CMSs) to evaluate the various aspects of hospital-physician relations. The survey explored the organization of hospital services; physician recruitment, retention, and evaluation; physician roles and responsibilities within hospitals; and hospital-physician financial arrangements. It also sought to ascertain how CEOs and CMSs perceived the respective roles they play and the influence of hospital management and physician staff within the hospital environment. The report describes survey methods and results, including differences in approaches to hospital-physician relations employed by different types of hospitals. The next phase, a multivariate analysis, will link hospital financial data with data from the national survey. (11/95)

I-95-03: Medicare Transfer Payment Policy

This report presents the results of an analysis of Medicare's payment for transfer cases. Currently, the transferring hospital is paid a uniform per diem payment up to the full DRG amount. The receiving hospital is paid the full DRG payment if it is the final discharging hospital. The analysis examines the relationship between payments and costs for these cases. In addition, it examines the characteristics of hospitals and cases involved in a transfer sequence. The study also includes information on trends in transfer rates since 1984. (6/95)

I-95-04: A Review of ProPAC's Allowances for Scientific and Technological Advances

This report describes the study ProPAC conducted to support the Commission's decisions regarding the allowances for scientific and technological advances (S&TA) for the PPS operating and capital payment update recommendations for fiscal year 1996. The Commission used a qualitative approach to assess S&TA costs, evaluating more generally whether any changes in technology costs have altered the trend established in previous years. This report reviews previous allowances, the technologies assessed, advances that may affect Medicare costs, and, finally, the Commission's decisions for the two PPS S&TA allowances for fiscal year 1996. It also discusses how ProPAC's technology-specific methodology differs from other approaches to technology costing, and evaluates how well the

methodology captures the information intended by the S&TA allowance. (4/95)

I-95-05: Hospital Costs and Payments by Revenue Source: The Impact of Medicaid Payment Increases in 1992

This report supplements ProPAC's recent report on hospital losses and gains by source of revenue (TRS I-95-01). Like the first report, this one analyzes the trend in payments relative to costs by payer, as well as differences by type of hospital and by state. The focus throughout this report, however, is the impact of substantial increases in revenue received by many hospitals in 1992 from Medicaid disproportionate share payments. This includes the impact on overall Medicaid payments and on the pattern of cost shifting to the private sector. (10/95)

Joint Report to the Congress on Medicare Managed Care

The Prospective Payment Assessment Commission and the Physician Payment Review Commission prepared this joint report on the role of managed care within the Medicare program. It describes program policies and analyzes options concerning beneficiary enrollment, plan participation, payment policy, access and quality, and data constraints. (10/95)

Pending

Medicare Per Capita Expenditures and Costs

This report will present a descriptive analysis of the variation in 1991 per capita expenditures for elderly beneficiaries by state and between the rural and urban areas of each state. Four per capita measures are being developed: (1) Medicare spending, (2) Medicare payments standardized to the national level (which will isolate geographic differences in utilization), (3) the provider production costs associated with Medicare spending, and (4) production costs adjusted for geographic price differences. All four of these measures will be broken down by setting, with physician services attributed to the setting in which they were provided. Geographic comparison will also be enhanced in the second and fourth measures by controlling for age and sex differences and by adding an estimated value for care provided to the elderly in military and Department of Veterans Affairs hospitals. (Forthcoming)

CONGRESSIONALLY MANDATED REPORTS

C-88-01: An Evaluation of the Department of HHS Report to Congress on Studies of Urban-Rural and Related Geographical Adjustments in the Medicare PPS

The Omnibus Budget Reconciliation Act of 1987 required ProPAC to report to the Congress on its evaluation of the Secretary's study on the feasibility and impact of eliminating or phasing out separate urban and rural payment rates. The report is organized into four major sections: background and definition of issues, summary of the Secretary's study methods and findings, ProPAC's evaluation of the Secretary's study, and future direction of Commission activities. (6/88)

C-88-02: Linking Medicare Capital Payments to Hospital Occupancy Rates

The Omnibus Budget Reconciliation Act of 1987 required ProPAC to report to the Congress on the suitability and feasibility of linking Medicare capital payments to hospital occupancy rates. This was addressed by reviewing current Medicare capital payment principles, examining historical trends in capital costs and occupancy rates, and analyzing the relationship between capital costs and occupancy. (4/88)

C-88-03: Outlier Payment Alternatives for Burn Cases

The Omnibus Budget Reconciliation Act of 1987 required ProPAC to study alternative payment methods for burn outlier cases under the prospective payment system. In this report, the Commission examines costs and PPS payments for all burn cases, as well as those for outlier cases only. Differences between payments and costs for burn hospitals and units and other PPS hospitals are examined. (7/88)

C-88-04: The Views of the Prospective Payment Assessment Commission on Developing Medicare Payment for Hospital Outpatient Surgery

The Omnibus Budget Reconciliation Act of 1987 required the Secretary of Health and Human Services to solicit ProPAC's views in developing outpatient payment systems and to include these views

100

in a series of reports to Congress. This report focuses on the facility component of payment for surgeries performed in hospital outpatient settings. (8/88)

C-88-05: Separate PPS Payment Rates for Hospitals in Large Urban Areas and Other Urban Areas

The Omnibus Budget Reconciliation Act of 1987 required ProPAC to "evaluate the desirability of maintaining separate DRG prospective payment rates for hospitals located in large urban areas...and in other urban areas." The report first describes how PPS currently treats hospitals in different sized urban areas. Descriptive information comparing hospitals in these areas is then presented. This is followed by a discussion of the PPS policy implication of variation in costs and margins by metropolitan statistical area size. (12/88)

C-89-01: Medicare Payment for Hospital Outpatient Surgery: The Views of the Prospective Payment Assessment Commission

The Omnibus Budget Reconciliation Act of 1987 required the Secretary of Health and Human Services to solicit the Commission's views on prospective payment for hospital outpatient surgery. This report contains ProPAC's recommendations and related rationale on such payment policy beginning in fiscal year 1990. It also presents background information used by the Commission in its deliberations, including the findings of ProPAC's analysis of hospital outpatient surgery costs. (4/89)

C-89-02: Payment Rates for Hospitals Redesignated from Rural to Urban: Analysis and Recommendations

The Technical and Miscellaneous Revenue Act of 1988 required ProPAC to study and report to Congress on the appropriate PPS payment for hospitals redesignated as urban in the Omnibus Budget Reconciliation Act of 1987. This study evaluates the payment policy and the treatment of wage and wage-related costs in computing area hospital wage indexes. The financial impact of various policy options on both the redesignated hospitals and on other hospitals located in the affected urban and rural areas is also assessed. (8/89)

C-89-03: Adjustment to the Non-Labor-Related Portion of the Standardized Amounts

The Omnibus Budget Reconciliation Act of 1987 required ProPAC to analyze the feasibility and appropriateness of a geographic adjustment to the non-labor-related portion of the PPS standardized amounts. Price data for non-labor components of the hospital market basket are compiled from available data sources to determine whether non-labor prices vary by geographic area. The report contains this information and the Commission's determination of whether such an adjustment is feasible and appropriate. (8/89)

C-89-04: Adequacy of PPS Payment for Medicare Beneficiaries with Hemophilia

The House Ways and Means Committee asked ProPAC to assess the adequacy of PPS payment for Medicare inpatients with hemophilia. This report studies the population size, trends in the price of the clotting factor, and the financial impact on hospitals for treating these patients. (10/89)

C-90-01: Medicare Payments to Rural Sole Community Hospitals and Small Rural Hospitals

The Omnibus Budget Reconciliation Act of 1989 required the Commission to submit a report to Congress on the feasibility and desirability of using a cost-based reimbursement system for paying small rural hospitals and sole community hospitals. Further, ProPAC was to assess the impact of using alternative market share definitions to determine eligibility for sole community hospital classification, and of accounting for decreases in admissions in determining payments to small rural hospitals or their costs. This report summarizes the Commission's findings. (5/90)

C-90-02: Hospital Outpatient Services Background Report

The Omnibus Budget Reconciliation Act of 1989 required the Commission to submit a report to Congress on several issues related to outpatient payments. This report examines the growth in hospital outpatient services and the revenues generated by outpatient visits. The costs of providing services in hospital outpatient departments are compared to those associated with freestanding centers. Last, outpatient quality assurance and peer review are discussed. (7/90)

Medicare-Dependent Hospitals

The Omnibus Budget Reconciliation Act of 1989 required the Commission to study the appropriateness of making an adjustment to Medicare payments to hospitals that treat a high proportion of Medicare discharges. Information on this topic was included in ProPAC's June 1990 report, *Medicare Prospective Payment and the American Health Care System.* (6/90)

Financial Status of High Case Mix Hospitals

The Omnibus Budget Reconciliation Act of 1989 required the Commission to study the financial status of high case mix hospitals with special attention devoted to capital investment. Information on this topic was included in ProPAC's June 1990 report, *Medicare Prospective Payment and the American Health Care System.* (6/90)

Area Wage Index

The Omnibus Budget Reconciliation Act of 1990 required ProPAC to examine available data from states and other sources measuring earnings and paid hours of employment of hospital workers by occupational category. The impact of variation in occupational mix on the computation of the area wage index is included. Information on this topic was included in ProPAC's March 1991 *Report and Recommendations to the Congress.* (3/91)

Nurse Practitioners and Other Non-Physician Providers

The Senate Committee on Appropriations asked that ProPAC study the use of nurse practitioners and other non-physician providers in settings other than acute care facilities and long-term care institutions. Information on this topic was included in ProPAC's June 1991 report, *Medicare and the American Health Care System.* (6/91)

C-91-01: Medicare's Capital Payment Policy

This report summarizes the Commission's analyses of hospital capital costs and views on Medicare's capital payment policy. ProPAC's objectives for evaluating capital payment, along with supporting data and opinions, are presented. The Commission also comments on the Secretary of Health and Human Services' prospective payment proposal. (5/91)

C-91-02: Medicaid Hospital Payment

The Omnibus Budget Reconciliation Act of 1990 required the Commission to conduct a study of Medicaid hospital payment rates. The study examines the relationship between Medicaid and Medicare payments, and the financial condition of the hospitals receiving Medicaid payments. Special attention is given to hospitals in urban areas that treat large numbers of people eligible for Medicaid and other low-income persons. (10/91)

C-91-03: Rural Hospitals Under Medicare's Prospective Payment System

The Senate Committee on Appropriations requested a report examining the changes made in rural hospital payment policies and their fiscal impacts. The report includes an analysis of the impact of 1991 payment rules on 1984 and 1989 hospital margins and assesses the relative importance of individual policy changes. In addition, ProPAC was asked to study the effect of low volume on overhead costs and payments. The report includes a discussion of the relationship between volume and financial performance, and case mix and performance. The adequacy of national DRG weights for rural hospitals and differences between sole community and other small rural hospitals' characteristics and financial condition are also discussed. Finally, the report includes a profile of services offered by rural hospitals. (10/91)

C-91-04: Passthrough Payments for Hemophilia Inpatients

The Omnibus Budget Reconciliation Act of 1989 required the Commission to submit a report to Congress that contains recommendations on paying for the cost of administering blood clotting factors to inpatients with hemophilia. This report summarizes the Commission's findings. (6/91)

C-92-01: Prospective Payment System for Medicare's Skilled Nursing Facility Payment Reform

The Omnibus Budget Reconciliation Act of 1990 required the Secretary of Health and Human Services to develop a proposal to modify the current system under which skilled nursing facilities receive payment for extended care services under Medicare Part A or a proposal to replace this system with a prospective payment system. The

Commission is required to submit an analysis of and comments on the proposal. This background report describes the Medicare SNF benefit, payment method, and beneficiary utilization. A cost function analysis provides information on variations in costs across facilities. Federal and state regulations affecting facility costs and use of the benefit also are discussed. This report concludes with recommendations concerning the need for a nursing facility wage index and case-mix adjustment in Medicare's payment policy. When the Secretary's report is released, the Commission will submit comments to the Senate Committee on Finance and the House Committee on Ways and Means. (3/92)

C-92-02: Medicare Payment for Hospital Outpatient Services: The Views of the Prospective Payment Assessment Commission

The Omnibus Budget Reconciliation Act of 1990 required the Secretary of Health and Human Services to develop a model system for Medicare payment for hospital outpatient services. The Commission is required to submit an analysis of and comments on the proposal. This background report describes Medicare's outpatient payment policies, which may vary by site of care and type of service. Ambulatory surgery and radiology are used to discuss problems with the current payment policy. The report concludes with nine recommendations for outpatient payment policy reform. When the Secretary's report is released, the Commission will submit its comments. (3/92)

C-92-03: Optional Hospital Payment Rates for Private Payers Based on Medicare's Methods (As specified in H.R. 3626)

This report addresses the development and impact of a system of Medicare-based rates for optional use by private insurers to control the growth in their payments to hospitals. The first part of the report discusses the design decisions that would need to be made, the steps necessary for orderly implementation of the system, and the administrative processes for ongoing operation of the system. The second part presents data on cost shifting in the hospital industry, and then uses these and other data to estimate the savings that would result from using optional rates under several different sets of assumptions. It also includes a discussion of the effects of optional rates on hospitals, private and government insurers, other providers, and patients. (3/92)

C-92-04: End-Stage Renal Disease Payment Policy

The Omnibus Budget Reconciliation Act of 1990 required the Commission to conduct a study to determine the costs, services, and profits associated with various modalities of dialysis treatments provided to end-stage renal disease patients. This study is the basis for recommendations regarding the method and level of payments for the facility component of dialysis services beginning in fiscal year 1993. The methodology to be used to update payment for subsequent fiscal years is included. As part of its annual March report, starting with fiscal year 1993, ProPAC is required to report its recommendations to Congress on an appropriate payment update factor. (6/92)

C-92-05: Interim Report on Payment Reform for PPS-Excluded Facilities

The Omnibus Budget Reconciliation Act of 1990 required the Secretary of Health and Human Services to develop a proposal to modify the current system under which PPS-excluded hospitals receive payment for the operation and capital-related costs of inpatient hospital services under Part A of the Medicare program. Alternatively, the Secretary could propose a system with payments made on the basis of nationally determined average standardized amounts. Although the Secretary has not submitted her proposal, the Commission prepared this background report. When the Secretary's report is released, the Commission will analyze it and submit comments to the Senate Committee on Finance and the House Committees on Ways and Means, and Energy and Commerce. (10/92)

C-93-01: Global Budgeting: Design and Implementation Issues

In response to a request from the House Committee on Ways and Means, Subcommittee on Health, the Commission examined the implementation of a global budgeting system. ProPAC focused on the system's application to hospitals and other institutional health care services. The report addresses issues involved in the allocation of a national budget among types of health care services, the availability of data to support the system, and the

mechanisms for ensuring that budget targets are met. (7/93)

C-94-01: Analysis of Medicaid Disproportionate Share Payment Adjustments

The Medicaid Voluntary Contribution and Provider-Specific Tax Amendments of 1991 (P.L. 102-234) required ProPAC to conduct a study of Medicaid disproportionate share payment adjustments. This study examines the feasibility and desirability of establishing maximum and minimum payment adjustments for hospitals deemed disproportionate share hospitals. It also assesses criteria (other than existing ones) that are appropriate for designating disproportionate share hospitals under Section 1923 of the Social Security Act. The report was submitted to the Senate Committee on Finance and the House Committee on Energy and Commerce. (1/94)

C-94-02: Interim Analysis of Payment Reform for Home Health Services

The Omnibus Budget Reconciliation Act of 1990 required the Secretary of Health and Human Services to develop a proposal to modify the current system under which Medicare pays for home health services or a proposal to replace such system with a prospective payment system. The Commission is required to submit an analysis of and comments on the proposal to the Senate Committee on Finance and the House Committee on Ways and Means. This background report describes Medicare's home health benefit, payment method, use, and agency costs and payments. Federal and state regulations affecting access and quality of care also are discussed. When the Secretary's report is released, the Commission will submit comments to the Senate Committee on Finance and the House Committee on Ways and Means. (3/94)

C-95-01: Analysis of the Secretary's Proposal for Medicare Payment for Hospital Outpatient Services

The Omnibus Budget Reconciliation Act of 1990 required the Secretary of Health and Human Services to develop, and the Commission comment on, a model system for Medicare payment for hospital outpatient services. This report describes Medicare's payment policies for outpatient services, documents the increase in outpatient expenditures, and identifies problems related to the current payment system. The Secretary's proposed reforms are discussed, and three recommendations for the Congress and the Secretary are included. (7/95)

Pending

Analysis of the Secretary's Proposal for Skilled Nursing Facility Payment Reform

The Omnibus Budget Reconciliation Act of 1990 required the Secretary of Health and Human Services to develop a proposal to modify the current system under which skilled nursing facilities receive payment for extended care services under Medicare Part A or a proposal to replace this system with a prospective payment system. The Commission is required to submit an analysis of and comments on the proposal to the Senate Committee on Finance and the House Committees on Ways and Means, and Energy and Commerce. (This report will be issued after the Secretary's proposal becomes available.)

Analysis of the Secretary's Proposal for Payment Reform for PPS-Excluded Facilities

The Omnibus Budget Reconciliation Act of 1990 required the Secretary of Health and Human Services to develop a proposal to modify the current system under which PPS-excluded hospitals receive payment for the operation and capital-related costs of inpatient hospital services under Part A of the Medicare program. Alternatively, the Secretary could propose a system with payments made on the basis of nationally determined average standardized amounts. The Commission is required to submit an analysis of and comments on the Secretary's proposal to the Senate Committee on Finance and the House Committees on Ways and Means, and Energy and Commerce. (This report will be issued after the Secretary's proposal becomes available.)

Analysis of the Secretary's Proposal for Home Health Service Payment Reform

The Omnibus Budget Reconciliation Act of 1990 required the Secretary of Health and Human Services to develop a proposal to modify the current system under which Medicare pays for home health services or a proposal to replace such system with a prospective payment system. The Commission is

104

required to submit an analysis of and comments on the proposal to the Senate Committee on Finance and the House Committee on Ways and Means. (This report will be issued after the Secretary's proposal becomes available.)

Analysis of the Secretary's Legislative Proposal Eliminating Separate Average Standardized Amounts

The Omnibus Budget Reconciliation Act of 1989 required the Secretary of Health and Human Services to prepare a legislative proposal eliminating separate average standardized amounts for hospitals located in large urban, other urban, and rural areas. It also directed ProPAC to submit a report to Congress analyzing this proposal and its impact on hospitals. (This report will be issued after the Secretary's proposal becomes available. It should be noted that in OBRA 1990, Congress mandated the elimination of the separate rural standardized payment amount by fiscal year 1995.)

Appendix B. Biographical Sketches of Commissioners

Stuart H. Altman, Chairman

Stuart H. Altman is the Sol C. Chaikin Professor of National Health Policy at the Florence Heller Graduate School of Social Policy at Brandeis University. An economist whose research interests are primarily in the area of Federal health policy, he has been at Brandeis since 1977. Between 1971 and 1976, Dr. Altman was deputy assistant secretary for planning and evaluation/health at the Department of Health, Education, and Welfare (now the Department of Health and Human Services). From 1973 to 1974, he also served as the deputy director for health of the President's Cost of Living Council, where he was responsible for developing the council's program on health care cost containment. Dr. Altman is a member of the Institute of Medicine of the National Academy of Sciences and a former member of its governing council, and serves on the board of Beth Israel Hospital (Boston). He is a past president of the Association for Health Services Research and a former board member of the Robert Wood Johnson Clinical Scholars Program. He has testified before the Congress on a wide range of health policy issues and has written an array of articles in the field. Dr. Altman received a B.B.A. from the City College of New York, and both an M.A. and a Ph.D. in economics from the University of California, Los Angeles.

Susan S. Bailis

Susan S. Bailis is president and chief operating officer of The A•D•S Group, which specializes in long-term care and senior living. From 1983 to 1985, Ms. Bailis was associate director of New England Medical Center, where she managed the hospital's entry into the long-term care field. Earlier, she was director of social services at the medical center. Ms. Bailis has held a number of academic appointments, most recently as assistant professor of psychiatry at Tufts University School of Medicine. She serves on the boards of several hospitals and has held leadership positions in many local and national professional and community organizations. These include the executive committee of the American Health Care Association, president of the Massachusetts Federation of Nursing Homes, the board of the Alzheimer's Disease and Related Disorders Association, the board of Simmons College, the board of overseers of the Florence Heller School at Brandeis University, secretary of the National Association of Social Workers, and president-elect of the Society for Hospital Social Work Directors of the American Hospital Association. She is a member of the Business Leadership Forum and Women's Leadership Forum of the Democratic National Committee. She also served as a member of the Massachusetts Medicaid State Advisory Board. Ms. Bailis has published and lectured widely on health care and social welfare policy. She received a B.A. from Brandeis University and an M.S.W. from Simmons College School of Social Work.

James D. Bernstein

James D. Bernstein is director of the North Carolina Office of Rural Health and Resources Development, which has established 65 community-based health centers and recruited more than 1,100 providers to the state since 1973. Previously, Mr. Bernstein administered a 40-bed hospital and eight health centers for the Indian Health Service. He has held a variety of professional positions, including chairman of the Rural Health Care Advisory Panel of the Office of Technology Assessment. He currently is national program director for the Robert Wood Johnson Foundation initiative, Practice Sites: State Primary Care Development Strategies. Mr. Bernstein received a B.A. from the Johns Hopkins University and an M.H.A. from the University of Michigan.

Clay D. Edmands

Clay D. Edmands is president of Salina Regional Health Center in Salina, Kansas, an acute care rural referral center. His prior experience includes several years with the Fairview Hospital System in Minneapolis, Minnesota, where he held various positions, among them administrator for development and operations of regional health management and supportive services. Mr. Edmands was on the board of the Kansas Hospital Association from 1980 to

1992, serving as chairman, treasurer, and member of the executive committee. In addition to two terms on a regional policy advisory board of the American Hospital Association, Mr. Edmands has been board president of the Health Systems Agency of Western Kansas. Other community involvements include the Salina health education board and Voluntary Hospitals of America. Currently a preceptor for the University of Kansas program in health care administration and chair of the university's health care services advisory board, Mr. Edmands formerly was a faculty preceptor for the University of Minnesota independent study program in hospital administration. He holds a B.S. in business administration from the University of Kansas and an M.H.A. from the University of Minnesota.

Spencer Johnson

Spencer Johnson has been president of the Michigan Health and Hospitals Association since 1985. Previously, he was executive vice president of the Hospital Association of New York State. Mr. Johnson's prior experience includes staff positions on the U.S. Senate Committee on Human Resources and in the U.S. House of Representatives. He was associate director of the Domestic Council for Health, Social Security, and Income Assistance from 1976 to 1977, where he was responsible for policy planning and development for President Gerald Ford. Mr. Johnson has been a member of the American Hospital Association's State Issues Forum and Council on Allied and Government Relations. He has served on various boards, including those of the Albany Medical College, Washington Hospital Center, the Alpha Center for Health Planning, and the Genesee Regional Health Planning Council. Mr. Johnson received a B.A. in journalism from St. Bonaventure University and an M.P.A. in health policy and planning from Cornell University.

Clark E. Kerr

Clark E. Kerr is president of ConsumerFirst, a nonprofit public benefit corporation, and is chief executive officer of ConsumerFirst Television. He chairs the California Health Policy and Data Advisory Commission and the State of California Health Information Committee. He also chairs the Consumer Experience Studies Committee of the Health Benefits Advisory Council for the California Public Employees Retirement System. In addition, Mr. Kerr is executive producer and cohost of Health Upbeat, a television series providing information on health care quality, access, and costs to the public. Before joining ConsumerFirst, he held various positions at Bank of America, including vice president of government relations, manager of corporate health programs, and manager of benefits planning. He is the immediate past president of the California Business Group on Health. Mr. Kerr received a B.A. from the University of California, Davis, and an M.B.A. from the University of California, Berkeley.

James R. Kimmey

James R. Kimmey is vice president for health sciences and professor of public health at the St. Louis University Health Sciences Center, as well as professor of community and family medicine at the St. Louis University School of Medicine. In addition, Dr. Kimmey serves as chair and chief executive officer of SLUCare, the clinical services division of the university. He has taught at the University of Wisconsin, the Johns Hopkins University, New York University, and Columbia University. He was administrator of the Division of Health Policy and Planning of the state of Wisconsin and executive director of the American Public Health Association in New York and Washington State. Dr. Kimmey served as president of the American Health Planning Association (1980–81) and as a member of its board of directors. Former editor of *Health Planning Memorandum* and managing editor of the *American Journal of Public Health*, he has written extensively on health planning and other health policy topics. Dr. Kimmey received B.S., M.S., and M.D. degrees from the University of Wisconsin and an M.P.H. from the University of California, Berkeley.

Judith R. Lave

Judith R. Lave is professor of health economics and codirector of the Center for Research on Health Care at the University of Pittsburgh. Her primary academic appointment is in the Graduate School of Public Health, but she holds secondary appointments in the Department of Psychiatry, Department of Economics, and the Katz Graduate School of Business. She is a member of the research study section of the Agency for Health Care Policy and

Research and of the Institute of Medicine's report review committee. Formerly, Dr. Lave was a faculty member at Carnegie-Mellon University. At the Department of Health and Human Services, she was director of the Division of Economic and Quantitative Analysis in the Office of the Deputy Assistant Secretary and director of the Office of Research in the Health Care Financing Administration. A charter member of the Federal government's Senior Executive Service, Dr. Lave is also a member of the Institute of Medicine of the National Academy of Sciences and the National Academy of Social Insurance. She is a past president of the Association for Health Services Research and the Foundation for Health Services Research. In addition, Dr. Lave chaired the technical panel on health and was a member of the expert panel on income and health care for the Advisory Council on Social Security. She serves on the editorial boards of both the *Journal of Health Politics, Policy and Law* and the Health Administration Press. Dr. Lave has served as a consultant to private and public agencies in the United States and Canada. She received a B.A. from Queens University in Canada, from which she also holds an honorary LL.D., and a Ph.D. in economics from Harvard University.

Hugh W. Long

Hugh W. Long is associate professor of health systems management at the Tulane University School of Public Health and Tropical Medicine. He also holds appointments with Tulane's Freeman School of Business, School of Law, and Graduate Faculty. Dr. Long has taught at Yale University, Stanford University, San Jose State University, and Ohio State University. He is a member of the Medicare Geographic Classification Review Board. Dr. Long has served as a witness and ad hoc adviser on health care financing to the U.S. House of Representatives' Committee on Ways and Means and to the U.S. Senate Committee on Finance. He has written numerous articles on health care financing and management and serves on the editorial board of *Decisions in Imaging Economics*. Dr. Long is the faculty director of Tulane's Master of Medical Management degree program for physicians. He is a member of the Louisiana bar. Dr. Long received a B.A. from Ohio State University, an M.B.A. and a Ph.D. in business administration and finance from Stanford University, and a J.D. from the Tulane University School of Law.

Robert J. Myers

Robert J. Myers was chief actuary of the Social Security Administration from 1947 to 1970 and deputy commissioner of Social Security from 1981 to 1982. Currently, he is a member of the Committee of Actuaries of the United Nations Joint Staff Pension Fund, as well as president of the International Fisheries Commissions Pension Society. A trustee for several organizations, including the investment program (mutual funds) of the American Association of Retired Persons, Dr. Myers also serves on the board of advisers of Studies on Smoking. An active participant in retirement and pension plan issues, Dr. Myers chaired the Commission on Railroad Retirement Reform (1988–90) and the Railroad Unemployment Compensation Committee (1983–85). He served on the Commission on the Social Security "Notch" Issue (1993–94) and was executive director of the National Commission on Social Security Reform (1982–83). In addition, Dr. Myers has served as an actuarial consultant to various congressional committees, as a technical adviser on Social Security and pension programs to numerous foreign countries, and as president of both the American Academy of Actuaries and the Society of Actuaries. He has published widely on topics related to Social Security and retirement, and is professor emeritus at Temple University. He received a B.S. degree from Lehigh University, an M.S. degree from the University of Iowa, and honorary degrees from Lehigh University and Muhlenberg College.

Donald R. Oder

Donald R. Oder is executive vice president and chief operating officer of Rush-Presbyterian-St. Luke's Medical Center in Chicago, where he formerly was senior vice president. Before that, he was audit manager with Arthur Andersen & Co. in Chicago. Mr. Oder has held various academic appointments and currently is a professor in the Department of Health Systems Management at the Rush University College of Health Sciences. He is a member of and has held leadership positions in several professional associations, including the American College of Healthcare Executives, the American Hospital Association, the Illinois Hospital Association, Voluntary Hospitals of America, the American Institute of Certified Public Accountants, and the Illinois C.P.A. Society. He has served

108

on the board of directors of the Better Business Bureau of Metropolitan Chicago, Inc., and on the occupational health committee of the Chicago Association of Commerce and Industry. Mr. Oder received a B.S. from Wichita State University, a C.P.A. certificate from the University of Illinois, and an M.B.A. from the University of Chicago.

Glenda Rosenbloom

Glenda Rosenbloom has been vice president of prospective payment for American Medical International since 1983. Previously, she was health care consulting manager at Ernst & Whinney, where she was responsible for training hospital personnel implementing the Medicare prospective payment system. From 1972 to 1982, Ms. Rosenbloom was senior director for Medicare provider payment at the Blue Cross Blue Shield Association. Before that, she was audit supervisor at Peat, Marwick, Mitchell. She cochaired the Medicare Technical Advisory Group, which includes senior officials from the Health Care Financing Administration, the hospital industry, peer review organizations, and fiscal intermediaries. Ms. Rosenbloom served on the board of the Federation of American Health Systems, chaired its legislative committee, and was vice chair of its health care financing committee. She received a B.S. from the University of Illinois and is a certified public accountant.

J. Michael Sadaj

J. Michael Sadaj is a physician in private practice and a member of Rocky Mountain Clinic in Butte, Montana, where he specializes in internal medicine and pulmonary diseases. He is vice president and treasurer of the Montana Physicians Organization's medical service organization. He has served as secretary-treasurer, vice president, and president of St. James Community Hospital medical staff, as well as chief of the Department of Medicine, and is currently chairman of the credentialing committee. From 1979 to 1990, Dr. Sadaj was medical director of respiratory therapy and the pulmonary laboratory at St. James. For several years, he has served on the Occupational Diseases Board of the state of Montana. A past president of the Montana Medical Association (1988–89), Dr. Sadaj was a member of the executive committee from 1985 to 1995. In addition, he has served as a delegate to the American Medical Association Resident Physician Section, Young Physician Section, and the House of Delegates, and from 1977 to 1979, was the resident member on the organization's Council on Constitution and Bylaws. Dr. Sadaj is a founding member of the board of directors of the Montana Professional Assistance Program and was a member of the Rural Physician Retention Trust Fund Advisory Board. In 1984, he was elected to the Butte-Silver Bow Government Study Commission. From 1974 to 1979, Dr. Sadaj was a resident in internal medicine and a fellow in pulmonary diseases at the University of Nebraska Medical Center. He received B.S. and M.D. degrees from the University of Nebraska.

Gerald M. Shea

Gerald M. Shea is assistant to the president for government affairs of the American Federation of Labor-Congress of Industrial Organizations. Previously, he has served as executive assistant to the president, executive assistant to the secretary-treasurer, and director of the employee benefits department of the A.F.L.-C.I.O., as well as head of the A.F.L.-C.I.O.'s health care reform campaign. His prior experience includes 12 years with the national office of the Service Employees International Union, where he held various positions, including assistant to the president for government affairs and health care division director. Before that, he was executive director and business manager of two local union offices. Mr. Shea is a member of the Advisory Council on Social Security. He received a B.A. from Boston College.

Roxane B. Spitzer

Roxane B. Spitzer is professor and associate dean for Practice Management at Vanderbilt University School of Nursing, professor of management at the Owen School of Vanderbilt, and executive director of University Community Health Systems. Previously, she was vice president of managed care at MEDICUS Systems. She also has been corporate vice president of St. Joseph Health System in Orange, California, and chief operating officer of the Good Samaritan Hospital in Los Angeles. She holds various professorships at Texas Tech University Health Sciences Center; University of Southern California; University of California, Los Angeles; and Vanderbilt University. From 1981 to 1988, Dr. Spitzer was vice president, patient care services, at

Cedars-Sinai Medical Center. Previously, she was director of nursing and practiced nursing in both inpatient and public health settings. She is a fellow of the American Academy of Nursing, a diplomate of the American College of Healthcare Executives, and serves on many other boards. Dr. Spitzer has written and spoken extensively on such issues as managing nonprofit organizations, cost containment, quality and productivity, nursing in the 1990s, and strategic management and leadership. She received a B.S. from Adelphi University, an M.A. in nursing service administration from Columbia University, and both an M.A. in management and an M.B.A. from Claremont Graduate School. Dr. Spitzer holds a Ph.D. in management from the Peter Drucker Management Center, Claremont Graduate School.

James R. Tallon Jr.

James R. Tallon Jr. is president of the United Hospital Fund of New York. He also chairs the Kaiser Commission on the Future of Medicaid and is a visiting lecturer at the Harvard University School of Public Health. In addition, he is a member of the board of commissioners of the Joint Commission on the Accreditation of Healthcare Organizations. Prior to joining the United Hospital Fund, he was the majority leader of the New York State Assembly, where he served for 19 years beginning in 1975. Mr. Tallon was a member of the executive committee of the National Academy for State Health Policy and served as liaison to the President's Task Force on Health Care Reform from the National Conference of State Legislatures. He also was a member of the Governor's Health Care Advisory Board's Task Force on the President's Health Care Plan in New York and chaired the committee on Medicaid of the Health Policy Agenda for the American People. Before his election to the Assembly, Mr. Tallon was the executive director of the NY-PENN Health Planning Council, one of New York's eight regional health planning agencies. Mr. Tallon received a B.A. from Syracuse University and completed graduate work at the Maxwell School of Citizenship and Public Affairs. He received an M.A. from Boston University.

Jae L. Wittlich

Jae L. Wittlich is president and chief operating officer, group operations, CNA Insurance Companies. He also served as vice president of the group benefits department from 1985 to 1990 and as vice president of the group operations division from 1977 to 1985. Before joining CNA Insurance, Mr. Wittlich was with Allstate for 12 years, most recently as assistant vice president of group life and health operations. He is currently vice chairman of the board of directors of the Health Insurance Association of America. Besides being a member of the executive committee and board of directors of the Association of Private Pension and Welfare Plans, he serves on the boards of directors of AmeriChoice Corporation; the Foundation for Health Enhancement; Managed Healthcare Systems of New York; and Private Healthcare Systems, Inc. In addition, Mr. Wittlich has served on many other industry association committees and lectured frequently on health care topics. He received the 1990 Health Insurance Association of America's Founders Medal. Mr. Wittlich is a fellow of the Society of Actuaries and a member of the American Academy of Actuaries. He holds B.A. and M.A. degrees from the University of Michigan.

Appendix C. Statutory Mandate of the Commission

The Congress established the Prospective Payment Assessment Commission (ProPAC) in Public Law 98-21 (the Social Security Amendments of 1983) on April 20, 1983. The current responsibilities of ProPAC are set forth in sections 1862(a) and 1886 of the Social Security Act. Further responsibilities are set forth in various Acts and conferences reports. Below are the passages of the relevant legislative sources, as amended through 1994.

Section 1886(d) of the Social Security Act

(4)(C)(i) The Secretary shall adjust the classifications and weighting factors established under subparagraphs (A) and (B) [DRG classifications], for discharges in fiscal year 1988 and at least annually thereafter, to reflect changes in treatment patterns, technology, and other factors which may change the relative use of hospital resources.

(ii) For discharges in fiscal year 1990, the Secretary shall reduce the weighting factor for each diagnosis-related group by 1.22 percent.

(iii) Any such adjustment under clause (i) for discharges in a fiscal year (beginning with fiscal year 1991) shall be made in a manner that assures that the aggregate payments under this subsection for discharges in the fiscal year are not greater or less than those that would have been made for discharges in the year without such adjustment.

(iv) The Secretary shall include recommendations with respect to adjustments to weighting factors under clause (i) in the annual report to Congress required under subsection (e)(3)(B).

Section 1886(e)(2) through (6) of the Social Security Act

(2)(A) The Director of the Congressional Office of Technology Assessment (hereinafter in this subsection referred to as the "Director" and the "Office," respectively) shall provide for appointment of a Prospective Payment Assessment Commission (hereinafter in this subsection referred to as the "Commission"), to be composed of independent experts appointed by the Director (without regard to the provisions of title 5, United States Code, governing appointments in the competitive service). The Commission shall review the applicable percentage increase factor described in subsection (b)(3)(B) and make recommendations to the [Congress] on the appropriate percentage change which should be effected for hospital inpatient discharges under subsections (b) and (d) for fiscal years beginning with fiscal year 1986. In making its recommendations, the Commission shall take into account changes in the hospital market-basket described in subsection (b)(3)(B), hospital productivity, technological and scientific advances, the quality of health care provided in hospitals (including the quality and skill level of professional nursing required to maintain quality care), and long-term cost-effectiveness in the provision of inpatient hospital services.

(B) In order to promote the efficient and effective delivery of high-quality health care services, the Commission shall, in addition to carrying out its functions under subparagraph (A), study and make recommendations for each fiscal year regarding changes in each existing reimbursement policy under this title under which payments to an institution are based upon prospectively determined rates and the development of new institutional reimbursement policies under this title, including recommendations related to payments during such fiscal year under the prospective payment system established under this section for determining payments for the operating costs of inpatient hospital services, including changes in the number of diagnosis-related groups used to classify inpatient hospitals discharges under subsection (d), adjustments to such groups to reflect severity of illness, and changes in the methods by which hospitals are reimbursed for capital-related costs, together with general recommendations on the effectiveness and quality of health care delivery systems in the United States and the effects on such systems of institutional reimbursements under this title.

112

(C) By not later than June 1 of each year, the Commission shall submit a report to Congress containing an examination of issues affecting health care delivery in the United States, including issues relating to—

(i) trends in health care costs;

(ii) the financial condition of hospitals and the effect of the level of payments made to hospitals under this title on such condition;

(iii) trends in the use of health care services; and

(iv) new methods used by employers, insurers, and others to constrain growth in health care costs.

(3)(A) The Commission, not later than March 1 before the beginning of each fiscal year (beginning with fiscal year 1986) shall report its recommendations to Congress on an appropriate change factor which should be used for inpatient hospital services in that fiscal year, together with its general recommendations under paragraph (2)(B) regarding the effectiveness and quality of health care delivery systems in the United States.

(B) The Secretary, not later than April 1, 1987, for fiscal year 1988 and not later than March 1, before the beginning of each fiscal year (beginning with fiscal year 1989), shall report to the Congress the Secretary's initial estimate of the percentage change that the Secretary will recommend under paragraph (4) with respect to that fiscal year.

(4)(A) Taking into consideration the recommendations of the Commission, the Secretary shall recommend for each fiscal year (beginning with fiscal year 1988) an appropriate change factor for inpatient hospital services for discharges in that fiscal year which will take into account amounts necessary for the efficient and effective delivery of medically appropriate and necessary care of high quality. The appropriate change factor may be different for all large urban subsection (d) hospitals, other urban subsection (d) hospitals, urban subsection (d) Puerto Rico hospitals, rural subsection (d) hospitals, and rural subsection (d) Puerto Rican hospitals, and all other hospitals and units not paid under subsection (d), and may vary among such other hospitals and units.

(B) In addition to the recommendation made under subparagraph (A), the Secretary shall, taking into consideration the recommendations of the Commission under paragraph (2)(B), recommend for each fiscal year (beginning with fiscal year 1992) other appropriate changes in each existing reimbursement policy under this title under which payments to an institution are based upon prospectively determined rates.

(5) The Secretary shall cause to have published in the *Federal Register*, not later than—

(A) the May 1 before each fiscal year (beginning with fiscal year 1986), the Secretary's proposed recommendations under paragraph (4) for that fiscal year for public comment, and

(B) the September 1 before such fiscal year after such consideration of public comment on the proposal as is feasible in the time available, the Secretary's final recommendations under such paragraph for that year.

The Secretary shall include in the publication referred to in subparagraph (A) for a fiscal year the report of the Commission's recommendations submitted under paragraph (3) for that fiscal year. To the extent that the Secretary's recommendations under paragraph (4) differ from the Commission's recommendations for that fiscal year, the Secretary shall include in the publication referred to in subparagraph (A) an explanation of the Secretary's grounds for not following the Commission's recommendations.

(6)(A) The Commission shall consist of 17 individuals. Members of the Commission shall first be appointed no later than April 1, 1984, for a term of three years, except that the Director may provide initially for such shorter terms as will insure that (on a continuing basis) the terms of no more than seven members may expire in any one year.

(B) The membership of the Commission shall include individuals with national recognition for their expertise in health economics, health facility management, reimbursement of health facilities or other providers of services which reflect the scope of the Commission's responsibilities, and other related fields, who provide a mix of different professional, broad geographic representation, and a balance between urban and rural representatives, including physicians and registered professional

nurses, employers, third party payors, individuals skilled in the conduct and interpretation of biomedical, health services, and health economics research, and individuals having expertise in the research and development of technological and scientific advances in health care.

(C) Subject to such review as the Office deems necessary to assure the efficient administration of the Commission, the Commission may—

(i) employ and fix the compensation of an Executive Director (subject to the approval of the Director of the Office) and such other personnel (not to exceed 25) as may be necessary to carry out its duties (without regard to the provisions of the title 5, United States Code, governing appointments in the competitive service);

(ii) seek such assistance and support as may be required in the performance of its duties from appropriate Federal departments and agencies;

(iii) enter into contracts or make other arrangements, as may be necessary for the conduct of the work of the Commission (without regard to section 3709 of the Revised Statutes (41 U.S.C. 5));

(iv) make advance, progress, and other payments which relate to the work of the Commission;

(v) provide transportation and subsistence for persons serving without compensation; and

(vi) prescribe such rules and regulations as it deems necessary with respect to the internal organization and operation of the Commission.

Section 10(a)(1) of the Federal Advisory Committee Act shall not apply to any portion of a Commission meeting if the Commission, by majority vote, determines that such portion of such meeting should be closed.

(D) While serving on the business of the Commission (including travel-time), a member of the Commission shall be entitled to compensation at the per diem equivalent of the rate provided for level IV of the Executive Schedule under section 5315 of title 5, United States Code; and while so serving away from home and his regular place of business, a member may be allowed travel expenses, as authorized by the Chairman of the Commission. Physicians serving as personnel of the Commission may be provided a physician comparability allowance by the Commission in the same manner as Government physicians may be provided such an allowance by an agency under section 5948 of title 5, United States Code, and for such purpose subsection (i) of such section shall apply to the Commission in the same manner as it applies to the Tennessee Valley Authority. For purposes of pay (other than pay of members of the Commission) and employment benefits, rights, and privileges, all personnel of the Commission shall be treated as if they were employees of the United States Senate.

(E) In order to identify medically appropriate patterns of health resources use in accordance with paragraph (2), the Commission shall collect and assess information on medical and surgical procedures and services, including information on regional variations of medical practice and lengths of hospitalization and on other patient-care data, giving special attention to treatment patterns for conditions which appear to involve excessively costly or inappropriate services not adding to the quality of care provided. In order to assess the safety, efficacy, and cost-effectiveness of new and existing medical and surgical procedures, the Commission shall, in coordination to the extent possible with the Secretary, collect and assess factual information, giving special attention to the needs of updating existing diagnosis-related groups, establishing new diagnosis-related groups, and making recommendations on relative weighting factors for such groups to reflect appropriate differences in resource consumption in delivering safe, efficacious, and cost-effective care. In collecting and assessing information, the Commission shall—

(i) utilize existing information, both published and unpublished, where possible, collected and assessed either by its own staff or under other arrangements made in accordance with this paragraph;

(ii) carry out, award grants or contracts for, original research and experimentation, including clinical research, where existing information is inadequate for the development of useful and valid guidelines by the Commission; and

(iii) adopt procedures allowing any interested party to submit information with respect to medical

and surgical procedures and services (including new practices, such as the use of new technologies and treatment modalities), which information the Commission shall consider in making reports and recommendations to the Secretary and Congress.

(F) The Commission shall have access to such relevant information and data as may be available from appropriate Federal agencies and shall assure that its activities, especially the conduct of original research and medical studies, are coordinated with the activities of Federal agencies.

(G)(i) The Office shall have unrestricted access to all deliberations, records, and data of the Commission, immediately upon its request.

(ii) In order to carry out its duties under this paragraph, the Office is authorized to expend reasonable and necessary funds as mutually agreed upon by the Office and the Commission. The Office shall be reimbursed for such funds by the Commission from the appropriations made with respect to the Commission.

(H) The Commission shall be subject to periodic audit by the General Accounting Office.

(I)(i) There are authorized to be appropriated such sums as may be necessary to carry out the provision of this paragraph.

(ii) Eighty-five percent of such appropriation shall be payable from the Federal Hospital Insurance Trust Fund, and 15 percent of such appropriation shall be payable from the Federal Supplementary Medical Insurance Trust Fund.

(J) The Commission shall submit requests for appropriations in the same manner as the Office submits requests for appropriations, but amounts appropriated for the Commission shall be separate from amounts appropriated for the Office.

Section 1862(a) of the Social Security Act

(a) Notwithstanding any other provision of this title, no payment may be made under part A or part B for any expenses incurred for items or services—

(1)(A) which, except for items and services described in a succeeding subparagraph, are not reasonable and necessary for the diagnosis or treatment of illness or injury or to improve the functioning of a malformed body member,

(B) in the case of items and services described in section 1861(s)(10), which are not reasonable and necessary for the prevention of illness,

(C) in the case of hospice care, which are not reasonable and necessary for the palliation or management of terminal illness,

(D) in the case of clinical care items and services provided with the concurrence of the Secretary and with respect to research and experimentation conducted by, or under contract with, the Prospective Payment Assessment Commission or the Secretary, which are not reasonable and necessary to carry out the purposes of section 1886(e)(6), . . .

Section 1135(d) of the Social Security Act

(6)(A) The Secretary shall develop a model system for the payment for outpatient hospitals services other than ambulatory surgery.

(B) The Secretary shall submit to Congress a report on the model payment system under subparagraph (A) by January 1, 1991.

(7) The Secretary shall solicit the views of the Prospective Payment Assessment Commission in developing the systems under paragraphs (1) and (6), and shall include in the Secretary's reports under this subsection any views the Commission may submit with respect to such systems.

Section 9114 of the Consolidated Omnibus Budget Reconciliation Act of 1985, Pub. L. 99-272

(a) Disclosure of Information.—The Secretary of Health and Human Services shall make available to the Prospective Payment Assessment Commission, the Congressional Budget Office, and the Congressional Research Service the most current information on the payments being made under section 1886 of the Social Security Act to individual hospitals. Such information shall be made available in a manner that permits examination of the impact of such section on such hospitals.

(b) Confidentiality.—Information disclosed under subsection (a) shall be treated as confidential

and shall not be subject to further disclosure in a manner that permits the identification of individual hospitals.

Section 6003(i) of the Omnibus Budget Reconciliation Act of 1989, Pub. L. 101-239: Legislative Proposal Eliminating Separate Average Standardized Amounts

(1) In General.—The Secretary of Health and Human Services (hereafter referred to as the "Secretary") shall design a legislative proposal eliminating the system of determining separate standardized amounts for subsection (d) hospitals (as defined in section 1886(d)(1)(B) of the Social Security Act) classified as being located in large urban, other urban, or rural areas under section 1886(d)(2)(D) of such Act, and shall include in such proposal the following—

(A) A transition period beginning in fiscal year 1992 during which a single rate for determining payment to hospitals in all areas shall be phased in with such single rate to be completely in effect by fiscal year 1995.

(B) Recommendations, where appropriate, for modifying or maintaining additional payments or adjustments under title XVIII of the Social Security Act for teaching hospitals, rural referral centers, sole community hospitals, disproportionate share hospitals, and outlier cases, and for creating additional payments or adjustments where deemed appropriate by the Secretary.

(C) Recommendations with respect to recalculating standardized amounts to reflect information from more recent cost reporting periods.

(D) Recommendations, where appropriate, for modifying reimbursement for hospitals that are not subsection (d) hospitals under title XVIII of such Act.

(E) A recommendation for a methodology to reflect the severity of illness of different patients within the same diagnosis related group (as determined in section 1886(d)(4)(B) of such Act).

(2) Report to Congress and ProPAC.—(A) Not later than October 1, 1990, the Secretary shall submit the proposal described in paragraph (1) and an accompanying analysis of the impact of the proposed elimination of separate average standardized amounts on various categories of hospitals to Congress and the Prospective Payment Assessment Commission.

(B) Not later than February 1, 1991, the Prospective Payment Assessment Commission and the Director of the Congressional Budget Office shall each prepare and submit to Congress a report analyzing the legislative proposal submitted under subparagraph (A), and shall include in such report an analysis of the probable impact of such legislation on hospitals participating in the Medicare program.

Section 6003(j) of the Omnibus Budget Reconciliation Act of 1989, Pub. L. 101-239: ProPac Study of Payments to Rural Sole Community Hospitals and Small Rural Hospitals

(1) Study.— The Prospective Payment Assessment Commission (hereinafter referred to as the "Commission") shall conduct a study of the feasibility and desirability of—

(A) using a cost-based reimbursement system to determine the amount of payments to be made under the Medicare program to small rural hospitals and rural sole community hospitals for the operating costs of inpatient hospital services;

(B) developing and applying alternative definitions of market share for use in determining the eligibility of hospitals for classification as sole community hospitals under section 1886(d)(5) of the Social Security Act; and

(C) developing and applying a method for accounting for decreases in the number of inpatients served in determining payment to small rural hospitals under section 1886(d) of the Social Security Act for the operating costs of inpatient hospital services.

(2) Report.—By not later than May 1, 1990, the Commission shall submit a report to Congress on the study conducted under paragraph (1).

116

Section 6011 of the Omnibus Budget Reconciliation Act of 1989, Pub. L. 101-239 Pass Through Payments for Hemophilia Inpatients

(a) Pass Through Payment for Hemophilia Inpatients.—The second sentence of section 1886(a)(4) of the Social Security Act . . . is amended to read as follows—

> For purposes of this section, the term "operating cost of inpatient hospital services" . . . does not include . . . costs with respect to administering blood clotting factors to individual with hemophilia.

(b) Determining Payment Amount.—The Secretary of Health and Human Services shall determine the amount of payment made to hospitals under part A of title XVIII of the Social Security Act for the costs of administering blood clotting factors to individuals with hemophilia by multiplying a predetermined price per unit of blood clotting factor (determined in consultation with the Prospective Payment Assessment Commission) by the number of units provided to the individual.

(c) Recommendations on Payments.—The Prospective Payment Assessment Commission and the Health Care Financing Administration shall develop recommendations with respect to payments under part A of title XVIII of the Social Security Act for the costs of administering blood clotting factors to individuals with hemophilia, and shall submit such recommendations to Congress not later than 18 months after the date of enactment of this Act.

Section 6137 of the Omnibus Budget Reconciliation Act of 1989, Pub. L. 101-239: ProPAC Study of Payments for Services in Hospital Outpatient Departments

(a) In General.—The Prospective Payment Assessment Commission shall conduct a study on payment under title XVIII of the Social Security Act for hospital outpatient services. Such study shall include an examination of—

(1) the sources of growth in spending for hospital outpatient services;

(2) the differences between the costs of delivering services in a hospital outpatient department as opposed to providing similar services in other appropriate settings (including ambulatory surgery centers and physician offices);

(3) the effects on outpatient hospital costs of the step-down method used to allocate hospital capital between inpatient and outpatient departments and the extent to which hospital outpatient costs were affected by the implementation of the prospective payment system of payment for inpatient hospital services and by increased review of such services by peer review organizations; and

(4) alternative methods for reimbursing hospitals for services in outpatient departments under the Medicare program, including prospective payment methods, fee schedules, and other such methods as the Commission may consider appropriate.

(b) Reports.—(1) By not later than July 1, 1990, the Commission shall submit a report to Congress on the study conducted under section (a) with respect to the portions of the study described in paragraphs (1), (2), and (3) of such subsection, and shall include in the report such recommendations as the Commission deems appropriate.

(2) By not later than March 1, 1991, the Commission shall submit a report to Congress on the study conducted under subsection (a) with respect to the portion of the study described in paragraph (4) of such subsection, and shall include such recommendations as the Commission deems appropriate.

Section 4002(d)(2) of the Omnibus Budget Reconciliation Act of 1990, Pub. L. 101-508: Study of the Area Wage Index Adjustments Based on Professional Occupational Component

(A) Study.—The Prospective Payment Assessment Commission shall examine available data from States and other sources measuring earnings and paid hours of employment of hospital workers by occupational category, and shall include in such examination an analysis of the impact of variation in occupational mix on the computation of the area wage index determined under section 1886(d)(3(E) of the Social Security Act.

(B) Report to Congress.—In its March 1991 report, the Commission shall include recommendations regarding the feasibility and desirability of modifying such area wage index to take into account occupational mix, including variations in occupational mix resulting from differences in State codes and requirements.

Section 4002(g)(4) of the Omnibus Budget Reconciliation Act of 1990, Pub. L. 101-508: ProPAC Study of Medicaid Payments to Hospitals

(A) Study.—The Prospective Payment Assessment Commission shall conduct a study of hospital payment rates under State plans for medical assistance under title XIX of the Social Security Act, and shall specifically examine in such study the relationship between payments under such plans and payments made to hospitals under title XVIII of such Act, and the financial condition of hospitals receiving payments under such plans, with particular attention to hospitals in urban areas which treat large number of individuals eligible for medical assistance under title XIX of such Act and other low-income individuals.

(B) Report.—By not later than October 1, 1991, the Commission shall submit a report to Congress on the study conducted under subparagraph (A) and shall include in such report such recommendations relating to requirements for payments to hospitals under title XIX of such Act as the Commission deems appropriate.

Section 4005(b) of the of the Omnibus Budget Reconciliation Act of 1990, Pub. L. 101-508: Development of National Prospective Payment Rates for Current Non-PPS Hospitals

(1) Development of Proposal.—The Secretary of Health and Human Services shall develop a proposal to modify the current system under which hospitals that are not subsection (d) hospitals (as defined in section 1886(d)(1)(B) of the Social Security Act) receive payment for the operating and capital-related costs of inpatient hospital services under part A of the Medicare program or a proposal to replace such system with a system under which such payments would be made on the basis of nationally-determined average standardized amounts. In developing any proposal under this paragraph to replace the current system with a prospective payment system, the Secretary shall—

(A) take into consideration the need to provide for appropriate limits on increases in expenditures under the Medicare program;

(B) provide for adjustments to prospectively determined rates to account for changes in a hospital's case mix, severity of illness of patients, volume of cases, and the development of new technologies and standards of medical practice;

(C) take into consideration the need to increase the payment otherwise made under such system in the case of services provided to patients whose length of stay or costs of treatment greatly exceed the length of stay or cost of treatment provided for under the applicable prospectively determined payment rate;

(D) take into consideration the need to adjust payments under the system to take into account factors such as a disproportionate share of low-income patients, costs related to graduate medical education programs, differences in wages and wage-related costs among hospitals located in various geographic areas, and other factors the Secretary considers appropriate, and

(E) provide for the appropriate allocation of operating and capital-related costs of hospitals not subject to the new prospective payment system and distinct units of such hospitals that would be paid under such system.

(2) Report.—(A) By not later than April 1, 1992, the Secretary shall submit the proposal developed under paragraph (1) to the Committee on Finance of the Senate and the Committee on Ways and Means of the House of Representatives.

(B) By not later than June 1, 1992, the Prospective Payment Assessment Commission shall submit an analysis of and comments on the proposal developed under paragraph (1) to the Committee on Finance of the Senate and the Committee on Ways and Means of the House of Representatives.

118

Section 4008(k) of the Omnibus Budget Reconciliation Act of 1990, Pub. L. 101-508: Prospective Payment System for Skilled Nursing Facilities

(1) Development of Proposal.—The Secretary of Health and Human Services shall develop a proposal to modify the current system under which skilled nursing facilities receive payment for extended care services under part A of the Medicare program or a proposal to replace such system with a system under which such payments would be made on the basis of prospectively determined rates. In developing any proposal under this paragraph to replace the current system with a prospective payment system, the Secretary shall—

(A) take into consideration the need to provide for appropriate limits on increases in expenditures under the Medicare program without jeopardizing access to extended care services for individuals unable to care for themselves;

(B) provide for adjustments to prospectively determined rates to account for changes in a facility's case mix, volume of cases, and the development of new technologies and standards of medical practice;

(C) take into consideration the need to increase the payment otherwise made under such system in the case of services provided to patients whose length of stay or costs of treatment greatly exceed the length of stay or cost of treatment provided for under the applicable prospectively determined payment rate;

(D) take into consideration the need to adjust payments under the system to take into account factors such as a disproportionate share of low-income patients, differences in wages and wage-related costs among facilities located in various geographic areas, and other factors the Secretary considers appropriate; and

(E) take into consideration the appropriateness of classifying patients and payments upon functional disability, cognitive impairment, and other patient characteristics.

(2) Reports.—(A) By not later than April 1, 1991, the Secretary (acting through the Administrator of the Health Care Financing Administration) shall submit any research studies to be used in developing the proposal under paragraph (1) to the Committee on Finance of the Senate and the Committee on Ways and Means of the House of Representatives.

(B) By not later than September 1, 1991, the Secretary shall submit the proposal developed under paragraph (1) to the Committee on Finance of the Senate and the Committee on Ways and Means of the House of Representatives.

(C) By not later than March 1, 1992, the Prospective Payment Assessment Commission shall submit an analysis of and comments on the proposal developed under paragraph (1) to the Committee on Finance of the Senate and the Committee on Ways and Means of the House of Representatives.

Section 4151(b)(2) of the Omnibus Budget Reconciliation Act of 1990, Pub. L. 101-508: Prospective Payment System for Hospital Outpatient Services

(A) Development of Proposal.—The Secretary of Health and Human Services shall develop a proposal to replace the current system under which payment is made for hospital outpatient services under title XVIII of the Social Security Act with a system under which such payments would be made on the basis of prospectively determined rates. In developing any proposal under this paragraph, the Secretary shall consider—

(i) the need to provide for appropriate limits on increases in expenditures under the Medicare program;

(ii) the need to adjust prospectively determined rates to account for changes in a hospital's outpatient case mix, severity of illness of patients, volume of cases, and the development of new technologies and standards of medical practice;

(iii) providing hospitals with incentives to control the costs of providing outpatient services;

(iv) the feasibility and appropriateness of including payment for outpatient services not currently paid on a cost-related basis under the Medicare

program (including clinical diagnostic laboratory tests and dialysis services) in the system;

(v) the need to increase payments under the system to hospitals that treat a disproportionate share of low-income patients, teaching hospitals, and hospitals located in geographic areas with high wages and wage-related costs;

(vi) the feasibility and appropriateness of bundling services into larger units, such as episodes or visits, in establishing the basic unit for making payments under the system; and

(vii) the feasibility and appropriateness of varying payments under the system on the basis of whether services are provided in a free-standing or hospital-based facility.

(B) Reports.—(i) By not later than January 1, 1991, the Administrator of the Health Care Financing Administration shall submit research findings relating to prospective payments for hospital outpatient services to the Committee on Finance of the Senate and the Committees on Ways and Means and Energy and Commerce of the House of Representatives. . . .

(ii) By not later than September 1, 1991, the Secretary shall submit the proposal developed under subparagraph (A) to such Committees.

(iii) By not later than March 1, 1992, the Prospective Payment Assessment Commission shall submit an analysis of and comments on the proposal developed under subparagraph (A) to such Committees.

Section 4201(b) of the Omnibus Budget Reconciliation Act of 1990, Pub. L. 101-508: ProPAC Study on ESRD Composite Rates

(1) In General.—(A) Study.—The Prospective Payment Assessment Commission (in this subsection referred to as the "Commission") shall conduct a study to determine the costs and services and profits associated with various modalities of dialysis treatments provided to end stage renal disease patients provided under title XVIII of the Social Security Act.

(B) Recommendations.—Based on information collected for the study described in subparagraph (A), the Commission shall make recommendations to Congress regarding the method or methods and the levels at which the payments made for the facility component of dialysis services by providers of service and renal dialysis facilities under title XVIII of the Social Security Act should be established for dialysis services furnished during fiscal year 1993 and the methodology to be used to update such payments for subsequent fiscal years. In making recommendations concerning the appropriate methodology the Commission shall consider—

(i) hemodialysis and other modalities of treatment,

(ii) the appropriate services to be included in such payments,

(iii) the adjustment factors to be incorporated including facility characteristics, such as hospital versus free-standing facilities, urban versus rural, size and mix of services,

(iv) adjustments for labor and non-labor costs,

(v) comparative profit margins for all types of renal dialysis providers of service and renal dialysis facilities,

(vi) adjustments for patient complexity, such as age, diagnosis, case mix, and pediatric services, and

(vii) efficient costs related to high quality of care and positive outcomes for all treatment modalities.

(2) Report.—Not later than June 1, 1992, the Commission shall submit a report to the Committee on Finance of the Senate, and the Committees on Ways and Means and Energy and Commerce of the House of Representatives on the study conducted under paragraph (1)(A) and shall include in the report the recommendations described in paragraph (1)(B), taking into account the factors described in paragraph (1)(B).

(3) Annual Report.—The Commission, not later than March 1 before the beginning of each fiscal year (beginning with fiscal year 1993) shall report its recommendations to the Committee on Finance of the Senate and the Committees on Ways and

Means and Energy and Commerce of the House of Representatives on an appropriate change factor which should be used for updating payments for services rendered in that fiscal year. The Commission in making such report to Congress shall consider conclusions and recommendations available from the Institute of Medicine.

Section 4207(c) of the Omnibus Budget Reconciliation Act of 1990, Pub. L. 101-508: Development of Prospective Payment System for Home Health Services

(1) Development of Proposal.—The Secretary of Health and Human Services shall develop a proposal to modify the current system under which payment is made for home health services under title XVIII of the Social Security Act or a proposal to replace such system with a system under which such payments would be made on the basis of prospectively determined rates. In developing any proposal under this paragraph to replace the current system with a prospective payment system, the Secretary shall—

(A) take into consideration the need to provide for appropriate limits on increases in expenditures under the Medicare program;

(B) provide for adjustments to prospectively determined rates to account for changes in a provider's case mix, severity of illness of patients, volume of cases, and the development of new technologies and standards of medical practice;

(C) take into consideration the need to increase the payment otherwise made under such system in the case of services provided to patients whose length of treatment or costs of treatment greatly exceed the length or cost of treatment provided for under the applicable prospectively determined payment rate;

(D) take into consideration the need to adjust payments under the system to take into account factors such as differences in wages and wage-related costs among agencies located in various geographic areas and other factors the Secretary considers appropriate; and

(E) analyze the feasibility and appropriateness of establishing the episode of illness as the basic unit for making payments under the system.

(2) Reports.—(A) By not later than April 1, 1993, the Secretary of Health and Human Services shall submit the research findings upon which the proposal described in paragraph (1) shall be based to the Committee on Finance of the Senate and the Committee on Ways and Means of the House of Representatives.

(B) By not later than September 1, 1993, the Secretary shall submit the proposal developed under paragraph (1) to the Committee on Finance of the Senate and the Committee on Ways and Means of the House of Representatives.

(C) By not later than March 1, 1994, the Prospective Payment Assessment Commission shall submit an analysis of and comments on the proposal developed under paragraph (1) to the Committee on Finance of the Senate and the Committee on Ways and Means of the House of Representatives.

H.R. Rep. No. 964, 101st Cong., 1st Sess. (1990)

(Report of the Committee of Conferees, Pub. L. 101-508)

In performing this function [developing and modification of reimbursement policies], the conferees intend that ProPAC would include in its analysis and recommendations, proposals for changes in policies regarding: (1) payment for inner-city hospitals, including appropriate recognition of bad debt and charity care costs; (2) payment for rural hospitals including recommendations on appropriate responses to issues affecting access to health care services in rural areas; and (3) policies which help constrain the costs of health care to employers, including changes in Medicare and its payment policies which may affect other payers.

S.R. Rep. No. 516, 101st Cong., 2nd Sess. (1990)

(Report of the Senate Committee on Appropriations, H.R. 5257)

The Committee, therefore, requests that ProPAC issue a report listing (1) the adjustments that have been made to PPS since its inception (for example changes in standardized amount, outlier pool, consideration of part-time labor); and (2) the amount of increased payments (taking inflation into

account) for PPS years 1-5 and what rural hospitals would have received if these adjustments had been in place from the system's beginning.

In addition, the Committee request that ProPAC in its 1991 report address in detail the impact of less-than-average patient volume on overhead costs and reimbursement, especially on small hospitals. This Committee remains concerned that the PPS system, which is based on averages, inherently is inappropriate to small-volume hospitals.

Given the history of inequitable inpatient payments and the widespread concern over new systems of outpatient payments, the Committee finds it is necessary to investigate whether outpatient payment systems also will be biased against smaller rural providers. The Committee requests that ProPAC in its 1991 report identify all potential outpatient payment biases against small rural hospitals, and recommend actions to correct them.

The Committee is concerned that the Federal Office of Rural Health Policy lacks essential resources such as computer capability in order to fulfill its statutory mandate to provide impact analyses of proposed Medicare and Medicaid regulations. The Committee instructs ProPAC to provide its resources to the Office of Rural Health Policy in order to facilitate these analyses. The Committee expects The Commission to provide technical assistance to the Office of Rural Health Policy.

The Committee urges ProPAC to continue to study the use of nurse practitioners and other nonphysician providers in alternative settings to acute care and long-term institutional care.

Section 3(d) of the Medicaid Voluntary Contribution and Provider-Specific Tax Amendments of 1991, Pub. L. 102-234: Study of Medicaid DSH Payment Adjustments

(1) In General.—The Prospective Payment Assessment Commission shall conduct a study concerning—

(A) the feasibility and desirability of establishing maximum and minimum payment adjustments under section 1923(c) of the Social Security Act for hospitals deemed disproportionate share hospitals under State medicaid plans, and

(B) criteria (other than criteria described in clause (i) or (ii) of section 1923(f)(1)(D) of such Act) that are appropriate for the designation of disproportionate share hospitals under section 1923 of such Act.

(2) Items Included In Study.—The Commission shall include in the study—

(A) a comparison of the payment adjustments for hospitals made under such section and the additional payments made under title XVIII of such Act for hospitals serving a significantly disproportionate number of low-income patients under the medicare program; and

(B) an analysis of the effect the establishment of limits on such payment adjustments will have on the ability of the hospitals to be reimbursed for the resource costs incurred by the hospitals in treating individuals entitled to medical assistance under State medicaid plans and other low-income patients.

(3) Report.—Not later than January 1, 1994, the Commission shall submit a report on the study conducted under paragraph (1) to the Committee on Finance of the Senate and the Committee on Energy and Commerce of the House of Representatives. Such report shall include such recommendations respecting the designation of disproportionate share hospitals and the establishment of maximum and minimum payment adjustments for such hospitals under section 1923 of the Social Security Act as may be appropriate.

H.R. Rep. No. 103-213, 103rd Cong., 1st Sess. (1993)

(Report of the Conference Committee, Omnibus Budget Reconciliation Act of 1993, Pub. L. 103-66)

The conferees note that the Prospective Payment Assessment Commission has expressed concern that the Secretary's outlier policy penalizes hospitals that receive a large number of transfer cases. The conferees expect that the Commission will evaluate whether the changes in outlier policy required by this Act will be sufficient to reduce the risk of large losses on transfer cases for such hospitals and make recommendations regarding whether additional changes in payment methodology would be appropriate.

[FR Doc. 96–13613 Filed 5–30–96; 8:45 am]
BILLING CODE 4120–01–C

federal register

Friday
May 31, 1996

Part III

Department of Commerce

National Oceanic and Atmospheric Administration

50 CFR Part 651

Northeast Multispecies Fishery; Amendment 7; Final Rule

DEPARTMENT OF COMMERCE

National Oceanic and Atmospheric Administration

50 CFR Part 651

[Docket No. 960216032–6138–03; I.D. 021296E]

RIN 0648–AI94

Northeast Multispecies Fishery; Amendment 7

AGENCY: National Marine Fisheries Service (NMFS), National Oceanic and Atmospheric Administration (NOAA), Commerce.

ACTION: Final rule.

SUMMARY: NMFS issues this final rule to implement approved measures contained in Amendment 7 to the Northeast Multispecies Fishery Management Plan (FMP) including a resubmitted part of the amendment. These regulations: Establish an annual target Total Allowable Catch (TAC) for regulated species; accelerate the current days-at-sea (DAS) effort reduction program; eliminate most of the exemptions to the effort control program and revise the requirements for taking time out of the fishery; add new closed areas; restrict fisheries in the Gulf of Maine/Georges Bank (GOM/GB) and Southern New England (SNE) regulated mesh areas having more than a minimal bycatch of regulated species; establish the current experimental Nantucket Shoals dogfish fishery as an exempted fishery; modify the permit categories; establish restrictions on charter/party and recreational vessels; and revise and expand the existing framework provisions. The intended effect of this rule is to rebuild multispecies stocks. In addition, NMFS informs the public of the approval by the Office of Management and Budget (OMB) of the collection-of-information requirements contained in this rule and publishes the OMB control numbers for these collections.

EFFECTIVE DATE: July 1, 1996.

ADDRESSES: Copies of Amendment 7, its regulatory impact review (RIR) and the initial regulatory flexibility analysis (IRFA) contained within the RIR, and the Final Supplemental Environmental Impact Statement (FSEIS), and copies of the resubmitted part and its supporting documents, are available from Douglas Marshall, Executive Director, New England Fishery Management Council, Suntaug Office Park, 5 Broadway (US Rte. 1), Saugus, MA 01906–1097. Comments regarding the collection-of-information requirements contained in this final rule should be sent to Andrew A. Rosenberg, Director, Northeast Region, NMFS, One Blackburn Drive, Gloucester, MA 01930–2298 and to the Office of Information and Regulatory Affairs, OMB, Washington, D.C. 20503 (Attention: NOAA Desk Officer).

FOR FURTHER INFORMATION CONTACT: Susan A. Murphy, Fishery Policy Analyst, 508–281–9252.

SUPPLEMENTARY INFORMATION: This final rule implements approved measures contained in Amendment 7 to the multispecies FMP which was approved by NMFS on behalf of the Secretary of Commerce (Secretary) on May 16, 1996. Three measures contained in Amendment 7, as originally submitted, were disapproved by NMFS on behalf of the Secretary when they were submitted and consequently were not a part of the proposed rule published on March 5, 1996 (61 FR 8540). Reasons for disapproval of those measures were given in the proposed rule and are not repeated here. Two of these measures, a provision that would allow additional DAS for vessels enrolled in the Large Mesh Individual DAS category and a 300-lb (136.1-kg) possession limit when fishing in an exempted fishery with 8-inch (20.32-cm) mesh, were resubmitted by the New England Fishery Management Council (Council). The latter measure was again disapproved.

The provision that would allow additional DAS for vessels enrolled in the Large Mesh Individual DAS category was contained in a proposed rule published on April 18, 1996 (61 FR 16892). During the public comment period, no comments were received. This measure was approved by NMFS on behalf of the Secretary on May 17, 1996, and is also implemented by this rule.

Details concerning the justification for and development of Amendment 7 were provided in the notice of proposed rulemaling (61 FR 8540, March 5, 1996) and are not repeated here.

In that notice, NMFS requested the public to comment on all proposed measures, but to focus on several measures of concern in particular. After NMFS reviewed the amendment and the public comments received relative to the amendment and the proposed rule, NMFS disapproved three additional measures based on its determination that they are inconsistent with one or more of the national standards of the Magnuson Fishery Conservation and Management Act (Magnuson Act) or other applicable law. These measures are: A call-in requirement for charter/party vessels; counting DAS for gillnet vessels by the amount of time that gillnet gear is in the water; and a winter flounder possession allowance when fishing in the Mid-Atlantic regulated mesh area.

Disapproved Measures

Amendment 7 imposes new restrictions on charter and party vessels. Such vessels may, under certain circumstances and criteria, fish under either the recreational or commercial requirements of these regulations. A call-in requirement for charter/party vessels was proposed by the Council to provide a way for law enforcement officers to discern which of these requirements a vessel was subject to. This measure has been disapproved because NMFS believes that sufficient means exist to distinguish recreational and commercial activities. Further, the U.S. Coast Guard (USCG) and NMFS Office of Law Enforcement have recommended against adoption of this measure because it would not improve enforceability of the charter/party restrictions. This recommendation led the Council, in their comments on the proposed rule, to also recommend against adoption of this measure. Because this requirement would place a significant administrative burden on the call-in system with no discernable benefit, it is neither consistent with National Standard 7 nor Executive Order 12866 and is disapproved.

The second disapproved measure proposed counting gillnet DAS as time when gear is in the water, rather than time when the vessel is away from the dock. The Council proposed this measure in an attempt to resolve perceived inequities in the DAS accounting methods for fixed gear versus mobile gear. However, the proposal did not adequately resolve enforcement difficulties of monitoring the amount of time gear was in the water or the administrative problems in determining baseline allocations for gillnet Individual DAS category vessels. Moreover, the Council itself has expressed concern with this measure and has initiated the process to reconsider the method for counting gillnet DAS structure. Because the administrative burden of establishing a method of accounting and allocating DAS is extensive, the efficiency standards of E.O. 12866 and National Standard 7 would be compromised by the almost immediate change to the system that the Council is contemplating. Disapproval of this measure means that DAS for gillnet vessels will be counted in the same way that DAS are counted for all other vessels, as time away from port.

The measure that would have allowed a bycatch of winter flounder by vessels fishing in the Mid-Atlantic regulated mesh area (10 percent by weight of all other species on board or 200 lb (90.7 kg), whichever is less) has also been disapproved. The most recent assessment of winter flounder advises that fishing mortality should be reduced immediately to the lowest possible level. Therefore, there is no justification for treating this regulated species any differently than others in similar condition. Although the cap on the allowed catch would discourage vessels from targeting winter flounder, this measure would reduce the beneficial conservation effect of the DAS program on the winter flounder resource and is, therefore, inconsistent with National Standard 1.

Approved Measures

Amendment 7 establishes a procedure for setting annual target TAC levels for specific cod, haddock, and yellowtail flounder (CHY) stocks (GB CHY, SNE yellowtail flounder, and GOM cod), and an aggregate TAC for the other regulated species (pollock, redfish, white hake, witch flounder, American plaice, winter flounder and windowpane flounder). The procedure would be used annually to set target TACs, with the exception of target TACs for the 1996 fishing year (May 1, 1996, through April 30, 1997), which are set as follows:

TABLE 1.—1996 TAC SPECIFICATIONS

Species/area	1996 Target TACs (metric tons)
Georges Bank cod	1,851
Georges Bank haddock	2,801
Georges Bank yellowtail flounder	385
Gulf of Maine cod	2,761
Southern New England yellowtail flounder	150
Aggregate for remaining regulated species	25,500

DAS allocations are reduced in two equal increments at the start of the 1996 and 1997 fishing years from current levels to the full 50 percent reduction called for originally in the final year of Amendment 5 to the FMP. In addition, because the effective date of this rule is 2 months after the start of the 1996 fishing year, which commenced on May 1, 1996, 1996 DAS allocations are prorated based on the amount of time remaining in the 1996 fishing year, or 83 percent (10 months/12 months).

Amendment 7 eliminates the current exemptions to the DAS program (vessels 45 ft (13.7 m) and less, limited access Hook-Gear and Gillnet vessels) and allocates either Individual DAS or Fleet DAS to these vessels, except for vessels 30 ft (9.1 m) or less in length. Limited access vessels 30 ft (9.1 m) or less in length may choose either to fish under the DAS program or be restricted to a possession limit of CHY up to a maximum combined weight of 300 lb (136.1 kg).

This rule eliminates the existing requirement for vessels in the Fleet DAS category to take blocks of time ''out of the multispecies fishery.'' It also eliminates the layover days currently required after completion of a multispecies trip. However, all vessels subject to the DAS effort control program are required to take one 20-consecutive-day block of time out of the multispecies fishery between March 1 through May 31. Vessels 30 ft (9.1 m) or less in length issued a Small Vessel permit and vessels issued an open access Handgear permit are not allowed to fish for, possess, or land regulated multispecies between March 1 and March 20.

The existing time/area closures to sink gillnet vessels specified to reduce harbor porpoise bycatch are now also closed to other gear types as part of the effort reduction program. These areas are known as the Northeast Closure Area, the Mid-Coast Closure Area, and the Massachusetts Bay Closure Area. Because Small Mesh Area 1 lies entirely within the Mid-coast Closure Area, the season termination date for this exemption is changed from November 15 to October 31, which coincides with the closure of the Mid-coast area.

This final rule prohibits vessels from fishing in the GOM/GB and SNE regulated mesh areas, unless they are fishing in an authorized multispecies fishery, under a scallop DAS, or in an exempted fishery. An exempted fishery is one in which it has been determined that there is a minimal bycatch of regulated species.

The existing Nantucket Shoals experimental dogfish fishery has been found to meet the criteria for this exemption. This rule permanently exempts that fishery from June 1 through October 15.

Because the exemptions to the DAS program are removed by the amendment, some limited access permit categories have been eliminated and vessels in those categories have been reassigned to an appropriate category. A new category is established for vessels in the current Hook-Gear open access category and an opportunity to qualify for a new limited access Hook-Gear permit under specified criteria is granted. New limited access permit categories are also established for vessels electing to fish with large mesh. Vessels reassigned as a result of this rule will have 45 days from the date of publication of this rule to change their 1996 permit category.

Three new open access permit categories established are Handgear, Charter/Party and Scallop Multispecies Possession Limit, each with specific possession and gear restrictions.

This rule imposes several new restrictions for recreational and charter/party vessels, including a 20 inch (50.8 cm) minimum fish size for cod and haddock for the first year of the plan, increasing to 21 inches (53.3 cm) in the second year, a prohibition on the sale of multispecies finfish, and a 10 fish possession limit on cod and haddock, combined, for individual recreational anglers.

The FMP's existing framework provisions are revised to remove the 10 percent cap on annual reductions in fishing mortality and to allow implementation of measures to protect right whales and other marine mammals through the framework process. An annual process to set target TACs, review progress towards fishing mortality goals and to make any necessary changes in the management program is also established.

The Mid-Atlantic regulated mesh area is redefined to include all New York and Connecticut state waters.

Vessels fishing in the SNE regulated mesh area are authorized to retain a bycatch of skate or skate parts up to 10 percent of the total weight of other fish possessed on board.

A provision is added that allows the costs of observer coverage to be funded by sources other than NMFS.

The haddock possession limit is increased from 500 (227 kg) to 1,000 lb (453.6 kg) for vessels fishing under a multispecies DAS. The tote and box volumetric equivalency measure for determining the weight of possession limits is eliminated, instead, compliance with possession limits will be determined by shoreside weighing. However, vessels will be required to carry one tote on board for use by USCG boarding parties to estimate possible excessive catches.

Comments and Responses

Written comments were submitted by the Associated Fisheries of Maine, Offshore Mariners Association, Inc., Gloucester Fishermen's Wives Association, Massachusetts Fishermen's Partnership, Gloucester Fishermen's Committee, Maine Department of Marine Resources (DMR), Wildlife Habitat Preservation Association, Inc.,

Senator Judd Gregg, Senator Bob Smith, Senator Olympia J. Snowe, Senator William S. Cohen, Congressman Patrick J. Kennedy, Seafarers International Union of North America, Conservation Law Foundation, Mass Audubon Society, The Groundfish Group of Associated Fisheries of Maine, Associated Fisheries of Maine, Maine Fishermen's Wives Association, Federation of Inshore Seafood Harvesters, Darling Marine Center of the University of Maine, New Bedford Seafood Coalition, Massachusetts State Senator Bruce Tarr, Gloucester United, Vessel Services Inc., the New England Fishery Management Council (NEFMC), Center for Marine Conservation, Environmental Defense Fund, Cape Cod Commercial Hook Fishermen's Association, Resource Trading Co., King & Sons Fishing Co., Inc., Cape Ann Gillnetters' Association, Action, Inc., Wellspring House, Inc., Massachusetts Lobstermen's Association, Inc., Connecticut Department of Environmental Protection (DEP), the Marine Mammal Commission, and approximately 290 individuals.

1. Comments in Favor of Approval of Amendment 7

Comment 1: An association and several environmental organizations stated that Amendment 7 should be approved, and 136 individuals stated that Amendment 7 should be approved without change. Many commenters expressed concern for the health and viability of the resource and urged the Secretary not to give in to pressure to weaken, modify or otherwise deviate from the plan.

Response: Most of the measures proposed in Amendment 7 have been approved.

2. Comments on Elimination of the Open Access Possession Limit and Hook-Gear-Only Permit Categories

Comment 2: Several commenters opposed elimination of the Possession-Limit permit category and/or the 500-lb (226.8-kg) allowance of regulated species associated with this permit. These comments are summarized as follows:

A commenter stated that he invested in his vessel while fishing under the 500-pound (226.8-kg) possession limit in the open access category and that under Amendment 7, he will lose his right to do so, due to the elimination of the open access possession limit permit.

An association stated that vessels in the Possession Limit permit category that may have qualified for a limited access permit under Amendment 5 should be allowed to prove their eligibility and move into a DAS category. The commenter further explained that a few vessels opted for a Possession Limit permit though their history would have qualified them for a limited access permit under the DAS program. The association further stated that it would have been impossible for these vessel owners to know that this permit category would be eliminated at some future date.

Another commenter stated that elimination of the Possession Limit permit category denies him access to the whiting fishery. He stated that his two vessels surrendered their limited access multispecies permits during 1996, because he lengthened his vessels beyond the upgrade restrictions of the multispecies FMP to maximize their productive capacities before the effective date of Amendment 5 to the Atlantic Mackerel, Squid and Butterfish FMP (which allows no increase in size after implementation). He stated that since the vessels only fished a few months each year for whiting, he had planned to continue to do so under the Possession Limit category.

Another commenter stated that under Amendment 7 those fishers formerly fishing for whiting and other small mesh species in the experimental whiting grate fishery, to use as bait under the Possession Limit category will not be able to continue this practice. He stated that this gives bluefin tuna fishers with a limited access multispecies permit an unfair advantage.

Congressman Patrick J. Kennedy (RI) forwarded an association's petition containing 98 signatures and 23 individual letters, all concerned with the elimination under Amendment 7 of the possession limit of regulated species bycatch allowed when fishing for non-regulated species out of the DAS effort reduction program. The association also forwarded the petition and letters directly to the Director, Northeast Region, NMFS (Regional Director). They further stated that the marketable bycatch of regulated species would be wastefully discarded. Twenty-three of the commenters stated that they would have to fish day and night to fully utilize the full 24 hours of the groundfish day DAS. They all sought reinstatement in Amendment 7 of the possession limit of regulated species when fishing for non-regulated species out of a DAS effort control program.

Another commenter stated he does not qualify for the new limited access hook permit, because he did not land 500-lb (226.8-kg) of regulated species during the qualifying year, which is one of the qualifying criteria. He said that it is arbitrary and unfair to make just that permit category meet certain criteria. He further asked whether any consideration was given for illness or investments. He added that the labor intensive, environmentally sound hook-fishery had no negative impacts on the control of future effort.

The Maine DMR commented favorably on the open-access handgear-only permit category provision of Amendment 7. It added that this permit category provides a lowcost, egalitarian point of entry for new participants in the fishery within sensible conservation rules.

The Maine DMR commented in opposition to the eligibility requirements for vessels desiring to qualify for the new limited access hook-gear permit-category, specifically, the requirement that applicants must have filed logs for their vessels by January 26, 1996 for the period June 1, 1994–June 1, 1995. It stated that since NMFS has allowed logbook filers to file late this year as part of a well-publicized education effort designed to achieve high compliance by next year, it is unreasonable and inequitable to disallow the same extension to those in the open access hook permit category, which was less intensively regulated under Amendment 5. It explained that participants in this category are less likely to have understood and complied with log requirements.

Response: The Council and NMFS are aware that certain participants in the groundfish fishery may be affected by the elimination of the open access possession limit permit category, but NMFS has determined that conservation needs outweigh the negative impact on certain individual fishers.

The 500-lb (226.8-kg) regulated species catch allowance is eliminated by this rule. The control date for entry into the multispecies fishery was February 21, 1991, at which time the public was put on notice that future entry into the fishery could be limited and that those investing in the fishery after that date were doing so at risk. The condition of the stock complex has declined since that time and more restrictive measures have been implemented in Amendments 5 and 6 to the FMP. Amendment 7 eliminates the 500-lb (226.8-kg) possession allowance in part because of its open-access nature. While Amendment 7 imposed significant restrictions on the directed multispecies fleet through DAS reductions, allowing a potentially unlimited number of vessels to land 500 lb (226.8 kg) of regulated species per trip would be inconsistent with the goals of the FMP.

Regarding the commenter's concerns about being ''shut out'' of the whiting

fishery as a result of disapproval of the Limited-Access Possession Limit permit category, NMFS disapproved that category because of several flaws that were described in the proposed rule. The Council has reconsidered the disapproval of this category and will resubmit a revised proposal that, if approved, would allow open access to the non-regulated multispecies fisheries, i.e., whiting, red hake and ocean pout. One of the improvements made to the permit proposal by the Council is the designation as an open access permit, which exempts vessels in this category from the upgrade requirements.

As to eligibility requirements for the new limited-access hook-gear permit category, Amendment 7's deadline for filing logs for the period June 1, 1994–June 1, 1995 was established as January 26, 1996, for purposes of qualifying into the fishery. This deadline is much more liberal than the Council's requirement that all logs be filed in a timely manner, i.e., within 15 days of the fishing trip. Additionally, those applicants denied a new limited-access hook-gear permit may appeal any denial under the multispecies regulations.

And finally, the commenter concerned about qualifying for the Hook-Gear-Only permit will have two options: (1) A vessel owner may elect to fish with hand-held gear only and land up to a total of 300 lb (136.1 kg) of CHY, or (2) a vessel owner may elect to apply for the hook-only limited access permit and, if denied, may appeal the denial on the basis that circumstances beyond the applicant's control prevented attainment of the qualifying criteria.

3. Comment on the Framework Provision for Annual Adjustments to TACs and Restrictions

Comment 3: The Maine DMR stated that a 2-year adjustment process, with frameworks in the interim, would provide a more constructive and science-based process than the annual adjustment process.

Another commenter stated that the tight timeline established in the framework adjustment process that provides only 1 month prior to the beginning of a fishing year to adapt to the adjusted measures is insufficient.

Response: The changing conditions of fish stocks warrant that frameworking occur at least annually, while considering factors such as the most recent landings data as it compares with the previous year's target total allowable catches. The timeline established for the framework adjustment process was decided on after consideration of comments and public input during public hearings on the Amendment. Similarly, the adjustments that may be proposed as a result of the framework process will undergo a public participation period, during which sufficiency of notice prior to the fishing year can be factored in as the Council deliberates on the adjustments. The alternatives to this timeframe are to reduce the time period for public input or, to begin the adjustment process earlier in the year. This latter alternative is not desirable because important data and information about the fishery that should be considered will most likely be unavailable earlier in the year.

In addition, while a final rule may be published 1 month prior to its effective date, this process begins 6 months in advance of the next fishing year to allow the public several opportunities to participate in development of measures, to become aware of changes that would result from implementation, and to prepare for implementation in its final form.

Comment 4: An environmental organization stated that the process for annual review and adjustment of management measures described in § 651.40(a) of the proposed rule is too open-ended and likely to result in a stalemate between the Council and the Regional Director. Under § 651.40(a)(6), if the Council fails to submit a recommendation to the Regional Director that meets the FMP goals and objectives, and the Council also rejects all other options developed by the Multispecies Monitoring Committee, then the Regional Director must resort to emergency regulations and/or a Secretarial amendment.

The commenter recommended that § 651.40(a) be disapproved (in whole or in part) until it includes default annual adjustments that reflect how the actual catch compares to the target TACs or target catch rates. It opines that the catch of at least cod and yellowtail flounder in the 1996 fishing year is likely to far exceed the target TACs, so that DAS reductions initially assigned for the 1997 fishing year would be grossly inadequate to reduce fishing mortality to $F_{0.1}$. The commenter included suggested language for a default annual adjustment specification, which it feels is needed because the Council has a history of being unable to make decisions quickly for conservation purposes that are unpopular with commercial fishermen.

Response: If the resource continues to decline in the short-term, NMFS expects the Council to be confronted with difficult decisions regarding adjustments to measures, just as it was confronted by difficult options for this Amendment. The framework provision of the FMP was approved because NMFS believes the Council will submit an appropriate recommendation even if those of the Monitoring Committee are rejected. The default mechanism, in terms of overall resource protection, is to keep present restrictions in place. To disapprove this measure would leave no adjustment mechanism in place.

4. Comments on the Need for Amendment 7 and the Scientific Basis for the FMP

Comment 5: A commenter stated that the proposed rule identifies only a GB and SNE yellowtail flounder stock in Table 1 of its specification of 1996 TACs. He points out that NMFS, in its ''Status of Fishery Resources off the Northeastern U.S. Technical Memorandum-NMFS-NE–108,'' continues to identify and characterize a Cape Cod and mid-Atlantic stock as well. His concern is that this omission may lead to inappropriate catches based solely on the status of the GB and SNE stocks. He recommends that NMFS issue a separate TAC for at least the Cape Cod stock of yellowtail flounder for 1996 and that the Northeast Multispecies Monitoring Committee consider continuing this practice in subsequent TAC specifications.

Response: Tagging studies and geographical patterns of landings and survey data indicate discrete yellowtail stocks in GB, SNE, Cape Cod and the Mid-Atlantic. However, the Middle Atlantic and Cape Cod yellowtail stocks have historically been very small relative to the SNE and GB stocks, respectively. While NMFS recognizes that this may no longer be the case, the TACs specified are conservative. The quality of available assessment data for the Mid-Atlantic and Cape Cod stocks is insufficient to permit a quantitative estimate of stock abundance, exploitation rates or TACs. The status of all of these stocks is essentially the same, in that they are all overexploited. Therefore, it is appropriate to include yellowtail flounder from Cape Cod with the Georges Bank TAC for that species and yellowtail flounder from the Mid-Atlantic with the Southern New England TAC for that species for management purposes. The Council will have the option of including these stocks within existing TACs or to specify a separate TAC for the Cape Cod stock, if necessary. At present there seems to be little incentive for directed fishing on these stocks because of their low abundance.

Comment 6: An organization stated that Amendment 7 is unnecessary at this time, and, in fact, Amendment 5 is

working and needs more time to reach the goals of the Council and NMFS.

Response: Amendment 5 was designed to correct the overfished condition on the Multispecies Fishery by a 50 percent reduction of fishing mortality over a 5 to 7-year period. However, by the time this amendment took effect (in 1994), spawning stock biomass levels for GB cod, haddock and yellowtail were at or near historic lows and reductions in fishing mortality of more than 50 percent were needed immediately to arrest further declines of GB cod and yellowtail (advisory presented at the August 1994 Stock Assessment Review Committee (SARC) plenary). By 1993, landings for GB cod, haddock and yellowtail had declined to 30 percent of MSY; 1994 landings were projected to decline to 23 percent of MSY; and further declines were projected for 1995. As reported at the Plenary, GB haddock and yellowtail stocks have collapsed—and it remains clear that to avert stock collapse for GB cod, and to begin the rebuilding process, greater reductions in fishing mortality over a shorter period of time are necessary than provided for in Amendment 5.

Comment 7: Senator Olympia J. Snowe (ME) and Senator William S. Cohen (ME) requested that the Secretary establish an independent panel to review the science that is the basis of this plan. They further suggested that such a review should be conducted during the first year of the plan's implementation, and its results used as adjustments for the second year of the plan are formulated. Additionally, they requested that the peer review include a reassessment of the science that supports the FMP and specifically, they would require that scientific research must address the effectiveness of different management tools including seasonal area closures and gear modifications like mesh size.

Response: An intensive peer-review process already exists, through the Stock Assessment Workshop (SAW). Assessments are prepared by subcommittees including scientists from state and Federal agencies and academic institutions, reviewed by the Stock Assessment Review Committee (SARC), and presented to managers at SAW Plenary sessions. Industry or other interested parties are welcome to participate. The SARC, and the Multispecies Monitoring Committee (MMC), created under the terms of Amendment 7, will be available for periodic reviews of the science including evaluations of the relative effectiveness of different management tools. The Council can instigate such a review through its Science and Statistical Committee.

Comment 8: An environmental organization stated that the measures specified in the proposed rule cannot result in the 80-percent reduction in fishing mortality rate (F) that is needed to reach the Amendment's target of $F_{0.1}$, because the DAS reduction specified in § 651.22(b) for the 1997 fishing year is only 50 percent from the initial baseline. The F reduction that will result from a 50-percent reduction in DAS is certain to be less than 50 percent because of compensatory increases in other aspects of fishermen's efforts. It added that no analyses were presented to the Council during development of Amendment 7 that suggested that other existing or proposed management measures for groundfish (including the closed areas) would accomplish the remaining required reduction in F.

Response: NMFS understands that the DAS reduction target is 50 percent at the end of a 2-year timeframe. Analyses of the effects of the closed areas implemented by this rule were presented to the Council which projected that an additional 30 percent reduction in F would be realized through modifications which have been made to time/area closures and inclusion of additional vessel classes under DAS limits. Also, the Council will adjust the target TAC (upward or downward) as stock size changes are observed and will adjust the management measures as needed to keep catches below the target.

Comment 9: An environmental organization stated that improvements in spawning stock biomass (SSB) expected under the assumptions built into the proposed rule should be clearly predicted, and used as a secondary yardstick for the performance of the overall program. Any time actual estimated SSBs fall significantly below predicted SSBs, reanalysis of SSB and population projections should occur, and emergency measures should be adopted to restore progress toward threshold SSBs. For this purpose of establishing a trigger for reanalysis and emergency measures, ''fall significantly below'' should be defined precisely in advance as a percentage shortfall as low as possible approaching 10 percent, but above the statistical margin of error.

Response: Such questions would fall within the purview of the SARC and the MMC. NMFS expects that the relative effectiveness of different measures will be examined routinely as part of the monitoring process for Amendment 7.

Comment 10: An environmental organization stated that tests should be designed to measure the efficacy of each important management measure, such that its contribution to the overall mortality reduction program can be determined, and that such additional mortality reduction measures can be implemented with greater certainty when target TACs are exceeded. Examples include the seasonal closure of certain areas, which will likely reduce seasonal mortality, but which may or may not reduce annual fishing mortality, and which may or may not enhance spawning success and recruitment to the overall population.

Response: Again, such questions would fall within the purview of the SARC and the MMC.

Comment 11: An environmental organization stated that GOM cod stocks remain overexploited and are inadequately addressed in the proposed rule. It added that the proposed rule establishes a biological reference point for GOM cod with fishing mortality equal to F(max)—potentially too high for this stock, especially in light of the uncertainty in the relationship between fishery management practices and actual fishing mortality—and a target TAC that is very high.

Response: Fishing at Fmax (0.27) for GOM cod would represent a 70-percent reduction in fishing mortality from 1993 levels, and is in fact below the overfishing definition level (F20%=0.35) for this stock. NMFS believes, based on the best scientific information, that specification of a TAC corresponding to the Fmax level for this stock is appropriate as a first step in the rebuilding process. Effects and implications would be subject to review by the MMC.

5. Comments on the Area Closures and Time Periods

Comment 12: The Maine DMR stated that the GOM closures should be replaced with targeted closures of specified areas based on spawning, pre-spawning and juvenile fish habitats. DMR added that the proposed GOM closures are unfocused and a relatively ineffective conservation tool that will have serious impacts on its industry.

Senator Olympia J. Snowe (ME) and Senator William S. Cohen (ME) urged that any additional closures be carefully targeted to protect specific areas with value as spawning, pre-spawning, and juvenile fish habitats.

A commenter stated that the November and December (Mid-coast) closure may have validity for gillnets as pertains to harbor porpoises, but that draggers have zero interaction with harbor porpoises.

A commenter stated that the November and December closure time

period would cause New Hampshire day boats (trawlers) to tie to the dock during this 2-month period.

Another commenter stated that the Mid-coast closure area is subject to an additional 30-day timeframe as compared to the other two closure areas. The Mid-coast small vessel fleet thus bears an additional burden when compared to other areas with 30-day closures.

Response: The GOM closures were adopted as a default mechanism to meet Amendment 7 goals while other possible closed areas were investigated. Because the purpose of the GOM closed areas is to reduce fishing mortality by the shortfall created when DAS reductions alone were insufficient (and not solely to protect harbor porpoises), the impacts on the industry are acknowledged and incorporated into the analysis of impacts of Amendment 7. The GOM closures, which were previously in place to protect harbor porpoises, now serve a dual purpose until alternative areas are identified. A Council subcommittee has been assigned to examine alternative areas having equivalent or greater value in reducing fishing effort and will consider changing the area closures through the framework adjustment process.

Amendment 7 does not require vessels to tie to the dock during the closure periods, but many smaller vessels are not able to fish safely offshore, beyond the GOM area closures. Again, the purpose of the closed areas is to reduce fishing effort by the shortfall created when DAS alone were insufficient.

An alternative to the closed areas was to reduce DAS further, but that alternative was rejected by the Council based, in part, on public and industry comment which indicated a preference for flexibility.

During the GOM closures, small vessel owners have the option of tying to the dock, seek alternative ports or alternative fisheries. In regard to the 2-month time period, although this closure is for a longer period of time, it occurs at a time of the year when weather is a factor and fishing activity is limited. Thus, to achieve equivalent conservation benefit, a longer period of time is necessary as compared to a closure occurring in the spring, summer or early fall months.

Comment 13: A commenter stated that the larger vessels, which account for the most groundfish harvesting capacity and production, have the capability to merely exit the area closures and fish outside the boundaries thus not contributing to any effort reduction or fishing mortality reduction. The commenter further stated that the inshore and small boat sector thus bears the most burden of the closures and added that most of these vessels must now enroll in the DAS program due to elimination of the 45-ft (13.7-m) exemption. The commenter summarized that this is unfair and inequitable amongst users and participants and creates an unfair allocation circumstance.

Response: Amendment 7 implements a broad set of measures affecting all sectors of the industry necessitated by severe overfishing on cod, haddock and yellowtail flounder. Larger vessels, unlike small inshore vessels, contribute to the effort reduction goals because they are subject to additional closed areas offshore where concentrations of multispecies are traditionally found. Unlike the inshore areas, which are closed for limited periods, these offshore areas are closed permanently. Amendment 7 eliminates some of the exemptions from the DAS program that were established by Amendment 5 to ensure that all vessels contribute toward the rebuilding goals. Amendment 5 tried to alleviate some of the burden on small vessels, but it is no longer possible to do this without sacrificing the more rigorous conservation objectives of Amendment 7.

Comment 14: A commenter noted that Amendment 7 does not exempt mid-water trawls from the closed areas, but authorizes their exemption at some future time based on the analysis of observer data. The commentor added that in a report given by the Regional Director to the Council, the Regional Director stated that preliminary data showed zero bycatch of groundfish in mid-water trawls. If the final analysis bears this out, the commenter requested that mid-water trawls be exempt from the closed areas. The commentor added that such an exemption would not only address the high cost of rerigging but would also address the possibility of being precluded from large areas of potential herring catch grounds. The commentor indicated a willingness to alleviate any enforcement concerns by placing Vessel Monitoring Systems (VMSs) on all of its catcher vessels.

The Maine DMR strongly urged NMFS not to exempt mid-water trawl gear from Amendment 7 without first determining that this gear cannot be fished to take significant quantities of groundfish. It added that it had enough anecdotal evidence to suggest that skilled skippers with sophisticated net-monitoring technology can fish these nets very close to the bottom. It reiterated that its concern is not that mid-water trawls can be fished very cleanly but that they may have the potential to direct on regulated species.

Response: Amendment 7 does not specifically exempt mid-water trawl gear from the GOM area closures, but allows this gear to be exempted in the future. Even if mid-water trawlers were allowed in the closed areas, they would not be allowed to possess any regulated species, therefore they would have no incentive to direct on regulated species.

6. Comments on Minimum Mesh and Fish Sizes

Comment 15: A commenter stated that minimum fish sizes are responsible for the collapse of the New England stocks of cod, haddock and other species of groundfish. He added that prior to minimum size regulations, quotas and trip limits worked quite well and all that was needed to maintain the stocks was 5½-inch (13.97-cm) square mesh and no minimum sizes.

Response: Many members of the industry and the public favor minimum sizes because allowing fish to grow to a particular size prior to harvest can increase yields and enhance spawning. The need for fishing mortality reductions is paramount, however, and minimum size limits do not necessarily translate into such reductions. Possession limits and quotas were considered during the development of Amendment 7 and were put forth in the public hearing document under Alternative 4. Public response during the hearing phase was opposed to the use of quotas and trip limits.

Comment 16: The Maine DMR stated that Amendment 7 does not address increased mesh and fish sizes, and suggests that these options should be integrated more fully into the plan, including new conservation engineering. It said that NMFS' concern about the lack of selectivity studies for mesh larger than regulation size (6 inches or 15.24 cm) may be somewhat allayed by Canadian studies showing an approximately linear relationship between mesh and fish sizes. It added that it is reasonable to assume that this relationship holds for the slightly larger meshes at issue here (7-inch (17.8-cm) gillnets and 8-inch (20.3-cm) codends).

Another commenter stated that if 7-inch (17.8-cm) square mesh were used exclusively for regulated species, there would be no need for diamond mesh and possibly no need for a minimum fish size, resulting in no discards.

A third commenter stated his concern that the provision pertaining to adjustments of minimum fish size, originally contained in Amendment 5, has never been adopted despite ''reports of high flatfish discard rates in

management areas where use of square mesh is mandatory.''

Response: Increased mesh sizes and increased fish sizes were addressed and discussed as an option in the draft public hearing document but were not adopted by the Council. Amendment 7 continues the established minimum fish sizes, except for some increased fish sizes for recreational and charter/party vessels not fishing under a DAS. Increased mesh and fish sizes can be accomplished under this plan through framework action. The use of mesh size as the sole measure to control fishing mortality is problematic for a variety of reasons. One reason is the wasteful and unlawful practice of using small mesh liners or other devices to circumvent conservation regulations. Another is the likelihood that a net will become clogged during long tows, rendering the mesh increase ineffective. Nevertheless, 7-inch (17.8-cm) mesh would contribute toward conservation and Amendment 7 includes incentives to use larger mesh.

Use of square mesh is required in juvenile protection areas where concentrations of small cod and haddock are usually found. Square mesh is designed to allow round-shaped fish to escape but it is not as effective an escapement mechanism for flatfish. Several research experiments on gear conservation methods (some financed by the Saltonstall-Kennedy Grant program administered by NMFS) are underway to devise a net configuration that will enhance escapement of both juvenile flat and roundfish. Meanwhile, the Council has the option of increasing minimum fish and mesh sizes through framework actions, and may elect to do so in the future.

7. Comments on the TACs

Comment 17: An association stated that TACs should differentiate between hook fisheries and other commercial fisheries, and that one TAC should be established for the longline and jig fishery and another TAC should be established for the other commercial groundfish fisheries.

Response: The public hearing document did consider allocating DAS by gear group. Note that DAS can be considered an extension of quotas, by gear. This alternative was rejected by the Council; however, it may be reconsidered at a later time.

Comment 18: Senator Bob Smith (NH) stated that TAC levels have been set unrealistically low. He and other commenters argued that such low levels provide larger vessels with the opportunity to consume the TAC prior to the small-vessel fleet having an opportunity to use their DAS.

Senators Olympia J. Snowe (ME) and William S. Cohen (ME) stated their concern about equity for smaller vessels and added their concern that Amendment 7 goes too far, too fast.

An association stated that the only way a target TAC could alleviate a ''derby-style'' fishery and give the same opportunity to all size class vessels throughout the year would be to allow fishing to continue after the target is reached. The association asked how this achieves conservation?

A commenter stated that the proposal of allowing extra days for using larger mesh while the majority uses regulated mesh makes no sense when a TAC is in place. He added that the vessels selecting this large mesh alternative in all likelihood will never get to use extra days assigned them.

Another commenter stated that large vessels would have access to three different TACS under Amendment 7 while most of the New Hampshire small-vessel fleet would have access to only the GOM TAC.

Response: TAC levels were established based on the Council's Amendment 7 objective to reduce fishing mortality to $F_{0.1}$, which translated to the established TACs. Additionally, Amendment 7 establishes a target TAC system rather than one with absolute TACs. Should a target TAC be exceeded, the Council will respond by adjusting the management measures in the following fishing year to keep catches below the target. Fishers should understand that should the TACs be reached during the fishing year, the fishery will not necessarily close, but rather, adjustments to the measures will be made for the following fishing year taking into account the impact of the adjustments on different sectors of the industry. ''Target'' TACs rather than an absolute TAC were adopted in part to provide equity and fairness to the different types of participants in the fishery. It allows the Council to take into account impacts of adjustment measures on different sectors of the industry. The Council will adjust the target TAC (upward or downward) as stock size changes are observed and will adjust the management measures as needed to keep catches below the target. This should alleviate a ''derby-style'' fishery and give the same opportunity to all size class vessels throughout the year. Also, the small-vessel fleet is not restricted by Amendment 7 to fishing in any one area but may move vessels to areas where different TACs apply.

Comment 19: An environmental organization stated that the $F^{0.1}$ target and resulting 1996 TAC for GB haddock are too high for the rebuilding needs of the stock and should be reduced. It said that at this fishing rate, the probability of GB haddock reaching the spawning stock threshold within 10 years is calculated to be only 22 percent. It added that the 1,000-lb (454-kg) trip limit for haddock, contained in § 651.27(a) of the proposed rule, is more restrictive because it is not expected to result in landings as high as the specified TAC for this stock. Thus, a discrepancy exists between the 1996 TAC for this stock and the management measures, as well as between the 1996 TAC and the rebuilding goal. It urged NMFS to correct this discrepancy by determining a fishing mortality rate for GB haddock that is likely to achieve the spawning stock threshold within ten years, and then to respecify the 1996 TAC for this stock. It further stated that if this is not done, the 1996 TAC will be used to argue for less restrictive management measures that will not achieve the rebuilding goal of Amendment 7 for this stock. It opined that future TACs will be set too high if the F target for this stock is not reduced.

Another environmental organization opposed the increase in trip limits for haddock from 500 lb (226.8 kg) to 1,000 lb (453.6 kg). It added that the GB haddock fishing mortality target and target TAC are set significantly too high and that a specific (and lower) fishing mortality target and target TAC should be set for GOM haddock. It reasoned that a higher trip limit simply increases the incentive to continue fishing when and where haddock bycatch occurs and at some level creates an incentive to fish specifically to target haddock to catch the trip limit.

The organizations made these specific points:

(a) The $F_{0.1}$ fishing mortality target and the resulting 2,800 mt 1996 target TAC for GB haddock are unacceptably high. Moreover, these targets result in only a 22 percent probability of rebuilding to the 20-percent SSB level within 10 years (NEFMC, 1995, Draft Proposals for Amendment 7 to the Northeast Multispecies Plan, p.12). The answer to the Council's perceived ''problem'' that the haddock trip limit may be too low to allow the fleet to catch the entire GB haddock target TAC is to reduce the GB haddock fishing mortality target and target TAC to much lower levels that would allow at least a 50 percent probability of rebuilding of this stock to the 20 percent SSB levels within a minimum of ten years.

(b) Given the extremely poor condition of the GOM haddock stock, a specific and very low fishing mortality target and initial target TAC should be

set for this stock that allows a similar rebuilding timetable and probability. The 21st SAW Advisory Report on Stock Status concluded that GOM haddock biomass declined to nearly undetectable levels over the last two or three decades (p.28). Under this circumstance, it is inappropriate to manage GOM haddock with other regulated groundfish under an aggregate fishing mortality target of $F_{0.1}$ and a single aggregate target TAC of 25,500 mt in 1996.

Response: These issues were addressed at the April, 1996 meeting of the New England Fishery Management Council by both the Council and the Regional Director. The 1996 TAC for this stock is a maximum, not a quota to be achieved, and NMFS feels that coupled with other haddock conservation measures, the haddock trip limit and TAC are not inconsistent. Under the annual frameworking provision, NMFS and the Council will reconsider whether various measures related to the haddock fishery are sufficient to meet the objectives of Amendment 7.

NMFS is advocating very conservative management strategies for this stock to promote prospects for stock rebuilding, i.e., to restore SSB to certain levels. The haddock trip limit was established as a disincentive to target this species on a trip or tow. NMFS believes that an increase from 500 lb (226.8 kg) to 1,000 lb (453.6 kg) is not effectively an increase, considering that the former measurement by totes has been eliminated. That volumetric measure, in practice, allowed vessels to land more than the 500-lb haddock trip limit because volumetric equivalent measures proved to be too generous. Any additional increase beyond 1,000 lb (453.6 kg) in the haddock trip limit would have to be accompanied by compensatory measures. A trip limit will remain in place unless and until alternative restrictions that achieve the same result are developed and implemented.

Comment 20: An environmental organization stated that the aggregate TAC for the remaining regulated species (other than cod, haddock, and yellowtail flounder) as specified in the proposed rule is set too high to prevent overfishing of at least some of the other regulated species. It said that the aggregate TAC was set ''at levels corresponding to recent fishing mortality rates to ensure that effort is not redirected to these stocks.'' It argued that the report of the 21st SAW indicates that pollock, GB winter flounder, and both stocks of windowpane flounder are currently at or near record low levels of abundance and biomass, while redfish have continued to fail to rebuild. It said that this indicates that recent fishing mortality rates have been too high on at least these four additional species. Therefore, continued fishing at recent rates will fail to prevent overfishing and to allow overfished stocks to rebuild. At a minimum, it argued, the aggregate TAC for the remaining regulated species needs to be recalculated to consider the conservation needs of these other species.

It further questioned the advisability of including overfished species in an aggregate TAC.

Response: NMFS has been and remains concerned about the conservation of each stock for a given species within this species complex but Amendment 7 addresses the species rebuilding needs of CHY and deals with the remaining multispecies as a stock complex, in the aggregate. The national standards require that overfishing definitions have to be addressed for each species of the multispecies complex, so that the Council should reconsider the issue annually. It is possible that additional measures will be required on a species by species basis, after further analyses later (e.g., analysis of data from one or two fishing years after implementation of Amendment 7 begins). The MMC will be charged with the responsibility for addressing this issue and for making appropriate management recommendations to the Council.

Comment 21: An environmental organization stated that the final rule should establish in advance the specific improvements in management programs that would be implemented if target TACs are exceeded by 10 percent or more.

Response: Any specific improvements in management programs to be made if target TACs are exceeded would be tailored to the situation requiring such actions. Because of the combination of factors that would need to be considered, it would be difficult to establish a fixed action in advance. Any future action should be subject to comment from the public at the time it is under consideration.

8. Comments on the DAS Program

Comment 22: An association stated that additional DAS should be offered as an inducement to vessels converting to hook fishing.

Response: Increases for DAS for individual gear types were considered in the public hearing document, but rejected by the Council. The Council and NMFS recognized the possible benefits of hook fishing by allowing for a permit in the new, hook-only limited-access category. The commenter's option was not specifically addressed by the Council but could be considered by the Council as a framework adjustment measure.

Comment 23: In a joint correspondence two associations stated that Amendment 7 incentives that offer additional DAS for use of larger mesh are not equal across gear type. They added that fishing effort restriction must not favor one gear type over another; otherwise anticipated conservation benefits could be negated by gear conversion.

Response: The Council recently clarified that the proposed measure to increase fishing time (DAS) for the Large Mesh Individual DAS option would apply to all vessels using large mesh, whether they are trawl vessels or gillnet vessels. This resubmitted measure of Amendment 7, was described in a notice of proposed rulemaking published in the Federal Register on April 18, 1996 (61 FR 16892), and is designed to promote conservation by providing an equitably applied incentive to use nets constructed of mesh that are larger than the minimum size. NMFS approved the resubmitted measure on behalf of the Secretary on May 17, 1996.

Comment 24: A commenter stated that Amendment 7 does away with the ''layover provision,'' which would have done some good for the resource. He added that it was eliminated to placate the large boat sector. He stated that, without this provision, large boats could engage in back-to-back trips to the detriment of the resource.

Response: Both the layover day provision and the fleet blocks of time out of the fishery have been eliminated under the preferred alternative. Given the 50 percent reduction in DAS allocation, the possibility of back-to-back trips undermining mortality reduction goals does not appear to be significant. The layover day provision would not be effective and would be difficult to enforce under the reduced DAS allocations implemented by this rule and were removed. In addition, removal of this provision is intended to encourage some vessels to move out of groundfishing for significant portions of the year.

Comment 25: A commenter stated that vessels in the Fleet DAS permit category are at a disadvantage when compared with vessels in the individual DAS category, because it gives them less access to the resource and most of them are smaller, more weather dependent boats.

Response: These categories were established by Amendment 5 after a lengthy public hearing process and are not changed by this rule. The principle behind the individual DAS program is to provide those vessels that primarily direct their operations on multispecies a baseline allocation of DAS that reflects actual fishing. All other vessels were allocated a general average of the fleet (Fleet DAS). The Fleet DAS program was established, in part, as a default type allocation for vessels that could not prove their actual DAS, vessels that did not wish to purchase vessel monitoring devices and other vessels that may not have had sufficient DAS in the groundfish fishery. Vessels that could demonstrate that they fished more than the fleet average could apply for an Individual DAS permit. Individual DAS vessels received a higher allocation of DAS because, historically, they fished for DAS more than the average of the fleet. In any event, smaller vessels that traditionally engage in day trips will essentially be allowed twice the number of allocated DAS because their trips will be allocated on an hourly basis. That is, a day trip that lasts only 12 hours will only use up one-half of a DAS.

Comment 26: A commenter stated that the Council acknowledged that the method used to calculate the DAS for the gillnet sector of the fleet was wrong. He stated that the Council assumed it would be corrected by a framework adjustment. He stated that the framework adjustment process was not intended to be used to correct deficiencies recognized prior to implementation. He suggested that Amendment 7 should be disapproved on this basis alone.

Response: One of the disapproved measures of the amendment was the measure that counts gillnet DAS as time when gear is in the water, as referenced by the commenter. NMFS' Office of Law Enforcement also cited difficulties in monitoring gear in the water. Moreover, the Council submitted a comment on the proposed rule stating that it is seeking alternatives to the gillnet DAS structure through framework action. Until such time, the DAS counting method will be the same as that for other DAS categories, i.e., the time spent away from port.

Comment 27: A commenter stated that management's use of DAS as effort reduction raises questions of equity and fairness. In support of his statement, he asked the following questions: (1) Does a vessel's past history of DAS show whether it was away from the dock for 10 or 24 hours? (2) Can a day boat that fished 300 10- or 12-hour days in the years that are being credited with DAS apply those days to the current DAS regulations? (3) Can this vessel now take his allotted DAS and apply them to fishing offshore with 24-hour days? (4) Can a day boat that historically fished 120 12-hour days now be entitled to 278 days in year 1 and 176 days in year 2, if he makes all 12-hour trips? (5) Are these 12-hour day boats benefiting with twice the days as boats that fish full days? (6) Should a gillnet fleet from Cape Cod be penalized because the practice of ''soaking'' nets is not acceptable to the majority of the fishing fleet?

Response: To question (1) Yes, for vessel trips where captains were interviewed by a port agent, the hours away from the dock are recorded, however, other records are usually needed to augment NMFS' data because submission of vessel trip reports was not mandatory and not every trip could be interviewed; (2) yes, if a vessel can show 300 DAS, it can be allocated, as a baseline, that many DAS; (3) yes, used DAS are counted in hourly increments; (4) the vessel would be subject to a 120 DAS baseline with a 10-percent reduction for 1994 and 1995, an additional 15 percent reduction for 1996 and a final reduction of another 15 percent for 1997; (5) DAS used is computed in hours, therefore, any vessel using less than 24 hours in a DAS is on record for that portion of the day used in hours away from the dock; (6) DAS for gillnetters is based on time away from the dock, which should reflect their actual fishing time.

Notwithstanding the possibility that vessels that fish only partial days may be able to fish more ''days'' than their DAS allocation appears to allow, NMFS has determined that the overall effort reduction measures are adequate in achieving mortality reduction goals. If it appears that such measures are not effective they can be adjusted through framework measures.

9. Comments on the Socio-economic Analysis

Comment 28: In a joint correspondence two associations stated that the socio-economic statement for Amendment 7 states that class 3 and 4 vessels will not be financially viable in year 2. They further stated that other fleet sectors will be viable, because the regulations have been skewed to make it so. They added that the Magnuson Act, specifically, National Standard 4, clearly states that all user groups are to be treated equally. They further added that the socio-economic statement was drawn up several weeks prior to the adoption of major segments of Amendment 7 and that its accuracy was questioned on numerous occasions. They stated that the Regional Director had also indicated publicly his concern about it being a solid appraisal of the future.

Response: The requirements of the Magnuson Act require that fisheries regulations do not discriminate against residents of different states and that any allocation of fishing privileges to fishers be fair and equitable to all such fishers, that the allocation be calculated to promote conservation and that no particular entity acquire an excessive share of such privileges. The Council and NMFS considered these factors in developing Amendment 7 and concluded that the measures adopted were the best suited to provide fair and equitable fishing opportunities to all sectors of the fishery. As to the accuracy of the socio-economic impact statement (SIA), there were some changes to specific details of various Amendment 7 regulations after the broad-scale analyses such as the cost-benefit analysis, the sector analysis, and the break-even analysis in the SIA were completed. However, the sector analysis and the break-even analysis in the SIA are not affected by these changes because the analyses are based on broad effort reduction goals, (i.e., 50-percent and 80-percent reductions in fishing effort). The cost-benefit analysis is also based on total levels of effort reduction (independent of how the reductions are achieved) and on projected landings. These broad-based analyses did not change in the final weeks, nor did the general characterizations of the fleet change, such as are found in the ''Human Environment'' Chapter.

If the comment alludes to specific discussions of particular measures, such as some of the comments in the SIA, all changes up to and including those made at the January 25–26, 1996 Council meeting, which included the vote to send Amendment 7 to the Secretary, were analyzed. Analyses to minor changes to measures were encompassed in the broad scale analyses.

Any and all limitations to the data and analyses are discussed in the FSEIS. However, NMFS stands behind the stated quality of the data used and academic rigor of the analyses performed. It is true that the analyses may be insufficient to pinpoint precise impacts, especially for a given individual vessel. The test of the EIS specifically states this. The analyses do, however, give an accurate general picture of the range of likely impacts.

Comment 29: A commenter stated that the only way to rebuild the stocks is to do away with big fleet boats 60 ft and

greater in length, which caused the stock damage in the first place.

Sen. Judd Gregg (NH) added his concern that the amendment inequitably treats the interests of the small-vessel fleet relative to the large-vessel fleet or corporate trawler fleet operating in the GOM. He stated that without appropriate modification, Amendment 7 threatens the economic viability of the New England small-vessel fleet and argued that it has a relatively small interaction with the groundfish population. He further stated that the FMP failed to appropriately focus management measures on the industry segment responsible for pressuring the resource.

Response: The amendment is intended to be constructive in the long term, that is, to rebuild the resource by equitably applying reductions in fishing effort and to allow vessel owners to individually maximize their abilities within a fair set of constraints. Individually, large vessels do tend to have greater fishing power and consequently can exert more fishing pressure on the stocks than do smaller vessels. Smaller vessels in the 31 to 45 ft (9.5 m to 13.7 m) class (approximately 46 percent of all limited access permits) can cumulatively exert a significant amount of fishing effort as well as individual vessels 60 ft and greater in length. Because of the large reductions in effort needed to rebuild severely depleted groundfish stocks, all vessels that are greater than 30 ft (9.1 m) in length, and all other vessels formerly exempted from the DAS effort reduction program (Hook-Gear and Gillnet vessels), are brought under the DAS program. Moreover, given the variability and types of vessels and gear used in this fishery, it would not be possible to design management measures with precisely equal impact on all participants. In approving Amendment 7, NMFS has concluded that the overall conservation benefit of the measures outweigh the hardship on individual vessels.

Comment 30: In a joint correspondence two associations stated that the socio-economic analysis of Amendment 7 regulations does not include any additional monitoring and enforcement costs, yet the document suggests that these are likely to exceed the projected benefits. The analysis must factor in the cost of adding all the previously exempted vessels to the DAS call-in system, the cost of the vessel tracking system (VTS) to boats and to the Government for the monitoring hardware and software, and the United States Coast Guard's (USCG) costs for monitoring and enforcing DAS, closed areas, gear restrictions and trip limits. They added that the Federal Government has committed $25 million to the Fishing Capacity Reduction Program. This is either a pure cost, or the cost-benefit must be analyzed. The loss of revenue from monkfish landings, constrained by management measures to reduce landings of regulated species, is not included. They further stated that market loss due to foreign substitutes, and the recent policy changes in the bid process for military fish supply, are not included and market rebuilding costs are not estimated.

The associations stated their understanding that these costs, and others yet to be anticipated, are difficult to predict and quantify but added that effort must be made to do so, as these costs have the potential of negating any estimated benefits.

Response: The FSEIS submitted by the Council as part of Amendment 7 contains a discussion of other costs (Appendix X, E.7.2.3.8). The FEIS document states that many other costs of the nature referred to by the commenter were not considered because they are only marginally different from the status quo in Amendment 5 or because the information is unavailable, as the commenter concedes. For instance, the marginal cost of adding vessels to the DAS call-in system is expected to be insignificant because the system is in place and can easily be upgraded to receive an increased volume of phone calls, if necessary.

Additional costs associated with installation of VTS systems on individuals vessels were not considered since Amendment 7 does not change which vessel categories would be required to install a VTS. Thus, VTS costs to vessels are not affected by Amendment 7 relative to the staus quo (SQ).

The USCG's estimate of potential costs of Amendment 7 assumes that much of the enforcement effort would be conducted at-sea. Because of the comparatively high-cost of at-sea enforcement, NMFS believes that enforcement efforts will necessarily be land-based. During implementation of Amendment 7, NMFS encourages increases in sea-based support to improve the overall effectiveness of programs implemented under Amendment 5, e.g., DAS compliance, gear restrictions, etc. However, although such costs may occur during Amendment 7, they actually represent programmatic improvements that could also be expected to be made in the out years of the status quo amendment.

Appropriate analyses of the $25 million Fishing Capacity Reduction Program will be conducted once it has been approved.

Losses from landings of associated species as a result of conservation actions directed at the regulated groundfish species are acknowledged in the plan. The benefits derived from foregoing monkfish landings in order to conserve groundfish stocks are deemed positive. There is no way to distinguish whether trips in which monkfish is landed along with regulated groundfish constitute a monkfish trip or a groundfish trip with monkfish bycatch. Fisheries where it is shown that bycatch (in weight) of regulated species is less than 5 percent are permitted to operate under Amendment 7. This is not the case for any monkfish fishery. A Monkfish plan or amendment is under development, and it is generally acknowledged that monkfish stocks are overexploited.

Losses in market as a result of reduced landings under Amendment 7 are recognized. NMFS undertook a study of the impacts of landings reductions under Amendment 5 on intermediate markets (Georgianna, Dirlam and Townsend), results of which were commented on in the FSEIS. The costs of the steeper reduction in landings as a result of the more rapid effort reduction will be higher still. The Council took the qualitative step to modify the reduction schedule from 1 to 2 years with exactly these impacts in mind. This will provide time for diversification into other marine products that would result from shifted effort. Similarly, the Council chose among the alternatives it considered, the effort reduction process (DAS reduction) least disruptive to shore-side activities. Again, the reduction schedules discussed are relevant to groundfish only.

Changes in procurement contracting is nationwide and encourages competition within the United States among fish producers. The intention is to achieve greater value for dollar of procurement. Our analyses suggests that prices to groundfish landings will not be significantly impacted by the removal of a price floor in the early years of the plan. In later years, as occasions of congested landings occur, the removal of this support might lower that day's prices somewhat from what they might have been. However, this procedural change would have been in effect under either Amendment 7 or its default, Amendment 5 as modified.

Comment 31: In a joint correspondence, two associations stated that the DAS reduction objectives are based on the hypothesis that a 50-percent reduction in DAS will achieve

a 50-percent reduction in fishing mortality. They argued that a 50-percent reduction in DAS is more likely to achieve a much higher reduction in mortality as large number of vessels exit the fishery because of insufficient DAS to remain economically viable.

Response: That economic viability will be a problem for the average trawler as the DAS are reduced was acknowledged in the plan and particularly in the break-even analysis, which analysis dealt with groundfish days only. Lack of data on individual vessel costs and effort precluded prediction of the number that would find conditions intolerable. To compensate, a yearly adjustment mechanism was established to attempt to reconcile the DAS reductions with the desired fishing mortality trajectory. Where vessels exit the fishery and do not exercise their DAS allocation, the effect may result in an easing of the reduction schedule for the remaining vessels. This would not occur without a lag of about 1 year. Much of this uneven distribution of impacts might be alleviated by programs which permit transfers of DAS, e.g., through consolidation. These were not included in Amendment 7 but may be considered in the future.

Comment 32: A commenter, on behalf of nine offshore lobster vessels, stated that Amendment 7 should not be implemented until the impacts of redirection of trawler effort on the depletion of the lobster resource and on gear conflicts are adequately addressed. He stated that section E.7.1.1.2, Impact on other fisheries, on p. 204 of the FSEIS is totally inadequate and ignores substantial Council comment and deliberation on the issue of impact on other fisheries, and also ignores the experienced re-directed effort that is evident from Amendment 5 and from similar restrictions on fishing days in the sea scallop FMP.

The commentor also stated that it is completely disingenuous for the EIS to say that ''there is no practical way to predict where the effort from groundfishing will go and what the impact of the proposed action on other fisheries will be.'' He argued that NMFS has a great deal of data on the trends in fishing effort, the productivity of various fisheries, and the impacts evident from the trends in shifting fishing effort. He cites as sources NMFS information on the value of fishing gear lost to conflicts with trawlers over the past few years, the analysis of the shift in effort to the monkfish fishery, the Fishing Industry Grant program and USCG data.

An attorney representing a group of offshore lobstermen mirrored the above concerns and added that the Council stated, in support of the emergency action for gear conflict in southern New England, that the gear conflicts were related to additional regulations on the groundfish industry which forced vessels to fish in areas for nontraditional species. Another commentor finds it inconsistent that the Council can make this statement in support of an emergency action request and then, in support of Amendment 7, state that the impact cannot be quantified.

Response: As stated in the analysis of impacts on other fisheries, the degree to which trawlers may redirect fishing effort onto the lobster resource cannot be estimated at this time. NMFS believes that such redirection would be mitigated by the exemption program in the GB/GOM area, which requires all fisheries outside of the DAS program to meet the 5-percent bycatch limitation for regulated species.

Comment 33: A commenter stated that a NOAA study of critical socio-cultural issues is presently underway for the New England fishing industry. The commenter added that the final report from this study of the Northeast fishery is due by June 15, 1996, and that such analysis of the fishery is required by the Magnuson Act and no plan amendment should be implemented prior to this report.

Response: The report mentioned by the commenter contains baseline information about the fishing industry that could be used for future framework actions or FMP amendments. It was not ready in time for the Council to consider for Amendment 7. Amendment 7 included analyses based on the best information available to date.

Comment 34: An association stated that under E.O. 12866 the Agency must submit to the Office of Information and Regulatory Affairs (OIRA), with respect to any significant action, the text of proposed regulatory action, an assessment of the costs and benefits of the action, an assessment of alternatives, and an analysis as to the reasons for selecting the preferred alternative (PA). It added that the Agency must provide the public the information provided to OIRA, and the changes between the draft submitted to OIRA and the subsequent action. It stated that it is not clear what documents were submitted to OIRA and what analysis was reviewed.

Response: NMFS complied with the requirements of E.O. 12866. All public hearing documents, as well as the scientific, economic, and social impact analyses, and comments to public comments on the DSEIS, were provided to OIRA along with a copy of the proposed rule and its preamble. No changes were made to the proposed rule at the suggestion or recommendation of OIRA.

Comment 35: An association stated that NMFS failed to consider a wide range of costs associated with the PA.

Response: The economic analysis considered all relevant currently available data. The availability of information on the full range of economic activities associated with commercial fishing is quite limited. Economic data on many shoreside activities such as offloading, processing, and sales of inputs to commercial fishing vessels is simply not available. Given this lack of data many of the referenced economic factors could not be incorporated into the economic analysis. However, had these factors been included, it is not a foregone conclusion that they would be economic costs. The benefit-cost analysis must consider benefits to the Nation as a whole. This has two ramifications. First, losses in one region may be offset by gains in others, leaving National income unchanged. This might be the case if vessels and/or crew were to leave the Northeast and move to other regions. Second, in over-capitalized fisheries, reductions in resources that are devoted to fishing may be viewed as a net gain from a National perspective. Given the lack of adequate economic data, it was not possible to determine the extent to which economic dislocations such as crew share losses, impacts on suppliers and processors, or the impacts of bankruptcies might be considered transfer payments, national economic gains, or net losses in National income.

Comment 36: An association stated that all the biological and economic estimates for analyses contained in Amendment 7 occurred outside the public's view. It said that it is impossible for experts to replicate any of the sets of projections set forth in the supporting analysis.

Response: All of the recruitment simulator results that included landings streams were described at several Plan Development Team meetings at the Council offices and subsequently at Council Groundfish Oversight Committee meetings. Both types of meetings are attended by the public. In addition, the public hearing document and an extensive draft EIS document were made available to the public months ahead of the Council vote to adopt Amendment 7. An explicit description of the economic information used in the final EIS was contained in the latter.

Comment 37: An organization stated that the IRFA of the impacts of Amendment 7 should contain a description of any significant alternatives to the proposed rule that accomplish the stated objective and that minimizes any significant economic impacts of the proposed rule on small business. The organization further stated that the final regulatory flexibility analysis (FRFA) should provide a summary of issues raised by the public in response to the initial analysis, along with a description of each significant alternative to the rule consistent with the objective of minimizing economic impact, and a statement of why any alternative was rejected.

An association stated that under the Regulatory Flexibility Act (RFA), an agency must assess the impact of new regulations on small business. It said that the NMFS has failed to comply with its obligations. It argued that the Small Business Administration (SBA) had been largely omitted from the process. The intent of the statute is to limit regulatory actions having a significant impact on small business. It argued that this particular preferred alternative (PA) is specifically designed in such a way that trawl vessels will not be allocated sufficient DAS to break even during year 2. This extremely harsh anticipated result flies in the face of the statutory intent of the RFA.

Response: Amendment 7 contains an IRFA that incorporates supporting analyses and portions of the amendment that provide the public with information on the effects on small entities of the PA and any other alternatives considered by the Council, including those that minimize the impacts on small entities. The classification section of the proposed rule for Amendment 7 also contains a statement regarding the probable effects of the PA on small entities and an initial determination under the RFA.

NMFS transmitted a copy of the Amendment 7 and its initial determination that the amendment would have a significant economic impact on a substantial number of small entities to the SBA shortly after NMFS' receipt of the amendment, following standard procedure for all new FMPs and FMP amendments under Secretarial review.

The preamble to this final rule contains a summary of the comments received by NMFS in response to the notices of proposed rulemaking, including comments on the IRFA, NMFS' responses to those comments, and any changes made to the rule as a result of those comments. The IFRA as submitted by the Council, together with the summary of the comments received and NMFS' responses thereto, in this preamble, constitutes the FRFA. Alternative actions were not taken in response to comments on the IRFA. NMFS believes that the responses in this preamble to the public comments adequately explain why NMFS did not adopt alternatives having less of a significant economic impact on small entities compared to those measures in Amendment 7 that NMFS approved.

NMFS disagrees that the final rule violates the intent of the RFA. The intent of the RFA is not to limit regulations having adverse economic impacts on small entities, rather the intent is to have the agency focus special attention on the impacts its proposed actions would have on small entities, to disclose to the public which alternatives it considered to lessen adverse impacts, to require the agency to consider public comments on impacts and alternatives, and to require the agency to state its reasons for not adopting an alternative having less of an adverse impact on small entities.

The Council and Center performed ''break-even'' analyses, apart from the benefit-cost analysis, specifically to assess the financial viability of small business fishing vessels. Where a quantitative assessment was not possible, qualitative comments noting sectoral impacts were offered.

The differential impact of Amendment 7 on trawlers was noted. The cost-benefit analysis is designed to analyze net national benefits of the action affecting many gears and component fisheries. A single sector analysis is inappropriate. NMFS agrees that trawlers will be more heavily impacted than hook vessels and possibly gillnetters (though this latter is unclear since final gillnet framework measures have not been established).

Without better cost-earnings, labor response and alternative employment options data, NMFS is limited in the precision of vessel and fleet level economic/financial impact assessments it can make for such gear-based allocations. Further, additional data on family structure and community social structure would be required for a stronger, more comprehensive social impact assessment of such measures.

Comment 38: An association stated that the NMFS is required, under E.O. 12866, to seek the involvement of those who are intended to benefit and those who are intended to be burdened by any regulation. It added that the Agency must also use consensual mechanisms for developing regulations, including negotiated rulemaking.

Response: The Council process by its nature involves representatives of groups that benefit and are burdened by the management process, either directly as members of the Council, or indirectly as persons with access to the public process at the Council, oversight committee and plan team meeting level. Negotiated Rulemaking is not required.

Comment 39: An association stated that the RIR understates the impact on the trawl vessels and fails to highlight the speculative nature of the benefits of the preferred alternative (PA) in years 9 and 10.

Response: NMFS disagrees. The RIR adequately covers economic impacts. Estimates of economic benefits in years 9 and 10 are seldom as precise in this kind of analysis as are the estimated benefits and costs in earlier years.

Comment 40: An association stated that the PA (Amendment 7) will result in the insolvency of an entire sector of the fishing industry in the Northeast. It commented that the Agency has selected the alternative that causes that result even though the benefits of that plan over the status quo (SQ) (Amendment 5) are questionable and even though the SQ would achieve the same results with respect to stock replenishment over a slightly longer period of time while preserving all segments of the fleet.

Response: The statement does not accurately portray the key difference in objectives for Amendment 5 and Amendment 7. The stock rebuilding objective for Amendment 5 is to reduce fishing mortality on CHY to halt the decline in spawning stock biomass. Rebuilding of spawning potential under Amendment 5 is limited to levels that would reduce the risk of recruitment failure, but would still leave the fishery in an overfished state. By contrast, the objective of Amendment 7 is to rebuild SSB to levels that would exceed minimum threshold levels for the three key species. The differences between the stock replenishment scenarios of Amendments 5 and 7 are clearly illustrated on pages 195–199 of Amendment 7. In every instance, Amendment 7 results in substantially greater levels of SSB as compared to Amendment 5. Thus, the contention that Amendments 5 and 7 result in the same level of stock replenishment cannot be supported.

Comment 41: An association attached a study entitled ''Evaluation of the Economic Impacts of the Proposed Action (Section E.7.2).'' The study, by Dr. Andrew Plantinga and Dr. James Wilson from the University of Maine, acknowledged that NMFS' methodological approach to its socio-economic

analysis is well-accepted within the field of economics and is applied in an appropriate manner. It stated that some of the specific assumptions employed in NMFS' analysis, however, are unconventional and highly questionable. The purpose of the study is to reconsider the economic impacts of the proposed action under a more plausible set of assumptions.

Response: (1) Issue—*Treatment of Imports.* Holding imports constant is standard practice in economic analysis of fisheries management, and reflects uncertainty over how trading partners will manage their resources within the ten-year time horizon. Holding price constant ignores dramatic increases in groundfish prices over the next two decades. Finally, the constant price analysis offered by the commentors still demonstrates a superior result for Amendment 7 compared to Amendment 5, in fact, even more so than for an assumption of constant imports.

(2) Issue—*Treatment of crew costs.* Since labor employed in a fishery is a resource that would otherwise be employed in another activity, it has a resource cost. Given the lack of data on the opportunity cost of this labor, the entire value of crew share is used in some analyses as an economic benefit. However, this approach is inappropriate in overcapitalized fisheries, which is the case for this fishery.

(3) Issue—*Time horizon.* A 10-year horizon is standard practice in bio-economic analyses of northeast fisheries, reflecting the time period necessary for stock recovery. Uncertainty is addressed through the simulation model, which is a more rigorous approach than arbitrarily dropping two years from the analysis.

A more detailed discussion in terms of a response to this comment is available upon request from the Regional Director.

10. Comments Related to National Standards

Comment 42: An association commented that Amendment 7 is inconsistent with National Standard 1 which requires the NMFS to prevent overfishing while achieving an optimum yield from each fishery. It added that the varying mesh requirements from fishery to fishery fly in the face of National Standard 1. Moreover, NMFS' failure to consider the unique factors of different segments of the fleet and different fisheries conflicts with the goals of National Standard 1.

Response: NMFS has determined that the provisions of Amendment 7 not disapproved are consistent with National Standard 1. Allowing different meshes for several small fisheries in the overall groundfishery reflects the effort to incorporate unique factors of each of these fisheries. Mesh regulations reflect area, gear and species concerns. Small mesh fisheries are allowed to operate once bycatch effects have been considered. A single mesh applied to all fisheries would constrain more opportunities. Benefits to other fisheries are foregone in the closed areas included in the plan.

Comment 43: An association stated that National Standard 4 prohibits discrimination among the residents of states. It added that the regulated species constitute a much lower percentage of overall groundfish landings in Maine than in any other of the states impacted by the PA. Moreover, the GOM cod stocks have been determined to be healthier than GB stocks. NMFS' failure to account for differences in local factors results in an exaggerated detriment to the commercial fishermen in a region where the problem is less pronounced. The association added that this failure also violates National Standard 6, which requires NMFS to consider variations in fisheries, resources and catches.

In a joint correspondence, two other associations stated that regulations designed to rebuild stocks of CHY will exact a higher economic burden for Maine than for other New England states. They stated that Maine's industry supports 22,000 fishing and fishing-dependent jobs. They added that Maine is a rural state with few alternative employment opportunities. The associations said that the percentage of CHY in the overall groundfish landings of Maine vessels is much less than that of other New England states. However, Amendment 7 fishing restrictions will greatly constrain landings of other regulated species, which comprise the largest percentage of Maine's overall groundfish landings. They stated that GOM stocks were determined to be healthier than GB stocks, yet all fishing vessels, regardless of fishing region, must take the same direct effort reductions as measured by DAS.

Response: NMFS recognizes that ports in some states may be affected differently than ports in other states. However, National Standard 4 states that management measures shall not discriminate between residents of different states. None of the measures discriminates between residents since all are treated similarly, and thus the amendment is consistent with National Standard 4. The amendment is also consistent with National Standard 6, because the Council and NMFS have considered variations in fisheries resources and catches in attempting to recognize all sectors of the industry through numerous exemptions and special provisions.

The white hake fishery is of increasing importance to many vessels in the GOM. A white hake provision in the amendment allows the Regional Director, upon consideration of the exempted bycatch criteria, to allow a directed fishery on white hake outside of the DAS program.

Comment 44: An association stated that National Standard 5 requires NMFS to promote efficiency and National Standard 7 requires NMFS to minimize costs and avoid unnecessary duplication. It asserted that NMFS has failed to consider less drastic steps, that could be taken to achieve the same result. It argued that regulations should include procedures to relax restrictions quickly. It said that the amendment's analysis also fails to consider heightened enforcement costs.

Response: Amendment 7 is consistent with both of these national standards. The Council and NMFS considered alternatives and included special provisions designed to minimize to some degree the impact of management measures. NMFS notes it is consistent with both standards to take actions only ''where practicable.'' Both harvesting and enforcement costs were less for the DAS reduction program alternative than for several other alternatives under discussion. For the most part the systems necessary were adopted under Amendment 5. Other alternatives included strict quotas with the likely result of fishing derbies, an extensive closed area grid requiring enforcement features far beyond the capability of the region's USCG, and complete closure of all fisheries taking groundfish.

The rebuilding trajectory was modified from a single year reduction in fishing effort, to 50 percent of recent levels, to a two-year reduction schedule. In addition, an annual review process will examine the deviation of the actual from desired rebuilding trajectories. Adjustments (increases or decrease in fishing effort) in DAS or other management measures will occur as they become necessary, upon annual review of the target TACs and actual fisheries data for a given year.

Comment 45: An association stated that Amendment 7 violates National Standards 2, 4, 5, and 6 because: It uses poor, untimely and incomplete information; it is not fair and equitable to all fisheries; it is not reasonably calculated to promote conservation, but rather downsizes fishing fleets as they once were; it unfairly puts concerns of one fishery over another; it discards in

favor of expediency and it does not account or allow for variations of the fisheries.

Response: NMFS disagrees. As discussed above, the provisions of Amendment 7 that were not disapproved comply with the national standards and other applicable laws discussed in response to other comments. As discussed above, NMFS has determined that the measures are based on the best available scientific information (National Standard 2), do not discriminate between residents of different states (National Standard 4), and are fair and equitable and reasonably calculated to promote conservation. NMFS notes that National Standard 5 requires fishery management plans to promote efficiency in utilization of resources ''where practicable,'' as discussed elsewhere in response to comments; in a fishery as severely overfished as Northeast multispecies the ''where practicable'' caveat is a constraining factor. NMFS has approved measures that include several exemption programs and management measures tailored to account for contingencies (geographic, seasonal) as specified in National Standard 6.

11. Comments on the Procedural Aspects of Amendment 7

Comment 46: In a joint correspondence, two associations stated that it is the responsibility of the regional fishery management councils to see that the intent of the Magnuson Act is carried out so all parties concerned are treated fairly and equally, that public input be allowed and comments be seriously considered in making major decisions. The associations added that such has not been the case in the development of Amendment 7 by the Council.

Response: The industry has been actively involved in the plan process, and their viewpoints were solicited and taken quite seriously. In addition to its regularly scheduled meetings, the Council held a large number of committee meetings during the development of the alternatives proposed in the public hearings. Notice of these meetings was sent to everyone who indicated an interest in receiving such notice. Furthermore, these meetings, as well as public hearings, were open to the public and provided an opportunity for representatives from all the different sectors of the fishery to be heard. As the Council developed Amendment 7, the severity of measures under consideration was widely publicized in trade and general publications. The Regional Director personally met repeatedly with fishing industry groups, including those associations whose comment this responds to, both during Council meetings and in their home ports. Furthermore, most of the proposals made in the associations' position paper of September 19, 1995, were incorporated in some form in Amendment 7. These include the removal of layover day provisions, the elimination of exemptions for vessels under 45 ft (13.7 m), and the closure of areas to maximize recruitment, as well as the continued use of DAS as a primary management tool.

Comment 47: In a joint correspondence, two associations stated that the fisheries management process failed its Magnuson Act obligation to involve the Groundfish Industry Advisory Committee in the development of Amendment 7.

Response: Members of the Groundfish Industry Advisory Committee were notified of each scheduled Groundfish Committee meeting and were well represented and actively participated at most of them. Furthermore, from representative membership on the Council, through the scoping process and both formal and informal opportunities to be heard, industry representatives were involved in the development of Amendment 7 from its inception through implementation.

Comment 48: A commenter stated that none of the alternatives to Amendment 7 presented by New Hampshire fishers at public hearings (such as mobile gear night closures and gillnet restrictions) was considered by the Council.

Response: In fact, such issues were considered by the Council. The Council is continuing its consideration of additional gillnet restrictions for implementation by the Amendment 7 framework adjustment process. The Council continues to receive testimony regarding night closures for mobile gear, but has not developed a proposal to implement this measure.

Comment 49: An environmental association urged NMFS to waive the Administrative Procedure Act's (APA's) 30-day delay in effective date and implement Amendment 7's conservation measures immediately upon publication of the rule.

Response: The APA allows the 30-day delay in effective date requirement to be waived if there is good cause to do so. While the commenter seeks such a waiver in order to provide immediate conservation benefits, NMFS believes that it would not be reasonable to require compliance with management measures of this complexity on an immediate basis. The 30-day delay in effectiveness will provide NMFS an opportunity to inform the public about the new requirements. It will also provide the industry with the time required to make the necessary adjustments to fishing activities and gear.

12. Comments on Enforcement of the Amendment

Comment 50: The Council submitted comments addressing enforceability issues associated with the proposed regulations. Their comments are as follows:

They noted that there was an error in § 651.22(g) with respect to the requirement to take 20 days out of the multispecies fishery during the spawning season. Their suggested revision is incorporated.

They identified a mesh size measuring procedure to be used for gillnets and suggested that implementation of this procedure be delayed until October 1996. These recommendations were adopted.

They requested a revision of the definition for ''Port'' to clarify when a vessel must call under the call-in requirements. This change is incorporated.

NMFS notes that it has made some changes in the final rule in response to concerns raised by the Council (see changes from the proposed to final rule).

13. Miscellaneous Comments

Comment 51: The Maine DMR stated, as regards NMFS concerns expressed in the preamble to the proposed rule about the availability of open-access handgear-only permits to party/charter vessels and the resulting administrative and monitoring burden about what set of rules party/charter boats are operating under, that this burden could be reduced by requiring that such vessels only call in upon embarking on a commercial groundfish trip. At other times, party/charter vessels would be presumed to be fishing under recreational rules.

Response: The Council commented that the call-in requirement for charter/party vessels would not enhance enforcement and should be disapproved. NMFS agrees and the measure has been disapproved.

Comment 52: An environmental organization stated that the phrase, ''FMP goals and objectives,'' is used in some places in § 651.40(a) while in other places the phrase, ''FMP objective,'' is used. It believes that the former phrase should be used throughout the section both because it reflects the Council's intention and because it is important to assure that

future management decisions will be guided by the need to reach specified spawning stock thresholds as well as by the fishing mortality rates that the Council hopes will achieve those thresholds.

Response: NMFS agrees and the commenter's suggestion has been adopted.

Comment 53: The Maine DMR stated that DAS program results in compensations by fishermen to maintain their revenues in the face of reduced fishing time for regulated species. In addition to subtle increases in fishing power, this also results in displacement of effort onto other species and into other regions.

It added that large mobile gear vessels that had fished long trips on offshore grounds are shifting their effort to nearshore and inshore grounds to maximize landings from fewer DAS. This not only concentrates effort in areas known to be important spawning and juvenile habitat but is responsible for a sharp escalation in mobile/fixed gear conflicts as draggers and gillnetters compete for the same grounds.

Response: The habitat question raised is responded to in Section 13, ''Comments on Protection of Habitat.'' The Council is aware of the gear conflict issue raised and is presently discussing resolution of the problem. Any such resolution may be effected through the framework adjustment process.

Comment 54: Two environmental associations opposed the proposed exemption that could allow a directed fishery for a regulated species (white hake) outside of DAS restrictions. They stated that NMFS classifies the white hake stock as fully-exploited and at a medium biomass level. They recommended that increased fishing effort on white hake should be discouraged, not promoted.

The Maine DMR added that the white hake exemption should only be implemented if management is confident that this stock is under-exploited and sufficient sea-sampling data is available to determine that this fishery can meet the 5 percent rule throughout the fishing year.

Response: NMFS recognizes that this species is fully exploited. The measure would allow the Regional Director to exempt such a fishery in consultation with the Council, which may be an option if recruitment and biomass remain stable. Any such exemption cannot be granted if it jeopardizes FMP goals and objectives, including not allowing overfishing on white hake. Another commenter stated that any new participants to the dogfish trawl fishery implemented by Amendment 7 should be monitored to assure conformity with the present gear.

The commenter cautioned that any deviation from the gear used could negatively alter the fishery and increase the regulated species bycatch. He suggested that a level of sea sampling be mandated so that the fishery does not proceed unmonitored to assure that those who developed this fishery do not see its conservation benefit compromised.

Comment 55: An environmental organization added that it supports the dogfish trawl fishery on Nantucket Shoals as long as skate bycatch restrictions are maintained and as long as periodic review indicates that: (1) Bycatch rates do not escalate, and (2) appropriate contributions to overall fishing mortality for multispecies targets due to this fishery are recognized.

Response: NMFS will monitor the dogfish trawl fishery through sea sampling, as possible. No skate bycatch is allowed. Should the situation warrant, the Regional Director has discretion to cancel the exemption for the fishery.

Comment 56: The Maine DMR stated that it favored inclusion of two state representatives and an industry member on the Multispecies Monitoring Committee.

An environmental association recommended that membership on the technically based MMC proposed by Amendment 7 (61 FR 8546, March 5, 1996) include an environmental representative and meet for purposes in addition to the annual review (61 FR 8559, March 5, 1996). It added that the MMC should meet when appropriate, including whenever data suggests that target TACs for any population are or may be likely to be overrun by more than 10 percent during any fishing year.

Response: The MMC is formed by the Council. NMFS will forward the suggestions of these commenters to the Council.

Comment 58: A commenter stated that the Council's mandate, as defined by the Magnuson Act, is to take immediate action to conserve and manage the fishery resources. He added that while Amendment 7 purports to be a conservation measure, it is rather a measure that redirects fishing effort. He explained that it addresses the groundfish problem in a manner that ignores the fishery as a whole. He said that Amendment 7 will, in meeting its objective, create and prolong existing problems in the remaining fisheries. Specifically:

1. DAS that place passive (i.e., fixed) gear in the same category of effort with mobile draggers and scallopers grossly discriminates against the passive gear fisherman. For example, an average gillnet fisherman with 120 nets in the water will utilize 6 nautical miles (nm) of bottom and occupy 0.41 acre. A dragger towing at 5.5 nm per hour will drag over 132 miles in 24 hours of towing and with a net sweep of 205 ft will drag over 3,864 acres. Therefore, if DAS are used to manage the multispecies fishery, then DAS should be separate for passive and mobile gear, and DAS for passive gear should be greater than that assigned to the mobile gear sector.

2. The proposed bycatch of lobster (in the mobile gear sector) should be eliminated. The lobster fishery must reduce lobster landings by 20 percent over 5 years. A 200 count lobster bycatch allowance leaves the door open for high grading and for non-reported landings. The value of 200 lobsters will result in a directed fishery by those vessels fishing outside of any DAS restrictions for non-regulated species. (The monetary value of the lobster is greater than the monetary value of their directed catch.) Finally, the lobster can be returned unharmed to the sea, which eliminates the wasteful discard argument.

3. Dealers should report their purchases from all fishermen in a manner that allows a cross check on the mandated vessel reporting systems.

Response: (1) Fishing mortality is not a function of the amount of area covered by the catch per unit of effort—a rough equivalent is a DAS. In theory, if each vessel gives up a DAS, each vessel experiences a 1/365th reduction in effort. As discussed in response to other comments, NMFS has disapproved the proposed measure for counting gillnet DAS in an effort to put that gear sector on the same basis as other gear sectors. Also, the Council is continuing to explore other alternatives for the gillnet sector.

(2) The lobster bycatch allowance is not established as a means to conserve lobsters, but rather to reflect a legitimate bycatch in a fishery that may target for multispecies. If further lobster conservation measures are needed, they would more appropriately be addressed in management measures designed to protect that species.

(3) NMFS has implemented a vessel reporting system that can be cross-checked to the dealer reporting system.

Comment 59: The Maine DMR commented favorably on Amendment 7's exemption for fisheries certified by the Regional Director as having less than a 5 percent bycatch of regulated species. It noted with concern, however, that the procedures for identifying candidate

fisheries for exemption and the methodologies for establishing certification are not yet specified or in place. It urged the Regional Director to develop and set forth the requirements for application and certification as a matter of high priority.

Response: Application procedures are in place and this rule establishes exemption procedures for the newly impacted large mesh fishery. Applicant must submit a written request to the Regional Director. The request must at least describe the area in which the fishery would operate, the period in which it would operate, the gear it would use, the approximate number of vessels likely to participate, and the species it would target, retain and land. Any evidence of the likelihood of such a fishery succeeding should be included with the request. The request will be reviewed by the Regional Director and a letter sent to the requestor explaining the process, which follows. The request will be analyzed to determine whether such a fishery would meet the 5 percent regulated species bycatch standard which, under Amendment 7, has been revised to reflect the Council's intent that it is an absolute maximum (other restrictions on fishing gear and/or seasons may also be considered to reduce bycatch). The completed analysis will be forwarded, along with the request, to the Council, which will place the request for a large mesh exemption on the agenda of the next scheduled Council meeting.

Comment 60: A commenter stated his concern that the majority of the small vessels fishing off of Cape Cod fish primarily in the same area that is designated for the small mesh dogfish fishery. He said that these small vessels fish exclusively for codfish and 80 percent of the fishing occurs from June through October. He stated that the small mesh used combined with less than 100 percent observer coverage raises the potential for large cod bycatches. The commenter recommends that regulated mesh or larger be required. He added that permitting a small mesh size in the dogfish fishery simply because the dogfish are difficult to remove from the net and does not justify the potential harm to stocks of CHY. He concluded that allowing vessels to use small mesh to target dogfish in the area can only lead to high discarding of regulated species as well as juvenile dogfish.

Response: The Nantucket Shoals experimental dogfish fishery was monitored by the Massachusetts Division of Marine Fisheries for two seasons. During the first year of the program, 17 trips were observed and bycatch of regulated multispecies was less than one-half of 1 percent. This program can be terminated if the Regional Director determines that bycatch of regulated species is excessive.

Comment 61: An association commented that Amendment 7 data confirms that commercial hook fishing is labor intensive. It stated that based on Council data, small longline boats catch only 300 lb (136.1 kg)/man/day as compared to large draggers, which catch 880 lb/man/day. Amendment 7, Vol. I, Table E.6.4.1.1.4 b & e. The commenter added that commercial hook fishing should thus be encouraged to reduce employment losses.

An association commented that restoring habitat already destroyed by draggers would be another means of overcoming Amendment 7's employment dislocation with an eye toward rebuilding stocks in the future. The commenter suggested that displaced draggermen could be temporarily employed building artificial reefs ashore and towing them out to GB and the Great South Channel to enhance stock recovery. It concluded that even buy-back vessels could be sunk offshore to provide groundfish gardens.

Response: NMFS is not opposed to any organization encouraging hook fishing. For NMFS' position on habitat protection, see Section 14, ''Comments on Protection of Habitat.''

Comment 62: The Connecticut DEP commented that it shares NMFS' concern about the condition of the winter flounder resource (as stated in the preamble to the proposed rule) but does not agree that eliminating the winter flounder possession limit in the Mid-Atlantic (MA) Regulated Mesh Area (RMA) will measurably improve the stock. The commenter cited the 21st SAW report, which states that only about 18 percent of the SNE and MA area winter flounder landings are from fisheries in the MA RMA. He added that, ''(w)hatever increased management effort the Atlantic States Marine Fisheries Commission (ASMFC) and the Council adopt in response to the SAW advice will be more critical to successful flounder rebuilding than whether or not the 10 percent/200 lb (90.7 kg) exemption exists during the 1996 fishing season.''

Response: NMFS' concern about the winter flounder resource is not unfounded. Winter flounder are currently overexploited, at low biomass levels, and in need of fishing mortality that is reduced to as low a level as possible. As the winter flounder stock begins to rebuild, the Council may want to reconsider the MA RMA exemption at a later time.

Comment 63: In response to NMFS' reservations expressed in the preamble to the proposed rule, the Connecticut DEP commented that likely changes in winter flounder management during 1996 will make more of a difference than the availability of state waters winter flounder exemption programs. It stated that the value of the program is that it allows a state to choose not to participate or withdraw. It said that participating states have been in compliance with the ASMFC plan but expects that, by summer, most states will (by review and revision of the plan) be out of compliance because the current SAW advice indicates a more pessimistic condition of the stock than did the previous SAW. The DEP raised the issue of whether disapproval of this exemption program outweighs the problems that may arise of a jurisdictional nature. It suggested that the program is better off preserved and opportunity should be provided through ASMFC and the Council to develop a more aggressive winter flounder conservation program, which also preserves the states' right to manage fisheries within their jurisdiction in accordance with approved plans.

The Connecticut DEP further commented that both Connecticut and New York question the rationale of new § 651.20(j)(7), the 500-lb (226.8-kg) possession limit when fishing in the State Waters Exemption Program (SWP) and not fishing under the DAS program. It explained that under Amendment 5, vessels enrolled in the SWP and not fishing under DAS could retain 500 lb (226.8 kg) of winter flounder, consistent with the exclusive economic zone (EEZ) fishermen not fishing under their DAS. Under Amendment 7, however, the possession limit of regulated species for EEZ fishermen when not under DAS is zero. The commenter stated that Connecticut and New York believe that fishermen under the SWP should be using their DAS when in possession of winter flounder, that when in the SWP and not on DAS, that possession of winter flounder should be prohibited. The Connecticut DEP argued that there is no indication that the Council intended to allow 500 lb (226.8 kg) of winter flounder in the SWP when not fishing under DAS, while prohibiting EEZ fishermen from any possession of winter flounder when not fishing under DAS.

Response: NMFS has not disapproved the State Waters Winter Flounder exemption program. NMFS believes the Council intended to allow the 500-lb (226.6-kg) limit when it voted to keep

current exemption programs in place. The 500-lb (226.8-kg) allowance was established by Amendment 5.

Comment 64: The Connecticut DEP commented that the proposal to move the boundary of the MA area may create an enforcement problem in Block Island Sound. It stated that there is no longer a territorial sea within 3 miles north and west of Montauk, due to a supreme court decision in the 1980's that had the effect of changing New York's ''baseline'' and consequently, the location of the New York territorial sea. It suggested that the matter could be resolved by revising the location of the line as follows:

Section 651.20(d) *Mid-Atlantic regulated mesh area.*

(1) *Area definition.* The Mid-Atlantic regulated mesh area is that area bounded on the east by a line running from the Rhode Island shoreline at Watch Hill, RI southwesterly through Fishers Island, NY, to Orient Point, NY, and from Orient Point southeasterly to the intersection of the 3-nautical mile line east of Montauk Point, southwesterly along the 3-nautical mile line to the intersection of 72°30′ W. Long. and south along that line to the intersection of the outer boundary of the EEZ.

In support of the above, the commenter stated that the problem with the northern terminus of the line in the proposed rule is that it would bisect the shoreline along the Rhode Island south shore, an area in which Connecticut, Rhode Island, and New York vessels commonly trawl. It said that it is inadvisable to have a mesh separation line fall in the middle of an area commonly trawled, for enforcement reasons. The commenter stated that its suggested revision resolves the original problem of splitting Long Island Sound into two mesh management areas (the original 72°30′ line) and avoids splitting Block Island Sound into two mesh management areas. The Connecticut DEP added that its proposal has been confirmed to be acceptable to Rhode Island, New York, and the USCG.

Response: NMFS has adopted the Connecticut DEP's suggested revision as requested by the States of Connecticut, Rhode Island and New York, and by the Council.

Comment 65: An association commented that the elimination of a proposed 100-lb (45.4-kg) groundfish allowance for lobster trap fishermen is unnecessary. It added that this would prohibit a lobster fisherman from bringing home a legal size codfish for dinner. It further noted that if a lobster fisherman has a multispecies permit and his vessel is more than 30 ft (9.1 m) long, he may not qualify for a DAS allowance, and would still be unable to land a (legal size) codfish.

The association added that the proposed rule says that no groundfish may be taken without a groundfish permit and while no more permits will be issued, those vessels with permits that are over 30 ft (9.1 m) (many of the association's lobster vessels are in the 31- to 42-ft range (9.5 m to 12.8 m)) must prove groundfish landings of at least 500 lb (226.8 kg) to renew their permits. The association expressed concern that these vessels would actually lose their permits. The association stated that some allowance should be permitted if only for personal use. Further, no restrictions are in place to keep groundfish fishermen from taking lobster.

The association suggested that some small incidental groundfish catch be allowed for all lobstermen with a groundfish permit or that an incidental bag limit permit be established to accommodate these circumstances.

Response: This issue was raised and considered by the Council. The Council decided to disallow a regulated species bycatch in the lobster fishery, because the TACs are set so low and Amendment 7 focuses on eliminating regulated species bycatch in fisheries capable of taking a bycatch of regulated species.

Comment 66: An association commented that it presumes that restrictions on possession of groundfish by lobstermen do not include possession of ''groundfish racks'' that were purchased for use as bait. It suggests that some wording be inserted into Amendment 7 to recognize ''groundfish racks'' as legal bait possessed by lobster vessels.

Response: The Northeast Multispecies regulations apply to fish and fish parts, and as such, ''groundfish racks'' must meet the minimum size established by the multispecies regulations. Furthermore, a Northeast Multispecies permit is required to possess ''racks'' of multispecies finfish.

Comment 67: An association commented that it strongly opposes the total absence of any restrictions that would control the targeting of lobsters by groundfish vessels. It further stated that the absence of any wording regarding the subject allows the unrestricted targeting of lobsters while fishing both during DAS and outside of DAS. The commenter said that this omission encourages a redirection of effort onto the lobster resource.

The association suggested that some significant controls on the targeting of lobsters by groundfish vessels be included in the plan.

Response: Such a restriction is within the purview of the American Lobster FMP and is not, as such an Amendment 7 issue.

Comment 68: A commenter stated that under Amendment 7 (and acknowledged under Amendment 5 as well), a vessel's length, gross registered tonnage, and net tonnage may be increased only once, not exceeding 10 percent of its previous size. He asserted that, in light of encouragement to pursue underutilized species such as herring which are usually high-volume fisheries, some vessels were rigged for mid-water trawling. As a result, he stated that his vessel is often loaded to the point of being unsafe. He stated that he has already experienced a swamping and suggested that such vessels be allowed to increase hold capacity, i.e., length and tonnage. He stated that the restriction on horsepower is an adequate control on the vessel's fishing power and, therefore, limiting the vessel's other dimensions is not necessary.

Response: This issue relates to the provisions for vessel upgrades as established by the regulations implementing Amendment 5 and which are unchanged by this rule. The purpose of the upgrade restrictions is to prevent limited access multispecies permit holders from increasing the fishing power of their vessels, exacerbating overcapitalization and overfishing issues in this fishery. Horsepower alone is not a sufficient limitation of vessel fishing power, especially where the current horsepower of the vessel may allow the other dimensions to be increased. Moreover, a vessel that wishes to fish for herring and other mid-water trawl fisheries not regulated under the Northeast Multispecies FMP may elect to give up their limited access permits thereby avoiding vessel upgrade restrictions.

Comment 69: The Marine Mammal Commission stated that to make meaningful progress towards meeting the Council's revised harbor porpoise goal and requirements of the Marine Mammal Protection Act (MMPA), the network of time-area closures for the coming year should be expanded. The Marine Mammal Commission suggested that the Council's Harbor Porpoise Review Team (HPRT) meet in time to implement any recommendations it might make for the summer-fall fishing season off the coast of central and northern Maine. It also recommended, to better cover the potential periods of high bycatch in the Mid-coast area as reflected by current observer data, that the Council and/or NMFS consider

expanding the effective dates for the Mid-coast closure to include the months of September through December and April through May. It added that it believed that it would be reasonable to allow fishing with acoustic deterrents in the extended closure periods recommended above provided evidence continues to indicate their effectiveness.

Response: The Council's HPRT met in May to discuss additional expansion of time-area closures. The HPRT recommendations were scheduled for presentation to the Marine Mammal Committee in late May so that measures could be considered by the full Council at its June meeting. This will allow any approved measures to be effective in the mid-coast area by September. Continued use of acoustical devices in these closed areas will be considered based on the results of recently concluded experimental fisheries held this spring and the recommendations of the Harbor Porpoise Take Reduction Team, expected to be available later this summer.

Comment 70: The Marine Mammal Commission stated that as the number of northern right whale calves counted in 1995 is exceeded by the 3 percent mortality reported for the past 12 months, action must be taken to exclude gillnet gear in times and areas where right whales are known to occur in greatest numbers. It added that these areas include the Great South Channel from April through June, and Cape Cod Bay from February through May. It said that action taken by the Council to reduce entanglement threats has been limited, i.e., it has prohibited gillnet fishing in parts of one area (the Great South Channel) that are important for groundfish spawning during part of the peak period of right whale occurrence.

The Marine Mammal Commission acknowledged that Amendment 7 proposes expanding the scope of the Council's framework adjustment procedure to include possible closures to protect right whales and other endangered whales, however, no further measures are proposed in Amendment 7 in this regard and it is unclear whether or when the Council might use this authority.

Therefore, the Marine Mammal Commission recommended that NMFS either expand Amendment 7 or take separate action under authority of the Endangered Species Act (ESA) and MMPA to prohibit the use of gillnets from April through June in the Great South Channel area, which is designated as critical right whale habitat).

In addition, the Marine Mammal Commission recommended that NMFS consult with the Commonwealth of Massachusetts to develop measures for gillnets and other fishing gear capable of entangling right whales from February through May in the Cape Cod Bay right whale critical habitat.

Response: The issues raised in this comment can be addressed under the framework actions, provided for in the final rule. The NEFMC did not forward a recommendation to expand the Area 1 closure to include the entire right whale critical habitat in time for implementation this spring. In order for NMFS to issue a regulation under the ESA, to be effective by April 1997, NMFS would need to publish a proposed rule within the next few months. NMFS is considering regulatory options to accomplish this.

NMFS will soon sign a Cooperative Agreement with the Commonwealth of Massachusetts to enter into a coordinated state-Federal effort to protect and recover the endangered and threatened marine fauna of Massachusetts, including the right whale. Once signed, both parties will begin discussion of several endangered species issues within the Commonwealth, including additional protection for the right whale critical habitat area in Cape Cod Bay.

Comment 71: An association stated that under the MMPA, NMFS classifies the sink gillnet fishery as a Category I and bottom trawl, longline, and hook and line fisheries as Category III. However, Amendment 7 states ''it should be noted that the bottom trawl fishery has incidental takes of striped dolphins, coastal bottlenose dolphins and pilot whales.'' The commenter suggested that based on this finding alone, the bottom trawl; fishery ought to be moved to Category II.

Response: This comment relates to MMPA requirements and is not relevant to Amendment 7. In any event, most of the few takes observed in this fishery were determined to have been dead before being taken. In addition, because the observer coverage was low, the estimated serious injury and mortality levels extrapolated from those few data points is statistically weak. Therefore, it was determined that the ''North Atlantic Bottom Trawl'' fishery would remain as a Category III fishery under the MMPA in the final rule to establish the 1996 List of Fisheries (60 FR 67063, December 28, 1995).

Comment 72: An association stated that closed areas should be opened to low-impact hook fishing during non-spawning periods.

Response: One reason for the existence of closed areas is to halt fishing mortality during the period of closure. Any type of fishing would defeat the purpose of the closure.

14. Comments on Protection of Habitat

Comment 73: Many comments were submitted raising issues related to the impact of certain fishing gears on marine habitat and, in some cases, proposing restrictions on this gear and providing incentives for other gear types. The major points of all habitat-related comments are summarized below, with emphasis on comments from the Darling Marine Center at the University of Maine and the Cape Cod Commercial Hook Fishermen's Association, because they are representative of issues raised in the majority of the other comments received.

One said NMFS should be an active partner with the Council in identifying areas of critical concern and investigate the use of intensive gear, and if necessary, restrict or prohibit particular gear use. There was general disagreement that additional studies would be a sufficient management approach and further disagreement with the decision not to include trawl gear restrictions at this time.

One group stated that trawling and dredging activities have the capability of altering structurally complex bottom communities, principally through the removal of biomass, and that these alterations will result in completely different bottom communities occupying these locations.

In discussing the legal standards of the Magnuson Act and the APA, this group stated that an international consensus is emerging that management agencies should apply a precautionary approach to fisheries management. It was emphasized that it would be more prudent to protect some of these areas as soon as possible by establishing marine reserves to protect specific habitat features such as habitat complexity. Increased complexity would result in increasing survivorship of postlarval and early juvenile size classes, thus increasing recruitment to harvested populations. Given the particular relevance of the precautionary approach to the numerous uncertainties involved in managing fisheries, it would seem to be incumbent upon managers and research scientists alike to prevent long-term damage to ecosystems from occurring while their theories are being tested.

An association contends that Amendment 7 fails the following national standards for the reasons mentioned: National Standard 1, by ignoring gears' differential habitat and selectivity impacts; National Standard 2,

because best science demonstrates landings approximate catch only in the hook fishery and also demonstrates that heavy dragger gear damages groundfish habitat, diminishing stocks; National Standard 3, by ignoring management units based on types of gear and similar fishing practices; National Standard 4, since allocation is necessary to discourage dragging on hard bottom and encourage conversion to hook fishing; National Standard 5, as Amendment 7 does not promote long-run efficiency since fishing power is not reduced absent dragger gear restrictions; and National Standard 6, by ignoring fishing practices and by wrongly incorporating the ''fair and equitable'' standard into analysis of this national standard.

An association disputed the amendment's statement that, as currently drafted, ''(t)he Magnuson Act limits the Council's role to commenting on proposals that would affect fishery resources and their habitats.'' In fact, the commenter notes that beyond merely commenting, the Council is empowered to ''make recommendations concerning any activity . . . that, in the view of the Council, may affect the habitat of a fishery resource * * *.'' 16 U.S.C. section 1852(I)(1)(A).

Response: There is growing interest and research into trawling and dredging effects on bottom habitat and benthic communities. Research to date indicates that mobile gear is having observable effects on the bottom in some areas and little discernable effect in other areas. The causes for differing effects have not yet been identified. In addition, the ecological impacts of mobile gear on commercially important stocks remain largely unknown. NMFS does not believe that the scientific information currently available is adequate to show that placing restrictions on mobile gear would result in benefits for commercially important stocks. NMFS does not intend to wait for ''full scientific certainty'' before making a recommendation that might restrict the use of mobile gear in certain areas, but rather is cautious in instituting such restrictions with uncertain and inadequate data. To seek resolution of this issue, the NMFS and the Council support additional research on this topic so that future management measures can account more for the effects of fishing gear, especially if additional research indicates that recruitment could be enhanced by reducing the amount of disturbance to benthic habitat. Currently the Stellwagen Bank National Marine Sanctuary and NOAA's National Undersea Research Program are among those proposing research into the effects of bottom gear on groundfish habitat.

While NMFS and the Council are not advocating specific management measures to avoid or reduce the effect of mobile fishing gear on bottom habitat, it is worth noting that Amendment 7 does include measures such as closed areas and overall effort reductions that will reduce the amount of trawling and thus reduce the frequency of disturbance to bottom habitat used by multispecies stocks. Although these effort reductions will not include permanent marine reserves that are off-limits to trawling and dredging gear, they might provide opportunities to investigate whether reduced pressure on habitat from bottom gear may over time enhance the structural complexity of the bottom in some areas and increase survivorship of early life stages of commercially important species.

Regarding the role of the Council in respect to habitat, the commenters raise some valid points. Fishery management plans prepared by the Council or Secretary include habitat sections that identify the habitat needs of the species. NMFS works with developers and permitting agencies to avoid, minimize and mitigate the anticipated habitat impacts from a proposed activity. Fishery management plans are one tool NMFS and the Council can use to identify habitat essential to commercial stocks.

The commenters disagree with the Council's approach taken in Amendment 7 that concentrates on achieving reductions in fishing mortality through controls on fishing effort. The supporting analyses for Amendment 7 referenced by the commenters demonstrates that the Council and NMFS realize that the recovery of severely depleted fish stocks can be enhanced by incorporating more comprehensive scientific information into management decisions. In particular, NMFS is committed to conducting additional research into the habitat requirements and life histories of multispecies stocks so that future management actions can focus on those measures that will be most effective in enhancing recruitment. For Amendment 7, NMFS and the Council used available information to develop a suite of management measures, including closed areas and effort reductions, that will reduce fishing pressure on the stocks as well as their habitat. NMFS acknowledges that more work is needed in this area to tailor future management actions to the biological needs of target species, which include habitat requirements.

As discussed throughout this document, NMFS has determined that Amendment 7 is consistent with the national standards, which conclusion is supported by the record of decision.

Comment 74: The Maine DMR stated that the science (both data and theory) supporting management must change and that the importance of such parameters as fish size and the qualitative differences of habitat protection at different seasons should be more effectively integrated into the analysis.

Response: The Council acknowledges, in its discussion on research to support fishery habitat protection (Volume I of Amendment 7), the need to conduct research to determine which habitats are most important to support groundfish stocks throughout their life history stages and to understand factors essential for sustained fisheries production. As stated earlier, habitat protection and conservation is an integral component of fishery management; NMFS strongly supports the advancement of marine research to improve its understanding of the relationship between species and habitat during various life stages. Such information will be incorporated into fishery management plans as it becomes better understood and defined.

Comment 75: An association commented that the national standards dictate a differentiation between hook fishing and other commercial groundfishing, just as has occurred in other regions of the country. It added that the Council predictably relies on the fair and equitable argument to defend its failure to distinguish the commercial hook fishery; however, a Magnuson Act guideline states: ''An allocation need not preserve the status quo in the fishery to qualify as fair and equitable, if a restructuring of fishing privileges would maximize overall benefits.''

An association discusses Norwegian studies that documented how longlining is a more size-selective fishing method than trawling. The commenters pointed out that these studies further proved that yield and employment effects were greater in the longline fishery as compared to the trawl fishery.

Another association commented that the Council rejected the Cape Cod Commercial Hook Fishermen's Association (CCCHFA) plan because it had no measurable objectives, only covered a limited region, and had direct allocation effects on a particular sector of the industry. The association said that the reasons for rejection are without support and invalid as they are contrary

to the administrative record already submitted to the Council.

Response: Gear selectivity was discussed in the development process of Amendment 7 but rejected as an option in the final outcome. In making this decision, the Council and NMFS determined that the management regime should, to the extent practicable, preserve the multifaceted nature of the Northeast Multispecies fishery. The Council could revisit this issue at a later time through the expansive framework capability under Amendment 7.

Comments on Enforceability Issues

The USCG and NMFS Enforcement requested that a vessel operator be required to retain on board all DAS confirmation numbers for the current fishing year. The Council decided that this was an unnecessary burden on the industry and recommended instead that they be required to retain numbers for the current and immediately prior trips. The Council's recommendation is adopted here.

They requested that the current provision requiring a vessel to have a standard tote on board the vessel be retained. This provision was inadvertently deleted in the proposed rule and is reinserted here.

They commented that the call-in requirement for charter/party vessels would not enhance enforcement and should be disapproved. The measure has been disapproved.

They requested a change to require a vessel operator when hailed by an authorized officer via VHF–FM radio, to respond to such hail. This change has been incorporated.

The Council requested a revision to the definition for the ''Multispecies Monitoring Committee'' to clarify their intent with respect to membership. This change is incorporated in the final rule.

The Council suggested an addition to the qualification criteria for Hook-gear limited access permits to clarify how recreational landings should be handled. This change is incorporated. Additional comments of enforcement concern follow.

Comment 76: The USCG stated that Amendment 7 cannot be successful without a fully integrated approach between its at-sea efforts and NMFS Enforcement shoreside activities. It stated that it is prepared to assign a high priority to enforcement concerns.

A commenter stated that Amendment 7, without enforcement, will not affect that segment of the fleet that systematically uses small mesh liners inside the regulated mesh size codend. The commenter added that during the lag time between assessment and final judgment of those perpetrators that are caught, the perpetrators still fish, contract debt and shelter revenue. He stated that at-sea enforcement must be fast and without warning to be effective and justice should be swift. He added that a port reporting and enforcement system that effectively detects misreporting or no reporting of catch is also needed.

Another commenter stated that some kind of incentive to follow the rules is needed. He implied that some people who will be left in the fishery will not follow the rules.

An association stated that TACs encourage non-compliance in the form of under-reporting and high-grading and are costly to enforce.

Response: NMFS Northeast Region enforcement personnel and the USCG First District Commander have integrated their planning to ensure that there is an effective USCG—NMFS enforcement strategy in place to support Amendment 7. NMFS Law Enforcement continues to work toward effective implementation of the effort control and monitoring measures in the Multispecies fishery and will explore ways to improve compliance with existing regulations in partnership with the USCG and natural resources divisions of each coastal state. NMFS Law Enforcement and NOAA General Counsel work cooperatively to investigate and bring to a conclusion, all cases involving violation of the conservation regulations. NMFS Law Enforcement believes in the concept of voluntary compliance and is actively pursuing education as a means to attainment of voluntary compliance. This effort, combined with penalties as appropriate, provide the incentives to adhere to conservation regulations.

Comment 77: A commenter stated that the present vessel call-in system to monitor DAS is obsolete and recommends instituting a basic VTS without messaging capability or a magnetic card system with PIN number verification.

Response: Under Amendment 7 approximately 800 additional vessels operating in the Northeast Multispecies Fishery will be required to report their departures and arrivals from and to port via telephone under applicable effort reduction reporting provisions. A magnetic card system is not logistically feasible as it would require installation of a magnetic card reader device in every operating port on the Northeast seaboard. When a basic VTS system is adopted, the final performance standards for all VMS identify two-way messaging capability as a fundamental performance requirement for any VMS system approved by NMFS. A VTS requirement was established in Amendment 5, but is awaiting testing and vendor certification procedures to be complete before it becomes fully implemented.

Changes in the Final Rule From the Proposed Rule

As discussed above, some changes from the proposed rule were necessary to respond to a review of the amendment by NMFS Office of Law Enforcement, the Council's Law Enforcement Committee and the USCG. Other changes made are technical or administrative in nature and clarify or otherwise enhance enforcement and administration of the fishery management program. These changes are listed below in the order that they appear in the regulations.

In § 651.2, the definition for ''DAS (Days-at-Sea)'' is revised to remove the disapproved provision to count DAS for gillnet vessels as time when gear is in the water.

In § 651.2, the definition for ''Multispecies Monitoring Committee'' is revised to clarify that the number of representatives from the affected coastal states appointed by the ASMFC is limited to two.

In § 651.2, definitions ''Prior to leaving port'' and ''Upon returning to port'' are added to clarify when a vessel must begin and end a multispecies DAS trip under the call-in requirement.

In § 651.2, the definition for ''Standard box'' is no longer necessary and is removed.

In § 651.2, the definition for ''Sink gillnet'' is revised for clarification.

In § 651.4, paragraph (b)(1)(ii)(A) is revised to clarify the qualification criteria for limited access Hook-Gear permits for recreational vessels that recorded landings by number and not by weight.

In § 651.4, paragraph (f)(3) is revised to clarify that a vessel has only one opportunity to change its permit category in 1996 during the 45-day time period after implementation of this rule and that this 45-day opportunity will be available each fishing year.

In § 651.9, paragraph (a)(3) duplicated (a)(4) in the proposed rule and is removed, paragraphs (a)(4) through (a)(13) are redesignated as (a)(3) through (a)(12), respectively.

In § 651.9, paragraph (b)(4), the prohibition on possession limits is revised to reflect changes in § 651.27 due to the disapproval of the possession limit for winter flounder.

In § 651.9, paragraph (b)(8), which referenced a disapproved provision, is removed, and paragraphs (b)(9) through

(b)(12) are redesignated (b)(8) through (b)(11), respectively.

In § 651.9, paragraphs (c)(4) and (d)(4) are added to enhance enforcement of the provisions in § 651.33(a) and (c).

In § 651.9, paragraph (e)(8), a reference to § 650.20 is corrected to read § 651.20.

In § 651.9, paragraphs (e)(12), (e)(13), (e)(14), and (e)(15), are revised by being made more explicit.

In § 651.9, paragraph (e)(17) is revised by eliminating the reference to § 651.20(d)(3), a reference to the disapproved winter flounder exemption in the Mid-Atlantic regulated mesh area.

In § 651.9, paragraph (e)(22) is made more explicit.

In § 651.9, paragraph (e)(32) is made more explicit.

In § 651.9, paragraph (e)(38) is added to reflect the requirement to have a standard tote on board when fishing under a possession limit restriction.

Section 651.10 is revised, as requested by the Council, NMFS Enforcement and the USCG, to include a requirement that a vessel operator respond if hailed by an authorized officer via VHF-FM radio.

In § 651.20, paragraphs (a)(2)(ii), (c)(2)(ii), and (d)(2)(ii) are revised to include cross references to the Large Mesh Individual DAS Category in § 651.22(b)(7) approved under the resubmitted portion of Amendment 7.

In § 651.20, paragraph (d)(2) is revised to remove the reference to paragraph (d)(3), the disapproved winter flounder possession limit.

In § 651.20, paragraph (d) the definition of the ''Mid-Atlantic Regulated Mesh area,'' is slightly revised as a result of comments from and an agreement between the states bordering the area, the USCG and NMFS enforcement.

In § 651.20, paragraph (d)(3) is removed to reflect the disapproval of the winter flounder possession limit in the Mid-Atlantic regulated mesh area.

In § 651.20, paragraph (g) is revised to clarify that the net measurement procedure described referred to all nets with the exception of gillnets. Paragraph (g)(4) is added to include net measurement procedures for gillnet gear. Implementation of this procedure is delayed to allow the gillnet fleet time to adjust to this new procedure.

In § 651.20, paragraph (i) is revised to clarify that scallop vessels possessing multispecies must have a valid multispecies permit issued under this part.

In § 651.20 (i) and (j)(7), § 651.27, and § 651.33(a) and (c), a measure inadvertently deleted in the proposed rule, that requires vessels when subject to a possession limit to have on board at least one standard tote, is added.

In § 651.22, paragraphs (b)(1)(i) and (b)(2)(i), (b)(5)(i), (b)(6)(i), and (b)(7)(i) have been revised to reflect that the DAS allocations for the 1996 fishing year have been prorated based on the amount of time remaining in the 1996 fishing year, or 83 percent.

In § 651.22, paragraphs (b)(1)(ii) and (b)(2)(ii) are revised to reflect that vessels holding both Gillnet and Individual DAS category permits are to be initially assigned into the Fleet DAS category, rather than the Individual DAS category.

In § 651.22, paragraph (b)(6) is revised and paragraph (b)(7) is added to reflect the approval of the measures included in the resubmitted part of Amendment 7, which allows vessels the ability to elect either the Large Mesh Fleet DAS program or the Large Mesh Individual DAS program.

In § 651.22, paragraph (c) is redesignated as paragraphs (c)(1) and (c)(2) to clarify that a vessel possessing both a 1995 limited access Gillnet permit and Individual DAS permit is eligible to appeal its initial allocation of gillnet DAS.

In § 651.22, paragraph (d)(2)(i), the date by which a vessel may appeal its allocation of DAS is revised to reflect a later than anticipated implementation date for this amendment.

In § 651.22, paragraph (g), is clarified by replacing the phrase ''fishing year'' with ''calender year'' and by clarifying the requirement for the 1996 calender year.

In § 651.27, paragraph (b) is removed to reflect that the possession limit for winter flounder has been disapproved, paragraph (c) is redesignated as paragraph (b), and the title to § 651.27 was revised accordingly.

In § 651.28, paragraph (c) is removed to reflect the disapproval of the charter/party call-in requirement.

In § 651.29, paragraphs (b)(1), (b)(2), (b)(4), and (b)(5), all references to charter/party vessels are removed to reflect that the call-in requirement for charter/party vessels has been disapproved.

In § 651.29, paragraph (b)(3) is revised to clarify that DAS confirmation numbers for the current trip and immediately prior multispecies fishing trip must be retained on board the vessel.

In § 651.29, paragraph (d) is revised to reflect the disapproval of the proposal to count gillnet DAS as time when gillnet gear is in the water.

In § 651.29, paragraph (e) is added to describe the call-in requirement for the 20 day spawning season restriction.

In § 651.32, paragraph (a), the reference to § 651.32(h) is corrected to read § 651.21(h), and paragraph (a) is redesignated as paragraphs (a)(1) and (a)(2) to include gillnet area closures that were implemented on March 5, 1996 (61 FR 8494) under Framework 14 to the FMP.

In § 651.33, paragraph (b), the phrase ''and has declared into the charter/party fishery'' is removed to reflect that the declaration into the charter/party fishery has been disapproved.

In § 651.40, paragraph (a)(3), the reference to (a)(5) is corrected to read (a)(6).

Classification

The Regional Director determined that Amendment 7 to the FMP is necessary for the conservation and management of the Northeast multispecies fishery and that it is consistent with the Magnuson Act and other applicable laws.

The Council prepared a FSEIS for Amendment 7; a notice of availability was published on February 16, 1996 (61 FR 6230). This action is expected to have a significant economic impact on the human environment. The Assistant Administrator for Fisheries, NOAA (AA), determined upon review of the FSEIS and public comments on the Draft SEIS that the PA of the amendment is environmentally preferable to the SQ. The FSEIS demonstrates that the PA contains management measures able to rebuild severely depleted stocks of haddock, cod, and yellowtail flounder; protect harbor porpoise; provides economic and social benefits to the fishing industry in the long term; and should provide better balance in the ecosystem in terms of groundfish resources.

This final rule has been determined to be ''economically significant'' for purposes of E.O. 12866, but probably will not have an annual impact on the economy of $100 million or more, and will not adversely affect the productivity, environment, public health or safety or state, local or tribal governments or communities in the long term. By increasing multispecies catch rates in the long term and reducing operating costs, this action is expected to make the industry more productive after recovery of multispecies stock abundance and to increase the competitiveness of the domestic industry in comparison to foreign suppliers.

In compliance with the RFA, the Council prepared an IRFA as part of the RIR that concluded that this action would have significant economic impacts on a substantial number of small entities. The FRFA consists of the

IRFA and comments and responses in this final rule associated with the public's concerns about possible effects of this rule on small entities. Responses to comment numbers 12, 13, 14, 18, 22, 23, 25, 26, 27, 28, 29, 35, 37, 39, 40, 43, 46, 48, 51, 58, 65, and 67 are especially relevant to concerns of the public about possible effects of one or more measures contained in this rule on small entities, often focusing on a particular group of small entities. The measures contained in this rule are restrictive, and impacts on the industry are expected to be significant. In the early years of the program, some vessels may be unable to cover their costs in part because of these restrictions and also due to the poor condition of the stocks. Such vessels are expected to leave the fishery. Relative to the SQ, however, this program is expected to produce higher long-term benefits to the industry and the Nation. The majority of the vessels in the Northeast multispecies fishery are considered small entities. This action is expected to reduce the overall revenues of the multispecies industry by approximately 10 to 25 percent in the first 3 years of the program compared to the SQ. The impact of the action will not be uniform for all vessels or all sectors. Instead, the action will have differential effects on gear groups, with trawlers potentially being relatively more disadvantaged than other vessels. This is primarily because trawlers produce the largest share of total multispecies landings and have higher costs. Alternately, smaller and independent vessels are well suited to adapting to year to year changes in species as availability changes. Generally, smaller vessels are more flexible and have lower costs. This action will allow vessels less than or equal to 30 ft (9.1 m) to be exempt from the DAS program, provided they comply with the 300-lb (136.1–kg) CHY possession limit. The CHY comprise 15 percent of the revenue of these vessels.

The negative effects of the non-selected alternatives would be greater than those of the selected measures. Expected impacts of the action on crew income are negative in the first 5 years of the program and positive thereafter. Likewise, the level of employment is expected to decline in the short-term to an undetermined extent but will rebound over the long term. Projected revenues from fishing will be positive beginning in the year 2001, which will create demand for other goods and services in the area and lead to increased production and employment. The overall impacts will be positive. The action is expected to increase net benefits to the nation by $18 million over the 10-year rebuilding period. The recreational sector is not expected to be negatively impacted by this action.

Also, regarding the RFA, steps are being taken by NOAA to reduce the socio-economic burden on small entities through a buyout program, being implemented in two phases, aimed at reducing fishing capacity in the groundfish fishery and offering an economic alternative to vessel owners in the fishery. NOAA awarded grants to 11 New England fishing vessels under a $2 million pilot buyout program in February, 1996, in return for scrapping their vessels and surrendering their fishing permits. A larger vessel buyout program for as much as $25 million is being developed for implementation after Amendment 7 is made effective.

Notwithstanding any other provision of law, no person is required to respond to nor shall a person be subject to a penalty for failure to comply with a collection of information subject to the requirements of the Paperwork Reduction Act unless that collection of information displays a currently valid OMB control number.

This rule contains six new collection of information requirements subject to the Paperwork Reduction Act. The collection of this information has been approved by the OMB, and the OMB control numbers and public reporting burden are listed as follows:

1. The Nantucket Shoals Dogfish exemption, OMB# 0648–0202, will require vessel notification (2 minutes/response).

Revisions to the existing requirements are:

2. Proof of VTS installation, OMB# 0648–0202, (2 minutes/response);

3. Call-in or card system, OMB# 0648–0202, (2 minutes/response);

4. Limited access permit, OMB# 0648–0202. Appeal of the DAS allocation will require written submission (2 hours/response);

5. Limited access permit appeals, OMB# 0648–0202, appeal of denied permits will require written submission (0.5 hours/response);

6. Three new vessel permit categories (Handgear, Charter/Party and Scallop Multispecies Possession Limit), OMB # 0648–0202, are created with no increase in burden above that currently associated with vessel permits.

A formal section 7 consultation under the ESA was initiated for Amendment 7 to the FMP. In a biological opinion dated February 16, 1996, the AA determined that fishing activities conducted under Amendment 7 and its implementing regulations may affect, but are not likely to jeopardize the continued existence of any endangered or threatened species under the jurisdiction of NMFS or result in the destruction or adverse modification of critical habitat.

Adverse impacts on marine mammals resulting from fishing activities conducted under this rule are discussed in the FSEIS.

List of Subjects in 50 CFR Part 651

Fisheries, Fishing, Reporting and recordkeeping requirements.

Dated: May 28, 1996.

Gary Matlock,

Program Management Officer, National Marine Fisheries Service.

For the reasons set out in the preamble, 50 CFR part 651 is amended to read as follows:

PART 651—NORTHEAST MULTISPECIES FISHERY

1. The authority citation for part 651 continues to read as follows:

Authority: 16 U.S.C. *et seq.*

2. In § 651.2, the definition for ''Charter and party boats'', ''Sink gillnet'', and ''Standard Box'' are removed; the definitions for ''Alewife'', ''American shad'', ''Atlantic croaker'', ''Black sea bass'', ''Blowfish'', ''Bluefish'', ''Charter or party boat or charter/party boat'', ''Conger eels'', ''Cunner'', ''Dogfish'', ''Exempted gear'', ''Fourspot flounder'', ''Hagfish'', ''Handgear'', ''Handline or handline gear'', ''Hickory shad'', ''John Dory'', ''Longhorn sculpin'', ''Mullet'', ''Multispecies Monitoring Committee'', ''Prior to leaving port'', ''Rod and reel'', ''Scup'', ''Sea raven'', ''Searobin'', ''Sink gillnet or bottom-trawling gillnet'', ''Skate'', ''Spot'', ''Summer flounder'', ''Swordfish'', ''Target Total Allowable Catch (TAC)'', ''Tautog'', ''Tilefish'', ''Upon returning to port'', and ''Weakfish'' are added, in alphabetical order; and the definitions for ''DAS (Day(s)-at-sea)'', and ''Out of the multispecies fishery or DAS program'' are revised to read as follows:

§ 651.2 Definitions.

* * * * *

Alewife means *Alosa pseudoharengus.*

* * * * *

American shad means *Alosa sapidissima.*

Atlantic croaker means *Micropogonias undulatus.*

* * * * *

Black sea bass means Centropristis striata.

Blowfish (puffer) means any species in the family *Tetraodontidae.*

Bluefish means *Pomatomus saltatrix.*

* * * * *

Charter or party boat or charter/party boat means any vessel carrying passengers for hire to engage in recreational fishing and that is not fishing under a DAS.

* * * * *

Conger eels means *Conger oceanicus.*

* * * * *

Cunner means *Tautogolabrus adspersus.*

DAS (Day(s)-at-sea) means the 24-hour periods of time during which a fishing vessel is absent from port in which the vessel intends to fish for, possess or land, or fishes for, possesses, or lands regulated species.

* * * * *

Dogfish means spiny dogfish, *Squalus acanthias,* or smooth dogfish, *Mustelus canis.*

* * * * *

Exempted gear means gear that is deemed to be not capable of catching multispecies finfish and includes: Pelagic hook and line, pelagic longline, spears, rakes, diving gear, cast nets, tongs, harpoons, weirs, dipnets, stop nets, pound nets, pelagic gillnets, pots and traps, purse seines, shrimp trawls (with a properly configured grate as defined under this part), and mid-water trawls.

* * * * *

Fourspot flounder means *Paralichthys oblongus.*

* * * * *

Hagfish means *Myxine glutinosa.*

Handgear means handline or rod and reel gear.

Handline or handline gear means fishing gear that is released by hand and consists of one main line to which is attached up to two leaders for a total of not more than three hooks. Handlines are retrieved only by hand, not by mechanical means.

* * * * *

Hickory shad means *Alosa mediocris.*

* * * * *

John Dory means *Zenopsis conchifera.*

* * * * *

Longhorn sculpin means *Myoxocephalus octodecimspinosus.*

* * * * *

Mullet means any species in the family *Mugilidae.*

* * * * *

Multispecies Monitoring Committee means a team of scientific and technical staff appointed by the Council to review, analyze, and recommend adjustments to the management measures. The team will consist of staff from the New England and Mid-Atlantic Fishery Management Councils, the NMFS Northeast Regional Office, the NEFSC, the U.S. Coast Guard, an industry representative, and up to two representatives from each affected coastal state appointed by the Atlantic States Marine Fisheries Commission.

* * * * *

Out of the multispecies fishery or DAS program means the period of time during which a vessel is absent from port and is not fishing for regulated species under the multispecies DAS program.

* * * * *

Prior to leaving port, for purposes of the notification systems described in § 651.29, means prior to departing from the last dock or mooring in port to engage in fishing, including the transport of fish to another port.

* * * * *

Rod and reel means a hand-held (including rod holder) fishing rod with a manually operated reel attached.

* * * * *

Scup means *Stenotomus chrysops.*

Sea raven means *Hemitripterus americanus.*

Searobin means any species in the family *Triglidae.*

Sink gillnet or bottom-tending gillnet means any gillnet, anchored or otherwise, that is designed to be, or is fished on or near the bottom in the lower third of the water column.

Skate means any species in the family *Rajidae.*

Spot means *Leiostomus xanthurus.*

* * * * *

Summer flounder means *Paralichthys dentatus.*

Swordfish means *Xiphias gladius.*

Target Total Allowable Catch (TAC) means the annual domestic harvest targets for regulated species.

Tautog (blackfish) means *Tautoga onitis.*

* * * * *

Tilefish means *Lopholatilus chamaeleonticeps.*

* * * * *

Upon returning to port, for purposes of the call-in notification system, means the first point when a vessel ties up at a dock or mooring in a port at the end of a fishing trip.

* * * * *

Weakfish means *Cynoscion regalis.*

* * * * *

3. In § 651.4, paragraphs (a), (b), (c), (e), (f), (h)(1)(ii), (h)(1)(iii), and (q) are revised to read as follows:

§ 651.4 Vessel permits.

* * * * *

(a) *General.* Any vessel of the United States, including a charter or party boat, must have been issued and have on board a valid Federal multispecies permit issued under this part to fish for, possess or land multispecies finfish in or from the EEZ. Recreational vessels and vessels fishing for multispecies exclusively in state waters are exempt from this requirement.

(b) *Limited access permits*—(1) *Eligibility*—(i) *Limited access multispecies permit.* To be eligible for a multispecies limited access permit, specified in § 651.22, in 1996 and thereafter, a vessel must have been issued a limited access multispecies permit for the preceding year, must be replacing a vessel that was issued a limited access multispecies permit for the preceding year, or must qualify for a 1996 limited access multispecies permit under paragraph (b)(1)(ii) of this section.

(ii) *Limited access Hook-Gear permit.* A vessel issued a 1995 open access Hook-Gear permit may apply for and obtain a 1996 limited access Hook-Gear permit provided it meets the criteria for eligibility described below. Vessels must apply for a limited access Hook-Gear permit before September 1, 1996, to receive an automatic mailing of an application to renew their permit in 1997 and to be ensured that their permit application will be processed within the 30 days allowed under paragraph (e) of this section. Vessels applying after December 31, 1996, will be ineligible to apply for a 1997 limited access Hook-Gear permit. A vessel qualifying for a limited access Hook-Gear permit may not change its limited access permit category. The criteria for eligibility are as follows:

(A) The vessel held a 1995 open access Hook-Gear permit and submitted to the Regional Director, no later than January 26, 1996, fishing log reports dated between June 1, 1994 and June 1, 1995, when fishing with hook gear under the open access Hook-Gear permit, documenting landings of at least 500 lb (226.8 kg) of multispecies finfish; or its equivalent in numbers of fish; or

(B) The vessel is replacing a vessel that meets the criteria set forth in paragraph (b)(1)(ii)(A) of this section.

(2) *Qualification restriction.* Unless the Regional Director determines to the contrary, no more than one vessel may qualify, at any one time, for a limited access multispecies permit based on that or another vessel's fishing and permit history. If more than one vessel owner claims eligibility for a limited access multispecies permit, based on one vessel's fishing and permit history, the Regional Director shall determine who is entitled to qualify for the limited access multispecies permit and the DAS

allocation according to paragraph (b)(3) of this section.

(3) *Change in ownership.* The fishing and permit history of a vessel is presumed to transfer with the vessel whenever it is bought, sold, or otherwise transferred, unless there is a written agreement, signed by the transferor/seller and transferee/buyer, or other credible written evidence, verifying that the transferor/seller is retaining the vessel's fishing and permit history for purposes of replacing the vessel.

(4) *Replacement vessels.* To be eligible for a limited access permit under this section, the replacement vessel must meet the following criteria and any applicable criteria under paragraph (b)(5) of this section:

(i) The replacement vessel's horsepower may not exceed by more than 20 percent the horsepower of the vessel that was initially issued a limited access multispecies permit as of the date the initial vessel applied for such permit.

(ii) The replacement vessel's length, gross registered tonnage, and net tonnage may not exceed by more than 10 percent the length, gross registered tonnage, and net tonnage of the vessel that was initially issued a limited access multispecies permit as of the date the initial vessel applied for such permit. For purposes of this paragraph, a vessel not required to be documented under title 46, U.S.C. will be considered to be 5 net tons. For undocumented vessels, gross registered tonnage does not apply.

(5) *Upgraded vessel.* To remain eligible to retain a valid limited access permit under this part, or to apply for or renew a limited access permit under this part, a vessel may be upgraded, whether through refitting or replacement, only if the upgrade complies with the following limitations:

(i) The vessel's horsepower may be increased, whether through refitting or replacement, only once. Such an increase may not exceed 20 percent of the horsepower of the vessel initially issued a limited access multispecies permit as of the date the initial vessel applied for such permit.

(ii) The vessel's length, gross registered tonnage, and net tonnage may be upgraded, whether through refitting or replacement, only once. Such an increase shall not exceed 10 percent each of the length, gross registered tonnage, and net tonnage of the vessel initially issued a limited access multispecies permit as of the date the initial vessel applied for such permit. This limitation allows only one upgrade, at which time any or all three specifications of vessel size may be increased. This type of upgrade may be done separately from an engine horsepower upgrade.

(6) *Consolidation restriction.* Limited access permits under this permit and DAS allocations may not be combined or consolidated.

(7) *Appeal of denial of limited access multispecies permit.*

(i) Any applicant eligible to apply for an initial limited access Hook-Gear permit who is denied such permit may appeal the denial to the Regional Director within 30 days of the notice of denial. Any such appeal must be based on one or more of the following grounds, must be in writing, and must state the grounds for the appeal:

(A) The information used by the Regional Director was based on mistaken or incorrect data;

(B) The applicant was prevented by circumstances beyond his/her control from meeting relevant criteria; or

(C) The applicant has new or additional information.

(ii) The Regional Director will appoint a designee who will make the initial decision on the appeal.

(iii) The appellant may request a review of the initial decision by the Regional Director by so requesting in writing within 30 days of the notice of the initial decision. If the appellant does not request a review of the initial decision within 30 days, the initial decision shall become the final administrative action of the Department of Commerce.

(iv) Upon receiving the findings and a recommendation, the Regional Director will issue a final decision on the appeal. The Regional Director's decision is the final administrative action of the Department of Commerce.

(v) *Status of vessels pending appeal of a limited access permit denial.* A vessel denied a limited access Hook-Gear permit may fish under the limited access Hook-Gear category, provided that the denial has been appealed, the appeal is pending, and the vessel has on board a letter from the Regional Director authorizing the vessel to fish under the limited access Hook-Gear category. The Regional Director will issue such a letter for the pendency of any appeal. Any such decision is the final administrative action of the Department of Commerce on allowable fishing activity pending a final decision on the appeal. The authorizing letter must be carried on board the vessel. If the appeal is finally denied, the Regional Director shall send a notice of final denial to the vessel owner; the authorizing letter becomes invalid 5 days after receipt of the notice of denial.

(8) *Limited access permit restrictions.* (i) A vessel may be issued a limited access multispecies permit in only one category during a fishing year. Vessels are prohibited from changing limited access multispecies permit categories during the fishing year, except as provided in paragraph (f)(3) of this section. A vessel issued a limited access Hook-Gear permit may not change its limited access permit category at any time.

(ii) With the exception of Combination Vessels, sea scallop dredge vessels are prohibited from being issued a limited access multispecies permits.

(9) *Confirmation of Permit History.* Notwithstanding any other provisions of this part, a person who does not currently own a fishing vessel, but who has owned a qualifying vessel that has sunk, been destroyed, or transferred to another person, may apply for and receive a Confirmation of Permit History if the fishing and permit history of such vessel has been retained lawfully by the applicant. To be eligible to obtain a Confirmation of Permit History, the applicant must show that the qualifying vessel meets the eligibility requirements, as applicable, in this part. Issuance of a valid and current Confirmation of Permit History preserves the eligibility of the applicant to apply for or renew a limited access multispecies permit for a replacement vessel based on the qualifying vessel's fishing and permit history at a subsequent time, subject to the replacement provisions specified at § 651.4. A Confirmation of Permit History must be applied for and received on an annual basis in order for the applicant to preserve the fishing rights and limited access eligibility of the qualifying vessel. If fishing privileges have been assigned or allocated previously under this part based on the qualifying vessel's fishing and permit history, the Confirmation of Permit History also preserves such fishing privileges. Any decision regarding the issuance of a Confirmation of Permit History for a qualifying vessel that has applied for or been issued previously a limited access permit under this part is a final agency action subject to judicial review under 5 U.S.C. 704. Applications for a Confirmation of Permit History must be received by the Regional Director by the beginning of the fishing year for which the Confirmation of Permit History is required. Information requirements for the Confirmation of Permit History application shall be the same as those for a limited access permit with any request for information about the vessel being applicable to the qualifying vessel

that has been sunk, destroyed or transferred. Vessel permit applicants who have been issued a Confirmation of Permit History and who wish to obtain a vessel permit for a replacement vessel based upon the previous vessel history may do so pursuant to paragraph (b)(4) of this section.

(c) *Open access permits.* Subject to the restrictions in § 651.33, a U. S. vessel that has not been issued a limited access multispecies permit may obtain an open access Handgear or Charter/party permit. Vessels that are issued a valid scallop limited access permit under § 650.4 of this chapter and that have not been issued a limited access multispecies permit may obtain an open access Scallop Multispecies Possession Limit permit.

* * * * *

(e) *Vessel permit application.* Applicants for a permit under this section must submit a completed application on an appropriate form obtained from the Regional Director. The application must be signed by the owner of the vessel, or the owner's authorized representative, and be submitted to the Regional Director at least 30 days before the date on which the applicant desires to have the permit made effective. The Regional Director will notify the applicant of any deficiency in the application pursuant to this section. Applicants for limited access multispecies permits shall provide information with the application sufficient for the Regional Director to determine whether the vessel meets the eligibility requirements specified.

(f) *Information requirements.* (1) In addition to applicable information required to be provided by paragraph (e) of this section, an application for a permit must contain at least the following information, and any other information required by the Regional Director: Vessel name; owner name, mailing address, and telephone number; U.S. Coast Guard documentation number and a copy of the vessel's current U.S. Coast Guard documentation or, if undocumented, state registration number and a copy of the current state registration; party/charter boat license; home port and principal port of landing; length overall; gross tonnage; net tonnage; engine horsepower; year the vessel was built; type of construction; type of propulsion; approximate fish-hold capacity; type of fishing gear used by the vessel; number of crew; number of party or charter passengers licensed to carry (if applicable); permit category; if the owner is a corporation, a copy of the current Certificate of Incorporation, or other corporate papers showing incorporation and the names of the current officers in the Corporation, and the names and addresses of all shareholders owning 25 percent or more of the corporation's shares; if the owner is a partnership, a copy of the current Partnership Agreement and the names and addresses of all partners; if there is more than one owner, names of all owners owning a 25 percent interest or more; and, name and signature of the owner or the owner's authorized representative.

(2) Applications for an initial limited access Hook-Gear permit must also contain the following information:

(i) If the engine horsepower was changed or a contract to change the engine horsepower had been entered into prior to May 1, 1996, such that it is different from that stated in the vessel's most recent application for a Federal Fisheries Permit before May 1, 1996, sufficient documentation to ascertain the different engine horsepower. However, the engine replacement must be completed within 1 year of the date of when the contract for the replacement engine was signed.

(ii) If the length, gross tonnage, or net tonnage was changed or a contract to change the length, gross tonnage or net tonnage had been entered into prior to May 1, 1996, such that it is different from that stated in the vessel's most recent application for a Federal Fisheries Permit, sufficient documentation to ascertain the different length, gross tonnage or net tonnage. However, the upgrade must be completed within 1 year from the date when the contract for the upgrade was signed.

(3) A vessel issued a limited access multispecies permit may request a change in permit category, unless otherwise restricted by paragraph (b)(8) of this section. In 1996, the vessel owner, or the owner's authorized representative, has one opportunity to request a change in permit category by submitting an application to the Regional Director by July 15, 1996. After this date, the vessel must fish only in the DAS program assigned for the remainder of the 1996 fishing year and must comply with the restrictions applicable to such category. Any DAS that a vessel uses prior to a change in permit category will be counted against its allocation received under any subsequent permit category. For 1997 and beyond, limited access multispecies vessels eligible to request a change in permit category must elect a category prior to the start of each fishing year and will have one opportunity to request a change in permit category by submitting an application to the Regional Director within 45 days of receipt of their permit. After this date, the vessel must fish only in the DAS program assigned for the remainder of the fishing year and must comply with the restrictions applicable to such category. Any DAS that a vessel uses prior to a change in permit category will be counted against its allocation received under any subsequent permit category. A vessel issued an open access permit may request a different open access permit category by submitting an application to the Regional Director at any time.

(4) A vessel issued a limited access combination permit or an Individual DAS permit or a vessel applicant who elects to use a VTS unit, is required to submit a copy of the vendor installation receipt from a NMFS-certified VTS vendor as described in § 651.28(a).

* * * * *

(h) * * *

(1) * * *

(ii) The application was not received by the Regional Director by the deadlines set forth in paragraphs (b)(1)(ii), and (q) of this section; or

(iii) The applicant and applicant's vessel failed to meet all eligibility requirements described in paragraph (b)(1) of this section; or

* * * * *

(q) *Limited access multispecies permit renewal.* To renew or apply for a limited access multispecies permit a completed application must be received by the Regional Director by the first day of the fishing year for which the permit is required. Failure to renew a limited access multispecies permit in any year bars the renewal of the permit in subsequent years.

* * * * *

4. Section 651.9 is revised to read as follows:

§ 651.9 Prohibitions.

(a) In addition to the general prohibitions specified in § 620.7 of this chapter, it is unlawful for any person owning or operating a vessel issued a valid Federal multispecies vessel permit under this part, a permit under § 651.5 or a letter under § 651.4(b)(7)(v), to do any of the following:

(1) Fail to report to the Regional Director within 15 days any change in the information contained in the permit application as required under § 651.4(m) or § 651.5(k).

(2) Fish for, possess, or land multispecies finfish unless the operator of the vessel has been issued an operator's permit under § 651.5, and a valid permit is on board the vessel.

(3) Sell, barter, trade, or transfer, or attempt to sell, barter, trade, or

otherwise transfer, for a commercial purpose, other than transport, any multispecies, unless the dealer or transferee has a dealer permit issued under § 651.6.

(4) Fail to comply in an accurate and timely fashion with the log report, reporting, record retention, inspection, and other requirements of § 651.7(b).

(5) Fail to affix and maintain permanent markings as required by § 651.8.

(6) Enter, fail to remove gear from, or be in the areas described in § 651.21(f)(1) through § 651.21(h)(1) during the time period specified, except as provided in § 651.21(d), (f)(2), (g)(2), and (h)(2).

(7) Possess or land multispecies finfish smaller than the minimum sizes specified in § 651.23 or § 651.34, as appropriate.

(8) Land, or possess on board a vessel, more than the possession limits specified in § 651.27(a), or violate any of the other provisions of § 651.27.

(9) Land, offload, remove, or otherwise transfer, or attempt to land, offload, remove, or otherwise transfer fish from one vessel to another vessel or other floating conveyance unless authorized in writing by the Regional Director pursuant to § 651.30(a).

(10) Refuse or fail to carry an observer if requested to do so by the Regional Director.

(11) Interfere with or bar by command, impediment, threat, coercion, or refusal of reasonable assistance, an observer conducting his or her duties aboard a vessel.

(12) Fail to provide an observer with the required food, accommodations, access, and assistance, specified in § 651.31.

(b) In addition to the prohibitions specified in paragraph (a) of this section, it is unlawful for any person owning or operating a vessel issued a valid limited access multispecies permit under § 651.4(b) or a letter under § 651.4(b)(7)(v), to do any of the following:

(1) Fish for, possess, or land multispecies finfish with or from a vessel that has had the horsepower of such vessel or its replacement upgraded or increased in excess of the limitations specified in § 651.4(b)(4) or (b)(5).

(2) Fish for, possess, or land multispecies finfish with or from a vessel that has had the length, gross registered tonnage, or net tonnage of such vessel or its replacement increased or upgraded in excess of limitations specified in § 651.4(b)(4) or (b)(5).

(3) Combine, transfer, or consolidate DAS allocations.

(4) Fish for, possess at any time during a trip, or land per trip more than the possession limit of regulated species specified in § 651.27(b) after using up the vessel's annual DAS allocation or when not participating under the DAS program pursuant to § 651.22, unless otherwise exempted under § 651.22(b)(3) or § 651.34.

(5) Possess or land per trip more than the possession limit specified under § 651.22(b)(3)(i) if the vessel has been issued a limited access Small Vessel permit.

(6) Fail to comply with the restrictions on fishing and gear specified in § 651.22(b)(4) if the vessel has been issued a limited access Hook-Gear permit.

(7) Fail to declare and be out of the multispecies fishery as required by § 651.22(g), using the procedure described under § 651.22(h), as applicable.

(8) If required to have a VTS unit specified in § 651.28(a) or § 651.29(a):

(i) Fail to have a certified, operational, and functioning VTS unit that meets the specifications of § 651.28(a) on board the vessel at all times.

(ii) Fail to comply with the notification, replacement, or any other requirements regarding VTS usage specified in § 651.29(a).

(9) Fail to comply with any requirement regarding the DAS notification specified in § 651.29(a) or (b).

(10) Fail to comply with other notification requirements, including a call-in system specified in § 651.29(c), if required by the Regional Director.

(11) Fail to provide notification of the beginning or ending of a trip, as required under § 651.29(b) and (d).

(c) In addition to the prohibitions specified in paragraph (a) of this section, it is unlawful for any person owning or operating a vessel issued a Handgear permit under § 651.4(c) to do any of the following:

(1) Possess at any time during a trip, or land per trip, more than the possession limit of regulated species specified in § 651.33(a), unless the regulated species were harvested by a charter or party vessel.

(2) Use, or possess on board, gear capable of harvesting multispecies finfish other than rod and reel or handline while in possession of, or fishing for, multispecies finfish.

(3) Possess or land multispecies finfish during the time period specified in § 651.33(a)(2).

(4) Violate any of the provisions of § 651.33(a).

(d) In addition to the prohibitions specified in paragraph (a) of this section, it is unlawful for any person owning or operating a vessel issued a Scallop Multispecies Possession Limit permit under § 651.4(c) to do any of the following:

(1) Possess or land more than the possession limit of regulated species specified in § 651.33(c).

(2) Possess or land regulated species when not fishing under a scallop DAS.

(3) Violate any of the provisions of § 651.33(c).

(e) In addition to the general prohibitions specified in § 620.7 of this chapter and the prohibitions specified in paragraphs (a) through (d) of this section, it is unlawful for any person to do any of the following:

(1) Fish for, possess, or land multispecies finfish unless:

(i) The multispecies finfish were being fished for or harvested by a vessel issued a valid Federal multispecies permit under this part, or a letter under § 651.4(b)(7)(v), and the operator aboard such vessel was issued an operator's permit under § 651.5 and a valid permit is on board the vessel;

(ii) The multispecies finfish were harvested by a vessel not issued a Federal multispecies permit that fishes for and possesses multispecies finfish exclusively in state waters; or

(iii) The multispecies finfish were harvested by a recreational fishing vessel.

(2) Sell, barter, trade, or otherwise transfer, or attempt to sell, barter, trade, or otherwise transfer, for a commercial purpose, any multispecies finfish from a trip unless the vessel is issued a valid Federal multispecies permit under this part, or a letter under § 651.4(b)(7)(v), and is not fishing under the charter/party restrictions specified in § 651.34(d), or unless the multispecies finfish were harvested by a vessel that qualifies for the exception specified in paragraph (e)(1)(ii) of this section.

(3) To be or act as an operator of a vessel fishing for or possessing multispecies finfish in or from the EEZ, or issued a Federal multispecies permit under this part, without having been issued and possessing a valid operator's permit issued under § 651.5.

(4) Purchase, possess, or receive for a commercial purpose, or attempt to purchase, possess, or receive for a commercial purpose in the capacity of a dealer, multispecies finfish taken from a fishing vessel, unless in possession of a valid dealer permit issued under § 651.6; except that this prohibition does not apply to multispecies finfish taken from a vessel that qualifies for the exception specified in paragraph (e)(1)(ii) of this section.

(5) Purchase, possess, or receive for a commercial purpose or attempt to purchase, possess, or receive multispecies finfish caught by a vessel other than one issued a valid Federal multispecies permit under this part, or a letter under § 651.4(b)(7)(v), unless the multispecies finfish were harvested by a vessel that qualifies for the exception specified in paragraph (e)(1)(ii) of this section.

(6) Land, offload, cause to be offloaded, sell, or transfer; or attempt to land, offload, cause to be offloaded, sell, or transfer multispecies finfish from a fishing vessel, whether on land or at sea, as an owner or operator without accurately preparing and submitting, in a timely fashion, the documents required by § 651.7, unless the multispecies finfish were harvested by a vessel that qualifies for the exception specified in paragraph (e)(1)(ii) of this section.

(7) Purchase or receive multispecies finfish, or attempt to purchase or receive multispecies finfish, whether on land or at sea, as a dealer without accurately preparing, submitting in a timely fashion, and retaining the documents required by § 651.7.

(8) Possess or land fish caught with nets of mesh smaller than the minimum size specified in § 651.20 of this chapter, or with scallop dredge gear, unless said fish are caught, possessed or landed in accordance with § 651.20, or unless the vessel qualifies for the exception specified in paragraph (e)(1)(ii) of this section.

(9) Fish with, use, or have on board, within the area described in § 651.20(a)(1) nets of mesh size smaller than the minimum mesh size specified in § 651.20(a)(2), except as provided in § 651.20 (a)(3) through (a)(6), (a)(8), (a)(9), (e), (f), and (j), or unless the vessel qualifies for the exception specified in paragraph (e)(1)(ii) of this section.

(10) Fish for, harvest, possess, or land in or from the EEZ northern shrimp, unless such shrimp were fished for or harvested by a vessel meeting the requirements specified in § 651.20(a)(3).

(11) Fish within the areas described in § 651.20(a)(4) with nets of mesh smaller than the minimum size specified in § 651.20(a)(2), unless the vessel is issued and possesses on board the vessel an authorizing letter issued under § 651.20(a)(4)(i).

(12) Violate any provisions of the Cultivator Shoals Whiting Fishery specified in § 651.20(a)(4).

(13) Fail to comply with the gear restrictions for the Stellwagen Bank/Jeffrey's Ledge juvenile protection areas specified in § 651.20(a)(5).

(14) Fail to comply with the gear restrictions and time periods specified for Small Mesh Area 1 and Small Mesh Area 2 in § 651.20(a)(8).

(15) Fail to comply with the requirements of the Nantucket Shoals dogfish exemption specified in § 651.20(a)(9).

(16) Fish with, use, or have available for immediate use within the area described in § 651.20(c)(1) nets of mesh size smaller than the minimum size specified in § 651.20(c)(2), except as provided in § 651.20(c)(3), (e), (f), and (j), or unless the vessel qualifies for the exception specified in paragraph (e)(1)(ii) of this section.

(17) Fish with, use, or have available for immediate use within the area described in § 651.20(d)(1) nets of mesh size smaller than the minimum size specified in § 651.20(d)(2), except as provided in § 651.20 (e), (f), and (j), or unless the vessel qualifies for the exception specified in paragraph (e)(1)(ii) of this section.

(18) Fish for the species specified in § 651.20 (e) or (f) with a net of mesh size smaller than the applicable mesh size specified in § 651.20(a)(2), (c)(2) or (d)(2), or possess or land such species, unless the vessel is in compliance with the requirements specified in § 651.20(e) or (f), or unless the vessel qualifies for the exception specified in paragraph (e)(1)(ii) of this section.

(19) Obstruct or constrict a net as described in § 651.20 (h)(1) and (h)(2).

(20) Fish for, land, or possess multispecies finfish harvested by means of pair trawling or with pair trawl gear, except under the provisions of § 651.20(e), or unless the vessels that engaged in pair trawling qualify for the exception specified in paragraph (e)(1)(ii) of this section.

(21) Violate any of the restrictions on fishing with scallop dredge gear specified in § 651.20(i), or any of the other provisions of § 651.20(i).

(22) Violate any of the provisions of the state waters winder flounder exemption program specified in § 651.20(j).

(23) Enter or be in the area described in § 651.21(a)(1) on a fishing vessel, except as provided in § 651.21(a)(2) and (d).

(24) Enter or be in the area described in § 651.21(b)(1) on a fishing vessel, except as provided in § 651.21(b)(2).

(25) Enter or be in the area described in § 651.21(c)(1), on a fishing vessel, except as provided in § 651.21(c)(2) and (d).

(26) Enter or be on a fishing vessel, or fail to remove gear from the EEZ portion of the areas described in § 651.21(f)(1) through § 651.21(h)(1), during the time period specified, except as provided in § 651.21(d), (f)(2), (g)(2), and (h)(2).

(27) Import, export, transfer, land, buy, sell or possess regulated species smaller than the minimum sizes specified in § 651.23, or attempt to do any of the same, unless the regulated species were harvested from a vessel that qualifies for the exception specified in paragraph (e)(1)(ii) of this section.

(28) Violate any terms of a letter authorizing experimental fishing pursuant to § 651.24 or fail to keep such letter on board the vessel during the period of the experiment.

(29) Fail to comply with the gear-marking requirements of § 651.25.

(30) Purchase, possess, or receive as a dealer, or in the capacity of a dealer, fish in excess of the possession limits specified for vessels issued a Federal multispecies permit.

(31) Tamper with, damage, destroy, alter, or in any way distort, render useless, inoperative, ineffective, or inaccurate the VTS, VTS unit, or VTS signal required to be installed on or transmitted by vessel owners or operators required to use a VTS by this part.

(32) Violate any provision of the DAS notification program as specified by § 651.29.

(33) Land, offload, remove, or otherwise transfer, or attempt to land, offload, remove or otherwise transfer multispecies finfish from one vessel to another vessel, unless both vessels qualify under the exception specified in paragraph (e)(1)(ii) of this section, or unless authorized in writing by the Regional Director pursuant to § 651.30(a).

(34) Assault, resist, oppose, impede, harass, intimidate, or interfere with a NMFS-approved observer aboard a vessel.

(35) Make any false statement, oral or written, to an authorized officer or employee of NMFS, concerning the taking, catching, harvesting, landing, purchase, sale, or transfer of any multispecies finfish.

(36) Make any false statement in connection with an application under § 651.4 or § 651.5 or on any report required to be submitted or maintained under § 651.7.

(37) Interfere with, obstruct, delay, or prevent by any means a lawful investigation or search relating to the enforcement of this part.

(38) Fail to have on board the vessel at least one standard tote as specified under § 651.20(i) and (j), § 651.27, and § 651.33(a) and (c).

(f) In addition to the general prohibitions specified in § 620.7 of this chapter and the prohibitions specified

in paragraphs (a) through (e) of this section, it is unlawful for the owner or operator of a charter or party boat issued a permit under § 651.4, or of a recreational vessel, as applicable, to:

(1) Fish with gear in violation of the restrictions specified in § 651.34(a).

(2) Possess regulated species smaller than the minimum sizes specified in § 651.34(b).

(3) Possess cod and haddock in excess of the possession limits specified in § 651.34(c).

(4) Sell, trade, barter, or otherwise transfer, or attempt to sell, trade, barter or otherwise transfer, multispecies finfish for a commercial purpose as specified in § 651.34(d).

(g) It is unlawful to violate any other provision of this part, the Magnuson Act, or any regulation, permit or other authorization issued under the Magnuson Act.

(h) Presumption. The possession for sale of regulated species that do not meet the minimum sizes as specified in § 651.23 will be prima facie evidence that such regulated species were taken or imported in violation of these regulations. Evidence that such fish were harvested by a vessel not issued a permit under this part and fishing exclusively within state waters will be sufficient to rebut the presumption. This presumption does not apply to fish being sorted on deck.

5. Section 651.10 is revised to read as follows:

§ 651.10 Facilitation of enforcement.

(a) *Radio hails.* Permit holders, while underway, must be alert for communications conveying enforcement instructions and immediately answer via VHF-FM radio, channel 16, when hailed by an authorized officer. Vessels not required to have VHF-FM radios by the Coast Guard are exempt from this requirement.

(b) Also see § 620.8 of this chapter.

6. In § 651.20, paragraph (a)(9) is added and paragraphs (a)(2), (a)(3)(i)(B), (a)(4)(i)(E), (a)(5), (a)(6)(iii)(C), (a)(7), paragraph (a)(8) introductory text preceding the table, paragraphs (a)(8)(i), (a)(8)(iii)(B), (c)(1), (c)(2), (c)(3)(ii), (c)(5), (d), (e)(2), (f)(2), (g)(1), (g)(2), (i), (j) introductory text, and (j)(7) are revised to read as follows:

§ 651.20 Regulated mesh areas and restrictions on gear and methods of fishing.

* * * * *

(a) * * *

(2) *Gear restrictions.* (i) Except as provided in paragraphs (a)(2)(iii) and (j) of this section, and unless otherwise restricted under paragraphs (a)(2)(ii) and (a)(5) of this section, the minimum mesh size for any trawl net, sink gillnet, Scottish seine, mid-water trawl, or purse seine, on a vessel, or used by a vessel fishing under a DAS in the multispecies DAS program in the GOM/GB regulated mesh area, shall be 6 inches (15.24 cm) square or diamond mesh throughout the entire net. This restriction does not apply to nets or pieces of nets smaller than 3 ft (0.9 m) x 3 ft (0.9 m), (9 sq. ft (0.81 m^2)), or to vessels that have not been issued a Federal multispecies permit under § 651.4 and that are fishing exclusively in state waters.

(ii) *Large Mesh vessels.* When fishing in the GOM/GB regulated mesh area, the minimum mesh size for any sink gillnet on a vessel, or used by a vessel, fishing under a DAS in the Large Mesh DAS programs specified in § 651.22(b)(6) and (7) shall be 7 inch (17.78-cm) diamond mesh throughout the entire net. The minimum mesh size for any trawl net on a vessel, or used by a vessel, fishing under a DAS in the Large Mesh DAS program shall be 8-inch (20.32-cm) diamond mesh throughout the entire net. This restriction does not apply to nets or pieces of nets smaller than 3 ft (0.9 m) x 3 ft (0.9 m), (9 sq. ft (0.81 m^2)), or to vessels that have not been issued a Federal multispecies permit under § 651.4 and that are fishing exclusively in state waters.

(iii) *Other gear and mesh exemptions.* The minimum mesh size for any trawl net, sink gillnet, Scottish seine, mid-water trawl, or purse seine, on a vessel, or used by a vessel, when not fishing under the multispecies DAS program and when fishing in the GOM/GB regulated mesh area, is provided for under the exemptions specified in paragraphs (a)(3), (a)(4), (a)(6), (a)(8), (a)(9), (e), (f), (i), and (j) of this section. Vessels that are not fishing in one of these exemption programs, or with exempted gear (as defined under this part), or under the Scallop state waters exemption program specified in § 650.27 of this chapter, or under a multispecies DAS are prohibited from fishing in the GOM/GB regulated mesh area.

(3) * * *

(i) * * *

(B) The following may be retained, with the restrictions noted, as allowable bycatch species in the northern shrimp fishery as described in this section: Longhorn sculpin; up to two standard totes of silver hake (whiting); monkfish and monkfish parts up to 10 percent by weight of all other species on board; and American lobster up to 10 percent by weight of all other species on board or 200 lobsters, whichever is less.

* * * * *

(4) * * *

(i) * * *

(E) The following may be retained, with the restrictions noted, as allowable bycatch species in the Cultivator Shoal whiting fishery exemption area as described in this section: Longhorn sculpin; monkfish and monkfish parts up to 10 percent by weight of all other species on board; and American lobster up to 10 percent by weight of all other species on board or 200 lobsters, whichever is less.

* * * * *

(5) *Stellwagen Bank/Jeffreys Ledge (SB/JL) juvenile protection area.* Except as provided in paragraphs (a)(3), (a)(6), (e), (f), and (j) of this section, unless otherwise restricted in paragraph (a)(2)(ii) of this section, the minimum mesh size for any trawl net, Scottish seine, purse seine, or midwater trawl in use, or available for immediate use as described under paragraph (c)(4) of this section, by a vessel fishing in the following area shall be 6 inches (15.24 cm) square mesh in the last 50 bars of the codend and extension piece for vessels 45 ft (13.7 m) in length and less, and in the last 100 bars of the codend and extension piece for vessels greater than 45 ft (13.7 cm) in length.

(6) * * *

(iii) * * *

(C) Vessels may not fish for, possess on board, or land any species of fish except when fishing in the areas specified in paragraphs (a)(4), (a)(9), (c), and (d) of this section. Vessels may retain exempted small mesh species as provided in paragraphs (a)(4)(i), (a)(9)(i), (c)(3), and (d)(3) of this section.

(7) *Addition or deletion of exemptions.* (i) An exemption may be added in an existing fishery for which there is sufficient data or information to ascertain the amount of regulated species bycatch, if the Regional Director, after consultation with the Council, determines that the percentage of regulated species caught as bycatch is, or can be reduced to, less than 5 percent by weight of total catch and that such exemption will not jeopardize fishing mortality objectives. In determining whether exempting a fishery may jeopardize meeting fishing mortality objectives, the Regional Director may take into consideration factors such as, but not limited to, juvenile mortality. A fishery can be defined, restricted or allowed by area, gear, season, or other means determined to be appropriate to reduce bycatch of regulated species. An existing exemption may be deleted or modified if the Regional Director determines that the catch of regulated species is equal to or greater than 5

percent by weight of total catch, or that continuing the exemption may jeopardize meeting fishing mortality objectives. Notification of additions, deletions or modifications will be made through publication of a rule in the Federal Register.

(ii) The Council may recommend to the Regional Director, through the framework procedure specified in § 651.40(b), additions or deletions to exemptions for fisheries either existing or proposed for which there may be insufficient data or information for the Regional Director to determine, without public comment, percentage catch of regulated species.

(iii) The Regional Director may, using the process described in either paragraphs (a)(7)(i) or (ii) of this section, authorize an exemption to fish for, possess and land white hake by vessels using regulated mesh or hook gear. Determination of the percentage of regulated species caught in such fishery shall not include white hake.

(iv) Exempted fisheries authorized under this paragraph are subject, at minimum, to the following restrictions:

(A) With the exception of fisheries authorized under paragraph (a)(7)(iii) of this section, possession of regulated species will be prohibited.

(B) Possession of monkfish or monkfish parts will be limited to 10 percent by weight of all other species on board.

(C) Possession of lobsters will be limited to 10 percent by weight of all other species on board or 200 lobsters, whichever is less.

(D) Possession of skate or skate parts in the SNE regulated mesh area will be limited to 10 percent by weight of all other species on board.

(8) *Small Mesh Area 1/Small Mesh Area 2.* Fisheries using nets of mesh smaller than the minimum size specified in paragraph (a)(2) of this section in subareas described as Small Mesh Area 1 and Small Mesh Area 2 of the Small Mesh Exemption Area as specified under paragraph (a)(3) of this section, and defined in this paragraph (a)(8), have been found to meet the exemption qualification requirements specified in paragraph (a)(7) of this section. Therefore, vessels subject to the mesh restrictions specified in paragraph (a)(2) of this section may fish with or possess nets of mesh smaller than the minimum size specified in paragraph (a)(2) of this section in these areas, if the vessel complies with the restrictions specified in paragraphs (a)(8)(i) through (iii) of this section. These subareas are defined by straight lines connecting the following points in the order stated (see Figure 4 to part 651):

* * * * *

(i) The fishing season is from July 15 through October 31 when fishing under the exemption in Small Mesh Area 1.

* * * * *

(iii) * * *

(B) *Allowable bycatch.* Vessels fishing for the exempted species identified in paragraph (a)(8)(iii)(A) of this section may also possess and land the following species, with the restrictions noted, as allowable bycatch species: Longhorn sculpin; monkfish and monkfish parts up to 10 percent by weight of all other species on board; and American lobster up to 10 percent by weight of all other species on board or 200 lobsters, whichever is less.

(9) *Nantucket Shoals dogfish fishery exemption area.* The Nantucket Shoals dogfish fishery as defined in this part has been found to meet the exemption qualification requirements specified in paragraph (a)(7) of this section. Therefore, vessels subject to the mesh restrictions specified in paragraph (a)(2) of this section may fish with, use, or possess nets of mesh smaller than the minimum size specified in paragraph (a)(2) of this section in the Nantucket Shoals dogfish fishery exemption area, if the vessel complies with the requirements specified in paragraph (a)(9)(i) of this section. The Nantucket Shoals dogfish fishery exemption area is defined by straight lines connecting the following points in the order stated (see Figure 4 to part 651):

NANTUCKET SHOALS DOGFISH EXEMPTION AREA

Point	Latitude	Longitude
NS1	41°45′ N	70°00′ W.
NS2	41°45′ N.	69°20′ W.
NS3	41°30′ N.	69°20′ W.
Cl1	41°30′ N.	69°23′ W.
NS5	41°26.5′ N.	69°20′ W.
NS6	40°50′ W.	69°20′ N.
NS7	40°50′ W.	70°00′ N.
NS1	41°45′ N	70°00′ W.

(i) *Requirements.* Vessels authorized to fish in this fishery must have on board an authorizing letter issued by the Regional Director. Vessels are subject to the following conditions:

(A) Authorized vessels may not fish for, possess on board or land any species of fish other than dogfish except as provided under paragraph (a)(9)(i)(D) of this section.

(B) Authorized vessels may fish under this exemption during the season of June 1 through October 15.

(C) When transiting the GOM/GB regulated mesh area as specified under paragraph (a)(1) of this section, any nets of mesh smaller than the regulated mesh size specified in paragraph (a)(2) of this section, must be stowed according to the provisions of paragraph (c)(4) of this section.

(D) The following may be retained, with the restrictions noted, as allowable bycatch species in the Nantucket Shoals dogfish fishery exemption area as described in this section: Longhorn sculpin, up to two standard totes of silver hake (whiting); monkfish and monkfish parts up to 10 percent by weight of all other species on board; American lobster up to 10 percent by weight of all other species on board or 200 lobsters, whichever is less; and skate or skate parts up to 10 percent by weight of all other species on board.

(E) Authorized vessels must comply with any additional gear restrictions specified in the authorization letter issued by the Regional Director.

(ii) *Sea Sampling.* The Regional Director may conduct periodic sea sampling to determine if there is a need to change the area or season designation, and to evaluate the bycatch of regulated species.

* * * * *

(c) *Southern New England regulated mesh area.* (1) *Area definition.* The Southern New England regulated mesh area is that area bounded on the east by straight lines connecting the following points in the order stated (see Figure 1 part 651):

SOUTHERN NEW ENGLAND REGULATED MESH AREA

Point	Latitude	Longitude
G5	41°18.6′ N.	66°24.8′ W.
G6	40°55.5′ N.	66°38′ W.
G7	40°45.5′ N.	68°00′ W.
G8	40°37′ N.	68°00′ W.
G9	40°30.5′ N.	69°00′ W.
NL3	40°.7′ N.	69°00′ W.
NL2	40°18.7′ N.	69°40′ W.
NL1	40°50′ N.	69°40′ W.
G11	40°50′ N.	70°00′ W.
G12		70°00′ W.[1]

[1] Northward to its intersection with the shoreline of mainland Massachusetts; and on the west by the eastern boundary of the Mid-Atlantic regulated mesh area.

(2) *Gear restrictions.* (i) *Minimum mesh restrictions.* Except as provided in paragraphs (c)(2) (iii) and (j) of this section, and unless otherwise restricted under paragraph (c)(2)(ii) of this section, the minimum mesh size for any trawl net, sink gillnet, Scottish seine, purse seine or mid-water trawl, in use, or available for immediate use as described under paragraph (c)(4) of this section, by a vessel fishing under a DAS in the

multispecies DAS program in the Southern New England (SNE) regulated mesh area, shall be 6 inches (15.24 cm) square or diamond mesh throughout the entire net. This restriction does not apply to vessels that have not been issued a Federal multispecies permit under § 651.4 and that are fishing exclusively in state waters.

(ii) *Large Mesh vessels.* When fishing in the SNE regulated mesh area, the minimum mesh size for any sink gillnet on a vessel, or used by a vessel, fishing under a DAS in the Large Mesh DAS program specified in § 651.22(b)(6) and (7) shall be 7 inch (17.78-cm) diamond mesh throughout the entire net. The minimum mesh size for any trawl net on a vessel, or used by a vessel, fishing under a DAS in the Large Mesh DAS program shall be 8 inch (20.32-cm) diamond mesh throughout the entire net. This restriction does not apply to nets or pieces of nets smaller than 3 ft (0.9 m)×3 ft (0.9 m), (9 sq. ft (0.81 m^2)), or to vessels that have not been issued a Federal multispecies permit under § 651.4 and that are fishing exclusively in state waters.

(iii) *Other gear and mesh exemptions.* The minimum mesh size for any trawl net, sink gillnet, Scottish seine, mid-water trawl, or purse seine, in use, or available for immediate use as described under paragraph (c)(4) of this section, by a vessel when not fishing under the multispecies DAS program and when fishing in the SNE regulated mesh area, is provided for under the exemptions specified in paragraphs (c)(3), (e), (f), (i), and (j) of this section. Vessels that are not fishing in one of these exemption programs, with exempted gear (as defined under this part), or under the Scallop state waters exemption program specified in § 650.27 of this chapter, or under a multispecies DAS are prohibited from fishing in the SNE regulated mesh area.

(3) * * *

(ii) *Possession and net stowage requirements.* Vessels may possess regulated species while in possession of nets with mesh smaller than the minimum size specified in paragraph (c)(2)(i) of this section, provided that the nets are stowed and are not available for immediate use in accordance with paragraph (c)(4) of this section, and provided that regulated species were not harvested by nets of mesh size smaller than the minimum mesh size specified in paragraph (c)(2)(i) of this section. Vessels fishing for the exempted species identified in paragraph (c)(3)(i) of this section may also possess and retain the following species, with the restrictions noted, as incidental take to these exempted fisheries: Conger eels; searobins; black sea bass; red hake; tautog (blackfish); blowfish (puffer); cunner; John Dory; mullet; bluefish; tilefish; longhorn sculpin; fourspot flounder; alewife; hickory shad; American shad; blueback herring; sea ravens; Atlantic croaker; spot; swordfish; monkfish and monkfish parts up to 10 percent by weight of all other species on board; American lobster up to 10 percent by weight of all other species on board or 200 lobsters, whichever is less; and skate and skate parts up to 10 percent by weight of all other species on board.

* * * * *

(5) *Addition or deletion of exemptions.* An exemption may be added, deleted or modified pursuant to the procedure described in paragraph (a)(7) of this section.

(d) *Mid-Atlantic regulated mesh area.* (1) *Area definition.* The Mid-Atlantic (RMA) regulated mesh area is that area bounded on the east by a line running from the Rhode Island shoreline at 41°18.2′ N. and 71°51.5′ W. (Watch Hill, RI) southwesterly through Fishers Island, NY, to Race Point, Fishers Island, NY, and from Race Point, Fishers Island, NY, southeasterly to the intersection of the 3 nautical mile line east of Montauk Point, southwesterly along the 3 nautical mile line to the intersection of 72°30 W. Longitude and south along that line to the intersection of the outer boundary of the EEZ. (see Figure 1 to part 651).

(2) *Gear restrictions.* (i) *Mesh size restrictions.* Except as provided in paragraph (j) of this section, and unless otherwise restricted under paragraph (d)(2)(ii) of this section, the minimum mesh size for any trawl net, sink gillnet, Scottish seine, purse seine or mid-water trawl, in use, or available for immediate use as described under paragraph (c)(4) of this section, by a vessel fishing under a DAS in the multispecies DAS program in the MA regulated mesh area shall be that specified in the summer flounder regulations at § 625.24(a) of this chapter. This restriction does not apply to vessels that have not been issued a Federal multispecies permit under § 651.4 and that are fishing exclusively in state waters.

(ii) *Large mesh vessels.* When fishing in the MA regulated mesh area, the minimum mesh size for any sink gillnet on a vessel, or used by a vessel, fishing under a DAS in the Large Mesh DAS program specified in § 651.22(b)(6) and (b)(7) shall be 7 inch (17.78 cm) diamond mesh throughout the entire net. The minimum mesh size for any trawl net on a vessel, or used by a vessel, fishing under a DAS in the Large Mesh DAS program shall be 8 inch (20.32 cm) diamond mesh throughout the net. This restriction does not apply to nets or pieces of nets smaller than 3 ft (0.9 m) x 3 ft (0.9 m), (9 sq. ft (0.81 m^2)), or to vessels that have not been issued a Federal multispecies permit under § 651.4 and that are fishing exclusively in state waters.

(iii) *Net stowage exemption.* Vessels may possess regulated species while in possession of nets with mesh smaller than the minimum size specified in paragraph (d)(2)(i) of this section, provided that the nets are stowed and are not available for immediate use in accordance with paragraph (c)(4) of this section, and provided that regulated species were not harvested by nets of mesh size smaller than the minimum mesh size specified in paragraph (d)(2)(i) of this section.

(3) *Additional Exemptions.* The Regional Director may, using the process described in either (a)(7)(i) or (a)(7)(ii), authorize an exemption to fish for, possess, or land white hake by vessels using regulated mesh or hook gear. Determination of the percentage of regulated species caught in such a fishery shall not include white hake.

(e) * * *

(2) When fishing under this exemption in the GOM/GB Regulated Mesh Area vessels must have on board an authorizing letter issued by the Regional Director;

* * * * *

(f) * * *

(2) When fishing under this exemption in the GOM/GB Regulated Mesh Area vessels must have on board an authorizing letter issued by the Regional Director;

* * * * *

(g) *Mesh measurements*—(1) *Gillnets.* Beginning October 15, 1996, mesh size of gillnet gear shall be measured by lining up 5 consecutive knots perpendicular to the float line and, with a ruler or tape measure, measuring 10 consecutive stretched meshes on the diamond, inside knot to inside knot. The mesh size shall be the average of the measurements of the 10 consecutive meshes.

(2) *All other nets.* With the exception of gillnets, mesh size shall be measured by a wedge-shaped gauge having a taper of 2 cm in 8 cm and a thickness of 2.3 mm, inserted into the meshes under a pressure or pull of 5 kg.

(i) *Square-mesh measurement.* Square mesh in the regulated portion of the net shall be measured by placing the net gauge along the diagonal line that connects the largest opening between opposite corners of the square. The

square mesh size shall be the average of the measurements of 20 consecutive adjacent meshes from the terminus forward along the long axis of the net. The square mesh shall be measured at least five meshes away from the lacings of the net.

(ii) *Diamond-mesh measurement.* Diamond mesh in the regulated portion of the net shall be measured running parallel to the long axis of the net. The mesh size shall be the average of the measurements of any series of 20 consecutive meshes. The mesh shall be measured at least five meshes away from the lacings of the net.

* * * * *

(i) *Scallop vessels.* (1) Except as provided in paragraph (i)(2) of this section, scallop vessels that possess a valid limited access permit under § 650.4 of this chapter, and that a scallop multispecies possession limit permit under § 650.4(c), and that are fishing under the scallop DAS program described in § 650.24, may possess and land up to 300 lb (136.1 kg) of regulated species, unless otherwise restricted pursuant to § 651.27(a)(2). Vessels subject to this possession limit shall have at least one standard tote on board.

(2) Combination vessels, and scallop vessels not equipped with or fishing with dredge gear, fishing lawfully under a multispecies DAS are subject to the gear restrictions specified in § 651.20 and may possess and land unlimited amounts of regulated species. Such vessels may simultaneously fish under a scallop DAS.

(j) *State waters winter flounder exemption.* Any vessel issued a Federal limited access multispecies permit under this part may fish for, possess, or land winter flounder while fishing with nets of mesh smaller than the minimum size specified in paragraphs (a)(2), (c)(2), and (d)(2) of this section provided that:

* * * * *

(7) The vessel, when not fishing under the DAS program, does not fish for, possess, or land more than 500 lb (226.8 kg) of winter flounder and, when subject to this possession limit, has at least one standard tote on board;

* * * * *

7. In § 651.21, paragraphs (a)(2)(i), (b)(2)(i), (c)(2)(i), (d) and (e) introductory text are revised, and paragraphs (f), (g), and (h) are added to read as follows:

§ 651.21 Closed areas.

(a) * * *

(2) * * *

(i) Fishing with or using pot gear designed or used to take lobsters, or pot gear designed or used to take hagfish, and that have no other gear on board capable of catching multispecies finfish; and

* * * * *

(b) * * *

(2) * * *

(i) Fishing with or using pot gear designed or used to take lobsters, or pot gear designed or used to take hagfish, and that have no other gear on board capable of catching multispecies finfish;

* * * * *

(c) * * *

(2) * * *

(i) Fishing with or using pot gear designed and used to take lobsters, or pot gear designed and used to take hagfish, and that have no other gear on board capable of catching multispecies finfish;

* * * * *

(d) *Transiting.* Vessels may transit Closed Area I, the Nantucket Lightship Closed Area, the Northeast Closure Area, the Mid-coast Closure Area, and the Massachusetts Bay Closure Area, as defined in paragraphs (a)(1), (c)(1), (f)(1), (g)(1), and (h)(1), respectively, of this section, provided that their gear is stowed in accordance with the provisions of paragraph (e) of this section.

(e) *Gear stowage requirements.* Vessels transiting the closed areas must stow their gear as follows:

* * * * *

(f) *Northeast Closure Area.* (1) During the period August 15 through September 13, no fishing vessel or person on a fishing vessel may enter, fish, or be, and no fishing gear capable of catching multispecies finfish, unless otherwise allowed in this part may be, in the area known as the Northeast Closure Area (Figure 3 to part 651), as defined by straight lines connecting the following points in the order stated, except as specified in paragraphs (d) and (f)(2) of this section:

Point	Latitude	Longitude
NE1	Maine shoreline	68°55.0′ W.
NE2	43°29.6′ N	68°55.0′ W.
NE3	44°04.4′ N	67°48.7′ W.
NE4	44°06.9′ N	67°52.8′ W.
NE5	44°31.2′ N	67°02.7′ W.
NE6	Maine shoreline	67°02.7′ W.

(2) *Exceptions.* Paragraph (f)(1) of this section does not apply to persons on fishing vessels or fishing vessels:

(i) That have not been issued a Federal multispecies permit under § 651.4 and that are fishing exclusively in state waters.

(ii) Fishing with or using exempted gear as defined under this part, excluding mid-water trawl gear, provided that there is no other gear on board capable of catching multispecies finfish. (iii) Classified as charter, party, or recreational.

(g) *Mid-coast Closure Area.* (1) During the period November 1 through December 31, no fishing vessel or person on a fishing vessel may enter, fish, or be, and no fishing gear capable of catching multispecies finfish unless otherwise allowed in this part may be, in the area known as the Mid-coast Closure Area (Figure 3 to part 651), as defined by straight lines connecting the following points in the order stated, except as specified in paragraphs (d) and (g)(2) of this section:

Point	Latitude	Longitude
MC1	42°30′ N.	Massachusetts shoreline.
MC2	42°30′ N.	70°15′ W.
MC3	42°40′ N.	70°15′ W.
MC4	42°40′ N.	70°00′ W.
MC5	43°00′ N.	70°00′ W.
MC6	43°00′ N.	69°30′ W.
MC7	43°15′ N.	69°30′ W.
MC8	43°15′ N.	69°00′ W.
MC9	Maine shoreline	69°00′ W.

(2) *Exceptions.* Paragraph (g)(1) of this section does not apply to persons on fishing vessels or fishing vessels:

(i) That have not been issued a Federal multispecies permit under § 651.4 and that are fishing exclusively in state waters.

(ii) Fishing with or using exempted gear as defined under this part, excluding mid-water trawl gear, provided that there is no other gear on board capable of catching multispecies finfish. (iii) Classified as charter, party, or recreational.

(h) *Massachusetts Bay Closure Area.* (1) During the period March 1 through March 30, no fishing vessel or person on a fishing vessel may enter, fish, or be, and no fishing gear capable of catching multispecies finfish, unless otherwise allowed in this part may be, in the area known as the Massachusetts Bay Closure Area (Figure 3 to part 651), as defined by straight lines connecting the following points in the order stated, except as specified in paragraphs (d) and (h)(2) of this section:

Point latitude	Longitude
MB1 42°30′ N.	Massachusetts shoreline.
MB2 42°30′ N.	70°30′ W.
MB3 42°12′ N.	70°30′ W.
MB4 42°12′ N.	70°00′ W.
MB5 Cape Cod shoreline.	70°00′ W.
MB6 42°00′ N.	Cape Cod shoreline.

Point latitude	Longitude
MB7 42°00′ N.	Massachusetts shoreline.

(2) *Exceptions.* Paragraph (h)(1) of this section does not apply to persons on fishing vessels or fishing vessels:

(i) That have not been issued a Federal multispecies permit under § 651.4 and that are fishing exclusively in state waters.

(ii) Fishing with or using exempted gear as defined under this part, excluding mid-water trawl gear, provided that there is no other gear on board capable of catching multispecies finfish.

(iii) Classified as charter, party, or recreational.

8. Section 651.22 is revised to read as follows:

§ 651.22 Effort-control program for limited access vessels.

(a) A vessel issued a limited access multispecies permit under § 651.4(b) may not fish for, possess or land regulated species except during a DAS as allocated under and in accordance with the applicable DAS program described below, unless otherwise provided in these regulations.

(b) *DAS program—Permit categories, allocations and initial assignments to categories.* For the remainder of the 1996 fishing year, all limited access multispecies permit holders shall be assigned to one of the following DAS permit categories according to the criteria specified. Permit holders may request a change in permit category for the remainder of the 1996 fishing year and all fishing years thereafter as specified in § 651.4(f)(3). Each fishing year shall begin on May 1 and extend through April 30 of the following year.

(1) *Individual DAS Category*—(i) *DAS allocation.* Vessels assigned to the Individual DAS category shall be allocated 65 percent of their initial 1994 allocation baseline determined by regulations implementing Amendment 5 to the FMP for the 1996 fishing year multiplied by the proration factor equal to 0.83 and 50 percent of the vessel's initial allocation baseline for the 1997 fishing year and beyond, as calculated under paragraph (d)(1) of this section.

(ii) *Initial assignment.* All vessels issued valid Individual DAS limited access multispecies permits, with the exception of vessels that have also been issued limited access multispecies Gillnet category permits, as of the effective date of the final rule for Amendment 7, shall be initially assigned to this category.

(2) *Fleet DAS Category*—(i) *DAS allocation.* Vessels assigned to the Fleet DAS category shall be allocated 139 DAS for the 1996 fishing year multiplied by the proration factor equal to 0.83 for a total of 115 DAS, and 88 DAS for the 1997 fishing year and beyond.

(ii) *Initial assignment.* As of the effective date of the final rule for Amendment 7, vessels issued valid permits in one of the following categories shall be initially assigned to this category: Fleet DAS permit holders; limited access multispecies Hook-Gear permit holders; limited access multispecies Gillnet permit holders; limited access multispecies 45 ft (13.7 m) category permit holders that are larger than 20 ft (6.1 m) in length as determined by the most recent permit application. determined by the most recent permit application.

(3) *Small vessel category*—(i) *DAS allocation.* Vessels qualified and electing to fish under the Small Vessel category may retain cod, haddock, and yellowtail flounder, combined up to 300 lb (136.1 kg) per trip without being subject to DAS restrictions. These vessels are not subject to a possession limit for the other multispecies finfish.

(ii) *Initial assignment.* All vessels issued a valid limited access multispecies permit and fishing under the small boat exemption (less than or equal to 45 ft (13.7 m)) permit as of the effective date of the final rule for Amendment 7, and that are 20 ft (6.1 m) or less in length as determined by the vessel's last application for a permit shall be initially assigned to this category. Other vessels may elect to change into this category as provided for in § 651.4(f)(3) if such vessel meets or complies with the following:

(A) The vessel is 30 ft (9.1 m) or less in length overall as determined by measuring along a horizontal line drawn from a perpendicular raised from the outside of the most forward portion of the stem of the vessel to a perpendicular raised from the after most portion of the stern.

(B) Vessels for which construction was begun after May 1, 1994, must be constructed such that the quotient of the overall length divided by the beam will not be less than 2.5.

(C) Acceptable verification for vessels 20 ft (6.1 m) or less in length shall be U.S. Guard documentation or state registration papers. For vessels over 20 ft (6.1 m) in length, the measurement of length must be verified in writing by a qualified marine surveyor, or the builder, based on the boat's construction plans, or by other means determined acceptable by the Regional Director. A copy of the verification must accompany an application for a Federal multispecies permit issued under § 651.4.

(D) Adjustments to the small-boat category requirements, including changes to the length requirement, if required to meet fishing mortality goals, may be made following a reappraisal and analysis under the framework provisions specified in subpart C.

(4) *Hook-Gear Category*—(i) *DAS allocation.* Vessels issued a valid limited access multispecies Hook-Gear permit shall be allocated 139 DAS multiplied by the proration factor equal to 0.83 for a total of 115 DAS for the 1996 fishing year and 88 DAS for the 1997 fishing year and beyond. A vessel fishing in this permit category under the DAS program must meet or comply with the following while fishing for, in possession of, or landing, regulated species:

(A) Vessels, and persons on such vessels, are prohibited from possessing gear other than hook gear on board the vessel.

(B) Vessels, and persons on such vessels, are prohibited from fishing, setting, or hauling back, per day, or possessing on board the vessel, more than 4,500 rigged hooks. An unbaited hook and gangion that has not been secured to the ground line of the trawl on board a vessel is deemed to be a replacement hook and is not counted toward the 4,500 hook limit. A ''snap-on'' hook is deemed to be a replacement hook if it is not rigged or baited.

(ii) *Initial assignment.* No vessel shall be initially assigned to the Hook-Gear category. Any vessel that meets the qualifications specified in § 651.4(b)(1) may apply for and obtain a permit to fish under this category.

(5) *Combination Vessel Category*—(i) *DAS allocation.* Vessels assigned to the Combination Vessel category shall be allocated 65 percent of their initial 1994 allocation as determined by regulations implementing Amendment 5 to the FMP multiplied by the proration factor equal to 0.83 for the 1996 fishing year and 50 percent of the vessel's initial allocation baseline for the 1997 fishing year and beyond, as calculated under paragraph (d)(1) of this section.

(ii) *Initial assignment.* All vessels issued a valid limited access multispecies permit qualified to fish as a Combination Vessel as of the effective date of the final rule for Amendment 7 shall be assigned to this category.

(6) *Large Mesh Individual DAS Category*—(i) *DAS allocation.* Vessels fishing under the Large Mesh Individual DAS category shall be allocated a DAS increase that is equivalent to a 12 percent increase in DAS in year 1 and a 36 percent increase in DAS in year 2

beyond the DAS allocations specified in (b)(1)(i) of this section, which includes the proration factor for 1996. To be eligible to fish under the Large Mesh Individual DAS permit category a vessel while fishing under the DAS program, must fish with gillnet gear with a minimum mesh net of 7 inch (17.78 cm) diamond or trawl gear with a minimum mesh size of 8 inch (20.32 cm) diamond, for the entire fishing year, as described under § 651.20 (a)(2)(ii), (c)(2)(ii), and (d)(2)(ii).

(ii) *Initial assignment.* No vessel shall be initially assigned to the Large Mesh Individual DAS category. Any vessel that is initially assigned to the Individual DAS, Fleet DAS, or Small Vessel permit category may request and be granted a change in category into this category as specified in § 651.4(f)(3).

(7) *Large Mesh Fleet DAS Category*—(i) *DAS allocation.* Vessels fishing under the Large Mesh Fleet DAS category shall be allocated 155 DAS multiplied by the proration factor equal to 0.83 for the 1996 fishing year, and 120 DAS for the 1997 fishing year and beyond. To be eligible to fish under the Large Mesh Fleet DAS permit category a vessel must fish with gillnet gear with a minimum mesh net of 7 inch (17.78 cm) diamond or trawl gear with a minimum mesh size of 8 inch (20.32 cm) diamond, as described under § 651.20(a)(2)(ii), (c)(2)(ii), and (d)(2)(ii).

(ii) *Initial assignment.* No vessel shall be initially assigned to the Large Mesh Fleet DAS category. Any vessel that is initially assigned to the Individual DAS, Fleet DAS, or Small Vessel permit category may request and be granted a change in category into this category as specified in § 651.4(f)(3).

(c) *The 1996 DAS appeals.* (1) *Previously exempted vessels.* A vessel that was issued a valid 1995 limited access multispecies permit, and has been fishing under the Small boat exemption (less than or equal to 45 ft (13.7 m)), Hook-Gear or Gillnet permit categories, that elects to fish under the Individual DAS category, and has not previously been allocated Individual DAS, is eligible to appeal its allocation of DAS if it has not previously done so, as described under paragraph (d)(2) of this section. Each of these vessel's initial allocation of Individual DAS will be considered to be 176 for purposes of this appeal (that is, the Fleet DAS category baseline prior to the 1996–97 reductions).

(2) *Exempted gillnet vessels that held an Individual DAS permit.* A vessel that was issued a valid 1995 limited access multispecies permit and fishing under the Gillnet permit category and the Individual DAS permit category, that elects to fish under the Individual DAS category, is eligible to appeal its allocation of gillnet DAS, as described under paragraph (d)(2) of this section. Each of these vessels' initial allocation of Individual DAS will be considered to be 176 for purposes of this appeal (that is, the Fleet DAS category baseline prior to the 1996–97 reductions).

(d) *Individual DAS allocations*—(1) *Calculation of a vessel's Individual DAS.* The DAS assigned to a vessel for purposes of determining that vessel's annual allocation under the Individual DAS Program shall be calculated as follows:

(i) Calculate the total number of the vessel's multispecies DAS for the years 1988, 1989, and 1990. Multispecies DAS are deemed to be the total number of days the vessel was absent from port for a trip where greater than 10 percent of the vessel's total landings were comprised of regulated species, minus any days for such trips in which a scallop dredge was used.

(ii) Exclude the year of least multispecies DAS.

(iii) If 2 years of multispecies DAS are remaining, average those years' DAS, or, if only 1 year remains, use that year's DAS.

(2) *Appeal of DAS allocation*—(i) Initial allocations of Individual DAS to those vessels authorized to appeal under paragraph (c) of this section may be appealed to the Regional Director if a request to appeal is received by the Regional Director no later than August 31, 1996, or 30 days after the initial allocation is made, whichever is later. Any such appeal must be in writing and be based on one or more of the following grounds:

(A) The information used by the Regional Director was based on mistaken or incorrect data;

(B) The applicant was prevented by circumstances beyond his/her control from meeting relevant criteria; or

(C) The applicant has new or additional information.

(ii) The Regional Director will appoint a designee who will make an initial decision on the written appeal.

(iii) If the applicant is not satisfied with the initial decision, the applicant may request that the appeal be presented at a hearing before an officer appointed by the Regional Director.

(iv) The hearing officer shall present his/her findings to the Regional Director and the Regional Director will make a decision on the appeal. The Regional Director's decision on this appeal is the final administrative decision of the Department of Commerce.

(3) *Status of vessels pending appeal of DAS allocations.* Vessels, while their Individual DAS allocation is under appeal, may fish under the Fleet DAS category until the Regional Director has made a final determination on the appeal. Any DAS spent fishing for regulated species by a vessel while that vessel's initial DAS allocation is under appeal, shall be counted against any DAS allocation that the vessel may ultimately receive.

(e) *Accrual of DAS.* DAS shall accrue in hourly increments, with all partial hours counted as full hours.

(f) *Good Samaritan credit.* Limited access vessels fishing under the DAS program and that spend time at sea for one of the following reasons, and that can document the occurrence through the U.S. Coast Guard, will be credited for the time documented:

(1) Time spent assisting in a U.S. Coast Guard search and rescue operation; or

(2) Time spent assisting the U.S. Coast Guard in towing a disabled vessel.

(g) *Spawning season restrictions.* Vessels issued a valid Small Vessel category permit under paragraph (b)(3) of this section may not fish for, possess, or land regulated species between March 1 and March 20 of each year. All other vessels issued limited access permits must declare out and be out of the regulated multispecies finfish fishery for a 20-day period between March 1 and May 31 of each calendar year using the notification requirements specified under § 651.29. If a vessel owner has not declared, or taken, the period of time required between March 1 and May 31 of each fishing year on or before May 12 of each such year, the vessel is prohibited from fishing for, possessing or landing any regulated species during the period May 12 through May 31, inclusive. If a vessel has taken a spawning season 20-day block out of the multispecies fishery during May, 1996, it shall not be required to take a 20-day block out of the multispecies fishery in 1997. Beginning January 1, 1998, any such vessel must comply with the spawning season restriction as specified in this part.

(h) *Declaring DAS and 20-day blocks.* A vessel's owner or authorized representative shall notify the Regional Director of a vessel's participation in the DAS program and declaration of its 20-day spawning period out of the multispecies fishery using the notification requirements specified under § 651.29.

(i) *Adjustments in annual DAS allocations.* Adjustments in annual DAS allocations, if required to meet fishing mortality goals, may be made following

a reappraisal and analysis as specified in subpart C.

9. In § 651.23, paragraph (a) introductory text, and paragraphs (d) and (e) are revised to read as follows:

§ 651.23 Minimum fish size.

(a) Minimum fish sizes for recreational vessels and charter/party vessels that are not fishing under a multispecies DAS are specified in § 651.34. All other vessels are subject to minimum fish sizes (total length) as follows:

* * * * *

(d) *Exception.* Each person aboard a vessel issued a limited access permit and fishing under the DAS program may possess up to 25 lb (11.3 kg) of fillets that measure less than the minimum size, if such fillets are from legal-sized fish and are not offered or intended for sale, trade, or barter.

(e) *Adjustments of minimum size.* (1) At anytime when information is available, the Council will review the best available mesh selectivity information to determine the appropriate minimum size for the species listed in paragraph (a) of this section, except winter flounder, according to the length at which 25 percent of the regulated species would be retained by the applicable minimum mesh size.

(2) Upon determination of the appropriate minimum sizes, the Council shall propose the minimum fish sizes to be implemented following the procedures specified in subpart C.

(3) Additional adjustments or changes to the minimum fish sizes specified in paragraphs (a) and (b) of this section, and exemptions as specified in paragraphs (a) and (b) of this section, and exemptions as specified in paragraph (c) of this section, may be made at any time after implementation of the final rule as specified under subpart C.

10. Section 651.27 is revised to read as follows:

§ 651.27 Additional haddock possession restrictions.

(a) *Haddock*—(1) *Multispecies DAS vessels.* A vessel issued a limited access multispecies permit under this part that is fishing under a multispecies DAS may land, or possess on board, up to 1000 lb (453.6 kg) of haddock. Haddock on board a vessel subject to this possession limit must be separated from other species of fish and stored so as to be readily available for inspection. Vessels subject to this possession limit shall have on board the vessel at least one standard tote.

(2) *Scallop dredge vessels*—(i) No person owning or operating a scallop dredge vessel issued a permit under this part may land haddock from, or possess haddock on board, a scallop dredge vessel, from January 1 through June 30.

(ii) No person owning or operating a scallop dredge vessel without a permit under this part may possess haddock in, or harvested from, the EEZ, from January 1 through June 30.

(iii) From July 1 through December 31, no scallop dredge vessel or persons owning or operating a scallop dredge vessel, that is fishing under the scallop DAS program as described in § 651.20(i), may land, or possess on board, more than 300 lb (136.1 kg) of haddock. Haddock on board a vessel subject to this possession limit must be separated from other species of fish and stored so as to be readily available for inspection. Vessels subject to this possession limit shall have on board the vessel at least one standard tote.

(b) Vessels are subject to any other applicable possession limit restrictions of this part.

11. In § 651.28, paragraph (c) is removed, the heading and the first sentence of paragraph (a), and paragraph (b) are revised to read as follows:

§ 651.28 Monitoring requirements.

(a) *Individual DAS limited access multispecies vessels.* Unless otherwise authorized or required by the Regional Director under § 651.29(b), vessel owners fishing under the Individual DAS program and Combination Vessels must have installed on board an operational VTS unit that meets the minimum performance criteria specified in paragraph (a)(2) of this section, or as modified annually as specified in paragraph (a)(1) of this section. * * *

(b) *Fleet DAS and other limited access multispecies vessels.* Vessels issued limited access multispecies permits who are participating in a DAS program and who are not required to provide notification using a VTS shall be subject to the call-in requirements specified in § 651.29(b).

12. Section 651.29 is revised to read as follows:

§ 651.29 DAS notification program.

(a) *VTS notification.* Unless otherwise authorized by the Regional Director as specified in paragraph (c) of this section, owners of vessels issued limited access multispecies permits that have elected to or are required to use a VTS system shall be subject to the following requirements:

(1) Vessels that are issued limited access multispecies permits, that have crossed the demarcation line specified under paragraph (d) of this section, are deemed to be fishing under the DAS program unless the vessel's owner or authorized representative declares the vessel out of the multispecies fishery, by notifying the Regional Director through the VTS. The owner or authorized representative of any vessel that has been declared out of the multispecies fishery must notify the Regional Director through the VTS prior to leaving port on the vessel's next trip under the DAS program.

(2) If the VTS is not available, or not functional, and if authorized by the Regional Director, a vessel owner must comply with the call-in notification requirements specified in paragraph (b) of this section.

(3) Notification that the vessel is not under the DAS program must be received prior to the vessel leaving port. A change in status of a vessel cannot be made after the vessel leaves port or before it returns to port on any fishing trip.

(b) *Call-in notification.* Vessel owners authorized or required to provide notification using the call-in system shall be subject to the following requirements:

(1) The vessel owner or authorized representative shall notify the Regional Director, prior to leaving port, that the vessel will be participating in the applicable DAS program by calling 1–800–260–8204 or 508–281–9335, and providing the following information: Vessel name and permit number, owner and caller name and phone number, the type of trip to be taken, the port of departure, and that the vessel is beginning a trip.

(2) A multispecies DAS begins once the call has been received and confirmation given by the Regional Director.

(3) The vessel's confirmation numbers for the current and immediately prior multispecies fishing trip must be maintained on board the vessel and provided to an authorized officer upon request.

(4) Upon returning to port, at the end of a fishing trip as defined in paragraph (d) of this section, the vessel owner or owner's representative shall notify the Regional Director that the trip has ended by calling 1–800–260–8204 or 508–281–9335, and providing the following information: Vessel name and permit number, owner and caller name and telephone number, port landed, confirmation number, and that the fishing trip has ended.

(5) A DAS ends when the call has been received and confirmation given by the Regional Director.

(6) Any vessel issued a limited access multispecies permit subject to the DAS program and call-in requirement, that possess or lands regulated species, except as provided in § 651.34, shall be deemed in the DAS program for purposes of counting DAS, regardless of whether or not the vessel's owner or authorized representative provided adequate notification as required by this part.

(7) Any change in status of a vessel cannot be done after leaving port on any fishing trip.

(c) *Temporary authorization for use of the call-in system.* The Regional Director may authorize or require, on a temporary basis, the use of an alternative call-in system of notification. If the call-in system is authorized or required, the Regional Director shall notify affected permit holders through a letter, notification in the Federal Register, or other appropriate means. Vessel owners authorized or required by the Regional Director to provide notification by a call-in system under this paragraph shall be subject to the requirements specified in paragraph (b) of this section.

(d) *Counting of DAS for vessels fishing under the VTS system.* (1) DAS for vessels that are under the VTS monitoring system described in § 651.29(a) are counted beginning with the first hourly location signal received showing that the vessel crossed the Vessel Tracking System Demarcation Line leaving port. A trip concludes and accrual of DAS ends with the first hourly location signal received showing that the vessel crossed the Vessel Tracking System Demarcation Line upon its return to port.

(2) *Vessel Tracking System Demarcation Line.* The VTS Demarcation Line is defined as straight lines connecting the following points in the order stated (see Figures 6 and 7 to part 651):

VESSEL TRACKING SYSTEM DEMARCATION LINE

Description	Longitude	Latitude
1. Northern terminus point (Canada land mass)	45°03′ N.	66°47′ W.
2. A point east of West Quoddy Head Light	44°48.9′ N.	66°56.1′ W.
3. A point east of Little River Light	44°39.0′ N.	67°10.5′ W.
4. Whistle Buoy "8BI" (SSE of Baker Island)	44°13.6′ N.	68°10.8′ W.
5. Isle au Haut Light	44°03.9′ N.	68°39.1′ W.
6. Pemaquid Point Light	43°50.2′ N.	69°30.4′ W.
7. A point west of Halfway Rock	43°38.0′ N.	70°05.0′ W.
8. A point east of Cape Neddick Light	43°09.9′ N.	70°34.5′ W.
9. Merrimack River Entrance "MR" Whistle Buoy	42°48.6′ N.	70°47.1′ W.
10. Halibut Point Gong Buoy "1AHP"	42°42.0′ N.	70°37.5′ W.
11. Connecting reference point	42°40′ N.	70°30′ W.
12. Whistle Buoy "2" off Eastern Point	42°34.3′ N.	70°39.8′ W.
13. The Graves Light (Boston)	42°21.9′ N.	70°52.2′ W.
14. Minots Ledge Light	42°16.2′ N.	70°45.6′ W.
15. Farnham Rock Lighted Bell Buoy	42°05.6′ N.	70°36.5′ W.
16. Cape Cod Canal Bell Buoy "CC"	41°48.9′ N.	70°27.7′ W.
17. A point inside Cape Cod Bay	41°48.9′ N.	70°05′ W.
18. Race Point Lighted Bell Buoy "RP"	42°04.9′ N.	70°16.8′ W.
19. Peaked Hill Bar Whistle Buoy "2PH"	42°07.0′ N.	70°06.2′ W.
20. Connecting point, off Nauset Light	41°50′ N.	69°53′ W.
21. A point south of Chatham "C" Whistle Buoy	41°38′ N.	69°55.2′ W.
22. A point in eastern Vineyard Sound	41°30′ N.	70°33′ W.
23. A point east of Martha's Vineyard	41°22.2′ N.	70°24.6′ W.
24. A point east of Great Pt. Light, Nantucket	41°23.4′ N.	69°57′ W.
25. A point SE of Sankaty Head, Nantucket	41°13′ N.	69°57′ W.
26. A point west of Nantucket	41°15.6′ N.	70°25.2′ W.
27. Squibnocket Lighted Bell Buoy "1"	41°15.7′ N.	70°46.3′ W.
28. Wilbur Point (on Sconticut Neck)	41°35.2′ N.	70°51.2′ W.
29. Mishaum Point (on Smith Neck)	41°31.0′ N.	70°57.2′ W.
30. Sakonnet Entrance Lighted Whistle Buoy "SR"	41°25.7′ N.	71°13.4′ W.
31. Point Judith Lighted Whistle Buoy "2"	41°19.3′ N.	71°28.6′ W.
32. A point off Block Island Southeast Light	41°08.2′ N	71°32.1′ W.
33. Shinnecock Inlet Lighted Whistle Buoy "SH"	40°49.0′ N.	72°28.6′ W.
34. Scotland Horn Buoy "S", off Sandy Hook (NJ)	40°26.5′ N.	73°55.0′ W.
35. Barnegat Lighted Gong Buoy "2"	39°45.5′ N.	73°59.5′ W.
36. A point east of Atlantic City Light	39°21.9′ N.	74°22.7′ W.
37. A point east of Hereford Inlet Light	39°00.4′ N.	74°46′ W.
38. A point east of Cape Henlopen Light	38°47′ N.	75°04′ W.
39. A point east of Fenwick Island Light	38°27.1′ N.	75°02′ W.
40. A point NE of Assateague Island (VA)	38°00′ N.	75°13′ W.
41. Wachapreague Inlet Lighted Whistle Buoy "A"	37°35.0′ N.	75°33.7′ W.
42. A point NE of Cape Henry	36°55.6′ N.	75°58.5′ W.
43. A point east of Currituck Beach Light	36°22.6′ N.	75°48′ W.
44. Oregon Inlet (NC) Whistle Buoy	35°48.5′ N.	75°30′ W.
45. Wimble Shoals, east of Chicamacomico	35°36′ N.	75°26′ W.
46. A point SE of Cape Hatteras Light	35°12.5′ N.	75°30′ W.
47. Hatteras Inlet Entrance Buoy "HI"	35°10′ N.	75°46′ W.
48. Ocracoke Inlet Whistle Buoy "OC"	35°01.5′ N.	76°00.5′ W.
49. A point east of Cape Lookout Light	34°36.5′ N.	76°30′ W.
50. Southern terminus point	34°45′ N.	76°41′ W.

(e) *Call-in for 20 day blocks.* With the exception of vessels issued a valid Small Vessel category permit, vessels subject to the spawning season restriction described in § 651.22 must notify the Regional Director of the commencement date of their 20-day period out of the multispecies fishery through either the VTS system or by calling 1–800–260–8204 or 508–281–9335 and providing the following information: Vessel name and permit number, owner and caller name and phone number, and the commencement date of the 20 day period.

13. In § 651.31, paragraph (d) is added to read as follows:

§ 651.31 At-sea observer coverage.

* * * * *

(d) *Industry funded observer coverage.* NMFS may accept observer coverage funded by sources outside the U.S. Government provided the following requirements are met:

(1) All coverage conducted by such observers is determined by NMFS to be in compliance with NMFS' observer guidelines and procedures.

(2) The owner or operator of the vessel complies with all other provisions of this part.

(3) The observer is approved by the Regional Director.

14. Section 651.32 is revised to read as follows:

§ 651.32 Sink gillnet requirements to reduce harbor porpoise takes.

(a) *Areas closed to sink gillnets.* (1) *Harbor porpoise take restrictions.* The closed area restrictions prohibiting sink gillnets in the areas and times specified in § 651.21(f) through (h) are implemented in order to reduce the takes of harbor porpoise consistent with the harbor porpoise mortality reduction goals.

(2) *Additional harbor porpoise area closures.* All persons owning or operating vessels must remove all of their sink gillnet gear from, and may not use, set, haul back, fish with, or possess on board, unless stowed in accordance with § 651.21(e)(4), a sink gillnet in the EEZ portion of the areas and for the times specified in paragraphs (a)(2)(i) and (ii) of this section; and, all persons owning or operating vessels issued a Federal multispecies limited access permit must remove all of their sink gillnet gear from, and may not use, set, haul back, fish with, or possess on board a vessel, unless stowed in accordance with § 651.21(e)(4), a sink gillnet in the areas, and for the times specified, in paragraphs (a)(2)(i) and (ii) of this section.

(i) *Mid-coast Closure Area.* During the period March 25 through April 25 of each fishing year, the restrictions and requirements specified under paragraph (a)(2) of this section shall apply to the Mid-coast Closure Area, as defined under § 651.21(g)(1).

(ii) *Cape Cod South Area Closure.* During the period March 1 through March 30 of each fishing year, the restrictions and requirements specified under paragraph (a)(2) of this section shall apply to an area known as the Cape Cod South Area Closure which is an area bounded by straight lines connecting the following points in the order stated (see Figure 9 of this part).

CAPE COD SOUTH CLOSURE AREA

Point	Latitude	Longitude
CCS1	RI shoreline	71°45′ W.
CCS2	40°40′ N.	71°45′ W.
CCS3	40°40′ N.	70°30′ W.
CCS4	MA shoreline	70°30′ W.

(b) *Framework adjustment.* (1) At least annually the Regional Director will provide the Council with the best available information on the status of Gulf of Maine harbor porpoise including estimates of abundance and estimates of bycatch in the sink gillnet fishery. Within 60 days of receipt of that information, the Council's Harbor Porpoise Review Team shall complete a review of the data, assess the adequacy of existing regulations, evaluate the impacts of other measures that reduce harbor porpoise take and, if necessary, recommend additional measures in light of the Council's harbor porpoise mortality reduction goals. In addition, the HPRT shall make a determination on whether other conservation issues exist that require a management response to meet the goals and objectives outlined in the FMP. The HPRT shall report its findings and recommendations to the Council.

(2) After receiving and reviewing the HPRT's findings and recommendations, the Council shall determine whether adjustments or additional management measures are necessary to meet the goals and objectives of the FMP. If the Council determines that adjustments or additional management measures are necessary, or at any other time in consultation with the HPRT, it shall develop and analyze appropriate management actions over the span of at least two Council meetings.

(3) The Council may request at any time that the HPRT review and make recommendations on any harbor porpoise take reduction measures or develop additional take reduction proposals.

(4) The Council shall provide the public with advance notice of the availability of the proposals, appropriate rationale, economic and biological analyses, and opportunity to comment on them prior to and at the second Council meeting. The Council's recommendation on adjustments or additions to management measures must come from one or more of the categories specified under § 651.40(b)(1).

(5) If the Council recommends that the management measures should be published as a final rule, the Council must consider at least the factors specified in § 651.40(b)(2).

(6) The Regional Director may accept, reject, or with Council approval, modify the Council's recommendation, including the Council's recommendation to publish a final rule, as specified under § 651.40(b)(3).

14. Section 651.33 is revised to read as follows:

§ 651.33 Open access permit restrictions.

(a) *Handgear permit.* A vessel issued a valid open access Handgear permit issued under § 651.4(c) is subject to the following restrictions:

(1) The vessel may possess and land up to 300 lb (136.1 kg) of cod, haddock, and yellowtail flounder, combined, per trip, and unlimited amounts of the other multispecies finfish provided that it does not use, or possess on board, gear other than rod and reel or handlines while in possession of, fishing for, or landing multispecies finfish. Vessels subject to this possession limit shall have at least one standard tote on board.

(2) A vessel may not fish for, possess, or land regulated species between March 1 and March 20 of each year.

(b) *Charter/party permit.* A vessel that has been issued a valid open access Charter/party permit under § 651.4(c), and has declared into the charter/party fishery, is subject to the restrictions on gear, recreational minimum fish sizes and prohibitions on sale specified in § 651.34, and any other applicable provisions of this part.

(c) *Scallop Multispecies Possession Limit Permit.* A vessel that has been issued a valid open access Scallop Multispecies Possession Limit permit under § 651.4(c) may possess and land up to 300 lb (136.1 kg) of regulated species when fishing under a scallop DAS as described under § 651.20(i), provided the vessel does not fish for, possess or land haddock during January 1 through June 30 as specified under § 651.27(a)(2)(i). Vessels subject to this possession limit shall have at least one standard tote on board.

15. Section 651.34 is added to subpart B to read as follows:

§ 651.34 Recreational and charter/party vessel restrictions.

(a) *Recreational gear restrictions.* Persons aboard charter or party vessels permitted under this part and not fishing under the DAS program, and recreational fishing vessels in the EEZ, are prohibited from fishing with more than two hooks per line and one line per angler and must stow all other fishing gear on board the vessel as specified under §§ 651.20(c)(4) and 651.21(e)(2), 651.21(e)(3) and 651.21(e)(4).

(b) *Recreational minimum fish sizes.* (1) Persons aboard charter or party vessels permitted under this part and not fishing under the DAS program, and recreational fishing vessels in the EEZ, are subject to minimum fish sizes (total length) as follows:

RECREATIONAL

Species	Inches	
	1996	1997+
Cod	20(50.8 cm)	21 (53.3 cm)
Haddock	20 (50.8 cm)	21 (53.3 cm)
Pollock	19 (48.3 cm)	19 (48.3 cm)
Witch flounder (gray sole)	14 (35.6 cm)	14 (35.6 cm)
Yellowtail flounder	13 (33.0 cm)	13 (33.0 cm)
American plaice (dab)	14 (35.6 cm)	14 (35.6 cm)
Winter flounder (blackback)	12 (30.5 cm)	12 (30.5 cm)
Redfish	9 (22.9 cm)	9 (22.9 cm)

(2) *Exception.* Persons aboard charter or party vessels permitted under this part and not fishing under the DAS program, and recreational fishing vessels in the EEZ, may possess fillets less than the minimum size specified, if the fillets are taken from legal-sized fish and are not offered or intended for sale, trade or barter.

(c) *Possession restrictions.* Each person on a recreational vessel may not possess more than 10 cod and/or haddock, combined, in or harvested from the EEZ:

(1) For purposes of counting fish, fillets will be converted to whole fish at the place of landing by dividing fillet number by two. If fish are filleted into a single (butterfly) fillet, such fillet shall be deemed to be from one whole fish.

(2) Cod and haddock harvested by recreational vessels with more than one person aboard may be pooled in one or more containers. Compliance with the possession limit will be determined by dividing the number of fish on board by the number of persons aboard. If there is a violation of the possession limit on board a vessel carrying more than one person, the violation shall be deemed to have been committed by the owner and operator.

(3) Cod and haddock must be stored, so as to be readily available for inspection.

(d) *Restrictions on sale.* It is unlawful to sell, barter, trade, or otherwise transfer for a commercial purpose, or to attempt to sell, barter, trade, or otherwise transfer for a commercial purpose, multispecies finfish caught or landed by charter or party vessels permitted under this part not fishing under a DAS or a recreational fishing vessels fishing in the EEZ.

16. Section 651.40 is revised to read as follows:

§ 651.40 Framework Specifications.

(a) *Annual review.* The Multispecies Monitoring Committee (MSMC) shall meet on or before November 15 of each year to develop target TACs for the upcoming fishing year and options for Council consideration on any changes, adjustment or additions to DAS allocations, closed areas or other measures necessary to achieve the FMP goals and objectives.

(1) The MSMC must review available data pertaining to the following:

(i) Catch and landings.

(ii) DAS and other measures of fishing effort.

(iii) Survey results.

(iv) Stock status.

(v) Current estimates of fishing mortality.

(vi) Any other relevant information.

(2) Based on this review, the MSMC shall recommend target TACs and develop options necessary to achieve the FMP goals and objectives, which may include a preferred option. The MSMC must demonstrate through analysis and documentation that the options it develops are expected to meet the FMP goals and objectives. The MSMC may review the performance of different user groups or fleet sectors in developing options. The range of options developed by the MSMC may include any of the management measures in the FMP including, but not limited to:

(i) The annual target TACs which must be based on the projected fishing mortality levels required to meet the goals and objectives outlined in the FMP for the 10 regulated species.

(ii) DAS changes.

(iii) Possession limits.

(iv) Gear restrictions.

(v) Closed areas.

(vi) Permitting restrictions.

(vii) Minimum fish sizes.

(viii) Recreational fishing measures.

(ix) Any other management measures currently included in the FMP.

(3) The Council shall review the recommended target TACs and all of the options developed by the MSMC, other relevant information, consider public comment, and develop a recommendation to meet the FMP objective that is consistent with other applicable law. If the Council does not submit a recommendation that meets the FMP objectives and is consistent with other applicable law, the Regional Director may adopt any option developed by the MSMC, unless rejected by the Council, as specified in (a)(6) of this section, provided that the option meets the FMP objective and is consistent with other applicable law.

(4) Based on this review, the Council shall submit a recommendation to the Regional Director of any changes, adjustments or additions to DAS allocations, closed areas or other measures necessary to achieve the FMP's goals and objectives. Included in the Council's recommendation will be supporting documents, as appropriate, concerning the environmental and economic impacts of the proposed action and the other options considered by the Council.

(5) If the Council submits, on or before January 7, a recommendation to the Regional Director after one Council meeting, and the Regional Director concurs with the recommendation, the Regional Director shall publish the

Council's recommendation in the Federal Register as a proposed rule. The Federal Register notification of proposed action will provide for a 30-day public comment period. The Council may instead submit its recommendation on or before February 1 if it chooses to follow the framework process outlined in paragraph (b) of this section and requests that the Regional Director publish the recommendation as a final rule. If the Regional Director concurs that the Council's recommendation meets the FMP objectives and is consistent with other applicable law and determines that the recommended management measures be published as a final rule, the action will be published as a final rule in the Federal Register. If the Regional Director concurs that the recommendation meets the FMP objectives and is consistent with other applicable law and determines that a proposed rule is warranted, and as a result the effective date of a final rule falls after the start of the fishing year on May 1, fishing may continue. However, DAS used by a vessel on or after May 1 will be counted against any DAS allocation the vessel ultimately receives for that year.

(6) If the Regional Director concurs in the Council's recommendation, a final rule shall be published in the Federal Register on or about April 1 of each year, with the exception noted in paragraph (a)(5) of this section. If the Council fails to submit a recommendation to the Regional Director by February 1 that meets the FMP goals and objectives, the Regional Director may publish as a proposed rule one of the options reviewed and not rejected by the Council, provided that the option meets the FMP objective and is consistent with other applicable law. If, after considering public comment, the Regional Director decides to approve the option published as a proposed rule, the action will be published as a final rule in the Federal Register.

(b) *Within season management action.* The Council may, at any time, initiate action to add or adjust management measures if it finds that action is necessary to meet or be consistent with the goals and objectives of the FMP.

(1) *Adjustment process.* After a management action has been initiated, the Council shall develop and analyze appropriate management actions over the span of at least two Council meetings. The Council shall provide the public with advance notice of the availability of both the proposals and the analysis, and opportunity to comment on them prior to and at the second Council meeting. The Council's recommendation on adjustments or additions to management measures must come from one or more of the following categories:

(i) DAS changes.

(ii) Effort monitoring.

(iii) Data reporting.

(iv) Possession limits.

(v) Gear restrictions.

(vi) Closed areas.

(vii) Permitting restrictions.

(viii) Crew limits.

(ix) Minimum fish sizes.

(x) Onboard observers.

(xi) Minimum hook size and hook style.

(xii) The use of crucifiers in the hook fishery.

(xiii) Fleet sector shares.

(xiv) Recreational fishing measures.

(xv) Area closures and other appropriate measures to mitigate marine mammal entanglements and interactions.

(xvi) Any other management measures currently included in the FMP.

(2) *Council recommendation.* After developing management actions and receiving public testimony, the Council shall make a recommendation to the Regional Director. The Council's recommendation must include supporting rationale, and, if management measures are recommended, an analysis of impacts, and a recommendation to the Regional Director on whether to publish the management measures as a final rule. If the Council recommends that the management measures should be published as a final rule, the Council must consider at least the following factors and provide support and analysis for each factor considered:

(i) Whether the availability of data on which the recommended management measures are based allows for adequate time to publish a proposed rule, and whether regulations have to be in place for an entire harvest/fishing season.

(ii) Whether there has been adequate notice and opportunity for participation by the public and members of the affected industry in the development of the Council's recommended management measures.

(iii) Whether there is an immediate need to protect the resource.

(iv) Whether there will be a continuing evaluation of management measures adopted following their implementation as a final rule.

(3) *Regional Director action.* If the Council's recommendation includes adjustments or additions to management measures, and if after reviewing the Council's recommendation and supporting information:

(i) The Regional Director concurs with the Council's recommended management measures and determines that the recommended management measures may be published as a final rule based on the factors specified in paragraph (b)(2) of this section, the action will be published in the Federal Register as a final rule; or

(ii) The Regional Director concurs with the Council's recommendation and determines that the recommended management measures should be published first as a proposed rule, the action will be published as a proposed rule in the Federal Register. After additional public comment, if the Regional Director concurs with the Council recommendation, the action will be published as a final rule in the Federal Register; or

(iii) The Regional Director does not concur, the Council will be notified, in writing, of the reasons for the non-concurrence.

(c) Nothing in this section is meant to derogate from the authority of the Secretary of Commerce to take emergency action under section 305(e) of the Magnuson Act.

17. Figure 5 to part 651 is removed and reserved, and Figures 1, 3, and 4 to part 651 are revised to read as follows:

BILLING CODE 3510–22–W

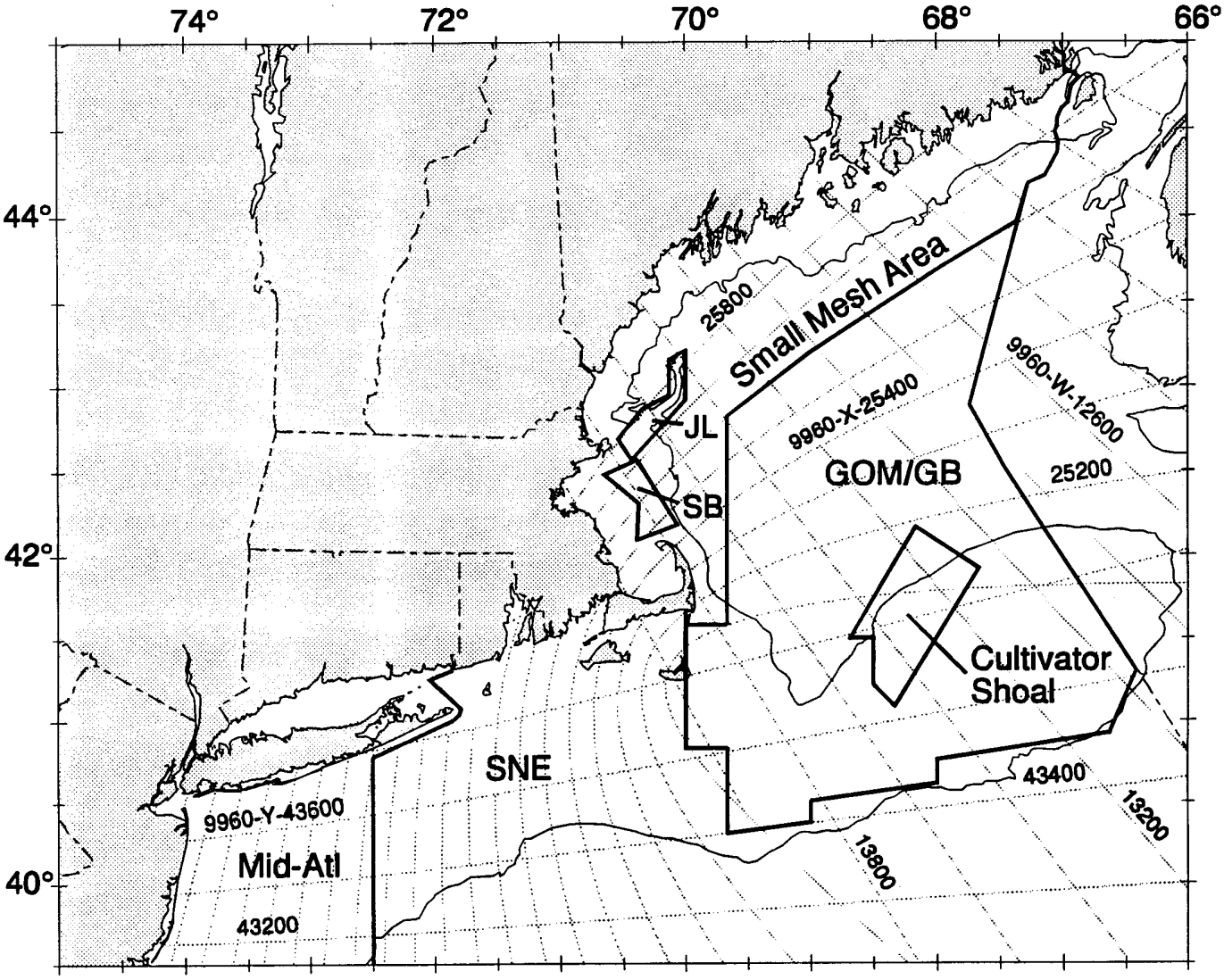

Regulated Mesh Area

Figure 1 to Part 651—Regulated Mesh Area

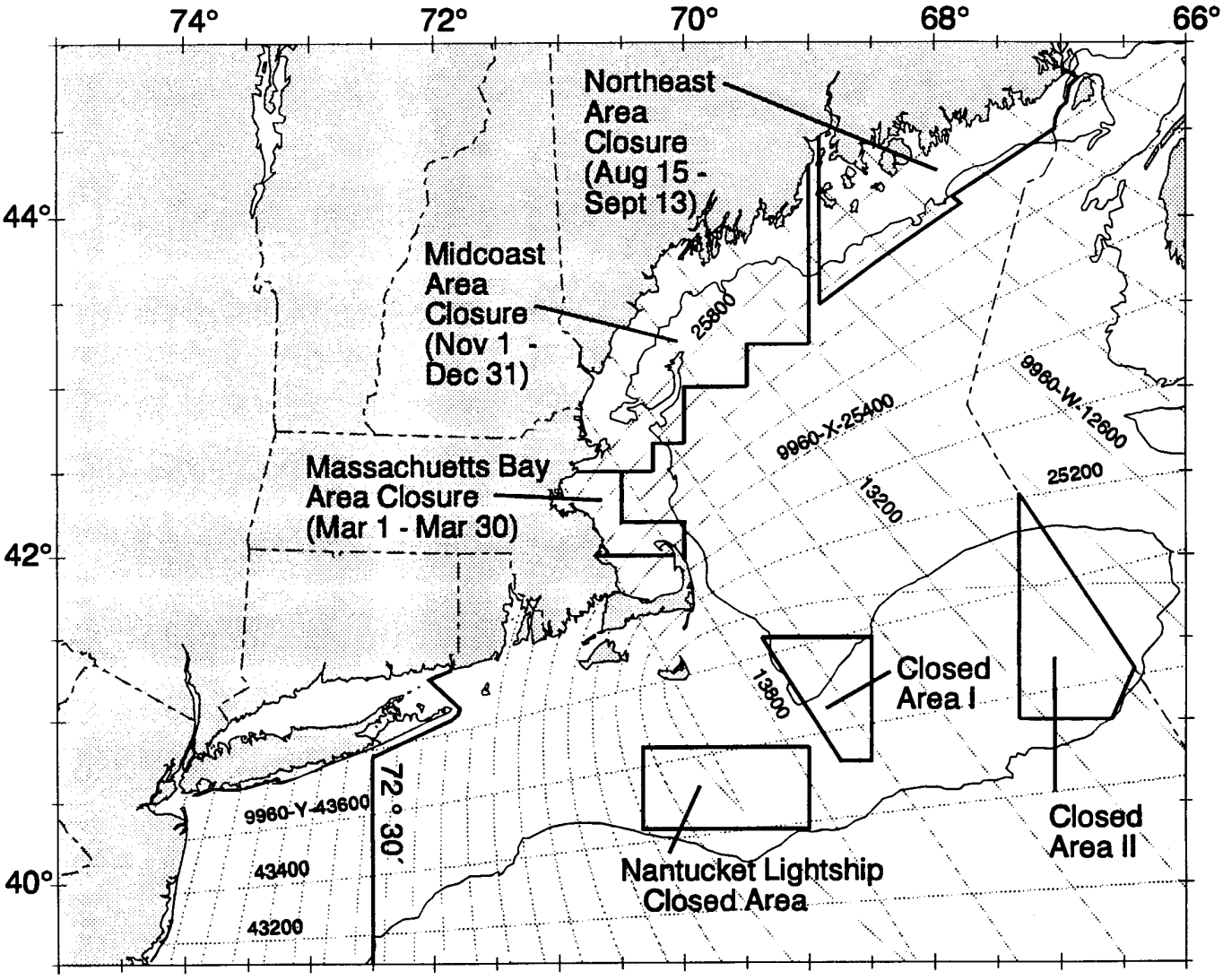

Closed Areas

Figure 3 to Part 651—Closed Areas

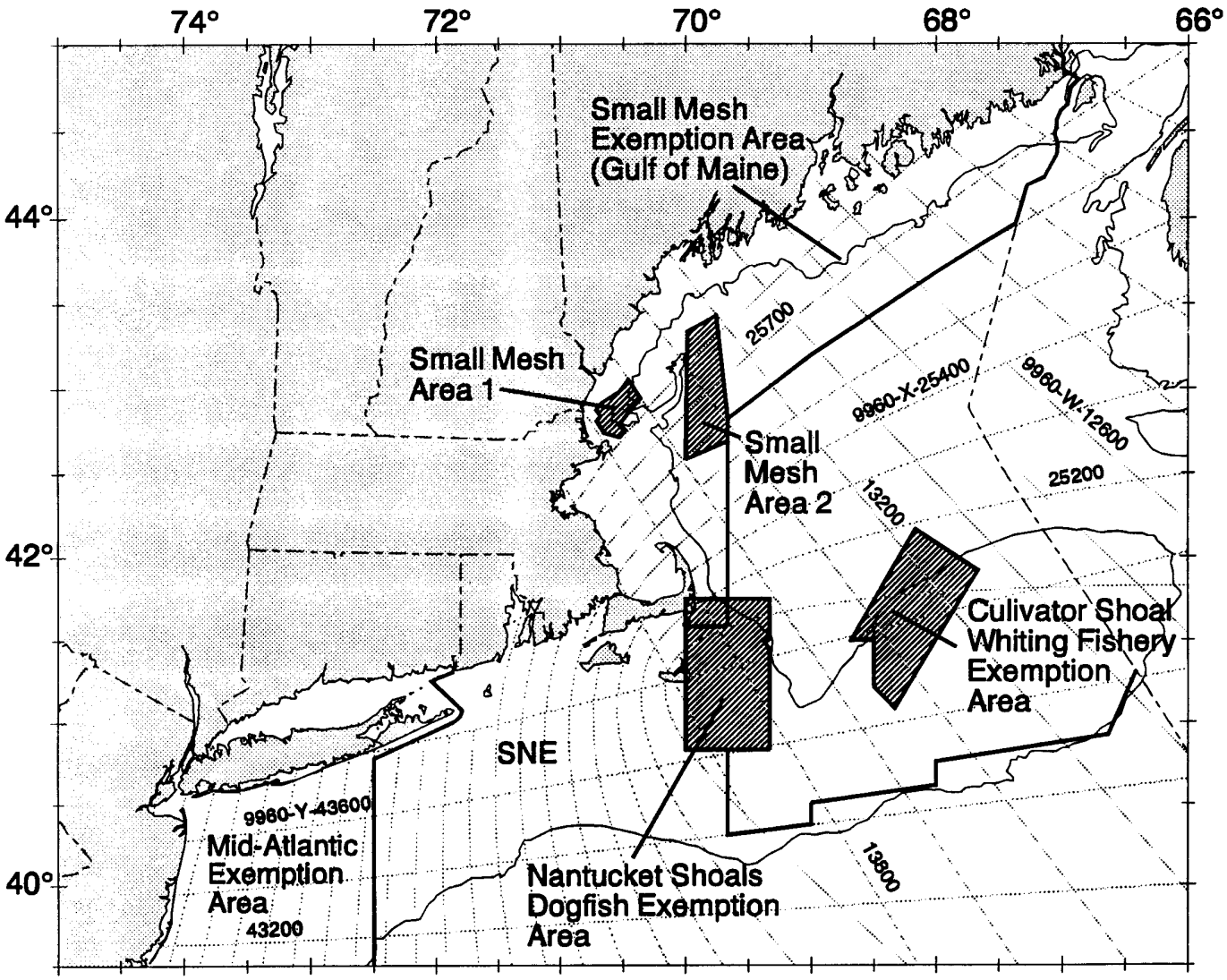

Exemption Areas

Figure 4 to Part 651—Exemption Areas

[FR Doc. 96–13707 Filed 5–30–96; 8:45 am]

BILLING CODE 3510–22–W

federal register

Friday
May 31, 1996

Part IV

Department of Agriculture

Cooperative State Research, Education, and Extension Service

7 CFR Part 3401

Rangeland Research Grants Program: Administrative Provisions; Final Rule

DEPARTMENT OF AGRICULTURE

Cooperative State Research, Education, and Extension Service

7 CFR Part 3401

Rangeland Research Grants Program; Administrative Provisions

AGENCY: Cooperative State Research, Education, and Extension Service, USDA.

ACTION: Final rule; amendment.

SUMMARY: This final rule amends the Cooperative State Research, Education, and Extension Service (CSREES) regulations relating to the administration of the Rangeland Research Grants Program, which prescribe the procedures to be followed annually in the solicitation of rangeland research grant proposals, the evaluation of such proposals, and the award of rangeland research grants under this program. This rule implements the requirements of the National Environmental Policy Act as outlined in § 3401.6(c)(16), revises the objectives of the program as stated in § 3401.17(a), changes the agency name to reflect the Departmental Reorganization, and makes a few additional minor changes. CSREES is publishing these regulations in their entirety to enhance their use by the public and to ensure expeditious submission and processing of grant proposals.

EFFECTIVE DATE: May 31, 1996.

FOR FURTHER INFORMATION CONTACT: Louise Ebaugh, Director, Office of Extramural Programs, Competitive Research Grants and Awards Management, Cooperative State Research, Education, and Extension Service, United States Department of Agriculture, Ag Box 2245, Washington, DC 20250–2245. (Telephone (202) 401–5024).

SUPPLEMENTARY INFORMATION:

Paperwork Reduction

The Office of Management and Budget has previously approved the information collection requirements contained in the current regulations at 7 CFR Part 3401 under the provisions of 44 U.S.C. Chapter 35 and OMB Document No. 0524–0022 has been assigned. Public reporting burden for the information collections contained in these regulations is estimated to vary from ½ hour to 3 hours per response, including the time for reviewing instructions, searching existing data sources, gathering and maintaining the data needed, and completing and reviewing the collection of information. Send comments regarding this burden estimate or any other aspect of this collection of information, including suggestions for reducing this burden, to Department of Agriculture, Clearance Officer, OIRM, Room 404–W, Washington, D.C. 20250; and to the Office of Management and Budget, Paperwork Reduction Project (OMB Document No. 0524–0022), Washington, D.C. 20503.

Classification

This rule has been reviewed under Executive Order 12866, and it has been determined that it is not a ''significant regulatory action'' rule because it will not have an annual effect on the economy of $100 million or more or adversely and materially affect a sector of the economy, productivity, competition, jobs, the environment, public health or safety, or State, local, or tribal governments or communities. This rule will not create any serious inconsistencies or otherwise interfere with any actions taken or planned by another agency. It will not materially alter the budgetary impact of entitlements, grants, user fees or loan programs and does not raise novel legal or policy issues arising out of legal mandates, the President's priorities, or principles set forth in Executive Order No. 12866.

Executive Order No. 12778

The following information is given in compliance with Executive Order No. 12778. All State and local laws and regulations that are in conflict with this rule are preempted. No retroactive effect is to be given to this rule. This rule does not require administrative proceedings before parties may file suit in court.

Executive Order No. 12612

This rule has been reviewed under Executive Order No. 12612 pertaining to Federalism. While this rule will affect institutions of higher education and other nonprofit organizations, it will do so only to the extent of requiring that applicants and grantees comply with existing laws, regulations, public policies, and the dictates of good management to ensure the safeguarding of public funds. For this reason, CSREES has determined that this rule will not have sufficient Federalism implications to warrant the preparation of a Federalism Assessment.

Regulatory Flexibility Act

The Department certifies that this rule will not have a significant impact on a substantial number of small entities as defined in the Regulatory Flexibility Act, Pub. L. No. 96–534 (5 U.S.C. 601 *et seq*).

Regulatory Analysis

Not required for this rulemaking.

Environmental Impact Statement

This regulation does not significantly affect the environment. Therefore, an environmental impact statement is not required under the National Environmental Policy Act of 1969, as amended. (42 U.S.C. 4321 *et seq.*)

Catalog of Federal Domestic Assistance

The Rangeland Research Grants Program is listed in the Catalog of Federal Domestic Assistance under No. 10.200. For reasons set forth in the Final Rule-related Notice to 7 CFR Part 3015, Subpart V (48 FR 29115, June 24, 1983), this program is excluded from the scope of Executive Order 12372 which requires intergovernmental consultation with State and local officials.

Background and Purpose

Under the authority of section 1480 of the National Agricultural Research, Extension, and Teaching Policy Act of 1977, as amended, the Secretary of Agriculture is authorized to make grants to land-grant colleges and universities, State agricultural experiment stations, and colleges, universities, and Federal laboratories having a demonstrable capacity in rangeland research, as determined by the Secretary, to carry out rangeland research. 7 CFR 2.107(a)(21) delegates this authority to the Administrator of CSREES. On April 23, 1993, the Rangeland Research Program regulations, 7 CFR Part 3401, were formally set out and published in the Federal Register. CSREES now amends the administrative regulations governing the Rangeland Research Grant Program authorized by section 1480 in order to implement the requirements of the National Environmental Policy Act in § 3401.6(c)(16), revise the program objectives in § 3401.17, change the Agency name from the Cooperative State Research Service to the Cooperative State Research, Education, and Extension Service, and make a few minor changes.

On October 27, 1995, the Department published a Notice in the Federal Register (60 FR 55160–55167) proposing the amendment of this rule and inviting comments from interested individuals and organizations. Written comments were requested by November 27, 1995. No comments were received.

List of Subjects in 7 CFR Part 3401

Grant programs—agriculture, Grants administration.

For the reasons set out in the preamble, Title 7, Subtitle B, Chapter XXXIV, Part 3401 of the Code of Federal Regulations, is revised to read as follows:

CHAPTER XXXIV—COOPERATIVE STATE RESEARCH, EDUCATION, AND EXTENSION SERVICE, DEPARTMENT OF AGRICULTURE

PART 3401—RANGELAND RESEARCH GRANTS PROGRAM

Subpart A—General

Sec.
3401.1 Applicability of regulations of this part.
3401.2 Definitions.
3401.3 Eligibility requirements.
3401.4 Matching funds requirement.
3401.5 Indirect costs and tuition remission costs.
3401.6 How to apply for a grant.
3401.7 Evaluation and disposition of applications.
3401.8 Grant awards.
3401.9 Use of funds; changes.
3401.10 Other Federal statutes and regulations that apply.
3401.11 Other conditions.

Subpart B—Scientific Peer Review of Research Applications for Funding

3401.12 Establishment and operation of peer review groups.
3401.13 Composition of peer review groups.
3401.14 Conflicts of interest.
3401.15 Availability of information.
3401.16 Proposal review.
3401.17 Review criteria.

Authority: Section 1470 of the National Agricultural Research, Extension and Teaching Policy Act of 1977 (7 U.S.C. 3316).

Subpart A—General

§ 3401.1 Applicability of regulations of this part.

(a) The regulations of this Part apply to rangeland research grants awarded under the authority of section 1480 of the National Agricultural Research, Extension, and Teaching Policy Act of 1977, as amended (7 U.S.C. 3333) to land-grant colleges and universities, State agricultural experiment stations, and colleges, universities, and Federal laboratories having a demonstrable capacity in rangeland research, as determined by the Secretary, to carry out rangeland research. The Administrator of the Cooperative State Research, Education, and Extension Service (CSREES) shall determine and announce, through publication each year of a Notice in the Federal Register, professional trade journals, agency or program handbooks, the catalog of Federal Domestic Assistance or any other appropriate means, research program areas for which proposals will be solicited, to the extent that funds are available.

(b) The regulations of this Part do not apply to research grants awarded by the Department of Agriculture under any other authority.

§ 3401.2 Definitions.

As used in this part:

(a) Administrator means the Administrator of CSREES and any other officer or employee of the Department of Agriculture to whom the authority involved may be delegated.

(b) Department means the Department of Agriculture.

(c) Principal investigator means a single individual designated by the grantee in the application for funding and approved by the Administrator who is responsible for the scientific and technical direction of the project.

(d) Grantee means the entity designated in the grant award document as the responsible legal entity to whom a grant is awarded under this Part.

(e) Research project grant means the award by the Administrator of funds to a grantee to assist in meeting the costs of conducting, for the benefit of the public, an identified project which is intended and designed to establish, discover, elucidate, or confirm information or the underlying mechanisms relating to a research program area identified in the annual solicitation of applications.

(f) Project means the particular activity within the scope of one or more of the research program areas identified in the annual solicitation of applications, which is supported by a grant award under this Part.

(g) Project period means the total length of time that is approved by the Administrator for conducting the research project as outlined in an approved application for funding.

(h) Budget period means the interval of time (usually 12 months) into which the project period is divided for budgetary and reporting purposes.

(i) Awarding official means the Administrator and any other officer or employee of the Department to whom the authority to issue or modify research project grant instruments has been delegated.

(j) Peer review group means an assembled group of experts or consultants qualified by training or experience in particular scientific or technical fields to give expert advice, in accordance with the provisions of this Part, on the scientific and technical merit of applications for funding in those fields.

(k) Ad hoc reviewers means experts or consultants qualified by training or experience in particular scientific or technical fields to render special expert advice, whose written evaluations of applications for funding are designed to complement the expertise of the peer review group, in accordance with the provisions of this Part, on the scientific or technical merit of applications for Funding in those fields.

(l) Research means any systematic study directed toward new or fuller knowledge and understanding of the subject studied.

(m) Methodology means the project approach to be followed and the resources needed to carry out the project.

§ 3401.3 Eligibility requirements.

(a) Except where otherwise prohibited by law, any land-grant college and university, State agricultural experiment station, and college, university, and Federal laboratory having a demonstrable capacity in rangeland research, as determined by the Secretary, shall be eligible to apply for and to receive a project grant under this Part, provided that the applicant qualifies as a responsible grantee under the criteria set forth in paragraph (b) of this section.

(b) To qualify as responsible, an applicant must meet the following standards as they relate to a particular project:

(1) Have adequate financial resources for performance, the necessary experience, organizational and technical qualifications, and facilities, or a firm commitment, arrangement, or ability to obtain such (including proposed subagreements);

(2) Be able to comply with the proposed or required completion schedule for the project;

(3) Have a satisfactory record of integrity, judgment, and performance, including, in particular, any prior performance under grants and contracts from the Federal government;

(4) Have an adequate financial management system and audit procedure which provides efficient and effective accountability and control of all property, funds, and other assets; and

(5) Be otherwise qualified and eligible to receive a research project grant under applicable laws and regulations.

(c) Any applicant who is determined to be not responsible will be notified in writing of such findings and the basis therefor.

§ 3401.4 Matching funds requirement.

In accordance with section 1480 of the National Agricultural Research, Extension, and Teaching Policy Act of

1977, as amended (7 U.S.C. 3333), except in the case of Federal laboratories, each grant recipient must match the Federal funds expended on a research project based on a formula of 50 percent Federal and 50 percent non-Federal funding.

§ 3401.5 Indirect costs and tuition remission costs.

Pursuant to section 1473 of the National Agricultural Research, Extension, and Teaching Policy Act of 1977, as amended (7 U.S.C. 3319), funds made available under this program to recipients other than Federal laboratories shall not be subject to reduction for indirect costs or tuition remission costs. Since indirect costs and tuition remission costs, except in the case of Federal laboratories, are not allowable costs for purposes of this program, such costs may not be used to satisfy the matching requirement set forth in § 3401.4.

§ 3401.6 How to apply for a grant.

(a) General. After consultation with the Rangeland Research Advisory Board, established pursuant to section 1482 of the National Agricultural Research, Extension, and Teaching Policy Act of 1977, as amended (7 U.S.C. 3335), a request for proposals will be prepared and announced through publications such as the Federal Register, professional trade journals, agency or program handbooks, the Catalog of Federal Domestic Assistance, or any other appropriate means of solicitation, as early as practicable each fiscal year. It will contain information sufficient to enable all eligible applicants to prepare rangeland research grant proposals and will be as complete as possible with respect to:

(1) Descriptions of specific research program areas which the Department proposes to support during the fiscal year involved, including anticipated funds to be awarded;

(2) Deadline dates for having proposal packages postmarked;

(3) Name and address where proposals should be mailed;

(4) Number of copies to be submitted;

(5) Forms required to be used when submitting proposals; and

(6) Special requirements.

(b) *Application kit.* An Application Kit will be made available to any potential grant applicant who requests a copy. This kit contains required forms, certifications, and instructions applicable to the submission of grant proposals.

(c) *Format for research grant proposals.* Unless otherwise stated in the specific program solicitation, the following format applies:

(1) *Application for funding.* All research grant proposals submitted by eligible applicants should contain an Application for Funding form, which must be signed by the proposing principal investigator(s) and endorsed by the cognizant authorized organizational representative who possesses the necessary authority to commit the applicant's time and other relevant resources.

(2) *Title of Project.* The title of the project must be brief (80-character maximum), yet represent the major thrust of the research. This title will be used to provide information to the Congress and other interested parties who may be unfamiliar with scientific terms; therefore, highly technical words or phraseology should be avoided where possible. In addition, phrases such as ''investigation of'' or ''research on'' should not be used.

(3) *Objectives.* Clear, concise, complete, enumerated, and logically arranged statement(s) of the specific aims of the research must be included in all proposals.

(4) *Procedures.* The procedures of methodology to be applied to the proposed research plan should be stated explicitly. This section should include but not necessarily be limited to:

(i) A description of the proposed investigations and/or experiments in the sequence in which it is planned to carry them out;

(ii) Techniques to be employed, including their feasibility;

(iii) Kinds of results expected;

(iv) Means by which data will be analyzed or interpreted;

(v) Pitfalls which might be encountered; and

(vi) Limitations to proposed procedures.

(5) *Justification.* This section of the grant proposal should describe:

(i) The importance of the problem to the needs of the Department and to the Nation, including estimates of the magnitude of the problem;

(ii) The importance of starting the work during the current fiscal year; and

(iii) Reasons for having the work performed by the proposing organization.

(6) *Literature review.* A summary of pertinent publications with emphasis on their relationship to the research should be provided and should include all important and recent publications. The citations should be accurate, complete, written in acceptable journal format, and be appended to the proposal.

(7) *Current research.* The relevancy of the proposed research to ongoing and, as yet, unpublished research of both the applicant and any other institutions should be described.

(8) *Facilities and equipment.* All facilities, including laboratories, that are available for use or assignment to the proposed research project during the requested period of support, should be reported and described. Any materials, procedures, situations, or activities, whether or nor directly related to a particular phase of the proposed research, and which may be hazardous to personnel, must be explained fully, along with an outline of precautions to be exercised. All items of major instrumentation available for use or assignment to the proposed research project during the requested period of support should be itemized. In addition, items of nonexpendable equipment needed to conduct and bring the proposed project to a successful conclusion should be listed.

(9) *Collaborative arrangements.* If the proposed project requires collaboration with other research scientists, corporations, organizations, agencies, or entities, such collaboration must be explained fully and justified. Evidence should be provided to assure peer reviewers that the collaborators involved agree with the arrangements. It should be specifically indicated whether or not such collaborative arrangements have the potential for any conflict(s) of interest. Proposals which indicate collaborative involvements must state which applicant is to receive any resulting grant award, since only one eligible applicant, as provided in § 3401.3 may be the recipient of a research project grant under one proposal.

(10) *Research timetable.* The applicant should outline all important research phases as a function of time, year by year.

(11) *Personnel support.* All personnel who will be involved in the research effort must be identified clearly. For each scientist involved, the following should be included:

(i) An estimate of the time commitments necessary;

(ii) Vitae of the principal investigator(s), senior associate(s), and other professional personnel to assist reviewers in evaluating the competence and experience of the project staff. This section should include curricula vitae of *all* key persons who will work on the proposed research project, whether or not Federal funds are sought for their support. The vitae are to be no more than two pages each in length, excluding publication listings; and

(iii) A chronological listing of the most representative publications during

the past five years shall be provided for each professional project member of whom a curriculum vitae appears under this section. Authors should be listed in the same order as they appear on each paper cited, along with the title and complete reference as these usually appear in journals.

(12) *Budget.* A detailed budget is required for each year of requested support. In addition, a summary budget is required detailing requested support for the overall project period. A copy of the form which must be used for this purpose, along with instructions for completion, is included in the Application Kit identified under § 3401.6(b) and may be reproduced as needed by applicants. Funds may be requested under any of the categories listed, provided that the item or service for which support is requested is allowable under applicable Federal cost principles and can be identified as necessary for successful conduct of the proposed research project. As stated in § 3401.4 each grant recipient must match the Federal funds expended on a research project based on a formula of 50 percent Federal and 50 percent non-Federal funding. As stated in § 3401.5, indirect costs and tuition remission costs are not allowable costs for purposes of this program and , thus, may not be used to satisfy the matching requirement set forth in § 3401.4.

(13) *Research involving special considerations.* A number of situations encountered in the conduct of research require special information and supporting documentation before funding can be approved for the project. If such situations are anticipated, the proposal must so indicate. It is expected that a significant number of rangeland grant proposals will involve the following:

(i) *Recombinant DNA molecules.* All key personnel identified in a proposal and all endorsing officials of a proposed performing entity are required to comply with the guidelines establishing by the National Institutes of Health entitled, ''Guidelines for Research Involving Recombinant DNA Molecules,'' as revised. The Application Kit, identified above in § 3401.6(b), contains a form which is suitable for such certification of compliance. In the event a project involving recombinant DNA and RNA molecules results in a grant award, the Institutional Biosafety Committee must approve the research before CSREES funds will be released.

(ii) *Human subjects at risk.* Responsibility for safeguarding the rights and welfare of human subjects used in any research project supported with grant funds provided by the Department rests with the performing entity. Regulations have been issued by the Department under 7 CFR Part 1c, Protection of Human Subjects. In the event that a project involving human subjects at risk is recommended for award, the applicant will be required to submit a statement certifying that the research plan has been reviewed and approved by the Institutional Review Board at the proposing organization or institution. The Application Kit, identified above in § 3401.6(b), contains a form which is suitable for such certification. In the event a project involving human subjects results in a grant award, funds will be released only after the Institutional Committee has approved the project.

(iii) *Laboratory animal care.* The responsibility for the humane care and treatment of any laboratory animal, which has the same meaning as ''animal'' in section 2(g) of the Animal Welfare Act of 1966, as amended (7 U.S.C. 2132(g)), used in any research project supported with Rangeland Research Grant Program funds rests with the performing organization. In this regard, all key personnel identified in a proposal and all endorsing officials of the proposed performing entity are required to comply with the applicable provisions of the Animal Welfare Act of 1966, as amended (7 U.S.C. 2131 *et seq.*) and the regulations promulgated thereunder by the Secretary of Agriculture in 9 CFR Parts 1, 2, 3, and 4. In the event that a project involving the use of a laboratory animal is recommended for award, the applicant will be required to submit a statement certifying such compliance. The Application Kit, identified above in § 3401.6(b), contains a form which is suitable for such certification. In the event a project involving the use of living vertebrate animals results in a grant award, funds will be released only after the Institutional Animal Care and Use Committee has approved the project.

(14) *Current and pending support.* All proposals must list any other current public or private research support, in addition to the proposed project, to which key personnel listed in the proposal under consideration have committed portions of their time, whether or not salary support for the person(s) involved is included in the budgets of the various projects. This section must also contain analogous information for all projects underway and for pending research proposals which are currently being considered by, or which will be submitted in the near future to, other possible sponsors, including other Departmental programs or agencies. Concurrent submission of identical or similar projects to other possible sponsors will not prejudice its review or evaluation by the Administrator or experts or consultants engaged by the Administrator for this purpose. The Application Kit, identified above in § 3401.6(b), contains a form which is suitable for listing current and pending support.

(15) *Additions to project description.* Each project description is expected by the Administrator, members of peer review groups, and the relevant program staff to be complete in itself. However, in those instances in which the inclusion of additional information is necessary, the number of copies submitted should match the number of copies of the application requested in the annual solicitation of proposals as indicated in § 3401.6(a)(4). Each set of such materials must be identified with the title of the research project as it appears in the Application for Funding and the name(s) of the principal investigator(s). Examples of additional materials may include photographs which do not reproduce well, reprints, and other pertinent materials which are deemed to be unsuitable for inclusion in the proposal.

(16) *National Environmental Policy Act.* As outlined in CSREES's implementing regulations of the National Environmental Policy Act of 1969 (NEPA) at 7 CFR Part 3407, environmental data or documentation for the proposed project is to be provided to CSREES in order to assist CSREES in carrying out its responsibilities under NEPA. These responsibilities include determining whether the project requires an Environmental Assessment or an Environmental Impact Statement or whether it can be excluded from this requirement on the basis of several categorical exclusions listed in 7 CFR part 3407. In this regard, the applicant should review the categories defined for exclusion to ascertain whether the proposed project may fall within one or more of the exclusions, and should indicate if it does so on the National Environmental Policy Act Exclusions Form (Form CSREES—1234) provided in the Application Kit. Even though the applicant considers that a proposed project may fall within a categorical exclusion, CSREES may determine that an Environmental Assessment or an Environmental Impact Statement is necessary for a proposed project should substantial controversy on environmental grounds exist or if other extraordinary conditions or circumstances are present that may

cause such activity to have a significant environmental effect.

(17) *Organizational management information.* Specific management information relating to an applicant shall be submitted on an *one-time basis prior to the award of a research project grant* identified under this Part if such information has not been provided previously under this or another program for which the sponsoring agency is responsible. Copies of forms recommended for use in fulfilling the requirements contained in this section will be provided by the agency specified in this Part once a research project grant has been recommended for funding.

§ 3401.7 Evaluation and disposition of applications.

(a) *Evaluation.* All proposals received from eligible applicants in accordance with eligible research problem or program areas and deadlines established in the applicable request for proposals shall be evaluated by the Administrator through such officers, employees, and others as the Administrator determines are particularly qualified in the areas of research represented by particular projects. To assist in equitably and objectively evaluating proposals and to obtain the best possible balance of viewpoints, the Administrator may solicit the advice of peer scientists, *ad hoc* reviewers, or others who are recognized specialists in the research program areas covered by the applications received. Specific evaluations will be based upon the criteria established in Subpart B of this Part, § 3401.17, unless CSREES determines that different criteria are necessary for the proper evaluation of proposals in one or more specific program areas, and announces such criteria and their relative importance in the annual program solicitation. The overriding purpose of such evaluations is to provide information upon which the Administrator can make informed judgments in selecting proposals for ultimate support. Incomplete, unclear, or poorly organized applications will work to the detriment of applicants during the peer evaluation process. To ensure a comprehensive evaluation, all applications should be written with the care and thoroughness accorded papers for publication.

(b) *Disposition.* On the basis of the Administrator's evaluation of an application in accordance with paragraph (a) of this section, the Administrator will approve using currently available funds, defer support due to lack of funds or a need for further evaluations, or disapprove support for the proposed project in whole or in part. With respect to approved projects, the Administrator will determine the project period (subject to extension as provided in § 3401.9(c)) during which the project may be supported. Any deferral or disapproval of an application will not preclude its reconsideration or a reapplication during subsequent fiscal years.

§ 3401.8 Grant awards.

(a) *General.* Within the limit of funds available for such purpose, the awarding official shall make research project grants to those responsible, eligible applicants whose proposals are judged most meritorious in the announced program areas under the evaluation criteria and procedures set forth in this Part. The date specified by the Administrator as the beginning of the project period shall be no later than September 30 of the Federal fiscal year in which the project is approved for support and funds are appropriated for such purpose, unless otherwise permitted by law. All funds granted under this Part shall be expended solely for the purpose for which the funds are granted in accordance with the approved application and budget, the regulations of this Part, the terms and conditions of the award, the applicable Federal cost principles, and the Department's ''Uniform Federal Assistance Regulations'' (Parts 3015 and 3019 of this Title).

(b) *Grant award document and notice of grant award.*

(1) *Grant award documents.* The grant award document shall include at a minimum the following:

(i) Legal name and address of performing organization or institution to whom the Administrator has awarded a rangeland research project grant under the terms of this Part;

(ii) Title of project;

(iii) Name(s) and address(es) of principal investigator(s) chosen to direct and control approved activities;

(iv) Identifying grant number assigned by the Department;

(v) Project period, which specifies how long the Department intends to support the effort without requiring recompetition for funds;

(vi) Total amount of Departmental financial assistance approved by the Administrator during the project period;

(vii) Legal authority(ies) under which the research project grant is awarded to accomplish the purpose of the law;

(viii) Approved budget plan for categorizing allocable project funds to accomplish the stated purpose of the research project grant award; and

(ix) Other information or provisions deemed necessary by the Department to carry out its granting activities or to accomplish the purpose of a particular research project grant.

(2) *Notice of grant award.* The notice of grant award, in the form of a letter, will be prepared and will provide pertinent instructions or information to the grantee that is not included in the grant award document.

(c) *Categories of grant instruments.* The major categories of grant instruments by which the Department may provide support are as follows:

(1) *Standard grant.* This is a grant instrument by which the Department agrees to support a specified level of research effort for a predetermined project period without the announced intention of providing additional support at a future date. This type of research project grant is approved on the basis of peer review and recommendation and is funded for the entire project period at the time of award.

(2) *Renewal grant.* This is a document by which the Department agrees to provide additional funding under a standard grant as specified in paragraph (c)(1) of this section for a project period beyond that approved in an original or amended award, provided that the cumulative period does not exceed the statutory limitation. When a renewal application is submitted, it should include a summary of progress to date under the previous grant instrument. Such a renewal shall be based upon new application, *de novo* peer review and staff evaluation, new recommendation and approval, and a new award instrument.

(3) *Continuation grant.* This is a grant instrument by which the Department agrees to support a specified level of effort for a predetermined period of time with a statement of intention to provide additional support at a future date, provided that performance has been satisfactory, appropriations are available for this purpose, and continued support would be in the best interests of the Federal government and the public. It involves a long-term research project that is considered by peer reviewers and Departmental officers to have an unusually high degree of scientific merit, the results of which are expected to have a significant impact on the productivity of the Nation's rangelands, and it supports the efforts of experienced scientists with records of outstanding research accomplishments. This kind of document normally will be awarded for an initial one-year period and any subsequent continuation research project grants also will be awarded in one-year increments, but in no case may the cumulative period of

the project exceed the statutory limit. The award of a continuation research project grant to fund an initial or succeeding budget period does not constitute an obligation to fund any subsequent budget period. A grantee must submit a separate application for continued support for each subsequent fiscal year. Requests for such continued support must be submitted in duplicate at least three months prior to the expiration date of the budget period currently being funded. Such requests must include: an interim progress report detailing all work performed to date; an Application for Funding; a proposed budget for the enuring period, including an estimate of funds anticipated to remain unobligated at the end of the current budget period; and current information regarding other extramural support for senior personnel. Decisions regarding continued support and the actual funding levels of such support in future years usually will be made administratively after consideration of such factors as the grantee's progress and management practices and within the context of available funds. Since initial peer reviews were based upon the full term and scope of the original rangeland research application for funding, additional evaluations of this type generally are not required prior to successive years' support. However, in unusual cases (e.g., when the nature of the project or key personnel change or when the amount of future support requested substantially exceeds the application for funding originally reviewed and approved), additional reviews may be required prior to approval of continued funding.

(4) *Supplemental grant.* This is an instrument by which the Department agrees to provide small amounts of additional funding under a standard, renewal, or continuation grant as specified in paragraphs (c)(1), (c)(2), and (c)(3) of this section and may involve a short-term (usually six months or less) extension of the project period beyond that approved in an original or amended award, but in no case may the cumulative period of the project, including short term extensions, exceed the statutory time limitation. A supplement is awarded only if required to assure adequate completion of the original scope of work and if there is sufficient justification of need to warrant such action. A request of this nature normally does not require additional peer review.

(d) *Obligation of the Federal government.* Neither the approval of any application nor the award of any research project grant shall commit or obligate the United States in any way to make any renewal, supplemental, continuation, or other award with respect to any approved application or portion of an approved application.

§ 3401.9 Use of funds; changes.

(a) *Delegation of fiscal responsibility.* The grantee may not delegate or transfer in whole or in part, to another person, institution, or organization the responsibility for use or expenditure of grant funds.

(b) *Change in project plans.*

(1) The permissible changes by the grantee, principal investigator(s), or other key project personnel in the approved research project grant shall be limited to changes in methodology, techniques, or other aspects of the project to expedite achievement of the projects' approved goals. If the grantee or the principal investigator(s) is uncertain as to whether a change complies with this provision, the question shall be referred to the Administrator for a final determination.

(2) Changes in approved goals, or objectives, shall be requested by the grantee and approved in writing by the Department prior to effecting such changes. In no event shall requests for such changes be approved which are outside the scope of the original approved project.

(3) Changes in approved project leadership or the replacement or reassignment of other key project personnel shall be requested by the grantee and approved in writing by the Department prior to effecting such changes.

(4) Transfers of actual performance of the substantive programmatic work in whole or in part and provisions for payment of funds, whether or not Federal funds are involved, shall be requested by the grantee and approved in writing by the Department prior to effecting such changes, except as may be allowed in the terms and conditions of a grant award.

(c) *Changes in project period.* The project period determined pursuant to § 3401.7(b) may be extended by the Administrator without additional financial support, for such additional period(s) as the Administrator determines may be necessary to complete, or fulfill the purposes of, an approved project. Any extension, when combined with the originally approved or amended project period, shall be conditioned upon prior request by the grantee and approval in writing by the Department, unless prescribed otherwise in the terms and conditions of a grant award.

(d) *Changes in approved budget.* The terms and conditions of a grant will prescribe circumstances under which written Departmental approval will be requested and obtained prior to instituting changes in an approved budget.

§ 3401.10 Other Federal statutes and regulations that apply.

Several other Federal statutes and/or regulations apply to grant proposals considered for review or to research project grants awarded under this Part. These include but are not limited to:

7 CFR Part 1c—USDA implementation of the Federal Policy for the Protection of Human Subjects;

7 CFR Part 1.1—USDA implementation of Freedom of Information Act:

7 CFR Part 3—USDA implementation of OMB Circular A–129 regarding debt collection;

7 CFR Part 15, Subpart A—USDA implementation of Title VI of the Civil Rights Act of 1964;

7 CFR Part 3015—USDA Uniform Federal Assistance Regulations, implementing OMB directives (i.e., Circular Nos. A–110, A–21, and A–122) and incorporating provisions of 31 U.S.C. 6301–6308 (formerly, the Federal Grant and Cooperative Agreement Act of 1977), as well as general policy requirements applicable to recipients of Departmental financial assistance;

7 CFR Part 3017, as amended—USDA implementation of Governmentwide Debarment and Suspension (Nonprocurement) and Governmentwide Requirements for Drug-Free Workplace (Grants);

7 CFR Part 3018—USDA implementation of New Restrictions on Lobbying. Imposes new prohibitions and requirements for disclosure and certification related to lobbying on recipients of Federal contracts, grants, cooperative agreements, and loans;

7 CFR Part 3019—USDA Uniform Administrative Requirements for Grants and Agreements with Institutions of Higher Education, Hospitals, and Other Non-profit Organizations;

7 CFR Part 3051—Audits of Institutions of Higher Education and Other Nonprofit Institutions;

7 CFR Part 3407—CSREES procedures to implement the National Environmental Policy Act;

29 U.S.C. 794 (section 504, Rehabilitation Act of 1973) and 7 CFR Part 15B (USDA implementation of statute)—prohibiting discrimination based upon physical or mental handicap in Federally assisted programs; and

35 U.S.C. 200 *et seq.*—Bayh-Dole Act, controlling allocation of rights to inventions made by employees of small business firms and domestic nonprofit organizations, including universities, in Federally assisted programs (implementing regulations are contained in 37 CFR Part 401).

§ 3401.11 Other conditions.

The Administrator may, with respect to any research project grant or to any class of awards, impose additional

conditions prior to or at the time of any award when, in the Administrator's judgment, such conditions are necessary to assure or protect advancement of the approved project, the interests of the public, or the conservation of grant funds.

Subpart B—Scientific Peer Review of Research Applications for Funding

§ 3401.12 Establishment and operation of peer review groups.

Subject to § 3401.7, the Administrator will adopt procedures for the conduct of peer reviews and the formulation of recommendations under § 3401.16.

§ 3401.13 Composition of peer review groups.

Peer review group members will be selected based upon their training or experience in relevant scientific or technical fields, taking into account the following factors:

(a) The level of formal scientific or technical education by the individual;

(b) The extent to which the individual has engaged in relevant research, the capacities in which the individual has done so (e.g., principal investigator, assistant), and the quality of such research;

(c) Professional recognition as reflected by awards and other honors received from scientific and professional organizations outside of the Department;

(d) The need of the group to include within its membership experts from various areas of specialization within relevant scientific or technical fields;

(e) The need of the group to include within its membership experts from a variety of organizational types (e.g., universities, industry, private consultant(s)) and geographic locations; and

(f) The need of the group to maintain a balanced membership, e.g., minority and female representation and an equitable age distribution.

§ 3401.14 Conflicts of interest.

Members of peer review groups covered by this Part are subject to relevant provisions contained in Title 18 of the United States Code relating to criminal activity, Department regulations governing employee responsibilities and conduct (Part O of this title), and Executive Order 11222 (3 CFR, 1964–1965 Comp., p. 306), as amended.

§ 3401.15 Availability of information.

Information regarding the peer review process will be made available to the extent permitted under the Freedom of Information Act (5 U.S.C. 552), the Privacy Act (5 U.S.C. 552a.), and implementing Departmental regulations (Part 1 of this title).

§ 3401.16 Proposal review.

(a) All research Applications for Funding will be acknowledged. Prior to technical examination, a preliminary review will be made for responsiveness to the request for proposals (e.g., relationship of application to research program area). Proposals that do not fall within the guidelines as stated in the annual request for proposals will be eliminated from competition and will be returned to the applicant. Proposals whose budgets exceed the maximum allowable amount for a particular program area as announced in the request for proposals may be considered as lying outside the guidelines.

(b) All applications will be reviewed carefully by the Administrator, qualified officers or employees of the Department, the respective merit review panel, and ad hoc reviewers, as required. Written comments will be solicited from ad hoc reviewers, when required, and individual written comments and in-depth discussions will be provided by peer review group members prior to recommending applications for funding. Applications will be ranked and support levels recommended within the limitation of total available funding for each research program area as announced in the applicable request for proposals.

(c) Except to the extent otherwise provided by law, such recommendations are advisory only and are not binding on program officers or on the awarding official.

§ 3401.17 Review criteria.

(a) Federally funded research supported under these provisions shall be designed to, among other things, accomplish one or more of the following purposes:

(1) improve management of rangelands as an integrated system and/or watershed;

(2) remedy unstable or unsatisfactory rangeland conditions;

(3) increase revegetation and/or rehabilitation of rangelands;

(4) examine the health of rangelands; and

(5) define economic parameters associated with rangelands.

(b) In carrying out its review under § 3401.16, the peer review panel will use the following form upon which the evaluation criteria to be used are enumerated, unless, pursuant to § 3401.7(a), different evaluation criteria are specified in the annual solicitation of proposals for a particular program:

Peer Panel Scoring Form

Proposal Identification No. _____

Institution and Project Title _____

I. Basic Requirement:

Proposal falls within guidelines? _____ Yes _____ No. If no, explain why proposal does not meet guidelines under comment section of this form.

II. Selection Criteria:

	Score 1–10	Weight factor	Score X weight factor	Comments
1. Overall scientific and technical quality of proposal		10		
2. Scientific and technical quality of the approach		10		
Relevance and importance of proposed research to solution of specific areas of inquiry		6		
4. Feasibility of attaining objectives; adequacy of professional training and experience, facilities and equipment		5		

Score _____

Summary Comments _____

(c) Proposals satisfactorily meeting the guidelines will be evaluated and scored by the peer review panel for each criterion utilizing a scale of 1 through 10. A score of one (1) will be considered low and a score of ten (10) will be considered high for each selection criterion. A weighted factor is used for each criterion.

Done at Washington, D.C., this 23rd day of May, 1996.

B.H. Robinson

Administrator, Cooperative State Research, Education, and Extension Service.

[FR Doc. 96–13607 Filed 5–30–96; 8:45 am]

BILLING CODE 3410–22–M

federal register

Friday
May 31, 1996

Part V

Department of Education

Postsecondary Education: Updates to Tables Used in the Need Analysis Methodology for the 1997–98 Award Year; Notice

DEPARTMENT OF EDUCATION

Federal Pell Grant, Federal Perkins Loan, Federal Work-Study, Federal Supplemental Educational Opportunity Grant, Federal Family Education Loan, and William D. Ford Federal Direct Loan Programs; Updates to Tables Used in the Need Analysis Methodology for the 1997–98 Award Year

AGENCY: Department of Education.

ACTION: Notice.

SUMMARY: The Secretary of Education announces the annual updates to the tables included in the need analysis methodology that will be used to calculate expected family contributions for the 1997–98 award year under the Federal Pell Grant, campus-based (Federal Perkins Loan, Federal Work-Study, and Federal Supplemental Educational Opportunity Grant), Federal Family Education Loan and William D. Ford Federal Direct Loan programs. These programs are known collectively as the Title IV, HEA programs. The Secretary takes this action under the authority of sections 477 and 478 of the Higher Education Act of 1965, as amended (HEA).

FOR FURTHER INFORMATION CONTACT: Ms. Edith Bell, Program Specialist, General Provisions Branch, Policy Development Division, U.S. Department of Education, 600 Independence Avenue, S.W. (Room 3053, ROB–3), Washington, D.C. 20202–5444, telephone (202) 708–7888. Deaf and hearing impaired individuals may call the Federal Information Relay Service at 1–800–877–8339 between 8 a.m. and 8 p.m., Eastern time, Monday through Friday.

SUPPLEMENTARY INFORMATION: The need analysis methodology, referred to as the ''Federal Needs Analysis Methodology,'' is set forth in Subpart F of Title IV of the HEA. It is used to determine a student's eligibility for assistance under the Title IV, HEA programs.

Federal Needs Analysis Methodology

Part F of Title IV of the HEA specifies the criteria, data elements, calculations, and tables used in the computation of expected family contributions for the Title IV, HEA programs. Section 478 of Part F requires the Secretary to adjust annually for inflation four of the tables included in Part F: the Income Protection Allowance, the Adjusted Net Worth of a Business or Farm, the Education Savings and Asset Protection Allowance, and the Assessment Schedules and Rates. The inflation changes are based, in general, upon the reported annual inflation increase set forth in the Consumer Price Index for All Urban Consumers that is issued by the United States Department of Labor.

For award year 1997–98, the Secretary is charged with updating the tables for income protection allowances, adjusted net worth of a business or farm, and the assessment schedules and rates to account for inflation that took place in calendar year 1996. However, the Secretary must publish these updated tables by June 1, 1996. Therefore, the Secretary must update the tables based upon an estimate of the increase in the Consumer Price Index for All Urban Consumers for that period.

The Secretary estimates that the Consumer Price Index for All Urban Consumers will rise 3.3 percent during calendar year 1996. In making this estimate, the Secretary assumed that the rate of increase for calendar year 1996 will be the same as that reported for calendar year 1995.

The table in section 1 reflects the changes in the income protection allowances. This change reflects a consumer price increase of 3.3 percent rounded to the nearest $10.

The table in section 2 reflects the changes in the adjusted net worth of a farm or business. This change reflects a consumer price increase of 3.3 percent rounded to the nearest $5,000.

The table in section 3 reflects the changes in the education savings and asset protection allowance. This change reflects a consumer price increase of 3.3 percent rounded to the nearest $100.

The table in section 4 reflects the changes in the assessment schedules and rates. This change reflects a consumer price increase of 3.3 percent rounded to the nearest $100.

Section 477(b)(5) of the HEA requires the Secretary to increase the amount specified for the Employment Expense Allowance to account for inflation based upon increases in the Bureau of Labor Statistics budget of the marginal costs for a two-earner compared to a one-earner family for meals away from home, apparel and upkeep, transportation, and housekeeping services. Therefore, the table in section 5 reflects that change.

The table in section 6, statutory allowances for State and other taxes, has not been revised, but is included for informational purposes.

The following sections set forth the above described tables.

1. Income Protection Allowance

This statutory allowance represents the amount of reasonable living expenses that would be associated with the maintenance of an individual or family. The allowance is offset against the family's income and varies by family size and family members in college. The income protection allowances for parents of dependent students and independent students with dependents other than a spouse for the award year 1997–98 are:

Family size (including student)	Number in college				
	1	2	3	4	5
2	$11,750	$9,740			
3	14,630	12,630	$10,620		
4	18,070	16,060	14,060	$12,050	
5	21,320	19,310	17,310	15,300	$13,300
6	24,940	22,930	20,930	18,920	16,920

For each additional family member add $2,810.
For each additional college student subtract $2,000.

2. Adjusted Net Worth (NW) of a Business or Farm

A portion of the full net value of a farm or business is excluded from the calculation of an expected contribution since: (1) the income produced from such assets is already assessed in another part of the formula; and (2) the formula protects a portion of the value of the assets. The portion of these assets included in the contribution calculation is computed according to the following schedule. This statutory schedule is used for parents of dependent students, independent students without dependents other than a spouse, and independent students with dependents other than a spouse.

If the net worth of a business or farm is—	Then the adjusted net worth is:
Less than $1	$0.
$1 to $85,000	$0 + 40% of NW.
$85,001 to $250,000	$34,000 + 50% of NW over $85,000.
$250,001 to $420,000	$116,500 + 60% of NW over $250,000.
$420,001 or more	$218,500 + 100% of NW over $420,000.

3. Education Savings and Asset Protection Allowance

This statutory allowance protects a portion of net worth (assets less debts) from being considered available for postsecondary educational expenses. There are three asset protection allowance tables—one for parents of dependent students, one for independent students without dependents other than a spouse, and one for independent students with dependents other than a spouse.

DEPENDENT STUDENTS

If the age of the older parent is	And there are	
	Two parents	One parent
	then the education savings and asset protection allowance is—	
25 or less	.....	.....
26	2,400	1,700
27	4,700	3,300
28	7,100	5,000
29	9,500	6,600
30	11,800	8,300
31	14,200	10,000
32	16,600	11,600
33	18,900	13,300
34	21,300	14,900
35	23,700	16,600
36	26,000	18,300
37	28,400	19,900
38	30,800	21,600
39	33,100	23,200
40	35,500	24,900
41	36,400	25,400
42	37,300	26,000
43	38,300	26,500
44	39,300	27,100
45	40,300	27,800
46	41,300	28,300
47	42,400	29,000
48	43,400	29,700
49	44,500	30,400
50	45,900	31,200
51	47,100	31,900
52	48,300	32,700
53	49,800	33,500
54	51,300	34,300
55	52,600	35,100
56	54,200	36,100
57	55,900	36,900
58	57,600	38,000
59	59,600	39,100
60	61,400	40,000
61	63,200	41,100
62	65,400	42,300

DEPENDENT STUDENTS—Continued

If the age of the older parent is	And there are	
	Two parents	One parent
63	67,700	43,500
64	70,000	44,900
65 and over	72,400	46,100

INDEPENDENT STUDENTS WITHOUT DEPENDENTS OTHER THAN A SPOUSE

If the age of the student is	And the student is	
	Married	Single
	then the education savings and asset protection allowance is—	
25 or less	.....	.....
26	2,400	1,700
27	4,700	3,300
28	7,100	5,000
29	9,500	6,600
30	11,800	8,300
31	14,200	10,000
32	16,600	11,600
33	18,900	13,300
34	21,300	14,900
35	23,700	16,600
36	26,000	18,300
37	28,400	19,900
38	30,800	21,600
39	33,100	23,200
40	35,500	24,900
41	36,400	25,400
42	37,300	26,000
43	38,300	26,500
44	39,300	27,100
45	40,300	27,800
46	41,300	28,300
47	42,400	29,000
48	43,400	29,700
49	44,500	30,400
50	45,900	31,200
51	47,100	31,900
52	48,300	32,700
53	49,800	33,500
54	51,300	34,300
55	52,600	35,100
56	54,200	36,100
57	55,900	36,900
58	57,600	38,000
59	59,600	39,100
60	61,400	40,000
61	63,200	41,100
62	65,400	42,300
63	67,700	43,500
64	70,000	44,900
65 and over	72,400	46,100

INDEPENDENT STUDENTS WITH DEPENDENTS OTHER THAN A SPOUSE

If the age of the student is	And the student is	
	Married	Single
	then the education savings and asset protection allowance is—	
25 or less	.....	.....

INDEPENDENT STUDENTS WITH DEPENDENTS OTHER THAN A SPOUSE—Continued

If the age of the student is	And the student is	
	Married	Single
26	2,400	1,700
27	4,700	3,300
28	7,100	5,000
29	9,500	6,600
30	11,800	8,300
31	14,200	10,000
32	16,600	11,600
33	18,900	13,300
34	21,300	14,900
35	23,700	16,600
36	26,000	18,300
37	28,400	19,900
38	30,800	21,600
39	33,100	23,200
40	35,500	24,900
41	36,400	25,400
42	37,300	26,000
43	38,300	26,500
44	39,300	27,100
45	40,300	27,800
46	41,300	28,300
47	42,400	29,000
48	43,400	29,700
49	44,500	30,400
50	45,900	31,200
51	47,100	31,900
52	48,300	32,700
53	49,800	33,500
54	51,300	34,300
55	52,600	35,100
56	54,200	36,100
57	55,900	36,900
58	57,600	38,000
59	59,600	39,100
60	61,400	40,000
61	63,200	41,100
62	65,400	42,300
63	67,700	43,500
64	70,000	44,900
65 and over	72,400	46,100

4. Assessment Schedules and Rates

Two separate assessment schedules—one for dependent students, and one for independent students with dependents other than a spouse—are used in determining the expected family contribution toward educational expenses from family financial resources.

For dependent students, the expected parental contribution is derived from an assessment of the parents' adjusted available income (AAI). For independent students with dependents other than a spouse, the expected contribution is derived from an assessment of the family's AAI. The AAI represents a measure of financial strength which considers both income and assets. The statutory assessment schedules are as follows:

DEPENDENT STUDENTS

If AAI is—	Then the contribution is—
Less than −$3,409 ...	−$750.
−$3,409 to $10,500	22% of AAI.
$10,501 to $13,200 ...	$2,310 + 25% of AAI over $10,500.
$13,201 to $15,900 ...	$2,985 + 29% of AAI over $13,200.
$15,901 to $18,500 ...	$3,768 + 34% of AAI over $15,900.
$18,501 to $21,200 ...	$4,652 + 40% of AAI over $18,500.
$21,201 or more	$5,732 + 47% of AAI over $21,200.

INDEPENDENT STUDENTS WITH DEPENDENTS OTHER THAN A SPOUSE

If AAI is—	Then the contribution is—
Less than −$3,409 ...	−$750.
−$3,409 to $10,500	22% of AAI.
$10,501 to $13,200 ...	$2,310 + 25% of AAI over $10,500.

INDEPENDENT STUDENTS WITH DEPENDENTS OTHER THAN A SPOUSE—Continued

If AAI is—	Then the contribution is—
$13,201 to $15,900 ...	$2,985 + 29% of AAI over $13,200.
$15,901 to $18,500 ...	$3,768 + 34% of AAI over $15,900.
$18,501 to $21,200 ...	$4,652 + 40% of AAI over $18,500.
$21,201 or more	$5,732 + 47% of AAI over $21,200.

5. Employment Expense Allowance

This allowance for employment-related expenses, which is used for the parents of dependent students and for married independent students with dependents, recognizes additional expenses incurred by working spouses and single-parent households. The allowance is based upon the marginal differences in costs for a two-earner family compared to a one-earner family for meals away from home, apparel and upkeep, transportation, and housekeeping services.

The employment expense allowance for parents of dependent students, married independent students without dependents other than a spouse, and independent students with dependents other than a spouse is the lesser of $2,700 or 35 percent of earned income.

6. Allowance for State and Other Taxes

The statutory allowance for state and other taxes protects a portion of the parents' and student's income from being considered available for postsecondary education expenses. There are four tables for state and other taxes, one each for parents of dependent students, dependent students, independent students without dependents other than a spouse, and independent students with dependents other than a spouse.

PARENTS OF DEPENDENT STUDENTS

If parents' state or territory of residence is	And parents' total income is—	
	Less than $15,000 or	$15,000 or more
	then the percentage is—	
Wyoming, Tennessee, Nevada, Alaska, Texas	3	2
Louisiana, Florida, Washington, South Dakota	4	3
Alabama, Mississippi	5	4
North Dakota, Illinois, Connecticut, New Mexico, Missouri, West Virginia, Arizona, Indiana, Oklahoma, Arkansas	6	5
New Hampshire, Pennsylvania, Colorado, Georgia, Kansas, Kentucky, Idaho	7	6
North Carolina, Virginia, Delaware, South Carolina, Ohio, Utah, Nebraska, Montana, California, New Jersey, Iowa, Vermont, Hawaii	8	7
Massachusetts, Rhode Island, Michigan, Minnesota, Maine, Maryland	9	8
District of Columbia, Wisconsin, Oregon	10	9
New York	11	10
Other	4	3

INDEPENDENT STUDENTS WITH DEPENDENTS OTHER THAN A SPOUSE

If student's state or territory of residence is	And student's total income is—	
	Less than $15,000 or	$15,000 or more
	then the percentage is—	
Wyoming, Tennessee, Nevada, Alaska, Texas	3	2
Louisiana, Florida, Washington, South Dakota	4	3
Alabama, Mississippi	5	4
North Dakota, Illinois, Connecticut, New Mexico, Missouri, West Virginia, Arizona, Indiana, Oklahoma, Arkansas	6	5
New Hampshire, Pennsylvania, Colorado, Georgia, Kansas, Kentucky, Idaho	7	6
North Carolina, Virginia, Delaware, South Carolina, Ohio, Utah, Nebraska, Montana, California, New Jersey, Iowa, Vermont, Hawaii	8	7
Massachusetts, Rhode Island, Michigan, Minnesota, Maine, Maryland	9	8
District of Columbia, Wisconsin, Oregon	10	9
New York	11	10
Other	4	3

DEPENDENT STUDENTS

If student's state or territory of residence is	The percentage is—
Alaska, Texas, South Dakota, Wyoming, Washington, Tennessee, Nevada	0
Florida, New Hampshire	1
Connecticut, Louisiana, Illinois, North Dakota	2
Mississippi, Arizona, Alabama, Pennsylvania, New Jersey, Missouri	3
Nebraska, Indiana, Colorado, New Mexico, Oklahoma, Kansas, West Virginia, Rhode Island, Virginia, Georgia, Arkansas, Vermont, Michigan	4
Montana, Idaho, Utah, Kentucky, Massachusetts, California, North Carolina, South Carolina, Ohio, Iowa, Delaware, Maine, Wisconsin	5
Oregon, Maryland, Minnesota, Hawaii	6
District of Columbia, New York	7
Other	2
	2

INDEPENDENT STUDENTS WITHOUT DEPENDENTS OTHER THAN A SPOUSE

If student's state or territory of residence is	The percentage is—
Alaska, Texas, South Dakota, Wyoming, Washington, Tennessee, Nevada	0
Florida, New Hampshire	1
Connecticut, Louisiana, Illinois, North Dakota	2
Mississippi, Arizona, Alabama, Pennsylvania, New Jersey, Missouri	3
Nebraska, Indiana, Colorado, New Mexico, Oklahoma, Kansas, West Virginia, Rhode Island, Virginia, Georgia, Arkansas, Vermont, Michigan	4
Montana, Idaho, Utah, Kentucky, Massachusetts, California, North Carolina, South Carolina, Ohio, Iowa, Delaware, Maine, Wisconsin	5
Oregon, Maryland, Minnesota, Hawaii	6
District of Columbia, New York	7
Other	2

Dated: May 29, 1996.

David A. Longanecker,

Assistant Secretary for Postsecondary Education.

(Catalog of Federal Domestic Assistance Numbers: 84.007 Federal Supplemental Educational Opportunity Grant; 84.032 Federal Family Education Loan Program; 84.033 Federal Work-Study Program; 84.038 Federal Perkins Loan Program; 84.063 Federal Pell Grant Program; 84.268 William D. Ford Federal Direct Loan Program)

[FR Doc. 96–13799 Filed 5–30–96; 8:45 am]

BILLING CODE 4000–01–P

Reader Aids

Federal Register

Vol. 61, No. 106

Friday, May 31, 1996

CUSTOMER SERVICE AND INFORMATION

Federal Register/Code of Federal Regulations

General Information, indexes and other finding aids	**202–523–5227**
Public inspection announcement line	**523–5215**

Laws

Public Laws Update Services (numbers, dates, etc.)	**523–6641**
For additional information	**523–5227**

Presidential Documents

Executive orders and proclamations	**523–5227**
The United States Government Manual	**523–5227**

Other Services

Electronic and on-line services (voice)	**523–4534**
Privacy Act Compilation	**523–3187**
TDD for the hearing impaired	**523–5229**

ELECTRONIC BULLETIN BOARD

Free Electronic Bulletin Board service for Public Law numbers, Federal Register finding aids, and list of documents on public inspection. **202–275–0920**

FAX-ON-DEMAND

You may access our Fax-On-Demand service. You only need a fax machine and there is no charge for the service except for long distance telephone charges the user may incur. The list of documents on public inspection and the daily Federal Register's table of contents are available using this service. The document numbers are 7050-Public Inspection list and 7051-Table of Contents list. The public inspection list will be updated immediately for documents filed on an emergency basis.

NOTE: YOU WILL ONLY GET A LISTING OF DOCUMENTS ON FILE AND NOT THE ACTUAL DOCUMENT. Documents on public inspection may be viewed and copied in our office located at 800 North Capitol Street, N.W., Suite 700. The Fax-On-Demand telephone number is: **301–713–6905**

FEDERAL REGISTER PAGES AND DATES, MAY

19155–19502 1
19503–19804 2
19805–20116 3
20117–20418 6
20419–20700 7
20701–21046 8
21047–21360 9
21361–21946 10
21947–24204 13
24205–24432 14
24433–24664 15
24665–24874 16
24875–25134 17
25135–25388 20
25389–25548 21
25549–25774 22
25775–26068 23
26069–26422 24
26423–26768 28
26769–27000 29
27001–27242 30
27243–27766 31

CFR PARTS AFFECTED DURING MAY

At the end of each month, the Office of the Federal Register publishes separately a List of CFR Sections Affected (LSA), which lists parts and sections affected by documents published since the revision date of each title.

3 CFR

Proclamations:
6889 19503
6890 19803
6891 20419
6892 21045
6893 21047
6894 24661
6895 24663
6896 25129
6897 25765
6898 25767
6899 25769
6900 26067
6901 26769

Executive Orders:
11216 (See EO 13002) 24665
11593 (See EO 13006) 26071
12072 (See EO 13006) 26071
12808 (See Notice of May 24, 1996) 26773
12810 (See Notice of May 24, 1996) 26773
12831 (See Notice of May 24, 1996) 26773
12846 (See Notice of May 24, 1996) 26773
12934 (See Notice of May 24, 1996) 26773
13001 21943
13002 24665
13003 25131
13004 25771
13005 26069
13006 26071
13007 26771

Administrative Orders:
Memorandums:
April 1, 1996 26017
April 26, 1996 19505
April 26, 1996 24667
April 26, 1996 24877
April 28, 1996 19507
May 10, 1996 26033
Presidential Determinations:
No. 96–7 of Dec. 27, 1996 (See Notice of May 24, 1996) 26773
No. 96–20 of April 1, 1996 26019
No. 96–21 of April 4, 1996 26021
No. 96–22 of April 18, 1996 26027
No. 96–23 of April 30, 1996 26029
No. 96–24 of May 9, 1996 26031
No. 96–25 of May 16, 1996 27001

4 CFR

Proposed Rules:
21 19205

5 CFR

Ch. LXIX 20117
300 19509
410 21947
532 .....20701, 27243
591 27243
831 21953
842 21953
890 25775

7 CFR

2 25775
28 19511
51 20702
52 25549
53 19155
54 19155
225 25550
226 25550
272 19155
273 19155
301 .....20877, 26423
319 24433
457 27244
703 26423
800 24669
810 24669
900 20717
915 19512
916 .....19160, 26073
917 .....19160, 26073
925 27245
946 20119
947 27247
953 27248
956 20121
958 27250
959 24877
979 20718
980 25551
985 20122
1002 20719
1004 20719
1007 20124
1160 27003
1280 .....19514, 21049, 21053
1485 24205
1755 26073
1841 21361
1843 21361
1845 21361
1903 21361
1945 21361
1980 21361
2054 21361
3401 27752
3403 25366

Proposed Rules:
51....24247
457....27315
911....20754, 27027
915....27027
924....20756
930....26956
944....20754, 20756
958....20188
1005....19861
1007....19861
1011....19861
1046....19861
1160....20759

8 CFR

3....19976, 21065, 21228
100....25777
242....19976, 21065, 21228

9 CFR

50....25135
77....25135
78....19976
130....20421, 25513
Proposed Rules:
92....20189, 20190, 21389, 26849
93....20190, 26849
94....20190, 26849, 26850
95....20190, 26849
96....20190, 26849
98....20190, 26849
301....19564
304....19578
308....19578
317....19564, 19578
318....19564, 19578
319....19578, 26470
320....19564
381....19564, 19578, 26470

10 CFR

20....24669
30....24669
40....24669
61....24669
70....24669
72....24669
Proposed Rules:
26....21105, 24731
52....27027
72....24249
150....26852

11 CFR

110....24533

12 CFR

5....19524
19....20330
20....19524
25....21362
28....19524
205....19662, 19678
211....24439
220....20386
228....21362
229....25389
327....26078, 26083
250....19805
263....20338
308....20344
345....21362
509....20350
563e....21362
614....20125
Proposed Rules:
207....20399
215....19863
220....20399
221....20399
226....26126
230....26470
245....26471
330....25596
344....26135
614....24907

13 CFR

Proposed Rules:
121....20191

14 CFR

21....20696
25....24208, 24213, 25778, 26775
27....21904
29....21894, 21904
31....20877
39....19540, 19807, 19808, 19809, 19811, 19813, 19815, 20125, 20127, 20616, 20636, 20638, 20639, 20641, 20643, 20644, 20646, 20668, 20669, 20671, 20672, 20674, 20676, 20677, 20679, 20681, 20682, 21066, 21068, 21070, 21071, 24206, 24214, 24216, 24218, 24220, 24675, 24684, 24686, 24688, 24690, 24691, 24878, 24881, 24883, 24884, 25557, 15558, 26089, 23090, 23091, 26424, 26425, 26426, 26427, 26429, 26776, 26778, 26780, 27251, 27253
43....19498
71....19541, 19542, 19816, 19817, 21364, 21365, 21953, 24222, 24223, 26094, 26431, 26434, 26781, 27004
73....20127, 26095, 26434
91....24430
97....25138, 25139, 25141, 25780, 25781, 25783
159....19784
205....19164
323....19164
385....19166
Proposed Rules:
29....20760
39....20192, 20194, 20762, 20764, 21146, 21979, 21980, 21982, 24250, 25417, 25418, 25598, 26853, 27028, 27030, 27322
71....19590, 19591, 19592, 19593, 21910, 21984, 24533, 25157, 25600, 26473
91....24582, 26855, 26856
121....21149, 24582, 24533, 26036
127....24582
135....24582, 26036
158....25420

15 CFR

24....26095
754....27255
758....27255
762....27255
902....19171, 21926, 26435
981....21073
2011....26783
Proposed Rules:
946....19594
2301....27230

16 CFR

19....27222
23....27178
405....25560
1500....19818, 26096
1507....26096
Proposed Rules:
23....27224
254....19869
1210....20503

17 CFR

1....19177, 19830
3....20127, 26253
5....19830
10....21954
31....19830
140....21954
200....20721, 25652
228....25652
229....25652
230....21356, 25652
231....24644
232....25652
239....25652
240....21354, 25652
241....24644
249....21354
270....25652
271....24644
274....25652
276....24644
Proposed Rules:
1....19869
156....19869
230....25601
240....25601
250....25601
270....25601
275....25601

18 CFR

35....21940
37....21737
385....21940
1300....20117
Proposed Rules:
35....21847
161....19211
250....19211
284....19211, 19832
346....19878

19 CFR

10....19834, 24887
12....24888
103....19835
122....25777
145....24888
161....24888
Proposed Rules:
101....19834

20 CFR

200....25390
345....20070
601....19982
617....19982
626....19982
658....19982
702....19982

21 CFR

2....25390
5....24223
101....20096, 21074
172....26786, 27004
173....25392, 27004
175....27004
176....27004
177....27004
178....27004
180....27004
181....27004
189....27004
201....20096
310....25142
341....25142
369....20096
500....19542
501....20096
510....21075, 24440
520....24441, 24443
522....21075, 24440, 25784
556....24440, 24441
558....21075, 24443, 24694
582....19542
589....19542
600....24227
601....24227
740....20096
801....20096
Proposed Rules:
Ch. I....21392, 26473
25....19476
101....25421
102....19220
130....19220
131....19220
133....19220
135....19220
136....19220
137....19220
139....19220
145....19220
146....19220
150....19220
152....19220
155....19220
156....19220
158....19220
160....19220
161....19220
163....19220
164....19220
165....19220
166....19220
168....19220
169....19220
210....20104
211....20104
328....21392
530....25118
589....24253
801....26140

22 CFR

126....19841
514....20437
Proposed Rules:
602....27031
608....26474

24 CFR

0....19187

201 19788
206 26982
234 26982
290 19188
585 25124
941 19708
970 19708
982 27162
983 27162

Proposed Rules:

206 21910
888 20982
901 20358
3500 21394

25 CFR

Proposed Rules:

144 24731
250 19600
291 25604
525 21394

26 CFR

1 ....19188, 19189, 19544, 19546, 21366, 21955, 27005, 27258
31 27007
301 ....19189, 26788
602 ....19189, 26788, 27007

Proposed Rules:

1 ....20503, 20766, 20767, 21985, 21988, 27036
31 20767
32 20767
35a 20767
301 ....20503, 21989

27 CFR

1 ....20721, 26096
2 26096
3 26096
4 20721
7 20721
16 20721
19 20721
20 20721
21 20721
22 20721
24 ....20721, 21076
25 20721
53 20721
55 20721
71 20721
170 20721
178 20721
179 20721
194 20721
197 20721
200 20721
250 20721
251 20721
252 20721
270 20721
275 20721
285 20721
290 20721
296 20721

28 CFR

58 24889
501 25120
550 25120

Proposed Rules:

90 24526
100 21396

29 CFR

1 19982
2 19982
4 19982
5 19982
6 19982
7 19982
8 19982
22 19982
24 19982
32 19982
96 19982
500 24694
504 19982
507 19982
508 19982
530 19982
1601 21370
1910 ....19547, 21228
1915 26322
1978 19982
2619 ....21228, 24444, 25513
2627 24694
2676 24444

Proposed Rules:

Ch. XIV 20768
4 19770
102 25158

30 CFR

75 ....20877, 26441
203 27263
250 25147
906 26792
913 26801
914 26443
925 ....26445, 26454
931 26825
936 26461
946 26836

Proposed Rules:

Ch. II 21977, 25160
202 25421
206 25421
211 25421
256 24466
901 20768
902 20768
904 ....19881, 20768
913 20768
914 20768
915 20768
916 20768
917 20768
918 20768
920 20768
925 26477
926 26477
931 26477
934 ....25425, 26477
935 26477
936 ....25426, 26477
938 26477
943 26477
944 26477
946 ....19885, 26477
948 26477
950 ....20773, 26477

31 CFR

12 25396
224 26839
361 20437
411 27280
585 24696

Proposed Rules:

356 25164

32 CFR

95 26102
324 25561

33 CFR

52 24233
100 ....19192, 20132, 21959, 21960, 21961, 21962, 25149, 26102, 26103, 26104
110 25149
117 ....24235, 25149
165 ....19192, 19841, 21963, 24697, 24698, 24699, 24701, 24892, 26105, 26840
334 26107
401 19548

Proposed Rules:

67 26857
100 25835
165 25838

34 CFR

361 24390
685 24446

Proposed Rules:

100 ....20196, 21998, 21999, 22001
117 22002
154 20084
155 20084

36 CFR

13 27008
242 25785
292 20726
1228 ....19552, 24702

Proposed Rules:

7 20775
100 19220
117 19223
701 25839

37 CFR

Proposed Rules:

Ch. II 20197, 22004, 27322
1 ....19224, 20877

38 CFR

1 ....27281, 27282
2 ....20133, 20437, 26107
3 ....20438, 20726, 25787
4 ....20438, 20440
9 20134
17 ....21964, 24236
19 20447
20 20447
21 ....20727, 24237, 26107

Proposed Rules:

3 24910
17 25428

39 CFR

3001 24447

Proposed Rules:

233 21404

40 CFR

9 27132
50 25566
52 ....19193, 19555, 20136, 20139, 20142, 20145, 20147, 20453, 20455, 20458, 20730, 20732, 24239, 24457, 24702, 24706, 24709, 24712, 25789, 25791, 27019
55 25149
60 ....20734, 21080
63 ....21370, 25397, 27132
70 ....20150, 24457, 24715
75 25580
80 20736
81 ....20458, 21372, 24239, 24242
82 25585
89 20738
90 20738
110 25149
117 25149
123 20972
131 20686
141 24354
167 25151
180 ....19842, 19845, 19847, 19849, 19850, 19852, 19854, 19855, 20742, 20743, 20745, 21378, 24893, 25152, 26117, 26118, 26841, 26843
185 25153
271 ....25794, 25796, 25799
300 ....20473, 24720, 24894
355 20473
421 24242

Proposed Rules:

Ch. I 19432
51 19231
52 ....19233, 19601, 20199, 20200, 20201, 20504, 21405, 21412, 24467, 24737, 24738, 25840, 25841, 27038
55 25173
60 27038
61 20775
63 ....19887, 21414, 27038
70 ....20202, 26145
80 20779
81 ....19233, 21415
82 25604
89 20738
90 20738
136 26149
141 26857
142 26857
148 21418
170 19889
180 ....19233, 20780, 20781, 24738, 24911, 26149, 26856, 26859, 26861
185 ....20780, 26861
186 ....10780, 20781, 24911, 26861
260 27038
261 ....21418, 25175, 27038
264 27038
265 27038
266 27038
268 21418
270 27038
271 ....21418, 27038
300 ....19889, 20202, 20785, 21422, 22004, 22006, 24261

41 CFR

50–203 19982
60–1 ....19982, 25516
60–30 19982
60–60 25516
60–250 ....19366, 19982
60–741 ....19336, 19982

301–4 25802

42 CFR

405 19722
412 21969
417 27282
486 19722

Proposed Rules:

84 ..... 24740, 25513
412 27444
413 27444
489 27444

43 CFR

11 20560

44 CFR

61 19197
62 24462
64 ..... 19857, 25802
65 ..... 25400, 25402, 25403
67 25405
206 19197

Proposed Rules:

67 ..... 25429, 25435

45 CFR

Proposed Rules:

1311 24467
2400 25612

46 CFR

Ch. I 24464
10 19858
15 ..... 19858, 25984
26 25984
30 25272
31 ..... 25272, 25984
32 ..... 25272, 25984
33 25272
34 25984
35 ..... 25272, 25984
38 25984
54 25984
56 25984
58 25984
61 25984
70 25272
71 25272
72 25984
75 25272
76 25984
77 ..... 25272, 25984
78 ..... 25272, 25984
90 25272
91 25272
92 25984
94 25272
95 25984
96 ..... 25272, 25984
97 ..... 25272, 25984
107 25272
108 ..... 25272, 25984
109 ..... 25272, 25984
114 20556
116 20556
117 20556
118 20556
119 20556
120 20556
121 20556
122 20556
125 25272
133 25272
153 25984
160 25984
162 25984
164 25984
167 ..... 25272, 25984
168 ..... 25272, 25984
169 25984
170 ..... 20556, 24464
171 24464
173 ..... 20556, 24464
175 20556
176 20556
177 20556
178 20556
179 20556
180 20556
181 20556
182 20556
183 20556
185 20556
188 25272
189 ..... 25272, 25984
190 25984
192 25272
193 25984
195 25272
196 ..... 25272, 25984
199 25272
298 21302
381 24895
403 21081
404 21081

47 CFR

Ch. I 26464
0 ..... 25804, 26464, 26465
1 26670
2 26670
3 20155
21 ..... 25594, 26670
22 21380
24 ..... 25807, 25808, 25810
64 ..... 20746, 24897
73 ..... 20490, 20747, 21384, 21385, 21973, 24262, 24263, 24465, 25594
80 ..... 25804, 26120, 26465
90 ..... 21380, 25810
94 26670
97 21385
101 26670

Proposed Rules:

Ch. I 22008, 26152, 26483, 26864
0 21151
1 ..... 19236, 20505, 24743, 25183
2 19236
15 ..... 24473, 24749
21 19236
22 24470
24 24470
36 27323
64 ..... 25184, 26152
69 27323
73 ..... 19601, 20206, 20207, 20505, 20789, 21425, 24262, 24263, 25183, 25841, 26491
80 21151
90 25185
94 19236

48 CFR

Ch. 1 24263
209 25408
231 21973
242 25409
243 25408
570 24720
801 20491
803 20491
804 20491
805 20491
806 20491
808 20491
810 20491
812 20491
813 20491
815 20491
816 20491
820 20491
822 20491
828 20491
833 20491
834 20491
836 20491
837 20491
846 20491
871 20493
904 21975
906 21975
911 21975
912 21975
913 21975
915 21975
919 21975
925 21975
926 21975
933 21975
950 21975
952 21975
970 21975
2401 19468
2402 19468
2404 19468
2405 19468
2406 19468
2409 19468
2411 19468
2412 19468
2413 19468
2414 19468
2415 19468
2416 19468
2417 19468
2419 19468
2420 19468
2426 19468
2428 19468
2429 19468
2432 19468
2434 19468
2436 19468
2437 19468
2442 19468
2452 19468
2453 19468

Proposed Rules:

Ch. 1 ..... 22010, 26496
Ch. 2 22010
42 26766
52 ..... 24473, 26766
901 19891
905 19891
906 19891
908 19891
915 19891
916 19891
917 19891
922 19891
928 19891
932 19891
933 19891
935 19891
936 19891
942 19891
945 19891
952 19891
971 19891
1515 25440
1552 25440

49 CFR

18 21386
37 ..... 25409, 26467
38 ..... 25409, 26467
90 21386
107 21084
171 ..... 21084, 25940, 26750, 27166
172 ..... 20747, 27166
173 ..... 20747, 21084, 25940, 26750, 27166
174 20747
176 ..... 20747, 27166
177 27166
178 ..... 21084, 25940, 27166
180 27166
192 26121
193 26121
195 ..... 24244, 26121
212 26124
228 20494
397 20496
501 26468
533 25595
564 20497
571 ..... 19201, 19202, 19560, 19561, 20170, 20172, 20497, 26845, 27023, 27288
604 19562
609 19562
639 25088
1039 26846
1051 19859
1053 19859
1164 21387
1311 21387
1312 19859
1330 024722

Proposed Rules:

171 ..... 24904, 26253
173 ..... 24904, 26253
180 ..... 24904, 26253
195 27323
219 21149
382 21149
537 22010
571 ..... 19602, 24263, 24265, 26872, 27039, 27325
653 21149
654 21149
1002 20877
1100 19236
1101 19236
1102 19236
1103 19236
1104 19236
1105 19236
1106 19236
1107 19236
1108 19236
1109 19236
1110 19236
1111 19236
1112 19236
1113 19236
1114 19236
1115 19236
1116 19236

1117 19236
1118 19236
1119 19236
1120 19236
1121 19236
1122 19236
1123 19236
1124 19236
1125 19236
1126 19236
1127 19236
1128 19236
1129 19236
1130 19236
1131 19236
1132 19236
1133 19236
1134 19236
1135 19236
1136 19236
1137 19236
1138 19236
1139 19236
1140 19236
1141 19236
1142 19236
1143 19236
1144 19236
1145 19236
1146 19236
1147 19236
1148 19236
1149 19236
1185 22014
1300 21153
1305 24474
1312 19902

50 CFR

17 ....24722, 25813
91 25155
100 25785
216 21926
222 21926
253 19171
255 19171
301 27025
611 26435
620 ....20175, 26435
630 27304
641 25833
651 ....26847, 27710
658 24728
661 ....20175, 26125
663 21102
672 ....19976, 21104, 24729, 27308, 27312
675 ....19976, 24730, 24905, 25595, 27312
678 21978

Proposed Rules:

16 24267
17 ....19237, 21426, 25618
229 27042
246 25443
280 25443
281 25443
282 25443
298 25443
299 25443
300 25443
301 25443
371 25443
380 25443
600 19390
601 19390
602 19390
603 19390
605 19390
611 19390
619 19390
620 19390
621 19390
625 20506
628 20789
641 24267
649 20207
650 ....20207, 21431
651 20207
655 25185
652 19604
672 ....24475, 24750
673 ....19902, 21431
675 ....24475, 24750
676 24475
695 25443

REMINDERS

The rules and proposed rules in this list were editorially compiled as an aid to Federal Register users. Inclusion or exclusion from this list has no legal significance.

RULES GOING INTO EFFECT TODAY

AGRICULTURE DEPARTMENT

Cooperative State Research, Education, and Extension Service

Grants:
- Rangeland research program; administrative provisions; published 5-31-96

AGRICULTURE DEPARTMENT

Food and Consumer Service

Food stamp program:
- Federal, State, or local welfare assistance payments; noncompliance penalties; published 5-1-96

COMMODITY FUTURES TRADING COMMISSION

Commodity Exchange Act:
- Futures commission merchants and introducing brokers; early warning reporting requirements, minimum financial requirements, etc.; published 5-1-96

ENVIRONMENTAL PROTECTION AGENCY

Air quality implementation plans; approval and promulgation; various States:
- Pennsylvania; published 5-1-96

FEDERAL COMMUNICATIONS COMMISSION

Radio services, special:
- Maritime services--
  - Global maritime distress and safety system; radiotelegraph carriage requirement eliminated; published 5-2-96

HEALTH AND HUMAN SERVICES DEPARTMENT

Health Care Financing Administration

Medicare and medicaid:
- Organ procurement organizations; conditions of coverage; published 5-2-96

HOUSING AND URBAN DEVELOPMENT DEPARTMENT

Acquisition regulations:
- Miscellaneous amendments; published 5-1-96

TRANSPORTATION DEPARTMENT

Economic and procedural regulations:
- Aircraft accident liability insurance; terminations, suspensions, and reductions of service; Federal regulatory reform; published 5-1-96

Organization, functions, and authority delegations:
- Staff assignments and review of action under assignments; Federal regulatory reform; published 5-1-96

TRANSPORTATION DEPARTMENT

Federal Aviation Administration

Aircraft:
- Maintenance and preventative maintenance; published 5-1-96

TRANSPORTATION DEPARTMENT

National Highway Traffic Safety Administration

Motor vehicle safety standards:
- Fuel system integrity--
  - Compressed natural gas fuel containers; published 5-1-96
  - Light vehicles, schoolbuses and fuel spillage/barrier crash tests; published 5-1-96

TREASURY DEPARTMENT

Internal Revenue Service

Income taxes:
- Enterprise zone facility bonds; published 5-31-96

TREASURY DEPARTMENT

Secret Service

Counterfeit Deterrence Act:
- Color illustrations of U.S. currency; published 5-31-96

VETERANS AFFAIRS DEPARTMENT

National cemeteries; miscellaneous amendments; published 5-31-96

VA publications; use of words and statements denoting gender; removal; published 5-31-96

COMMENTS DUE NEXT WEEK

AGRICULTURE DEPARTMENT

Agricultural Marketing Service

Avocados grown in Florida; comments due by 6-3-96; published 5-2-96

Onions (sweet) grown in Washington and Oregon; comments due by 6-5-96; published 5-6-96

Onions grown in--
- Idaho et al.; comments due by 6-5-96; published 5-6-96

Potatoes (Irish) grown in--
- Washington; comments due by 6-5-96; published 5-6-96

Spearmint oil produced in Far West; comments due by 6-5-96; published 5-6-96

AGRICULTURE DEPARTMENT

Animal and Plant Health Inspection Service

Exportation and importation of animals and animal products:
- Garbage that can introduce diseases or pests of livestock, poultry, or plants; disposal by cruise ships in landfills at Alaskan ports; comments due by 6-4-96; published 4-5-96
- Hog cholera and swine vesicular disease; disease status change--
  - Netherlands; comments due by 6-3-96; published 4-4-96
- Horses; permanent private quarantine facilities; comments due by 6-3-96; published 5-6-96

Interstate transportation of animals and animal products (quarantine):
- Tuberculosis in cervids; identification requirements; comments due by 6-3-96; published 4-4-96

COMMERCE DEPARTMENT

National Oceanic and Atmospheric Administration

Fishery management councils; hearings:
- New England; comments due by 6-4-96; published 5-10-96

COMMERCE DEPARTMENT

Patent and Trademark Office

Patent cases:
- Fee revisions; comments due by 6-5-96; published 5-1-96

DEFENSE DEPARTMENT

Federal Acquisition Regulation (FAR):
- Management oversight of service contracting; comments due by 6-3-96; published 4-3-96

ENERGY DEPARTMENT

Energy Efficiency and Renewable Energy Office

Consumer products; energy conservation program:
- Clothes washers; test procedures, etc.; comments due by 6-6-96; published 4-22-96

ENERGY DEPARTMENT

Federal Energy Regulatory Commission

Oil pipelines:
- Cost-of-service filing requirements; comments due by 6-3-96; published 5-3-96

ENVIRONMENTAL PROTECTION AGENCY

Air pollution control; new motor vehicles and engines:
- Urban buses (1993 and earlier model years); retrofit/rebuild requirements; equipment certification--
  - Detroit Diesel Corp.; comments due by 6-3-96; published 4-17-96

Air quality implementation plans; approval and promulgation; various States:
- California; comments due by 6-3-96; published 5-2-96
- Illinois; comments due by 6-5-96; published 5-6-96
- Ohio; comments due by 6-5-96; published 5-6-96
- Utah; comments due by 6-5-96; published 5-6-96

Clean Air Act:
- Consumer products; national volatile organic compound emission standards; comments due by 6-3-96; published 4-2-96
- State operating permits programs--
  - Rhode Island; comments due by 6-5-96; published 5-6-96
  - Rhode Island; comments due by 6-5-96; published 5-6-96

Pesticides; tolerances in food, animal feeds, and raw agricultural commodities:
- Chloroxuron, etc.; comments due by 6-3-96; published 4-3-96

Superfund program:
- National oil and hazardous substances contingency plan--
  - National priorities list update; comments due by 6-5-96; published 5-6-96
  - National priority list update; comments due by 6-3-96; published 5-3-96

FEDERAL COMMUNICATIONS COMMISSION

Common carrier services:

Wireless services; cellular spectrum priority access; national security/ emergency preparedness responsiveness; rulemaking petition; comments due by 6-3-96; published 4-26-96

FEDERAL TRADE COMMISSION

Magnuson-Moss Warranty Act interpretations, etc.; comments due by 6-3-96; published 4-3-96

GENERAL SERVICES ADMINISTRATION

Federal Acquisition Regulation (FAR):

Management oversight of service contracting; comments due by 6-3-96; published 4-3-96

HEALTH AND HUMAN SERVICES DEPARTMENT

Food and Drug Administration

Color additives:

Color additive lakes; safe use in food, drugs, and cosmetics; permanent listing; comments due by 6-3-96; published 3-4-96

GRAS or prior-sanctioned ingredients:

Meat and poultry products; substances approved; comment period reopening; comments due by 6-3-96; published 4-3-96

Human drugs:

Antiflatulent products (OTC); monograph amendment; comments due by 6-3-96; published 3-5-96

Medical devices:

Ophthalmic devices--

Neodymium:yttrium: aluminum: garnet (Nd:YAG) laser; reclassification from Class III to Class II; comments due by 6-6-96; published 3-8-96

HOUSING AND URBAN DEVELOPMENT DEPARTMENT

National Environmental Policy Act; implementation; comments due by 6-4-96; published 4-5-96

INTERIOR DEPARTMENT

Land Management Bureau

Marginal gas producers; production incentives through royalty reductions; comment request; comments due by 6-3-96; published 3-5-96

INTERIOR DEPARTMENT

Fish and Wildlife Service

Endangered and threatened species:

Northern spotted owl; comments due by 6-3-96; published 4-8-96

Endangered Species Convention:

River otters taken in Missouri; export; comments due by 6-3-96; published 4-2-96

INTERIOR DEPARTMENT

Surface Mining Reclamation and Enforcement Office

Federal lands program:

State-Federal cooperative agreements; Federal regulatory review; comments due by 6-3-96; published 4-4-96

Permanent program and abandoned mine land reclamation plan submissions:

Arkansas; comments due by 6-3-96; published 5-3-96

Virginia; comments due by 6-3-96; published 5-3-96

JUSTICE DEPARTMENT

Persons of Japanese ancestry; redress provisions; comments due by 6-6-96; published 4-22-96

LABOR DEPARTMENT

Pension and Welfare Benefits Administration

Employee Retirement Income Security Act:

Interpretive bulletins and regulations removed; comments due by 6-3-96; published 4-3-96

NATIONAL AERONAUTICS AND SPACE ADMINISTRATION

Federal Acquisition Regulation (FAR):

Management oversight of service contracting; comments due by 6-3-96; published 4-3-96

SECURITIES AND EXCHANGE COMMISSION

Investment companies:

Acquisition of securities during existence of underwriting syndicate; comments due by 6-3-96; published 3-27-96

TRANSPORTATION DEPARTMENT

Coast Guard

Ports and waterways safety:

Tampa Bay, Hillsborough Bay and approaches, FL: safety zone; comments due by 6-3-96; published 4-2-96

Regattas and marine parades:

First Coast Guard District fireworks displays; comments due by 6-6-96; published 5-23-96

TRANSPORTATION DEPARTMENT

Federal Aviation Administration

Airports:

National Capital airports; CFR part removed; comments due by 6-3-96; published 5-2-96

Airworthiness directives:

de Havilland; comments due by 6-3-96; published 4-23-96

Empressa Brasileira de Aeronautica, S.A.; comments due by 6-3-96; published 4-23-96

McDonnell Douglas; comments due by 6-4-96; published 4-10-96

Class E airspace; comments due by 6-3-96; published 4-9-96

TRANSPORTATION DEPARTMENT

Federal Highway Administration

Motor carrier safety standards:

Parts and accessories necessary for safe operation--

Television receivers and data display units; comments due by 6-3-96; published 4-3-96

TRANSPORTATION DEPARTMENT

National Highway Traffic Safety Administration

National Driver Register transition procedures; comments due by 6-3-96; published 4-17-96

TRANSPORTATION DEPARTMENT

Surface Transportation Board

Interlocking rail officers and directors; authorization; comments due by 6-3-96; published 5-13-96

Tariffs and schedules:

Pipeline common carriage; change of rates and other service terms; disclosure and notice; comments due by 6-4-96; published 5-15-96

TREASURY DEPARTMENT

Internal Revenue Service

Employment taxes and collection of income taxes at source:

Federal Unemployment Tax Act (FUTA) and Federal Insurance Contributions Act (FICA); taxation of amounts under employee benefit plans

Hearing; comments due by 6-3-96; published 5-8-96

Income taxes:

Foreign corporations--

Determination of interest expense deduction and branch profits tax; comments due by 6-6-96; published 3-8-96

Loans to plan participants or beneficiaries; hearing; comments due by 6-7-96; published 5-8-96

LIST OF PUBLIC LAWS

Note: No public bills which have become law were received by the Office of the Federal Register for inclusion in today's **List of Public Laws**.

Last List May 30, 1996